SYSTEM DESCRIPTION

1. GENERAL

(a) The air conditioning system has the following control.

Control	Outline
Neural Network Control	This control is capable of effecting complex control by artificially simulating the information processing method of nervous system of living organisms in order to establish a complex input / output relationship that is similar to a human brain.
Outlet Air Temperature Control	In compliance with the temperature set at the temperature control switch, the neural network control calculates the outlet temperature based on the input signals from various sensors.
	The temperature setting for the driver and front passenger is controlled independently in order to provide a separate vehicle interior temperature for the right and left side. Thus, air conditioning that accommodates the occupants' preferences has been realized.
Blower control	Controls the blower motor in accordance with ten airflow volume that has been calculated by the neural network control based on the input signals from various sensors.
Air Outlet Control	Automatically switches the outlets in accordance with the airflow volume that has been calculated by the neural network control based on the input signals from various sensors.
	In accordance with the engine coolant temperature, outside air temperature, amount of sunlight, required blower outlet temperature, and vehicle speed conditions, this control automatically switches the blower outlet to the FOO / DEF mode to prevent window from becoming fogged when the outside air temperature is low.
Air Inlet Control	automatically controls the air inlet control damper in accordance with the calculation of the required outlet air temperature.
	Drives the servomotor (for air inlet) according to the operation of the air inlet control switch and fixes the dampers in the FRESH or RECIRC position.
Compressor Control	This control turns OFF the magnetic clutch of the A/C compressor when the blower motor is turned OFF at the time, the engine coolant temperature is below a predetermined value, an abnormal refrigerant pressure has been input, or the discharge temperature of the evaporator is below a predetermined value.
	Air Conditioning ECU turns the compressor off if the engine coolant temperature becomes abnormally hot (115°C (239°F) or above) when driving under a high load.
Rear Window Defogger Control	Switches the rear defogger and outside rear mirror heaters*1, on for 15 minutes when the rear defogger switch is switched on. Switches them off if the switch is pressed while they are operating.
Outer Temperature Indicator Control	Based on the signals from the ambient temperature sensor, this control calculates the outside temperature, witch is then corrected in Air Conditioning ECU, and show in the multi information display*2 / multi display*3.
Self- Diagnosis	The DTC (Diagnostic Trouble Code) is stored in the memory when the air Conditioning ECU detects an abnormality in the air conditioning system.

*1: Models with XLS and Limited Grades
*2: Models without Multi Display
*3: Models with Multi Display

2. MODE POSITION AND DAMPER OPERATION

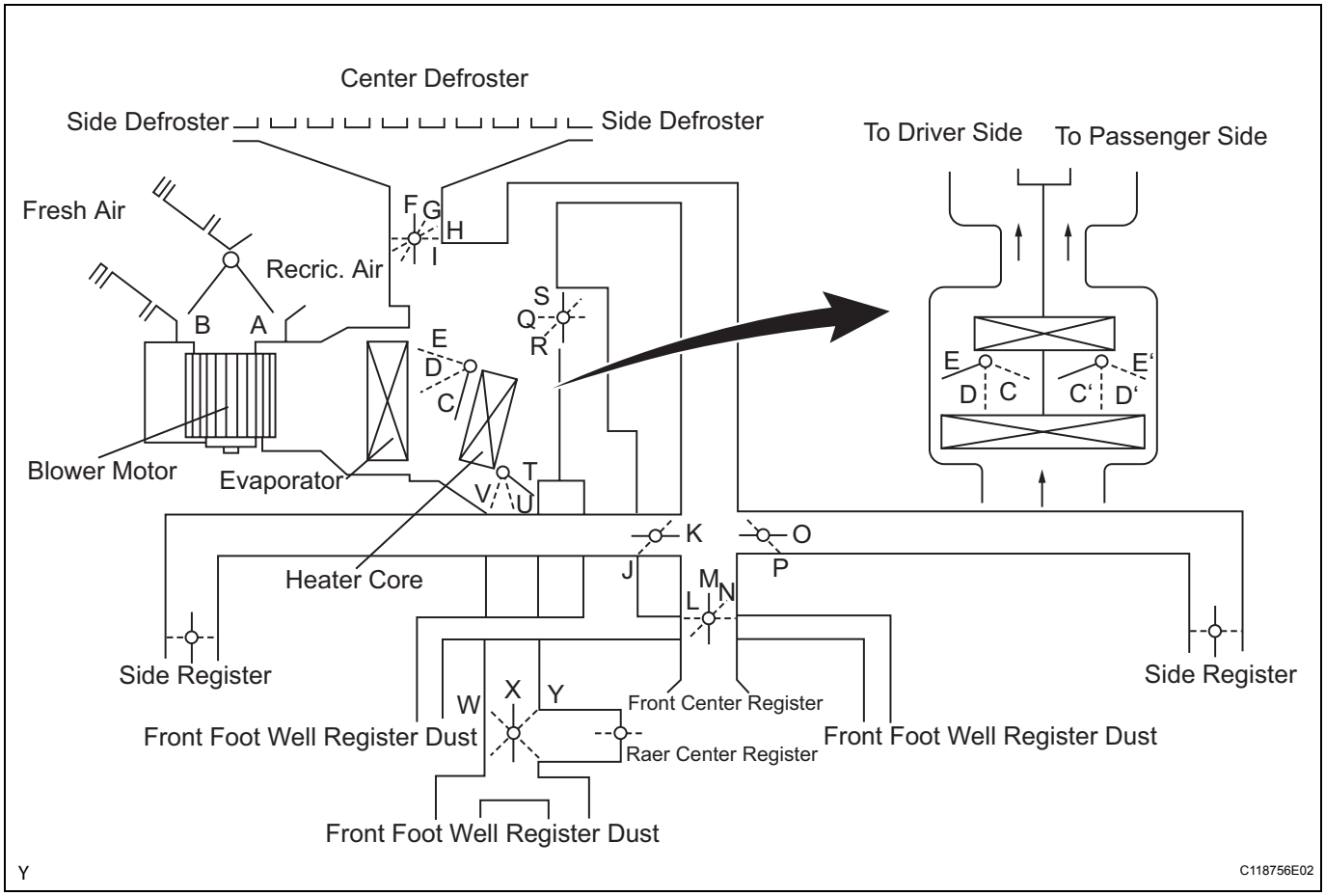

Function of Main Damper

Control Damper	Operation Position	Damper Position	Operation
Air Inlet Control Damper	FRESH	A	Brings in fresh air.
	RECIRCULATION	B	Recirculates internal air.
Air Mix Control Damper	MAX COLD to MAX HOT Temp. Setting	C - D - E (C' - D' - E') T - U - V	Varies the mixture ratio of the fresh air and the recirculation air in order to regulate the temperature continuously from HOT to COLD.
Mode Control Damper	DEF	F, K, L, P, S	Defrosts the windshield through the center defroster, side defroster, side registers and rear center register.
	FOOT/DEF	G, K, L, P, Q, X	Defrosts the windshield through the center defroster, side defrosters, side registers, and rear center register, while air is also blown out from the front and rear foot well register ducts.
	FOOT	H, K, L, P, Q, X	Air blows out of the foot well register duct, and side registers. In addition ,air blows out slightly form the center defroster and side defroster.
	BI-LEVEL	I, K, N, P, R, X	Air blows out of the front and rear center registers, side registers and front and rear foot well register ducts.
	FACE	I, J, M, O, S, W	Air blows out of the front and rear center registers, and side registers.

3. AIR OUTLET AND AIRFLOW VOLUME

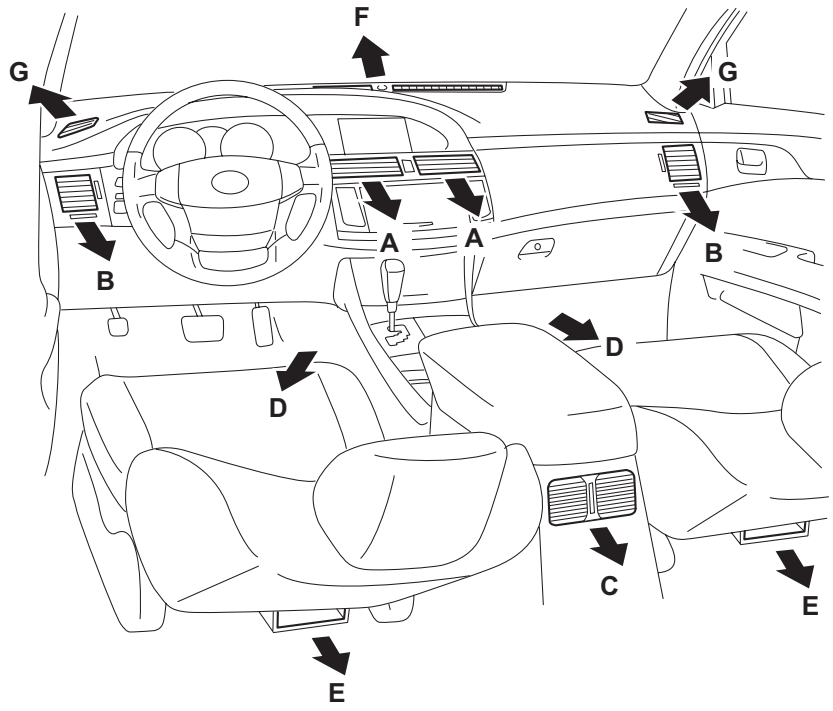

Y

C118755E03

INDICATION (MODE)	SELECTION AUTO / MANUAL	FACE			FOOT		DEF	
		CTR	SIDE	RR	FR	RR	CTR	SIDE
		A	B	C	D	E	F	G
(FACE - U)	○ / ○	◯	◯	◯	—	—	—	—
(B/L - U)	○ / ○	◯	◯	◯	○	○	—	—
(B/L - L)	○ / -	○	○	○	◯	◯	—	—
(FOOT - F)	○ / -	—	○	○	◯	○	○	○
(FOOT - R)	○ / ○	—	○	○	◯	◯	○	○
(FOOT - D)	○ / -	—	○	○	○	○	○	○
(F/D)	○ / ○	—	○	○	◯	◯	○	○

AC

(DEF) 	○ / ○	—	○	—	—	—	◯	◯

4. NEURAL NETWORK CONTROL

(a) In the previous automatic air conditioning system, the ECU determined the required outlet air temperature and blower air volume in accordance with the calculation formula that has been obtained based on information received from the sensors. However, because the sensors of a person is situated. For example, a given amount of solar radiation can feel comfortably warm in a cold climate, or extremely uncomfortable in a hot climate. Therefore, as a technique for effecting a higher level of control, a neural network has been adopted in the automatic air conditioning system. With this technique, the data that has been collected under varying environmental conditions i stored in the ECU, which effects control to provide enhanced air conditioning comfort.

(b) The neural network control consists of neurons the input layer, intermediate layer. The input layer neurons process the input data of the outside temperature, the amount of sunlight, and the cabin temperature based on the outputs of the switches and sensors, and output them to the intermediate layer neurons. Based on this data, the intermediate layer neurons adjust the strength of the mediate layer neurons. based on this data, the intermediate layer neurons adjust the strength of the links among the neurons. The sum of these is then calculated by the output layer neurons in the from of the required outlet temperature, solar correction, target airflow volume, and outlet mode control volume. Accordingly, Air Conditioning ECU controls the servomotors and blower motor in accordance with the control volumes that have been calculated by the neural network control.

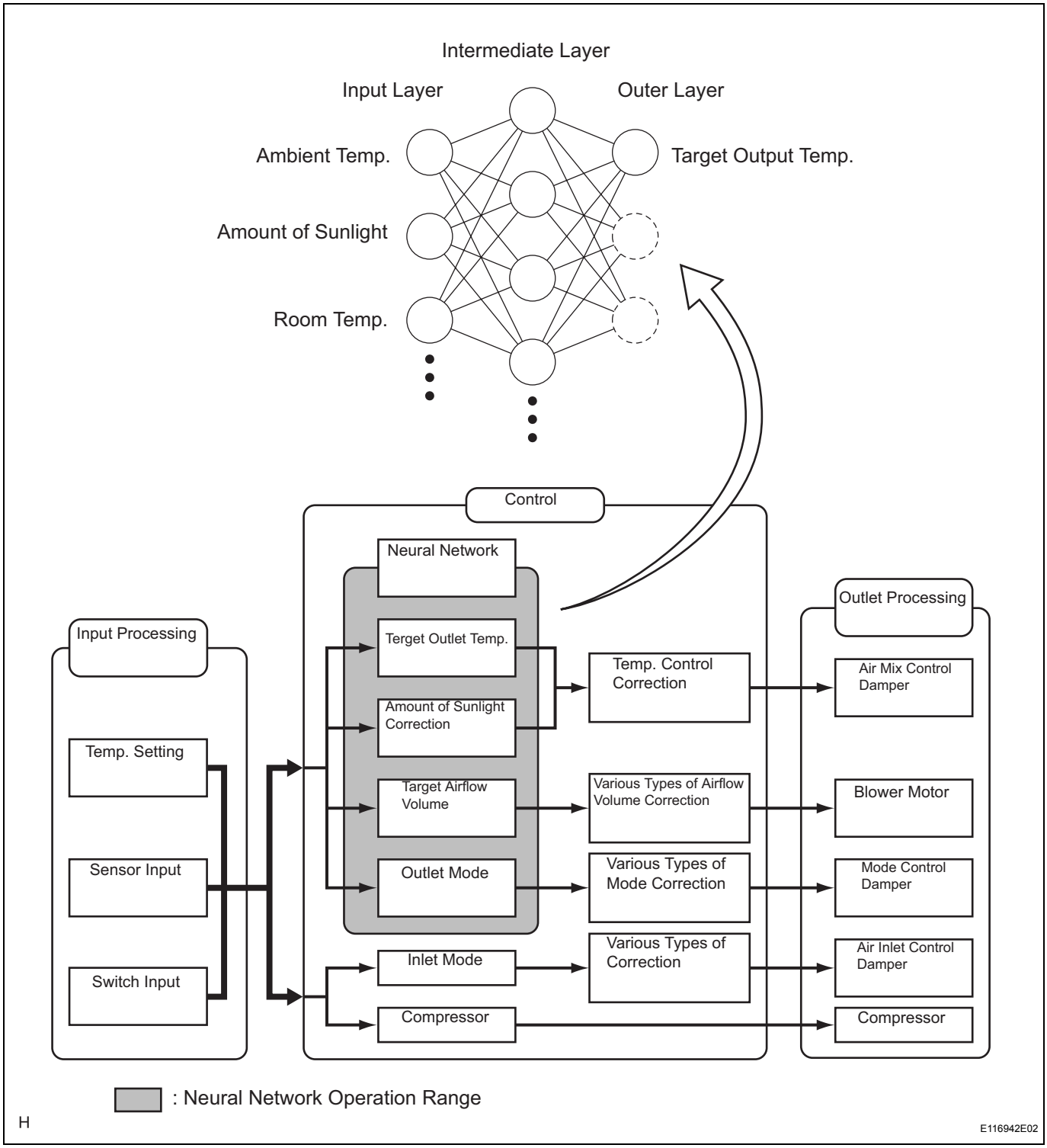

5. SELF-DIAGNOSIS

(a) Air Conditioning ECU has a self-diagnosis function. It stores any operation failures in the air conditioning system memory in the form of DTC (Diagnostic Trouble Code).

- There are two methods for reading DTCs. One is to use a intelligent tester, and the other is to read the DTC on the heater control panel switch.
- DTCs are shown on the center display or multi display of the multi-information display, and on the intelligent tester.

AC

6. HEATER CONTROL PANEL

(a) Push-button type heater control panel is used. The temperature control switches for the driver and front passenger are provided on the heater control panel to enhance their ease of use.

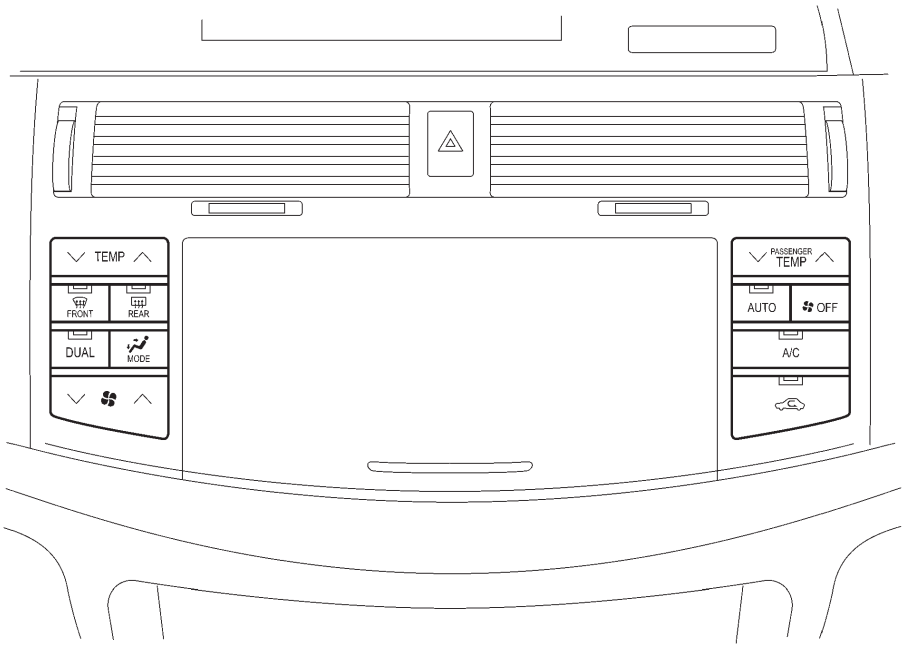

C I046150E01

7. AIR CONDITIONING UNIT

(a) A semi-center location air conditioner unit, in the evaporator and heater core are placed in the vehicle's longitudinal direction, is used. As result, the air conditioning unit is made compact and lightweight.

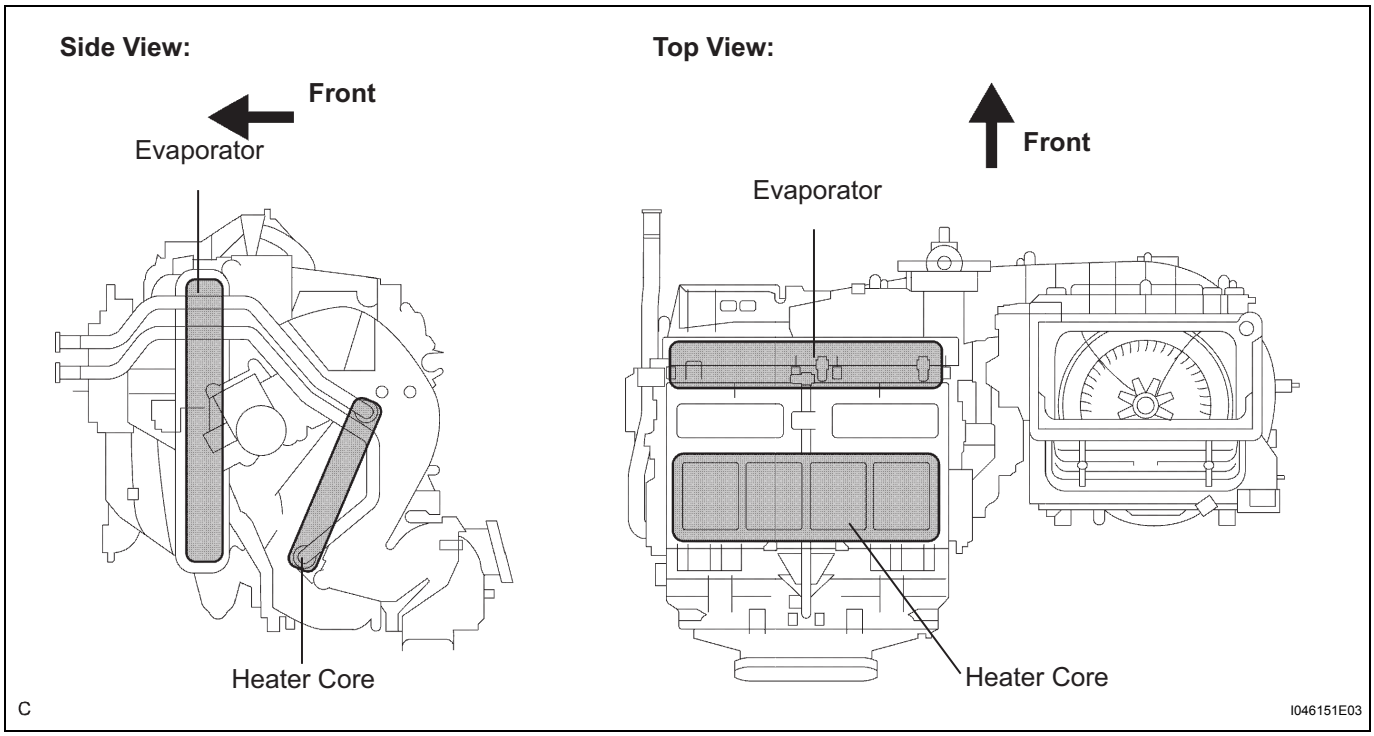

8. EVAPORATOR

(a) A revolutionary super-slim structure evaporator is used. Placing the tanks at the top and the bottom of the evaporator and adopting a micropore tube construction have realized the following effects:

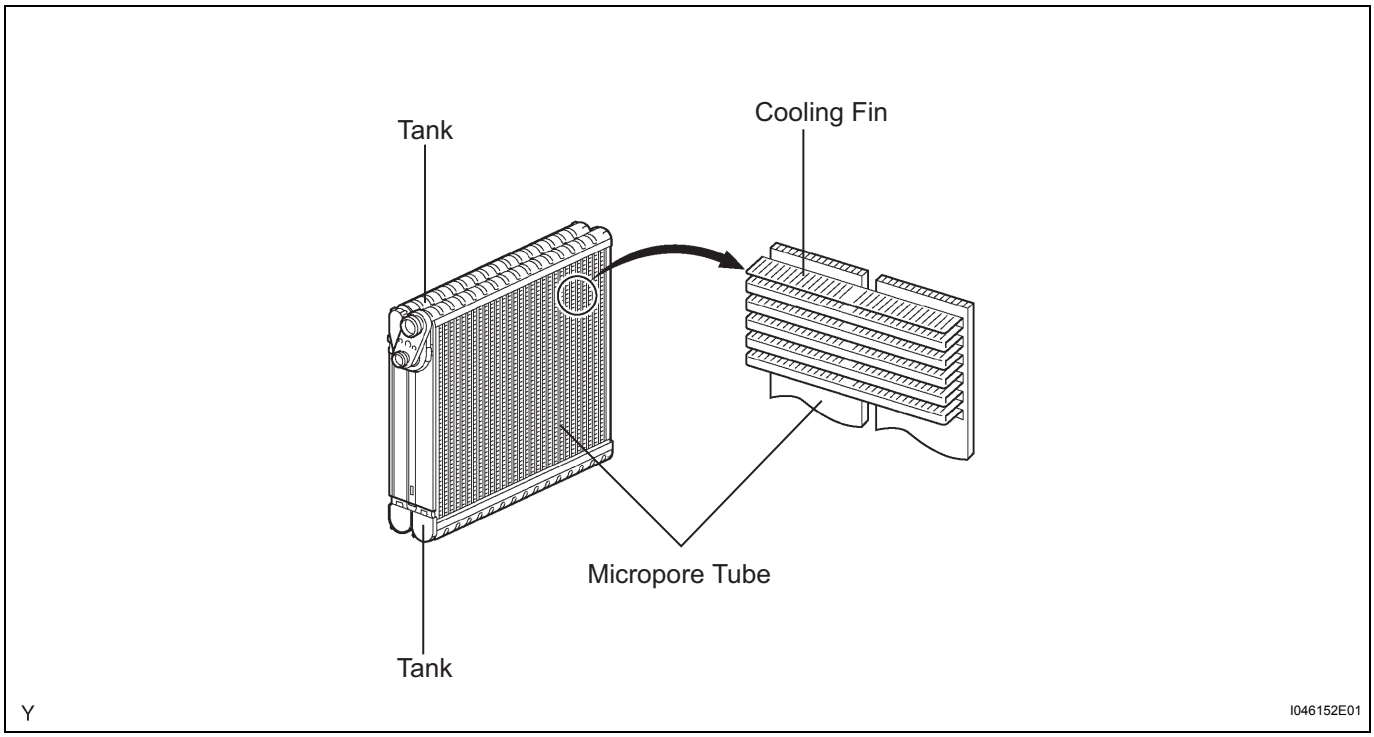

- The hear exchanging efficiency is improved.
- the temperature distribution is made more uniform.
- The evaporator is mode thinner. 58 mm (2.3 in.) → 38 mm (1.5 in.)

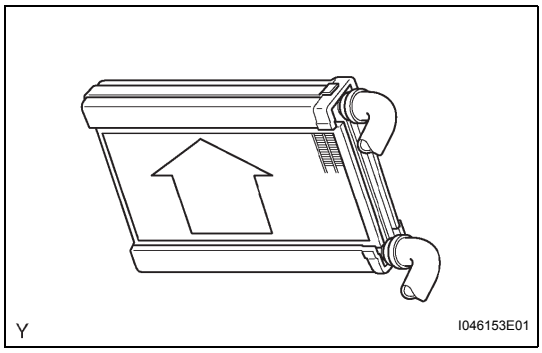

9. HEATER CORE

(a) A compact, lightweight, and highly efficient straight flow (full-path flow) aluminum heater core is used.

10. BLOWER MOTOR

(a) The blower motor has an in-built blower controller, and is controlled with the duty control from the Air Conditioning ECU.

11. BUS CONNECTOR

(a) ABUS connector is used in the wire harness connection that connects the servomotor the Air Conditioning ECU.

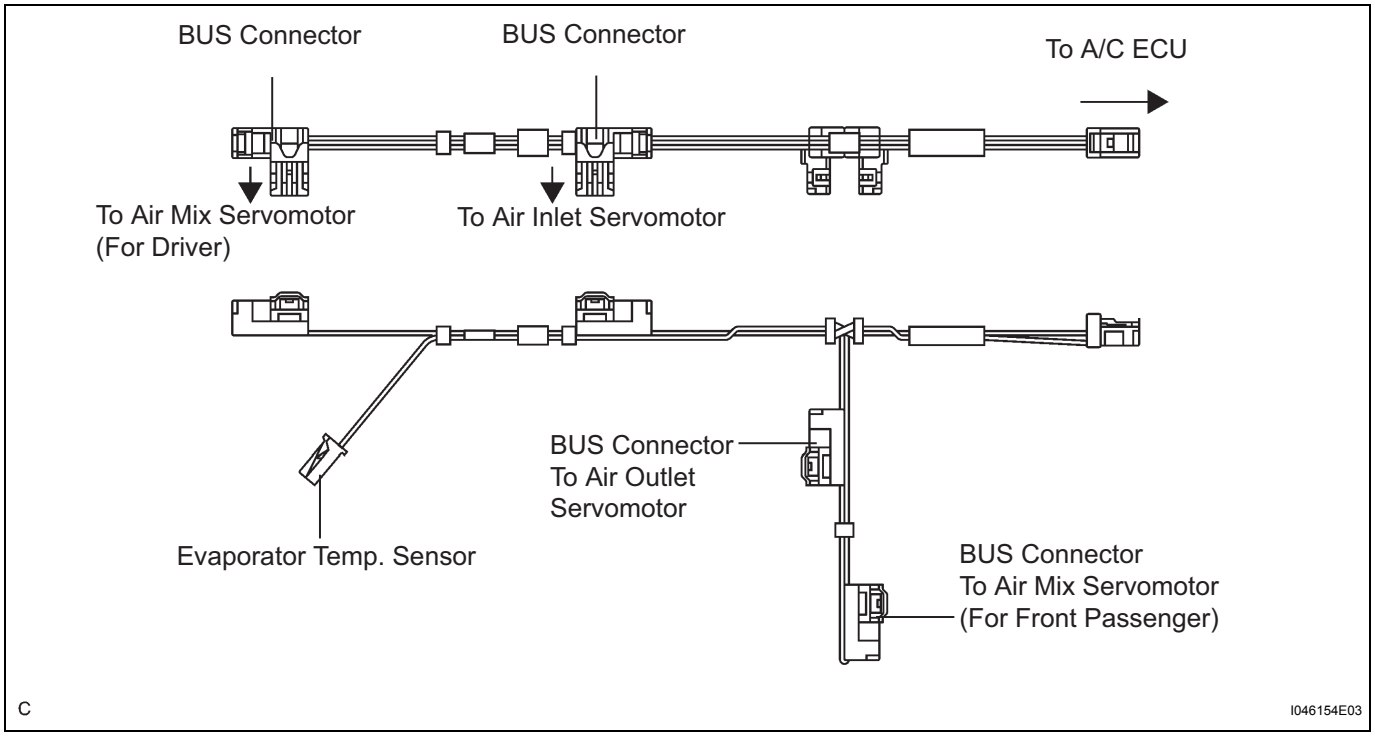

The BUS connector has an in built communication / drive IC which communicates with each servomotor connector, actuates the servomotor, and position detection function. This enables bus communication for the for the servo motor wire harness, for a more lightweight construction and a reduced number of wires.

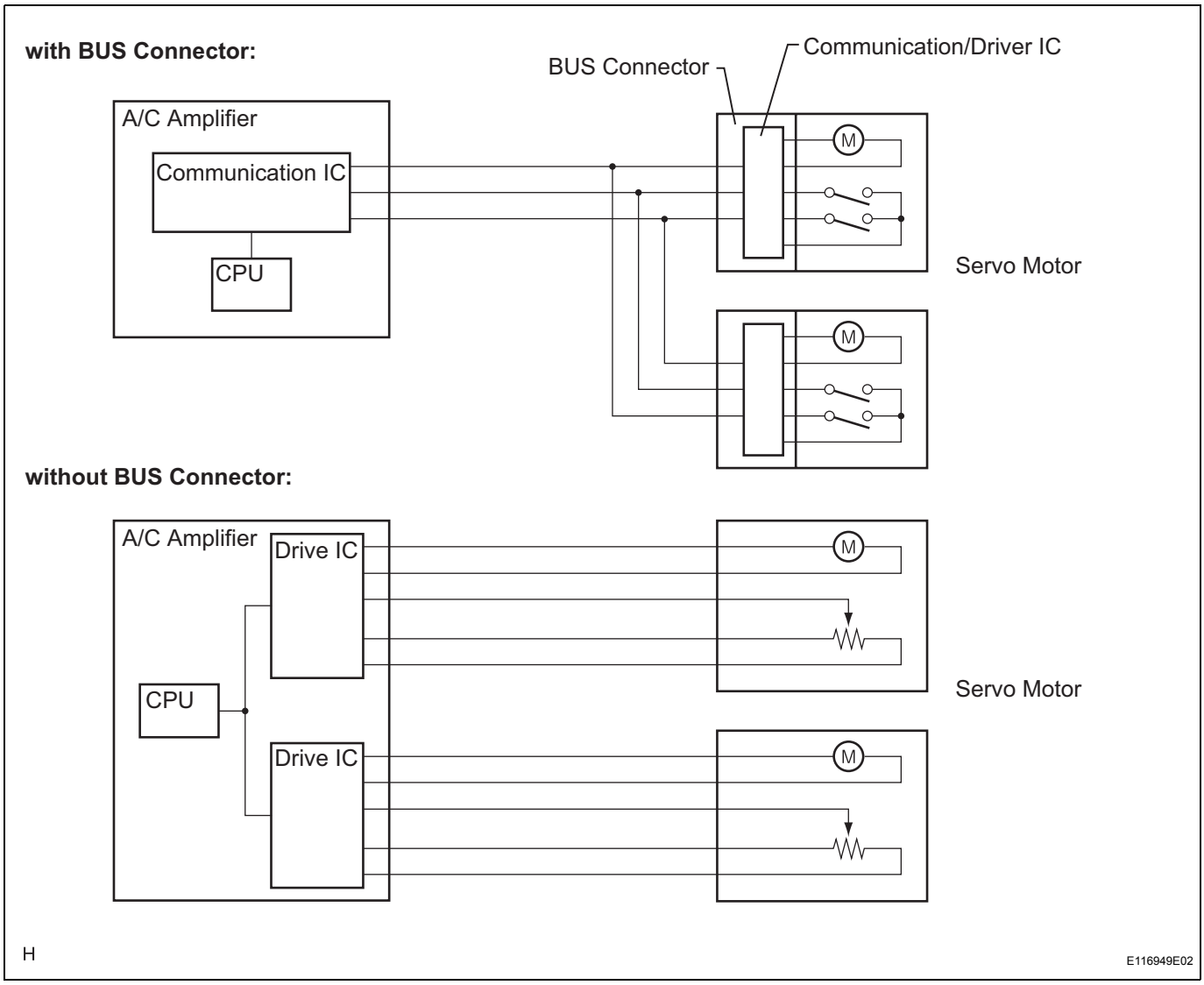

12. SERVO MOTOR

(a) The pulse pattern type servomotor consists of a printed circuit board and servomotor. The printed circuit board has three contact points, phase. The smart connector detects the damper position and movement direction with this signal.

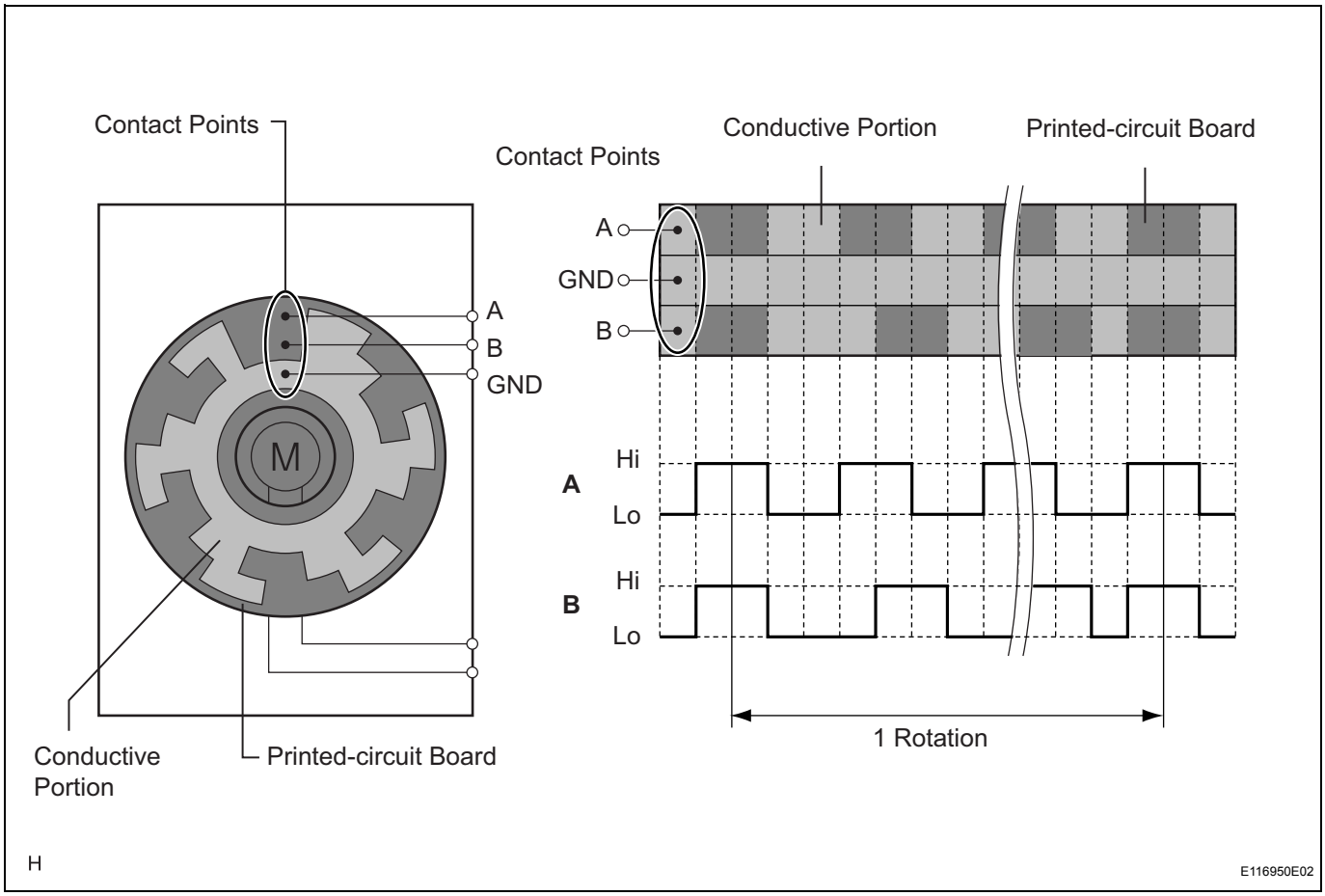

13. CLEAN AIR FILTER

(a) A clean air filter (micro dust and pollen filter) is used. this filter excels in the removal of dust and pollen. The filter made be disposed of easily as a combustible material, a feature that is provided in consideration of the environment.

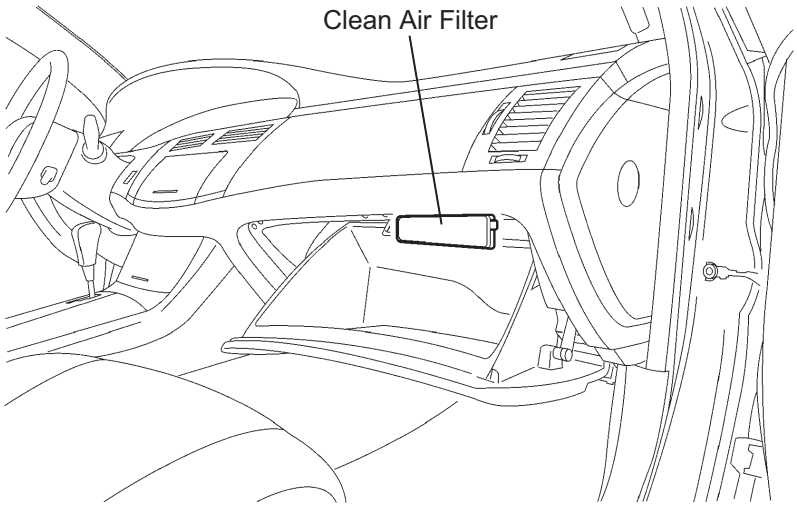

C

I046157E01

14. CONDENSER

(a) The condenser consisting of two cooling portions: a condensing portion and a super-cooling portion, and gas-liquid separator (modulator) all integrated together. this condenser uses a sub-cool cycle that offers excellent heat-exchange performance.

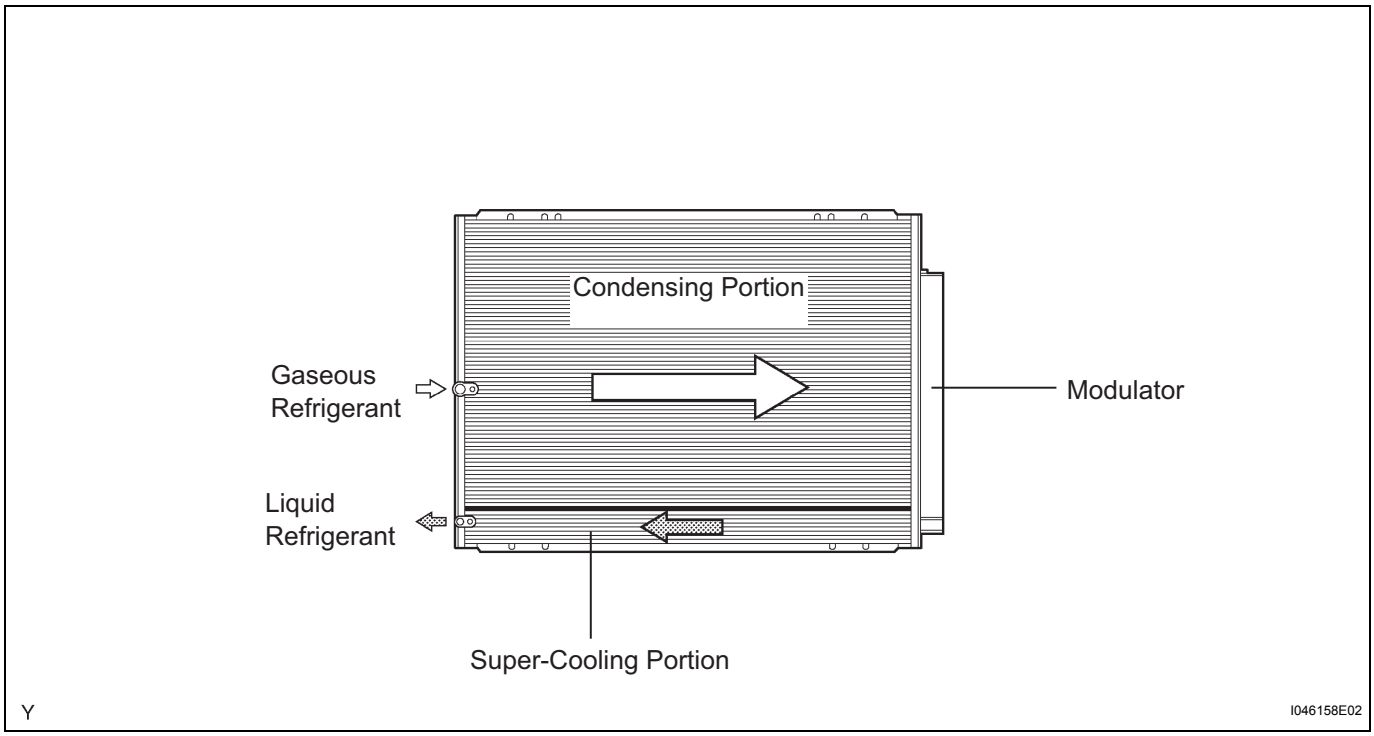

- In the sub-cycle, after the refrigerant passes through the condensing portion of the condenser both the liquid refrigerant and the gaseous refrigerant that could not be liquefied are cooled again in the super-cooling portion. thus, the refrigerant is sent to the evaporator in an almost completely liquefied state.

15. A/C COMPRESSOR

(a) A/C compressor is continuously variable capacity type in which its capacity varies in accordance with the cooling load of the air conditioning.

(1) This compressor consists of the shaft, lug plate, piston, shoe, crank, chamber, cylinder, and solenoid control valve.

(2) A solenoid control valve that adjusts the suction pressure so that the suction pressure can be controlled as desired is provided.

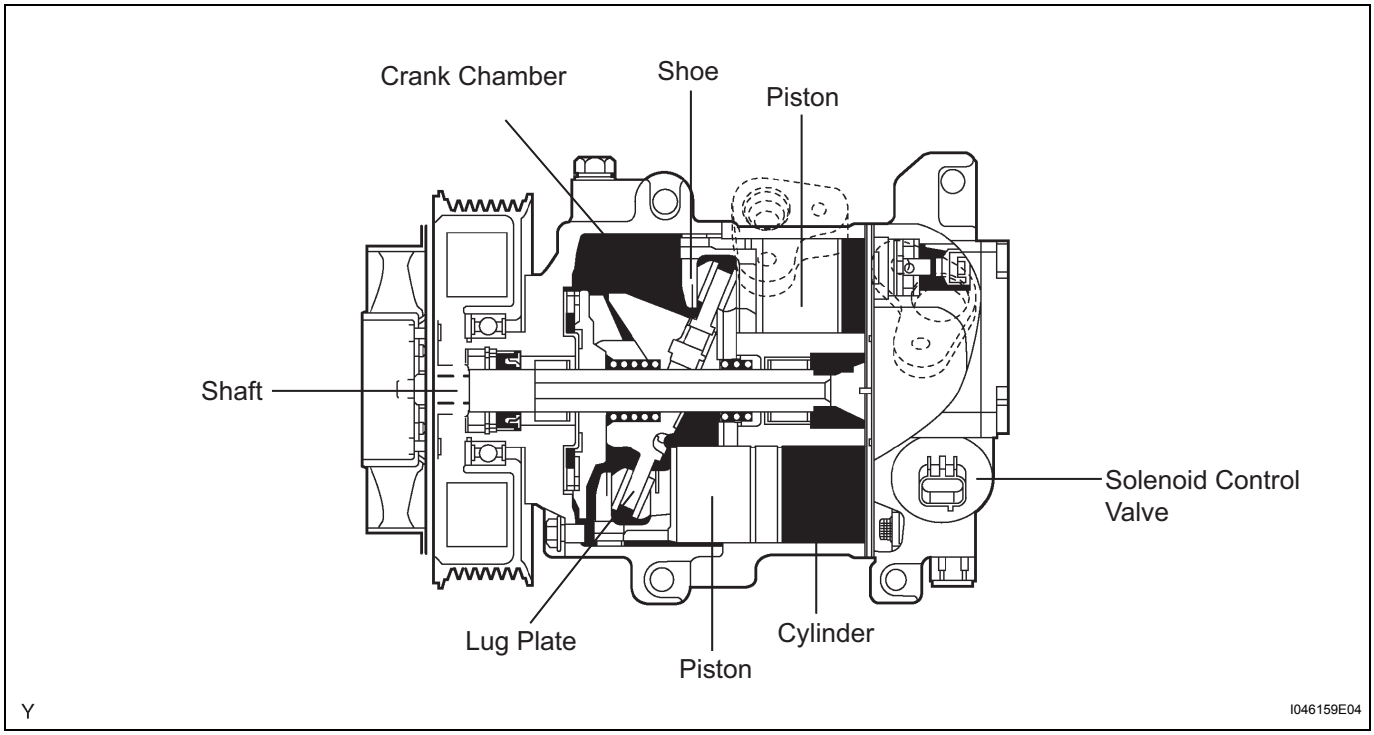

(3) The crank chamber is connected to the suction passage. A solenoid control valve is provided between the suction passage (LO pressure) and the discharge passage (HI pressure).
(4) The solenoid control valve operates under duty cycle control in accordance with the signals from A/C ECU.

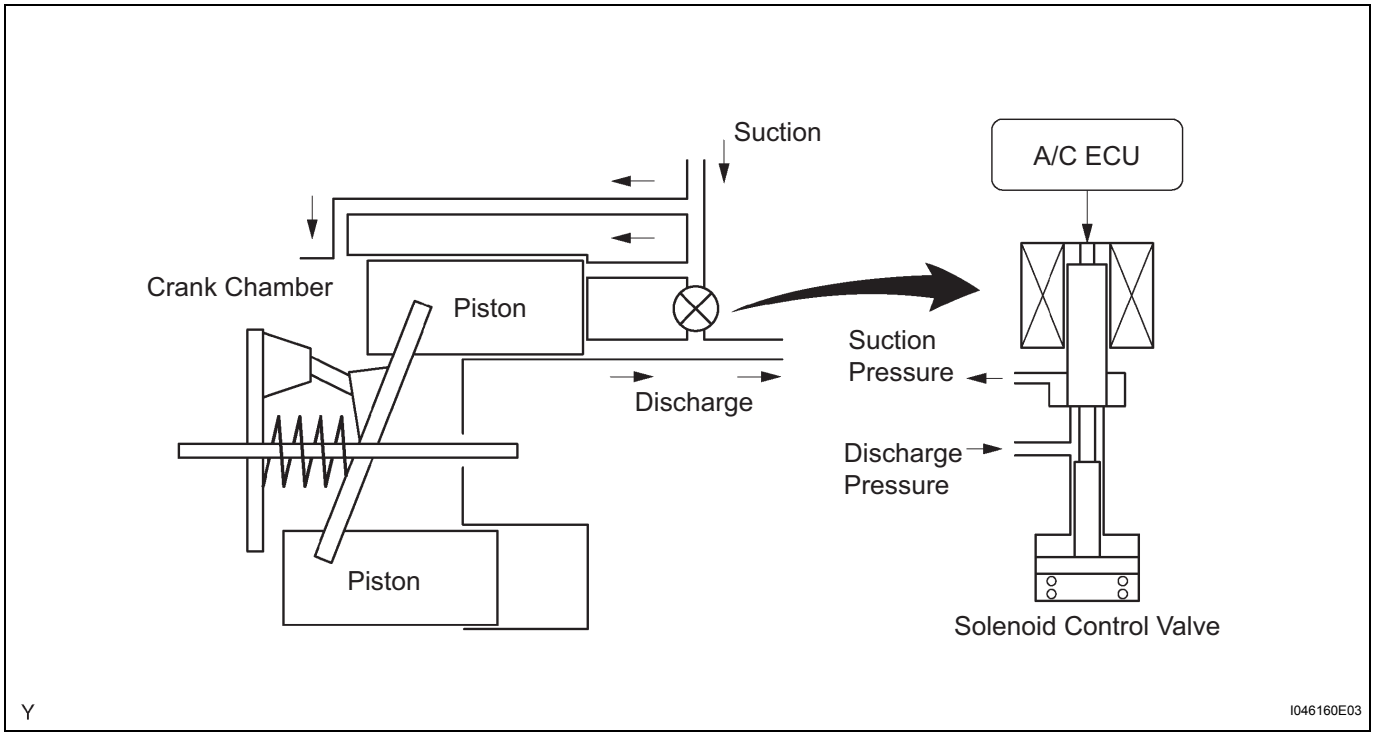

(5) When the solenoid control valve closes (solenoid coil is energized), a difference in pressure is created and the pressure in the crank chamber decreases. Then, the pressure that is applied to the right side of the piston becomes greater than the pressure that is applied to the left side of the piston. this compresses the spring and tilts the lug plate. As a result, the piston stroke increases and the discharge capacity increases.

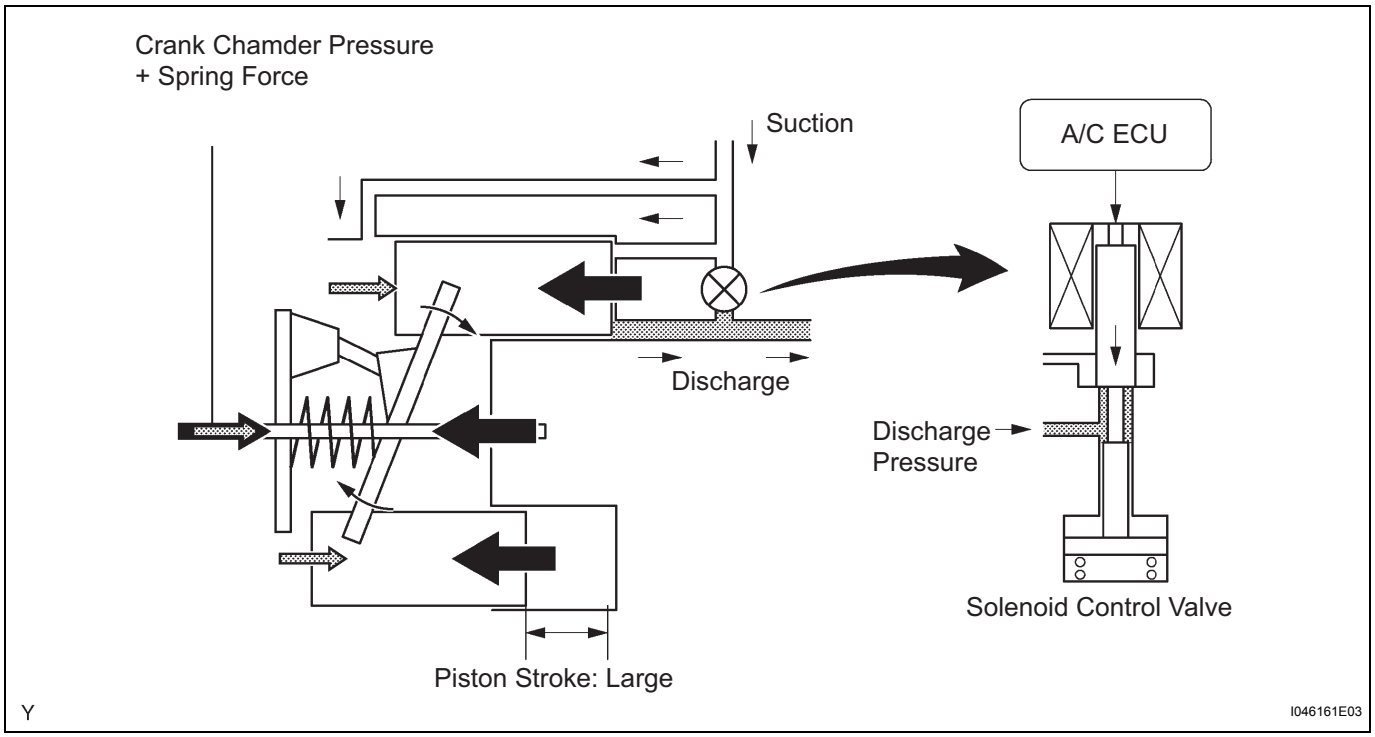

(6) When the solenoid control valve opens (solenoid coil is not energized), the difference in pressure disappears. Then, the pressure that is applied to the right side of the piston. Thus, the spring elongates and eliminates the tilt of the lug plate. As a result, there is no piston stroke and the discharge capacity turns to decrease.

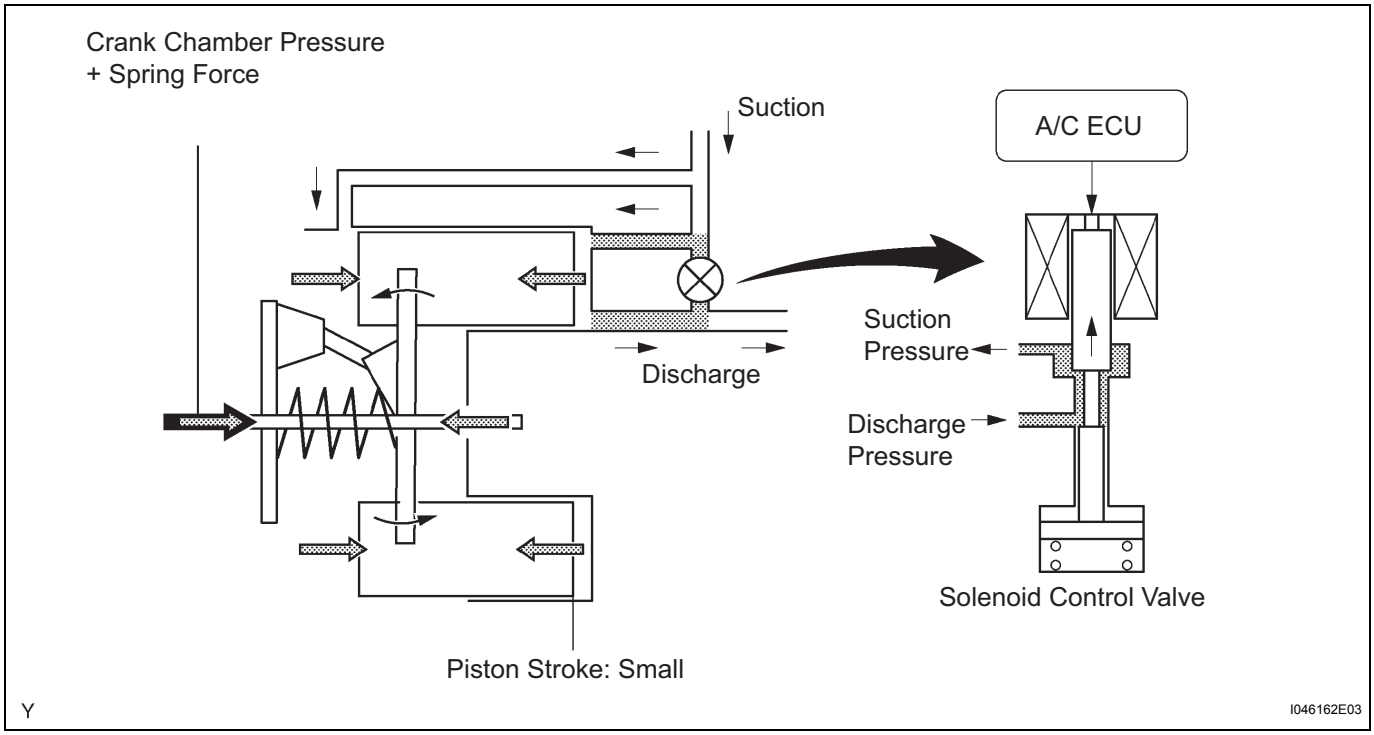
Crank Chamber Pressure
+ Spring Force
Suction
A/C ECU
Suction
Pressure
Discharge
Discharge
Pressure
Solenoid Control Valve
Piston Stroke: Small
Y
I046162E03

PARTS LOCATION

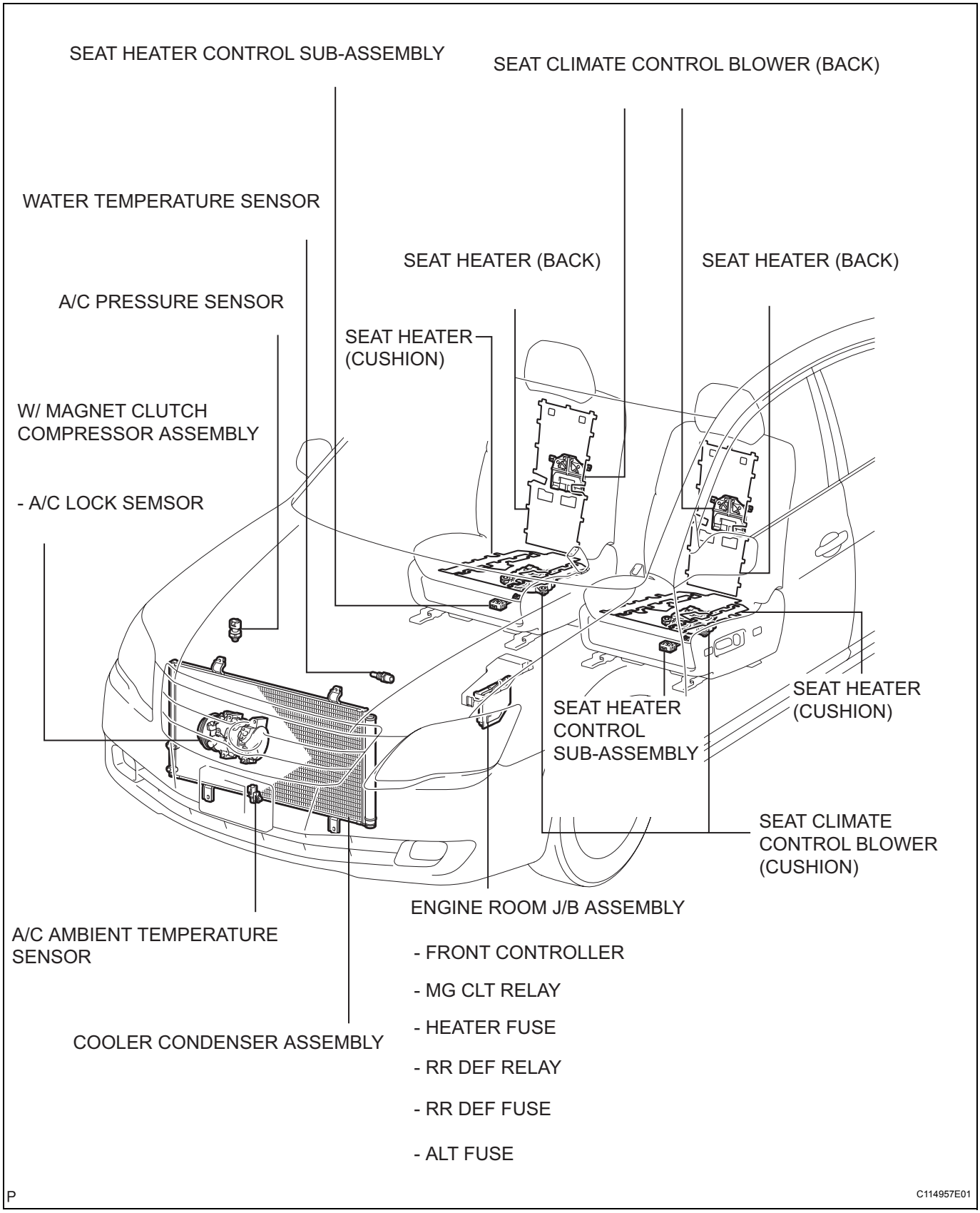

C114957E01

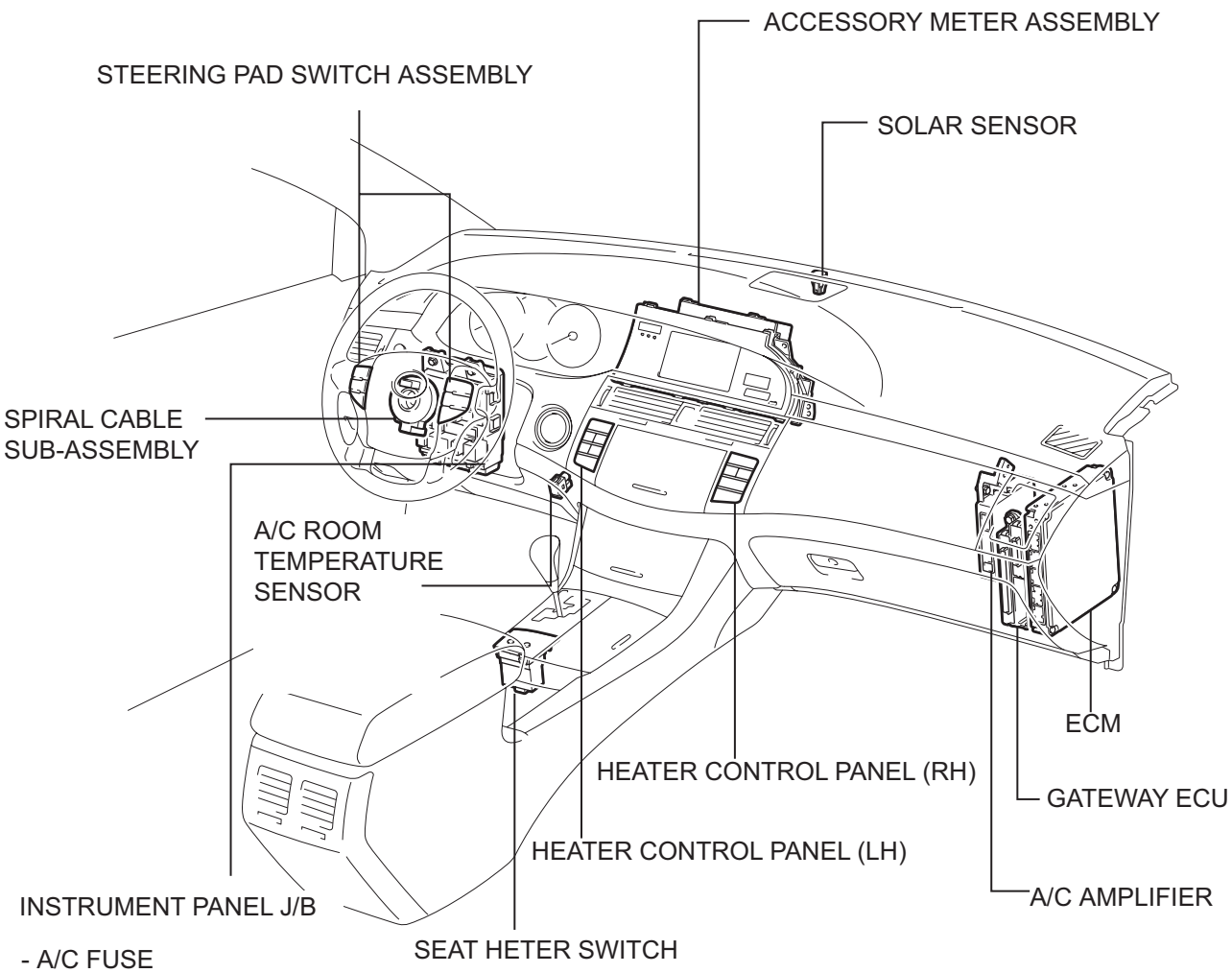

- A/C FUSE
- A/C COMP FUSE
- S-HTR FUSE
- HTR FUSE
- MULTIPLEX NETWORK BODY ECU

P

C114912E02

AC

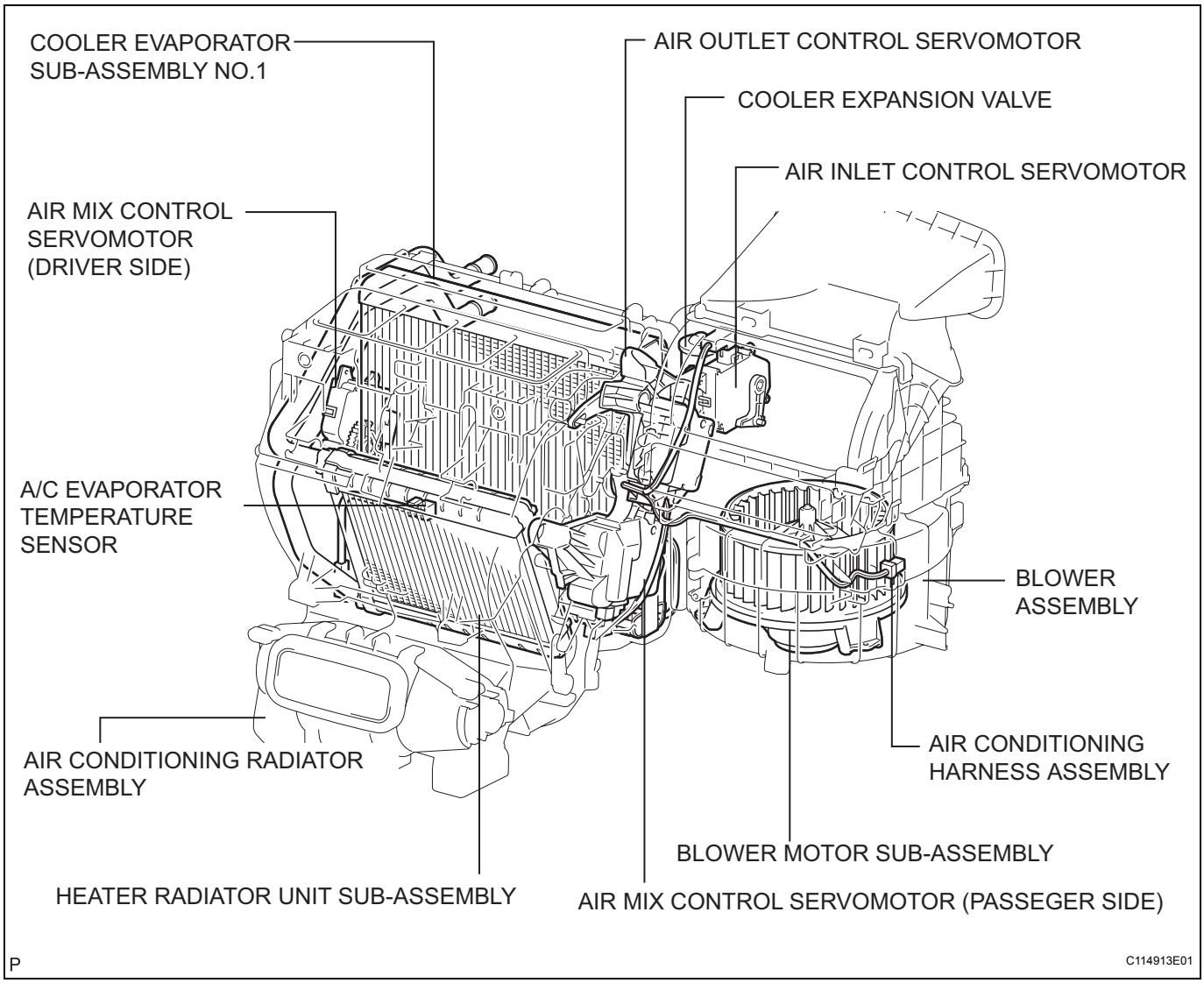
COOLER EVAPORATOR SUB-ASSEMBLY NO.1
AIR OUTLET CONTROL SERVOMOTOR
COOLER EXPANSION VALVE
AIR INLET CONTROL SERVOMOTOR
AIR MIX CONTROL SERVOMOTOR (DRIVER SIDE)
A/C EVAPORATOR TEMPERATURE SENSOR
BLOWER ASSEMBLY
AIR CONDITIONING HARNESS ASSEMBLY
AIR CONDITIONING RADIATOR ASSEMBLY
BLOWER MOTOR SUB-ASSEMBLY
HEATER RADIATOR UNIT SUB-ASSEMBLY
AIR MIX CONTROL SERVOMOTOR (PASSEGER SIDE)
P
C114913E01

SYSTEM DIAGRAM

1. SYSTEM DIAGRAM

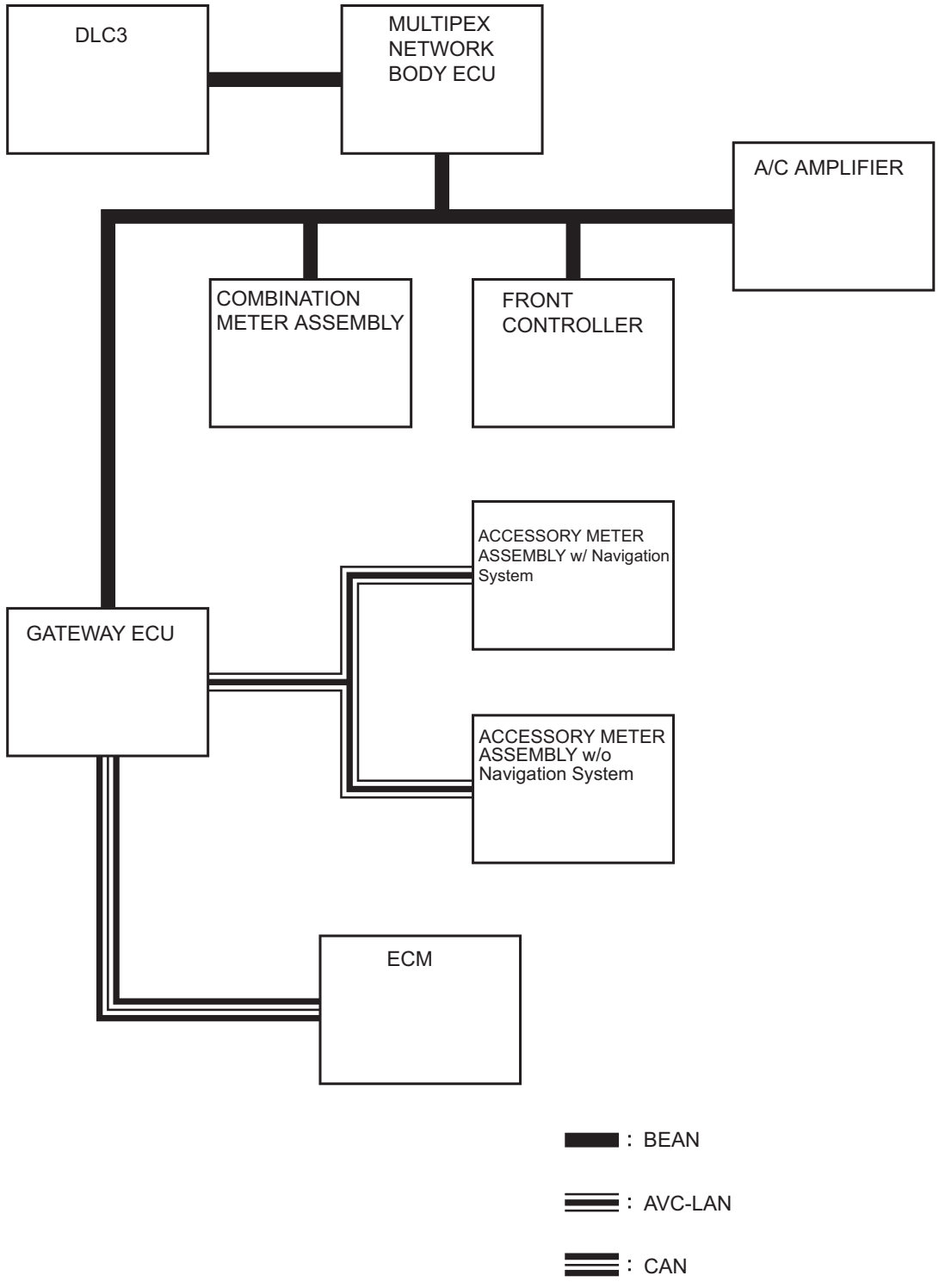

N

I046123E03

AC

Transmitter	Receiver	Line	Signal
A/C Amplifier	ECM	BEAN / CAN	Heater Relay Control Signal
			Magnetic Clutch Control Signal
			Rear DEF Relay Control Signal
			Idle Up Signal
			Pressure Sensor Signal
			External Variable Control Solenoid Current Signal
A/C Amplifier	Multiplex Network Body ECU	BEAN	Diagnostic Tool Response
			Diagnostic Data
A/C Amplifier	Accessory Meter Assembly	BEAN / CAN-LAN	Indicator ON demand signal
ECM	A/C Amplifier	BEAN / CAN	Engine Speed (500ms)
			Engine Coolant Temperature
			A/C Control Cut Signal
Front Controller	A/C Amplifier	BEAN	Outside Temperature Data
Multiplex Network Body ECU	A/C Amplifier	BEAN	Diagnostic Tool Request Signal
			Diagnostic Erase Signal
Combination Meter Assembly	A/C Amplifier	BEAN	Vehicle Speed Signal

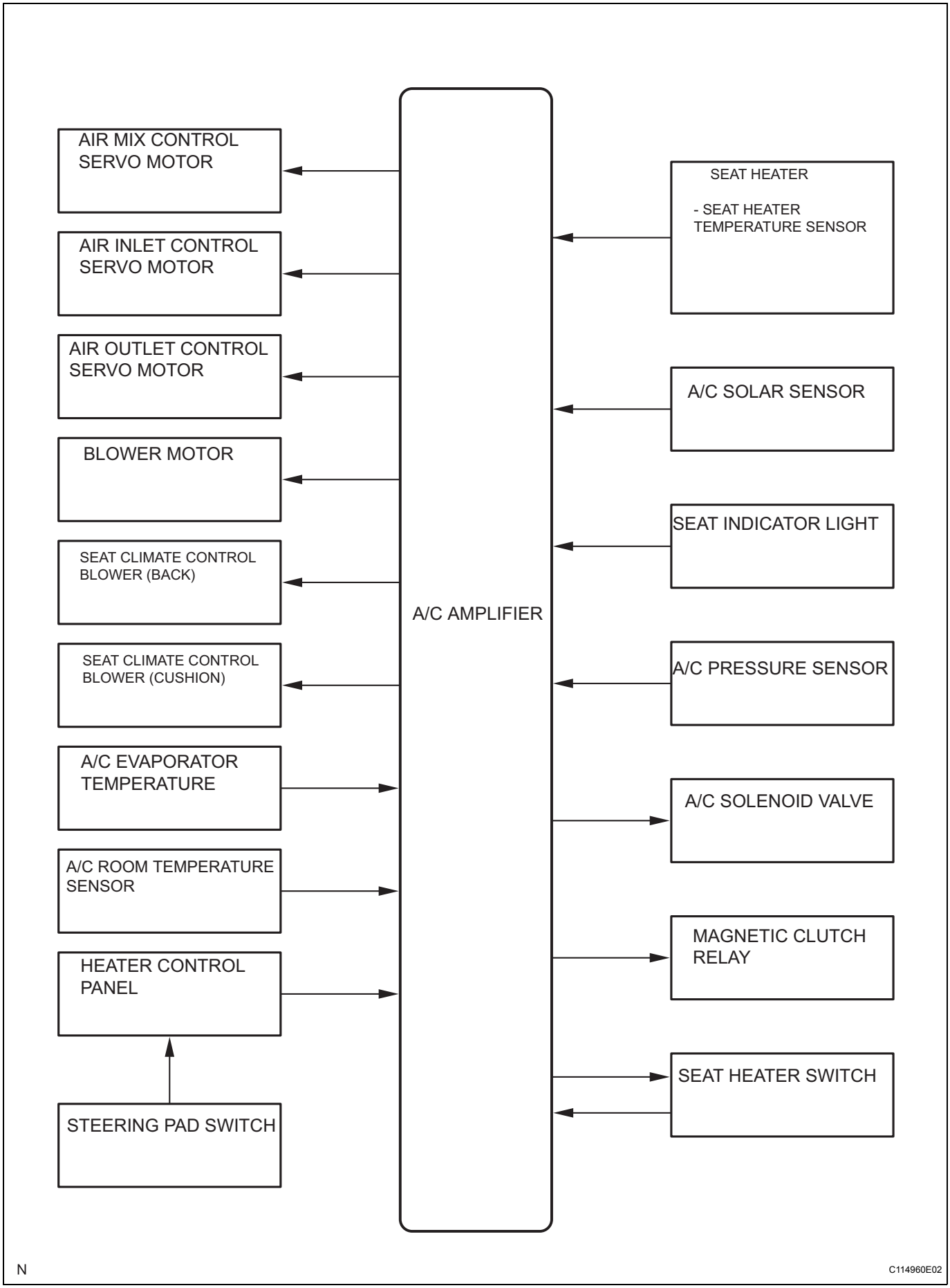
AIR MIX CONTROL SERVO MOTOR
AIR INLET CONTROL SERVO MOTOR
AIR OUTLET CONTROL SERVO MOTOR
BLOWER MOTOR
SEAT CLIMATE CONTROL BLOWER (BACK)
SEAT CLIMATE CONTROL BLOWER (CUSHION)
A/C EVAPORATOR TEMPERATURE
A/C ROOM TEMPERATURE SENSOR
HEATER CONTROL PANEL
STEERING PAD SWITCH
A/C AMPLIFIER
SEAT HEATER
- SEAT HEATER TEMPERATURE SENSOR
A/C SOLAR SENSOR
SEAT INDICATOR LIGHT
A/C PRESSURE SENSOR
A/C SOLENOID VALVE
MAGNETIC CLUTCH RELAY
SEAT HEATER SWITCH
N
C114960E02

AC

DTC	B1412/12	Ambient Temperature Sensor Circuit

DESCRIPTION

The sensor connected to the engine room J/B assembly (front controller) detects fluctuations in the ambient temperature that is used for controlling the interior temperature. The sensor sends a to the A/C amplifier via the engine room J/B assembly (front controller).

DTC No.	Detection item	Trouble Area
B1412/12	Ambient temperature sensor circuit (Open or short)	• A/C ambient temperature sensor • Harness or connector between A/C ambient temperature sensor and engine room J/B assembly (front controller) • Engine room J/B assembly (Front controller)

WIRING DIAGRAM

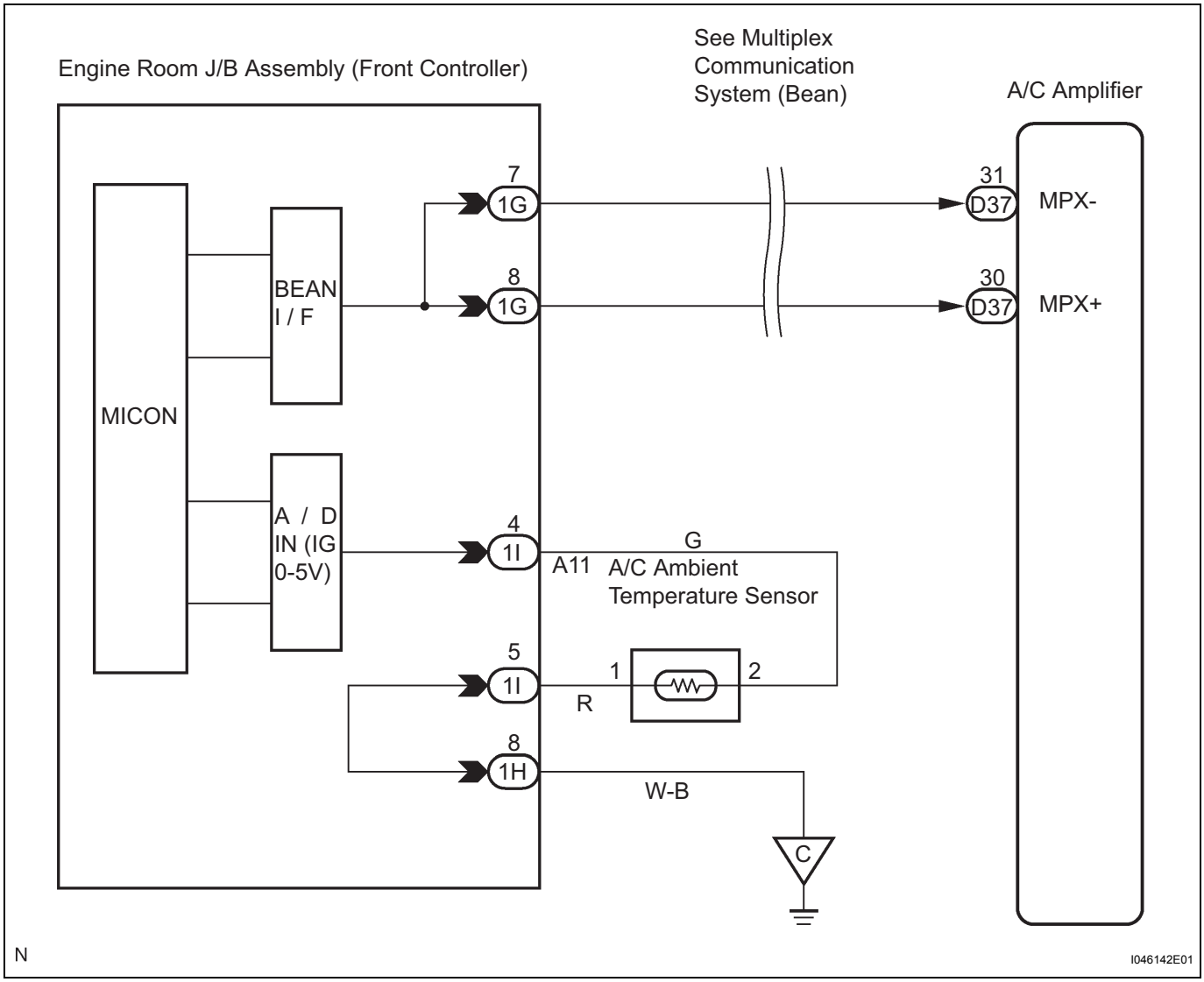

INSPECTION PROCEDURE

1 READ VALUE OF INTELLIGENT TESTER

(a) Connect the intelligent to the DLC3.
(b) Turn the ignition switch on (IG) and push the intelligent tester main switch on.
(c) Select the item below in the DATA LIST, and read the display on the intelligent tester.

DATA LIST / AIR CONDITIONER:

Item	Measurement Item / Display (Range)	Normal Condition	Diagnostic Note
AMBI TEMP SENS	Ambient temperature sensor / min.: -23.3°C (-9.94°F) max.: 65.96°C (150.71°F)	Actual ambient temperature is displayed	-

OK:
The display is as specified in the normal condition.

Result

Result	Proceed to
NG	A
OK (Checking from the PROBLEM SYMPTOM TABLE)	B
OK (Checking from the DTC)	C

B → PROCEED TO NEXT CIRCUIT INSPECTION SHOWN IN PROBLEM SYMPTOMS TABLE

C → REPLACE AIR CONDITIONING AMPLIFIER

A

2 INSPECT ENGINE ROOM JUNCTION BLOCK ASSEMBLY (FRONT CONTROLLER)

Engine Room J/B Assembly Connector Wire Harness View:

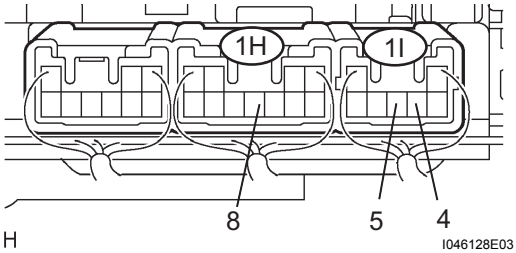

(a) Remove the engine room J/B assembly (front controller) with connectors still connected.
(b) Turn the ignition switch on (IG).
(c) Measure the voltage according to the value(s) in the table below.

Voltage

Tester connection	Condition	Specified condition
1I-4 - 1I-5	Ignition switch on (IG) at 25°C (77°F)	1.8 to 2.2 V
1I-4 - 1I-5	Ignition switch on (IG) at 40°C (104°F)	1.2 to 1.6 V

HINT:
As the temperature increases, the voltage decreases.

Result

Result	Proceed to
NG	A
OK (Checking from the PROBLEM SYMPTOM TABLE)	B
OK (Checking from the DTC)	C

AC

B	PROCEED TO NEXT CIRCUIT INSPECTION SHOWN IN PROBLEM SYMPTOMS TABLE
C	Go to step 6

A

3 INSPECT A/C AMBIENT TEMPERATURE SENSOR

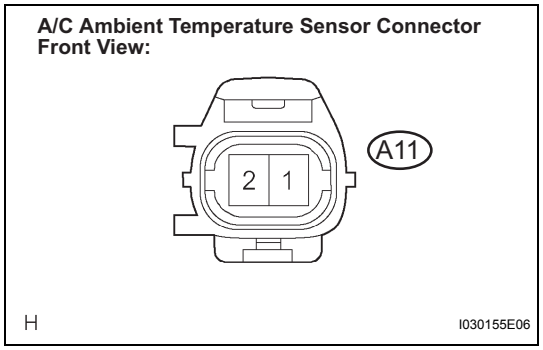

(a) Remove the A/C ambient temperature sensor.

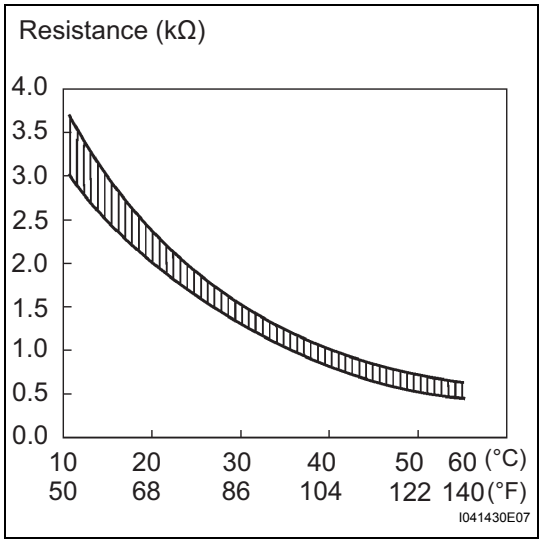

(b) Measure the resistant according to the value(s) in thew table below.

Resistance

Tester connection	Condition	Specified condition
A11-1 - A11-2	10°C (50°F)	3.00 to 3.73 kΩ
A11-1 - A11-2	15°C (59°F)	2.45 to 2.88 kΩ
A11-1 - A11-2	20°C (68°F)	1.95 to 2.30 kΩ
A11-1 - A11-2	25°C (77°F)	1.60 to 1.80 kΩ
A11-1 - A11-2	30°C (86°F)	1.28 to 1.47 kΩ
A11-1 - A11-2	35°C (95°F)	1.00 to 1.22 kΩ
A11-1 - A11-2	40°C (104°F)	0.80 to 1.00 kΩ
A11-1 - A11-2	45°C (113°F)	0.65 to 0.85 kΩ
A11-1 - A11-2	50°C (122°F)	0.50 to 0.70 kΩ
A11-1 - A11-2	55°C (131°F)	0.44 to 0.60 kΩ
A11-1 - A11-2	60°C (140°F)	0.36 to 0.50 kΩ

NOTICE:

- **Only hold the sensor at its connector. Touching the sensor may change the resistance value.**
- **When measuring, the sensor temperature must be the same as the ambient temperature.**

HINT:

As the temperature increases, the resistance decreases (See the graph).

NG	REPLACE A/C AMBIENT TEMPERATURE SENSOR

OK

4	CHECK HARNESS AND CONNECTOR (ENGINE ROOM J/B ASSEMBLY - A/C AMBIENT TEMPERATURE SENSOR)

A/C Ambient Temperature Sensor Connector Front View:



(a) Disconnect the connector from A/C ambient temperature sensor.

Engine Room J/B Assembly Connector Wire Harness View:

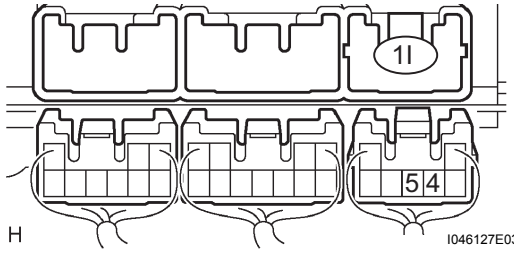

(b) Disconnect the connector from the engine room J/B assembly.
(c) Measure the resistance according to the value(s) in the table below.

Resistance

Tester connection	Condition	Specified condition
1I-5 - A11-1	Always	Below 1 Ω
1I-4- A11-2	Always	Below 1 Ω
1I-5 - Body ground	Always	10 kΩ or higher
1I-4 - Body ground	Always	10 kΩ or higher

NG → REPAIR OR REPLACE HARNESS OR CONNECTOR

OK

5	CHECK HARNESS AND CONNECTOR (ENGINE ROOM J/B ASSEMBLY (FRONT CONTROLLER) - BODY GROUND)

Engine Room J/B Assembly Connector Wire Harness View:

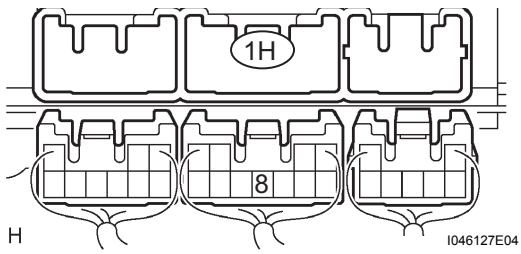

(a) Measure the resistance according to the value(s) in the table below.

Resistance

Tester connection	Condition	Specified condition
1H-8 - Body ground	Always	Below 1 Ω

NG → REPAIR OR REPLACE HARNESS OR CONNECTOR

OK

6	REPLACE ENGINE ROOM JUNCTION BLOCK ASSEMBLY (FRONT CONTROLLER)

HINT:
Check for DTC B1412/12 after replacing the engine room J/B assembly.

AC

OK:
DTC B1412/12 is not output.

NG → **REPLACE AIR CONDITIONING AMPLIFIER**

OK

END

DTC B1413/13 Evaporator Temperature Sensor Circuit

DESCRIPTION

This sensor detects the evaporator temperature and sends the appropriate signals to the A/C amplifier. It is used for frost prevention, temperature and time-lag air flow control.

DTC No.	Detection Item	Trouble Area
B1413/13	Evaporator temperature sensor circuit (Open or short)	• A/C evaporator temperature sensor • Harness or connector between A/C evaporator temperature sensor and A/C amplifier • A/C amplifier

WIRING DIAGRAM

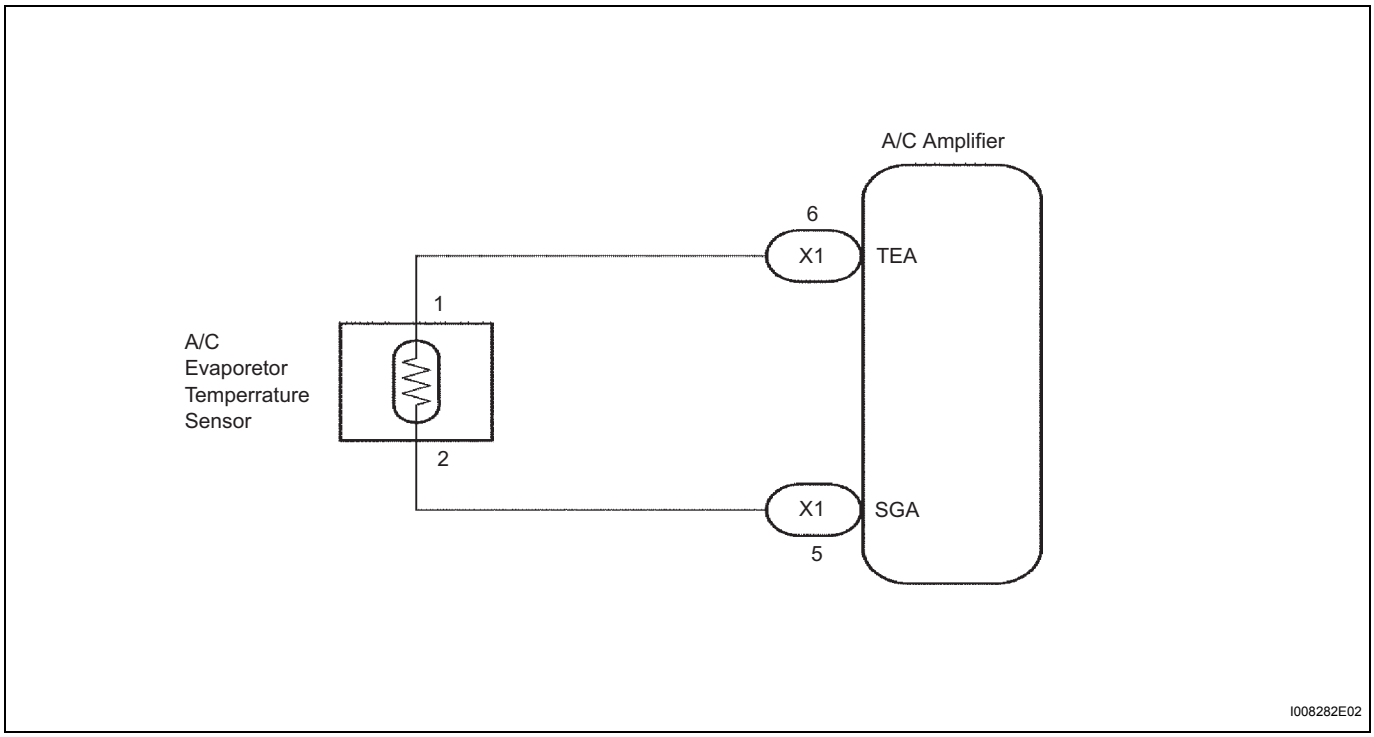

INSPECTION PROCEDURE

1 INSPECT AIR CONDITIONING AMPLIFIER (TEA - SGA)

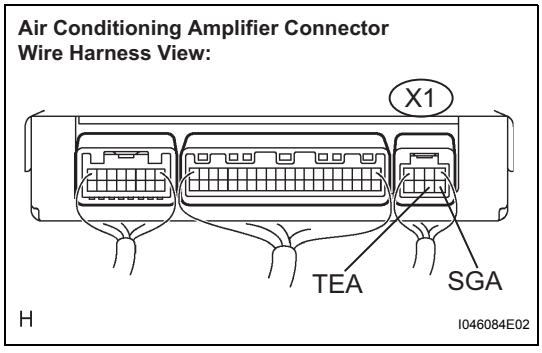

(a) Remove the air conditioning amplifier with connectors still connected.
(b) Turn the ignition switch on (IG).
(c) Measure the voltage according to the value(s) in the table below.

Voltage

Tester connection	Condition	Specified condition
X1-6 (TEA) - X1-5 (SGA	Ignition switch on (IG) at 0°C (32°F)	2.0 to 2.4 V
X1-6 (TEA) - X1-5 (SGA	Ignition switch on (IG) at 15°C (59°F)	1.4 to 1.8 V

HINT:
As the temperature increases, the voltage decreases.

AC

Result

Result	Proceed to
NG	A
OK (Checking from the PROBLEM SYMPTOM TABLE)	B
OK (Checking from the DTC)	C

B → PROCEED TO NEXT CIRCUIT INSPECTION SHOWN IN PROBLEM SYMPTOMS TABLE

C → REPLACE AIR CONDITIONING AMPLIFIER

A

2 INSPECT A/C EVAPORATOR TEMPERATURE SENSOR

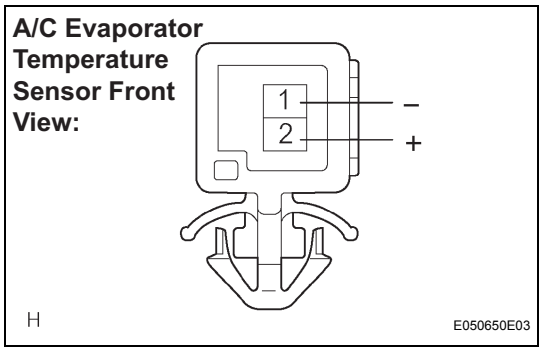

(a) Remove the A/C evaporator temperature sensor.

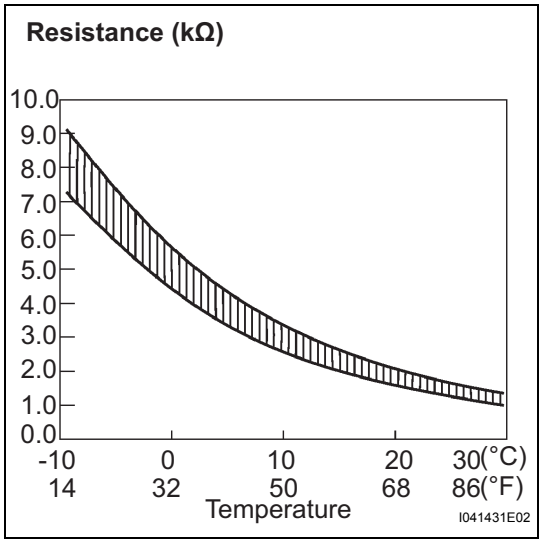

(b) Measure the resistance according to the value(s) in table below.

Resistance

Tester connection	Condition	Specified condition
1 - 2	-10°C (14°F)	7.30 to 9.10 kΩ
1 - 2	-5°C (23°F)	5.65 to 6.95 kΩ
1 - 2	0°C (32°F)	4.40 to 5.35 kΩ
1 - 2	5°C (41°F)	3.40 to 4.15 kΩ
1 - 2	10°C (50°F)	2.70 to 3.25 kΩ
1 - 2	15°C (59°F)	2.14 to 2.58 kΩ
1 - 2	20°C (68°F)	1.71 to 2.05 kΩ
1 - 2	25°C (77°F)	1.38 to 1.64 kΩ
1 - 2	30°C (86°F)	1.11 to 1.32 kΩ

NOTICE:

- **Only hold the sensor at its connector. Touching the sensor may change the resistance value.**
- **When measuring, the sensor temperature must be the same as the ambient temperature.**

HINT:

- As the temperature increases, the resistance decrease (See the graph).
- When replacing the A/C evaporator temperature sensor, the attached sub-harness should be replaced along with the sensor.

AC

NG → REPLACE A/C EVAPORATOR TEMPERATURE SENSOR

OK

3	CHECK HARNESS AND CONNECTOR (A/C AMPLIFIER - A/C EVAPORATOR TEMPERATURE SENSOR)

Air Conditioning Amplifier Connector Wire Harness View:

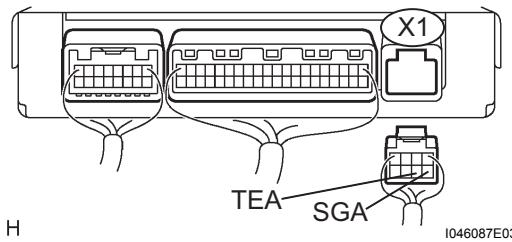

(a) Disconnect the connector from the air conditioning amplifier.

A/C Evaporator Temperature Sensor Connector Front View:

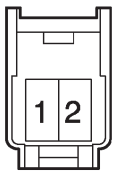

(b) Disconnect the connector from the A/C evaporator temperature sensor.
(c) Measure the resistance according to the value(s) in the table below.

Resistance

Tester connection	Condition	Specified condition
X1-6 (TEA) - 1	Always	Below 1 Ω
X1-5 (SGA) - 2	Always	Below 1 Ω
X1-6 (TEA) - Body ground	Always	10 kΩ or higher
X1-5 (SGA) - Body ground	Always	10 kΩ or higher

NG → REPAIR OR REPLACE HARNESS OR CONNECTOR

OK

REPLACE AIR CONDITIONING AMPLIFIER

AIR CONDITIONING SYSTEM

PRECAUTION

1. INITIALIZATION

NOTICE:

- **When disconnecting the negative (-) battery terminal, initialize the following system after the terminal is reconnected.**

System Name	See Procedure
Power Window Control	See page IN-29
Sliding Roof System	

- **Perform the RESET MEMORY (AT initialization) when replacing the automatic transaxle assembly, engine assembly or ECM (See page AX-15).**
- **Perform the REGISTRATION (VIN registration) when replacing the ECM (See page ES-19).**

HINT:

Initialization can not be completed by only removing the battery.

2. FOR USING INTELLIGENT TESTER

CAUTION:

Observe the following items for safety reasons:

- **Read its instruction books before using the tester.**
- **Prevent the tester cable from being caught on the pedals, shift lever and steering wheel when driving with the tester connected to the vehicle.**
- **When driving the vehicle for testing purposes using the tester, two persons are required. One is for driving the vehicle, and the other operates the tester.**

3. EXPRESSIONS OF IGNITION SWITCH

(a) The type of ignition switch used on this model differs according to the specifications of the vehicle. The expressions listed in the table below are used in this section.

Switch Type		Ignition Switch (position)	Engine Switch (condition)
Expression	Ignition Switch off	LOCK	Off
	Ignition Switch on (IG)	ON	On (IG)
	Ignition Switch on (ACC)	ACC	On (ACC)
	Engine Start	START	Start

4. FOR USING BATTERY DURING INSPECTION

(a) While using the battery during inspection, do not bring the positive and negative tester probes too close to each other as a short circuit may occur.

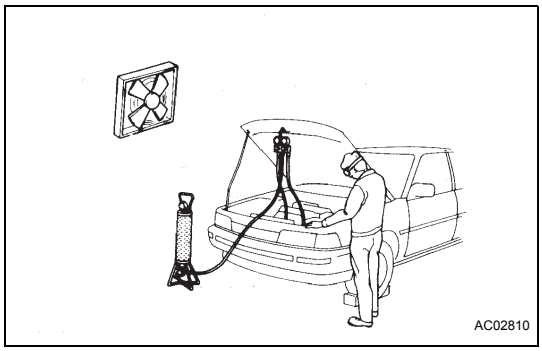

5. DO NOT HANDLE REFRIGERANT IN AN ENCLOSED AREA OR NEAR NAKED FLAME

(a) Do not handle the refrigerant in an enclosed area or near naked flame.

6. ALWAYS WEAR EYE PROTECTION

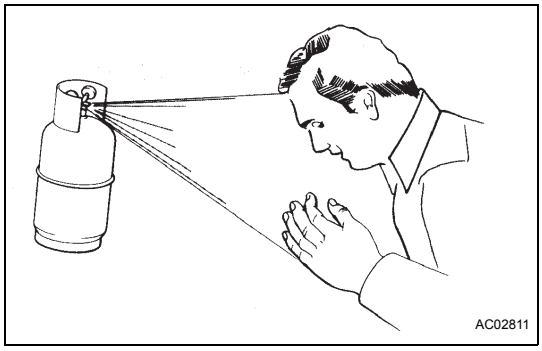

7. BE CAREFUL NOT TO GET LIQUID REFRIGERANT IN YOUR EYES OR ON YOUR SKIN

(a) If liquid refrigerant gets in your eyes or on your skin:
(1) Wash the area with lots of cool water.
CAUTION:
Do not rub your eyes or skin.
(2) Apply clean petroleum jelly to the skin.
(3) Go immediately to a physician or hospital for professional treatment.

8. NEVER HEAT THE CONTAINER OR EXPOSE IT TO NAKED FLAME

9. BE CAREFUL NOT TO DROP THE CONTAINER OR APPLY PHYSICAL SHOCKS TO IT

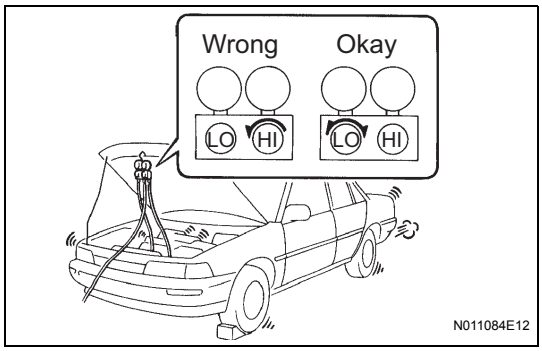

10. DO NOT OPERATE THE COMPRESSOR WITHOUT ENOUGH REFRIGERANT IN THE REFRIGERANT SYSTEM

(a) If there is not enough refrigerant in the refrigerant system, oil lubrication will be insufficient and compressor burnout may occur. Necessary care should be taken to avoid this.

11. DO NOT OPEN HIGH PRESSURE MANIFOLD VALVE WHILE COMPRESSOR IS OPERATING

(a) If the high pressure valves are opened, refrigerant flows in the reverse direction and could cause the charging cylinder to rupture. Open and close only the low pressure valve.

12. BE CAREFUL NOT TO OVERCHARGE SYSTEM WITH REFRIGERANT

(a) If refrigerant is overcharged, it causes problems such as insufficient cooling, poor fuel economy, engine overheating etc.

13. DO NOT OPERATE ENGINE AND COMPRESSOR WITH NO REFRIGERANT
CAUTION:
Doing so may damage the inside of the compressor because the compressor parts always move regardless of whether the A/C system is turned on or off.

14. SUPPLEMENTAL RESTRAINT SYSTEM (SRS)

(a) This vehicle is equipped with an SRS (Supplemental Restraint system) such as the driver, front passenger, side, curtain shield sir bags etc.. Failure to carry out service operation in the correct sequence could cause the SRS to unexpectedly deploy during servicing, possibly leading to a serious accident. Before servicing (including removal or installation of parts, inspection or replacement), be sure to read the precautionary notices (See page RS-1).

DTC	B1421/21	Solar Sensor Circuit (Passenger Side)

DESCRIPTION

The solar sensor is installed on the upper part of the instrument panel. The solar sensor detects the amount of solar radiation and controls the "AUTO" function of the air conditioner. The out put voltage of the solar sensor changes according to the amount decreases, the voltage increases. The air conditioning amplifier reads the output voltage from the solar sensor.

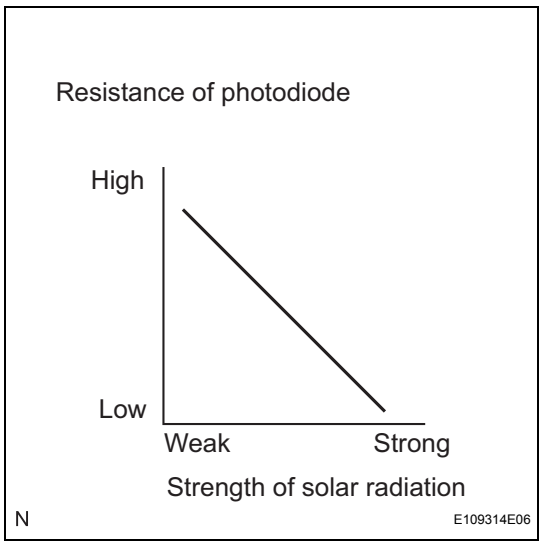

DTC No.	Detection Item	Trouble Area
B1421/21	Open or short in Solar sensor circuit. (If the check is performed in a dark place, DTC B1421/21 may be displayed.) (Passenger side)	• A/C solar sensor • Harness or connector between A/C solar sensor and A/C amplifier • A/C amplifier

WIRING DIAGRAM

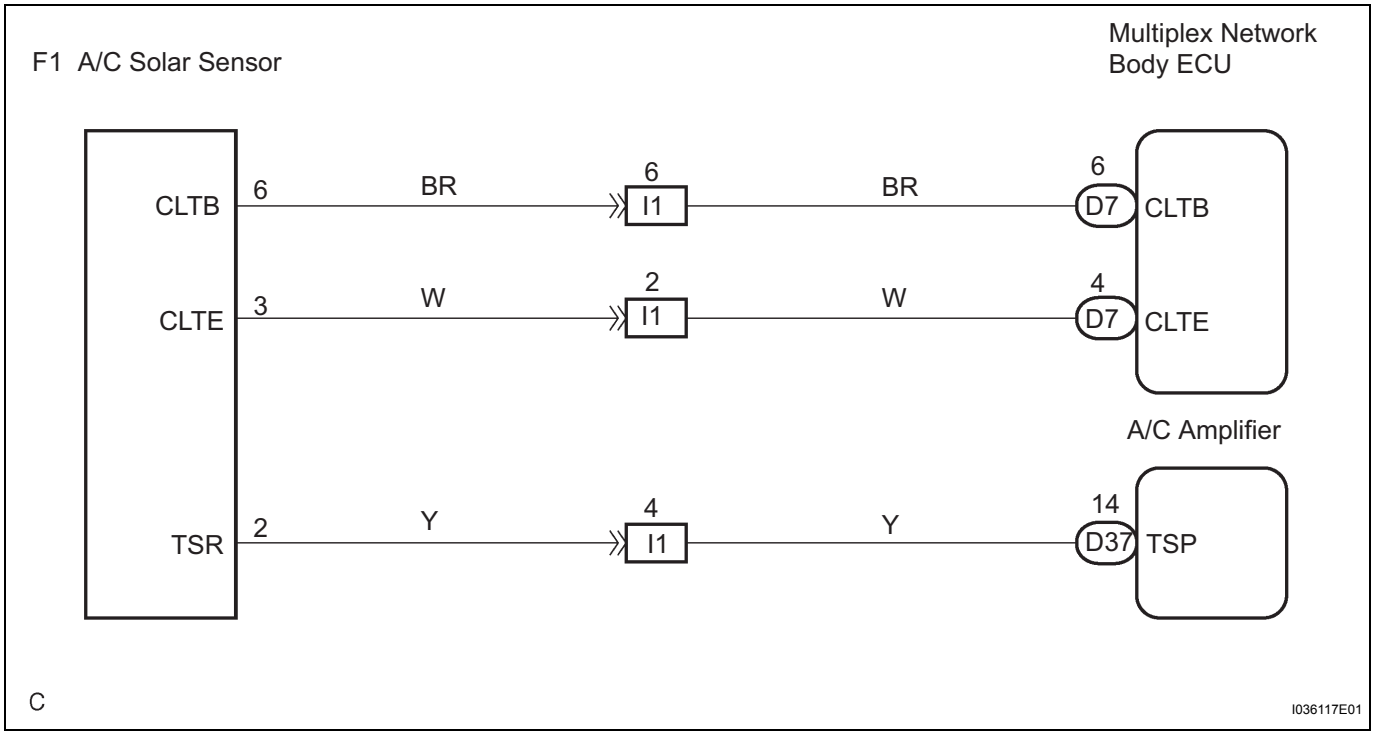

AC

INSPECTION PROCEDURE

1	READ VALUE OF INTELLIGENT TESTER

(a) Connect the intelligent tester to the DLC3.
(b) Turn the ignition switch on (IG) and push the intelligent tester main switch on.
(c) Select the item below in the DATA LIST, and read the display on the intelligent tester.

DATA LIST / AIR CONDITIONER:

Item	Measure Item / Display (Range)	Normal Condition	Diagnostic Note
SOLAR SENS-P	Solar sensor (Passenger side) / min.: 0 max.: 255	Increases as brightness increases	-

OK:

The display is as specified in the normal condition.

Result

Result	Proceed to
NG	A
OK (Checking from the PROBLEM SYMPTOM TABLE)	B
OK (Checking from the DTC)	C

B → **PROCEED TO NEXT CIRCUIT INSPECTION SHOWN IN PROBLEM SYMPTOMS TABLE**

C → **REPLACE AIR CONDITIONING AMPLIFIER**

A

2	INSPECT MULTIPLEX NETWORK BODY ECU

Multiplex Network Body ECU Connector Wire Harness View:

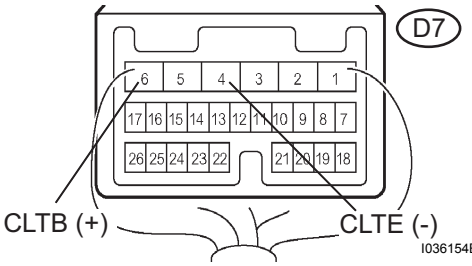

(a) Remove the multiplex network body ECU with
(b) Turn the ignition switch on (IG).
(c) Measure the voltage according to the value(s) in the table below.

Voltage

Tester connection (Symbols)	Condition	Specified condition
D7-6 (CLTB) - D7-4 (CLTE)	Ignition switch on (IG)	10 to 14 V

OK → **Go to step 4**

NG

3 CHECK HARNESS AND CONNECTOR

A/C Solar Sensor Connector Front View:

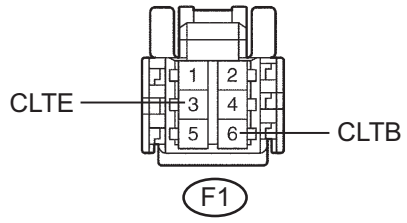

I036118E05

(a) Disconnect the connector from the A/C solar sensor.

Multiplex Network Body ECU Connector Wire Harness View:

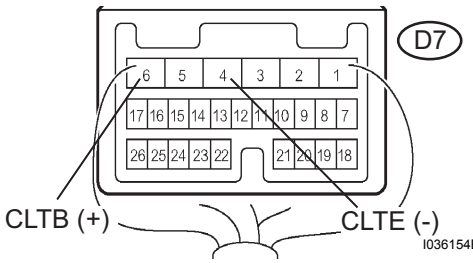

I036154E06

(b) Disconnect the connector from the multiplex network body ECU.

(c) Measure the resistance according to the value(s) in the table below.

Resistance

Tester connection (Symbols)	Condition	Specified condition
F1-6 (CLTB) - D7-6 (CLTB)	Always	Below 1 Ω
F1-3 (CLTE) - D7-4 (CLTE)	Always	Below 1 Ω
F1-6 (CLTB) - Body ground	Always	10 kΩ or higher
F1-3 (CLTE) - Body ground	Always	10 kΩ or higher

NG → **REPAIR OR REPLACE HARNESS OR CONNECTOR**

OK

REPLACE MULTIPLEX NETWORK BODY ECU

4 CHECK HARNESS AND CONNECTOR

A/C Solar Sensor Connector Wire Harness View:

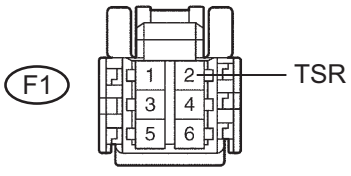

I036118E06

(a) Disconnect the connector from A/C solar sensor.

AC

Air Conditioning Amplifier Wire Harness View:

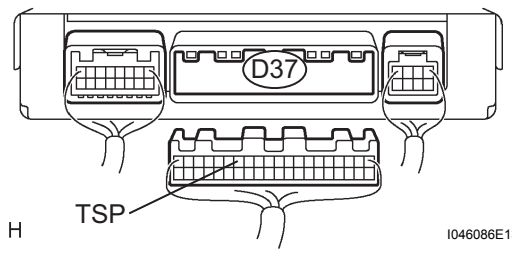

(b) Disconnect the connector from the A/C amplifier.
(c) Measure the resistance according to the value(s) in the table below.

Resistance

Tester connection (Symbols)	Condition	Specified condition
D37-14 (TSP) - F1-2 (TSR)	Always	Below 1 Ω
D37-14 (TSP) - Body ground	Always	10 kΩ or higher

NG → **REPAIR OR REPLACE HARNESS OR CONNECTOR**

OK

5 INSPECT A/C SOLAR SENSOR

A/C Solar Sensor Connector From Back Side:

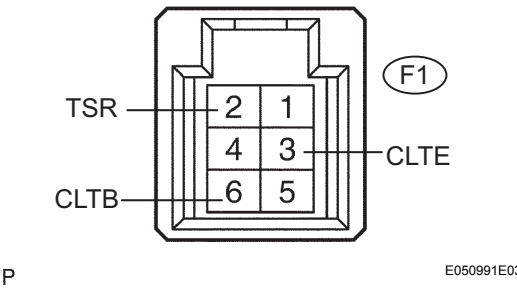

(a) Remove the A/C solar sensor.
(b) Apply Battery voltage between terminals F1-3 (CLTE) and F1-6 (CLTB) of the A/C solar sensor.
(c) Measure the voltage according to the value(s) in the table below.

Voltage

Tester connection (Symbols)	Condition	Specified condition
F1-2 (TSR) - F1-32 (CLTE)	Sensor is subject to electric light	4.0 to 4.6 V
F1-2 (TSR) - F1-32 (CLTE)	Sensor is covered with a cloth	Below 0.8 V

NOTICE:

- **The connection procedure for using a digital tester such as a TOYOTA electrical tester is shown above. When using an analog tester, connect the positive (+) lead to terminal 2 and negative (-) lead to terminal 1 of the solar sensor.**
- **While using the battery during inspection, do not bring the positive and negative tester probes too close to each other as a short circuit may occur.**

HINT:

- As the inspection light is moved away from the sensor the voltage increases.
- Use an incandescent lamp for inspection. Bring it within 30 cm (11.8 in.) of the solar sensor.

NG → **REPLACE A/C SOLAR SENSOR**

OK

REPLACE AIR CONDITIONING AMPLIFIER

AC

DTC	B1422/22	Compressor Lock Sensor Circuit

DESCRIPTION

The ECM sends the engine speed signal to the TACO terminal of the A/C amplifier. The A/C amplifier reads the difference between compressor speed and engine speed. When the difference becomes too big, the A/C amplifier determines that the compressor locks, and turns the magnetic clutch off.

DTC No.	DTC Detection Condition	Trouble Area
B1422/22	Compressor lock sensor circuit (Open or short)	• A/C lock sensor (w/ magnet clutch compressor assembly) • Compressor drive belt • Harness and connector between A/C amplifier and ECM • Harness and connector between A/C lock sensor (w/ magnet clutch compressor assembly) and A/C amplifier • ECM • A/C amplifier

WIRING DIAGRAM

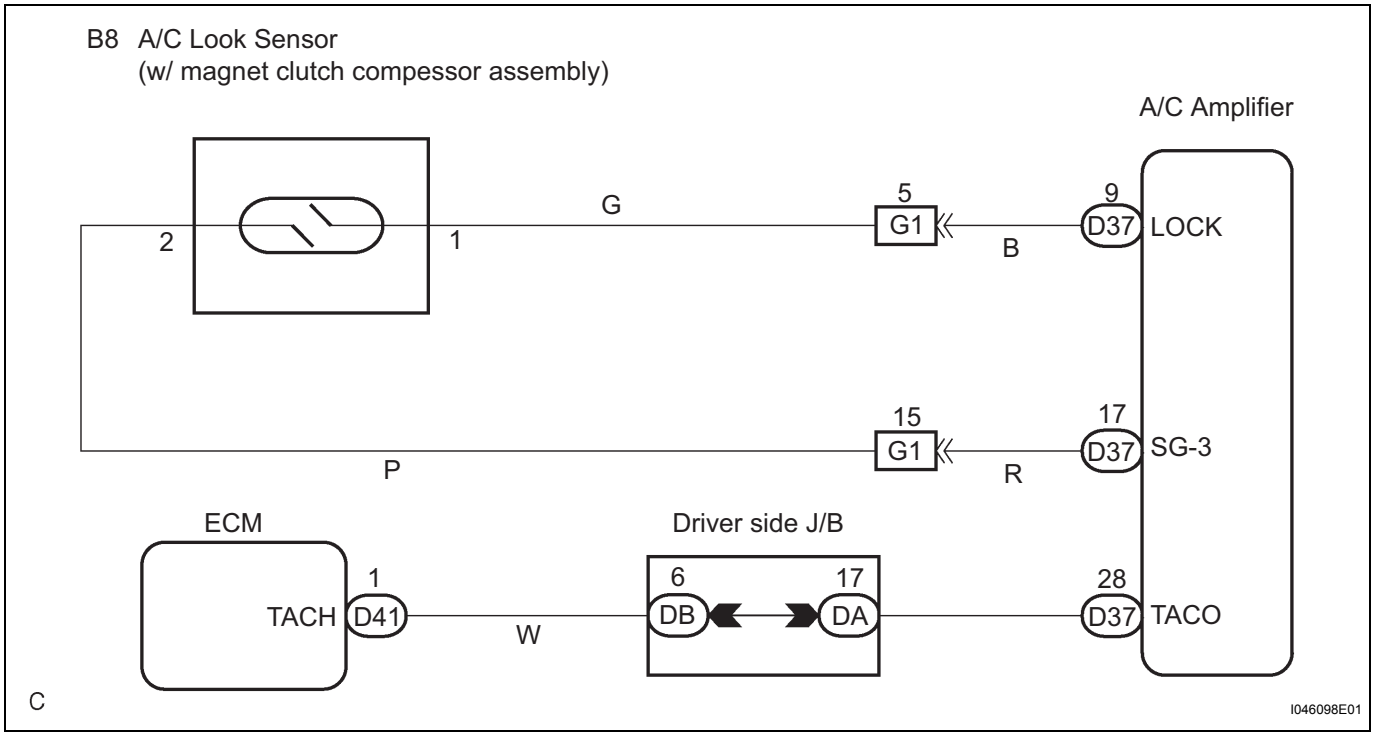

INSPECTION PROCEDURE

1 INSPECT AIR CONDITIONING AMPLIFIER

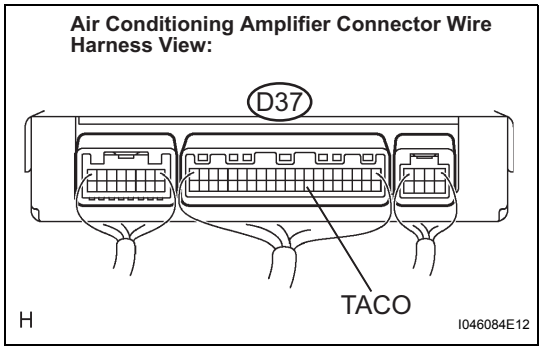

(a) Remove the A/C amplifier with connectors still connected.
(b) Start the engine and press the A/C switch.

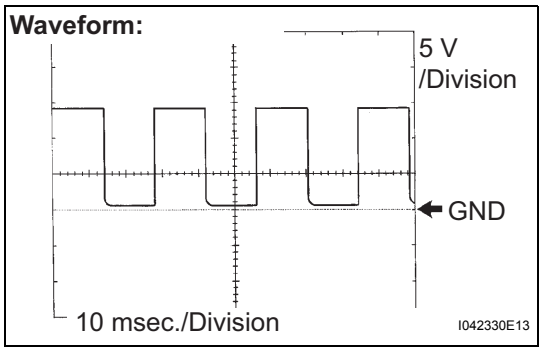

(c) Measure the waveform according to the condition in the table below.

Standard

Tester connection (Symbols)	Condition	Specified condition
D37-28 (TACO) - Body ground	Engine running A/C switch: ON	Pulse generation (See waveform)

OK:
Wave form appears as shown in the illustration.

OK	Go to step 3

NG

2 CHECK HARNESS AND CONNECTOR (ECM - AIR CONDITIONING AMPLIFIER)

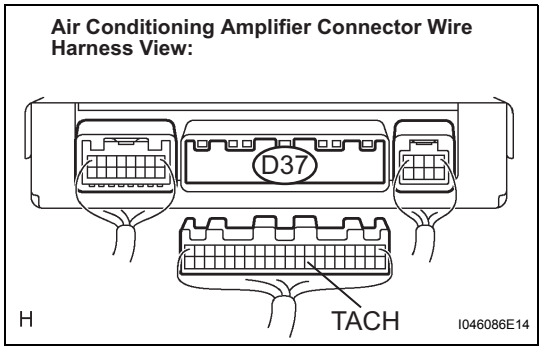

(a) Disconnect the connector from A/C amplifier.

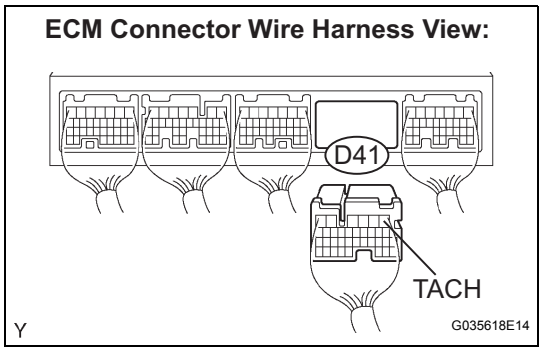

(b) Disconnect the connector from the ECM.
(c) Measure the resistance according to the value(s) in the table below.

Standard

Tester connection (Symbols)	Condition	Specified condition
D37-28 (TACO) - D41-1 (TACH)	Always	Below 1 Ω
D37-28 (TACO) - Body ground	Always	10 kΩ or higher

AC

NG → REPAIR OR REPLACE HARNESS OR CONNECTOR

OK

GO TO SFI SYSTEM

3 INSPECT AIR CONDITIONING AMPLIFIER (LOCK - SG-3)

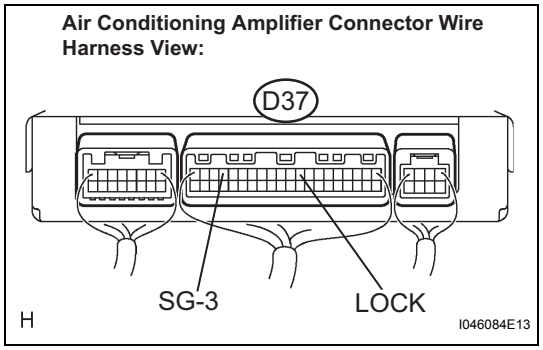

(a) Remove the A/C amplifier with connectors still connected.
(b) Start the engine and press the AUTO switch.

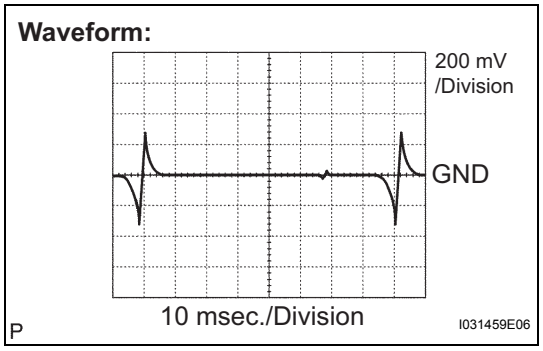

(c) Measure the waveform according to the condition in the table below.

Standard

Tester connection (Symbols)	Condition	Specified condition
D37-9 (LOCK) - D37-17 (SG-3)	Engine running Magnetic clutch ON Blower switch: ON	Pulse generation (See waveform)

Result

Result	Proceed to
NG	A
OK (Checking from the PROBLEM SYMPTOMS TABLE)	B
OK (Checking from the DTC)	C

B → PROCEED TO NEXT CIRCUIT INSPECTION SHOWN IN PROBLEM SYMPTOMS TABLE

C → REPLACE AIR CONDITIONING AMPLIFIER

A

4	INSPECT A/C LOCK SENSOR (W/ MAGNET CLUTCH COMPRESSOR ASSEMBLY)

A/C Lock Sensor Connector Front View:

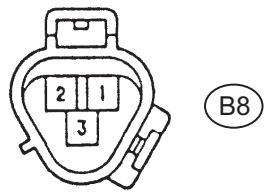

Ie–3–2 E005280E12

(a) Disconnect the A/C lock sensor (w/ magnet clutch compressor assembly) connector.
(b) Measure the resistance according to the value(s) in the table below/

Resistance

Tester connection	Condition	Specified condition
D37-28 (TACO) - D41-1 (TACH)	at 20°C (68°F)	160 to 320 Ω

NG → REPLACE A/C LOCK SENSOR (W/ MAGNET CLUTCH COMPRESSOR ASSEMBLY)

OK

5	CHECK HARNESS AND CONNECTOR (A/C LOCK SENSOR - AIR CONDITIONING AMPLIFIER)

Wire Harness Side Connector Front View:

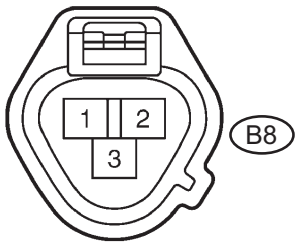

P E051630E04

(a) Disconnect the connector from A/C lock sensor (w/ magnet clutch compressor assembly)

Air Conditioning Amplifier Connector Wire Harness View:

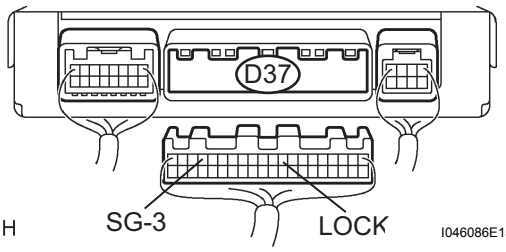

H I046086E15

(b) Disconnect the connector from the A/C amplifier.
(c) Measure the resistance according to the value(s) in the table below.

Standard

Tester connection (Symbols)	Condition	Specified condition
D37-9 (LOCK) - B8-1	Always	Below 1 Ω
D37-17 (SG-3) - B8-2	Always	Below 1 Ω
D37-9 (LOCK) - Body ground	Always	10 kΩ or higher
D37-17 (SG-3) - Body ground	Always	10 kΩ or higher

NG → REPAIR OR REPLACE HARNESS OR CONNECTOR

OK

REPLACE AIR CONDITIONING AMPLIFIER

AC

DTC	B1423/23	Pressure Switch Circuit

DESCRIPTION

This DTC is output when refrigerant pressure is extremely low (0.19 MPa (2.0 kgf/cm^2, 28 psi) or less) or extremely high (3.14 MPa (32.0 kgf/cm^2, 455 psi) or more). The pressure sensor, which is installed on the pipe of the high pressure side to detect refrigerant pressure, outputs the refrigerant pressure signal to the air conditioning amplifier. The air conditioning amplifier converts the signals into pressure according to the sensor characteristics to control the compressor.
HINT:
Be sure to check the refrigerant volume first when this DTC is output because this DTC can also be output if there is no refrigerant in the cycle.

DTC No.	Detection Item	Trouble Area
B1423/23	• Pressure switch circuit (open or short) • Abnormal refrigerant pressure below 196 kPa (2.6 kgf/cm^2, 28 psi) over 3.140 kPa (32.0 kgf/cm^2, 455 psi) below 190 kPa (2.0 kgf/cm^2, 28 psi) over 3,140 kPa (32.0 kgf/cm^2, 455 psi)	• A/C Pressure sensor • Harness or connector between A/C pressure sensor and A/C amplifier • Refrigerant pipe line • A/C amplifier

WIRING DIAGRAM

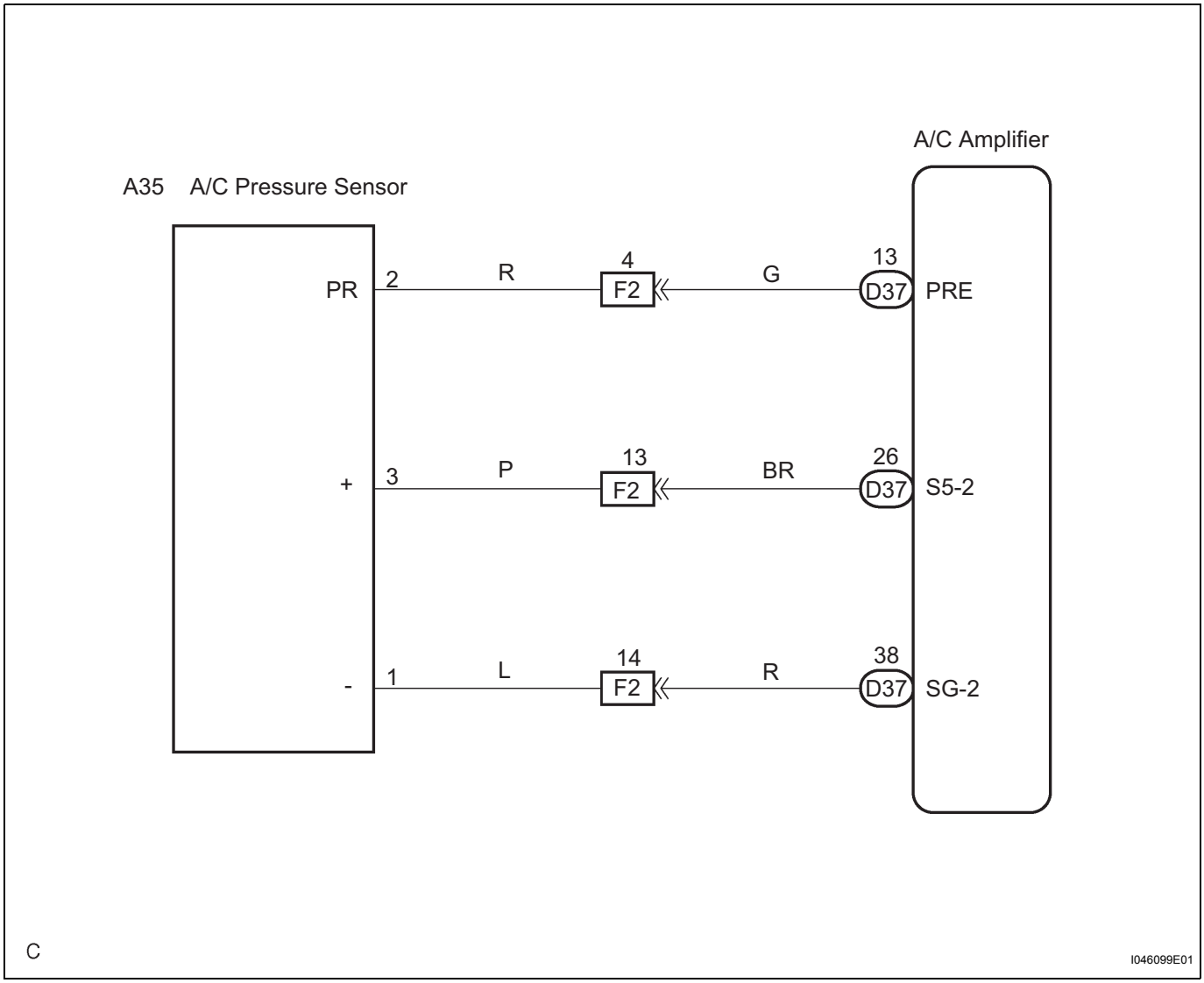

AC

INSPECTION PROCEDURE

1 INSPECT REFRIGERANT PRESSURE

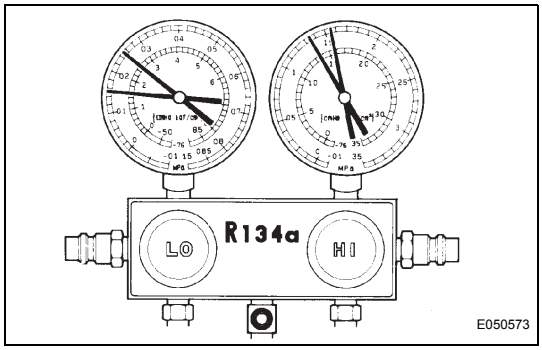

(a) Set the manifold gauge (See page AC-134).
(b) Read the manifold gauge pressure when the following conditions are established.
(1) Prepare the vehicle according to the chart below.

Item	Condition
R/F Switch	RECIRC (30 to 35°C (86 to 95°F))
Vehicle Doors	Fully open
Temperature Setting	MAX COLD
Blower Speed	HI
A/C	ON

Standard:

Low pressure side:

0.15 to 0.25 MPa (1.5 to 2.5 kgf/cm^2, 21.3 to 35.6 psi)

High pressure side:

1.37 to 1.57 MPa (14 to 16 kgf/cm^2, 199 to 228 psi)

NG → **CHARGE REFRIGERANT**

OK

2 READ VALUE OF INTELLIGENT TESTER

(a) Connect the intelligent tester to DTC3.
(b) Turn the ignition switch on (IG) and push the intelligent tester main switch on.
(c) Select the items below in the DATA LIST, and read the displays on the intelligent tester.

Item	Measurement Item / Display (Range)	Normal Condition	Diagnostic Note
REG PRESS SENS	Regulator pressure sensor / min.: 0 max.: 255	Actual regulator pressure is displayed	-

OK:

The display is as specified in the normal condition.

Result

Result	Proceed to
NG	**A**
OK (Checking from the PROBLEM SYMPTOMS TABLE)	**B**
OK (Checking from the DTC)	**C**

B → **PROCEED TO NEXT CIRCUIT INSPECTION SHOWN IN PROBLEM SYMPTOMS TABLE**

C → **REPLACE AIR CONDITIONING AMPLIFIER**

AC

A

3	CHECK HARNESS AND CONNECTOR (AIR CONDITIONING AMPLIFIER - A/C PRESSURE SENSOR)

Air Conditioning Amplifier Connector Wire Harness View:

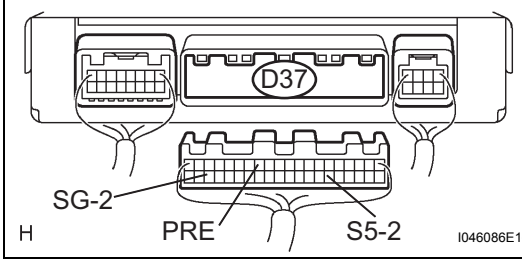

(a) Disconnect the connector from A/C amplifier.

A/C Pressure Sensor Connector Wire Harness View:

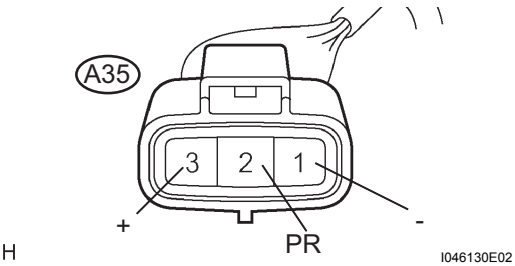

(b) Disconnect the connector from the A/C pressure sensor.
(c) Measure the resistance according to the value(s) in the table below.

Resistance

Tester Connection (Symbols)	Condition	Specified Condition
A35-2 (PR) - D37-13 (PRE)	Always	Below 1 Ω
A35-3 (+) - D37-26 (S5-2)	Always	Below 1 Ω
A35-1 (-) - D37-28 (SG-2)	Always	Below 1 Ω
D37-13 (PRE) - Body ground	Always	10 kΩ or higher
D37-26 (S5-2) - Body ground	Always	10 kΩ or higher
D37-28 (SG-2) - Body ground	Always	10 kΩ or higher

NG → REPAIR OR REPLACE HARNESS OR CONNECTOR

OK

4	INSPECT AIR CONDITIONING AMPLIFIER (S5-2 - SG-2)

Air Conditioning Amplifier Connector Wire Harness View:

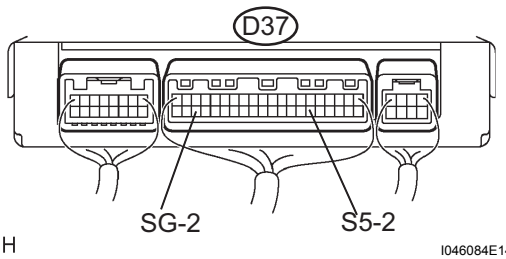

(a) Remove the A/C amplifier.
(b) Reconnect the connector to the A/C amplifier.
(c) Measure the voltage according to the value(s) in the table below.

Voltage

Tester Connection (Symbols)	Condition	Specified Condition
D37-26 (S5-2) - D37-38 (SG-2)	Ignition switch on (IG)	4.5 to 5.5 V
D37-26 (S5-2) - D37-38 (SG-2)	Ignition switch off	Below 1 V

NG → REPLACE AIR CONDITIONING AMPLIFIER

AC

OK

5	INSPECT A/C PRESSURE SENSOR

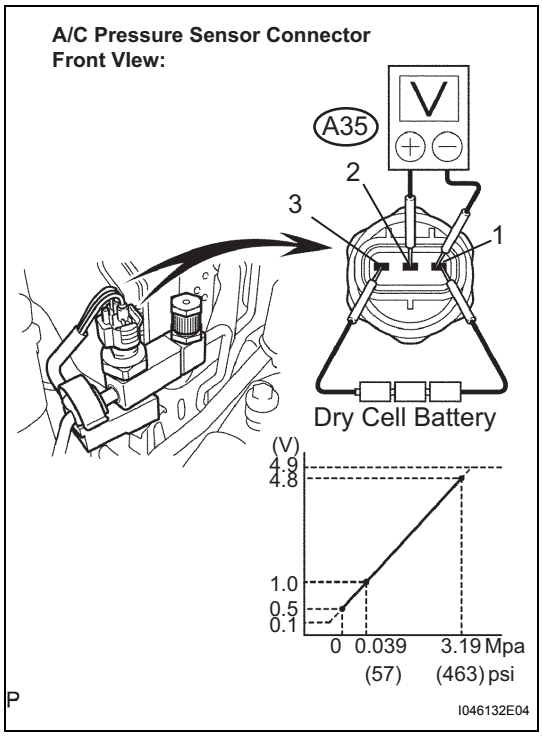

(a) Start the engine.
(b) Operate the air conditioning system.
(c) Disconnect the connector from A/C pressure sensor.
(d) Install the manifold gauge set (See page AC-134).
(e) Connect the positive (+) lead from the three 1.5 V dry cell batteries to terminal 3 and negative (-) lead to terminal 1.
(f) Check the voltage between terminals 2 and 1 of A/C pressure sensor.

Voltage:

The voltage depends on the refrigerant pressure as shown in the chart.

NG → **REPLACE A/C PRESSURE SENSOR**

OK

REPLACE AIR CONDITIONING AMPLIFIER

DTC	B1424/24	Solar Sensor Circuit (Driver Side)

DESCRIPTION

The solar sensor is installed on the upper part of the instrument panel. The solar sensor detects the amount of solar radiation and controls the "AUTO" function of the air conditioner. The out put voltage of the solar sensor changes according to the amount decreases, the voltage increases. The air conditioning amplifier reads the output voltage from the solar sensor.

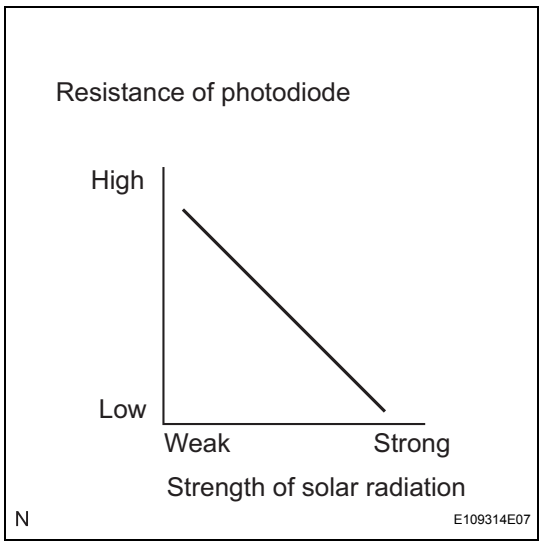

DTC No.	Detection Item	Trouble Area
B1424/24	Open or short in Solar sensor circuit. (If the check is performed in a dark place, DTC B1424/24 may be displayed.) (Driver side)	• A/C solar sensor • Harness or connector between A/C solar sensor and A/C amplifier • A/C amplifier

WIRING DIAGRAM

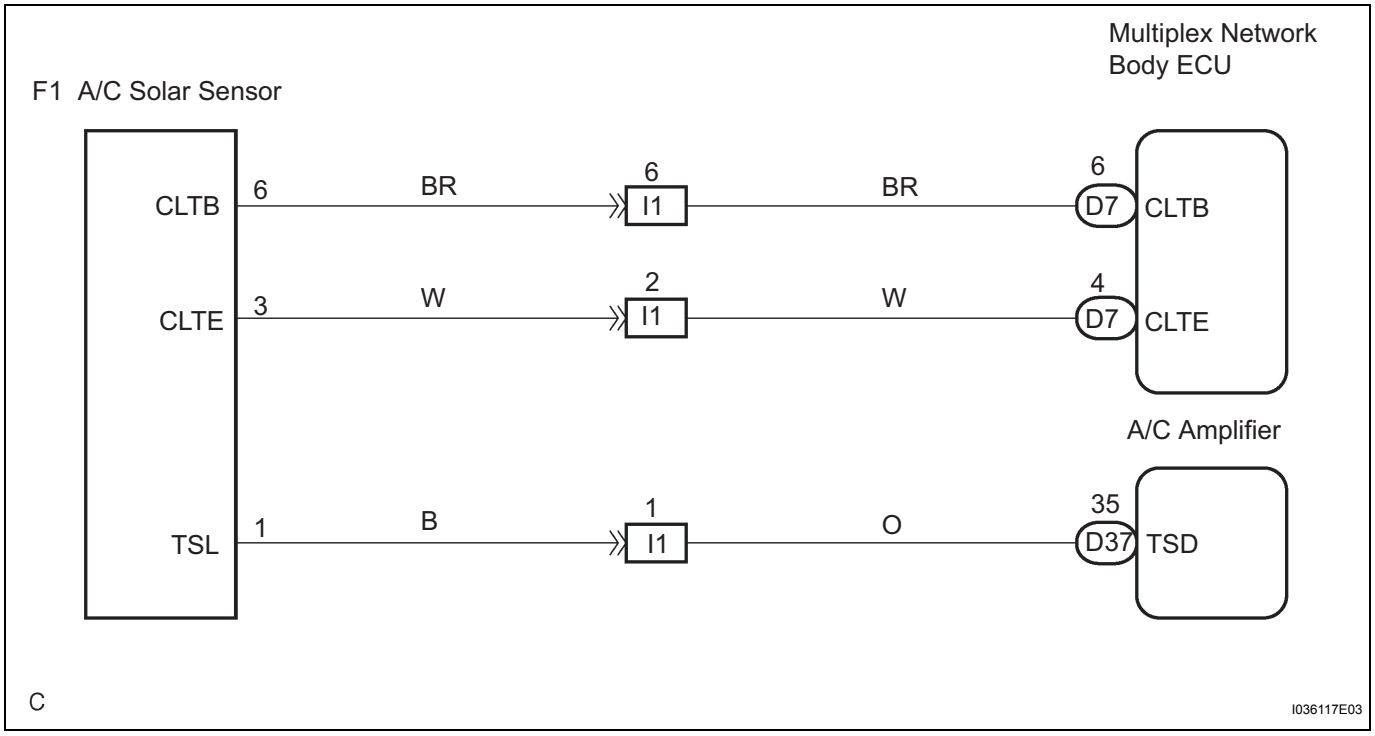

AC

INSPECTION PROCEDURE

1	READ VALUE OF INTELLIGENT TESTER

(a) Connect the intelligent tester to the DLC3.
(b) Turn the ignition switch on (IG) and push the intelligent tester main switch on.
(c) Select the item below in the DATA LIST, and read the display on the intelligent tester.

DATA LIST / AIR CONDITIONER:

Item	Measurement Item / Display (Range)	Normal Condition	Diagnostic Note
SOLAR SENS-D	Solar sensor (Driver side) / min.: 0 max.: 255	Increases as brightness increases	-

OK:
The display is as specified in the normal condition.

Result

Result	Proceed to
NG	A
OK (Checking from the PROBLEM SYMPTOMS TABLE)	B
OK (Checking from the DTC)	C

B → **PROCEED TO NEXT CIRCUIT INSPECTION SHOWN IN PROBLEM SYMPTOMS TABLE**

C → **REPLACE AIR CONDITIONING AMPLIFIER**

A

2	INSPECT MULTIPLEX NETWORK BODY ECU (CLTB - CLTE)

Multiplex Network Body ECU Connector Wire Harness View:

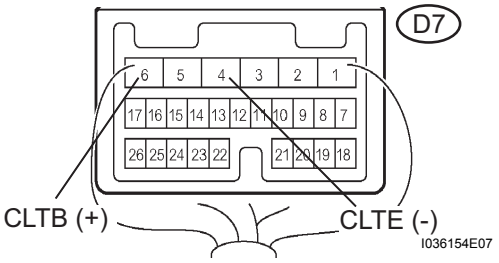

(a) Remove the multiplex network body ECU with connectors sill connected.
(b) Turn the ignition switch on (IG).
(c) Measure the voltage according to the value(s) table below.

Voltage

Tester Connection (Symbols)	Condition	Specified Condition
D7-6 (CLTB) - D7-4 (CLTE)	Ignition switch on (IG)	10 to 14 V

OK → **Go to step 4**

NG

3	CHECK HARNESS AND CONNECTOR (MULTIPLEX NETWORK BDY ECU - A/C SOLAR SENSOR)

A/C Solar Sensor Connector Front View:

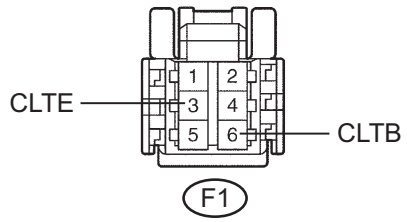

I036118E07

(a) Disconnect the connector from the A/C solar sensor.

Multiplex Network Body ECU Connector Wire Harness View:

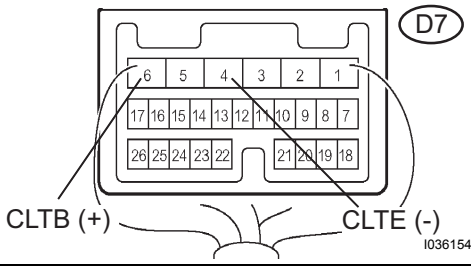

I036154E08

(b) Disconnect the connector from the multiplex network body ECU.

(c) Measure the resistance according to the value(s) table below.

Resistance

Tester Connection (Symbols)	Condition	Specified Condition
F1-6 (CLTB) - D7-6 (CLTB)	Always	Below 1 Ω
F1-3 (CLTE) - D7-4 (CLTE)	Always	Below 1 Ω
F1-6 (CLTB) - Body ground	Always	10 kΩ or higher
F1-3 (CLTE) - Body ground	Always	10 kΩ or higher

NG → REPAIR OR REPLACE HARNESS OR CONNECTOR

OK

REPLACE MULTIPLEX NETWORK BODY ECU

4	CHECK HARNESS AND CONNECTOR (AIR CONDITIONING AMPLIFIER - A/C SOLAR SENSOR)

A/C Solar Sensor Connector Wire Harness View:

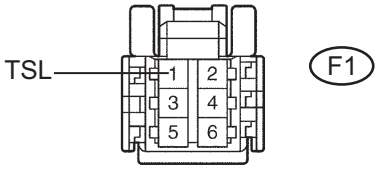

I036118E08

(a) Disconnect the connector from the A/C solar sensor.

AC

Air Conditioning Amplifier Wire Harness View:

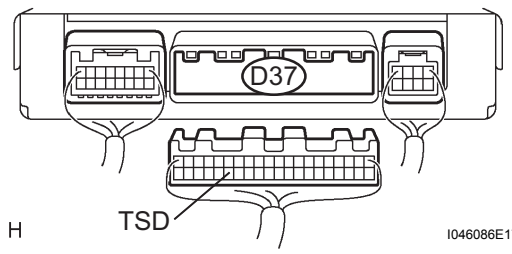

(b) Disconnect the connector from the A/C amplifier.
(c) Measure the resistance according to the value(s) table below.

Resistance

Tester Connection (Symbols)	Condition	Specified Condition
D37-35 (TSD) - F1-1 (TSL)	Always	Below 1 Ω
D37-35 (TSD) - Body ground	Always	10 kΩ or higher

NG → **REPAIR OR REPLACE HARNESS OR CONNECTOR**

OK

5 INSPECT A/C SOLAR SENSOR

A/C Solar Sensor Connector From Back Side:

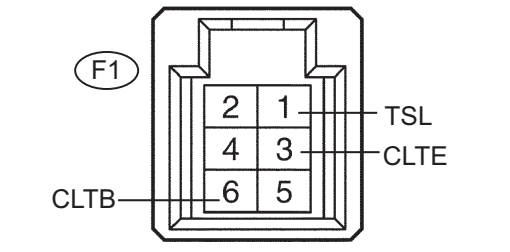

(a) Remove the A/C solar sensor.
(b) Apply battery voltage between terminals F1-3 (CLTE) and F1-6 (CLTB) of the A/C solar sensor.
(c) Measure the voltage according to the value(s) table below.

Voltage

Tester Connection (Symbols)	Condition	Specified Condition
F1-1 (TSL) - F1-3 (CLTE)	Sensor is subject to electric light	4.0 to 4.6 V
F1-1 (TSL) - F1-3 (CLTE)	Sensor is subject to electric light	Below 0.8 V

NOTICE:

- **The connection procedure for using a digital tester such as a TOYOTA electrical tester is shown above. when using an analog tester, connect the positive (+) lead to terminal 2 and negative (-) lead to terminal 1 of the solar sensor.**
- **While using the battery during inspection, do not bring the positive and negative tester probes too close to each other as a short circuit may occur.**

HINT:

- As the inspection light is moved away from the sensor, the voltage increases.
- Use an incandescent light for inspection. Bring it within 30 cm (11.8 in.) of the solar sensor.

NG → **REPLACE A/C SOLAR SENSOR**

OK

REPLACE AIR CONDITIONING AMPLIFIER

DTC	B1441/41	Air Mix Damper Control Servo Motor Circuit (Passenger Side)

DESCRIPTION

The air mix damper servo sends pulse signals to inform the A/C amplifier of the damper position. The A/C amplifier activates the motor (normal, reverse) based on the signals to move the air mix damper (passenger seat) to any position, which adjusts the amount of air passing the heater core after passing the evaporator to control the blowing temperature.

HINT:

Confirm that no mechanical problem is present because this diagnostic code can be out put when either a damper link or damper is mechanically locked.

DTC No.	Detection Item	Trouble Area
B1441/41	Air mix damper position sensor value does not change even if air conditioner amplifier assembly operates air mix servo motor.	• Air mix control servo motor • Air conditioning harness assembly • A/C amplifier

WIRING DIAGRAM

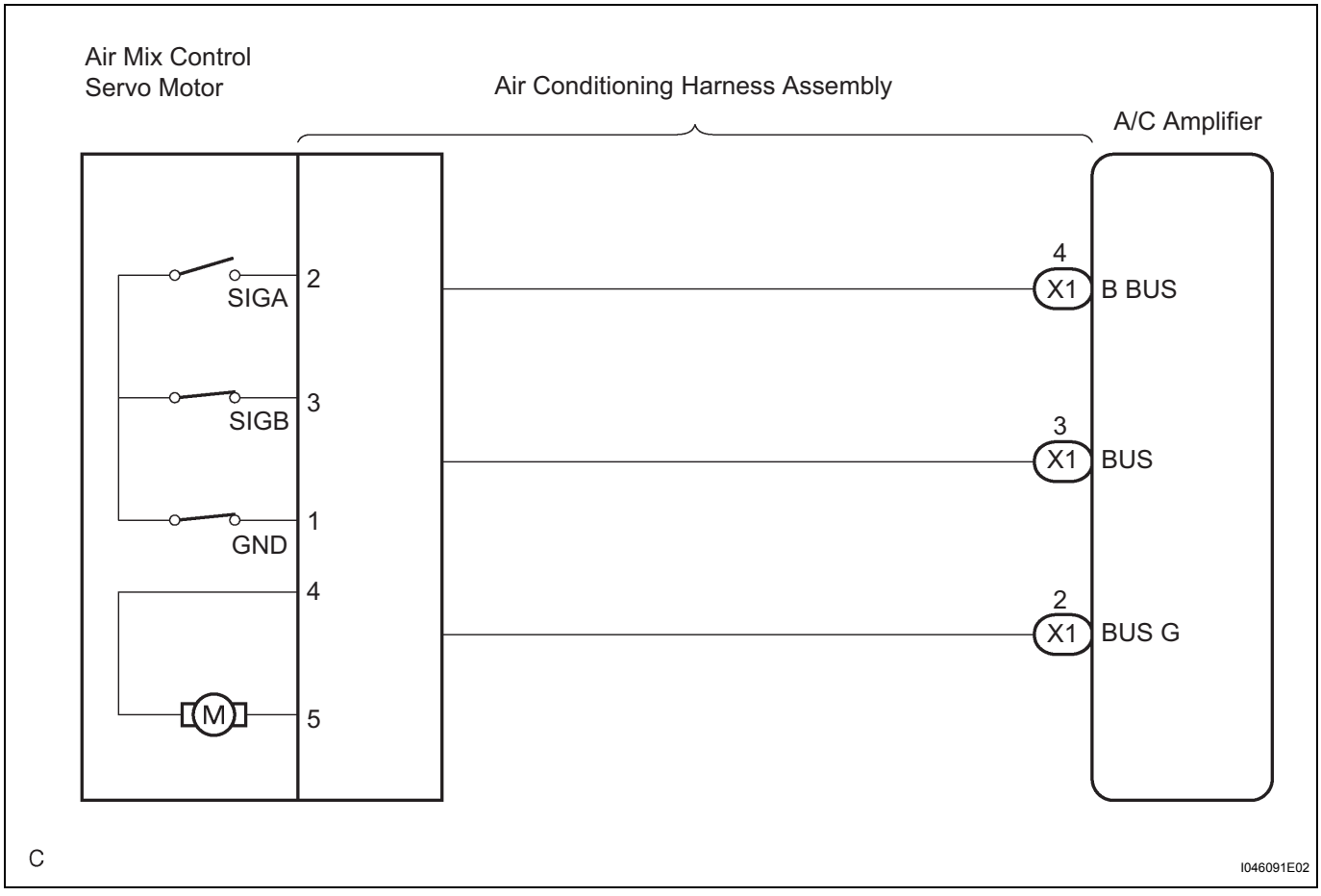

INSPECTION PROCEDURE

1	READ VALUE OF INTELLIGENT TESTER

(a) Connect the intelligent tester to DLC3.

AC

(b) Turn the ignition switch on (IG) and push the intelligent tester main switch on.
(c) Select the items below in the DATA LIST, and read the displays on the intelligent tester.

DATA LIST / AIR CONDITIONER:

Item	Measurement Item / Display (Range)	Normal Condition	Diagnostic Note
AIR MIX PULSE-P	Air mix servo motor target pulse (Passenger side) / min.: 0 max.: 255	Damper is at "MAX. COOL": 105 (pulse) Damper is at "MAX. HOT": 7 (pulse)	-

OK:

The display is as specified in the normal condition.

Result

Result	Proceed to
NG	A
OK (Checking from the PROBLEM SYMPTOMS TABLE)	B
OK (Checking from the DTC)	C

B → **PROCEED TO NEXT CIRCUIT INSPECTION SHOWN IN PROBLEM SYMPTOMS TABLE**

C → **REPLACE AIR CONDITIONING AMPLIFIER**

A

2 REPLACE AIR MIX CONTROL SERVO MOTOR

HINT:
Since the servo motor cannot be inspected while it is removed from the vehicle, replace the servo motor with a normal one and check that the condition returns to normal.

NG

REPLACE AIR CONDITIONING HARNESS ASSEMBLY

DTC	B1442/42	Air Inlet Damper Control Servo Motor Circuit

DESCRIPTION

The damper servo (air inlet control) sends pulse signals to inform the A/C amplifier of the damper position. The A/C amplifier activates the motor (normal, reverse) based on the signals to move the air inlet mode selection air inlet control damper to any position, which controls the intake air used as FRESH, FRESH/ RECIRCULATION and RECIRCULATION.

HINT:

Confirm that no mechanical problem is present because this diagnostic code can be output when either a damper link or damper is mechanically locked.

DTC No.	Detection Item	Trouble Area
B1442/42	Air inlet damper position sensor value does not change even if air conditioner amplifier operates air inlet damper control servo motor.	• Air inlet control servo motor • Air conditioning harness assembly • A/C amplifier

WIRING DIAGRAM

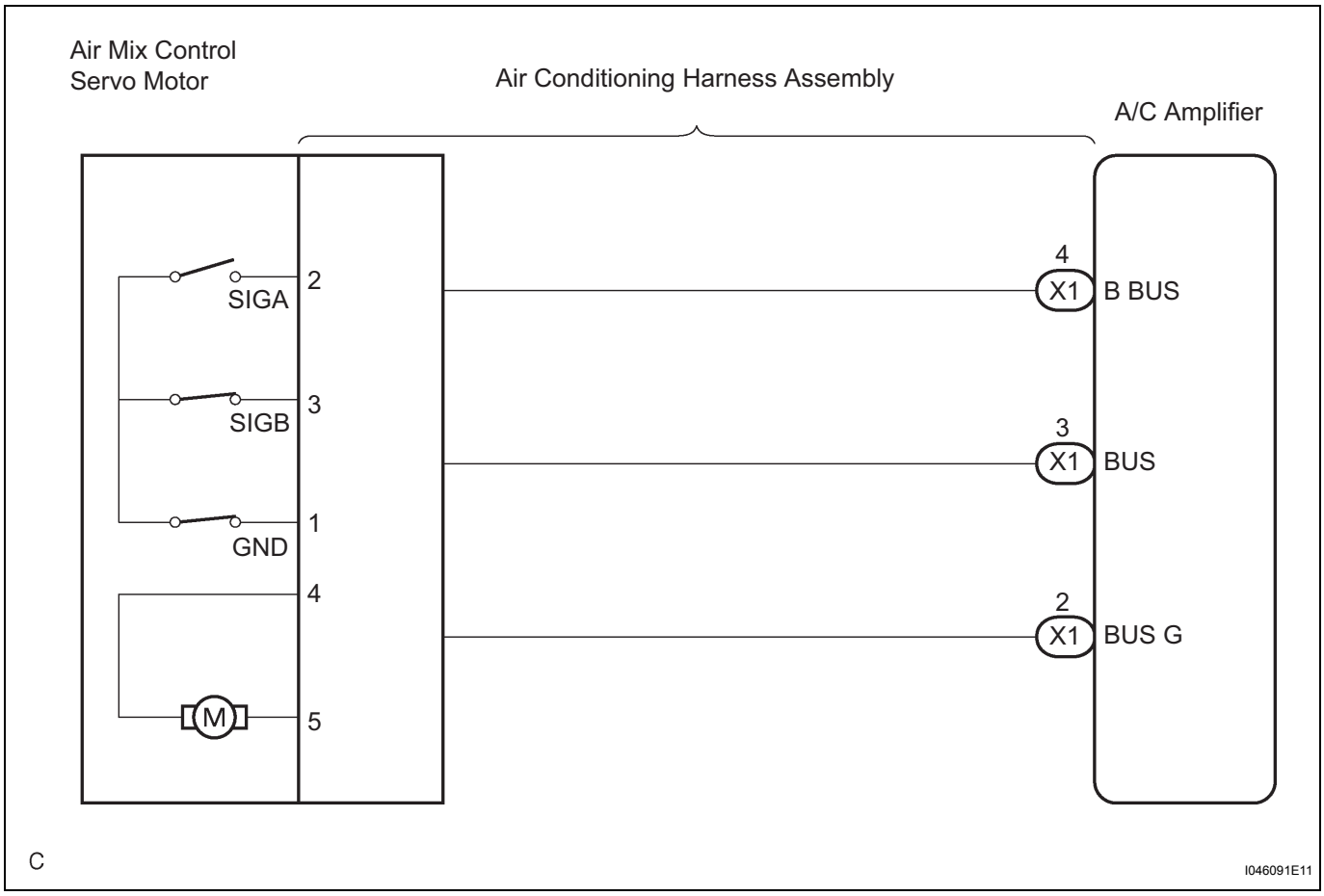

INSPECTION PROCEDURE

1	READ VALUE OF INTELLIGENT TESTER

AC

(a) Connect the intelligent tester to DLC3.
(b) Turn the ignition switch on (IG) and push the intelligent tester main switch on.

(c) Select the items below in the DATA LIST, and read the displays on the intelligent tester.

DATA LIST / AIR CONDITIONER:

Item	Measurement Item / Display (Range)	Normal Condition	Diagnostic Note
A/I DAMP PLS	Air inlet damper target pulse / min.: 0 max.: 255	Damper is at "RECIRCULATION": 7 (pulse) Damper is at "FRESH": 28 (pulse)	-

OK:

The display is as specified in the normal condition.

Result

Result	Proceed to
NG	A
OK (Checking from the PROBLEM SYMPTOMS TABLE)	B
OK (Checking from the DTC)	C

B → **PROCEED TO NEXT CIRCUIT INSPECTION SHOWN IN PROBLEM SYMPTOMS TABLE**

C → **REPLACE AIR CONDITIONING AMPLIFIER**

A

2 REPLACE AIR INLET CONTROL SERVO MOTOR

HINT:
Since the servo motor cannot be inspected while it is removed from the vehicle, replace the servo motor with a normal one and check that the condition returns to normal.

NG

REPLACE AIR CONDITIONING HARNESS ASSEMBLY

DTC	B1443/43	Air Outlet Damper Control Servo Motor Circuit

DESCRIPTION

The mode damper servo sends pulse signals to inform the A/C amplifier of the damper position. The A/C amplifier activates the motor (normal, reverse) based on the signals to move the mode damper to any position, which controls the air outlet switching.
HINT:
Confirm that no mechanical problem is present because this diagnostic code can be output when either a damper link or damper is mechanically locked.

DTC No.	Detection Item	Trouble Area
B1443/43	Air outlet damper position sensor value does not change even if air conditioner amplifier operates air outlet damper control servo motor.	• Air outlet control servo motor • Air conditioning harness assembly • A/C amplifier

WIRING DIAGRAM

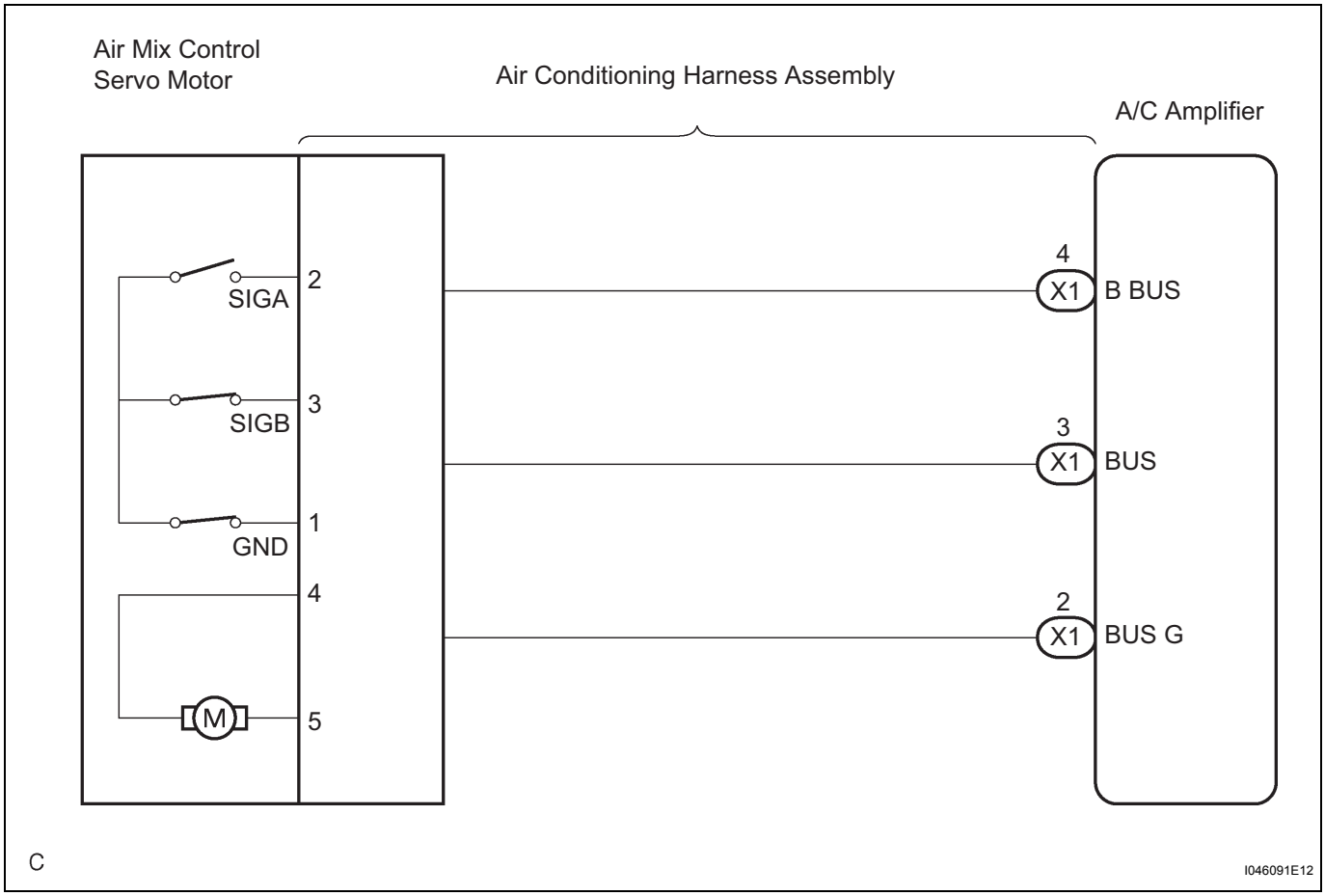

INSPECTION PROCEDURE

1	READ VALUE OF INTELLIGENT TESTER

(a) Connect the intelligent tester to DLC3.
(b) Turn the ignition switch on (IG) and push the intelligent tester main switch on.

AC

(c) Select the items below in the DATA LIST, and read the displays on the intelligent tester.

DATA LIST / AIR CONDITIONER:

Item	Measurement Item / Display (Range)	Normal Condition	Diagnostic Note
AIR OUT PULSE-D	Air outlet servo motor target pulse (Driver side) / min.: 0 max.: 255	Damper is at "FACE": 8 (pulse) Damper is at "B/L": 30 (pulse) Damper is at "FOOT": 67 (pulse) Damper is at "F/D": 80 (pulse) Damper is at "DEF": 97 (pulse)	-

OK:

The display is as specified in the normal condition.

Result

Result	Proceed to
NG	A
OK (Checking from the PROBLEM SYMPTOMS TABLE)	B
OK (Checking from the DTC)	C

B → **PROCEED TO NEXT CIRCUIT INSPECTION SHOWN IN PROBLEM SYMPTOMS TABLE**

C → **REPLACE AIR CONDITIONING AMPLIFIER**

A

2 REPLACE AIR OUTLET CONTROL SERVO MOTOR

HINT:
Since the servo motor cannot be inspected while it is removed from the vehicle, replace the servo motor with a normal one and check that the condition returns to normal.

NG

REPLACE AIR CONDITIONING HARNESS ASSEMBLY

DTC	B1446/46	Air Mix Damper Control Servo Motor Circuit (Driver Side)

DESCRIPTION

The air mix damper servo sends pulse signals to inform the A/C amplifier of the damper position. The A/C amplifier activates the motor (normal, reverse) based on the signals to move the air mix damper (driver seat) to any position, which adjusts the amount of air passing the heater core after passing the evaporator to control the blowing air temperature.

HINT:

Confirm that no mechanical problem is present because this diagnostic code can be output when either a damper link or damper is mechanically locked.

DTC No.	Detection Item	Trouble Area
B1446/46	Air mix damper position sensor value does not change even if air conditioner amplifier assembly operates air mix servo motor.	• Air mix control servo motor • Air conditioning harness assembly • A/C amplifier

WIRING DIAGRAM

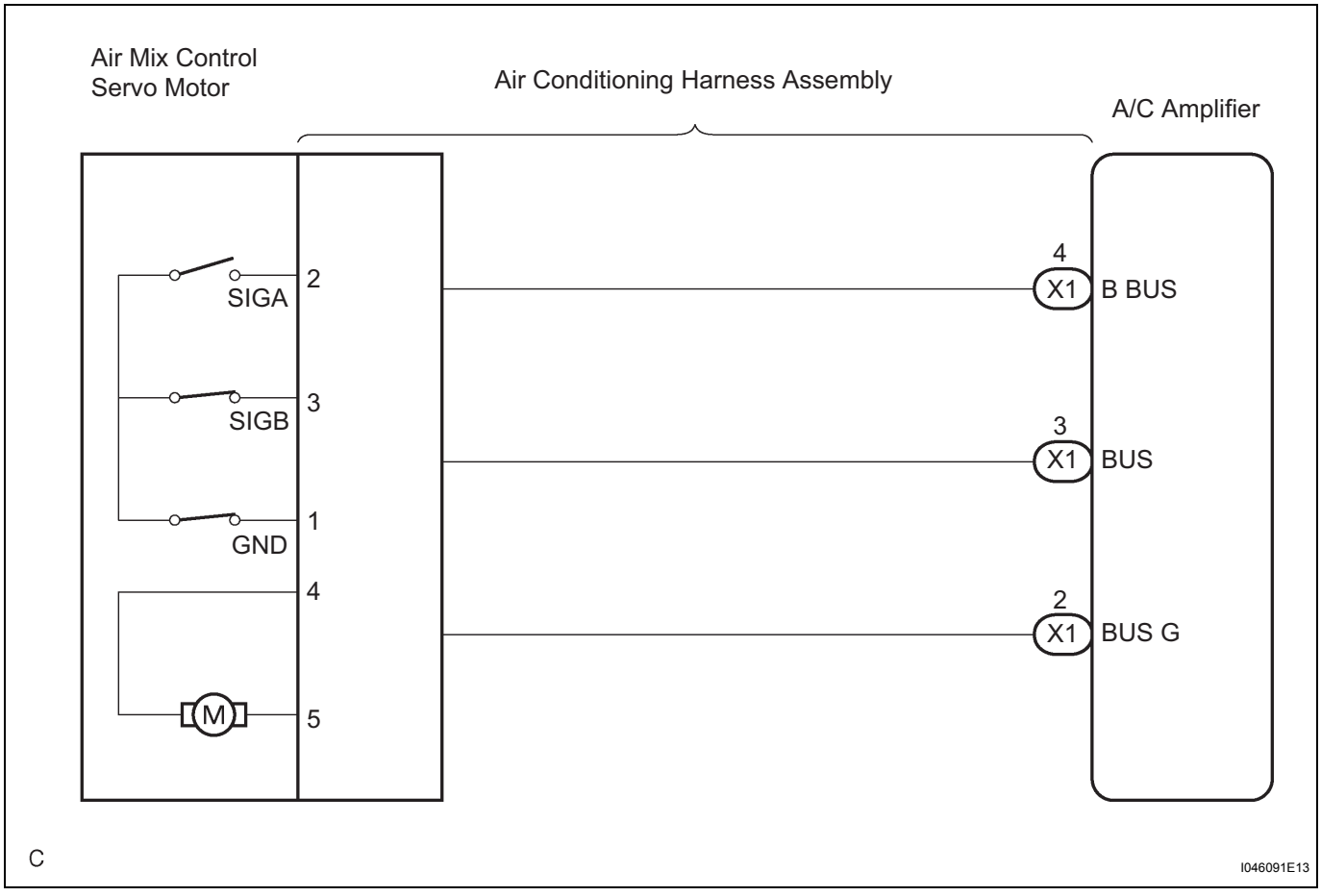

INSPECTION PROCEDURE

1	READ VALUE OF INTELLIGENT TESTER

(a) Connect the intelligent tester to DLC3.

AC

(b) Turn the ignition switch on (IG) and push the intelligent tester main switch on.
(c) Select the items below in the DATA LIST, and read the displays on the intelligent tester.

DATA LIST / AIR CONDITIONER:

Item	Measurement Item / Display (Range)	Normal Condition	Diagnostic Note
AIR MIX PULSE-D	Air mix servo motor target pulse (Driver side) / min.: 0 max.: 255	Damper is at "MAX.COOL": 5 (pulse) Damper is at "MAX.HOT": 103 (pulse)	-

OK:

The display is as specified in the normal condition.

Result

Result	Proceed to
NG	A
OK (Checking from the PROBLEM SYMPTOMS TABLE)	B
OK (Checking from the DTC)	C

B → **PROCEED TO NEXT CIRCUIT INSPECTION SHOWN IN PROBLEM SYMPTOMS TABLE**

C → **REPLACE AIR CONDITIONING AMPLIFIER**

A

2 REPLACE AIR MIX CONTROL SERVO MOTOR

HINT:
Since the servo motor cannot be inspected while it is removed from the vehicle, replace the servo motor with a normal one and check that the condition returns to normal.

NG

REPLACE AIR CONDITIONING HARNESS ASSEMBLY

HOW TO PROCEED WITH TROUBLESHOOTING

The intelligent tester can be used in steps 3, 6, 7, 8 and 11.

1 VEHICLE BROUGHT TO WORKSHOP

NEXT

2 CUSTOMER PROBLEM ANALYSIS

(a) Confirm problem symptoms.

NEXT

3 CHECK AND CLEAR THE DTCS

NEXT

4 PROBLEM SYMPTOM CONFIRMATION

- SYMPTOM OCCURS (GO TO STEP6)
- SYMPTOM DOES NOT OCCUR (GO TO STEP5)

5 SYMPTOM SIMULATION

NEXT

6 CHECK BODY MULTIPLEX COMMUNICATION SYSTEM

(a) Check for the DTC output.

- MULTIPLEX DTC OUTPUTS (PROCEED TO "BODY MULTIPLEX COMMUNICATION SYSTEM")
- NO MULTIPLEX DTC (GO TO STEP 7)

7 CHECK CAN COMMUNICATION SYSTEM

(a) Check for the DTC output.

- CAN DTC OUTPUTS (PROCEED TO "CAN COMMUNICATION SYSTEM")

NO CAN DTC (GO TO STEP 8)

8	DTC CHECK (OTHER THAN MULTIPLEX DTC)

MALFUNCTION CODE (GO TO STEP 9)

NORMAL CODE (GO TO STEP 10)

9	DTC CHART

GO TO STEP 12

10	PROBLEM SYMPTOMS TABLE

NEXT

11	ACTUATOR CHECK

NEXT

12	CIRCUIT INSPECTION

NEXT

13	PROBLEM IDENTIFICATION

NEXT

14	PARTS INSPECTION

NEXT

15	REPAIR

NEXT

16	CONFIRMATION TEST

NEXT

END

DTC	B1451/51	Compressor Solenoid Circuit

DESCRIPTION

In this circuit, the compressor assembly receives a signal on refrigerant compression required by the A/C amplifier. Based on the signal, the compressor assembly changes the degree of refrigerant compression.

DTC No.	Detection Item	Trouble Area
B1451/51	Solenoid of the externally changeable compressor circuit (Open or short)	• w/ Magnet clutch compressor assembly • Harness and connector between A/C amplifier and solenoid of the externally changeable compressor • A/C amplifier

WIRING DIAGRAM

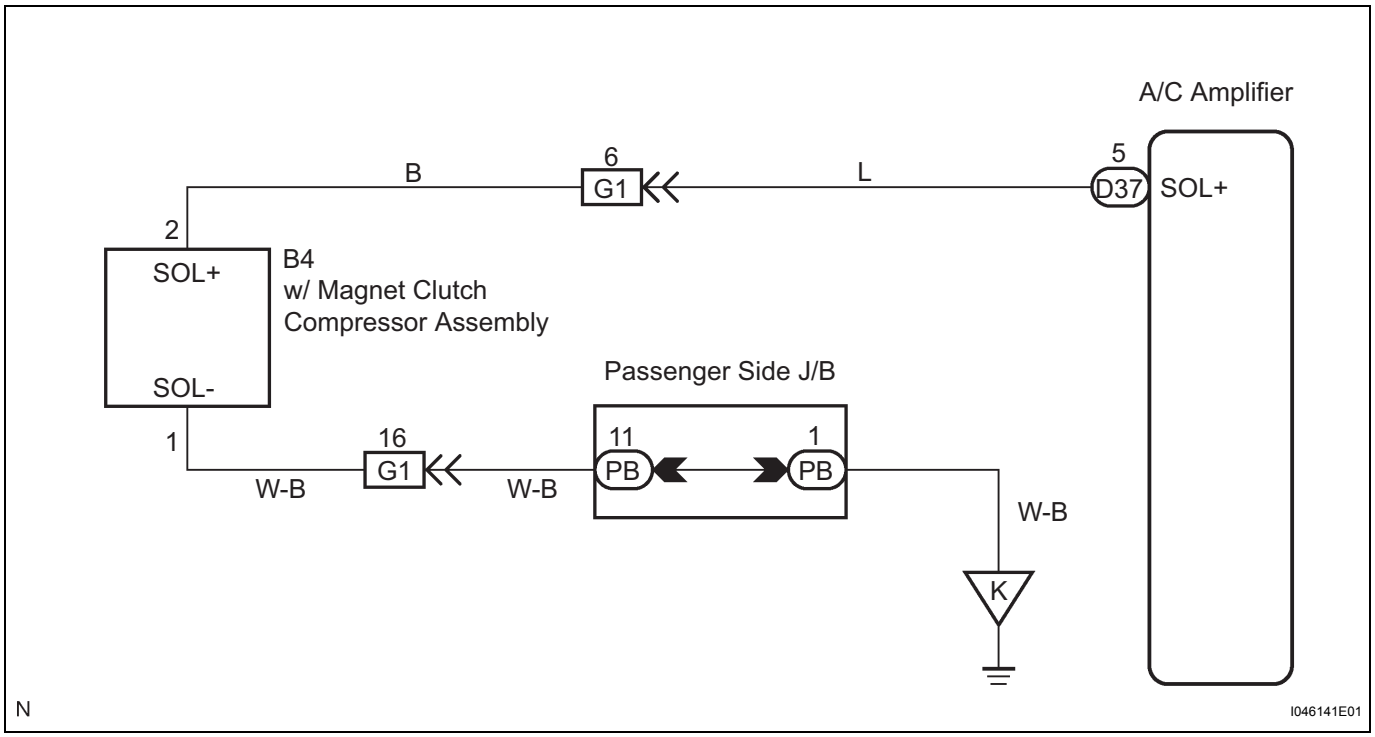

INSPECTION PROCEDURE

1	INSPECT W/MAGNETIC CLUTCH COMPRESSOR ASSEMBLY

w/ Magnet Clutch Compressor Assembly Connector Front View:

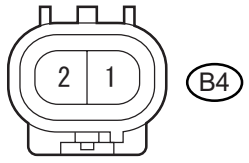

H C129705E03

(a) Disconnect the w/ magnet clutch compressor assembly connector.
(b) Measure the resistance according to the value(s) in the table below.

AC

Resistance

Tester Connection	Condition	Specified Condition
B4-2 (SOL+) - B4-1 (SOL-)	at 20°C (68°F)	10 to 11 Ω

NG → REPLACE MAGNETIC CLUTCH ASSEMBLY

OK

2 CHECK HARNESS AND CONNECTOR (A/C AMPLIFIER - WIHT MAGNET CLUTCH COMPRESSOR ASSEMBLY)

w/ Magnet Clutch Compressor Assembly Connector Wire Harness View:

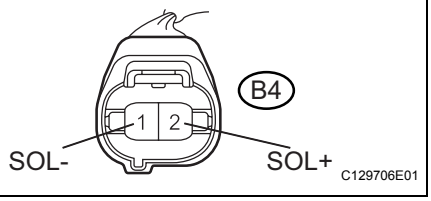

(a) Disconnect the connector from cooler compressor assembly.

Air Conditioning Amplifier Connector Wire Harness View:

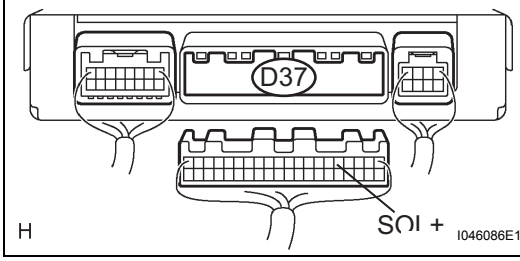

(b) Disconnect the connector from the A/C amplifier.
(c) Measure the resistance according to the value(s) in the table below.

Resistance

Tester Connection	Condition	Specified Condition
D37-5 (SOL+) - B4-2 (SOL+)	Always	Below 1 Ω
D37-5 (SOL+) - Body ground	Constant	10 kΩ or higher
B4-1 (SOL-) - Body ground	Constant	Below 1 Ω

NG → REPAIR OR REPLACE HARNESS OR CONNECTOR

OK

3 INSPECT AIR CONDITIONING AMPLIFIER (SOL +-BODY GROUND)

Air Conditioning Amplifier Connector Wire Harness View:

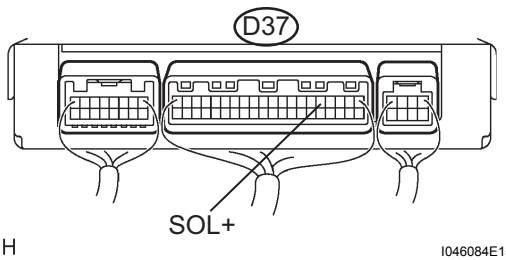

(a) Remove the air conditioning amplifier with connectors still connected.
(b) Turn the ignition switch on (IG).
(c) Press the AUTO switch ON.

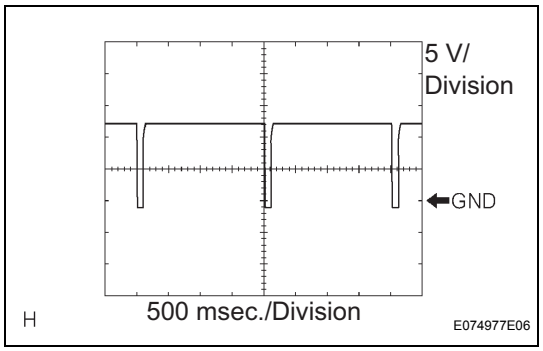

(d) Measure the waveform between terminal SOL+ (D37-5) of the A/C amplifier and body ground.

OK:

Waveform appears as shown in the illustration.

HINT:

Waveform varies with the blower level.

Result

Proceed to	Result
A	NG
	OK (Checking from the DTC)
B	OK (Checking from the PROBLEM SYMPTOMS TABLE)

B → **PROCEED TO NEXT CIRCUIT INSPECTION SHOWN IN PROBLEM SYMPTOMS TABLE**

A →

REPLACE AIR CONDITIONING AMPLIFIER

DTC	B1463/63	Driver Side Seat Heater Temperature Sensor Circuit

DESCRIPTION

Voltage is output from the A/C amplifier to the seat heater control sub-assembly. The voltage changes according to the resistance of the thermistor in the seat heater LH (cushion). The A/C amplifier reads changes in voltage to control the seat heater. The resistance of the thermistor in the seat heater LH (cushion) differs according to ambient temperature.

DTC No.	Detection Item	Trouble Area
B1463/63	Seat heater temperature sensor (Open or short) (Driver side)	• Seat heater control sub-assembly • Seat heater LH (Seat cushion) • Harness or connector between seat heater control sub-assembly and A/C amplifier • A/C amplifier

WIRING DIAGRAM

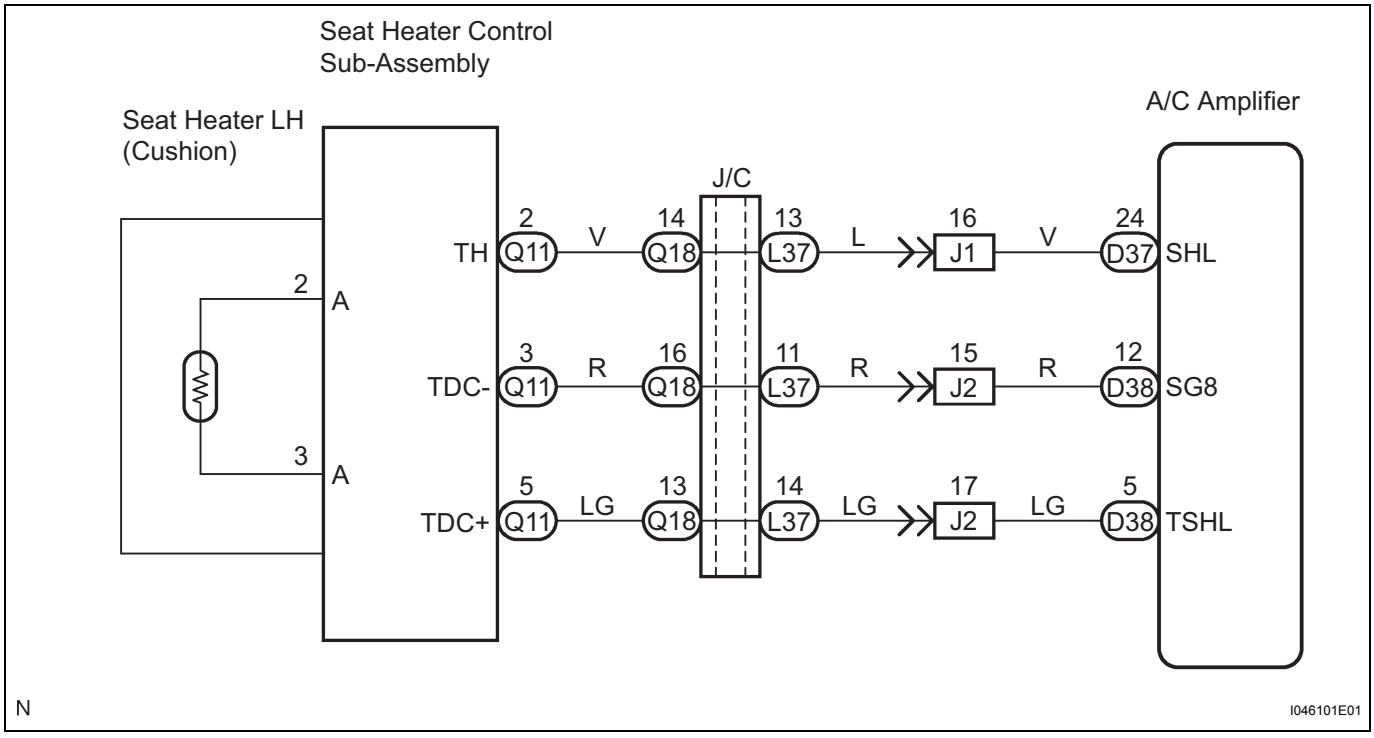

AC

INSPECTION PROCEDURE

1 INSPECT AIR CONDITIONING AMPLIFIER

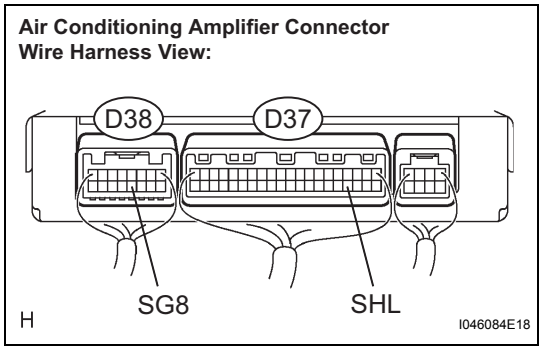

(a) Remove the A/C amplifier with connectors still connected.
(b) Turn the ignition switch on (IG).
(c) Measure the voltage and resistance according to the value(s) in the table below.

Voltage

Tester connection (Symbols)	Condition	Specified condition
D37-24 (SHL) - Body ground	Seat heater switch: ON	Below 1 V
D37-24 (SHL) - Body ground	Seat heater switch: OFF	10 to 14 V

Resistance

Tester connection (Symbols)	Condition	Specified condition
D38-12 (SG8) - Body ground	Always	Below 1 Ω

NG → REPLACE AIR CONDITIONING AMPLIFIER

OK

2 CHECK HARNESS AND CONNECTOR (A/C AMPLIFIER - SEAT HEATER CONTROL SUB-ASSEMBLY))

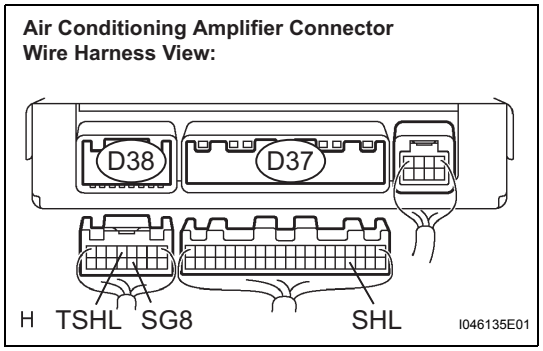

(a) Disconnect the connector from A/C amplifier.

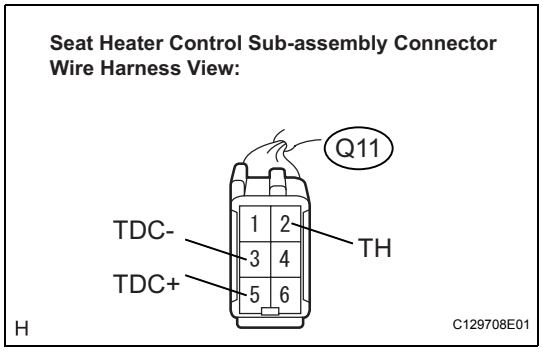

(b) Disconnect the connector from the seat heater control sub-assembly.
(c) Measure the resistance according to the value(s) in the table below.

Resistance

Tester connection (Symbols)	Condition	Specified condition
D38-5 (TSHL) - Q11-5 (TDC+)	Always	Below 1 Ω
D38-12 (SG8) - Q11-3 (TDC-)	Always	Below 1 Ω
D37-24 (SHL) - Q11-2 (TH)	Always	Below 1 Ω

AC

Tester connection (Symbols)	Condition	Specified condition
D38-5 (TSHL) - Body ground	Always	10 kΩ or higher
D38-12 (SG8) - Body ground	Always	10 kΩ or higher
D37-24 (SHL) - Body ground	Always	10 kΩ or higher

NG → **REPAIR OR REPLACE HARNESS OR CONNECTOR**

OK

3 INSPECT SEAT HEATER LH (SEAT CUSHION)

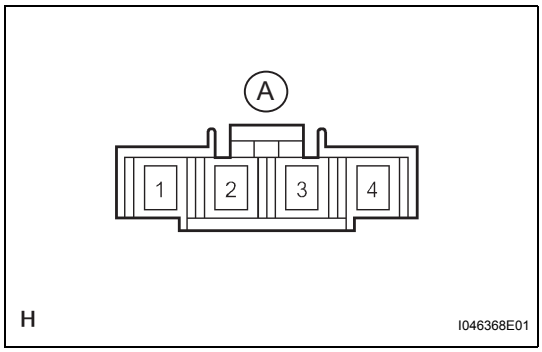

(a) Disconnect the seat cushion heater.
(b) Heat the temperature sensor and thermostat with a light.
(c) Measure the resistance according to the value(s) in the table below.

Resistance

Terminal No.	Condition	Specified condition
A2 - A3	Ambient temperature (15 °C to 40 °C)	4 kΩ to 15 kΩ

If the resistance is not as specified, replace the seat cushion heater assembly.

NG → **REPLACE SEAT HEATER LH (SEAT CUSHION)**

OK

REPLACE SEAT HEATER CONTROL SUB-ASSEMBLY

REFRIGERANT

ON-VEHICLE INSPECTION

1. INSPECT REFRIGERANT PRESSURE WITH MANIFOLD GAUGE SET

(a) This is a method in which trouble is located by using a manifold gauge set. Read the manifold gauge pressure when the following conditions are established.

Test conditions:

- Temperature at the air inlet with the switch set at RECIRC is 30 to 35°C (86 to 95°F)
- Engine is running at 1500 rpm
- Blower sped control switch is in the "HI" position
- Temperature control dial is in the "COOL" position
- A/C switch is ON
- Doors fully open

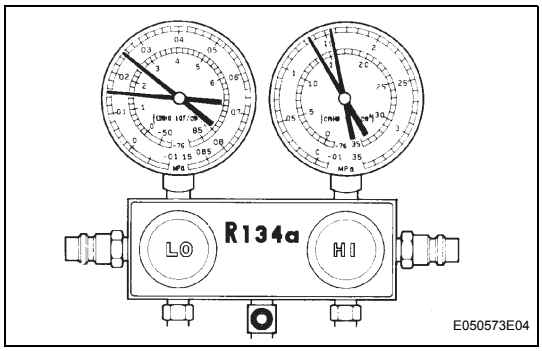

(1) The refrigeration system functions normally.

Gauge reading:

Low pressure side:

0.15 to 0.25 MPa (1.5 to 2.5 kgf/cm^2, 21.3 to 35.6 psi)

High pressure side:

1.37 to 1.57 MPa (14 to 16 kgf/cm^2, 199 to 228 psi)

(2) Moisture present in refrigeration system.

Condition: Periodially cools and then fails to cool

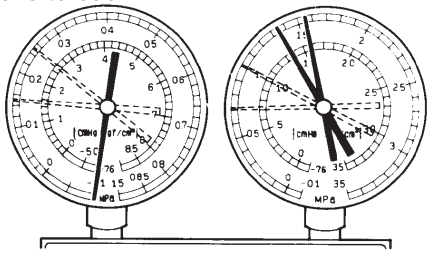

Symptom	Probable cause	Diagnosis	Corrective Actions
During operation, pressure on low pressure side cycles between normal and vacuum.	Moisture in refrigeration system freezes at expansion valve orifice causing a temporary stop of cycle, however, when it melts, normal state is restored.	• Dryer in oversaturated state • Moisture in refrigeration system freezes at expansion valve orifice and blocks circulation of refrigerant	1. Replace condenser 2. Remove moisture in cycle by repeatedly evacuating air 3. Supply a proper amount of new refrigerant

(3) Insufficient cooling

Condition : Cooling system does not function effectively.

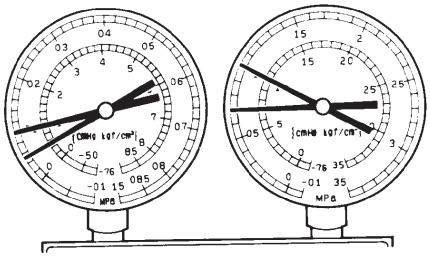

I022118E07

Symptom	Probable cause	Diagnosis	Corrective Actions
• Pressure low on both low and high pressure sides • Insufficient cooling performance	Gas leakage in refrigeration system	• Insufficient refrigerant • Refrigerant leaking	1. Check for gas leakage and repair if necessary 2. Supply a proper amount of new refrigerant 3. If indicated pressure value is close to 0 when connected to the gauge, create the vacuum after inspecting and repairing the location of leak

(4) Poor circulation of refrigerant

Condition : Cooling system does not function effectively.

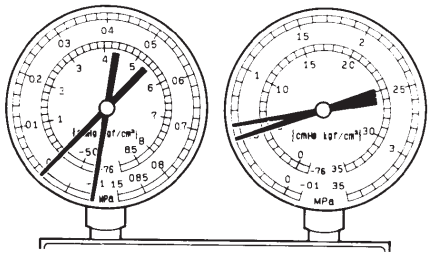

I022119E08

Symptom	Probable cause	Diagnosis	Corrective Actions
• Pressure low on both low and high pressure sides • Frost on pipe from condenser to unit	Refrigerant flow obstructed by dirt in receiver	Receiver clogged	Replace condenser

(5) Refrigerant does not circulate.

Condition : Cooling system does not function. (Sometimes it may function)

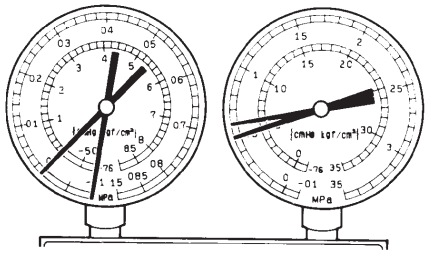

I022120E06

Symptom	Probable cause	Diagnosis	Corrective Actions
• Vacuum indicated on low pressure side, very low pressure indicated on high pressure side • Frost or condensation seen on piping on both sides of cooler condenser core or cooler expansion value	• Refrigerant flow obstructed by moisture or dirt in refrigeration system • Refrigerant flow obstructed by gas leaked from expansion valve	Refrigerant does not circulate	1. Check expansion valve 2. Clean out dirt in expansion valve by blowing air 3. Replace condenser 4. Evaporate air and supply a proper amount of new refrigerant 5. For gas leakage from expansion valve, replace expansion valve

(6) Refrigerant overcharged or insufficient cooling of condenser

Condition: Cooling system does not function effrctively.

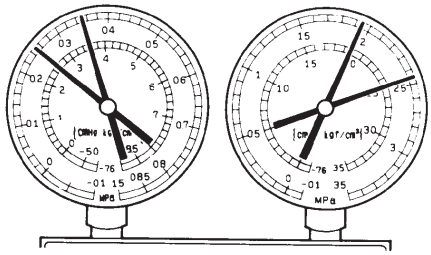

I022121E13

Symptom	Probable cause	Diagnosis	Corrective Actions
Pressure too high on both low and high pressure sides	• Unable to develop sufficient performance due to excessive use of refrigeration system • Insufficient cooling of condenser	• Excessive refrigerant in cycle → too much refrigerant supplied • Condenser cooling insufficient → condenser fins clogged at cooling fan	1. Clean condenser *1 2. Check cooling fan with cooling fan motor operated *2 3. If (*1) and (*2) are in normal state, check the amount of refrigerant and supply a proper amount of refrigerant

(7) Air present in refrigeration system

Condition : Cooling system does not function.

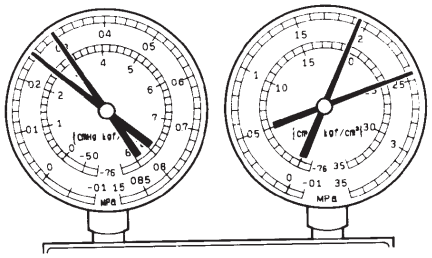

NOTE: These gauge indications occur when the refrigeration system opens and the refrigerant is charged without vacuum purging.

I022122E13

Symptom	Probable cause	Diagnosis	Corrective Actions
• Pressure too high on both low and high pressure sides • The low pressure piping too hot to touch	Air in system	• Air present in refrigeration system • Insufficient vacuum purging	1. Check compressor oil to see if it is dirty or insufficient 2. Evacuate air and supply new refrigerant

(8) Expansion valve malfunction

Condition : Insufficient Cooling.

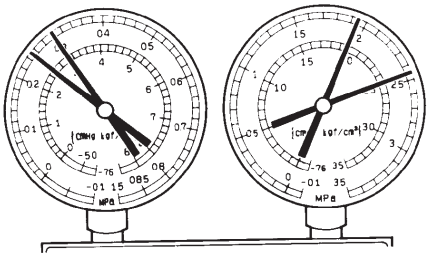

I022123E08

Symptom	Probable cause	Diagnosis	Corrective Actions
• Pressure too high on both low and high pressure sides • Frost or a large amount of condensation on piping on low pressure side	Trouble in expansion valve	• Excessive refrigerant in low pressure piping • Expansion valve opened too wide	Check expansion valve

(9) Defective compressor

Condition : Insufficient Cooling.

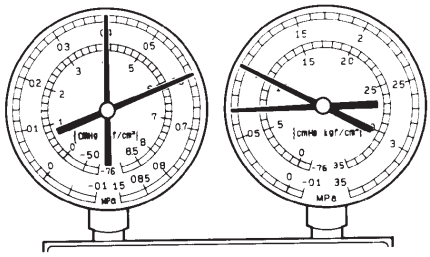

I022124E08

Symptom	Probable cause	Diagnosis	Corrective Actions
• Pressure too high on low pressure sides • Pressure too low on high pressure sides	Internal leak in compressor	• Compression failure • Leakage from damaged valve or broken sliding parts	Repair or replace compressor

Gauge readings (Reference)

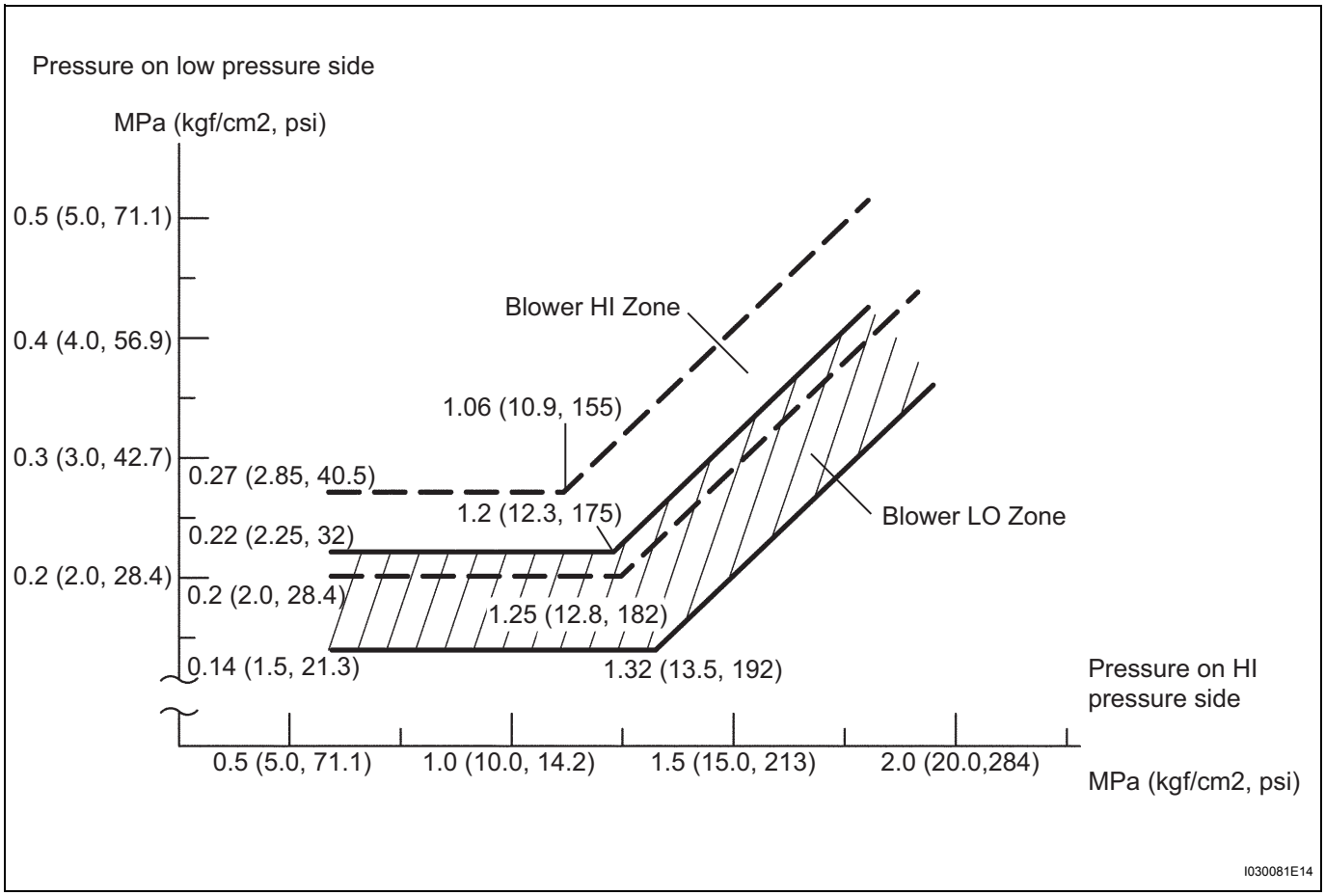
Pressure on low pressure side
MPa (kgf/cm2, psi)
0.5 (5.0, 71.1)
0.4 (4.0, 56.9)
0.3 (3.0, 42.7)
0.2 (2.0, 28.4)
Blower HI Zone
1.06 (10.9, 155)
0.27 (2.85, 40.5)
1.2 (12.3, 175)
Blower LO Zone
0.22 (2.25, 32)
0.2 (2.0, 28.4)
1.25 (12.8, 182)
0.14 (1.5, 21.3)
1.32 (13.5, 192)
Pressure on HI pressure side
0.5 (5.0, 71.1)
1.0 (10.0, 14.2)
1.5 (15.0, 213)
2.0 (20.0,284)
MPa (kgf/cm2, psi)
I030081E14

DTC	B1464/64	Front Passenger Side Seat Heater Temperature Sensor Circuit

DESCRIPTION

Voltage is output from the A/C amplifier to the seat heater control sub-assembly. The voltage changes according to the resistance of the thermistor in the seat heater LH (cushion). The A/C amplifier reads changes in voltage to control the seat heater. The resistance of the thermistor in the seat heater LH (cushion) differs according to ambient temperature.

DTC No.	Detection Item	Trouble Area
B1464/64	Seat heater temperature sensor (Open or short) (Passenger side)	• Seat heater control sub-assembly • Seat heater RH (Seat cushion) • Harness or connector between seat heater control sub-assembly and A/C amplifier • A/C amplifier

WIRING DIAGRAM

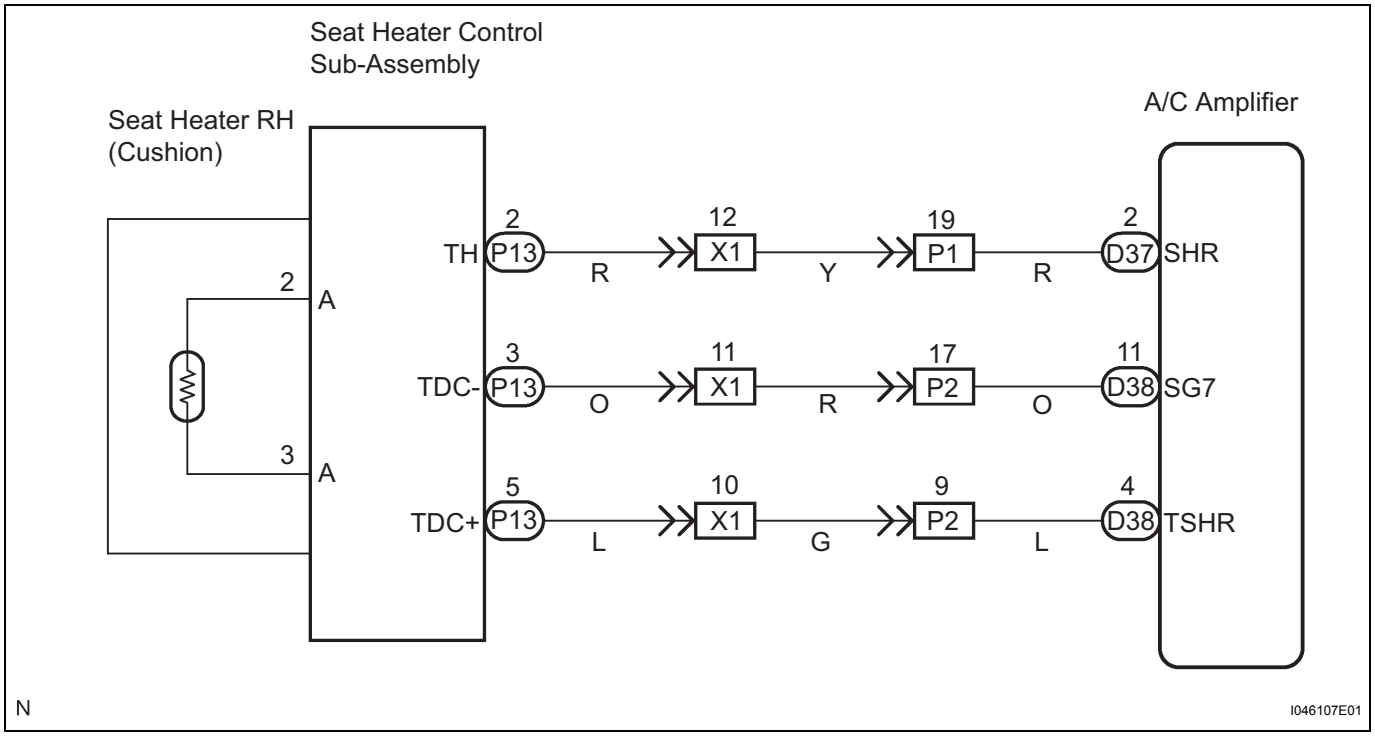

INSPECTION PROCEDURE

1 INSPECT AIR CONDITIONING AMPLIFIER

Air Conditioning Amplifier Connector Wire Harness View:

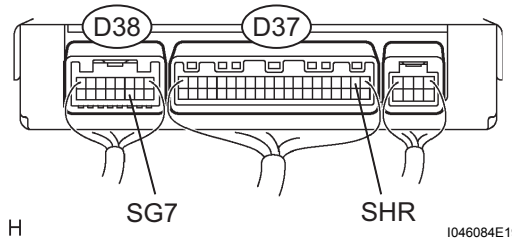

(a) Remove the A/C amplifier with connectors still connected.
(b) Turn the ignition switch on (IG).
(c) Measure the voltage and resistance according to the value(s) in the table below.

Voltage

Tester connection (Symbols)	Condition	Specified condition
D37-2 (SHR) - Body ground	Seat heater switch: ON	Below 1 V
D37-2 (SHR) - Body ground	Seat heater switch: OFF	10 to 14 V

Resistance

Tester connection (Symbols)	Condition	Specified condition
D38-11 (SG7) - Body ground	Always	Below 1 Ω

NG → REPLACE AIR CONDITIONING AMPLIFIER

OK

2 CHECK HARNESS AND CONNECTOR (A/C AMPLIFIER - SEAT HEATER CONTROL SUB-ASSEMBLY)

Air Conditioning Amplifier Connector Wire Harness View:

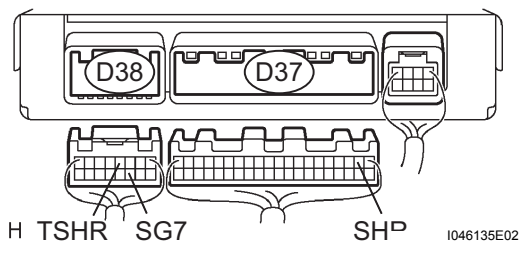

(a) Disconnect the connector from A/C amplifier.

Seat Heater Control Sub-assembly Connector Wire Harness View:

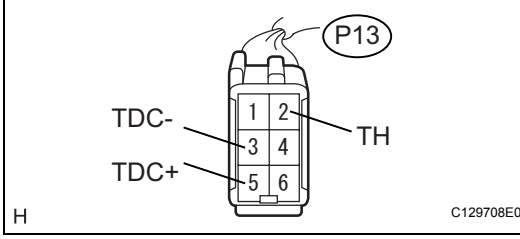

(b) Disconnect the connector from the seat heater sub-assembly.
(c) Measure the resistance according to the value(s) in the table below.

Resistance

Tester connection (Symbols)	Condition	Specified condition
D38-4 (TSHR) - P13-5 (TDC+)	Always	Below 1 Ω
D38-11 (SG7) - P13-3 (TDC-)	Always	Below 1 Ω
D37-2 (SHR) - P13-2 (TH)	Always	Below 1 Ω

AC

Tester connection (Symbols)	Condition	Specified condition
D38-4 (TSHR) - Body ground	Always	10 kΩ or higher
D38-11 (SG7) - Body ground	Always	10 kΩ or higher
D37-2 (SHR) - Body ground	Always	10 kΩ or higher

NG → REPAIR OR REPLACE HARNESS OR CONNECTOR

OK

3 INSPECT SEAT HEATER RH (SEAT CUSHION)

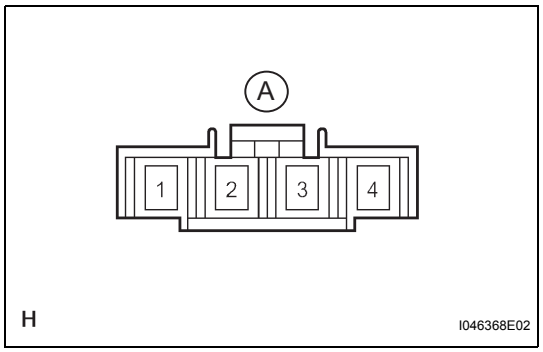

(a) Disconnect the seat cushion heater.
(b) Heat the temperature sensor and thermostat with a light.
(c) Measure the resistance according to the value(s) in the table below.

Resistance

Terminal No.	Condition	Specified condition
A2 - A3	Ambient temperature (15 °C to 40 °C)	4 kΩ to 15 kΩ

If the resistance is not as specified, replace the seat cushion heater assembly.

NG → REPLACE SEAT HEATER RH (SEAT CUSHION)

OK

REPLACE SEAT HEATER CONTROL SUB-ASSEMBLY

DTC	B1497/97	BUS IC Communication Malfunction

DESCRIPTION

The air conditioning harness assembly connects the air conditioning amplifier and each servomotor. The A/C amplifier supplies power and sends operation instructions to each servomotor through the air conditioning harness assembly. Each servomotor sends the damper position information to the A/C amplifier.

DTC No.	Detection Item	Trouble Area
B1497/97	Communication line error or open	• Air conditioning harness assembly • A/C amplifier

WIRING DIAGRAM

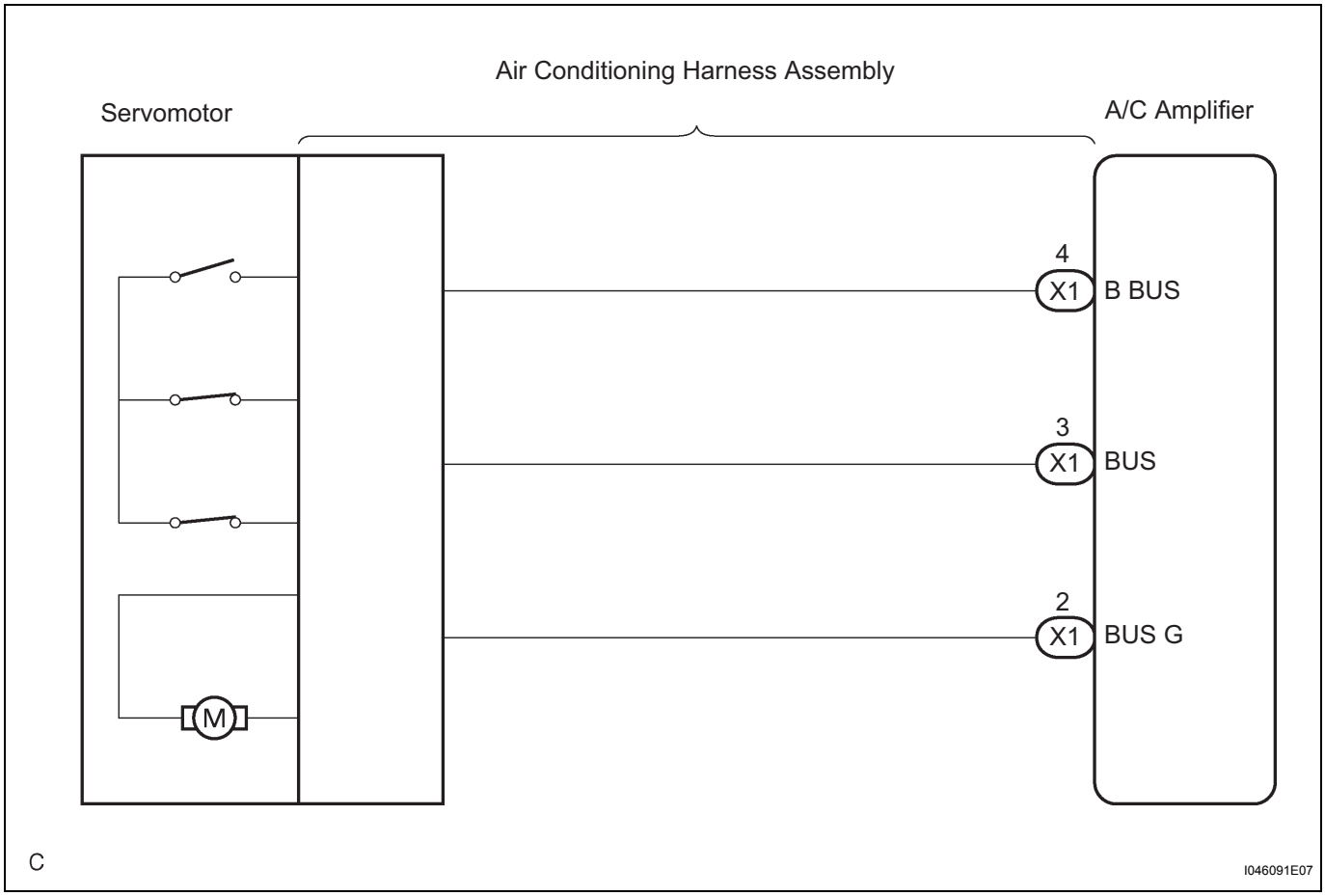

INSPECTION PROCEDURE

1 INSPECT AIR CONDITIONING AMPLIFIER

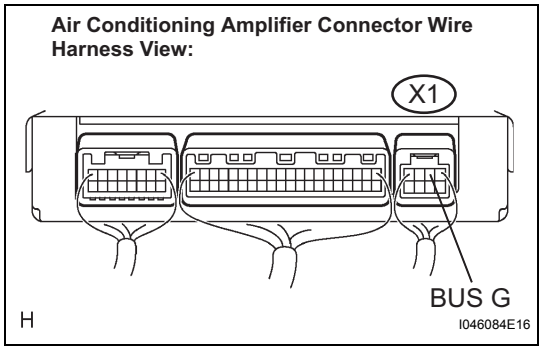

(a) Remove the A/C amplifier with connectors still connected.
(b) Measure the voltage according to the value(s) in the table below.

Voltage

Tester Connection	Condition	Specified Condition
X1-2 (BUS G) - Body ground	Always	Below 1 V

NG → REPLACE AIR CONDITIONING AMPLIFIER

OK

2 INSPECT AIR CONDITIONING AMPLIFIER

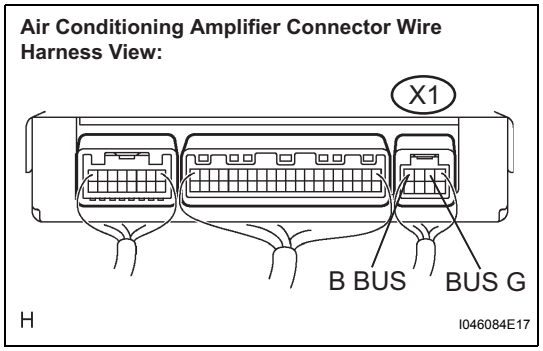

(a) Remove the A/C amplifier with connectors still connected.
(b) Measure the voltage according to the value(s) in the table below.

Voltage

Tester Connection	Condition	Specified Condition
X1-4 (B BUS) - X1-2 (BUS G)	Ignition switch on (IG)	10 to 14 V
X1-4 (B BUS) - X1-2 (BUS G)	Ignition switch off	Below 1 V

NG → REPLACE AIR CONDITIONING AMPLIFIER

OK

REPLACE AIR CONDITIONING HARNESS ASSEMBLY

DTC B1499/99 Multiplex Communication Circuit

DESCRIPTION

DTC No.	DTC Detecting Condition	Trouble Area
B1499/99	Open in multiplex communication circuit	•Multiplex communication system

INSPECTION PROCEDURE

1 CHECK DIAGNOSTIC TROUBLE CODE (DTC B1499/99)

(a) Clear the DTC (See page AC-39).
(b) Read the DTC (See page AC-39).

Result

Result	Proceed to
DTC (B1499/99) is not output	A
DTC (B1499/99) is output	B

B → GO TO MULTIPLEX COMMUNICATION SYSTEM

A

SYSTEM OK

Blower Motor Circuit

DESCRIPTION

The blower motor is operated by signals from the A/C amplifier. Blower motor speed signals are transmitted by changes in the duty ratio.

Duty Ratio:

The duty ratio is the ratio of the period of continuity in one cycle. For example, if A is the period of continuity in one cycle, B is the period of non-continuity.

The blower motor controller controls the blower motor speed.

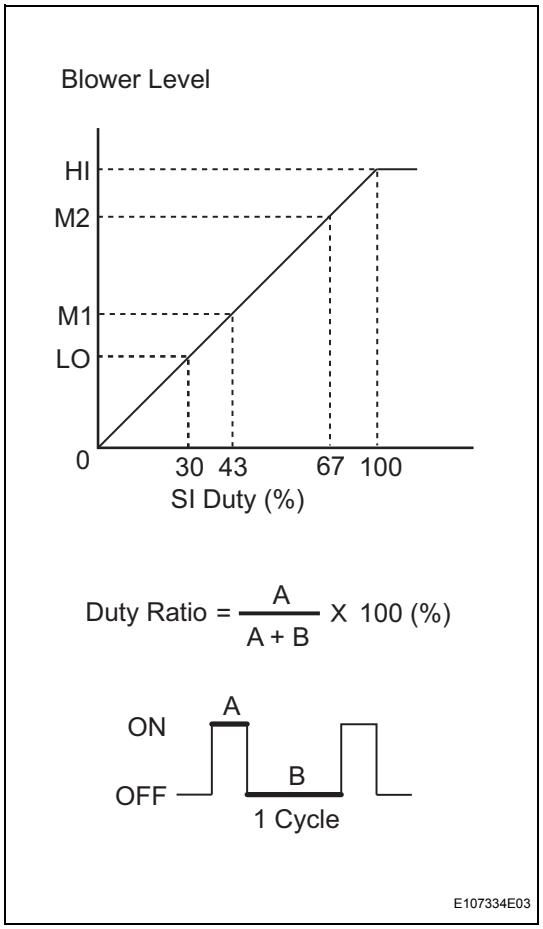

WIRING DIAGRAM

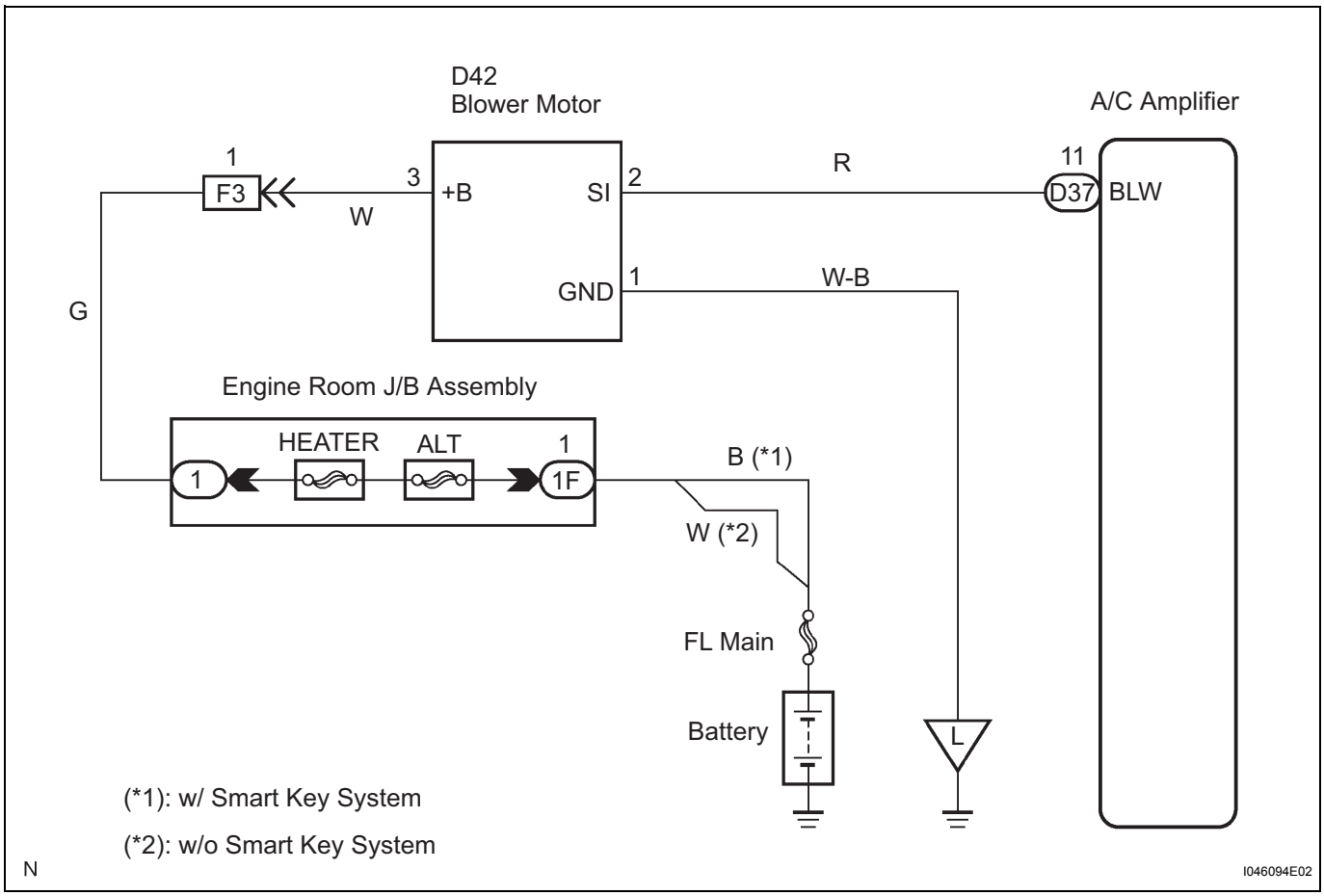

INSPECTION PROCEDURE

1	READ VALUE OF INTELLIGENT TESTER

(a) Connect the intelligent tester to the DLC3.
(b) Turn the ignition switch on (IG) and push the intelligent tester main switch on.
(c) Select the item below in the DATA LIST, and read the display on the intelligent tester.

DATA LIST / AIR CONDITIONER:

Item	Measurement Item / Display (Range)	Normal Condition	Diagnostic Note
BLOWER LEVEL	Blower motor speed level / min.: 0 level max.: 31 level	Increases in the range between 0 and 31 as the speed increase	-

OK:
The display is as specified in the normal condition.

NG → **REPLACE AIR CONDITIONING AMPLIFIER**

OK

2	CHECK ACTUATOR

(a) Set the actuator check mode (See page AC-45).

AC

(b) Press the UPDr switch to set the step operation.
(c) Check the air flow level by hand.

Display Code	Blower level
0	0
1	1
2	17
3	17
4	17
5	17
6	17
7	17
8	17
9	31

OK:
Blower level changes in accordance with each display code.

NG → **Go to step 3**

OK

PROCEED TO NEXT CIRCUIT INSPECTION SHOWN IN PROBLEM SYMPTOMS TABLE

3 INSPECT FUSE (HEATER)

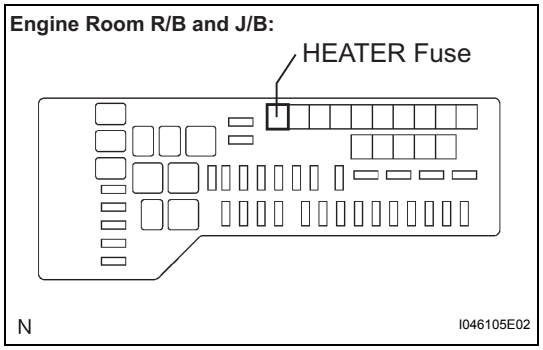

(a) Remove the HEATER fuse from the engine room R/B and J/B.
(b) Measure the resistance according to the value(s) in the table below.
Resistance

Tester item	Condition	Specified condition
HEATER fuse	Always	Below 1 Ω

NG → **REPLACE FUSE (HEATER)**

OK

4	CHECK HARNESS AND CONNECTOR (BLOWER MOTOR - AIR CONDITIONING AMPLIFIER)

Blower Motor Connector Wire Harness View:

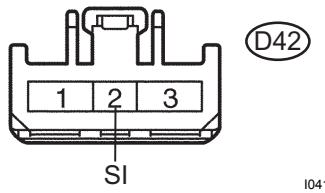

(a) Disconnect the connector from blower motor.

Air Conditioning Amplifier Connector Wire Harness View:

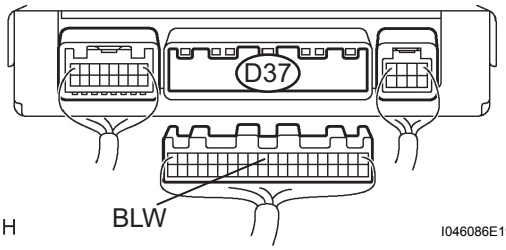

(b) Disconnect the connector from the A/C amplifier.
(c) Measure the resistance according to the value(s) in the table below.

Resistance

Tester connection (Symbols)	Condition	Specified condition
D37-11 (BLW) - D42-2 (SI)	Always	Below 1 Ω
D37-11 (BLW) - Body ground	Constant	10 kΩ or higher

NG → **REPAIR OR REPLACE HARNESS AND CONNECTOR**

OK

5	CHECK HARNESS AND CONNECTOR (BLOWER MOTOR - BODY GROUND)

Blower Motor Connector Front View:

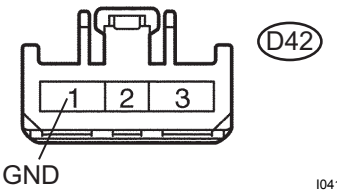

(a) Measure the resistance according to the value(s) in the table below.

Resistance

Tester connection (Symbols)	Condition	Specified condition
D42-1(GND) - Body ground	Constant	Below 1 Ω

NG → **REPAIR OR REPLACE HARNESS AND CONNECTOR**

OK

6 CHECK HARNESS AND CONNECTOR (BLOWER MOTOR - BATTERY)

Blower Motor Connector Front View:

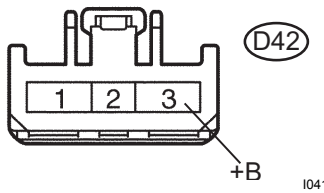

(a) Measure the voltage according to the value(s) in the table below.

Voltage

Tester connection (Symbols)	Condition	Specified condition
D42-1(+B) - Body ground	Constant	10 to 14 V

NG → **REPAIR OR REPLACE HARNESS AND CONNECTOR**

OK

7 INSPECT BLOWER MOTOR

Blower Motor Connector Front View:

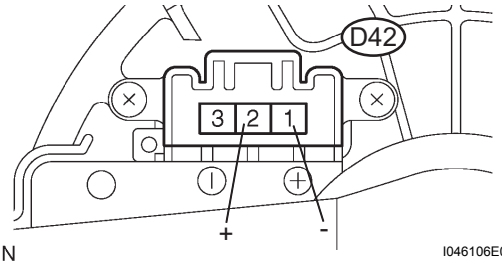

(a) Remove the blower motor.
(b) Connect positive (+) lead to terminal 2 of the blower motor connector and negative (-) lead to terminal 1.

OK:

Blower motor operates smoothly.

NOTICE:

While using the battery during inspection, do not bring the positive and negative tester probes too close to each other as a short circuit may occur.

NG → **REPLACE BLOWER MOTOR**

OK

8 INSPECT AIR CONDITIONING AMPLIFIER (BLW - BODY GROUND)

Air Conditioning Amplifier Connector Wire Harness View:

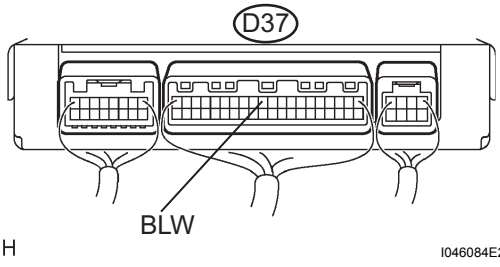

(a) Reconnect the connector to the blower motor.
(b) Reconnect the connector to the A/C amplifier.
(c) Remove the A/C amplifier with connectors still connected.
(d) Turn the ignition switch on (IG).
(e) Press the blower switch on (LO).

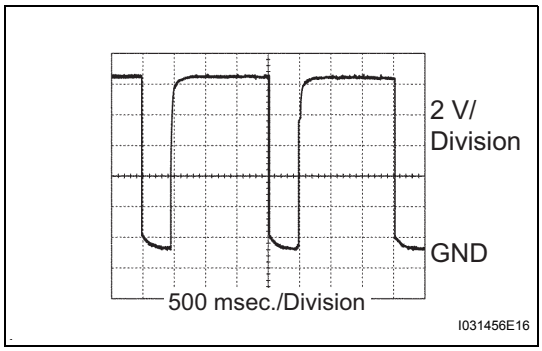

(f) Measure the waveform between terminal BLW (D37-11) of the A/C amplifier and body ground.
HINT:
Waveform varies with the blower level.

NG → **REPLACE AIR CONDITIONING AMPLIFIER**

OK

PROCEED TO NEXT CIRCUIT INSPECTION SHOWN IN PROBLEM SYMPTOMS TABLE

Compressor Circuit

DESCRIPTION

When the A/C switch is turned on, the magnetic clutch ON signal is sent from the MGC terminal of the A/C amplifier. Then, the MG CLT relay turns on to operate the magnetic clutch.

WIRING DIAGRAM

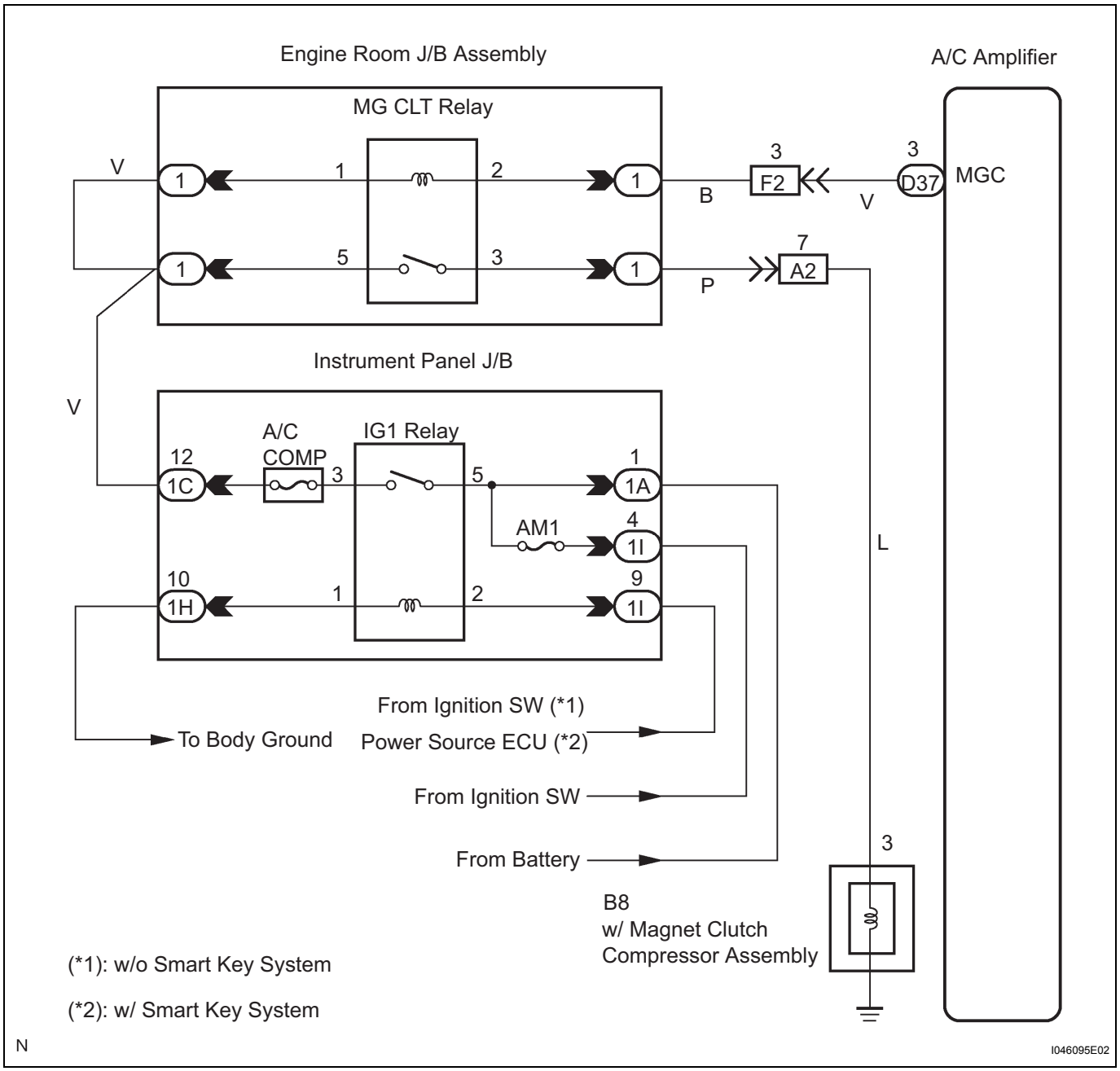

INSPECTION PROCEDURE

1	PERFORM ACTIVE TEST BY INTELLIGENT TESTER

(a) Connect the intelligent tester to DLC3.

AC

(b) Turn the ignition switch on (IG) and push the intelligent tester main switch on.
(c) Select the item below in the ACTIVE TEST and then check that the relay operates.

DATA LIST / AIR CONDITIONER:

Item	Measurement Item / Display (Range)	Diagnostic Note
A/C MAG CLUTCH	Magnetic clutch relay / OFF,ON	-

NG → **Go to step 2**

OK

PROCEED TO NEXT CIRCUIT INSPECTION SHOWN IN PROBLEM SYMPTOMS TABLE

2 INSPECT FUSE (A/C COMP)

Instrument Panel J/B:

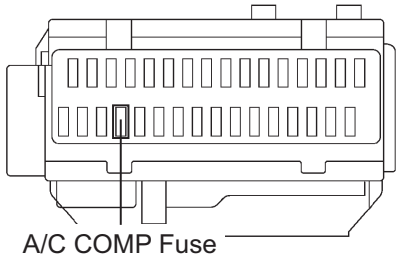

(a) Remove the A/C COMP fuse from the instrument panel J/B.
(b) Measure the resistance according to the value(s) in the table below.

Resistance

Tester item	Condition	Specified condition
A/C COMP fuse	Always	Below 1 Ω

NG → **REPLACE FUSE (A/C COMP)**

OK

3 INSPECT MAGNETIC CLUTCH RELAY

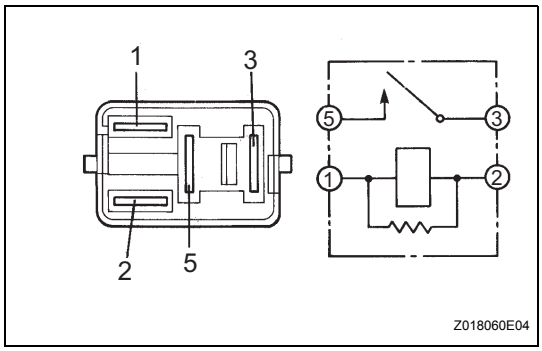

(a) Remove the MG CLT relay (magnetic clutch relay) from engine room R/B and J/B.
(b) Measure the resistance according to the value(s) in the table below.

Resistance

Tester connection	Condition	Specified condition
3 - 5	Always	10 kΩ or higher
3 - 5	When Battery voltage is applied to terminals 1 and 2	Below 1 Ω (When Battery voltage is applied to terminals 1 and 2)

NOTICE:
While using the battery during inspection, do not bring the positive and negative tester probes too close to each other as a short circuit may occur.

NG → **REPLACE MAGNETIC CLUTCH RELAY**

OK

AC

4 INSPECT W/MAGNETIC CLUTCH COMPRESSOR ASSEMBLY

w/ Magnetic Clutch Compressor Assembly Connector Front View:

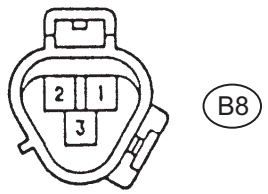

Ie–3–2 E005280E13

(a) Disconnect the connector from the w/ magnet clutch compressor assembly.
(b) Measure the resistance according to the value(s) in the table below.

Resistance

Tester connection	Condition	Specified condition
B8-3 - Body Ground	Always	Below 1 Ω

NG → **REPLACE W/MAGNETIC CLUTCH COMPRESSOR ASSEMBLY**

OK

5 INSPECT AIR CONDITIONING AMPLIFIER

Air Conditioning Amplifier Connector Wire Harness Side:

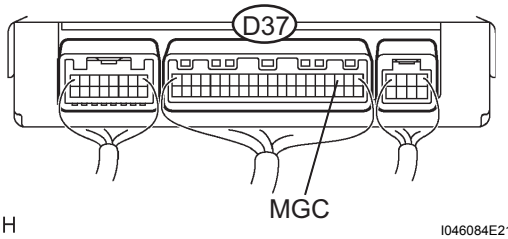

H I046084E21

(a) Remove the A/C amplifier and disconnect the connector.
(b) Turn the ignition switch on (IG).
(c) Measure the voltage according to the value(s) in the table below.

voltage

Tester connection	Condition	Specified condition
D37-3 (MGC)- Body Ground	Magnet clutch: ON	Below 1 V
D37-3 (MGC)- Body Ground	Magnet clutch: OFF	10 to 14 V

Result

Result	Proceed to
NG	A
OK (w/o Smart key system)	B
OK (w/Smart key system)	C

B → **GO TO STARTING SYSTEM**

C → **GO TO PUSH BUTTON START SYSTEM**

A

REPLACE AIR CONDITIONING AMPLIFIER

Heater Control Panel Power Source Circuit

DESCRIPTION

Battery voltage is supplied to the heater control panel through the HTR fuse.

WIRING DIAGRAM

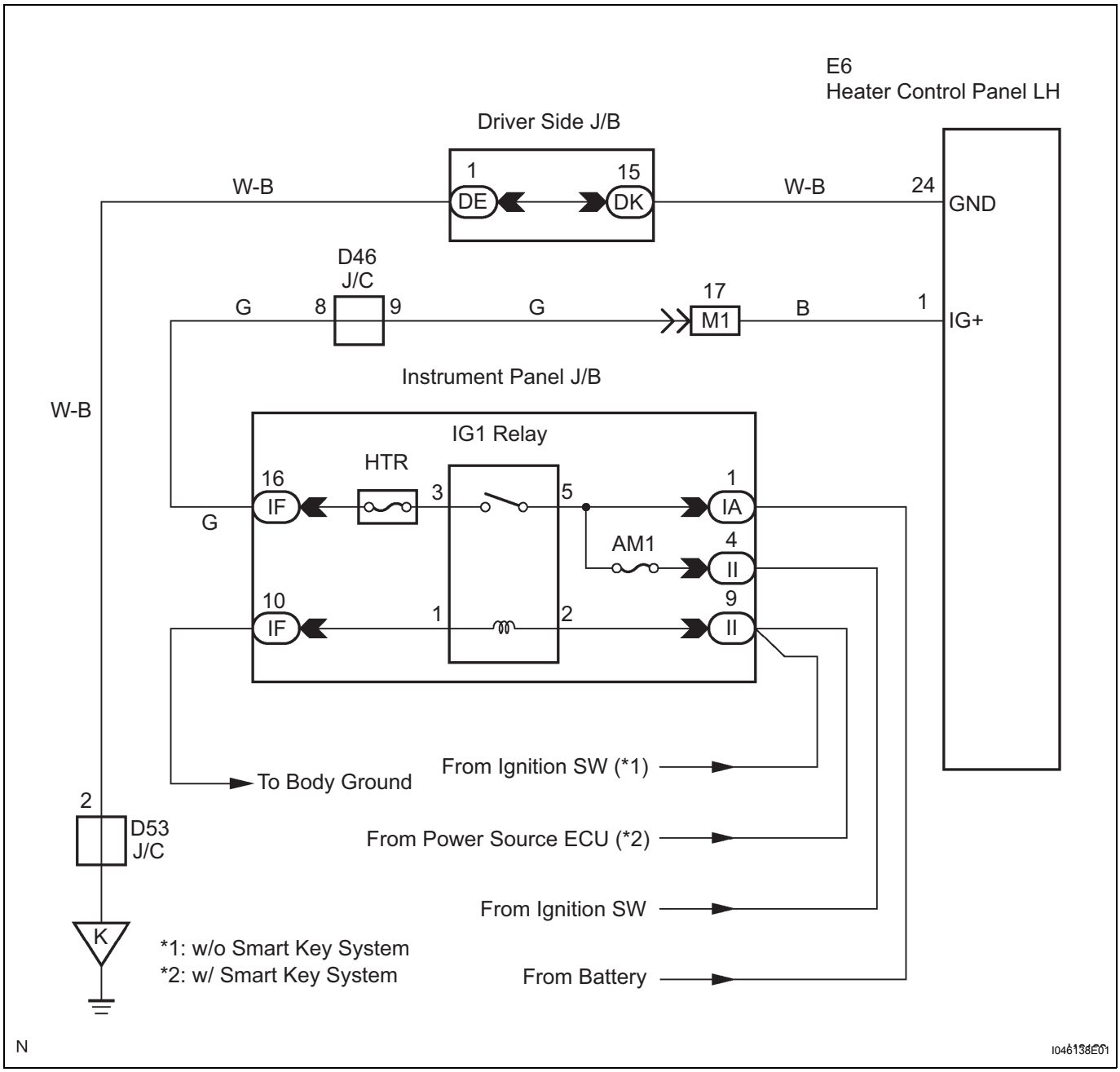

INSPECTION PROCEDURE

1 CHECK HARNESS AND CONNECTOR (IG+ - BODY GROUND)

Heater Control Panel LH Connector Wire Harness View:

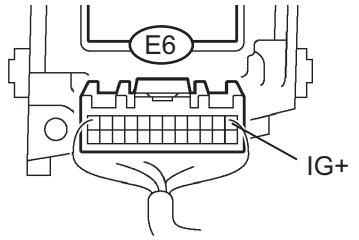

(a) Disconnect the connector from heater control panel LH.
(b) Measure the voltage according to the value(s) in the table below.

Voltage

Tester connection (Symbols)	Condition	Specified condition
E6-1 (IG+) - Body ground	Ignition switch on (IG)	10 to 14 V
E6-1 (IG+) - Body ground	Ignition switch off	Below 1 V

Result

Result	Proceed to
OK	A
NG (w/o Smart key system)	B
NG (w/ Smart key system)	C

B → GO TO STARTING SYSTEM

C → GO TO PUSH BUTTON START SYSTEM

A

2 CHECK HARNESS AND CONNECTOR (GND - BODY GROUND)

Heater Control Panel LH Connector Wire Harness View:

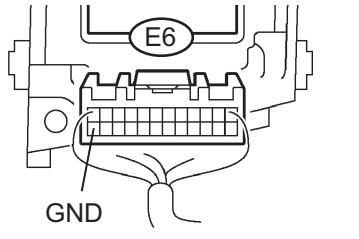

(a) Measure the resistance according to the value(s) in the table below.

Resistance

Tester connection (Symbols)	Condition	Specified condition
E6-24 (GND) - Body ground	Always	Below 1 Ω

NG → REPAIR OR REPLACE HARNESS OR CONNECTOR

OK

PROCEED TO NEXT CIRCUIT INSPECTION SHOWN IN PROBLEM SYMPTOMS TABLE

Heater Control Switch Circuit

DESCRIPTION

The heater control panel LH receives the heater control panel switch operation signal from the heater control panel RH.

WIRING DIAGRAM

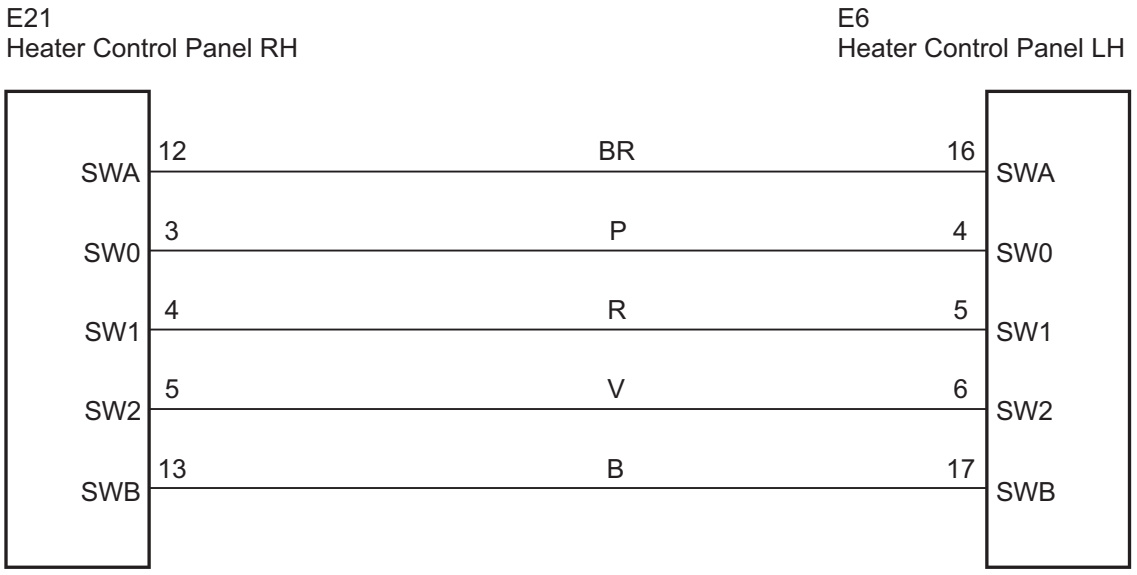

INSPECTION PROCEDURE

1	INSPECT HEATER CONTROL PANEL RH

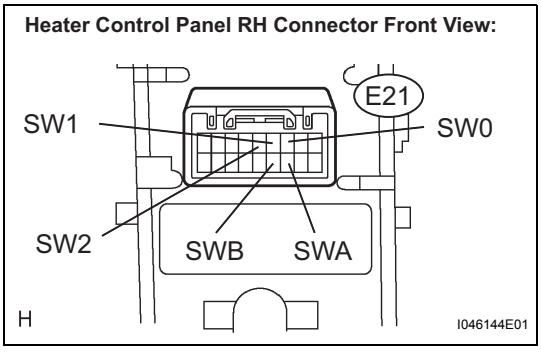

(a) Remove the heater control panel RH.
(b) Disconnect the connector from heater control panel RH.
(c) Measure the resistance according to the value(s) in the table below.

Resistance

Tester item (Symbols)	Condition	Specified condition
E21-13 (SWB) - E21-5 (SW2)	REC switch: ON	Below 1 Ω
E21-13 (SWB) - E21-3 (SW0)	OFF switch: ON	Below 1 Ω
E21-13 (SWB) - E21-4 (SW1)	P-TEMP UP switch: ON	Below 1 Ω
E21-12 (SWA) - E21-5 (SW2)	A/C switch: ON	Below 1 Ω
E21-12 (SWA) - E21-3 (SW0)	AUTO switch: ON	Below 1 Ω
E21-12 (SWA) - E21-4 (SW1)	P-TEMP DW switch: ON	Below 1 Ω

Tester item (Symbols)	Condition	Specified condition
E21-13 (SWB) - E21-5 (SW2)	REC switch: OFF	10 kΩ or higher
E21-13 (SWB) - E21-3 (SW0)	OFF switch: OFF	10 kΩ or higher
E21-13 (SWB) - E21-4 (SW1)	P-TEMP UP switch: OFF	10 kΩ or higher
E21-12 (SWA) - E21-5 (SW2)	A/C switch: OFF	10 kΩ or higher
E21-12 (SWA) - E21-3 (SW0)	AUTO switch: OFF	10 kΩ or higher
E21-12 (SWA) - E21-4 (SW1)	P-TEMP DW switch: OFF	10 kΩ or higher

NG → REPLACE HEATER CONTROL PANEL RH

OK

2 CHECK HARNESS AND CONNECTOR (HEATER CONTROL PANEL RH - HEATER CONTROL PANEL LH)

Heater Control Panel RH Connector Wire Harness View:

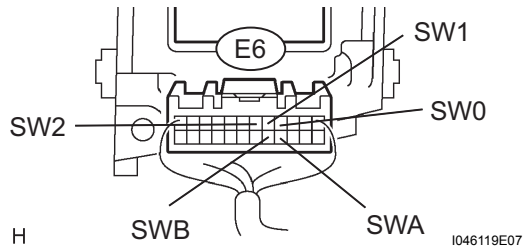

Heater Control Panel LH Connector Wire Harness View:

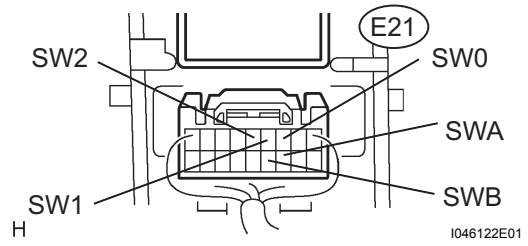

(a) Disconnect the connector from heater control panel LH.

(b) Measure the resistance according to the value(s) in the table below.

Resistance

Tester connection (Symbols)	Condition	Specified condition
E6-16 (SWA) - E21-12 (SWA)	Always	Below 1 Ω
E6-4 (SW0) - E21-3 (SW0)	Always	Below 1 Ω
E6-5 (SW1) - E21-4 (SW1)	Always	Below 1 Ω
E6-6 (SW2) - E21-5 (SW2)	Always	Below 1 Ω
E6-17 (SWB) - E21-13 (SWB)	Always	Below 1 Ω
E6-16 (SWA) - Body ground	Always	10 kΩ or higher
E6-4 (SW0) - Body ground	Always	10 kΩ or higher
E6-5 (SW1) - Body ground	Always	10 kΩ or higher
E6-6 (SW2) - Body ground	Always	10 kΩ or higher

AC

Tester connection (Symbols)	Condition	Specified condition
E6-17 (SWB) - Body ground	Always	10 kΩ or higher

NG → REPAIR OR REPLACE HARNESS OR CONNECTOR

OK

PROCEED TO NEXT CIRCUIT INSPECTION SHOWN IN PROBLEM SYMPTOMS TABLE

Seat Blower Control Circuit

DESCRIPTION

The seat blower changes airflow volume according to a signal from the A/C amplifier.

WIRING DIAGRAM

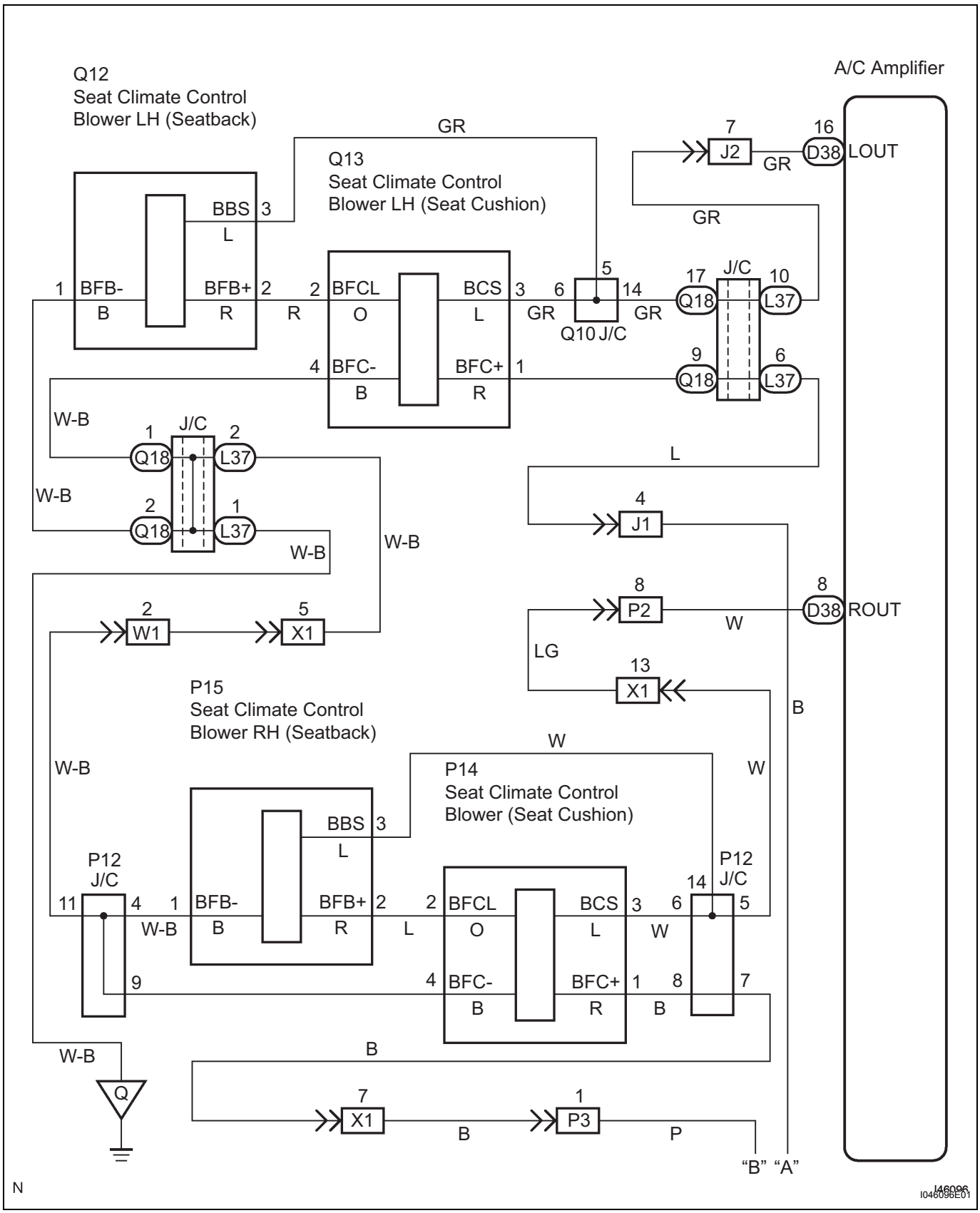

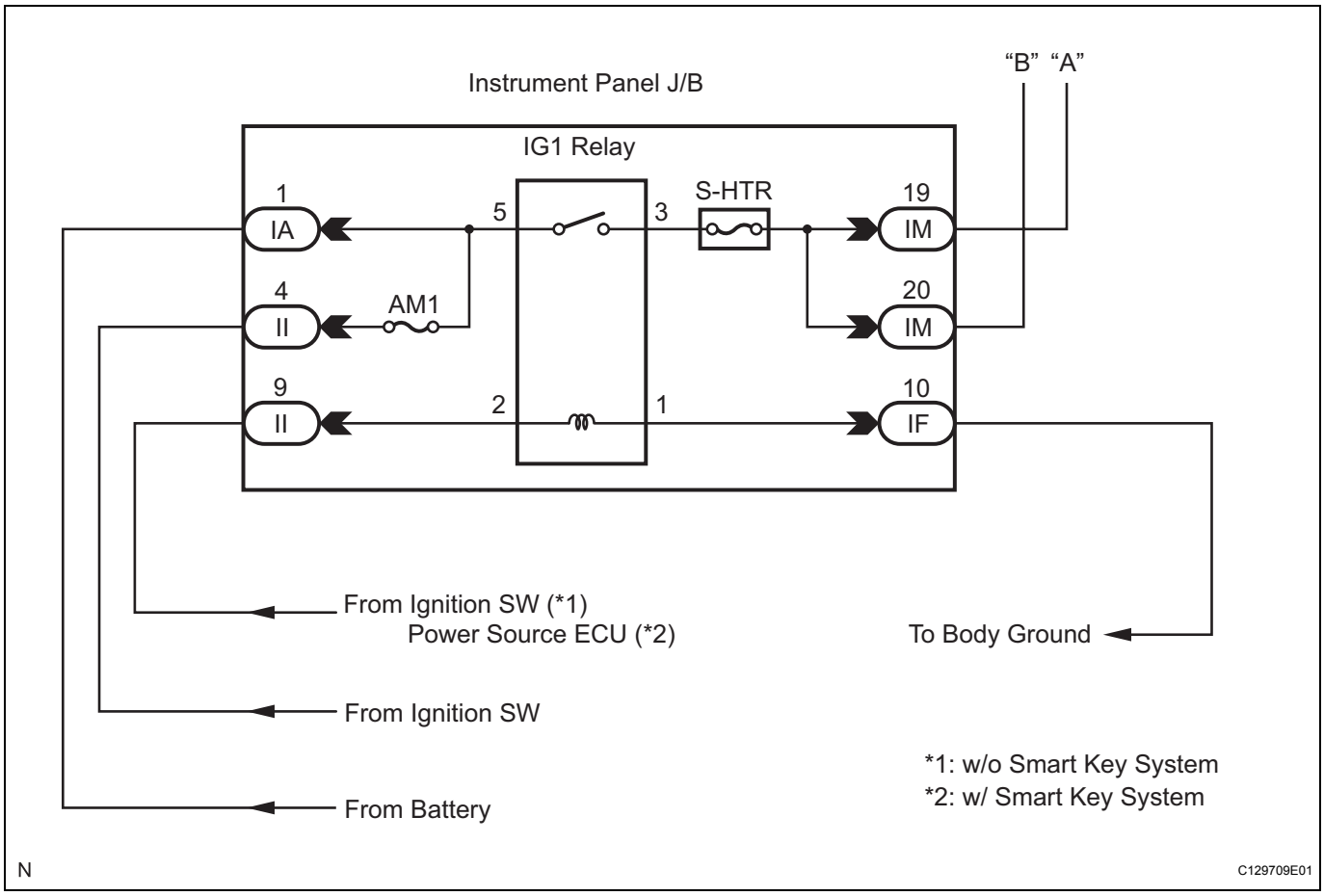

INSPECTION PROCEDURE

1	INSPECT FUSE (S-HTR)

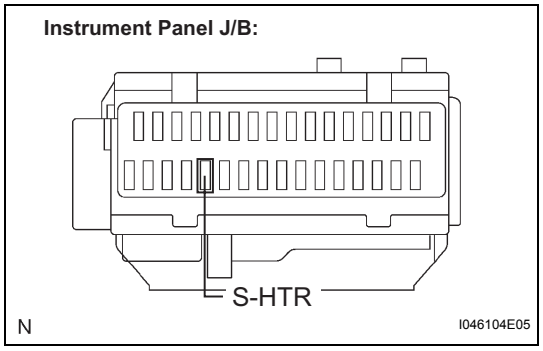

(a) Remove the S-HTR fuse from the instrument panel J/B.
(b) Measure the resistance according to the value(s) in the table below.

Resistance

Tester item	Condition	Specified condition
S-HTR fuse	Always	Below 1 Ω

NG → **REPLACE FUSE (S-HTR)**

OK

AC

2 CHECK HARNESS AND CONNECTOR (AIR CONDITIONING AMPLIFIER - SEAT CLIMATE CONTROL BLOWER)

Air Conditioning Amplifier Connector Wire Harness View:

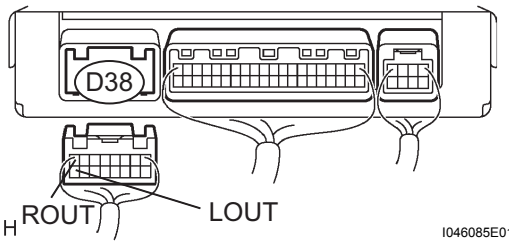

(a) Disconnect the connector from A/C amplifier.

Seat Climate Control Blower Connector Front View:

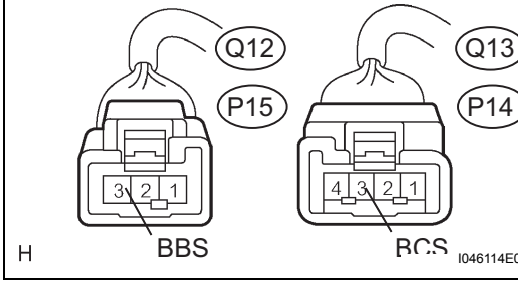

(b) Disconnect the connector from the seat climate control blower.

(c) Measure the resistance according to the value(s) in the table below.

Resistance

Tester connection (Symbols)	Condition	Specified condition
D38-16 (LOUT) - Q13-3 (BCS)	Always	Below 1 Ω
D38-16 (LOUT) - Q12-3 (BBS)	Always	Below 1 Ω
D38-8 (ROUT) - P14-3 (BCS)	Always	Below 1 Ω
D38-8 (ROUT) - P15-3 (BBS)	Always	Below 1 Ω
D38-16 (LOUT) - Body ground	Always	10 kΩ or higher
D38-8 (ROUT) - Body ground	Always	10 kΩ or higher

NG → **REPAIR OR REPLACE HARNESS OR CONNECTOR**

OK

3 CHECK HARNESS AND CONNECTOR (SEAT CUSHION CLIMATE BLOWER - SEAT BACK CLIMATE BLOWER)

Seat Climate Control Blower Connector Front View:

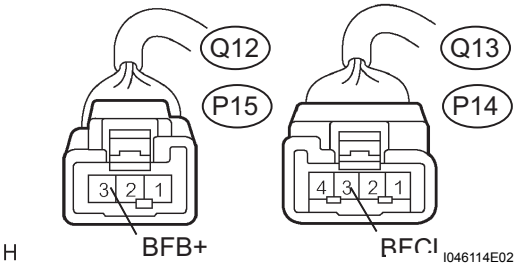

(a) Measure the resistance according to the value(s) in the table below.

Resistance

Tester connection (Symbols)	Condition	Specified condition
Q12-2 (BFB+) - Q13-2 (BFCL)	Always	Below 1 Ω
P15-2 (BFB+) - P14-2 (BFCL)	Always	Below 1 Ω
Q12-2 (BFB+) - Body ground	Always	10 kΩ or higher

AC

Tester connection (Symbols)	Condition	Specified condition
P15-2 (BFB+) - Body ground	Always	10 kΩ or higher

NG → REPAIR OR REPLACE HARNESS OR CONNECTOR

OK

4 CHECK HARNESS AND CONNECTOR (SEAT CLIMATE CONTROL BLOWER - BATTERY)

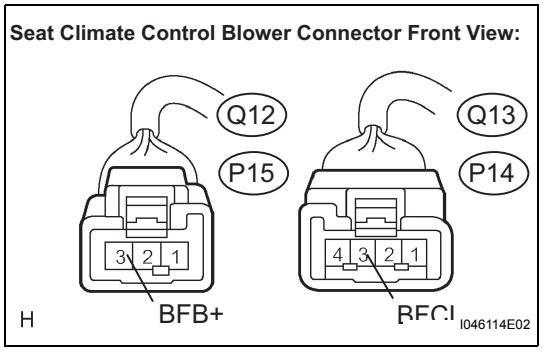

(a) Measure the voltage according to the value(s) in the table below.

Resistance

Tester connection (Symbols)	Condition	Specified condition
Q13-1 (BFC+) - Body ground	Ignition switch off	Below 1 Ω
Q13-1 (BFC+) - Body ground	Ignition switch on (IG)	10 to 14 V
P14-1 (BFC+) - Body ground	Ignition switch off	Below 1 Ω
P14-1 (BFC+) - Body ground	Ignition switch on (IG)	10 to 14 V

Result

Result	Proceed to
OK	A
NG (w/o Smart key system)	B
NG (w/ Smart key system)	C

B → GO TO STARTING SYSTEM

C → GO TO PUSH BUTTON START SYSTEM

A

5 CHECK HARNESS AND CONNECTOR (SEAT CLIMATE CONTROL BLOWER - BODY GROUND)

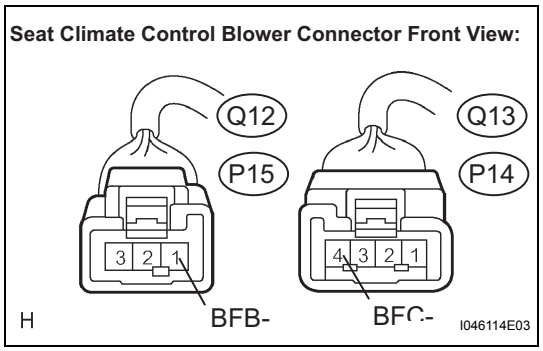

(a) Measure the resistance according to the value(s) in the table below.

Resistance

Tester connection (Symbols)	Condition	Specified condition
Q12-1 (BFB-) - Body ground	Always	Below 1 Ω
Q13-4 (BFC-) - Body ground	Always	Below 1 Ω
P14-4 (BFC-) - Body ground	Always	Below 1 Ω
P15-1 (BFB-) - Body ground	Always	Below 1 Ω

AC

NG → REPAIR OR REPLACE HARNESS OR CONNECTOR

OK

6 INSPECT AIR CONDITIONING AMPLIFIER

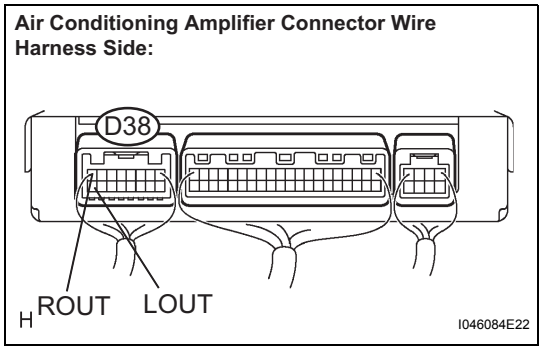

(a) Remove the A/C amplifier with connectors still connected.
(b) Turn the ignition switch on (IG).

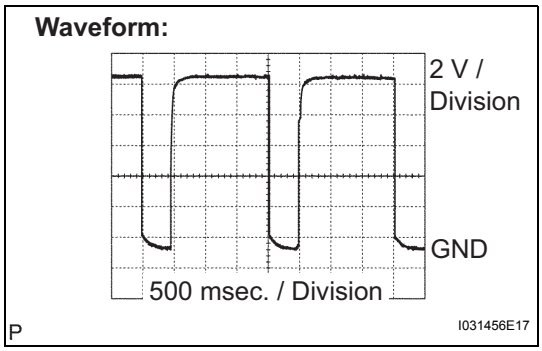

(c) Measure the waveform according to the value(s).
Waveform

Tester connection (Symbols)	Connection	Specified condition
D38-8 (ROUT) - Body ground	Seat heater switch: ON	See waveform
D38-16 (LOUT) - Body ground	Seat heater switch: ON	See waveform

OK:
Waveform appears as shown in the illustration.
HINT:
Waveform varies with the blower level.

NG → REPLACE AIR CONDITIONING AMPLIFIER

OK

REPLACE SEAT CLIMATE CONTROL BLOWER

Seat Heater Control Power Source Circuit

DESCRIPTION

Battery voltage is supplied to the seat heater control sub-assembly through the S-HTR fuse.

WIRING DIAGRAM

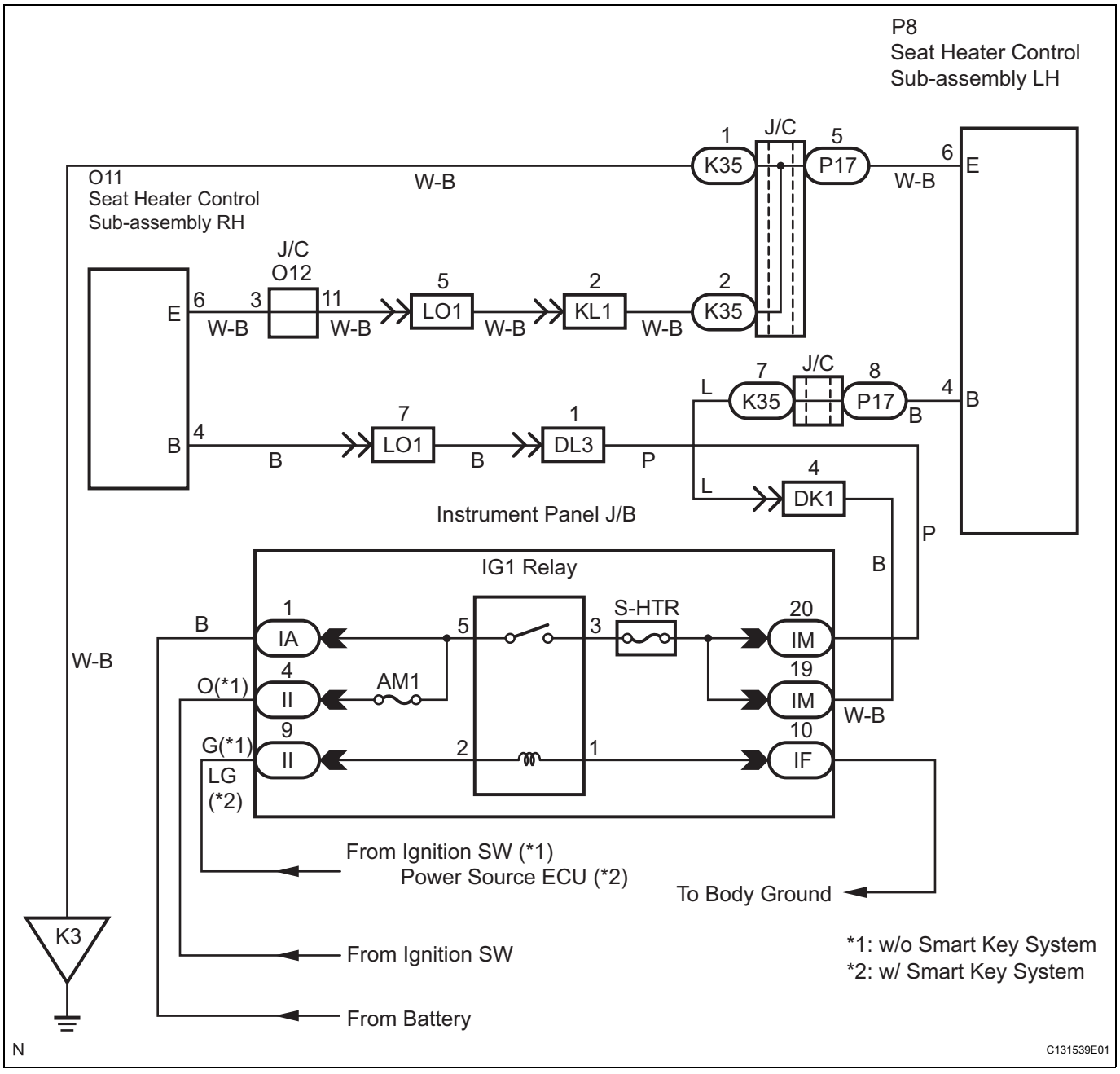

INSPECTION PROCEDURE

1	CHECK HARNESS AND CONNECTOR (B - BATTERY)

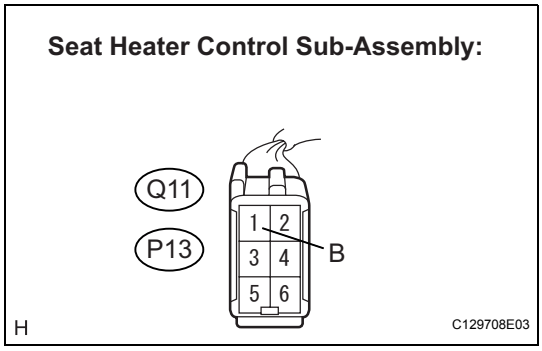

(a) Disconnect the connector from seat heater control sub-assembly.
(b) Measure the voltage according to the value(s) in the table below.

Voltage

Tester connection (Symbols)	Condition	Specified condition
Q11-1 (B) - Body ground	Ignition switch on (IG)	10 to 14 V
Q11-1 (B) - Body ground	Ignition switch off	Below 1 V
P13-1 (B) - Body ground	Ignition switch on (IG)	10 to 14 V
P13-1 (B) - Body ground	Ignition switch off	Below 1 V

Result

Result	Proceed to
OK	A
NG (w/o Smart key system)	B
NG (w/ Smart key system)	C

B → GO TO STARTING SYSTEM

C → GO TO PUSH BUTTON START SYSTEM

A

2	CHECK HARNESS AND CONNECTOR (E - BODY GROUND)

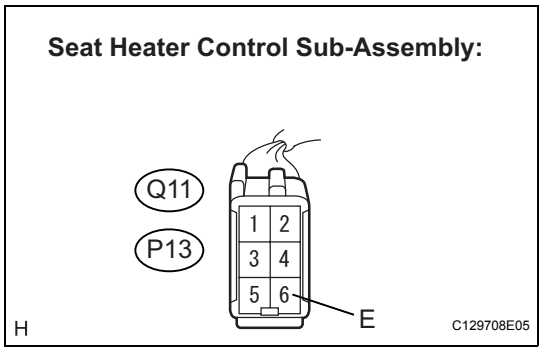

(a) Measure the resistance according to the value(s) in the table below.

Resistance

Tester connection (Symbols)	Condition	Specified condition
Q11-6 (E) - Body ground	Always	Below 1 Ω
P13-6 (E) - body ground	Always	Below 1 Ω

NG → REPAIR OR REPLACE HARNESS OR CONNECTOR

OK

PROCEED TO NEXT CIRCUIT INSPECTION SHOWN IN PROBLEM SYMPTOMS TABLE

CUSTOMIZE PARAMETERS

HINT:
The followings are the possible items to be customized.
NOTICE:

- **After confirming whether the items of the customer's request is applicable or not for the customized items, perform the customization.**
- **Be sure to record the current value before customizing.**
- **When troubleshooting, be aware that function may be set to OFF by customizing. (Example: In the case of "The wireless operation does not function", check that wireless operation is not set to OFF by customizing, then perform the troubleshooting.)**

AIR CONDITIONER

DISPLAY (ITEM)	DEFAULT	CONTENTS	SETTING
SET TEMP SHIFT (Set Temperature Shift)	NORMAL	To control with the shifted temperature against the display temperature.	+2C / +1C / NORMAL / -1C / -2C
AIR INLET MODE (Air Inlet Mode)	AUTO	In case of turning the A/C ON when you desire to make the compartment cool down quickly, this is the function to change the mode automatically to RECIRCULATED mode.	MANUAL / AUTO
COMPRESSOR MODE (Compressor Mode)	AUTO	Function to turn the A/C ON automatically by pressing the AUTO button when the blower is ON and the A/C is OFF.	MANUAL / AUTO
COMPRS / DEF OPER (Compressor / Air Inlet DEF Operation)	LINK	Function to turn the A/C ON automatically linking with the FRONT DEF button when A/C OFF.	NORMAL / LINK
EVAP CTRL (Evaporator Control)	AUTO	Function to set the evaporator control to the AUTOMATIC position (AUTO) to save power or the coldest position (MANUAL) to dehumidify the air and to prevent the windows fogging up.	MANUAL / AUTO
BUTTON PRS BUZ (Button Press Buzzer)	ON	Function to sound a buzzer when a button is pressed.	OFF / ON
FOOT / EF MODE (Foot / DEF auto mode)	ON	Function to turn the air flow from FOOT / DEF ON automatically when AUTO MODE is ON.	OFF / ON
AUTO BLOW UP (Foot / DEF automatic blow up function)	ON	Function to switch the blower level automatically when the defroster is ON.	OFF / ON
AMBIENT TMP SFT (Ambient Temperature Shift)	NORMAL	To control with the shifted ambient temperature against the display ambient temperature.	+3C / +2C / +1C / NORMAL / -1C / -2C / -3C
FOOT AIR LEAK (Foot Air Leak)	ON	Function to cut off the airstream felt underfoot while the vehicle is moving.	OFF / ON

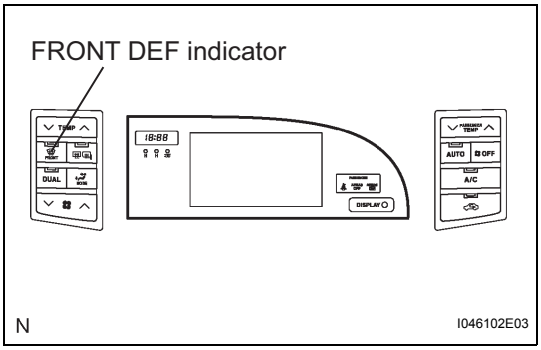

INITIALIZATION

1. STEP MOTORS INITIALIZING FUNCTION

(a) Step motor initializing procedure (Automatic initializing).

(1) When the battery is reconnected and the ignition switch is turned to the on (IG) for the first time, the initializing function of the step motors is activated. IN this case, the "FRONT DEF" indicator blinks.
HINT:
Initialization will be automatically completed after several seconds.

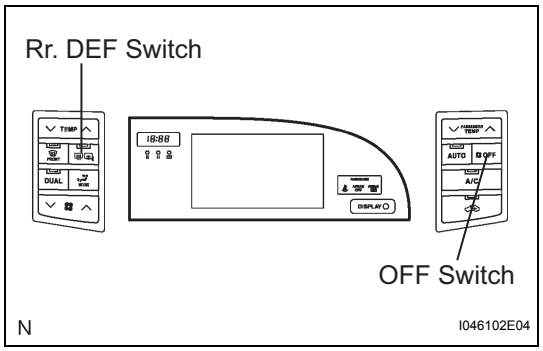

(2) If mode indication is different from the actual air outlet in actuator check, turn the ignition switch on (IG) while pressing the "Rr, DEF" and "OFF" switches simultaneously. Step motor initialization occurs and the "FRONT DEF" indicator blinks.

Seat Heater Switch Circuit

DESCRIPTION

Voltage of 5 V is output from the S5-4 terminal of the A/C amplifier to the seat heater SW. The SW4 and SW5 terminals of the A/C amplifier read changes in voltage sent back from the seat heater SW. The voltage sent back from the seat heater SW differs according to the set temperature of the seat heater SW.

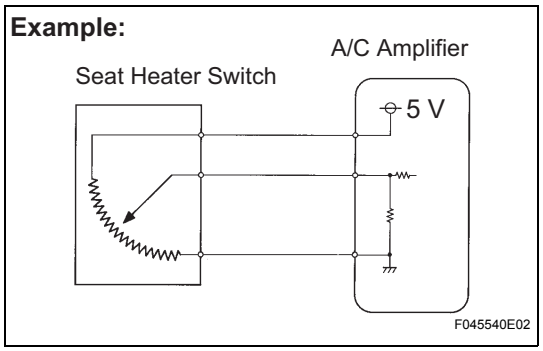

WIRING DIAGRAM

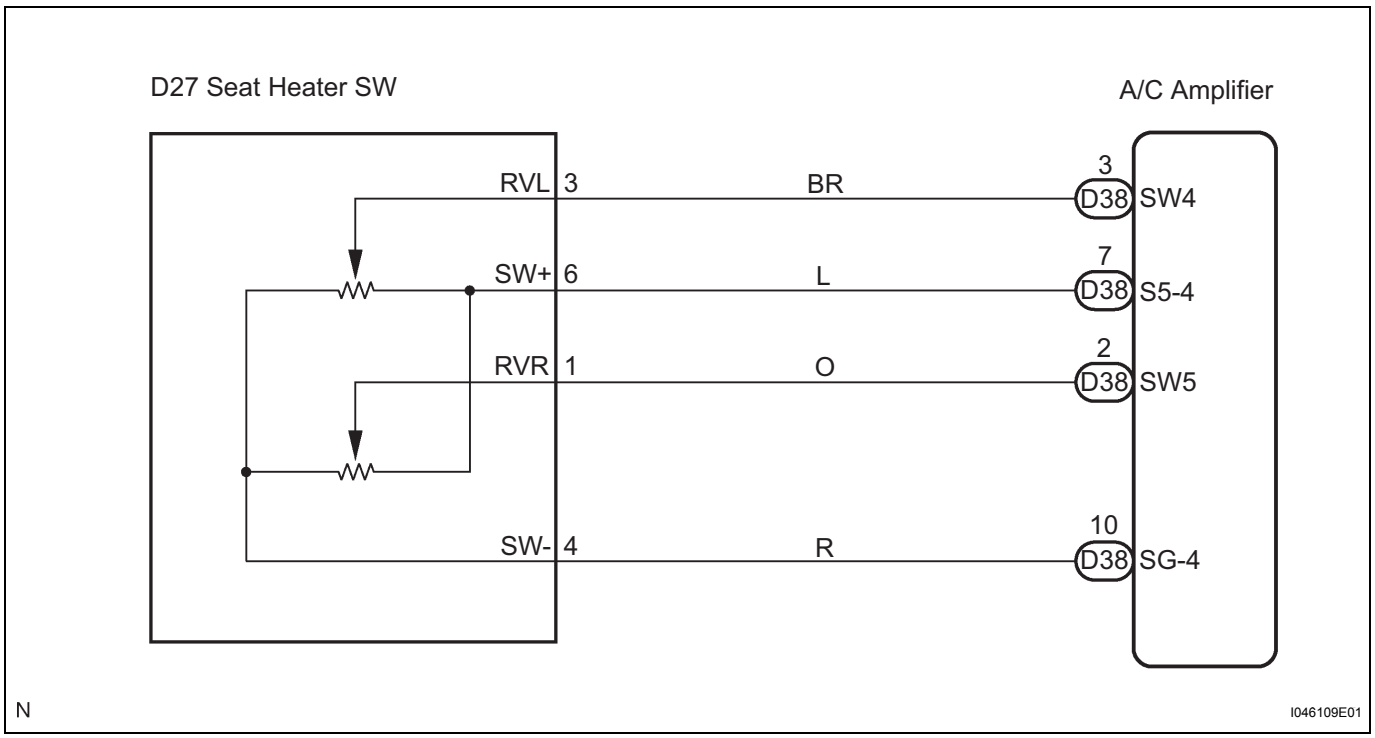

INSPECTION PROCEDURE

1	INSPECT AIR CONDITIONING AMPLIFIER

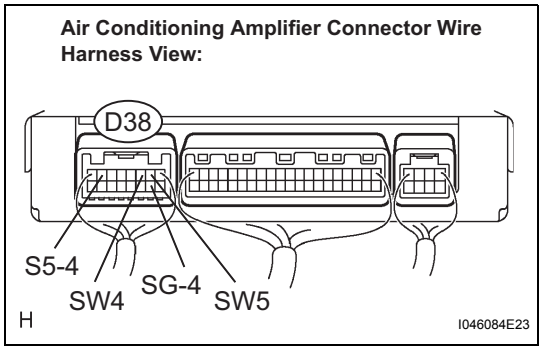

(a) Remove the A/C amplifier with connectors still connected.
(b) Turn the ignition switch on (IG).
(c) Measure the voltage according to the value(s) in the table below.

Voltage

Tester connection (Symbols)	Condition	Specified condition
D38-7 (S5-4) - D38-10 (SG-4)	Ignition switch on (IG)	4.5 to 5.5 V
D38-3 (SW4), D38-2 (SW5) - D38-10 (SG-4)	Seat heater switch: COOL (HI)	0.17 V
D38-3 (SW4), D38-2 (SW5) - D38-10 (SG-4)	Seat heater switch: COOL (MID)	0.48 to 1.17 V
D38-3 (SW4), D38-2 (SW5) - D38-10 (SG-4)	Seat heater switch: COOL (LO)	1.31 to 2.01 V
D38-3 (SW4), D38-2 (SW5) - D38-10 (SG-4)	Seat heater switch: OFF	2.15 to 2.83 V
D38-3 (SW4), D38-2 (SW5) - D38-10 (SG-4)	Seat heater switch: HOT (LO)	2.97 to 3.67 V
D38-3 (SW4), D38-2 (SW5) - D38-10 (SG-4)	Seat heater switch: HOT (MID)	3.81 to 4.49 V
D38-3 (SW4), D38-2 (SW5) - D38-10 (SG-4)	Seat heater switch: HOT (HI)	4.8 V

NG → Go to step 2

OK

PROCEED TO NEXT CIRCUIT INSPECTION SHOWN IN PROBLEM SYMPTOMS TABLE

2	CHECK HARNESS AND CONNECTOR (AIR CONDITIONING AMPLIFIER - SEAT HEATER SWITCH)

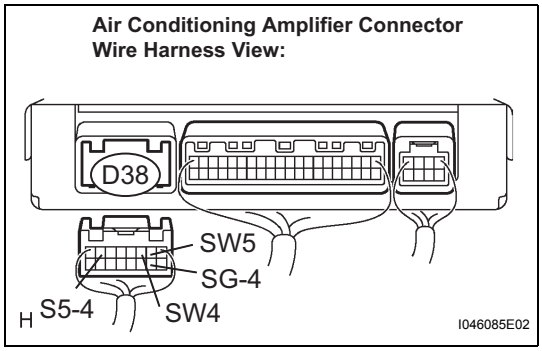

(a) Disconnect the connector from A/C amplifier.

Seat Heater Switch Connector Wire Harness View:

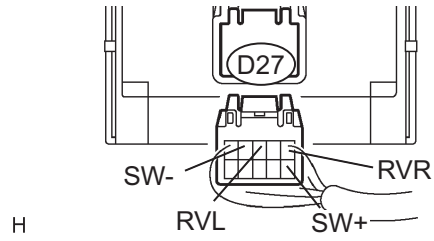

(b) Disconnect the connector from the seat heater switch.
(c) Measure the resistance according to the value(s) in the table below.

Resistance

Tester connection (Symbols)	Condition	Specified condition
D38-3 (SW4) - D27-3 (RVL)	Always	Below 1 Ω
D38-2 (SW5) - D27-1 (RVR)	Always	Below 1 Ω
D38-7 (S5-4) - D27-6 (SW+)	Always	Below 1 Ω
D38-10 (SG-4) - D27-4 (SW-)	Always	Below 1 Ω
D38-3 (SW4) - Body ground	Always	10 kΩ or higher
D38-2 (SW5) - Body ground	Always	10 kΩ or higher
D38-7 (S5-4) - Body ground	Always	10 kΩ or higher
D38-10 (SG-4) - Body ground	Always	10 kΩ or higher

NG → **REPAIR OR REPLACE HARNESS OR CONNECTOR**

OK

3 INSPECT SEAT HEATER SWITCH

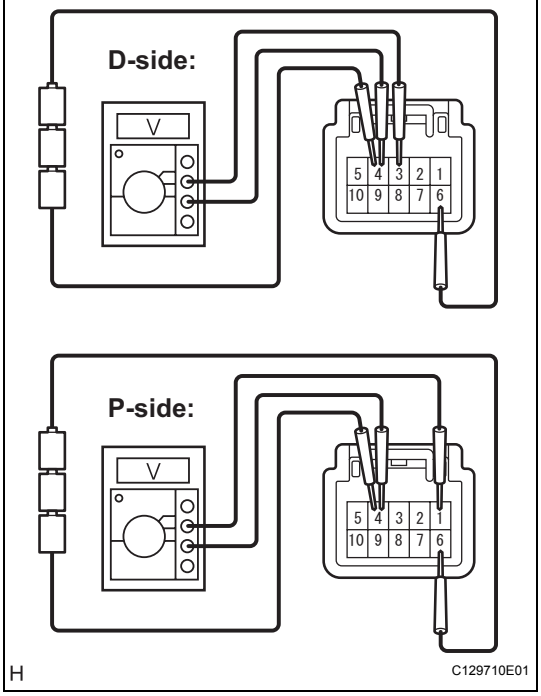

(a) Connect the 3 dry cell batteries (1.5 V) in series.
(b) Remove the seat heater switch.
(c) Connect the positive (+) lead from the battery to terminal 6 and the negative (-) lead from the battery to terminal 4.
(d) Measure the voltage between terminals 3*1, 1*2 and 4 according to the value(s) in the table below.

Voltage

Tester connection (Symbols)	Condition	Specified condition
D27-6 (SW+) - D27-4 (SW-)	Always	4.0 to 5.0 V
D27-3 (RVL)*1, D27-1 (RVR)*2 - D27-4 (SW-)	Seat heater switch: COOL (HI)	0.15 V
D27-3 (RVL)*1, D27-1 (RVR)*2 - D27-4 (SW-)	Seat heater switch: COOL (MID)	0.43 to 1.05 V
D27-3 (RVL)*1, D27-1 (RVR)*2 - D27-4 (SW-)	Seat heater switch: COOL (LO)	1.18 to 1.81 V
D27-3 (RVL)*1, D27-1 (RVR)*2 - D27-4 (SW-)	Seat heater switch: OFF	1.94 to 2.55 V
D27-3 (RVL)*1, D27-1 (RVR)*2 - D27-4 (SW-)	Seat heater switch: HOT (LO)	2.67 to 3.30 V
D27-3 (RVL)*1, D27-1 (RVR)*2 - D27-4 (SW-)	Seat heater switch: HOT (MID)	3.43 to 4.04 V

AC

Tester connection (Symbols)	Condition	Specified condition
D27-3 (RVL)*1, D27-1 (RVR)*2 - D27-4 (SW-)	Seat heater switch: HOT (HI)	4.3 V

*1: Driver side
*2: Front passenger side

NG → REPLACE SEAT HEATER SWITCH

OK

REPLACE AIR CONDITIONING AMPLIFIER

Seat Heater Switch Indicator Circuit

DESCRIPTION

Battery voltage is supplied to the seat heater switch through the S-HTR fuse. When the seat heater switch is turned on, the seat heater switch indicator comes on.

WIRING DIAGRAM

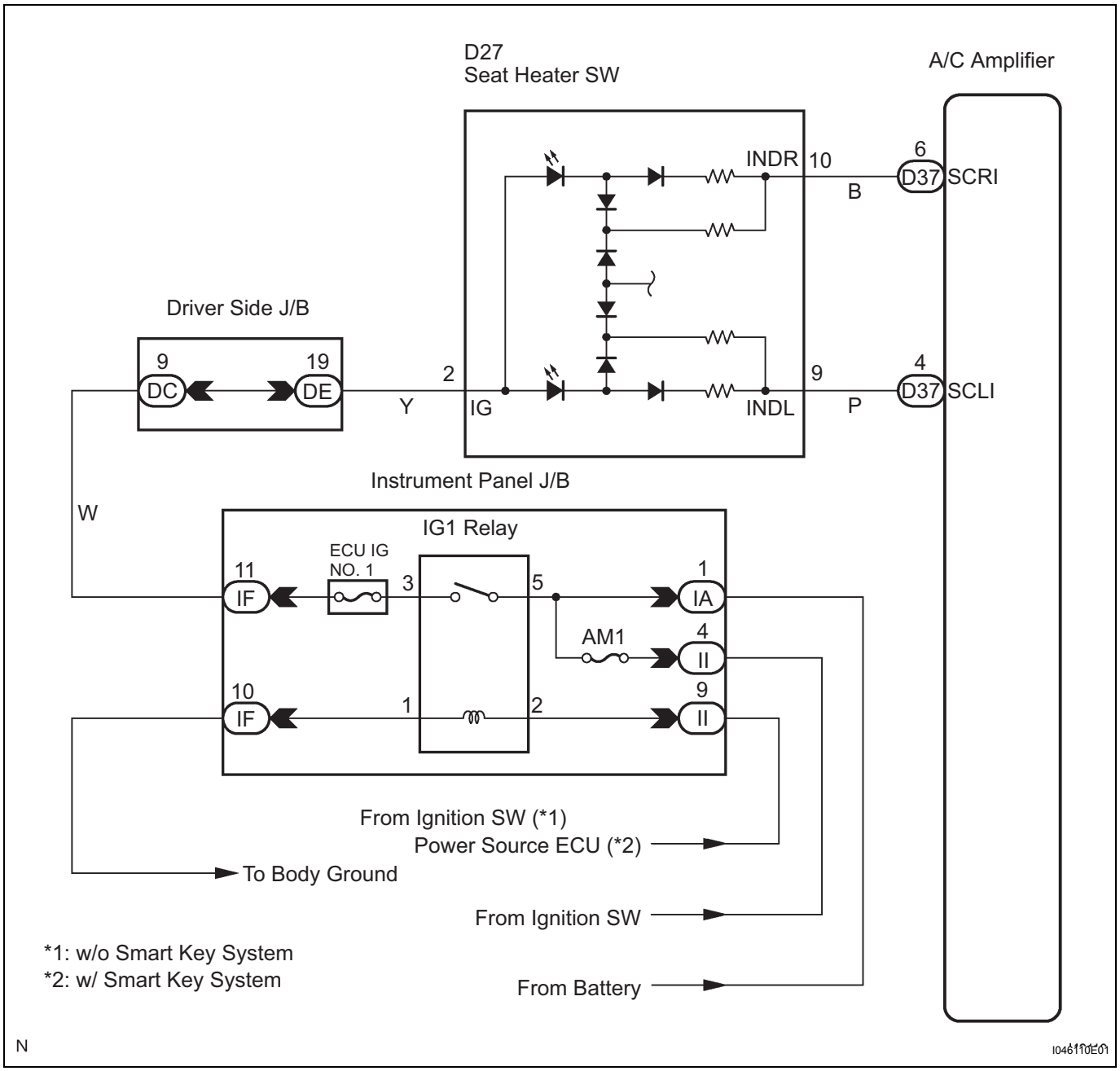

AC

INSPECTION PROCEDURE

1 INSPECT FUSE (ECU IG NO. 1)

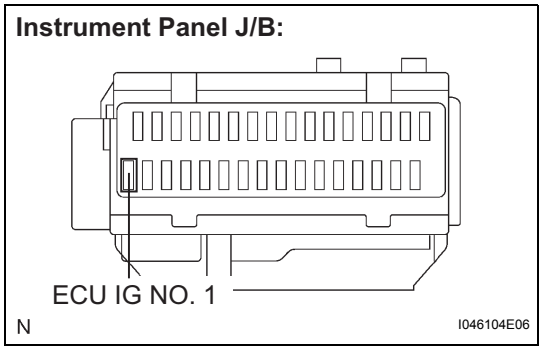

(a) Remove the ECU IG NO. 1 fuse from the instrument panel J/B.
(b) Measure the resistance according to the value(s) in the table below.

Resistance

Tester item	Condition	Specified condition
IG NO. 1 fuse	Always	Below 1 Ω

NG → **REPLACE FUSE (ECU IG NO. 1)**

OK

2 CHECK HARNESS AND CONNECTOR (SEAT HEATER SWITCH - BATTERY)

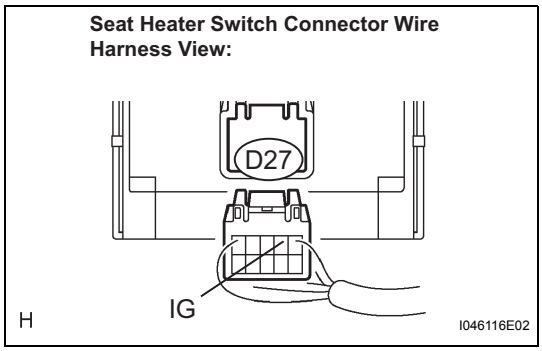

(a) Disconnect the connector from seat heater switch.
(b) Measure the voltage according to the value(s) in the table below.

Voltage

Tester connection (Symbols)	Condition	Specified condition
D27-2 (IG) - Body ground	Ignition switch on (IG)	10 to 14 V
D27-2 (IG) - Body ground	Ignition switch off	Below 1 V

NG → **REPAIR OR REPLACE HARNESS OR CONNECTOR**

OK

3 INSPECT SEAT HEATER SWITCH

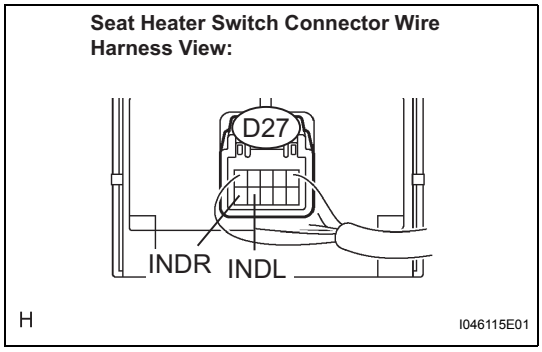

(a) Reconnect the connector to the seat heater switch.
(b) Measure the voltage according to the value(s) in the table below.

Voltage

Tester connection (Symbols)	Condition	Specified condition
D27-10 (INDR) - Body ground	Ignition switch on (IG)	10 to 14 V
D27-9 (INDL) - Body ground	Ignition switch on (IG)	10 to 14 V
D27-10 (INDR) - Body ground	Ignition switch off	Below 1 V
D27-9 (INDL) - Body ground	Ignition switch off	Below 1 V

AC

NG → REPLACE SEAT HEATER SWITCH

OK

4	CHECK HARNESS AND CONNECTOR (AIR CONDITIONING AMPLIFIER - SEAT HEATER SWITCH)

Air Conditioning Amplifier Connector Wire Harness View:

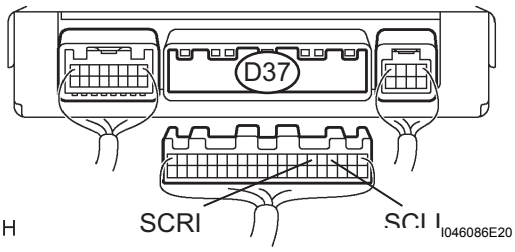

(a) Disconnect the connector from A/C amplifier.

Seat Heater Switch Connector Wire Harness View:

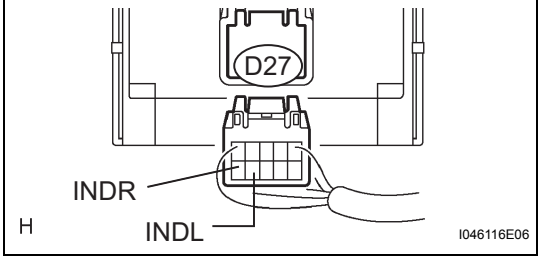

(b) Disconnect the connector from the seat heater switch.
(c) Measure the resistance according to the value(s) in the table below.

Resistance

Tester connection (Symbols)	Condition	Specified condition
D37-6 (SCRI) - D27-10 (INDR)	Always	Below 1 Ω
D37-4 (SCLI) - D27-9 (INDL)	Always	Below 1 Ω
D37-6 (SCRI) - D27-10 (INDR)	Always	10 kΩ or higher
D37-4 (SCLI) - D27-9 (INDL)	Always	10 kΩ or higher

NG → REPAIR OR REPLACE HARNESS OR CONNECTOR

OK

REPLACE AIR CONDITIONING AMPLIFIER

REFRIGERANT LINE

COMPONENTS

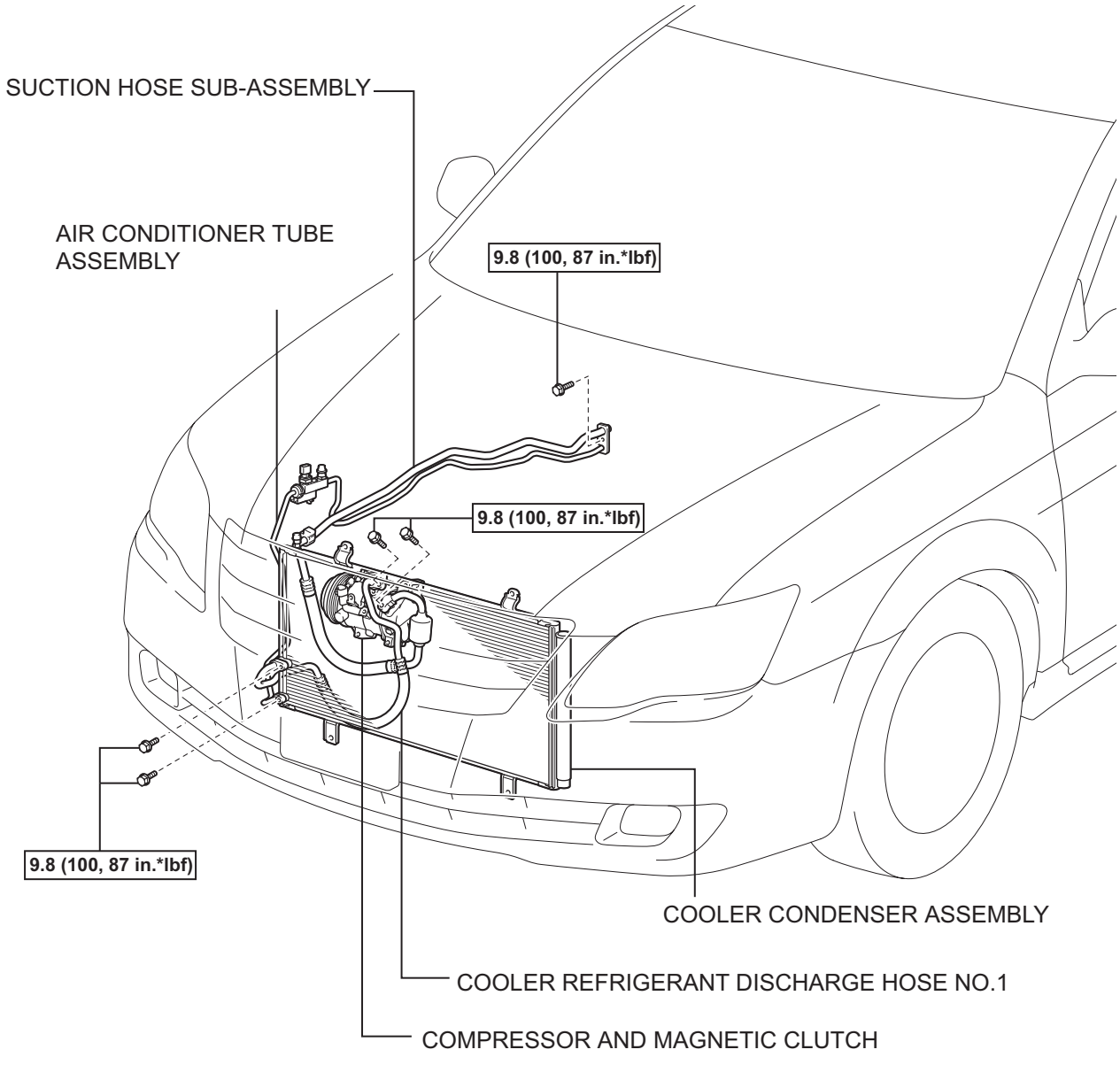

N*m (kgf*cm, ft.*lbf) : Specified torque

P

C114914E01

AC

Steering Pad Switch Circuit

DESCRIPTION

AUTO, OFF, TEMP UP (+), TEMP DOWN (-) switches are located on the steering pad switch. The resistance of the steering pad switch changes in accordance with switch operation. The heater control panel outputs voltage to the steering pad switch and reads voltage changes according to the resistance changes with switch operation.

WIRING DIAGRAM

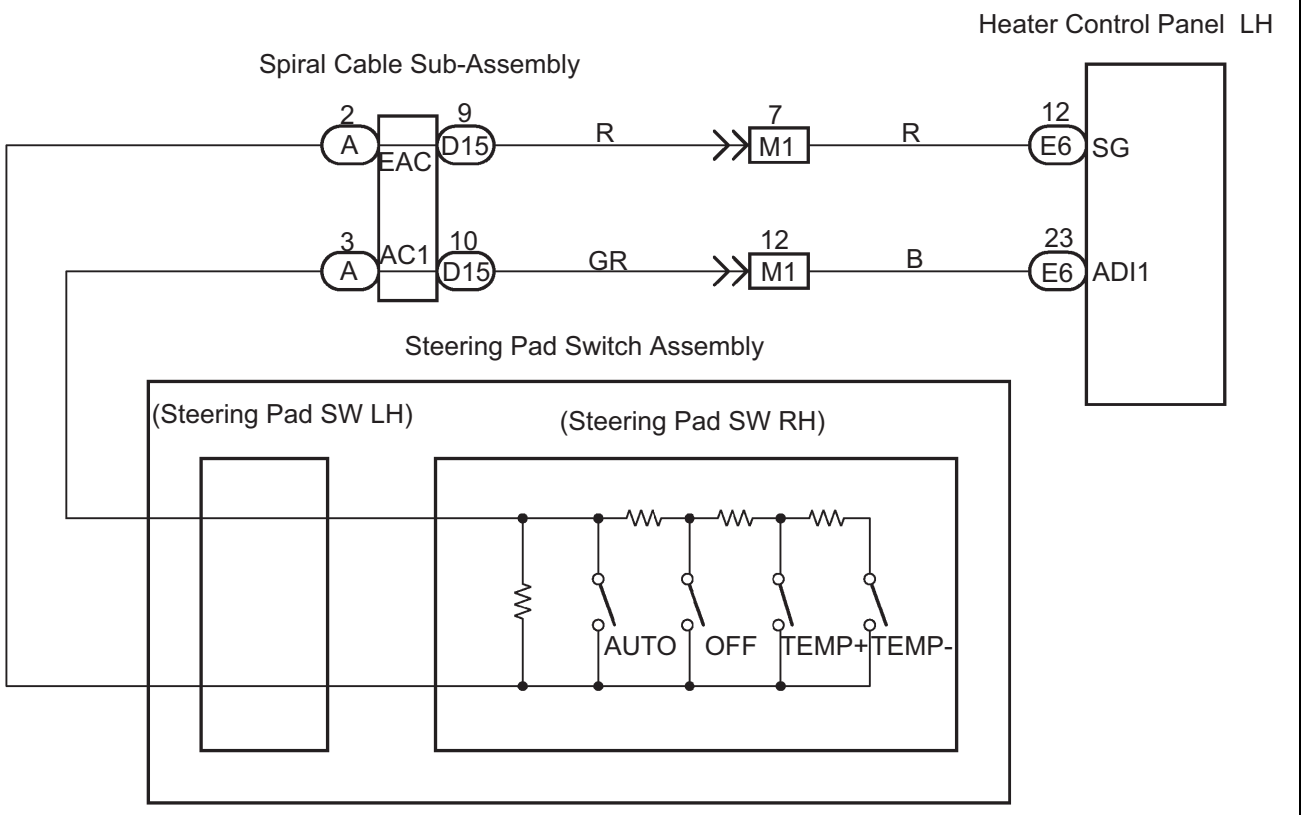

INSPECTION PROCEDURE

1	INSPECT HEATER CONTROL PANEL (ADI1 - SG)

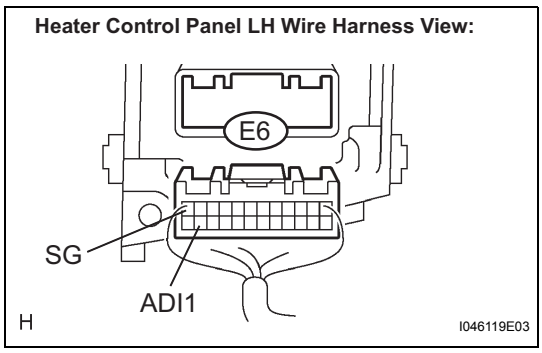

(a) Remove the heater control panel LH with connectors still connected.

(b) Measure the resistance according to the value(s) in the table below.

Resistance

Tester connection (Symbols)	Condition	Specified condition
E6-23 (ADI1) - E6-12 (SG)	AUTO switch: ON	Below 2.5 Ω
E6-23 (ADI1) - E6-12 (SG)	OFF switch: ON	330 Ω

AC

Tester connection (Symbols)	Condition	Specified condition
E6-23 (ADI1) - E6-12 (SG)	TEMP+ switch: ON	1,010 Ω
E6-23 (ADI1) - E6-12 (SG)	TEMP- switch: ON	3,210 Ω

NG → Go to step 2

OK

PROCEED TO NEXT CIRCUIT INSPECTION SHOWN IN PROBLEM SYMPTOMS TABLE

2 INSPECT STEERING PAD SWITCH ASSEMBLY (AC - EAC)

(a) Remove the steering pad switch assembly.

Steering Pad Switch Assembly Connector Front View:

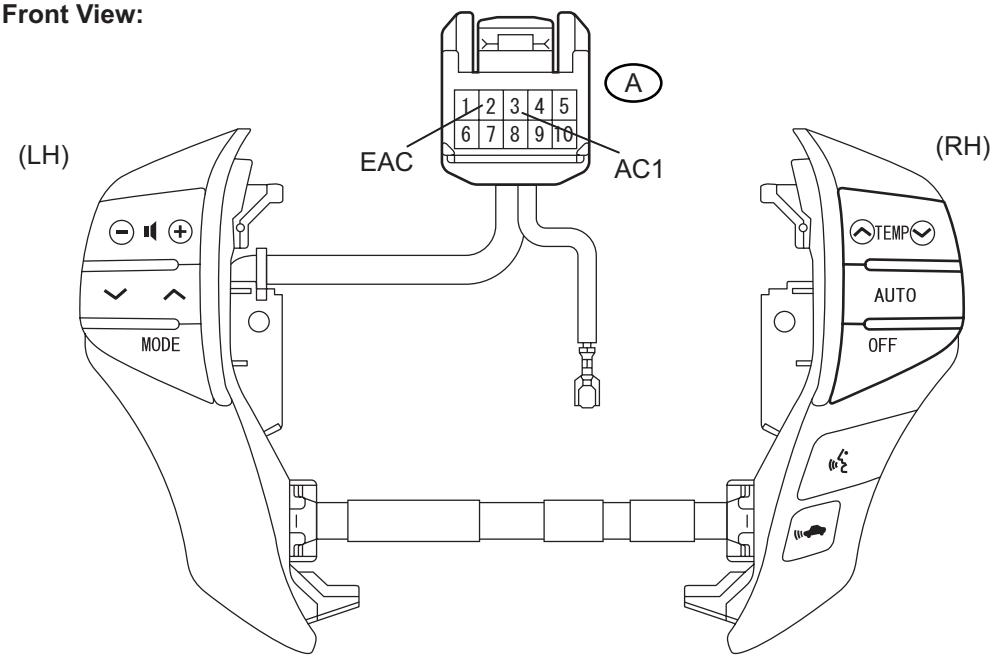

(b) Measure resistance according to the value(s) in the table below.

Resistance

Tester connection (Symbols)	Condition	Specified condition
A3 (AC1) - A2 (EAC)	AUTO switch: ON	Below 2.5 Ω
A3 (AC1) - A2 (EAC)	OFF switch: ON	330 Ω
A3 (AC1) - A2 (EAC)	TEMP+ switch: ON	1,010 Ω
A3 (AC1) - A2 (EAC)	TEMP- switch: ON	3,210 Ω

NG → REPLACE STEERING PAD SWITCH ASSEMBLY

OK

3	INSPECT SPIRAL CABLE SUB-ASSEMBLY

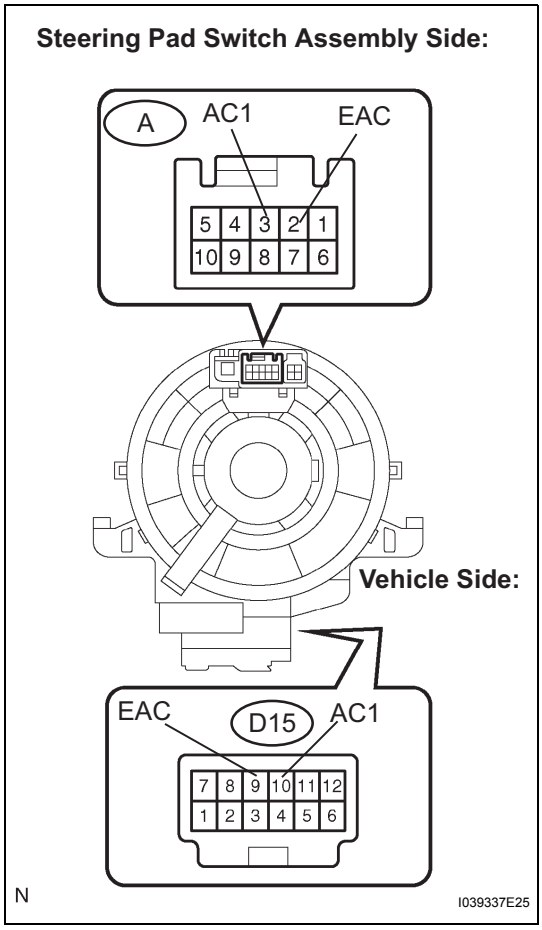

(a) Disconnect the connector from spiral cable sub-assembly.
(b) Measure resistance according to the value(s) in the table below.

Resistance

Tester connection (Symbols)	Condition	Specified condition
D15-10 (AC1) - A-3 (AC1)	Always	Below 1 Ω
D15-9 (EAC) - A-2 (EAC)	Always	Below 1 Ω

NG → REPLACE SPIRAL CABLE SUB-ASSEMBLY

OK

4	CHECK HARNESS AND CONNECTOR (HEATER CONTROL PANEL LH - SPIRAL CABLE SUB-ASSEMBLY)

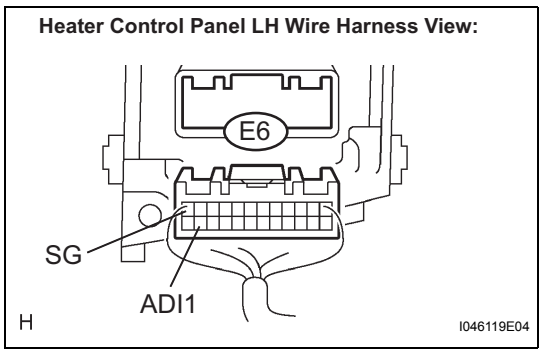

(a) Disconnect the connector from heater control panel LH.

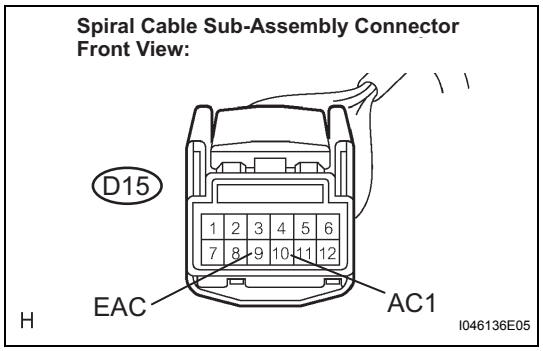

(b) Disconnect the connector from the spiral cable sub-assembly.

(c) Measure the resistance according to the value(s) in the table below.

Resistance

Tester connection	Condition	Specified condition
E6-23 (ADI1) - D15-10 (AC1)	Always	Below 1 Ω
E6-12 (SG) - D15-9 (EAC)	Always	Below 1 Ω
E6-23 (ADI1) - D15-10 (AC1)	Always	10 kΩ or higher
E6-12 (SG) - D15-9 (EAC)	Always	10 kΩ or higher

NG → **REPAIR OR REPLACE HARNESS OR CONNECTOR**

OK

PROCEED TO NEXT CIRCUIT INSPECTION SHOWN IN PROBLEM SYMPTOMS TABLE

IG Power Source Circuit

DESCRIPTION

The main power source is supplied to the A/C amplifier when the ignition switch is turned to the on (IG). The power source supplied is used for operating the A/C amplifier and servomotor, etc.

WIRING DIAGRAM

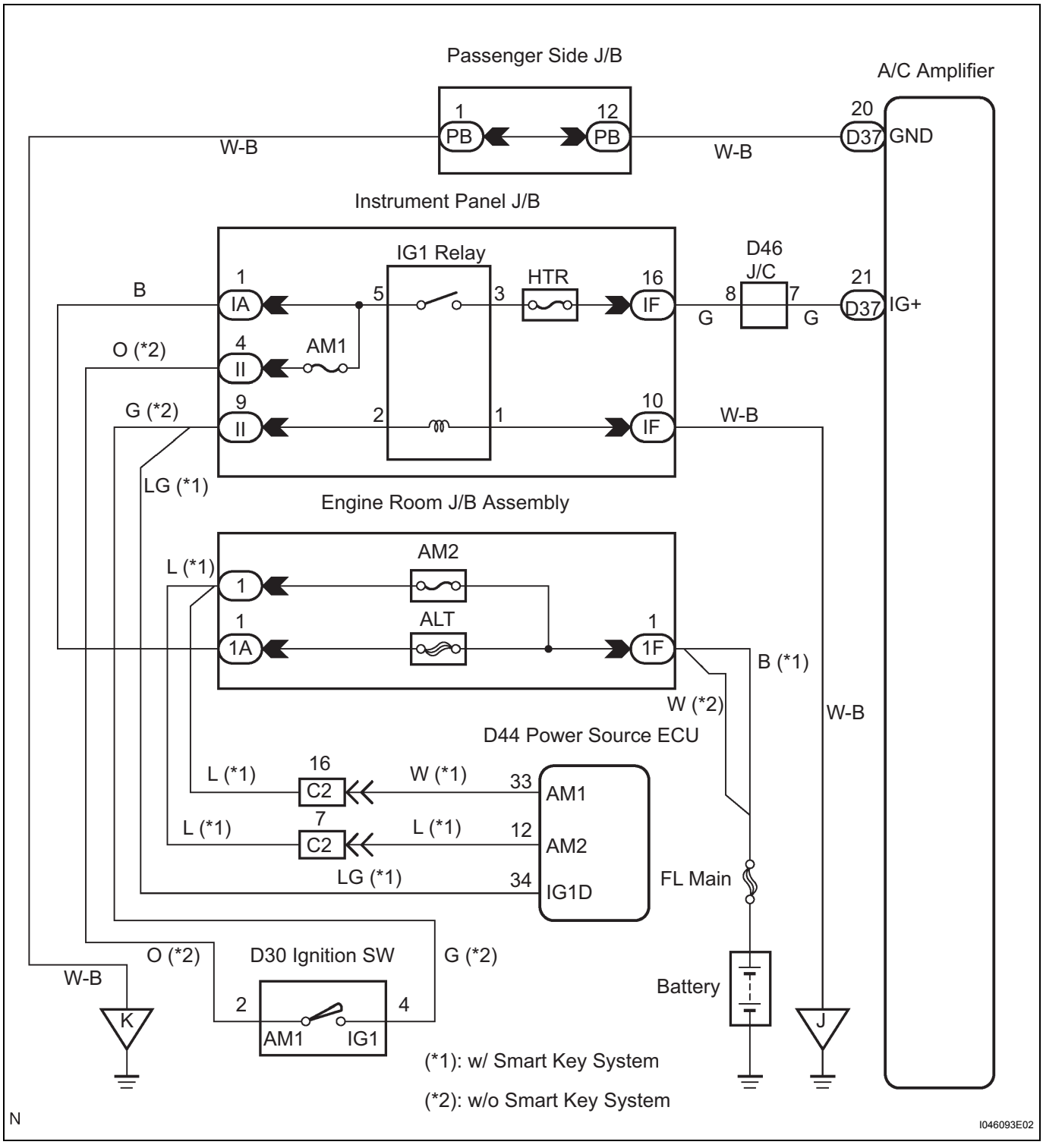

AC

INSPECTION PROCEDURE

HINT:
Start the engine before inspection. Check the IG1 relay or battery if the engine does not start.

1 INSPECT FUSE (HTR)

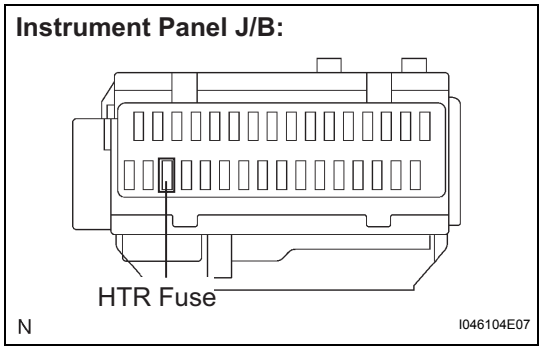

(a) Remove the HTR fuse from the instrument panel J/B.
(b) Measure the resistance according to the value(s) in the table below.

Resistance

Tester item	Condition	Specified condition
HTR fuse	Always	Below 1 Ω

NG → **REPLACE FUSE (HTR)**

OK

2 CHECK HARNESS AND CONNECTOR (AIR CONDITIONING AMPLIFIER - BATTERY)

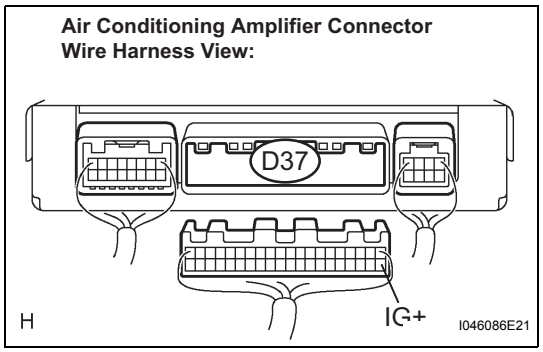

(a) Disconnect the connector from A/C amplifier.
(b) Measure the voltage according to the value(s) in the table below.

Voltage

Tester connection (Symbols)	Condition	Specified condition
D37-21 (IG+) - Body ground	Ignition switch off	Below 1.0 V
D37-21 (IG+) - Body ground	Ignition switch on (IG)	10 to 14 V

Result

Result	Proceed to
OK	A
NG (w/o Smart Key system)	B
NG (w/ Smart Key system)	C

B → **GO TO STARTING SYSTEM**

C → **GO TO PUSH BUTTON START SYSTEM**

A

3	CHECK HARNESS AND CONNECTOR (AIR CONDITIONING AMPLIFIER - BOY GROUND)

Air Conditioning Amplifier Connector Wire Harness View:

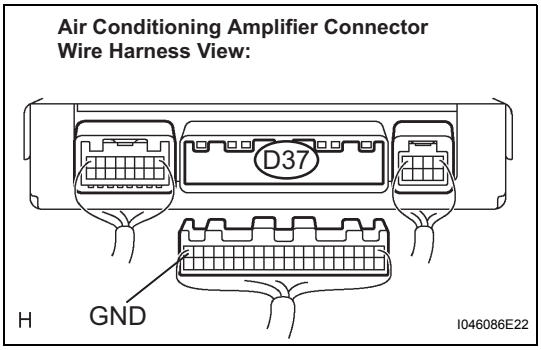

(a) Measure the resistance according to the value(s) in the table below.

Resistance

Tester connection (Symbols)	Condition	Specified condition
D37-20 (GND) - Body ground	Always	Below 1 Ω

NG → **REPAIR OR REPLACE HARNESS OR CONNECTOR**

OK

PROCEED TO NEXT CIRCUIT INSPECTION SHOWN IN PROBLEM SYMPTOMS TABLE

Back-up Power Source Circuit

DESCRIPTION

This is back-up power source circuit for the A/C amplifier. Power is supplied even when turning the ignition switch off and is used for diagnostic trouble code memory, etc.

WIRING DIAGRAM

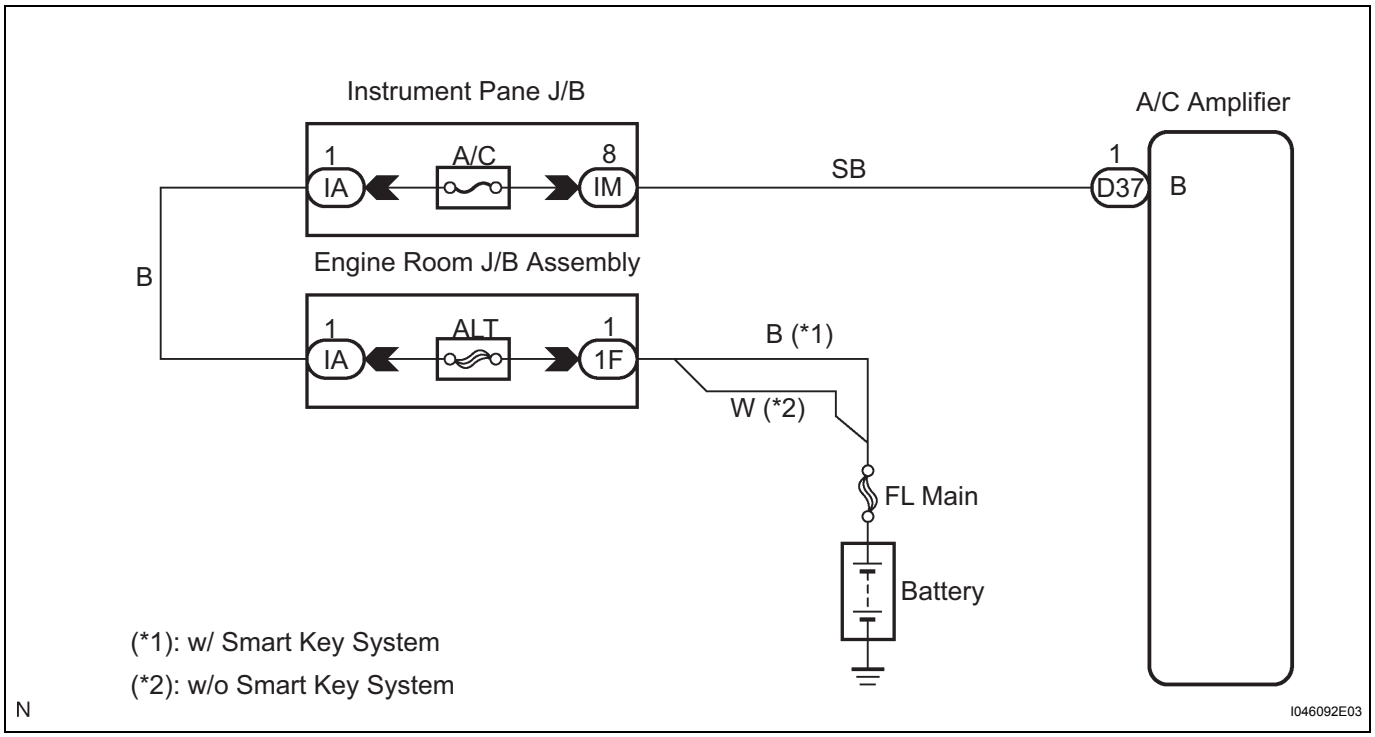

INSPECTION PROCEDURE

1 **INSPECT FUSE (A/C)**

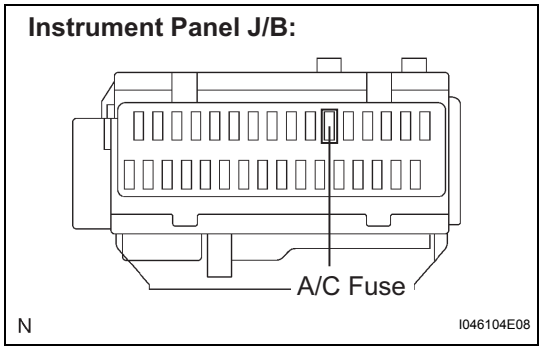

(a) Remove the A/C fuse from the instrument panel J/B.
(b) Measure the resistance according to the value(s) in the table blow.

Resistance

Tester item	Condition	Specified condition
A/C fuse	Always	Below 1 Ω

NG → **REPLACE FUSE (A/C)**

OK

2	CHECK HARNESS AND CONNECTOR (+B - BODY GROUND)

Air Conditioning Amplifier Connector Wire Harness View:

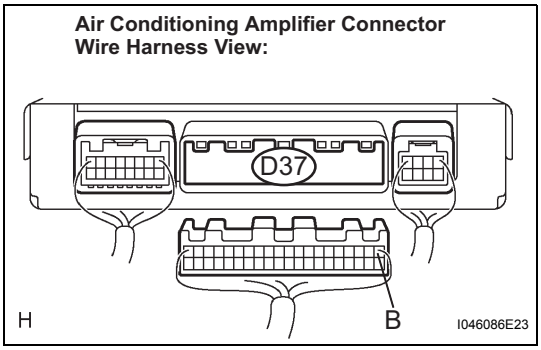

(a) Remove the A/C amplifier and disconnect the connector.
(b) Measure the voltage according to the value(s) in the table blow.

Voltage

Tester connection (Symbols)	Condition	Specified condition
D37-1 (B) - Body ground	Always	10 to14 V

NG → **REPAIR OR REPLACE HARNESS OR CONNECTOR**

OK

PROCEED TO NEXT CIRCUIT INSPECTION SHOWN IN PROBLEM SYMPTOMS TABLE

LIN Communication Circuit

DESCRIPTION

The heater control panel switch operation signal to the A/C amplifier.

WIRING DIAGRAM

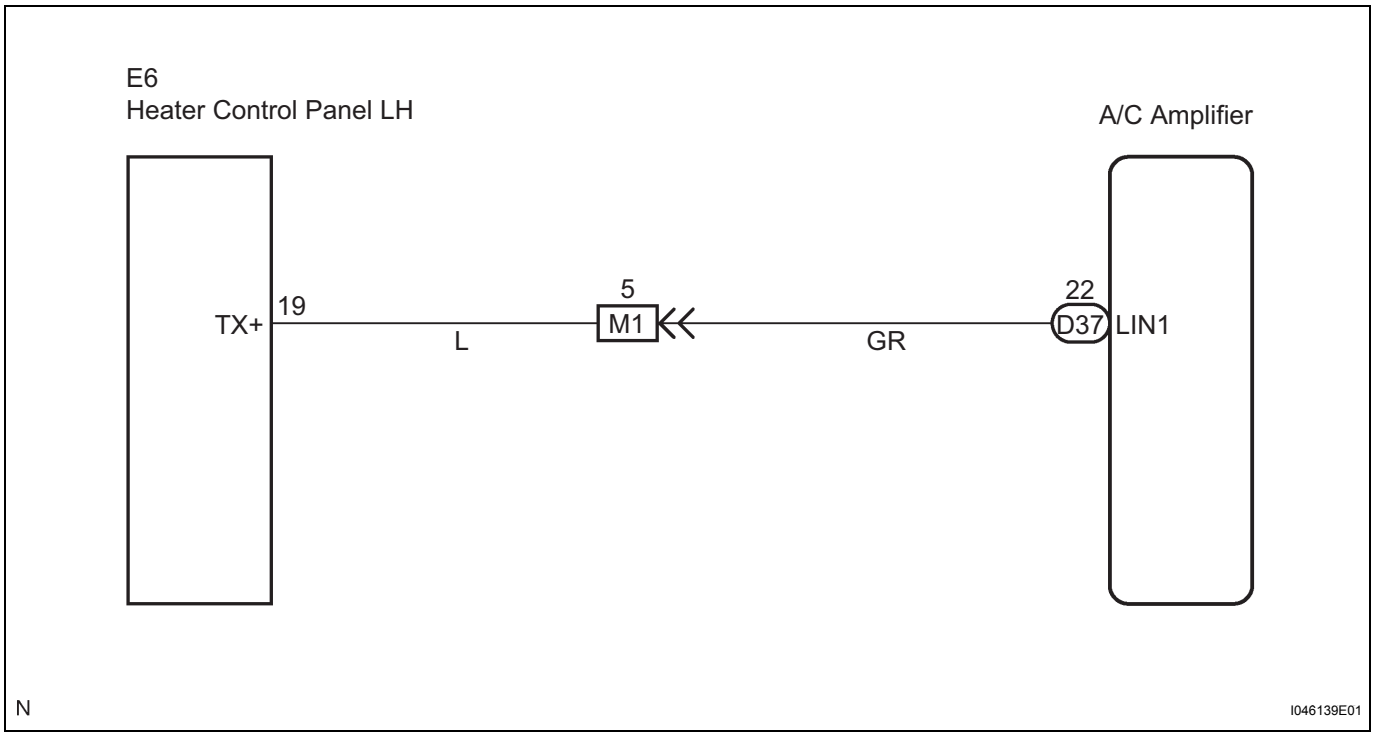

INSPECTION PROCEDURE

1	CHECK HARNESS AND CONNECTOR (AIR CONDITIONING AMPLIFIER - HEATER CONTROL PANEL LH)

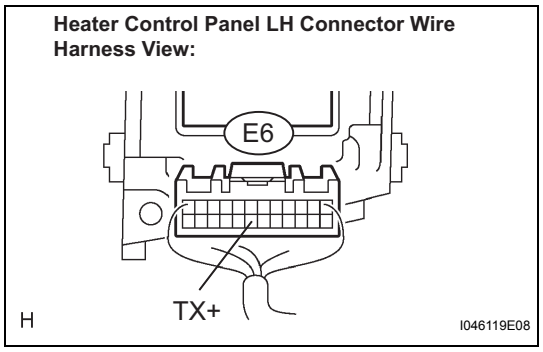

(a) Disconnect the connector from heater control panel LH.

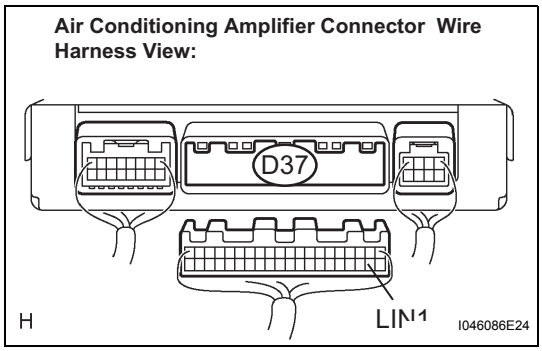

(b) Disconnect the connector from the A/C amplifier.
(c) Measure the resistance according to the value(s) in the table below.

Resistance

Tester connection (Symbols)	Condition	Specified condition
D37-22 (LIN1) - E6-19 (TX+)	Always	Below 1 Ω
D37-22 (LIN1) - E6-19 (TX+)	Always	10 kΩ or higher

NG → **REPAIR OR REPLACE HARNESS OR CONNECTOR**

OK

PROCEED TO NEXT CIRCUIT INSPECTION SHOWN IN PROBLEM SYMPTOMS TABLE

REPLACEMENT

1. DISCHARGE REFRIGERANT FROM REFRIGERATION SYSTEM

(a) Start up the engine.
(b) Turn the A/C switch on.
(c) Operate the cooler compressor at an engine rpm of approximately 1,000 for 5 to 6 minutes to circulate the refrigerant and collect compressor oil remaining in each component into the cooler compressor as much as possible.
(d) Stop the engine.
(e) Using SST, let the refrigerant gas out.
SST 07110-58060 (07117-58080, 07117-58090, 07117-78050, 07117-88060, 07117-88070, 07117-88080)

2. CHARGE REFRIGERANT

(a) Perform vacuum purging using a vacuum pump.
(b) Charge refrigerant HFC-134a (R134a)
Specified amount:
450 to 550 g (15.9 to 19.4oz.)
SST 07110-58060 (07117-58060, 07117-58070, 07117-58080, 07117-58090, 07117-78050, 07117-88060, 07117-88070, 07117-88080)
NOTICE:
Do not operate the cooler compressor before charging refrigerant as the cooler compressor does not work properly without any refrigerant, which causes the compressor to overheat.
HINT:
Prepare a service can to recharge refrigerant if using the refrigerant gas collected with the freon collection / recycling device because the collective rate of the device is approximately 90%.

3. WARM UP ENGINE

(a) Warm up the engine at less than 1,850 rpm for 2 minutes or more after charging refrigerant.
NOTICE:
Be sure to warm up the compressor before turning the A/C switch on after removing and installing the cooler refrigerant lines (including the compressor), to prevent damage to the compressor.

4. CHECK FOR LEAKAGE OF REFRIGERANT

(a) After recharging refrigerant gas, check for leakage of refrigerant gas using a halogen leak detector.
(b) Carry out under the following conditions:
- Stop the engine.
- Secure good ventilation (the gas leak detector may react to volatile gases which are not refrigerant, such as evaporated gasoline and exhaust gas).
- Repeat the test 2 or 3 times.

- Make sure that there is some refrigerant remaining in the refrigeration system.
  When the compressor is off: approx. 392 to 588 kPa (4 to 6 kgf/cm^2, 57 to 85 psi)

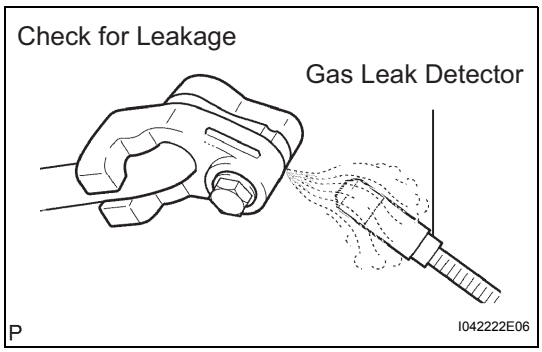

(c) Using a gas leak detector, check for leakage of the refrigerant line.

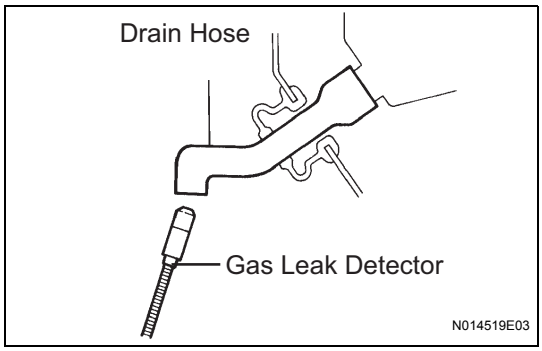

(d) Bring the gas leak detector close to the drain hose with the detector's power off.
HINT:
- After the blower motor has stopped, let the cooling unit stand for more than 15 minutes.
- Bring the gas leak detector sensor under the drain hose.
- When bringing the gas leak detector close to the drain hose, make sure that the gas leak detector does not react to volatile gases.

If such reaction is unavoidable, the vehicle must be lifted up.

(e) If a gas leak is not detected on the drain hose, remove the blower motor control from the cooling unit. Insert the gas leak detector sensor into the unit and perform the test.

(f) Disconnect the pressure switch connector and leave it for approximately 20 minutes. Bring the gas leak detector close to the pressure switch and perform the test.

REMOVAL

HINT:
- Installation is in the reverse order of removal.
- COMPONENTS for instrument panel safety pad sub-assembly: See page IP-2.

1. **DISCONNECT BATTERY NEGATIVE TERMINAL**
   (a) Wait for 90 seconds after disconnecting the cable to prevent the airbag working.
2. **REMOVE WINDSHIELD WIPER ARM AND BLADE ASSEMBLY LH (See page WW-38)**
3. **REMOVE WINDSHIELD WIPER ARM AND BLADE ASSEMBLY RH (See page WW-38)**
4. **REMOVE COWL TOP VENTILATOR LOUVER RH (See page WW-38)**
5. **REMOVE WINDSHIELD WIPER MOTOR AND LINK (See page WW-38)**
6. **REMOVE COWL TOP OUTSIDE PANEL FRONT**
   (a) Remove the 4 bolts, 2 nuts and cowl top outside panel front.
7. **DISCHARGE REFRIGERANT FROM REFRIGERATION SYSTEM (See page AC-138)**

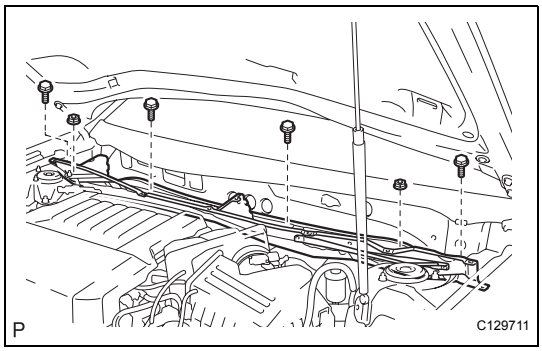

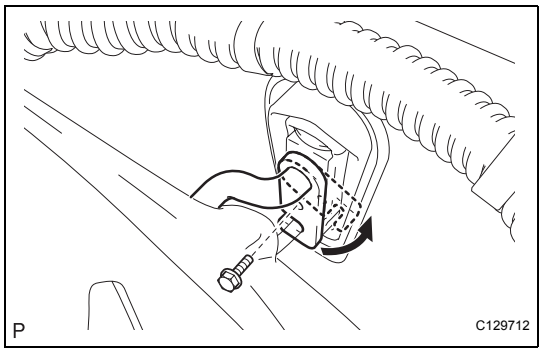

8. **DISCONNECT SUCTION HOSE SUB-ASSEMBLY**
   (a) Remove the bolt, and slide the hook connector.
   (b) Disconnect the suction hose sub-assembly.
   (c) Remove the O-ring from the suction hose sub-assembly.
   NOTICE:
   Seal the openings of the disconnected parts using vinyl tape to prevent moisture and foreign matter from entering.
9. **DISCONNECT AIR CONDITIONER TUBE AND ACCESSORY**
   (a) Disconnect the air conditioner tube & accessory.
   (b) Remove the O-ring from the air conditioner tube & accessory.
   NOTICE:
   Seal the openings of the disconnected parts using vinyl tape to prevent moisture and foreign matter from entering.

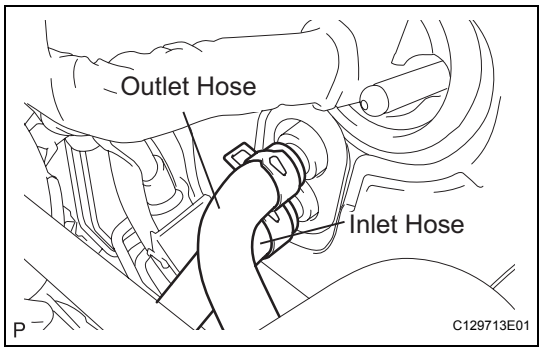

10. DISCONNECT HEATER WATER OUTLET HOSE A(FROM HEATER UNIT)

(a) Slide the clip and disconnect the heater water outlet hose A.

NOTICE:

- **Do not apply excessive force to the heater water outlet hose A.**
- **Prepare a drain pan or cloth in case the cooling water leaks.**

11. DISCONNECT HEATER WATER INLET HOSE A

(a) Slide the clip and disconnect the heater water inlet hose A.

NOTICE:

- **Do not apply excessive force to the heater water inlet hose A.**
- **Prepare a drain pan or cloth in case the cooling water leaks.**

12. REMOVE INSTRUMENT PANEL SAFETY PAD SUB-ASSEMBLY

IP-8

HINT:

Refer to the removal procedures for the instrument panel safety pad sub-assembly w/ front passenger airbag assembly.

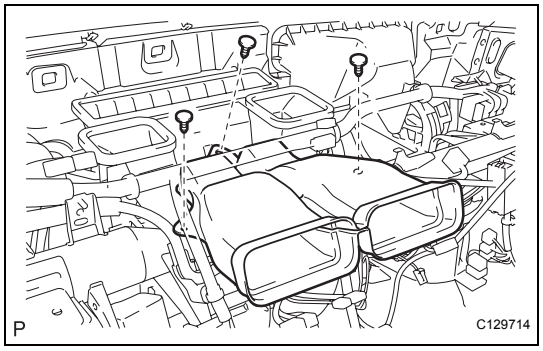

13. REMOVE HEATER TO REGISTER DUCT NO.2

(a) Remove the 3 clips and heater to register duct No.2.

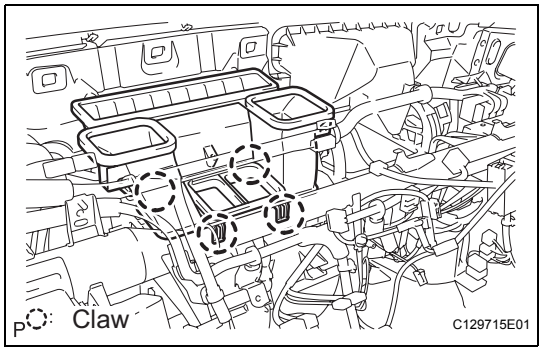

14. REMOVE HEATER TO REGISTER DUCT ASSEMBLY NO.6

(a) Disengage the 4 claws and then remove the heater to register duct No.6.

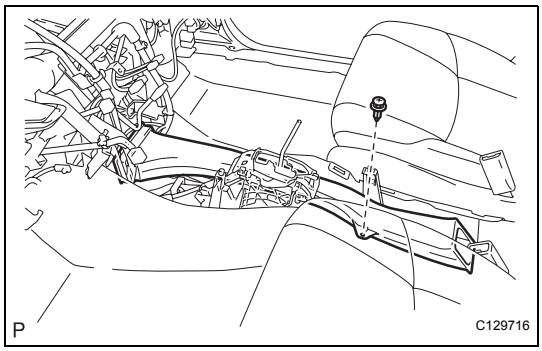

15. REMOVE CONSOLE BOX DUCT NO.1

(a) Remove the clip and console box duct No.1.

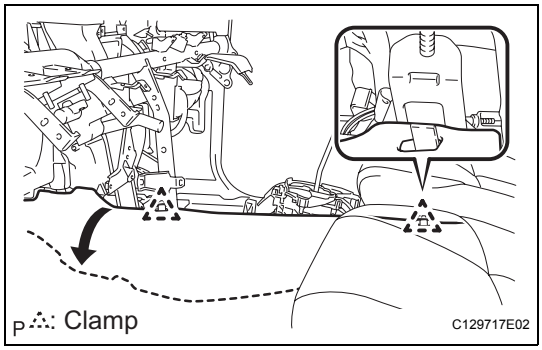

16. REMOVE FLOOR CARPET BRACKET LH

(a) Release the 2 clamps.

(b) Turn back the floor carpet.

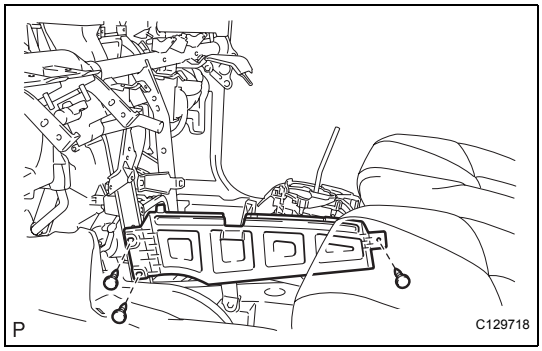

(c) Remove the 3 clips.

(d) Remove the floor carpet bracket LH.

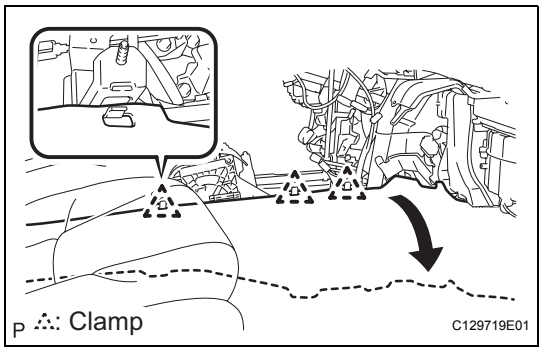

17. REMOVE FLOOR CARPET BRACKET RH

(a) Release the 3 clamps.

(b) Turn back the floor carpet.

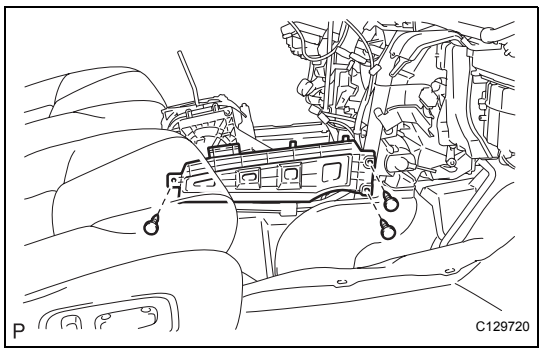

(c) Remove the 3 clips.

(d) Remove the floor carpet bracket RH.

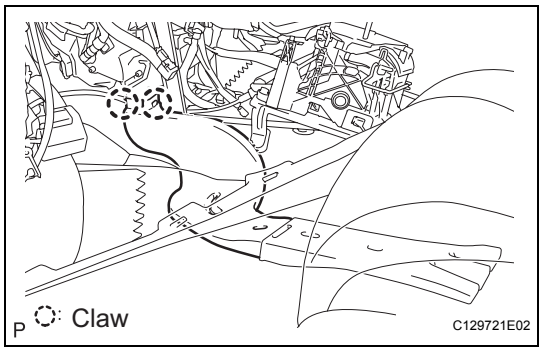

18. **REMOVE AIR DUCT REAR NO.2**
    (a) Release the 2 claws and remove the air duct rear No.2.

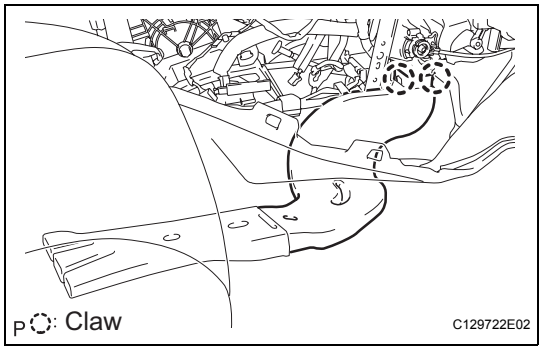

19. **REMOVE AIR DUCT REAR NO.1**
    (a) Release the 2 claws and remove the air duct rear No.1.
20. **REMOVE AIR DUCT SUB-ASSEMBLY NO.1 (See page SR-37)**
21. **SEPARATE STEERING INTERMEDIATE SHAFT ASSEMBLY (See page SR-37)**
22. **REMOVE STEERING COLUMN ASSEMBLY (See page SR-37)**
23. **REMOVE INSTRUMENT PANEL REINFORCEMENT ASSEMBLY**
    (a) Disconnect each connector and remove each clamp. Disconnect the wire harness.
    (b) Remove the 6 nuts and 3 bolts.

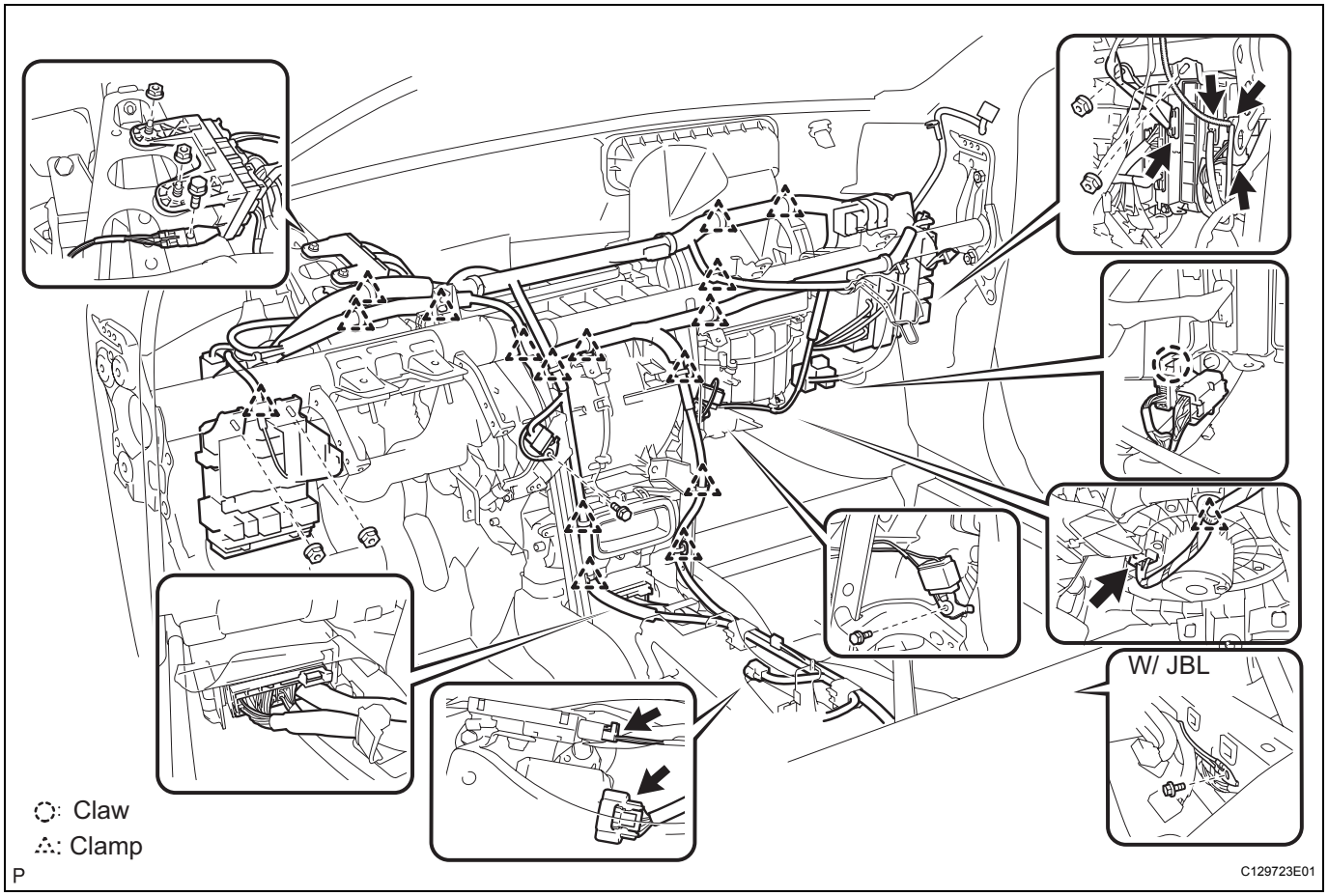

AC

(c) Remove the 3 bolts and nut.
(d) Using a "Torx" socket wrench (T40), remove the 5 "Torx" bolts.
HINT:
The "Torx" bolts on the passenger side can be removed with the collar or for adjustment.
(e) Using a hexagon wrench 12 mm, remove the 2 collars and instrument panel reinforcement assembly with the air conditioner unit assembly.

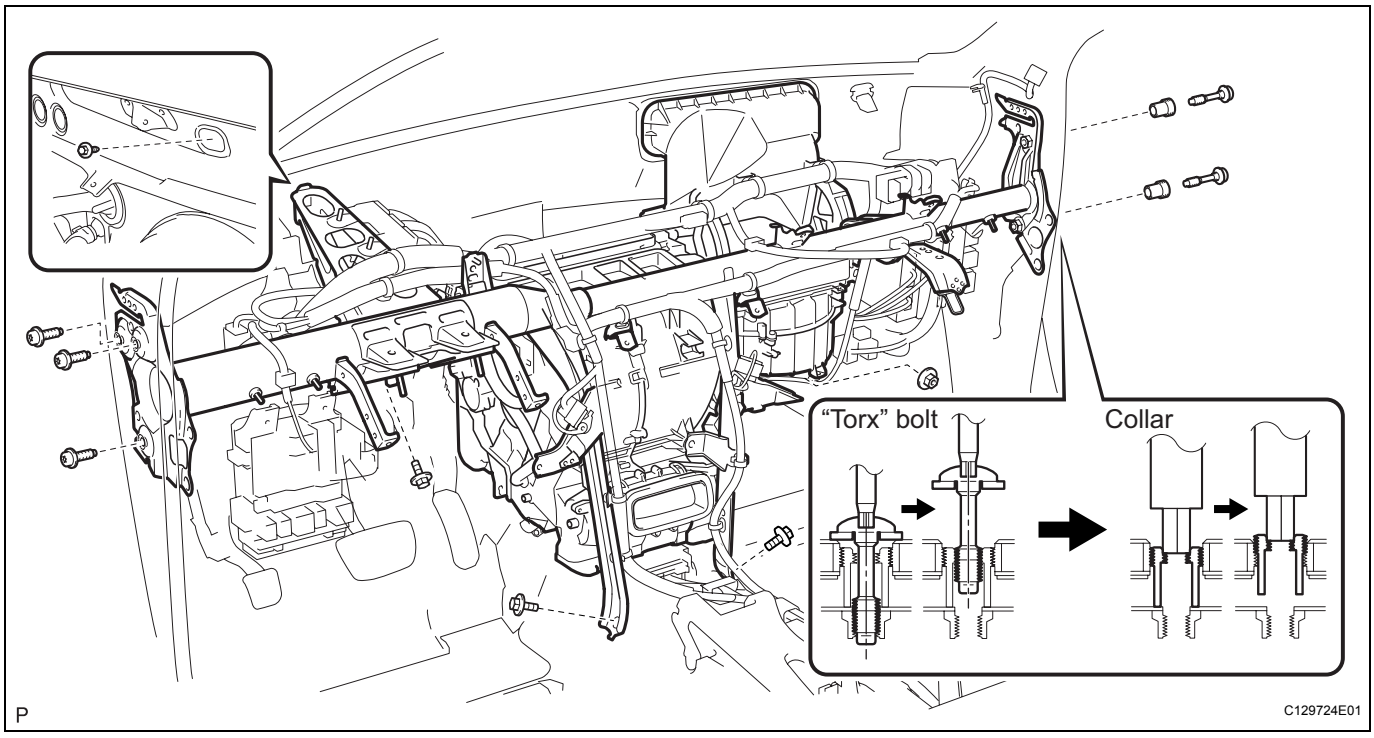

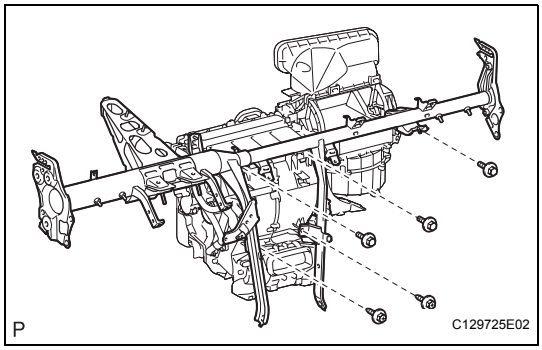

(f) Remove the 3 bolts, 2 screws and instrument panel reinforcement assembly.

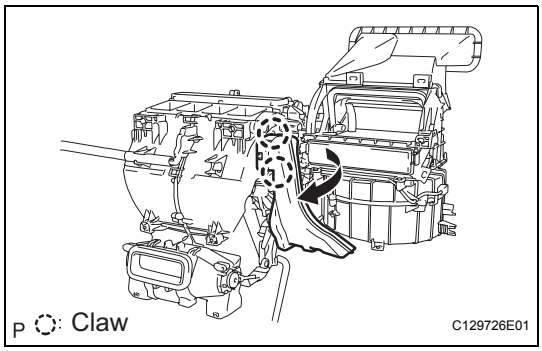

DISASSEMBLY

1. REMOVE AIR DUCT SUB-ASSEMBLY NO.2

(a) Release the 2 claws and remove the air duct sub-assembly No.2 as shown in the illustration.

2. REMOVE BLOWER ASSEMBLY (See page AC-157)

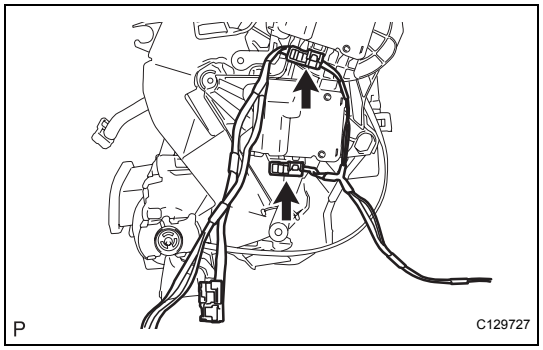

3. REMOVE AIR OUTLET CONTROL SERVO MOTOR

(a) Disconnect the 2 connectors and remove the air conditioner harness.

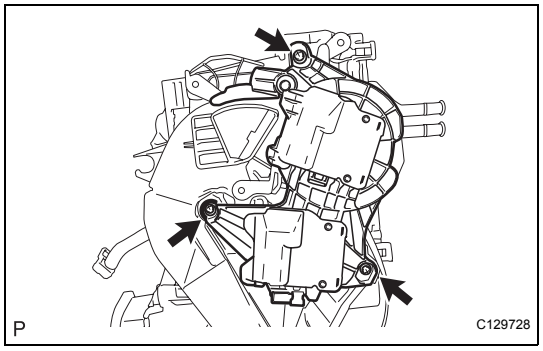

(b) Remove the 3 screws and then the air outlet control servo motor.

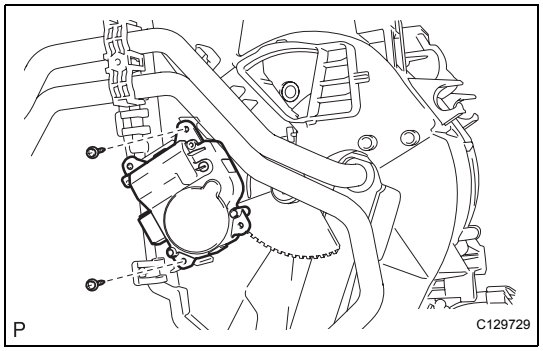

4. REMOVE AIR MIX CONTROL SERVO MOTOR

(a) Remove the 2 screws and air mix control servo motor.

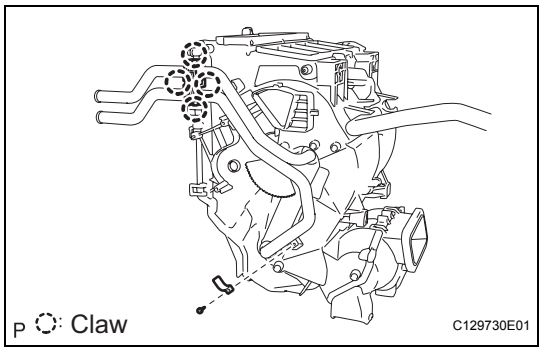

5. REMOVE HEATER RADIATOR UNIT SUB-ASSEMBLY

(a) Remove the screw and clamp.

(b) Release the 4 claws and remove the clamp.

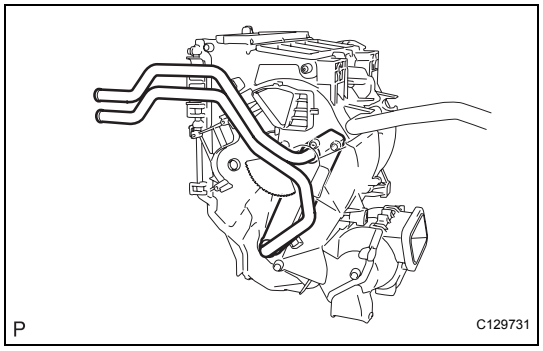

(c) Remove the heater radiator unit sub-assembly from the air conditioning radiator assembly.

NOTICE:

Prepare a drain pan or cloth in case the cooling water leaks.

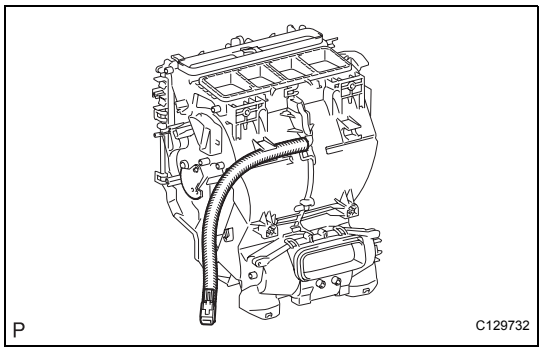

6. REMOVE COOLER AIR HOSE

(a) Remove the cooler air hose with the cooler (room temp. sensor) thermistor.

(b) Remove the cooler air hose with the cooler (room temp. sensor) thermistor.

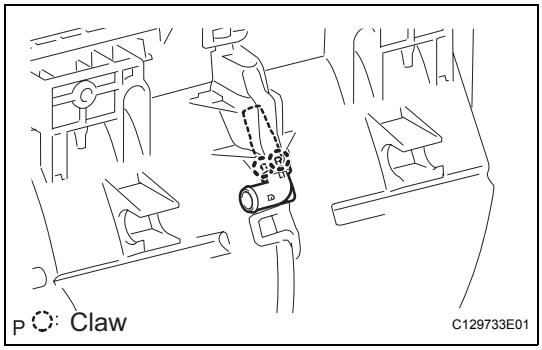

7. REMOVE ASPIRATOR

(a) Disengage the 2 claws and then remove the aspirator.

REASSEMBLY

1. **INSTALL ASPIRATOR**
2. **INSTALL COOLER AIR HOSE**
3. **INSTALL HEATER RADIATOR UNIT SUB-ASSEMBLY**
4. **INSTALL AIR MIX CONTROL SERVO MOTOR**
5. **INSTALL AIR OUTLET CONTROL SERVO MOTOR**
6. **INSTALL BLOWER ASSEMBLY**
7. **INSTALL AIR DUCT SUB-ASSEMBLY NO.2**

INSTALLATION

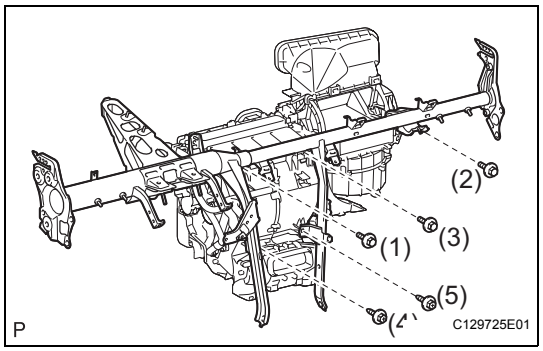

1. **INSTALL INSTRUMENT PANEL REINFORCEMENT ASSEMBLY**
   (a) Install the conditioner unit assembly to the instrument panel reinforcement assembly with the 2 screws and 3 bolts.
   Torque: Bolt
   9.8 N*m (100 kgf*cm, 87 in.*lbf)
   NOTICE:
   Tighten the bolts and screws in the order shown in the illustration to install the air conditioner unit assembly.
   (b) Driver seat:
      (1) Using a "Torx" socket wrench (T40), install the instrument panel reinforcement assembly with the 3 "Torx" bolts.
      Torque: 17 N*m (173 kgf*cm, 13 ft.*lbf)
   (c) Passenger seat:
      (1) Using a hexagon wrench 12 mm, install the instrument panel reinforcement assembly with the 2 bolts.
      Torque: 6.0 N*m (61 kgf*cm, 53 in.*lbf)
      (2) Using a "Torx" socket wrench (T40), install the instrument panel reinforcement assembly with the 2 "Torx" bolts.
      Torque: 20 N*m (204 kgf*cm, 15 in.*lbf)
   (d) Install the 3 bolts and nut.
   Torque: NUT
   9.8 N*m (100 kgf*cm, 87 in.*lbf)
   BOLT A
   20 N*m (204 kgf*cm, 15 ft.*lbf)

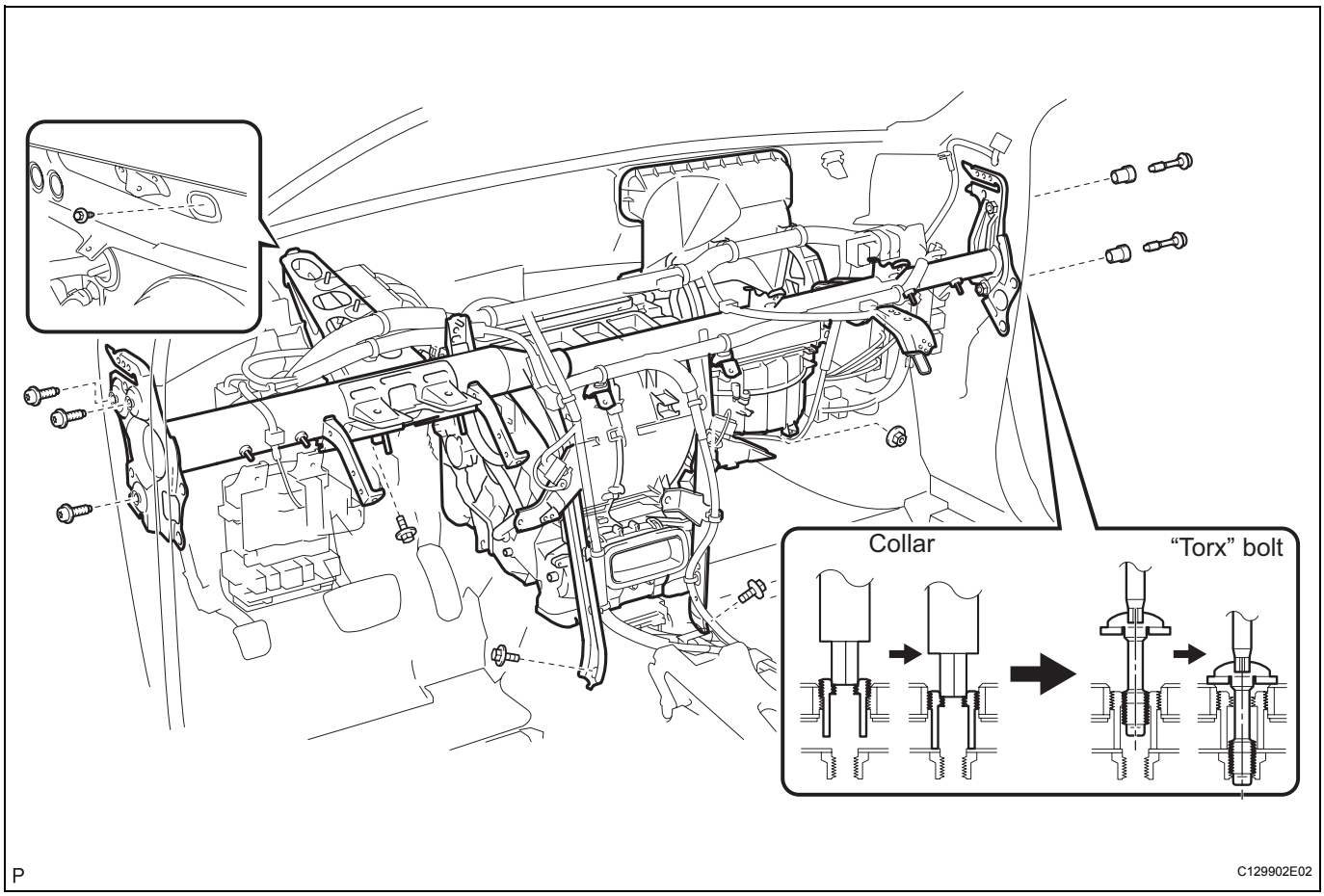

(e) Connect the connectors and clamps.

(f) Install the 6 nuts and 3 bolts.

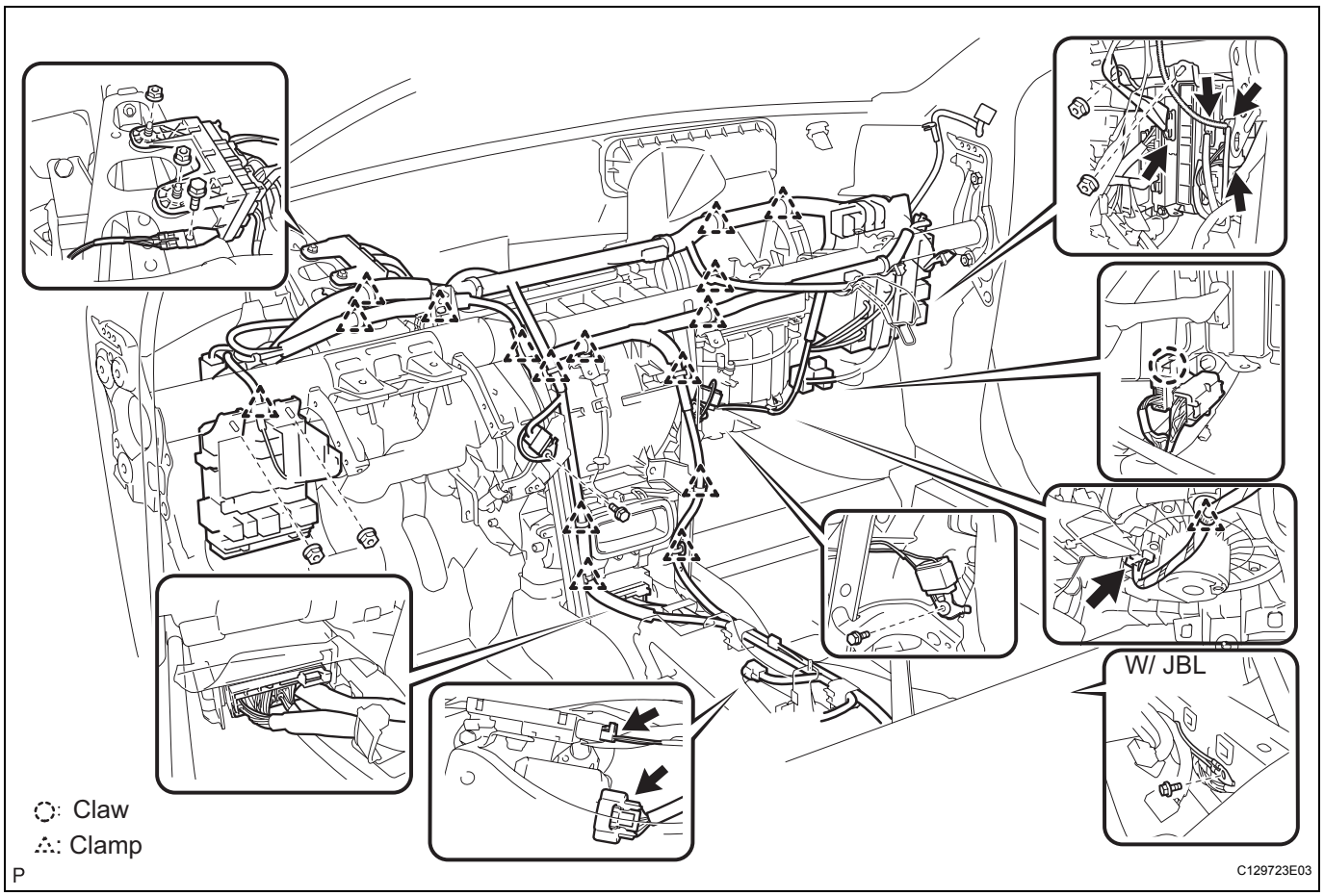

2. **CONNECT STEERING INTERMEDIATE SHAFT ASSEMBLY (See page SR-45)**

3. **INSTALL STEERING COLUMN ASSEMBLY (See page SR-45)**

4. **INSTALL INSTRUMENT PANEL SAFETY PAD SUB-ASSEMBLY (See page IP-17)**

5. **INSTALL AIR CONDITIONER TUBE AND ACCESSORY**
   (a) Remove the attached vinyl tape from the tube.
   (b) Sufficiently apply compressor oil to a new O-ring and fitting surface of the air conditioning tube assembly.
   Compressor oil:
   ND-OIL 8 or equivalent
   (c) Install the O-ring on the liquid tube sub-assembly.
   (d) Install the liquid tube sub-assembly.

6. **INSTALL SUCTION HOSE SUB-ASSEMBLY**
   (a) Remove the attached vinyl tape from hose.
   (b) Sufficiently apply compressor oil to a new O-ring and the fitting surface of the suction hose sub-assembly.
   Compressor oil:
   ND-OIL 8 or equivalent
   (c) Install the O-ring on the suction hose sub-assembly.

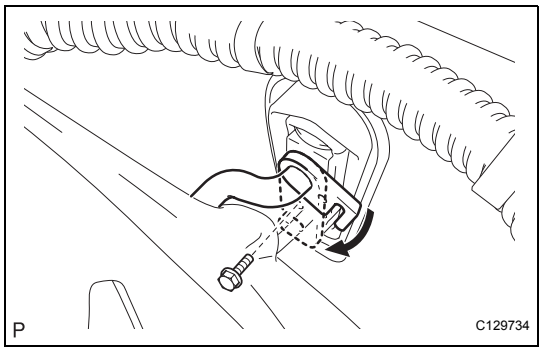

(d) Move the hook connector in the direction indicated by the arrow in the illustration.
(e) Insert the pipe joint into the fitting hole securely and tighten the bolt.
Torque: 9.8 N*m (100 kgf*cm, 87 in.*lbf)

7. **CONNECT BATTERY NEGATIVE TERMINAL**

8. **PERFORM SYSTEM INITIALIZE**
(a) Some system need initialization when disconnecting the cable from the negative battery terminal.
HINT:
See page IN-29

9. **ADD ENGINE COOLANT (See page CO-7)**

10. **CHECK FOR ENGINE COOLANT LEAKS (See page CO-8)**

11. **CHARGE REFRIGERANT (See page AC-138)**

12. **WARM UP ENGINE (See page AC-139)**

13. **CHECK FOR LEAKAGE OF REFRIGERANT (See page AC-139)**

14. **INSTALL WINDSHIELD WIPER MOTOR AND LINK (See page WW-40)**

15. **INSTALL WINDSHIELD WIPER ARM AND BLADE ASSEMBLY RH (See page WW-40)**

16. **INSTALL WINDSHIELD WIPER ARM AND BLADE ASSEMBLY LH (See page WW-41)**

REMOVAL

HINT:
- Installation is in the reverse order of removal.
- COMPONENTS for instrument panel safety pad sub-assembly: See page IP-2.

1. **DISCONNECT BATTERY NEGATIVE TERMINAL**
   (a) Wait for 90 seconds after disconnecting the cable to prevent the airbag working.
2. **REMOVE WINDSHIELD WIPER ARM AND BLADE ASSEMBLY LH (See page WW-38)**
3. **REMOVE WINDSHIELD WIPER ARM AND BLADE ASSEMBLY RH (See page WW-38)**
4. **REMOVE COWL TOP VENTILATOR LOUVER RH (See page WW-38)**
5. **REMOVE WINDSHIELD WIPER MOTOR AND LINK (See page WW-38)**
6. **REMOVE COWL VENTILATOR PANEL SUB-ASSEMBLY**
   HINT:
   See page AC-144
7. **DISCHARGE FROM REFRIGERATION SYSTEM (See page AC-138)**
8. **DISCONNECT SUCTION HOSE SUB-ASSEMBLY (See page AC-144)**
9. **DISCONNECT AIR CONDITIONER TUBE AND ACCESSORY (See page AC-144)**
10. **DISCONNECT HEATER WATER OUTLET HOSE A(FROM HEATER UNIT) (See page AC-145)**
11. **DISCONNECT HEATER WATER INLET HOSE A (See page AC-145)**
12. **REMOVE INSTRUMENT PANEL SAFETY PAD SUB-ASSEMBLY (See page IP-14)**
13. **REMOVE AIR DUCT SUB-ASSEMBLY NO.1 (See page SR-37)**
14. **SEPARATE STEERING INTERMEDIATE SHAFT ASSEMBLY (See page SR-37)**
15. **REMOVE STEERING COLUMN ASSEMBLY (See page SR-37)**
16. **REMOVE HEATER TO REGISTER DUCT NO.2 (See page AC-145)**
17. **REMOVE HEATER TO REGISTER DUCT ASSEMBLY NO.6 (See page AC-145)**
18. **REMOVE CONSOLE BOX DUCT NO.1 (See page AC-146)**

19. **REMOVE FLOOR CARPET BRACKET LH (See page AC-146)**

20. **REMOVE FLOOR CARPET BRACKET RH (See page AC-146)**

21. **REMOVE INSTRUMENT PANEL REINFORCEMENT ASSEMBLY (See page AC-147)**

22. **REMOVE AIR DUCT SUB-ASSEMBLY NO.2 (See page AC-148)**

23. **REMOVE BLOWER ASSEMBLY**

(a) Remove the connector and clamp, and disconnect the wire harness.

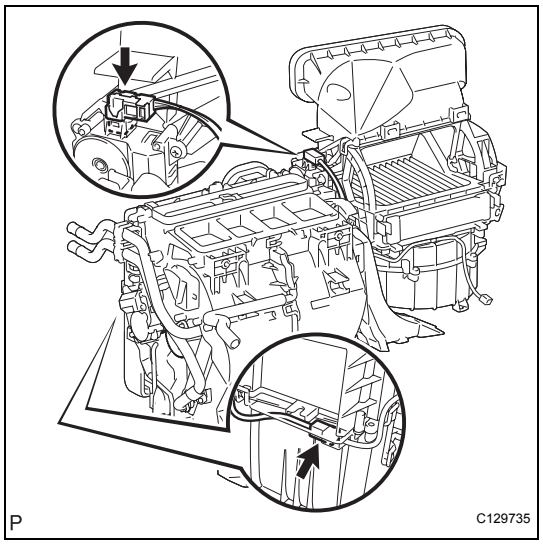

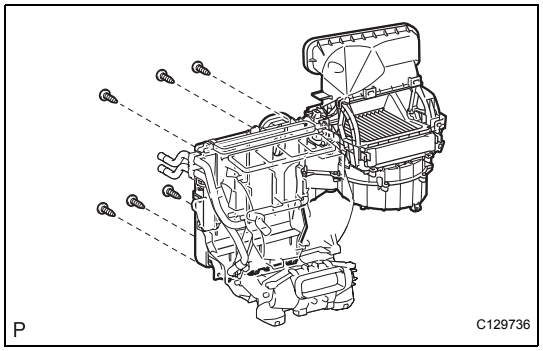

(b) Remove the 6 screws and then the blower assembly with the cooler evaporator sub-assembly.

DISASSEMBLY

1. **REMOVE EVAPORATOR TEMPERATURE SENSOR**

(a) Remove the clamp and evaporator temperature sensor.

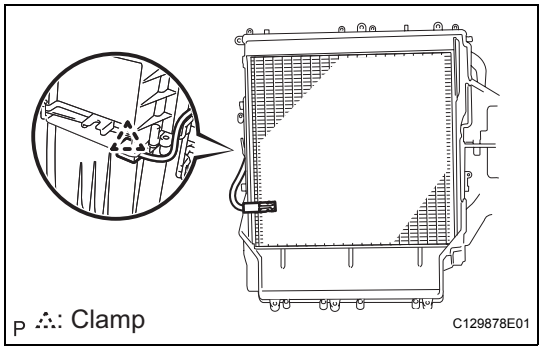

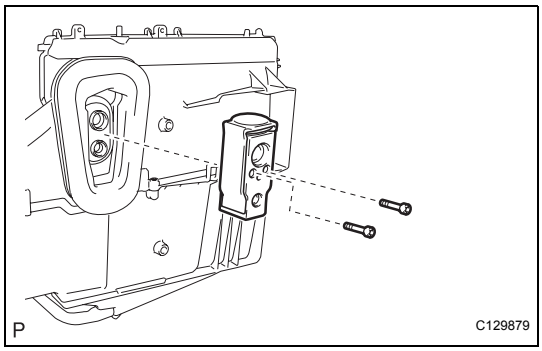

2. REMOVE COOLER EXPANSION VALVE

(a) Using a hexagon wrench 4 mm, remove the 2 hexagon bolts and cooler expansion valve.

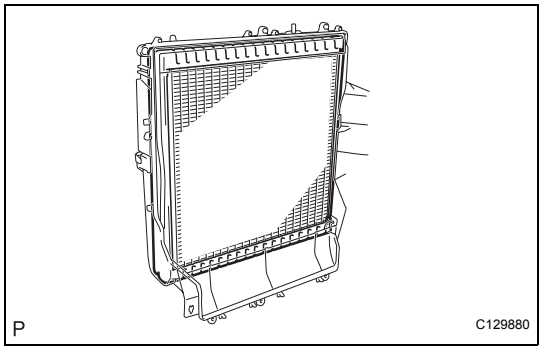

3. REMOVE COOLER EVAPORATOR SUB-ASSEMBLY NO.1

(a) Remove the cooler evaporator sub-assembly No.1.

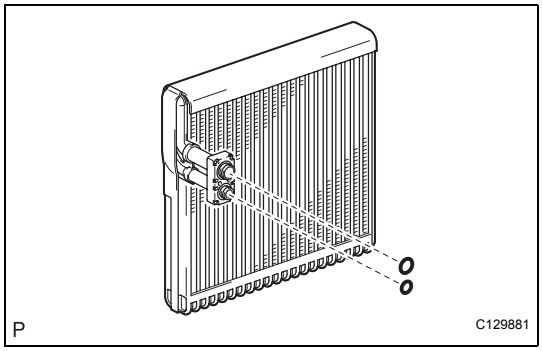

(b) Remove the 2 O-rings from the cooler evaporator sub-assembly No.1.

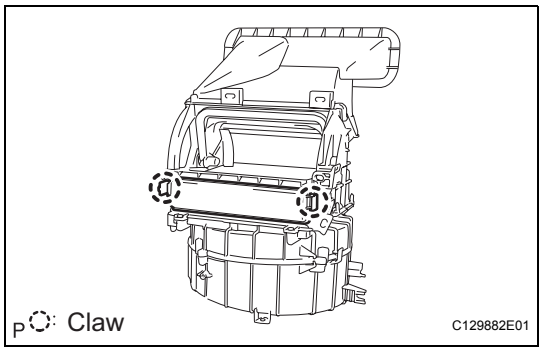

4. REMOVE AIR FILTER COVER PLATE

(a) Release the 2 claws and remove the air filter cover plate.

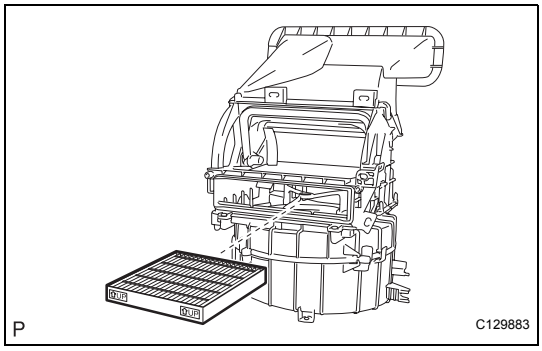

5. REMOVE CLEAN AIR FILTER

(a) Remove the clean air filter.

PROBLEM SYMPTOMS TABLE

If a normal system code is displayed during the DTC check but the problem still occurs, check the circuits for each problem symptom in the order given in the table below and proceed to the relevant troubleshooting page.
HINT:
Inspect the "Fuse" and "Relay" before confirming the suspected area as shown in the charts below.
Inspect each malfunction circuit in numerical order for the corresponding symptom.
If any malfunction still exists even after checking and confirming that all the circuits are normal, replace the ECU.

AIR CONDITIONING SYSTEM

Symptom	Suspected area	See page
Whole functions of the A/C system does not operate	1. IG power source circuit	AC-127
	2. Heater control panel power source circuit	AC-103
	3. Heater control switch circuit	AC-105
	4. LIN communication circuit	AC-132
	5. Heater control panel LH	AC-182
	6. A/C amplifier	-
Air Flow Control : No blower operation	1. IG power source circuit	AC-127
	2. Blower motor circuit	AC-94
	3. Heater control panel power source circuit	AC-103
	4. Heater control switch circuit	AC-105
	5. LIN communication circuit	AC-132
	6. Heater control panel LH	AC-182
	7. A/C amplifier	-
Air Flow Control : No blower control	1. Blower motor circuit	AC-94
	2. Room temperature sensor circuit	AC-46
	3. Ambient temperature sensor circuit	AC-50
	4. Solar sensor circuit (Driver side)	AC-70
	5. Solar sensor circuit (Passenger side)	AC-58
	6. A/C amplifier	-
Air Flow Control : Insufficient air flow	Blower motor circuit	AC-94
Temperature Control : No cool air comes out	1. Blower motor circuit	AC-94
	2. Air mix control servo motor circuit (Driver side)	AC-80
	3. Air mix control servo motor circuit (Passenger side)	AC-74
	4. Room temperature sensor circuit	AC-46
	5. Ambient temperature sensor circuit	AC-50
	6. Evaporator temperature sensor circuit	AC-55
	7. Pressure switch circuit	AC-66
	8. Compressor circuit	AC-100
	9. Compressor lock sensor circuit	AC-62
	10. Compressor solenoid circuit	AC-82
	11. A/C amplifier	-

Symptom	Suspected area	See page
Temperature Control : No Warm air comes out	1. Steering pad switch circuit	AC-123
	2. Air mix control servo motor circuit (Driver side)	AC-80
	3. Air mix control servo motor circuit (Passenger side)	AC-74
	4. Room temperature sensor circuit	AC-46
	5. Ambient temperature sensor circuit	AC-50
	6. Evaporator temperature sensor circuit	AC-55
	7. Solar sensor circuit (Driver side)	AC-70
	8. Solar sensor circuit (Passenger side)	AC-58
	9. A/C amplifier	-
Temperature Control : Output is warmer or cooler than the set temperature or response is slow	1. Steering pad switch circuit	AC-123
	2. Air mix control servo motor circuit (Driver side)	AC-80
	3. Air mix control servo motor circuit (Passenger side)	AC-74
	4. Room temperature sensor circuit	AC-46
	5. Ambient temperature sensor circuit	AC-50
	6. Evaporator temperature sensor circuit	AC-55
	7. Solar sensor circuit (Driver side)	AC-70
	8. Solar sensor circuit (Passenger side)	AC-58
	9. A/C amplifier	-
Temperature Control : No temperature control (only Max. cool or Max. warm)	1. Steering pad switch circuit	AC-123
	2. Air mix control servo motor circuit (Driver side)	AC-80
	3. Air mix control servo motor circuit (Passenger side)	AC-74
	4. Room temperature sensor circuit	AC-46
	5. Ambient temperature sensor circuit	AC-50
	6. Evaporator temperature sensor circuit	AC-55
	7. Solar sensor circuit (Driver side)	AC-70
	8. Solar sensor circuit (Passenger side)	AC-58
	9. A/C amplifier	-
No air inlet control	1. Air inlet control servo motor circuit	AC-76
	2. A/C amplifier	-
No air flow mode control	1. Air outlet control servo motor circuit	AC-78
	2. A/C amplifier	-
Blinking of A/C indicator	Compressor solenoid circuit	AC-82
Diagnostic trouble code are not recorded. Set mode is cleared when ignition switch is turned OFF.	Back up power source circuit	AC-130
Engine idle up dose not occur, or is continuous	1. Compressor circuit	AC-100
	2. Compressor lock sensor circuit	AC-62
	3. Compressor solenoid circuit	AC-82
	4. A/C amplifier	-
Set temperature value displayed does not much up with operation of temperature control switch.	1. Heater control panel power source circuit	AC-103
	2. Heater control switch circuit	AC-105
	3. LIN communication circuit	AC-132
	4. Heater control panel LH	AC-182
	5. A/C amplifier	-
The seat heater switch indicator does not come on.	1. Seat heater control power source circuit	AC-114
	2. Seat heater indicator circuit	AC-120
	3. Seat heater control sub-assembly	SE-59
	4. A/C amplifier	-
Unable to access the diagnosis mode.	A/C amplifier	-

Symptom	Suspected area	See page
Unable to control A/C with the steering pad switch	1. Steering pad switch circuit	AC-123
	2. Heater control panel power source circuit	AC-103
	3. LIN communication circuit	AC-132
	4. Heater control panel LH	AC-182
	5. A/C amplifier	-
DTC not recorded. Set mode is cleared when IG switch is turned off.	1.Back up power source circuit	AC-130
	2. A/C amplifier	-
Seat heater does not operate.	1. Seat heater switch circuit	AC-116
	2. Seat heater control power source circuit	AC-114
	3. Seat heater temperature sensor circuit (Driver side)	AC-85
	4. Seat heater temperature sensor circuit (Passenger side)	AC-88
	5. Seat heater control sub-assembly	SE-59
	6. A/C amplifier	-
Seat ventilators do not operate.	1. Seat heater switch circuit	AC-116
	2. Seat heater control power source circuit	AC-114
	3. Seat blower control circuit	AC-108
	4. Seat heater control sub-assembly	SE-59
	5. Seat climate control blower	SE-51

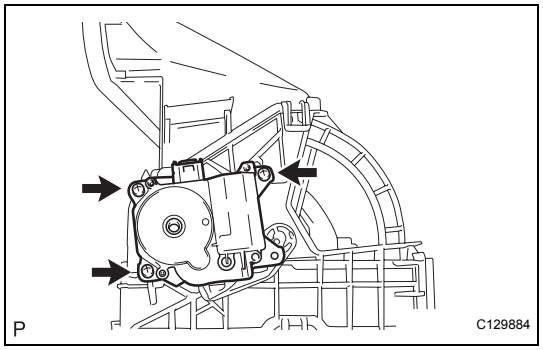

6. REMOVE AIR INLET SERVO MOTOR

(a) Remove the 3 screws and air inlet servo motor.

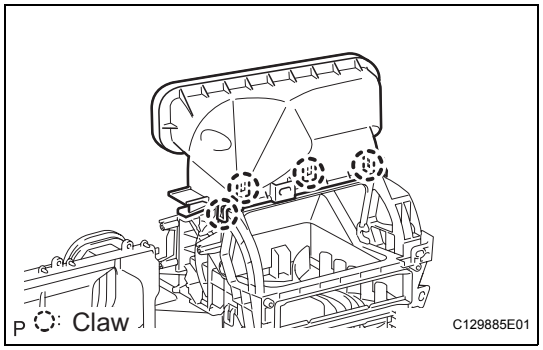

7. REMOVE AIR DUCT SUB-ASSEMBLY NO.3

(a) Disengage the 4 claws and then remove the air duct sub-assembly No.3.

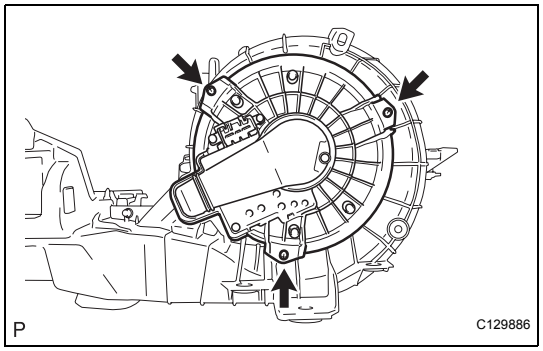

8. REMOVE COOLING UNIT MOTOR SUB-ASSEMBLY

(a) Remove the 3 screws and cooling unit motor sub-assembly w/ fan.

REASSEMBLY

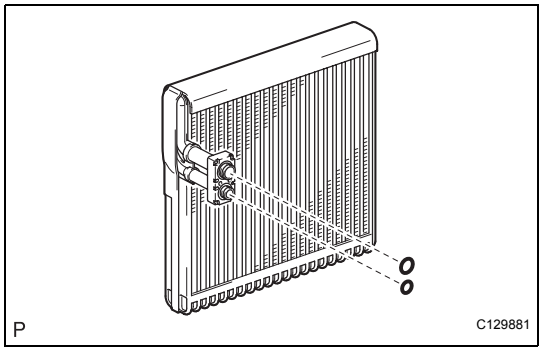

1. INSTALL COOLER EVAPORATOR SUB-ASSEMBLY NO.1

(a) sufficiently apply compressor oil (ND-OIL 8) to 2 new O-rings and the fitting surface. Install the 2 O-rings to the cooler evaporator No.1.

Compressor oil :
ND-OIL 8 or equivalent

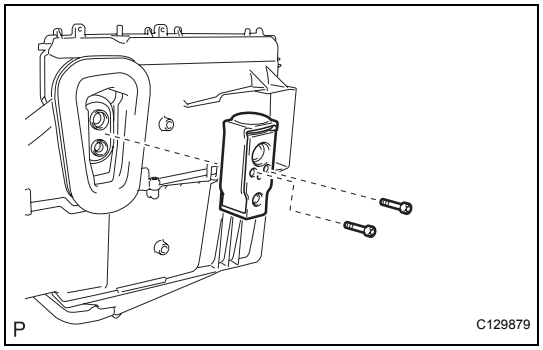

2. INSTALL COOLER EXPANSION VALVE

(a) Using a hexagon wrench 4 mm, install the cooler expansion valve with the 2 hexagon bolts.

Torque: 3.5 N*m (35 kgf*cm, 30 in.*lbf)

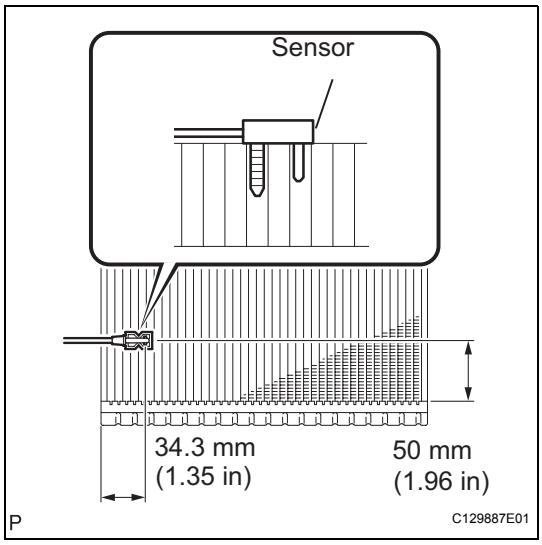

3. **INSTALL EVAPORATOR TEMPERATURE SENSOR**
   (a) If using a mew evaporator:
   Install the sensor to the evaporator as shown in the illustration.

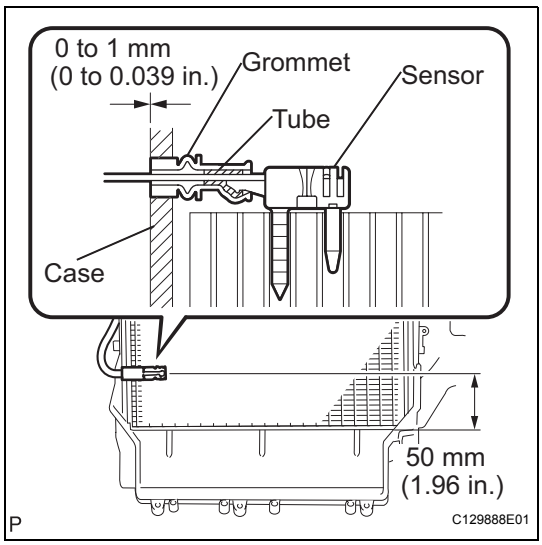

   (b) If reusing the evaporator:
      (1) Install the sensor to the evaporator as shown in the illustration.
      HINT:
      Completely cover the tube with the grommet.

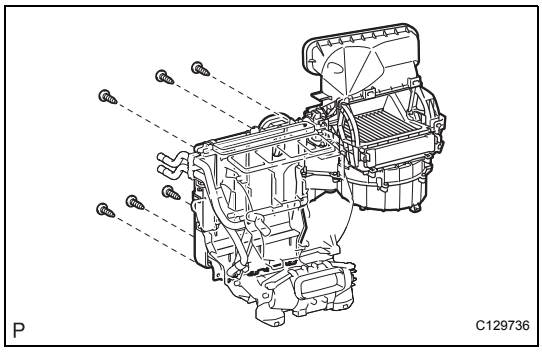

INSTALLATION

1. **INSTALL BLOWER ASSEMBLY**
   (a) Install the blower assembly with the 6 screws.
2. **INSTALL INSTRUMENT PANEL REINFORCEMENT ASSEMBLY (See page AC-150)**
3. **CONNECT STEERING INTERMEDIATE SHAFT ASSEMBLY (See page SR-45)**
4. **INSTALL STEERING COLUMN ASSEMBLY (See page SR-45)**
5. **INSTALL INSTRUMENT PANEL SAFETY PAD SUB-ASSEMBLY (See page IP-17)**
6. **INSTALL AIR CONDITIONER TUBE AND ACCESSORY (See page AC-152)**
7. **INSTALL SUCTION HOSE SUB-ASSEMBLY (See page AC-152)**
8. **CONNECT BATTERY NEGATIVE TERMINAL**

9. **PERFORM SYSTEM INITIALIZE**
   (a) Some systems need initialization when disconnecting the cable from the negative battery terminal.
   HINT:
   See page IN-29

10. **ADD ENGINE COOLANT (See page CO-7)**

11. **CHECK FOR ENGINE COOLANT LEAKS (See page CO-8)**

12. **CHARGE REFRIGERANT (See page AC-138)**

13. **WARM UP ENGINE (See page AC-139)**

14. **CHECK FOR LEAKAGE OF REFRIGERANT (See page AC-139)**

15. **INSTALL WINDSHIELD WIPER MOTOR AND LINK (See page WW-40)**

16. **INSTALL WINDSHIELD WIPER ARM AND BLADE ASSEMBLY RH (See page WW-40)**

17. **INSTALL WINDSHIELD WIPER ARM AND BLADE ASSEMBLY LH (See page WW-41)**

DISASSEMBLY

1. REMOVE MAGNETIC CLUTCH ASSEMBLY

(a) Remove the bolt and bracket.

(b) Place the compressor and magnetic clutch in a vise.

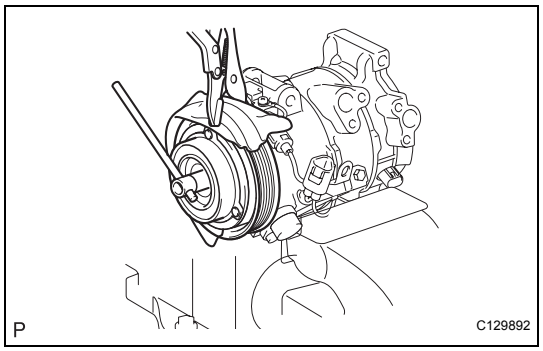

(c) Using vise pliers, hold the magnet clutch hub.

(d) Remove the bolt, magnetic clutch hub and magnetic clutch washer.

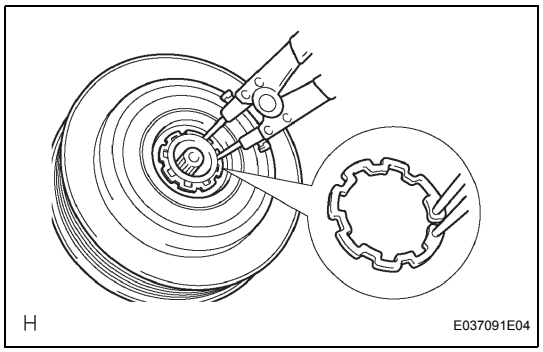

(e) Using a snap ring expander, remove the snap ring and magnetic clutch rotor.

(f) Disconnect the connector.

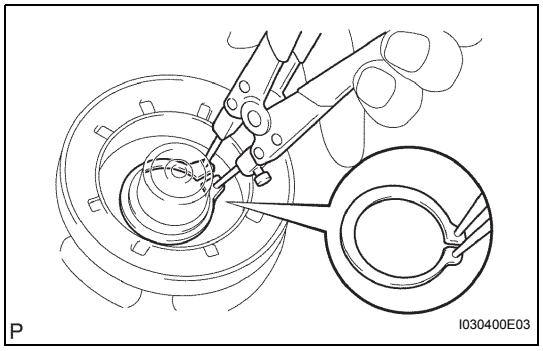

(g) Using a snap ring expander, remove the snap ring and magnetic clutch stator.

INSPECTION

1. INSPECT MAGNETIC CLUTCH CLEARANCE

(a) Set the dial indicator to the magnetic clutch hub.

(b) Connect the battery positive lead to terminal 3 of the magnetic clutch connector and the negative lead to the earth wire. Turn on and off the magnetic clutch and measure the clearance.

Standard clearance:

0.26 to 0.60 mm (0.010 to 0.024 in.)

If the measured value is out of the standard range, remove the magnetic clutch hub and adjust it with the magnetic clutch washers.

NOTICE:

Adjustment shall be performed with 3 or less magnetic clutch washers.

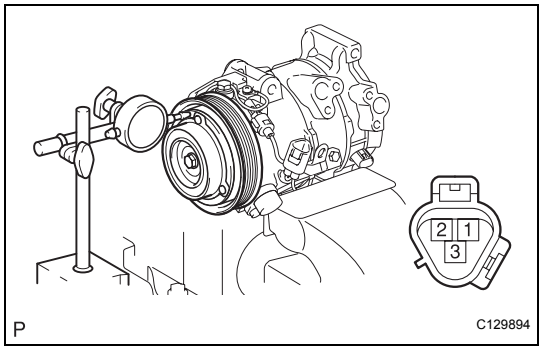

AC

(c) Remove the compressor and magnetic clutch from the vise.

2. INSPECT COMPRESSOR OIL

(a) Gradually discharge the refrigerant gas from the service valve when replacing the compressor and magnetic clutch with a new one. Drain the following amount of oil from the new compressor and magnetic clutch before installation.

Standard:

(Oil capacity inside the new compressor and magnetic clutch: 130 + 15 cc (4.6 + 0.51 fl.oz.) - (Remaining oil amount in the removed compressor and magnetic clutch) = (Oil amount to be removed before installation)

NOTICE:

- **When checking the compressor oil level, observe the precautions on the cooler removal / installation.**
- **Because compressor oil remains in the pipes of the vehicle, if anew compressor and magnetic clutch is installed without removing some oil, the oil amount becomes too much, preventing heat exchange in the refrigerant cycle and causing refrigerant failure.**
- **If the remaining oil the removed compressor and magnetic clutch is too small in volume, check for oil leakage.**
- **Be sure to use ND-OIL8 for compressor oil.**

3. INSPECT W/MAGNET CLUTCH COMPRESSOR ASSEMBLY

(a) Disconnect the connector from the w/ magnet clutch compressor assembly.

(b) Measure the resistance according to the value(s) in the table below.

Resistance

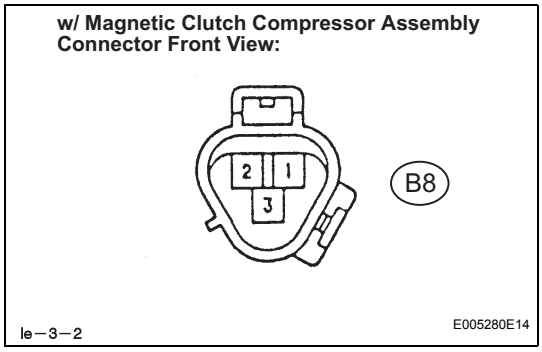

Tester connection	Condition	Specified condition
B8-3 - Body Ground	Always	Below 1 Ω

If the resistance is not as specified, replace the w/ magnet clutch compressor assembly.

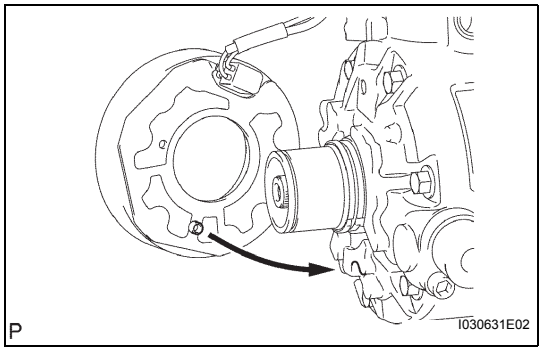

REASSEMBLY

1. INSTALL MAGNETIC CLUTCH ASSEMBLY

(a) Matching the parts shown in the illustration, install the magnetic clutch stator.

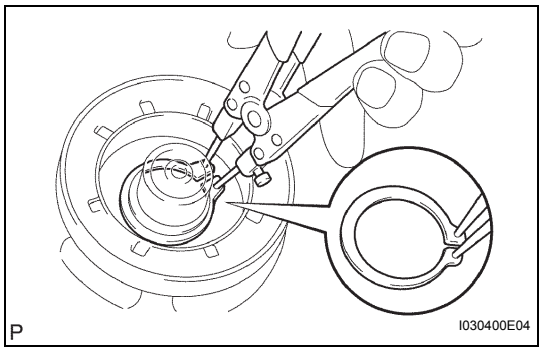

(b) Using a snap ring expander, install a new snap ring with the chamfered side facing up.
(c) Connect the connector.

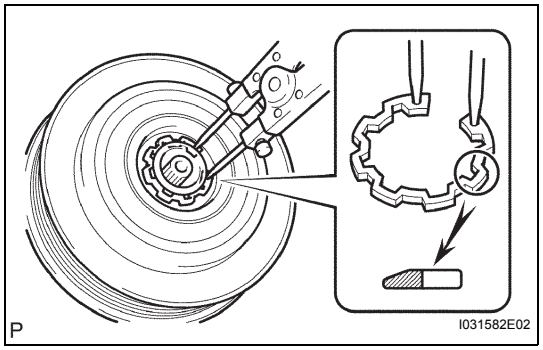

(d) Using a snap ring expander, install the magnetic clutch rotor and a new snap ring with the chamfered side facing up.
(e) Install the magnetic clutch washer and magnetic clutch hub.
NOTICE:
Do not change the combination of the magnetic clutch washer used before disassembly.

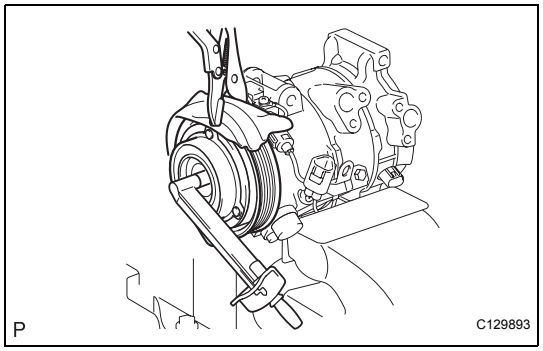

(f) Using vise pliers, hold the magnetic clutch hub and install the bolt.
Torque: 18 N*m (184 kgf*cm, 13 ft.*lbf)

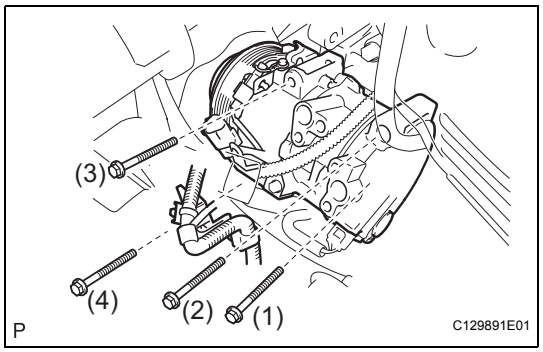

INSTALLATION

1. INSTALL COMPRESSOR AND MAGNETIC CLUTCH

(a) Install the compressor and magnetic clutch with the 4 bolts.
Torque: 25 N*m (250 kgf*cm, 18 ft.*lbf)
NOTICE:
Tighten the bolts in the order shown in the illustration to install the compressor and magnetic clutch.
(b) Connect the connector.

2. INSTALL SUCTION HOSE SUB-ASSEMBLY

(a) Remove the attached vinyl tape from the hose.
(b) Sufficiently apply compressor oil to a new O-ring and the fitting surface of the compressor and magnetic clutch.
Compressor oil:
ND-OIL 8 or equivalent
(c) Install the O-ring to the suction hose sub-assembly.

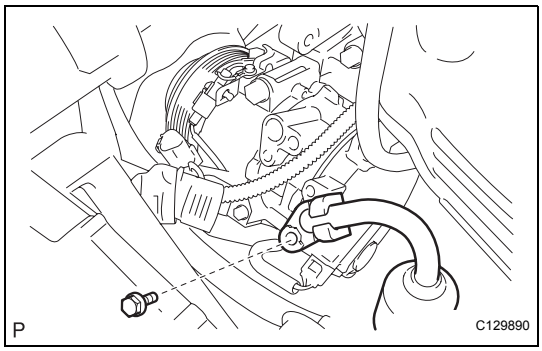

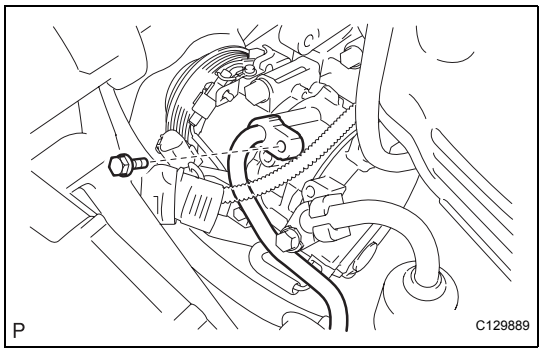

(d) Install the suction hose sub-assembly to the compressor and magnetic clutch with the nut.
Torque: 9.8 N*m (100 kgf*cm, 87 in.*lbf)

3. **INSTALL COOLER REFRIGERANT DISCHARGE HOSE NO.1**
   (a) Remove the attached vinyl tape from the hose.
   (b) Sufficiently apply compressor oil to a new O-ring and the fitting surface of the compressor and magnetic clutch.
   Compressor oil:
   ND-OIL 8 or equivalent
   (c) Install the O-ring to the cooler refrigerant discharge hose No.1.
   (d) Install the cooler refrigerant discharge hose No.1 to the compressor and magnetic clutch with the nut.
   Torque: 9.8 N*m (100 kgf*cm, 87 in.*lbf)
4. **INSTALL GENERATOR ASSEMBLY (See page CH-15)**
5. **INSTALL FAN AND GENERATOR V BELT (See page EM-46)**
6. **CHARGE REFRIGERANT (See page AC-138)**
7. **WARM UP ENGINE (See page AC-139)**
8. **CHECK FOR LEAKAGE OF REFRIGERANT (See page AC-139)**

AIR CONDITIONING UNIT

COMPONENTS

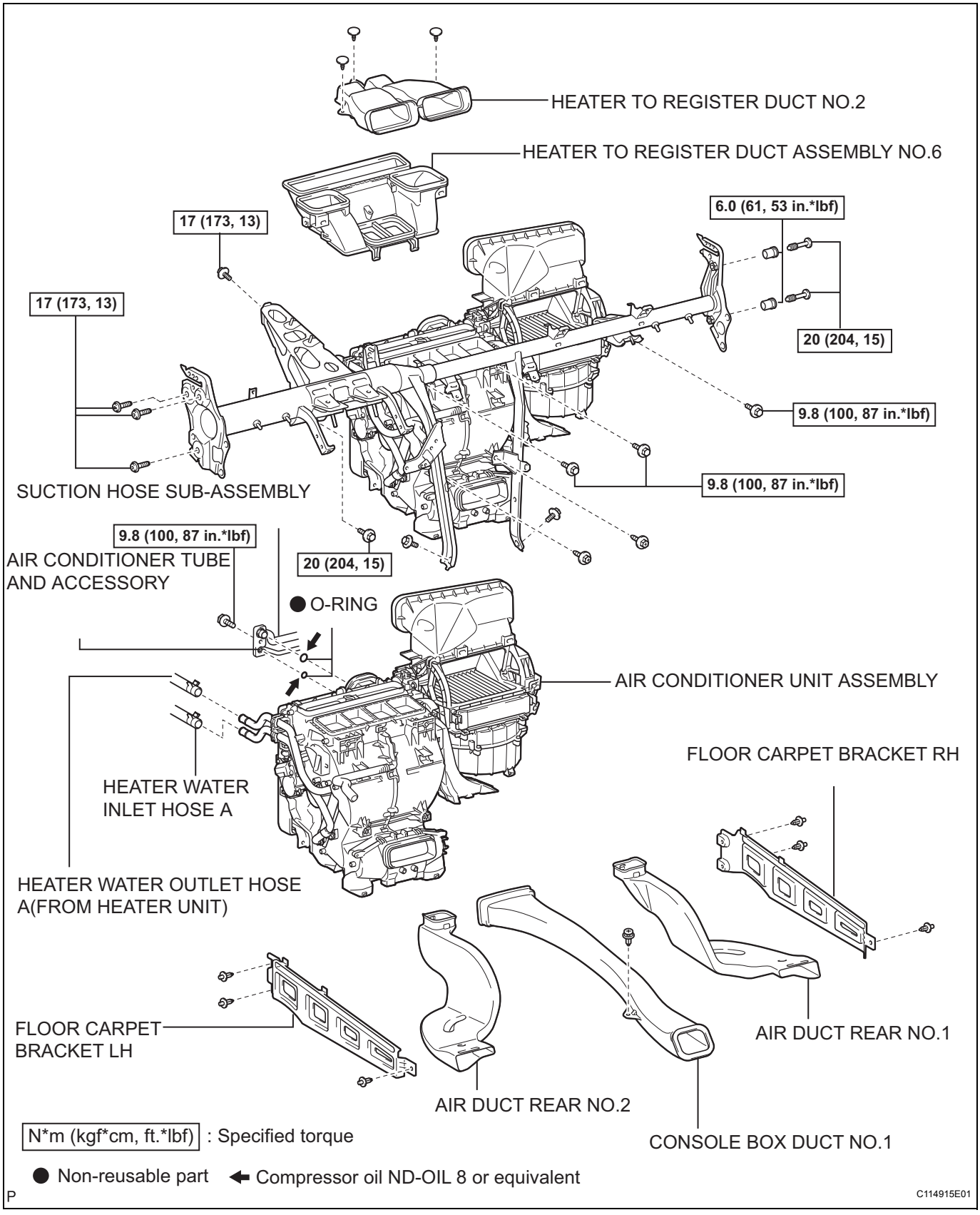

AC

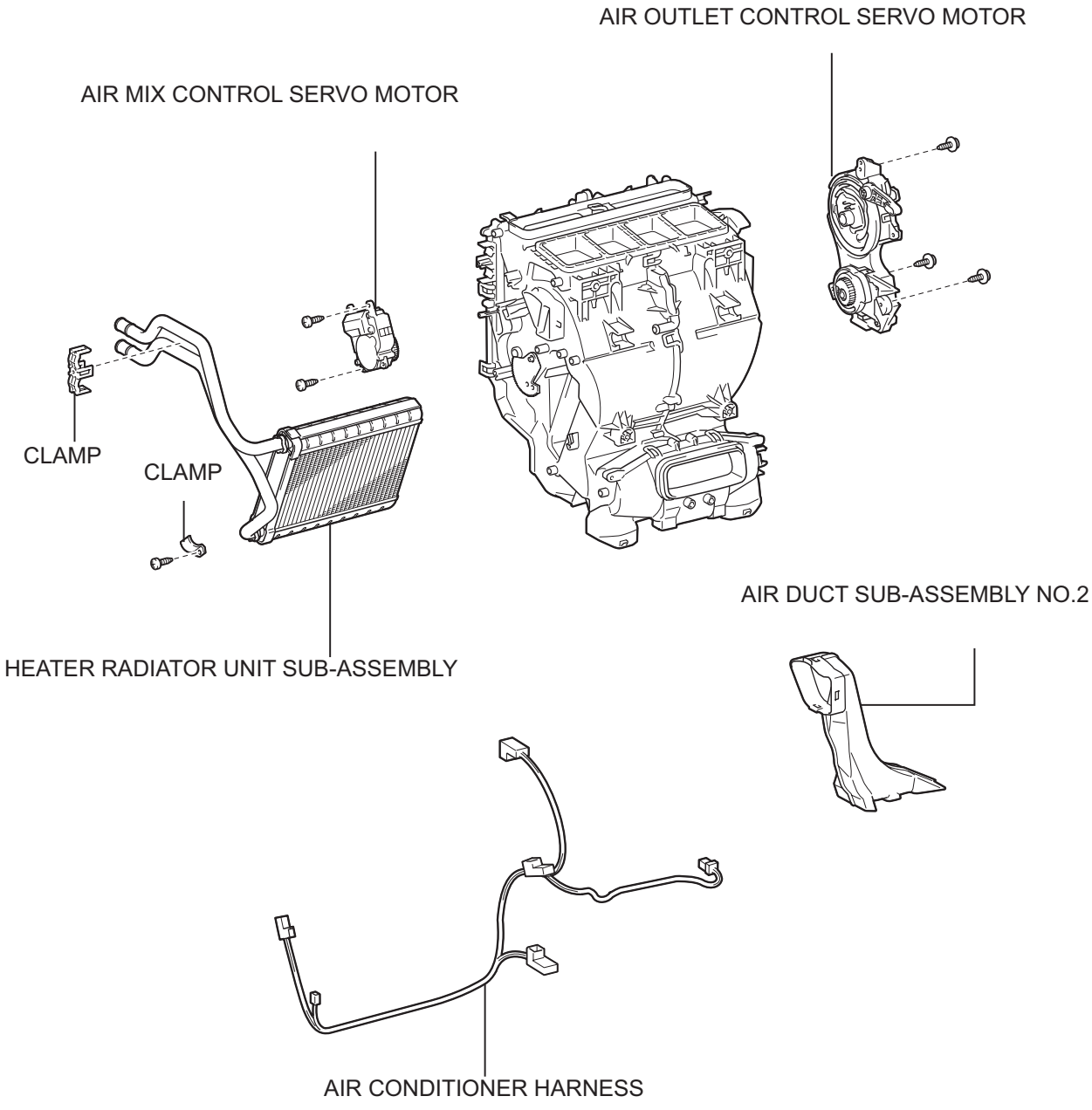

P

C114916E01

AC

REMOVAL

HINT:

- Installation is in the reverse order of removal.

1. **DISCHARGE REFRIGERANT FROM FROM REFRIGERATION SYSTEM (See page AC-138)**
2. **REMOVE AIR CLEANER INLET NO.2 (See page EM-28)**
3. **REMOVE AIR CLEANER INLET NO.1 (See page EM-28)**
4. **DISCONNECT HOOD LOCK ASSEMBLY**
5. **REMOVE RADIATOR SUPPORT UPPER (See page CO-31)**
6. **DISCONNECT COOLER REFRIGERANT DISCHARGE HOSE NO.1**
   (a) Remove the bolt and disconnect the cooler refrigerant discharge hose No.1 from the cooler condenser assembly.
   (b) Remove the O-ring from the cooler refrigerant discharge hose No.1.
   NOTICE:
   Seal the openings of the disconnected parts using vinyl tape to prevent moisture and foreign matter from entering.

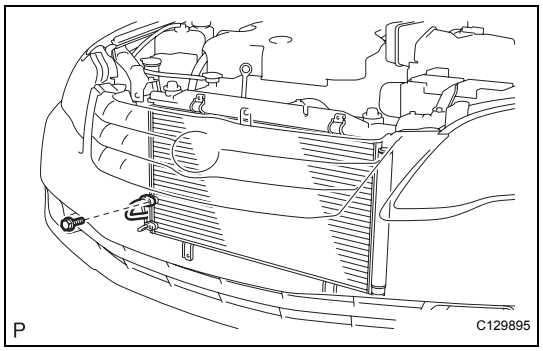

7. **DISCONNECT AIR CONDITIONER TUBE AND ACCESSORY**
   (a) Remove the bolt and disconnect the air conditioner tube & accessory from the cooler condenser assembly.
   NOTICE:
   Seal the openings of the disconnected parts using vinyl tape to prevent moisture and foreign matter from entering.

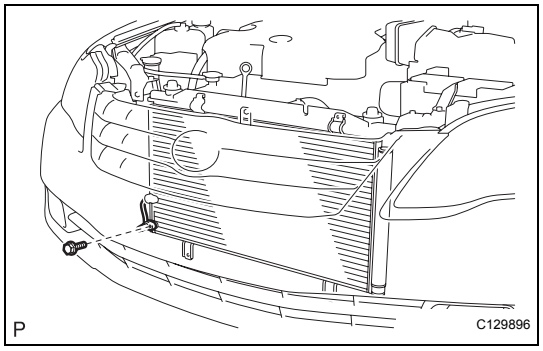

8. **REMOVE COOLER CONDENSER ASSEMBLY**
   (a) Remove the 4 bolts and cooler condenser assembly.

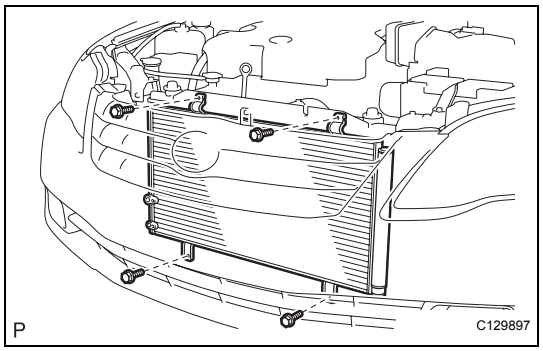

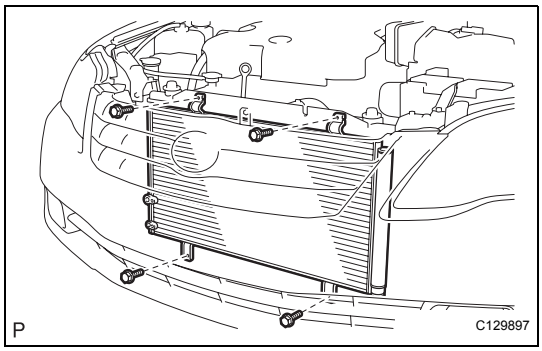

INSTALLATION

1. **INSTALL COOLER CONDENSER ASSEMBLY**
   (a) Install the cooler condenser assembly with the 4 bolts.
   Torque: 5.0 N*m (51 kgf*cm, 44 in.*lbf)

2. **INSTALL AIR CONDITIONER TUBE AND ACCESSORY**
   (a) Remove the attached vinyl tape from the tube and the connecting part of the cooler condenser assembly.
   (b) Sufficiently apply compressor oil to a new O-ring and the fitting surface of the hose joint.
   Compressor oil:
   ND-OIL 8 or equivalent
   (c) Install the O-ring on the air conditioning tube assembly.

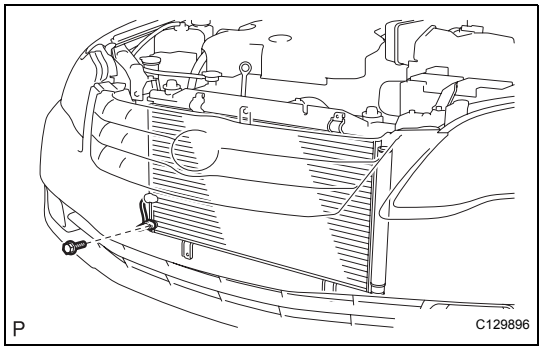

   (d) Install the air conditioner tube & accessory on the cooler condenser assembly with the bolt.
   Torque: 9.8 N*m (100 kgf*cm, 87 in.*lbf)

3. **INSTALL COOLER REFRIGERANT DISCHARGE HOSE NO.1**
   (a) Remove the attached vinyl tape from the pipe and the connecting part of the cooler condenser assembly.
   (b) Sufficiently apply compressor oil to a new O-ring and the fitting surface of the pipe joint.
   Compressor oil:
   ND-OIL 8 or equivalent
   (c) Install the O-ring on the cooler refrigerant discharge hose No.1.

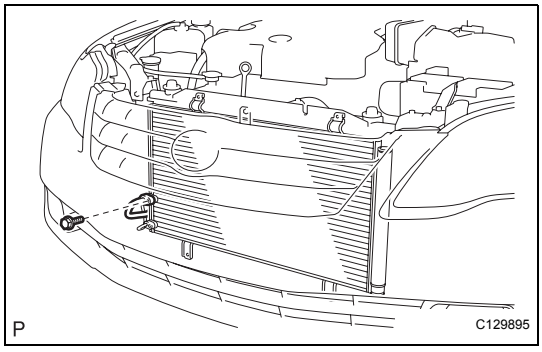

   (d) Install the cooler refrigerant discharge hose No.1.
   Torque: 9.8 N*m (100 kgf*cm, 87 in.*lbf)

4. **INSTALL RADIATOR SUPPORT UPPER (See page CO-31)**

5. **INSTALL HOOD LOCK ASSEMBLY**

6. **CHARGE REFRIGERANT (See page AC-138)**

7. **WARM UP ENGINE (See page AC-139)**

8. **CHECK FOR LEAKAGE OF REFRIGERANT (See page AC-139)**

TERMINALS OF ECU

1. Air Conditioning Amplifier

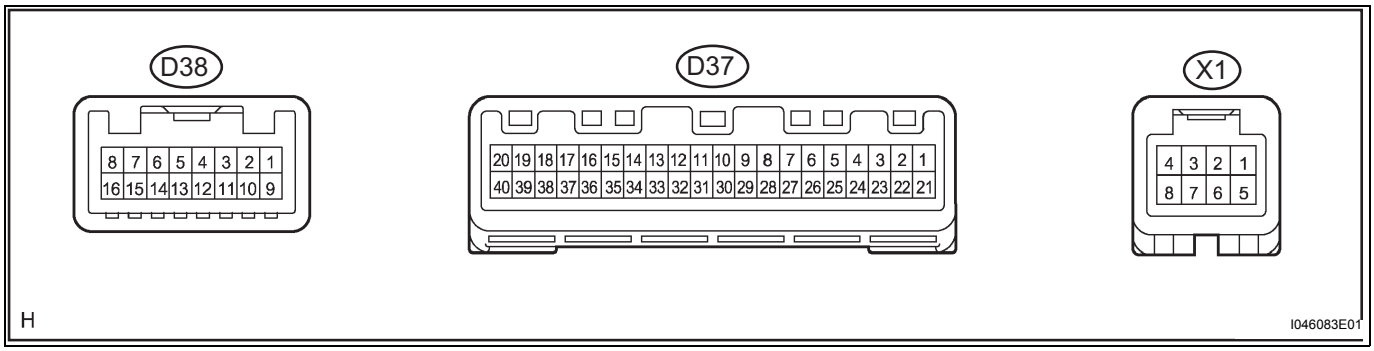

Terminal No. (Symbols)	Wiring color	Terminal Description	Condition	Specification
D37-1 (B) - D37-20 (GND)	SB - W-B	Power source (Back-up)	Always	10 to 14 V
D37-2 (SHR) - D37-20 (GND)	R - W-B	Seat heater operation signal (Passenger side)	Ignition switch on (IG). Seat heater switch: OFF	10 to 14 V
D37-2 (SHR) - D37-20 (GND)	R - W-B	Seat heater operation signal (Passenger side)	Ignition switch on (IG). Seat heater switch: ON	Below 1 V
D37-3 (MGC) - Body ground	V - Body ground	Compressor operation signal	Ignition switch on (IG). Magnetic clutch: ON	Below 1 V
D37-3 (MGC) - Body ground	V - Body ground	Compressor operation signal	Ignition switch on (IG). Magnetic clutch: OFF	10 to 14 V
D37-4 (SCL1) - D37-20 (GND)	P - W-B	Illumination signal	Ignition switch on (IG). Seat heater switch: ON	Below 1 V
D37-4 (SCL1) - D37-20 (GND)	P - W-B	Illumination signal	Ignition switch on (IG). Seat heater switch: OFF	10 to 14 V
D37-5 (SOL+) - Body ground	L - W-B	External variable control solenoid current value signal	Ignition switch on (IG). AUTO switch: NO	Pulse generation
D37-6 (SCR1) - D37-20 (GND)	B - W-B	Illumination signal	Ignition switch on (IG). Seat heater switch: ON	Below 1 V
D37-6 (SCR1) - D37-20 (GND)	B - W-B	Illumination signal	Ignition switch on (IG). Seat heater switch: OFF	10 to 14 V
D37-9 (LOCK) - D37-17 (SG-3)	B - R	A/C lock sensor signal	Engine running. Magnetic clutch: ON Blower switch: ON	Pulse generation (See waveform 2)
D37-11 (BLW) - D37-20 (GND)	R - W-B	Blower motor speed control signal	Ignition switch on (IG). Blower switch: ON	Pulse generation (See waveform 1)
D37-13 (BLW) - D7-38 (SG-2)	G - R	A/C pressure sensor signal	Start engine Operate A/C system Refrigerant pressure: Abnormal pressure (More than 3,030 kPa (31.0 kgf/cm, 440 psi))	4.7 V or higher
D37-13 (BLW) - D7-38 (SG-2)	G - R	A/C pressure sensor signal	Start engine Operate A/C system Refrigerant pressure: Abnormal pressure (Less than 180 kPa (1.9 kgf/cm, 27 psi))	Below 0.7 V
D37-13 (BLW) - D7-38 (SG-2)	G - R	A/C pressure sensor signal	Start engine Operate A/C system Refrigerant pressure: Abnormal pressure (Less than 3,030 kPa (31.0 kgf/cm, 440 psi) and more than 180 kPa (1.9 kgf/cm, 27 psi))	0.7 to 4.7 V
D37-14 (TSP) - D37-20 (GND)	Y - W-B	Solar sensor signal (Passenger side)	Ignition switch on (IG). Solar sensor subjected to electric light.	0.8 to 4.3 V
D37-14 (TSP) - D37-20 (GND)	Y - W-B	Solar sensor signal (Passenger side)	Ignition switch on (IG). Solar sensor covered by cloth.	Below 0.8 V

Terminal No. (Symbols)	Wiring color	Terminal Description	Condition	Specification
D37-16 (TR) - D37-19 (SG-1)	BR - LG	Room temperature sensor signal	Ignition switch on (IG). Cabin temperature 25°C (77°F).	1.8 to 2.2 V
D37-16 (TR) - D37-19 (SG-1)	BR - LG	Room temperature sensor signal	Ignition switch on (IG). Cabin temperature 40°C (104°F).	1.2 to 1.6 V
D37-20 (GND) - Body ground	W-B - Body ground	Ground for main power supply	Always	Below 1 V
D37-21 (IG+) - D37-20 (GND)	G - W-B	Power source (IG)	Ignition switch on (IG).	10 to 14 V
D37-21 (IG+) - D37-20 (GND)	G - W-B	Power source (IG)	Ignition switch off.	Below 1 V
D37-22 (LIN1) - D37-20 (GND)	GR - W-B	LIN communication signal	Ignition switch on (IG).	Pulse generation
D37-24 (SHL) - D37-20 (GND)	V - W-B	Seat heater operation signal (Driver side)	Ignition switch on (IG). Seat heater switch: OFF	10 to 14 V
D37-24 (SHL) - D37-20 (GND)	V - W-B	Seat heater operation signal (Driver side)	Ignition switch on (IG). Seat heater switch: ON	Below 1 V
D37-26 (S5-2) - D37-38 (SG-2)	BR - R	Pressure sensor operation voltage	Ignition switch on (IG).	4.5 to 5.5 V
D37-28 (TACO) - D37-20 (GND)	V - W-B	Engine speed signal	Engine running. A/C switch: OK	Pulse generation (See waveform 3)
D37-30 (MPX+) - D37-20 (GND)	(*1) LG - W-B, (*2) B - W-B	Multiplex communication system	Multiplex communication circuit	Pulse generation
D37-31 (MPX-) - D37-20 (GND)	L - W-B	Multiplex communication system	Multiplex communication circuit	Pulse generation
D37-35 (TSD) - D37-20 (GND)	O - W-B	Solar sensor signal (Driver side)	Ignition switch on (IG). Solar sensor subjected to electric light.	0.8 to 4.3 V
D37-35 (TSD) - D37-20 (GND)	O - W-B	Solar sensor signal (Driver side)	Ignition switch on (IG). Solar sensor covered by cloth.	Below 0.8 V
D38-2 (SW5) - D38-11 (SG-4)	O - R	Seat heater control signal (Passenger side)	Seat heater switch: COOL (HI)	0.17 V
D38-2 (SW5) - D38-11 (SG-4)	O - R	Seat heater control signal (Passenger side)	Seat heater switch: COOL (MID)	0.48 to 1.17 V
D38-2 (SW5) - D38-11 (SG-4)	O - R	Seat heater control signal (Passenger side)	Seat heater switch: COOL (LO)	1.31 to 2.01 V
D38-2 (SW5) - D38-11 (SG-4)	O - R	Seat heater control signal (Passenger side)	Seat heater switch: OFF	2.15 to 2.83 V
D38-2 (SW5) - D38-11 (SG-4)	O - R	Seat heater control signal (Passenger side)	Seat heater switch: HOT (LO)	2.97 to 3.67 V
D38-2 (SW5) - D38-11 (SG-4)	O - R	Seat heater control signal (Passenger side)	Seat heater switch: HOT (MID)	3.81 to 4.49 V
D38-2 (SW5) - D38-11 (SG-4)	O - R	Seat heater control signal (Passenger side)	Seat heater switch: HOT (HI)	4.8 V
D38-3 (SW4) - D38-11 (SG-4)	BR - R	Seat heater control signal (Driver side)	Seat heater switch: COOL (HI)	0.17 V
D38-3 (SW4) - D38-11 (SG-4)	BR - R	Seat heater control signal (Driver side)	Seat heater switch: COOL (MID)	0.48 to 1.17 V
D38-3 (SW4) - D38-11 (SG-4)	BR - R	Seat heater control signal (Driver side)	Seat heater switch: COOL (LO)	1.13 to 2.01 V
D38-3 (SW4) - D38-11 (SG-4)	BR - R	Seat heater control signal (Driver side)	Seat heater switch: OFF	2.15 to 2.83 V
D38-3 (SW4) - D38-11 (SG-4)	BR - R	Seat heater control signal (Driver side)	Seat heater switch: HOT (LO)	2.97 to 3.67 V
D38-3 (SW4) - D38-11 (SG-4)	BR - R	Seat heater control signal (Driver side)	Seat heater switch: HOT (MID)	3.81 to 4.49 V
D38-3 (SW4) - D38-11 (SG-4)	BR - R	Seat heater control signal (Driver side)	Seat heater switch: HOT (HI)	4.8 V

Terminal No. (Symbols)	Wiring color	Terminal Description	Condition	Specification
D38-4 (TSHR) - D38-11 (SG-7)	L - O	Seat heater temperature sensor signal (Passenger side)	Ignition switch on (IG). Temperature of seat heater sensor: 30°C (86°F).	2.6 to 3.0 V
D38-4 (TSHR) - D38-11 (SG-7)	L - O	Seat heater temperature sensor signal (Passenger side)	Ignition switch on (IG). Temperature of seat heater sensor: 50°C (122°F).	1.8 to 2.2 V
D38-5 (TSHR) - D38-12 (SG-8)	LG - R	Seat heater temperature sensor signal (Driver side)	Ignition switch on (IG). Temperature of seat heater sensor: 30°C (86°F).	2.6 to 3.0 V
D38-5 (TSHR) - D38-12 (SG-8)	LG - R	Seat heater temperature sensor signal (Driver side)	Ignition switch on (IG). Temperature of seat heater sensor: 50°C (122°F).	1.8 to 2.2 V
D38-7 (S5-4) - D38-11 (SG-4)	L - R	Seat heater switch position sensor signal	Ignition switch on (IG).	4.5 to 5.5 V
D38-5 (ROUT) - D37-20 (GND)	W - W-B	Seat climate blower control signal (Passenger side)	Ignition switch on (IG). Seat climate control blower dial (Passenger side): Minimum → Maximum	Pulse generation (See waveform)
D38-11 (SG-7) - D37-20 (GND)	O - W-B	Ground for seat heater	Always	Below 1 V
D38-12 (SG-8) - D37-20 (GND)	R - W-B	Ground for seat heater (Driver side)	Always	Below 1 V
D38-5 (LOUT) - D37-20 (GND)	GR - W-B	Seat climate blower control signal (Driver side)	Ignition switch on (IG). Seat climate control blower dial (Driver side): Minimum → Maximum	Pulse generation (See waveform)
X1-2 (BUSG) - Body ground	-	Ground for BUS IC	Always	Below 1 V
X1-3 (BUS) - X1-2 (BUSG)	-	BUS IC control signal	Ignition switch off → on (IG)	Pulse generation
X1-4 (BBUS) - X1-2 (BUSG)	-	Power supply for BUS IC	Ignition switch off.	Below 1 V
X1-4 (BBUS) - X1-2 (BUSG)	-	Power supply for BUS IC	Ignition switch on (IG).	10 to 14 V
X1-6 (TEA) - X1-5 (SGA)	-	Evaporator temperature sensor signal	Ignition switch on (IG). Evaporator temperature 0°C (32°F).	2.0 to 2.4 V
X1-6 (TEA) - X1-5 (SGA)	-	Evaporator temperature sensor signal	Ignition switch on (IG). Evaporator temperature 15°C (59°F).	1.4 to 1.8 V

(*1): w/ Smart Key System

(*2): w/o Smart Key System

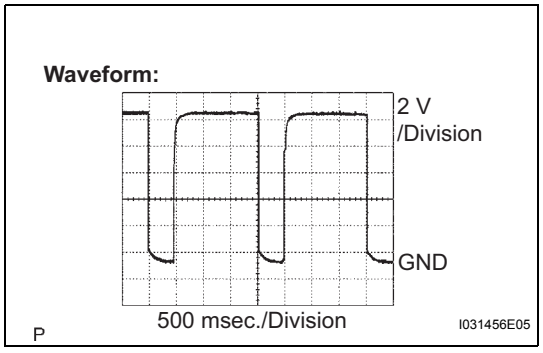

(a) waveform 1:

(1) Measure the waveform between terminal D37-11 (BLW), D38-16 (LOUT), D38-8 (ROUT) and body ground or air conditioning amplifier.

OK:

Waveform appears as shown in the illustration.

HINT:

As the air flow amount increases, the waveform gets narrow.

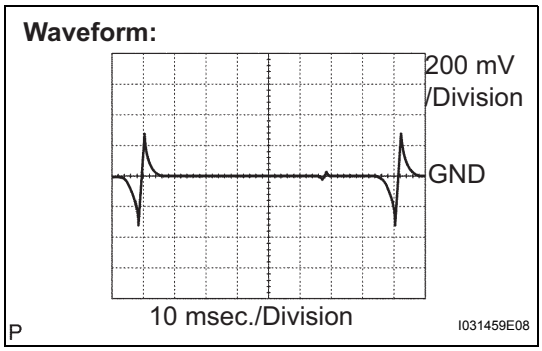

(b) waveform 2:
(1) Measure the waveform between terminal D37-9 (LOCK) and body ground of air conditioning amplifier
OK:
Waveform appears as shown in the illustration.

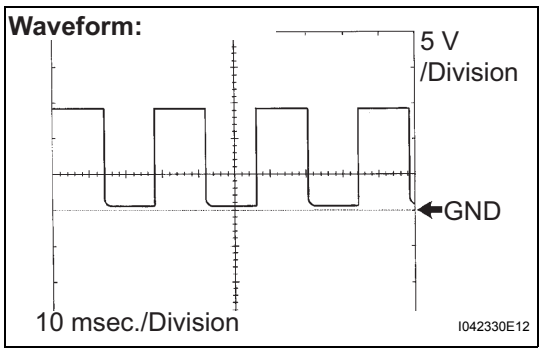

(c) waveform 3:
(1) Measure the waveform between terminal D37-28 (TACO) and body ground of air conditioning amplifier
OK:
Waveform appears as shown in the illustration.
HINT:
As the engine speed becomes faster, the waveform gets narrow.

2. Heater Control Panel LH

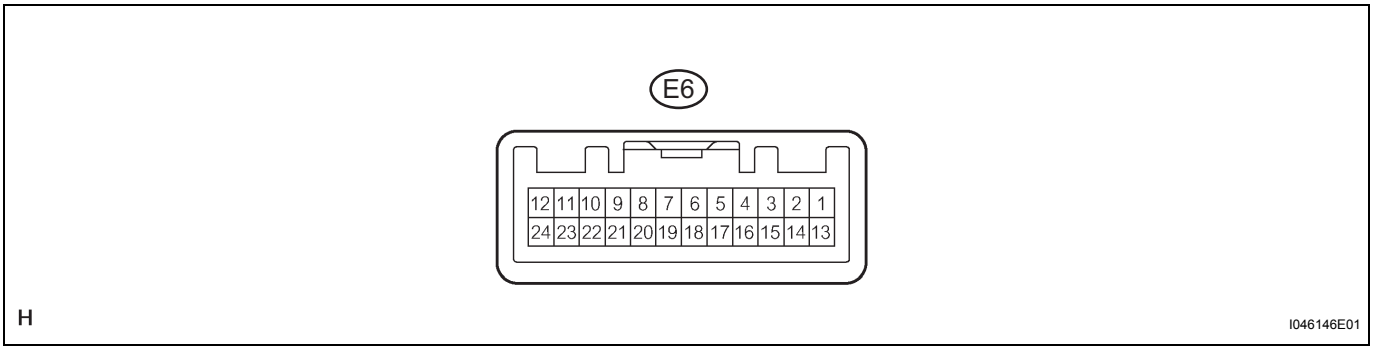

Terminal No. (symbols)	Wiring color	Terminal Description Condition	Condition	Specification
E6-1 (IG+) - E6-24 (GND)	B - W-B	Power source (IG)	Ignition switch on (IG).	10 to 14 V
E6-2 (PIL+) - E6-22 (PIL-)	G - B	Illumination signal	Ignition switch on (IG).	10 to 14 V
E6-11 (PSE) - Body ground	W - Body ground	Ground for Illumination	Always	Below 1 V
E6-13 (ILL+) - E6-21 (ILL-)	W - V	Illumination signal	Ignition switch on (IG). Light control switch: TAIL or HEAD	10 to 14 V
E6-14 (LED+) - E6-24 (GND)	O - W-B	Illumination signal	Ignition switch on (IG).	10 to 14 V
E6-14 (LED+) - E6-8 (LREC)	O - L	Illumination signal	Ignition switch on (IG). REC switch: ON	10 to 14 V
E6-14 (LED+) - E6-10 (LAUT)	O - P	Illumination signal	Ignition switch on (IG). AUTO switch: ON	10 to 14 V
E6-14 (LED+) - E6-9 (L A/C)	O - GR	Illumination signal	Ignition switch on (IG). A/C switch: ON	10 to 14 V
E6-19 (TX+) - E6-24 (GND)	L - W-B	LIN communication signal	Ignition switch on (IG).	Pulse generation
E6-24 (GND) - Body ground	W-B - Body ground	Ground for heater control panel	Always	Below 1 V

BLOWER UNIT

COMPONENTS

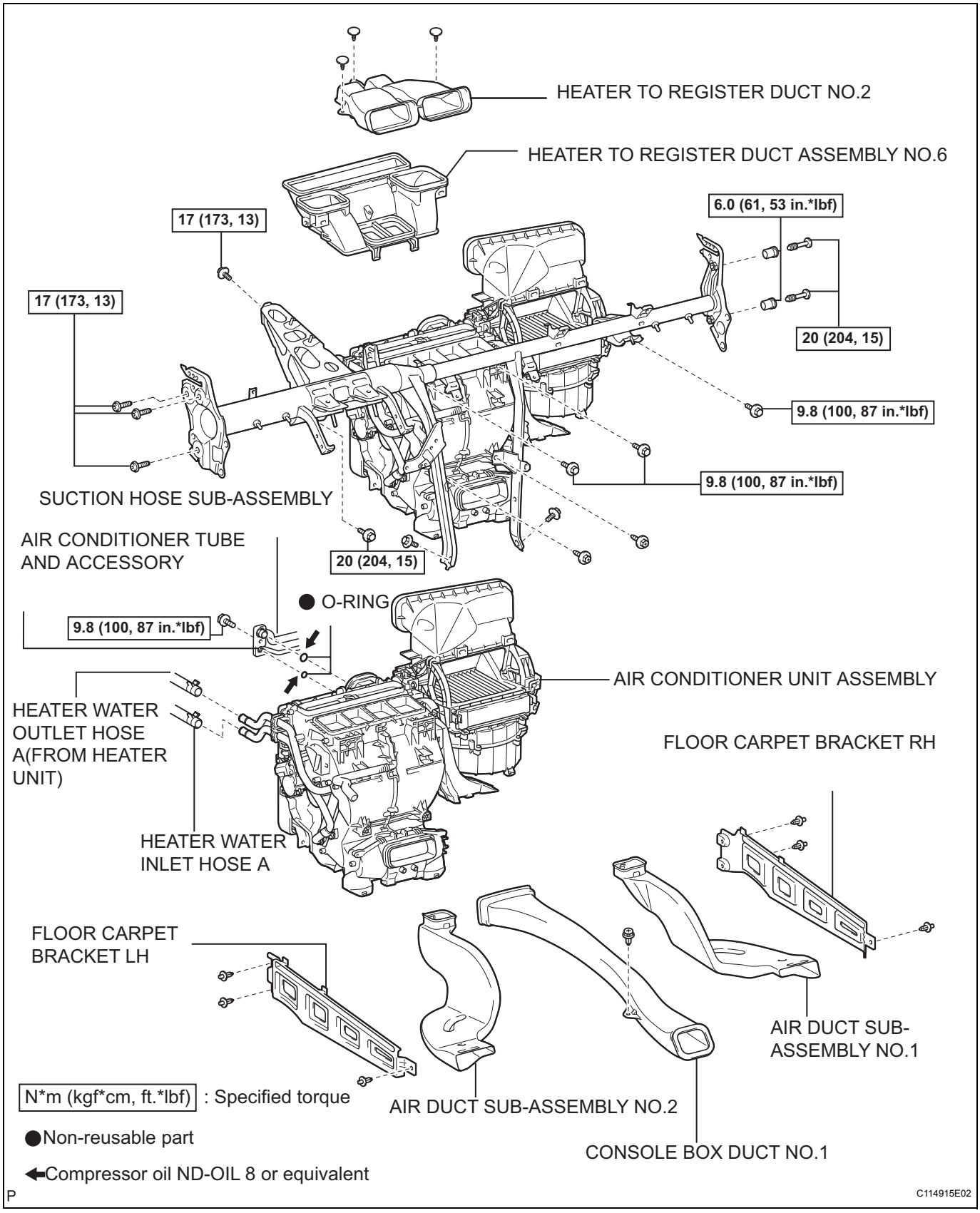

AC

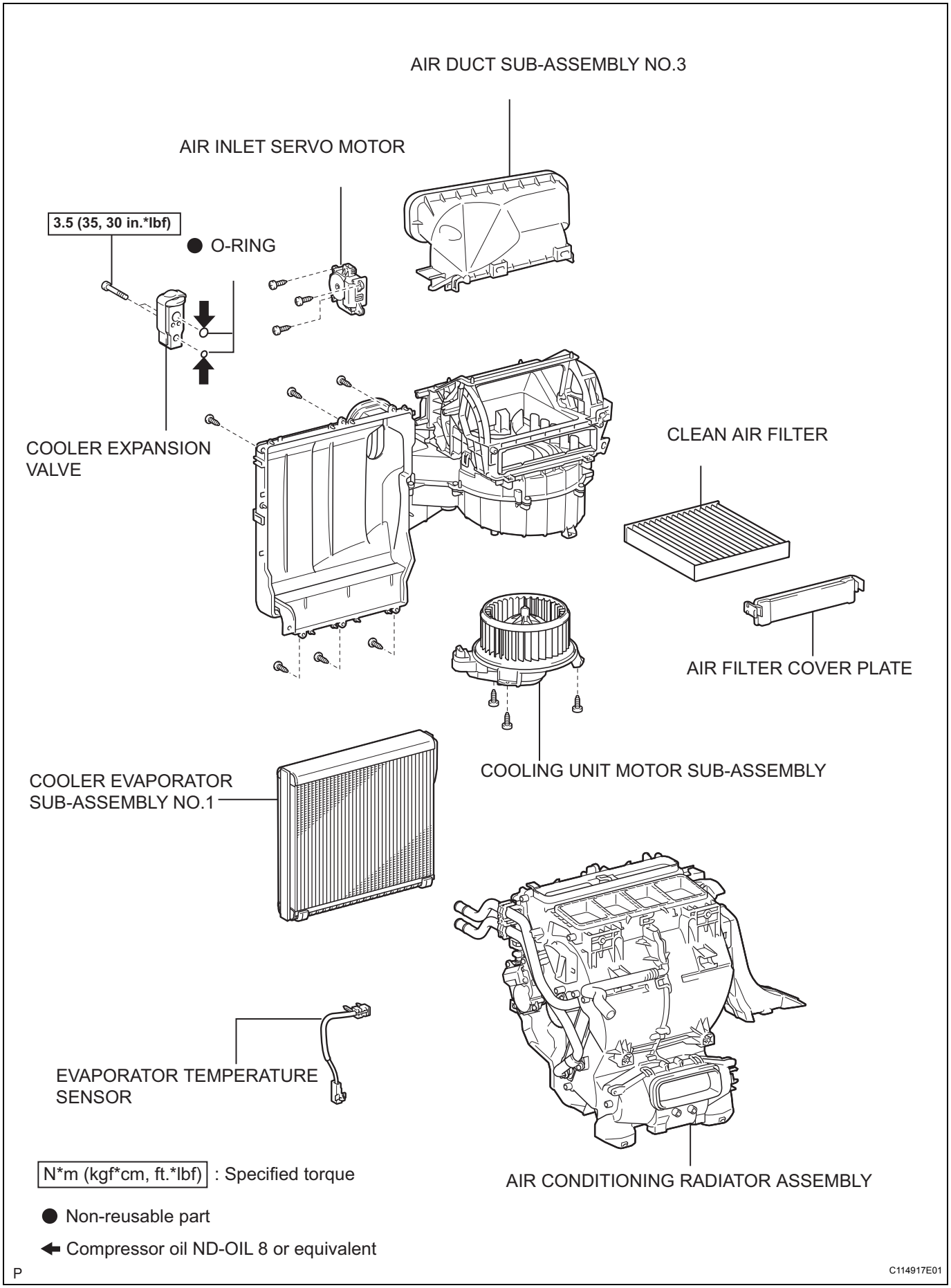
AIR DUCT SUB-ASSEMBLY NO.3
AIR INLET SERVO MOTOR
3.5 (35, 30 in.*lbf)
● O-RING
COOLER EXPANSION VALVE
CLEAN AIR FILTER
AIR FILTER COVER PLATE
COOLING UNIT MOTOR SUB-ASSEMBLY
COOLER EVAPORATOR SUB-ASSEMBLY NO.1
EVAPORATOR TEMPERATURE SENSOR
AIR CONDITIONING RADIATOR ASSEMBLY
N*m (kgf*cm, ft.*lbf) : Specified torque
● Non-reusable part
⬅ Compressor oil ND-OIL 8 or equivalent
P
C114917E01

AC

DIAGNOSIS SYSTEM

1. LIST OF OPERATION METHODS

(a) By operating each of the A/C control switches as shown in the diagram below, it is possible to enter the diagnostic check mode.

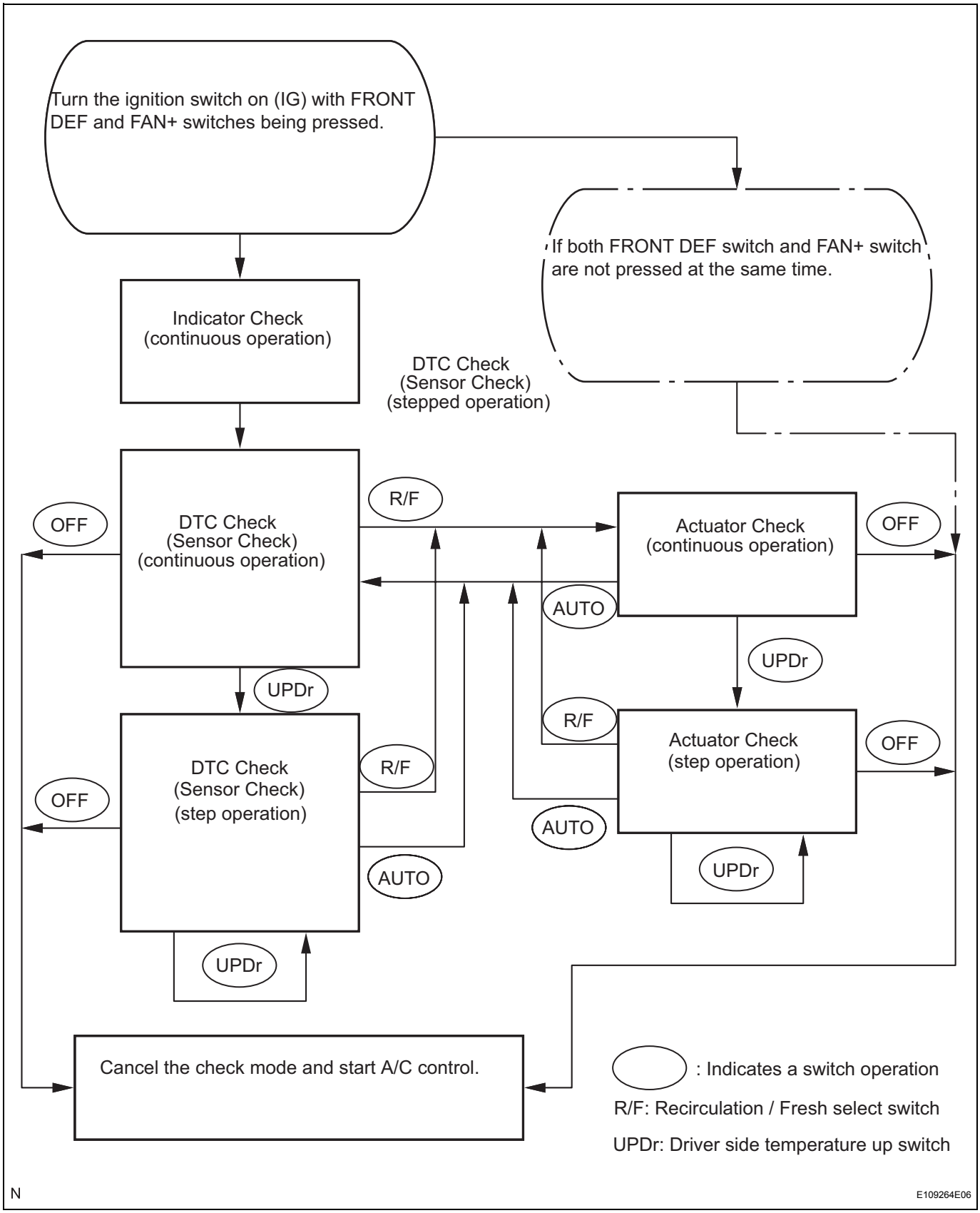
Turn the ignition switch on (IG) with FRONT DEF and FAN+ switches being pressed.
If both FRONT DEF switch and FAN+ switch are not pressed at the same time.
Indicator Check (continuous operation)
DTC Check (Sensor Check) (stepped operation)
DTC Check (Sensor Check) (continuous operation)
OFF
R/F
Actuator Check (continuous operation)
OFF
AUTO
UPDr
UPDr
R/F
Actuator Check (step operation)
OFF
DTC Check (Sensor Check) (step operation)
R/F
OFF
AUTO
AUTO
UPDr
UPDr
Cancel the check mode and start A/C control.
: Indicates a switch operation
R/F: Recirculation / Fresh select switch
UPDr: Driver side temperature up switch
N
E109264E06

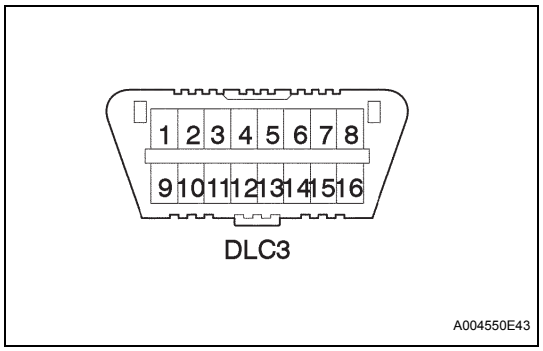

2. CHECK DLC3

(a) The vehicle's ECM uses CAN and the ISO 9141-2 for communication protocol. The terminal arrangement of the DLC3 complies with SAE J1962 and meets the ISO 9141-2 format.

Symbols (Terminal No.)	Terminal Description	Condition	Specified condition
SIL (7) - SG (5)	Bus "+" line	During transmission	Pulse generation
CG (4) - Body ground	Chassis ground	Always	Below 1 Ω
SG (5) - Body ground	Signal ground	Always	Below 1 Ω
BAT (16) - Body ground	Battery positive	Always	11 to 14 V
CANH (6) - CANL (14)	HIGH-level CAN bus line	IG switch OFF	54 to 67 Ω
CANH (6) - Battery positive	HIGH-level CAN bus line	IG switch OFF	1MΩ or Higher
CANH (6) - CG (4)	HIGH-level CAN bus line	IG switch OFF	3kΩ or Higher
CANL (14) - Battery positive	LOW-level CAN bus line	IG switch OFF	1MΩ or Higher
CANL (14) - CG (4)	LOW-level CAN bus line	IG switch OFF	3kΩ or Higher

HINT:

If the display shows a communication error message when you have connected the cable of the intelligent tester to the DLC3, turned the ignition switch ON and operated the tester, there is a problem on the vehicle side or tool side.

- If the communication is normal when the tool is connected to another vehicle, inspect the DLC3 on the original vehicle.
- If the communication is still impossible when the tool is connected to another vehicle, the problem is probably in the tool itself, so consult the Service Department listed in the tool's instruction manual.

DTC CHECK / CLEAR

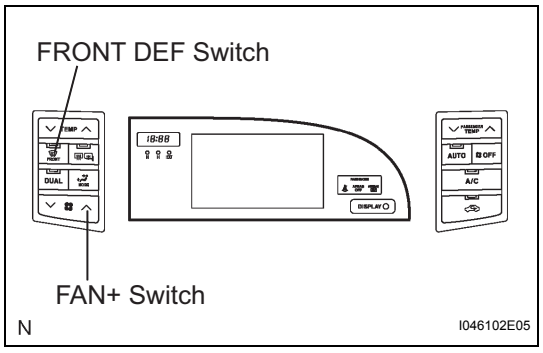

1. INDICATOR CHECK

(a) Turn the ignition switch on (IG) while pressing the FRONT DEF switch and FAN+ switch simultaneously.

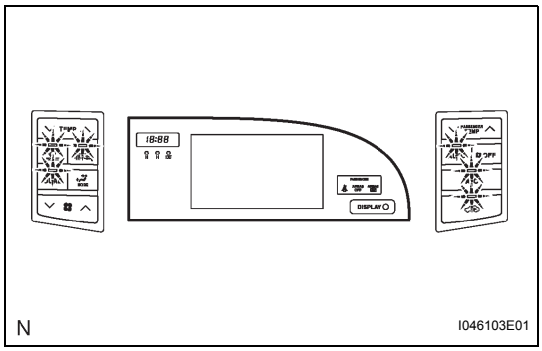

(b) Check that the all indicators come on.

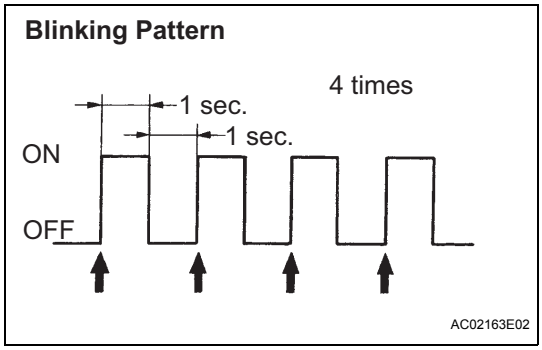

(c) The all indicators go off 4 times in succession at 1 second intervals.
HINT:
- After the indicator check is completed, the system enters the DTC mode automatically.
- Press the "OFF" switch to cancel the indicator mode.

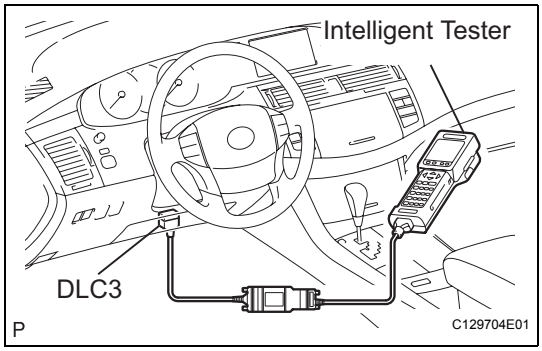

2. DTC CHECK USING INTELLIGENT TESTER

(a) Connect the intelligent tester to the DLC3.
(b) Turn the ignition switch on (IG).
(c) Read the DTC following the prompts on the tester screen. Please refer to the intelligent tester operator's manual for further details.
(d) Clear the DTCs.
HINT:
After repairing the malfunctions, clear the DTC.
(1) Connect the intelligent tester to the DLC3.
(2) Turn the ignition switch on (IG).
(3) Erase the DTCs following the prompts in the tester screen.
HINT:
Refer to the intelligent tester operator's manual for further details.

BLOWER MOTOR

INSPECTION

1. INSPECT BLOWER MOTOR

(a) Remove the blower motor.

(b) Disconnect the connector from the cooling unit motor sub-assembly w/ fan.

(c) Connect the positive (+) lead to terminal 2 of the blower motor connector, and the negative (-) lead to terminal 1.

Blower motor Connector Front View:

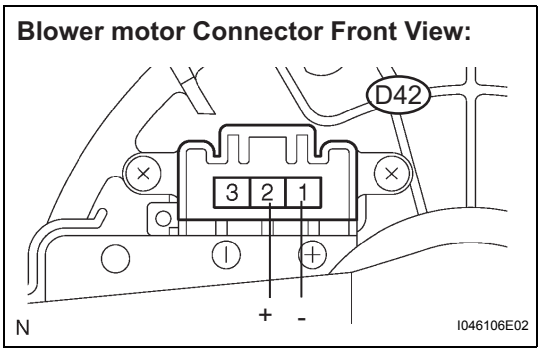

DATA LIST / ACTIVE TEST

1. DATA LIST

HINT:

From the DATA LIST displayed on the intelligent tester, you can read the values of the displays, sensors, actuators and so on without parts removal. Reading the DATA LIST as the first step of troubleshooting is one way to shorten labor time.

(a) Connect intelligent tester to the DLC3.
(b) Turn the ignition switch on (IG).
(c) From the display on the tester, select the "DATA LIST".

Item	Measurement Item / Display (Range)	Normal Condition	Diagnostic Note
ROOM TEMP	Room temperature sensor / min.: -6.5°C(20.3°F) max.: 57.25°C(135.05°F)	Actual cabin temperature is displayed	-
AMBI TEMP SENS	Ambient temperature sensor / min.: -23.3°C(-9.94°F) max.: 65.95°C(150.71°F)	Actual cabin temperature is displayed	-
SOLAR SENS-D	Solar sensor (Driver side) / min.: 0 max.: 255	Increases as brightness increases	-
SOLAR SENS-P	Solar sensor (Passenger side) / min.: 0 max.: 255	Increases as brightness increases	-
COOLANT TEMP	Room temperature sensor / min.: 1.3°C(34.34°F) max.: 90.55°C(194.99°F)	Actual engine coolant temperature is displayed while the engine is displayed warmed up	-
SET TEMP-D	Set temperature (Driver side) / min.: 0 max.: 255	Actual set temperature is displayed (driver side)	-
SET TEMP-P	Set temperature (Passenger side) / min.: 0 max.: 255	Actual set temperature is displayed (Passenger side)	-
ESTIMATE TEMP-D	Estimated temperature (driver side) / min.: -358.4°C(-613.12°F) max.: 358.4°C(677.12°F)	Actual estimated temperature is displayed (driver side)	-
ESTIMATE TEMP-P	Estimated temperature (Passenger side) / min.: -358.4°C(-613.12°F) max.: 358.4°C(677.12°F)	Actual estimated temperature is displayed (Passenger side)	-
BLOWER LEVEL	Blower motor speed level / min.: 0 level max.: 31 level	Increases in the range between 0 and 31 as the speed increases	-
AMBI TEMP	Adjusted ambient temperature (Passenger side) / min.: -30.8°C(-23.44°F) max.: 50.8°C(123.44°F)	-	-
SET TEMP SHIFT	Shift set temperature / +2C, +1C, NORMAL, -1C, -2C	Customized value will be displayed	-
AIR INLET MODE	Air inlet mode / AUTO, MANUAL	Customized value will be displayed	-
COMPRESSOR MODE	Compressor mode / AUTO, MANUAL	Customized value will be displayed	-
COMPRS / DEF OPER	Compressor / DEF operation mode / LINK, NORMAL	Customized value will be displayed	-
EVAP CTRL	Evaporator control / AUTO, MANUAL	Customized value will be displayed	-
BUTTON PRS BUZ	Button press buzzer / ON, OFF	Customized value will be displayed	-

Item	Measurement Item / Display (Range)	Normal Condition	Diagnostic Note
FOOT AIR LEAK	Foot air leak / ON, OFF	Customized value will be displayed	-
AUTO BLOW UP	Foot / DEF automatic blow up function /ON, OFF	Customized value will be displayed	-
FOOT / DEF MODE	Foot / DEF mode / ON, OFF	Customized value will be displayed	-
AMBIENT TMP SFT	Ambient temperature Shift / +3C, +2C, +1C, Normal, -1C, -2C, -3C	Customized value will be displayed	-
DESTINATION	Destination / DOMEST, USA, EUROPE, AUSTRAL, MIDEAST, NO INFO	Changes with destinations	-
REG PRESS SENS	Regulator pressure sensor / min.: 0 max.: 255	Actual regulator Pressure is displayed	-
REG CTRL CURRNT	Regulator control current / min.: 0 A max.: 255 A	-	-
AIR MIX PULSE-D	Air mix servomotor target pulse (D side) / min.: 0, max.: 255	Damper is at "MAX. COOL" : 5 (pulse) Damper is at "MAX. HOT" : 103 (pulse)	-
AIR MIX PULSE-P	Air mix servomotor target pulse (P side) / min.: 0, max.: 255	Damper is at "MAX. COOL" : 105 (pulse) Damper is at "MAX. HOT" : 7 (pulse)	-
ARI OUTLET PULSE-D	Air outlet servomotor target pulse (D side) / min.: 0, max.: 255	Damper is at "FACE" : 8 (pulse) Damper is at "B/L" : 30 (pulse) Damper is at "FOOT" : 67 (pulse) Damper is at "F/D" : 80 (pulse) Damper is at "DEF" : 97 (pulse)	-
A/I DAMP PLS	Air inlet damper target pulse / min.: 0, max.: 255	Damper is at "RECIRCULATION" : 7 (pulse) Damper is at "FRESH" : 28 (pulse)	-
EVAP FIN TEMP	Evaporator Fin Thermistor / min.: 0, max.: 255	-	-
#COES	Number of Trouble / min.: 0, max.: 255	Number of DTCs will be displayed	-

2. ACTIVE TEST

HINT:

Performing the ACTIVE TEST using the intelligent tester allows the relays, VSV, actuators and so on to operate without parts removal. Performing the ACTIVE TEST as the first step of troubleshooting is one way to shorten labor time.

It is possible to display the DATA LIST on the intelligent tester during the ACTIVE TEST.

(a) Connect the intelligent tester to the DLC3.
(b) Turn the ignition switch on (IG).
(c) From the display on tester, perform the "ACTIVE TEST".

Item	Test Details / Display (Range)	Diagnostic Note
BLOWER MOTOR	Blower motor / min.:0, max.: 31 level	-
A/C MAG CLUTCH	Magnetic clutch relay / OFF, ON	-
DEFOGGER RLY-R	Defogger relay (Rear) / OFF, ON	-
AIR MIX PULSE-D	Air mix servomotor pulse (D side) / min.: 0, max.: 255	-

AC

Item	Test Details / Display (Range)	Diagnostic Note
AIR MIX PULSE-P	Air mix servomotor pulse (P side) / min.: 0, max.: 255	-
AIR OUT PULSE-D	Air outlet servomotor pulse (D side) / min.: 0, max.: 255	-
A/I DAMP PLS	Air inlet damper tamper target pulse / min.: 0, max.: 255	-

COMPRESSOR AND MAGNETIC CLUTCH

COMPONENTS

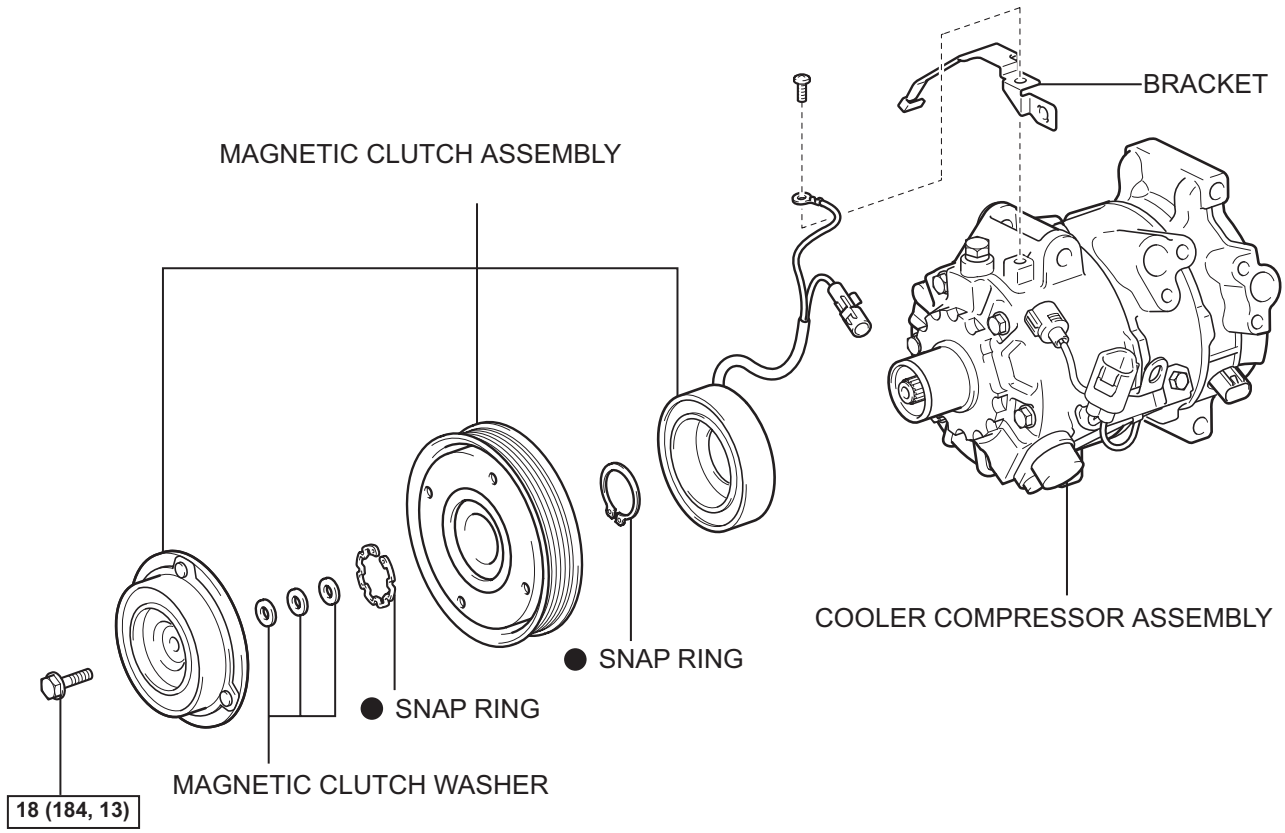

N*m (kgf*cm, ft.*lbf) : Specified torque

● Non-reusable part

P

C114918E02

AC

REMOVAL

1. **DISCHARGE REFRIGERANT FROM REFRIGERATION SYSTEM (See page AC-138)**
2. **REMOVE FAN AND GENERATOR V BELT (See page EM-28)**
3. **REMOVE GENERATOR ASSEMBLY (See page CH-9)**
4. **DISCONNECT COOLER REFRIGERANT DISCHARGE HOSE NO.1**
   (a) Remove the bolt and disconnect the cooler refrigerant discharge hose No.1.
   (b) Remove the O-ring from the cooler refrigerant discharge hose No.1.
   NOTICE:
   Seal the openings of the disconnected parts using vinyl tape to prevent moisture and foreign matter from entering.

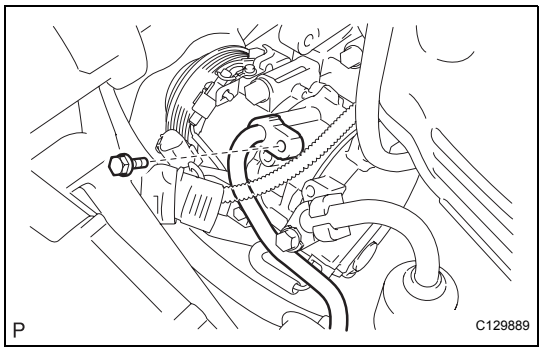

5. **DISCONNECT SUCTION HOSE SUB-ASSEMBLY**
   (a) Remove the bolt and disconnect the suction hose sub-assembly.
   (b) Remove the O-ring from the suction hose No.1.
   NOTICE:
   Seal the openings of the disconnected parts using vinyl tape to prevent moisture and foreign matter from entering.

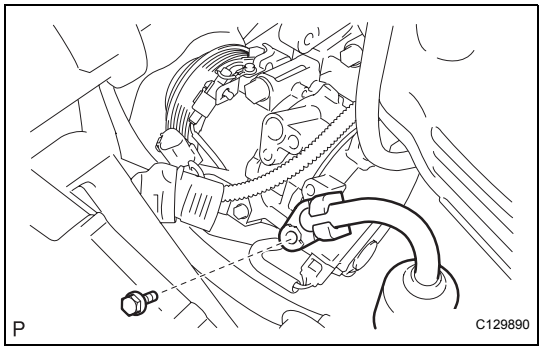

6. **REMOVE COMPRESSOR AND MAGNETIC CLUTCH**
   (a) Disconnect the connector.
   (b) Remove the 4 bolts and compressor and magnetic clutch.

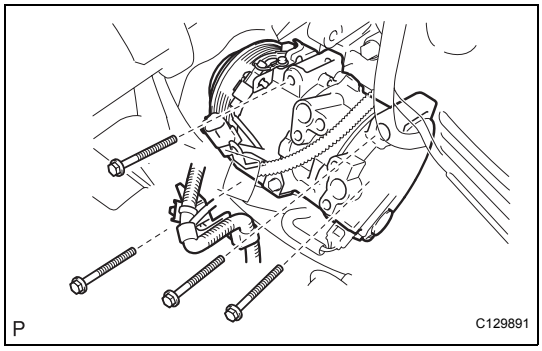

DIAGNOSTIC TROUBLE CODE CHART

If a trouble code is displayed during the DTC check (sensor check), check the circuit listed for that code in the table below (proceed to the page given for that circuit).

AIR CONDITIONING SYSTEM

DTC No.	Detection Item	Trouble Area	Memory*6	See page
B1411/11 *1	Room Temperature Sensor Circuit	1. A/C room temperature sensor 2. Harness or connector between A/C room temperature sensor and A/C amplifier 3. A/C amplifier	Memorized (8.5 min. or more)	AC-46
B1412/12 *2	Ambient Temperature Sensor Circuit	1. A/C ambient temperature sensor 2. Harness or connector between A/C ambient temperature sensor and engine room J/B assembly 3. Engine room J/B assembly	Memorized (8.5 min. or more)	AC-50
B1413/13	Evaporator Temperature Sensor Circuit	1. A/C evaporator temperature sensor 2. Harness or connector between A/C evaporator temperature sensor and A/C amplifier 3. A/C amplifier	Memorized (8.5 min. or more)	AC-55
B1421/21 *3	Solar Sensor Circuit (Passenger Side)	1. A/C solar sensor 2. Harness or connector between A/C solar sensor and A/C amplifier 3. A/C amplifier	Memorized (8.5 min. or more) (Only when circuit is shorted)	AC-58
B1422/22 *4	Compressor Lock Sensor Circuit	1. A/C lock sensor (w/ magnet clutch compressor assembly) 2. Compressor drive belt 3. Harness or connector between A/C amplifier and ECM 4. Harness or connector between A/C lock sensor (w/ magnet clutch compressor assembly) and A/C amplifier 5. ECM 6. A/C amplifier	-	AC-62
B1423/23	Pressure Switch Circuit	1. A/C Pressure sensor 2. Harness or connector between A/C pressure sensor and A/C amplifier 3. Refrigerant pipe line 4. A/C amplifier	-	AC-66
B1424/24 *3	Solar Sensor Circuit (Driver Side)	1. A/C solar sensor 2. Harness or connector between A/C solar sensor and A/C amplifier 3. A/C amplifier	Memorized (8.5 min. or more) (Only when circuit is shorted)	AC-70
B1441/41	Air Mix Damper Control Servo Motor Circuit (Passenger Side)	1. Air mix control servomotor 2. Air conditioning harness assembly 3. A/C amplifier	Memorized (30 sec. or more)	AC-74

DTC No.	Detection Item	Trouble Area	Memory*6	See page
B1442/42	Air Inlet Damper Control Servo Motor Circuit	1. Air inlet control servomotor 2. Air conditioning harness assembly 3. A/C amplifier	Memorized (30 sec. or more)	AC-76
B1443/43	Air Outlet Damper Control Servo Motor Circuit	1. Air outlet control servomotor 2. Air conditioning harness assembly 3. A/C amplifier	Memorized (30 sec. or more)	AC-78
B1446/46	Air Mix Damper Control Servo Motor Circuit (Driver Side)	1. Air mix control servomotor 2. Air conditioning harness assembly 3. A/C amplifier	Memorized (30 sec. or more)	AC-80
B1451/51	Compressor Solenoid Circuit	1. w/ magnet clutch compressor assembly 2. Harness and connector between A/C amplifier and solenoid of the externally changeable compressor 3. A/C amplifier	-	AC-82
B1463/63 *5	Driver Side Seat Heater Temperature Sensor Circuit	1. Seat heater control sub-assembly 2. Seat heater LH (Seat cushion) 3. Harness or connector between seat heater control sub-assembly and A/C amplifier 4. A/C amplifier	-	AC-85
B1464/64 *5	Front Passenger Side Seat Heater Temperature Sensor Circuit	1. Seat heater control sub-assembly 2. Seat heater LH (Seat cushion) 3. Harness or connector between seat heater control sub-assembly and A/C amplifier 4. A/C amplifier	-	AC-88
B1497/97	BUS IC Communication Malfunction	1. Air conditioning harness assembly 2. A/C amplifier	Memorized (10 sec. or more)	AC-91
B1499/99	Multiplex Communication Circuit	Open in multiplex communication circuit	-	AC-93

HINT:

- *1: If the cabin temperature is approx. -18.6°C (-1.48°F) or lower, DTC B1411/11 may be output even though the system is normal.
- *2: If the ambient temperature is approx. -52.9°C (-63.22°F) or lower, a malfunction code may be output even though the system is normal.
- *3: If the check is performed in a dark place, DTC B1421/21 or B1424/24 (solar sensor circuit abnormal) could be displayed.
- *4: Compressor lock (DTC B1422/22) is indicated only for a current occurring malfunction.
  To confirm DTC B1422/22, perform the following steps:
  (a)With engine ON, enter the DTC check mode.

(b) Press the R/F (Recirculation / Fresh) switch to enter actuator check mode, and set the operation to Step No.3.
(c) Press the AUTO switch to return to DTC check mode.
(d) The DTC is displayed after approx. 3 sec.

- *5: Even though the system is in good condition, DTC is output when the seat sensor temperature senses -40°C (-40°F) and over 99°C (210.2°F).
- *6: The A/C amplifier memorizes the DTC of the respective malfunction that has occurred for a period of the time indicated in the brackets.

ACTUATOR CHECK

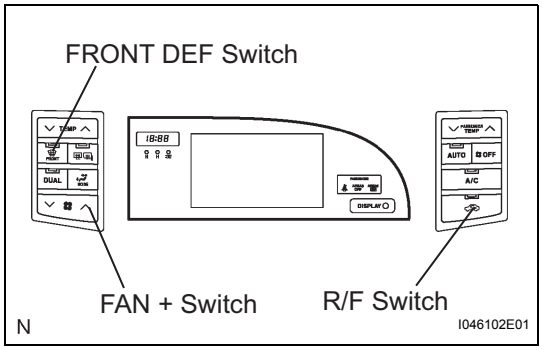

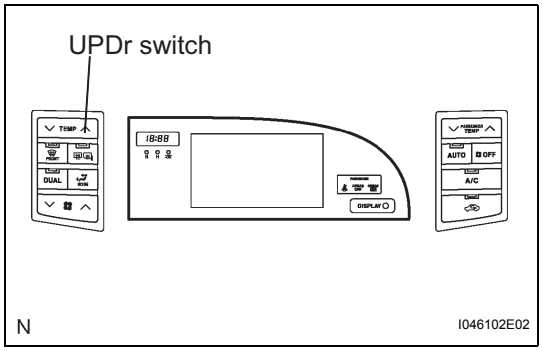

1. ACTUATOR CHECK

(a) Turn the ignition switch on (IG) while pressing the FRONT DEF switch and FAN+ switch simultaneously.
(b) Press the R/F (Recirculation / Fresh) switch.
(c) As each damper, motor and relay automatically operate the actuator check at 1 second intervals from step No.1 to No.10 continuously check the temperature and air flow visually and by hand.
(d) If a slower display is desired, press the driver temperature up (UPDr) switch and change the display in the step operation. Each time the driver temperature up (UPDr) switch is pressed, the display changes by 1 step.
HINT:
- The buzzer sounds when the displayed trouble code changes.
- Codes are displayed from the smaller to the larger numbers in order.

(e) To cancel the check mode, press the "OFF" switch.

Step No.	Display code	Conditions				
		Blower level	Air outlet damper	Air inlet damper	Air mix damper (Dr, Pa)	A/C compressor
1	0	0	FACE	FRESH	"COOL" side (0 %)	OFF
2	1	1	FACE	FRESH	"COOL" side (0 %)	OFF
3	2	17	FACE	R/F	"COOL" side (0 %)	A/C ON
4	3	17	FACE	RECIRCULATION	"COOL" side (0 %)	A/C ON
5	4	17	B/L	RECIRCULATION	"COOL" / "HOT" (50.0 % opened)	A/C ON
6	5	17	B/L	RECIRCULATION	"COOL" / "HOT" (50.0 % opened)	A/C ON
7	6	17	FOOT	FRESH	"COOL" / "HOT" (50.0 % opened)	A/C ON
8	7	17	FOOT	FRESH	"HOT" side (100 %)	A/C ON
9	8	17	F/D	FRESH	"HOT" side (100 %)	A/C ON
10	9	31	DEF	FRESH	"HOT" side (100 %)	A/C ON

CONDENSER

COMPONENTS

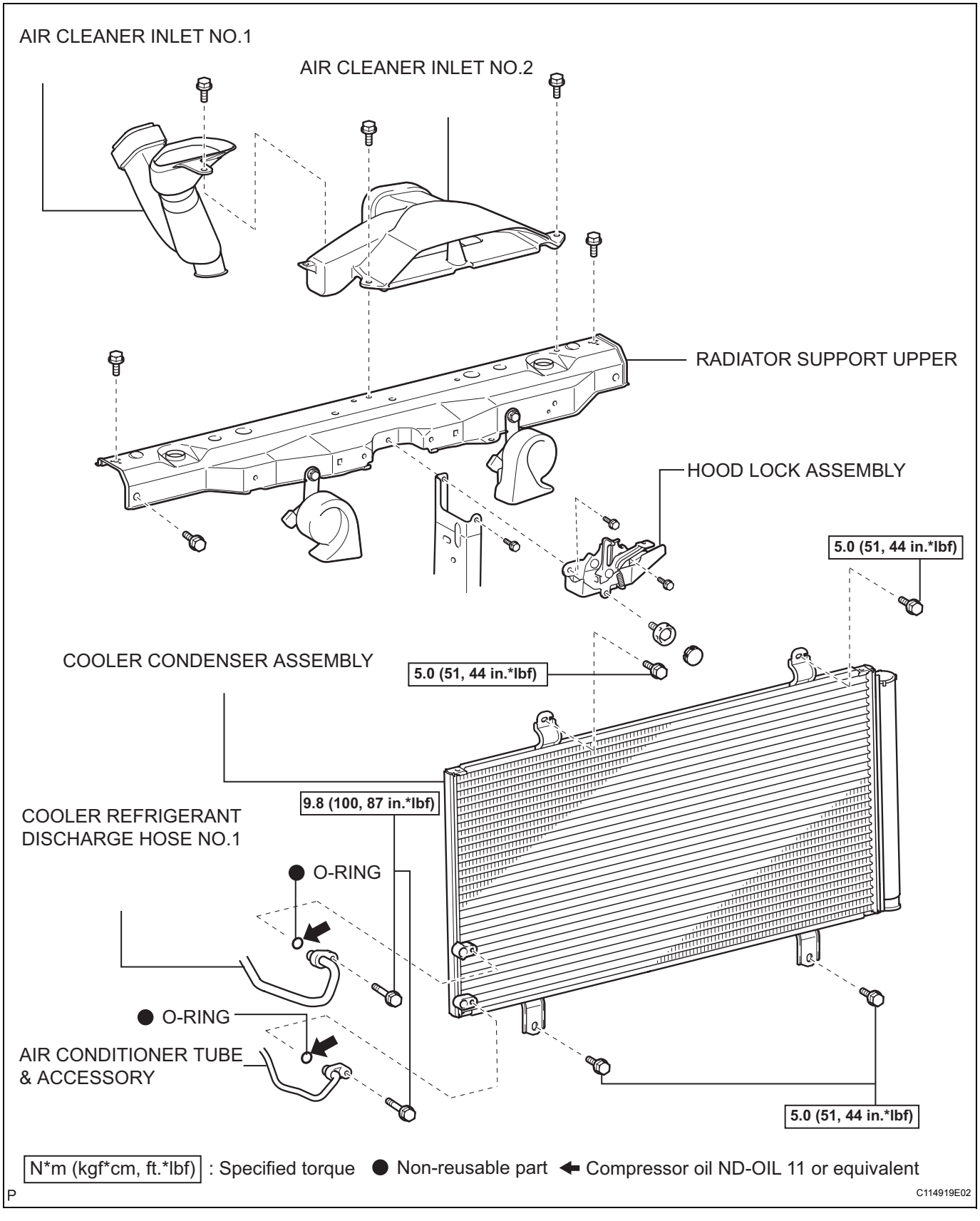

AC

ON-VEHICLE INSPECTION

1. INSPECT COOLER CONDENSER ASSEMBLY

(a) If the fins of the cooler condenser assembly are dirty, clean them with water and dry them with compressed air.

NOTICE:

Do not damage the fins of the condenser assembly.

(b) If the fins of the cooler condenser assembly are bent, straighten them using a screwdriver or pliers.

2. CHECK CONDENSER FOR LEAKAGE OF REFRIGERANT

(a) Check the pipe joints for gas leakage using a halogen leak detector.

(b) Check the tightening torque of the joints if gas leakage is detected in any of the pipe joints.

DTC	B1411/11	Room Temperature Sensor Circuit

DESCRIPTION

This sensor detects the cabin temperature that is used as the basis for temperature control and sends appropriate signals to the A/C amplifier.

DTC No.	Detection item	Trouble Area
B1411/11	Room temperature sensor circuit (Open or short)	• A/C room temperature sensor • Harness or connector between A/C room temperature sensor and A/C amplifier • A/C amplifier

WIRING DIAGRAM

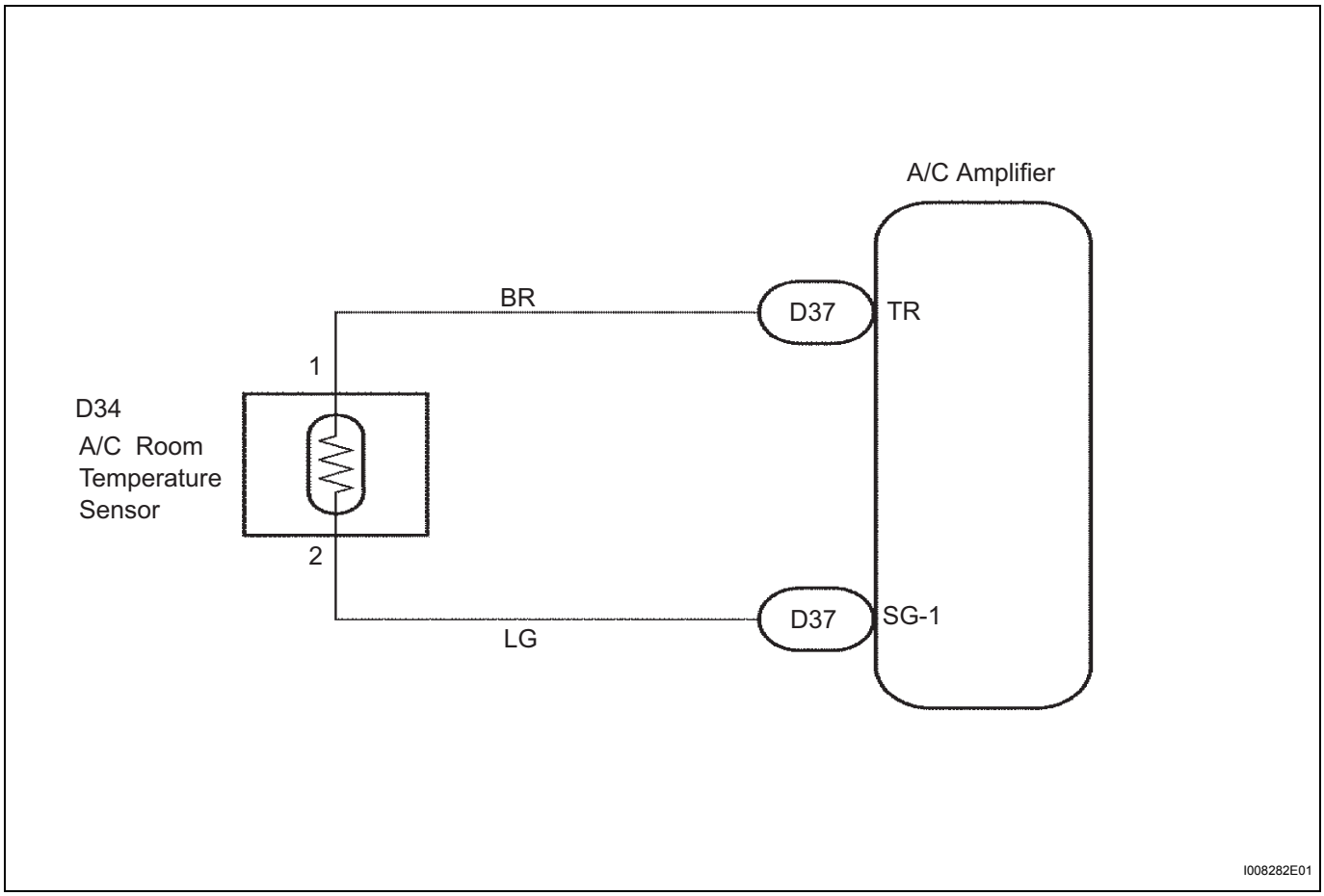

INSPECTION PROCEDURE

1	READ VALUE OF INTELLIGENT TESTER

(a) Connect the intelligent tester to the DLC3.
(b) Turn the ignition switch on (IG) and push the intelligent tester main switch on.

AC

(c) Select the item below in the DATA LIST, and read the display on the intelligent tester.

Item	Measure Item / Display (Range)	Normal Condition	Diagnostic Note
ROOM TEMP	Room temperature sensor / min.: -6.5°C (20.3°F) max.: 57.25°C (135.05°F)	Actual cabin temperature is displayed	-

OK:

The display is as specified in the normal condition.

Result

Result	Proceed to
NG	A
OK (Checking from the PROBLEM SYMPTOM TABLE)	B
OK (Checking from the DTC)	C

B → **PROCEED TO NEXT CIRCUIT INSPECTION SHOWN IN PROBLEM SYMPTOMS TABLE**

C → **REPLACE AIR CONDITIONING AMPLIFIER ASSEMBLY**

A

2 INSPECT AIR CONDITIONING AMPLIFIER (TR - SG-1)

Air Conditioning Amplifier Connector Wire Harness View:

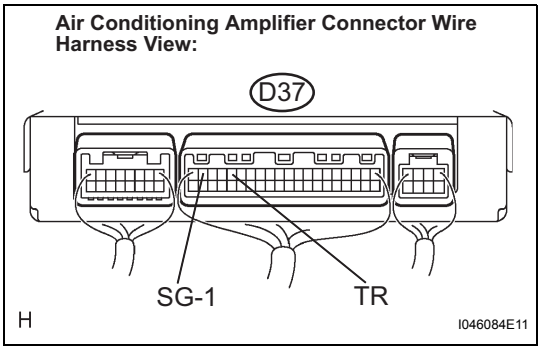

(a) Remove the A/C amplifier with connectors still connected.

(b) Turn the ignition switch on (IG)

(c) Measure the voltage according to the value(s) in the table below.

Voltage

Tester connection	Condition	Specified condition
D37-16 (TR) - D37-19 (SG-1)	Ignition switch on (IG) at 25°C (77°F)	1.8 to 2.2 V
D37-16 (TR) - D37-19 (SG-1)	Ignition switch on (IG) at 40°C (104°F)	1.2 to 1.6 V

HINT:

As the temperature increases, the voltage decreases.

Result

Result	Proceed to
NG	A
OK (Checking from the PROBLEM SYMPTOM TABLE)	B
OK (Checking from the DTC)	C

B → **PROCEED TO NEXT CIRCUIT INSPECTION SHOWN IN PROBLEM SYMPTOMS TABLE**

C → **REPLACE AIR CONDITIONING AMPLIFIER ASSEMBLY**

A

AC

3	INSPECT A/C ROOM TEMPERATURE SENSOR

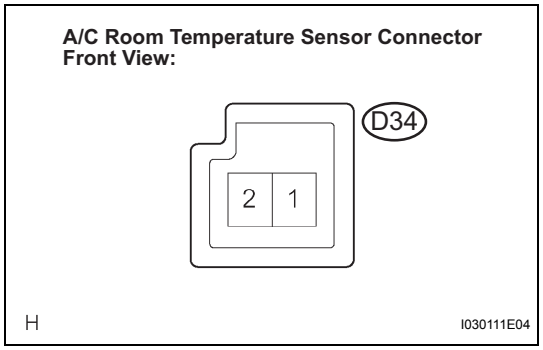

(a) Remove the A/C room temperature sensor.

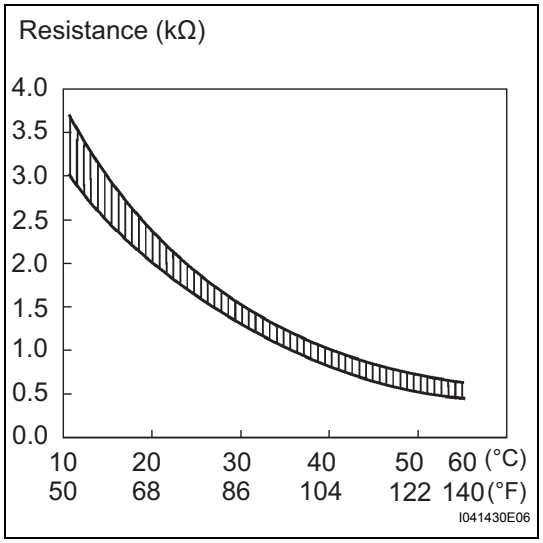

(b) Measure the resistance according to the value(s) in the table below.

Resistance

Tester connection	Condition	Specified condition
D34-1 - D34-2	10°C (50°F)	3.00 to 3.73 kΩ
D34-1 - D34-2	15°C (59°F)	2.45 to 2.88 kΩ
D34-1 - D34-2	20°C (68°F)	1.95 to 2.30 kΩ
D34-1 - D34-2	25°C (77°F)	1.60 to 1.80 kΩ
D34-1 - D34-2	30°C (86°F)	1.28 to 1.47 kΩ
D34-1 - D34-2	35°C (95°F)	1.00 to 1.22 kΩ
D34-1 - D34-2	40°C (104°F)	0.80 to 1.00 kΩ
D34-1 - D34-2	45°C (113°F)	0.65 to 0.85 kΩ
D34-1 - D34-2	50°C (122°F)	0.50 to 0.70 kΩ
D34-1 - D34-2	55°C (131°F)	0.44 to 0.60 kΩ
D34-1 - D34-2	60°C (140°F)	0.36 to 0.50 kΩ

NOTICE:

- **Only hold the sensor at its connector. Touching the sensor may change the resistance value.**
- **When measuring, the sensor temperature must be the same as the ambient temperature.**

HINT:

As the temperature increases, the resistance decreases (See the graph).

NG → **REPLACE A/C ROOM TEMPERATURE SENSOR**

OK

4	CHECK HARNESS AND CONNECTOR (A/C ROOM TEMPERATURE SENSOR - AIR CONDITIONING AMPLIFIER)

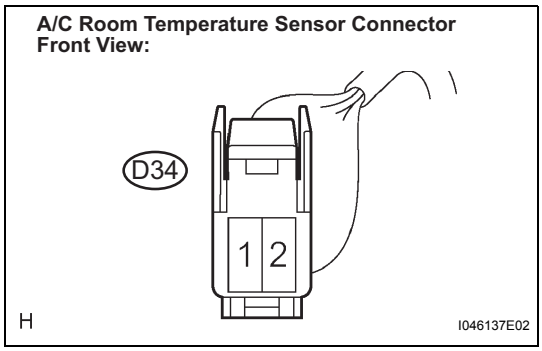

(a) Disconnect the connector from A/C room temperature sensor.

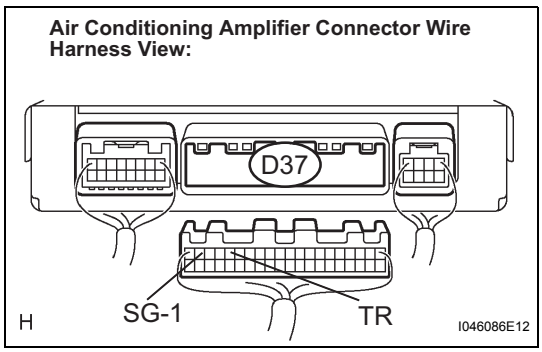

(b) Disconnect the connector from A/C amplifier.
(c) Measure the resistance according to the value(s) in the table below.

Resistance

Tester connection	Condition	Specified condition
D37-16 (TR) - D34-1	Always	Below 1 Ω
D37-19 (SG-1) - D34-2	Always	Below 1 Ω
D37-16 (TR) - Body ground	Always	10 kΩ or higher
D37-19 (SG-1) - Body ground	Always	10 kΩ or higher

NG → **REPAIR OR REPLACE HARNESS OR CONNECTOR**

OK

REPLACE AIR CONDITIONING AMPLIFIER ASSEMBLY

ROOM TEMPERATURE SENSOR

ON-VEHICLE INSPECTION

1. INSPECT A/C ROOM TEMPERATURE SENSOR

(a) Remove the A/C room temperature sensor.

(b) Disconnect the connector from the A/C room temperature sensor.

(c) Measure the resistance according to the value(s) in the table below.

Resistance

Tester connection	Condition	Specified condition
1 - 2	10°C (50°F)	3.00 to 3.73 kΩ
1 - 2	15°C (59°F)	2.45 to 2.88 kΩ
1 - 2	20°C (68°F)	1.95 to 2.30 kΩ
1 - 2	25°C (77°F)	1.60 to 1.80 kΩ
1 - 2	30°C (86°F)	1.28 to 1.47 kΩ
1 - 2	35°C (95°F)	1.00 to 1.22 kΩ
1 - 2	40°C (104°F)	0.80 to 1.00 kΩ
1 - 2	45°C (113°F)	0.65 to 0.85 kΩ
1 - 2	50°C (122°F)	0.50 to 0.70 kΩ
1 - 2	55°C (131°F)	0.44 to 0.60 kΩ
1 - 2	60°C (140°F)	0.36 to 0.50 kΩ

A/C Room Temperature Sensor Connector Front View:

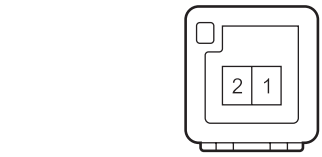

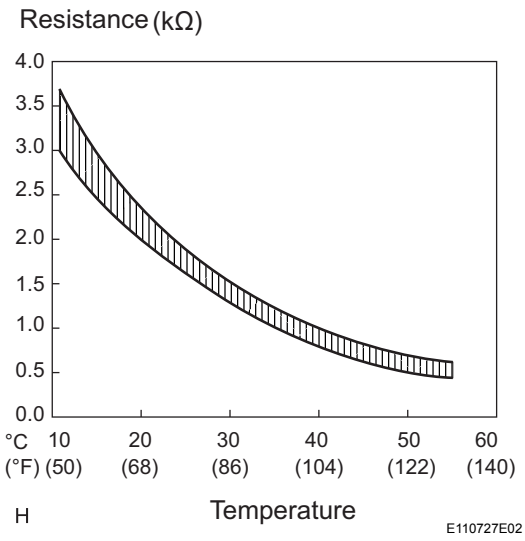

NOTICE:

- **Even slightly touching the sensor may change the resistance value. Be sure to hold the connector of the sensor.**
- **When measuring, the sensor temperature must be the same as the ambient temperature.**

HINT:

As the temperature increases, the resistance decreases (See the graph).

If the resistance value is not as specified, replace the sensor.

REASSEMBLY

1. INSTALL AIR CONDITIONING CONTROL ASSEMBLY

INSTALLATION

1. **INSTALL INSTRUMENT CLUSTER FINISH PANEL SUB-ASSEMBLY CENTER**
2. **INSTALL INSTRUMENT PANEL SUB-ASSEMBLY**
3. **INSTALL INSTRUMENT CLUSTER FINISH PANEL GARNISH NO.2**
4. **CONNECT BATTERY NEGATIVE TERMINAL**
5. **PERFORM SYSTEM INITIALIZE**
   (a) Some systems need initialization when disconnecting the cable from the negative battery terminal.
   HINT:
   See page IN-29.

REASSEMBLY

1. INSTALL TEMPERATURE CONTROL SWITCH ASSEMBLY

INSTALLATION

1. **INSTALL INSTRUMENT CLUSTER FINISH PANEL SUB-ASSEMBLY CENTER**
2. **INSTALL INSTRUMENT PANEL SUB-ASSEMBLY**
3. **INSTALL INSTRUMENT CLUSTER FINISH PANEL GARNISH NO. 2**
4. **CONNECT CABLE TO NEGATIVE BATTERY TERMINAL**
5. **PERFORM SYSTEM INITIALIZE**
   (a) Some systems need initialization when disconnecting the cable from the negative battery terminal.

AMBIENT TEMPERATURE SENSOR

ON-VEHICLE INSPECTION

1. INSPECT A/C ROOM TEMPERATURE SENSOR

(a) Remove the A/C room temperature sensor.

(b) Disconnect the connector from the A/C room temperature sensor.

(c) Measure the resistance according to the value(s) in the table below.

A/C Ambient Temperature Sensor Connector Front View:

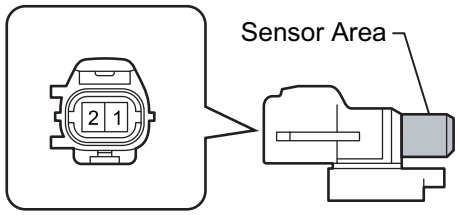

H

E108917E07

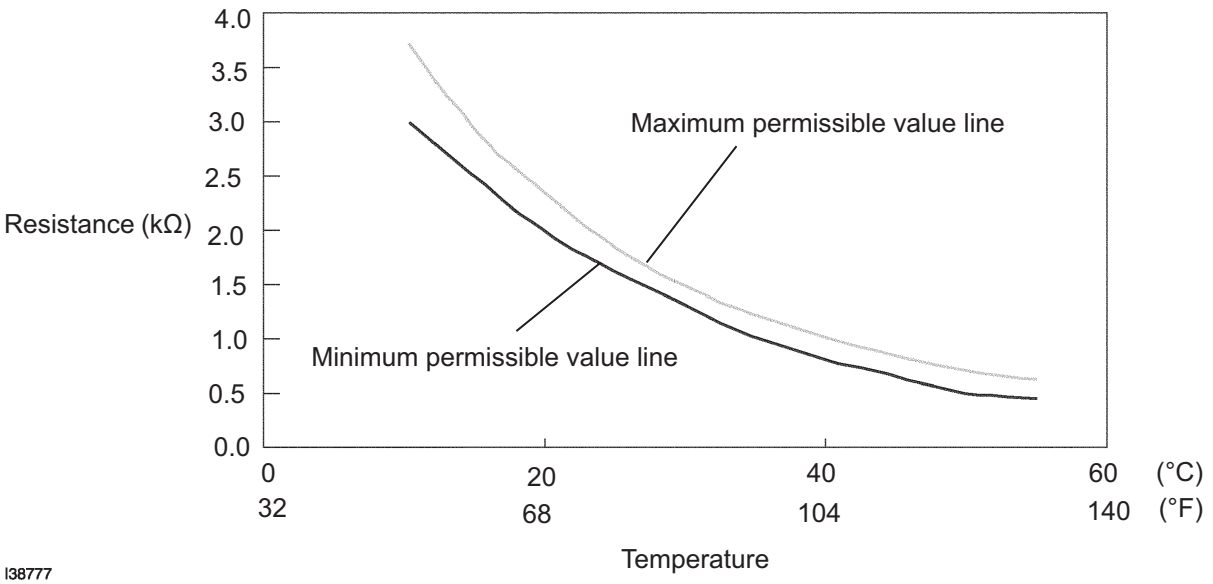

I38777

H

I040673E07

Resistance

Tester connection	Condition	Specified condition
1 - 2	10°C (50°F)	3.00 to 3.73 kΩ
1 - 2	15°C (59°F)	2.45 to 2.88 kΩ
1 - 2	20°C (68°F)	1.95 to 2.30 kΩ
1 - 2	25°C (77°F)	1.60 to 1.80 kΩ
1 - 2	30°C (86°F)	1.28 to 1.47 kΩ
1 - 2	35°C (95°F)	1.00 to 1.22 kΩ

Tester connection	Condition	Specified condition
1 - 2	40°C (104°F)	0.80 to 1.00 kΩ
1 - 2	45°C (113°F)	0.65 to 0.85 kΩ
1 - 2	50°C (122°F)	0.50 to 0.70 kΩ
1 - 2	55°C (131°F)	0.44 to 0.60 kΩ
1 - 2	60°C (140°F)	0.36 to 0.50 kΩ

NOTICE:

- **Even slightly touching the sensor may change the resistance value. Be sure to hold the connector of the sensor.**
- **When measuring, the sensor temperature must be the same as the ambient temperature.**

HINT:

As the temperature increases, the resistance decreases (See the graph).

If the resistance value is not as specified, replace the sensor.

REMOVAL

HINT:
Installation is in the reverse order of removal.

1. **DISCONNECT BATTERY NEGATIVE TERMINAL**
   (a) Wait for 90 seconds after disconnecting the cable to prevent the airbag working.
2. **REMOVE INSTRUMENT PANEL UNDER COVER SUB-ASSEMBLY NO.2 (See page IP-11)**
3. **REMOVE INSTRUMENT PANEL FINISH LOWER PANEL RH (See page IP-11)**
4. **REMOVE AIR CONDITIONING AMPLIFIER ASSEMBLY**
   (a) Disconnect the connector.
   (b) Remove the 2 screws and air conditioning amplifier assembly.

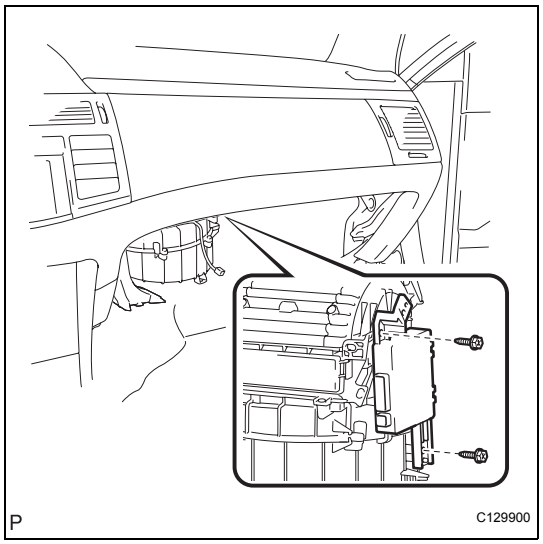

INSTALLATION

1. CONNECT BATTERY NEGATIVE TERMINAL

2. PERFORM SYSTEM INITIALIZE

(a) Some systems need initialization when disconnecting the cable from the negative battery terminal.
HINT:
See page IN-29.

EVAPORATOR TEMPERATURE SENSOR

ON-VEHICLE INSPECTION

1. INSPECT A/C EVAPORATOR TEMPERATURE SENSOR

(a) Remove the A/C evaporator temperature sensor (A/C thermistor).

(b) Disconnect the connector from the A/C evaporator temperature sensor (A/C thermistor).

(c) Measure the resistance according to the value(s) in the table below.

A/C Evaporator Temprature Sensor (A/C Thermistor) Connector Front View:

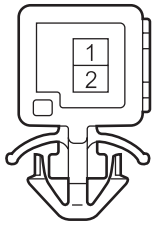

H

E112577E05

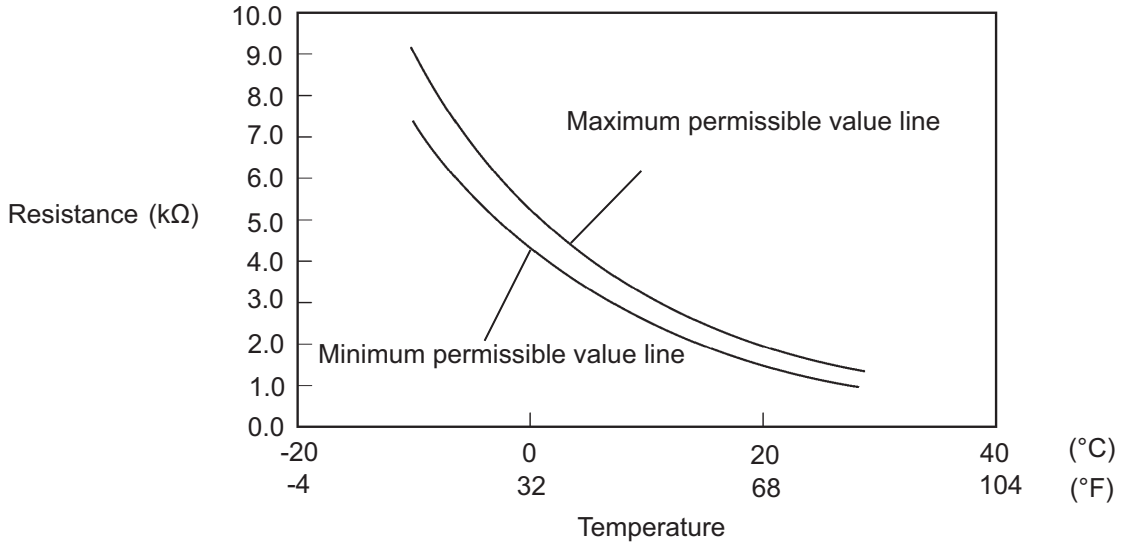

C

I036421E02

Resistance

Tester connection	Condition	Specified condition
1 - 2	-10°C (14°F)	7.30 to 9.10 kΩ
1 - 2	-5°C (23°F)	5.65 to 6.95 kΩ
1 - 2	0°C (32°F)	4.40 to 5.35 kΩ
1 - 2	5°C (41°F)	3.40 to 4.15 kΩ

AC

Tester connection	Condition	Specified condition
1 - 2	10°C (50°F)	2.70 to 3.25 kΩ
1 - 2	15°C (59°F)	2.14 to 2.58 kΩ
1 - 2	20°C (68°F)	1.71 to 2.05 kΩ
1 - 2	25°C (77°F)	1.38 to 1.64 kΩ
1 - 2	30°C (86°F)	1.11 to 1.32 kΩ

NOTICE:

- **Even slightly touching the sensor may change the resistance value. Be sure to hold the connector of the sensor.**
- **When measuring, the sensor temperature must be the same as the ambient temperature.**

HINT:

As the temperature increases, the resistance decreases (See the graph).

If the resistance value is not as specified, replace the sensor.

AIR CONDITIONING PRESSURE SENSOR

ON-VEHICLE INSPECTION

1. INSPECT A/C PRESSURE SENSOR

(a) Start the engine.

(b) Operate the air conditioning system.

(c) Disconnect the connector from A/C pressure sensor.

(d) Install the manifold gauge set (See page AC-134).

(e) Connect the positive (+) lead from the three 1.5 V dry cell batteries to terminal 3 and negative (-) lead to terminal 1.

(f) Check the voltage between terminals 2 and 1 of A/C pressure sensor.

Voltage:

The voltage depends on the refrigerant pressure as shown in the chart.

If the voltage is not as specified, replace the sensor.

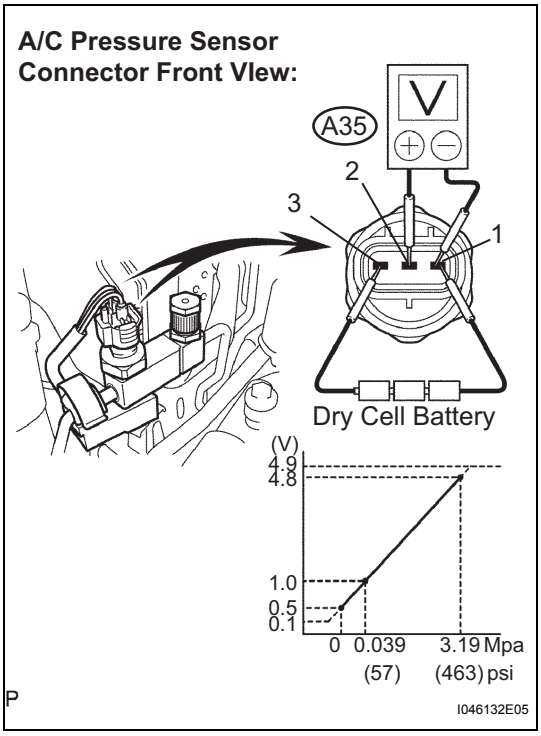

AIR CONDITIONING CONTROL ASSEMBLY

COMPONENTS

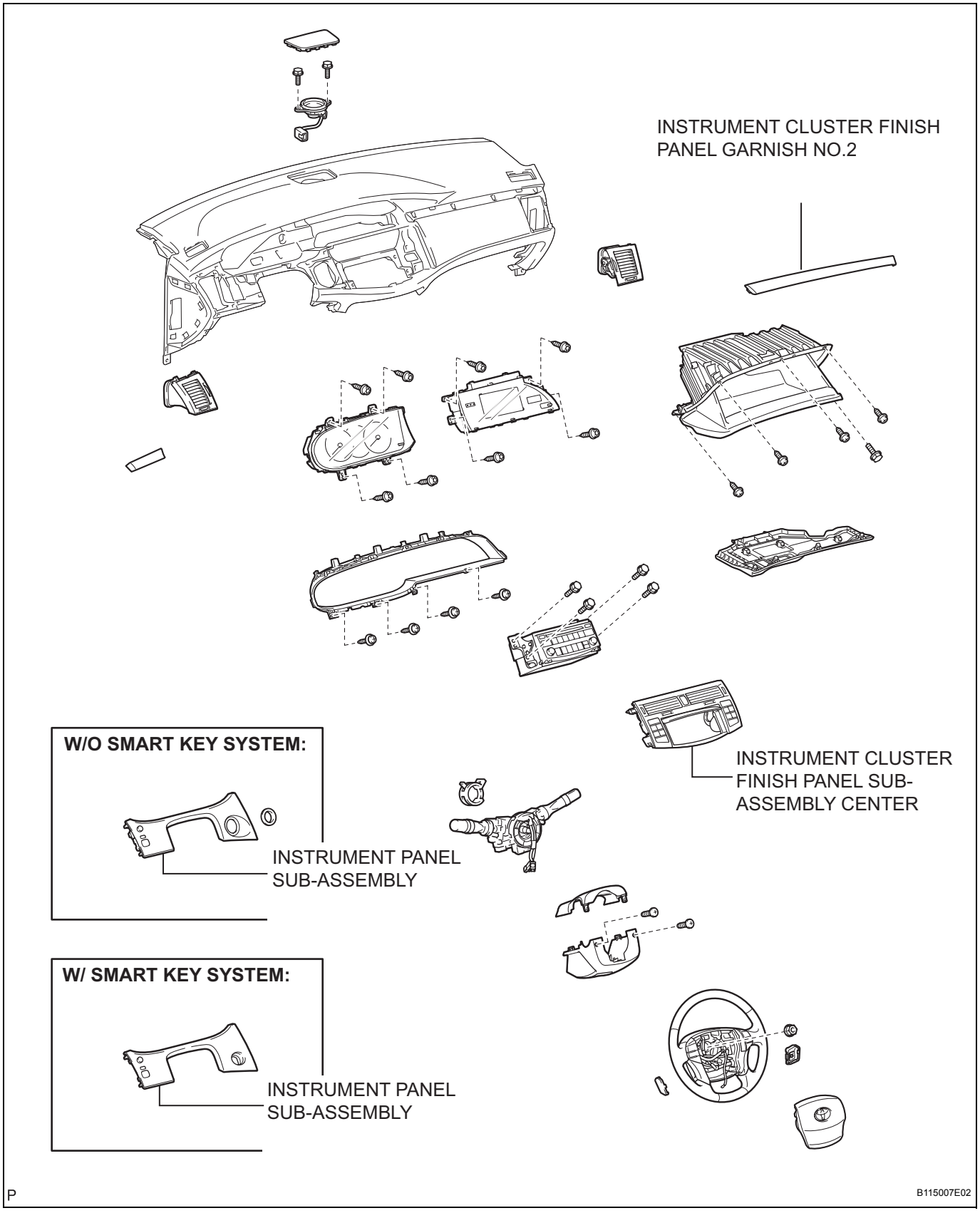

AC

REMOVAL

HINT:
Installation is in the reverse order of removal.

1. **DISCONNECT BATTERY NEGATIVE TERMINAL**
   (a) Wait for 90 seconds after disconnecting the cable to prevent the airbag working.
2. **REMOVE INSTRUMENT CLUSTER FINISH PANEL GARNISH NO.2 (See page IP-9)**
3. **REMOVE INSTRUMENT PANEL SUB-ASSEMBLY (See page IP-9)**
4. **REMOVE INSTRUMENT CLUSTER FINISH PANEL SUB-ASSEMBLY CENTER**
   (a) Release the 8 claws and 5 clips and instrument cluster finish panel sub-assembly center.
   (b) Disconnect the connector and remove the instrument cluster finish panel sub-assembly center.

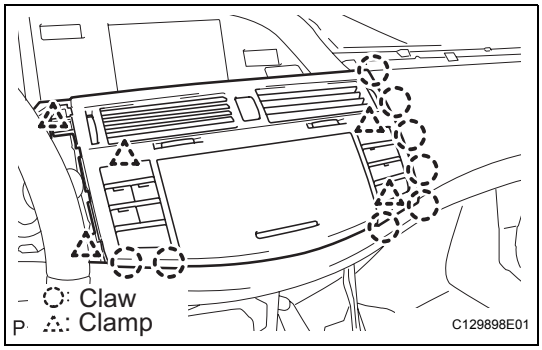

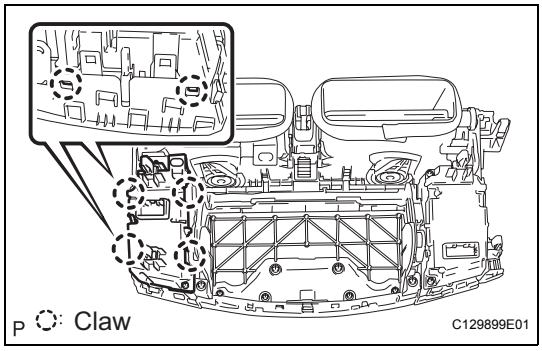

DISASSEMBLY

1. **REMOVE AIR CONDITIONING CONTROL ASSEMBLY**
   (a) Release the 4 claws and remove the air conditioning control assembly.

TEMPERATURE CONTROL SWITCH

COMPONENTS

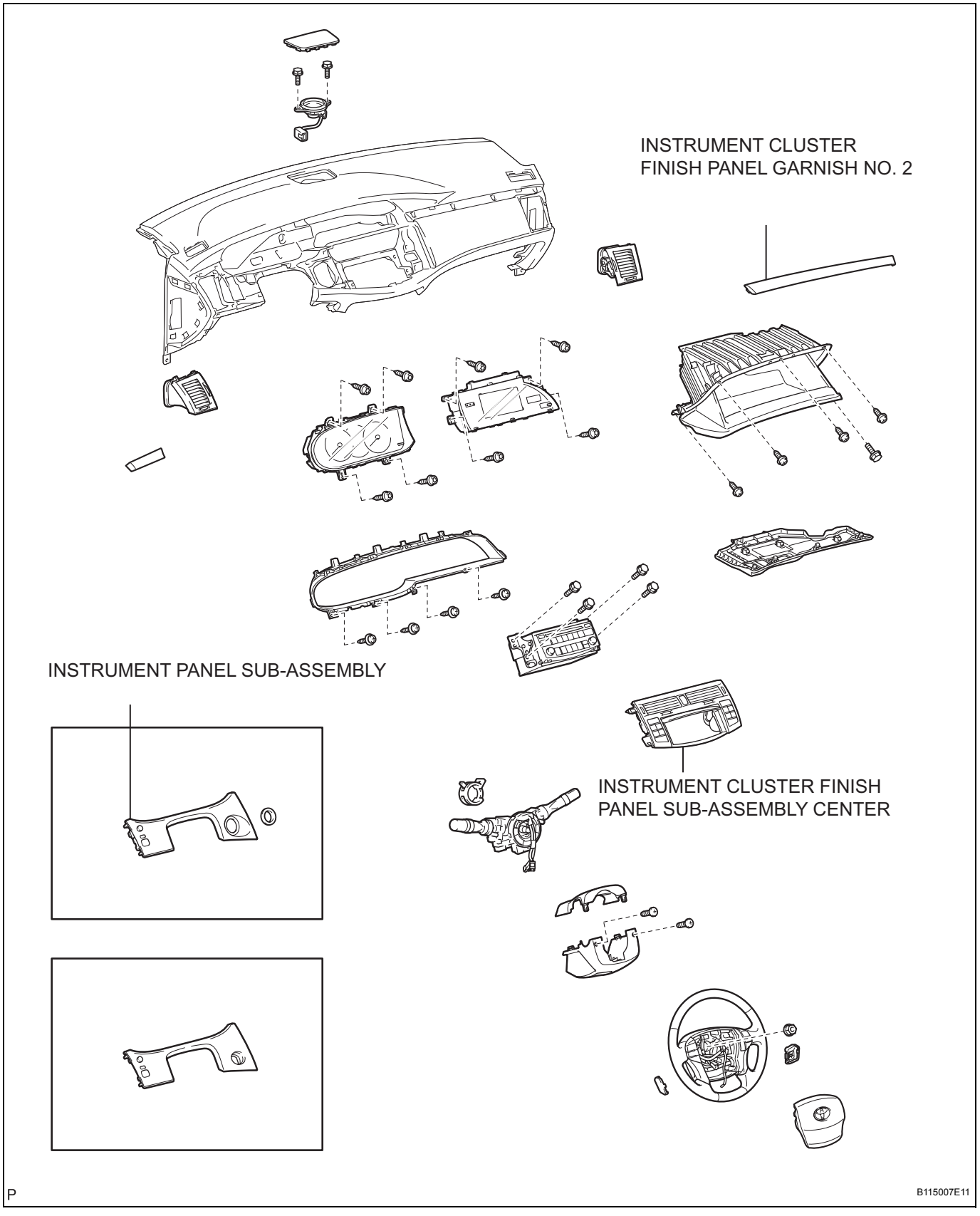

AC

REMOVAL

HINT:
Installation is in the reverse order of removal.

1. **DISCONNECT CABLE FROM NEGATIVE BATTERY TERMINAL**
   (a) Wait for 90 seconds after disconnecting the cable to prevent the airbag working.
2. **REMOVE INSTRUMENT CLUSTER FINISH PANEL GARNISH NO. 2 (See page IP-9)**
3. **REMOVE INSTRUMENT PANEL SUB-ASSEMBLY (See page IP-9)**
4. **REMOVE INSTRUMENT CLUSTER FINISH PANEL SUB-ASSEMBLY CENTER**
   (a) Release the 8 claws and 5 clips and instrument cluster finish panel sub-assembly center.
   (b) Disconnect the connector and remove the instrument cluster finish panel sub-assembly center.

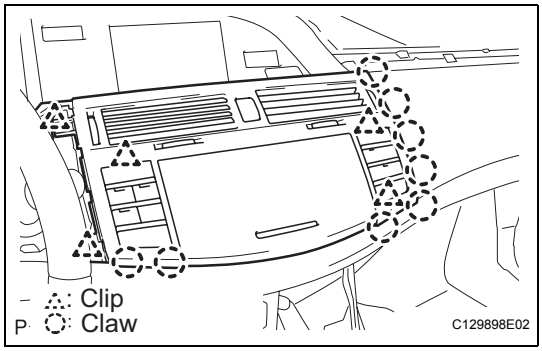

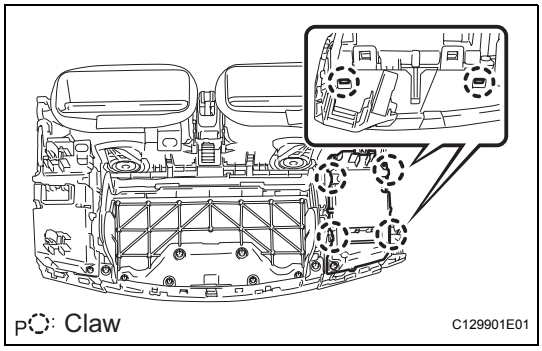

DISASSEMBLY

1. **REMOVE TEMPERATURE CONTROL SWITCH ASSEMBLY**
   (a) Release the 4 claws and remove the temperature control switch assembly.

AIR CONDITIONING AMPLIFIER

COMPONENTS

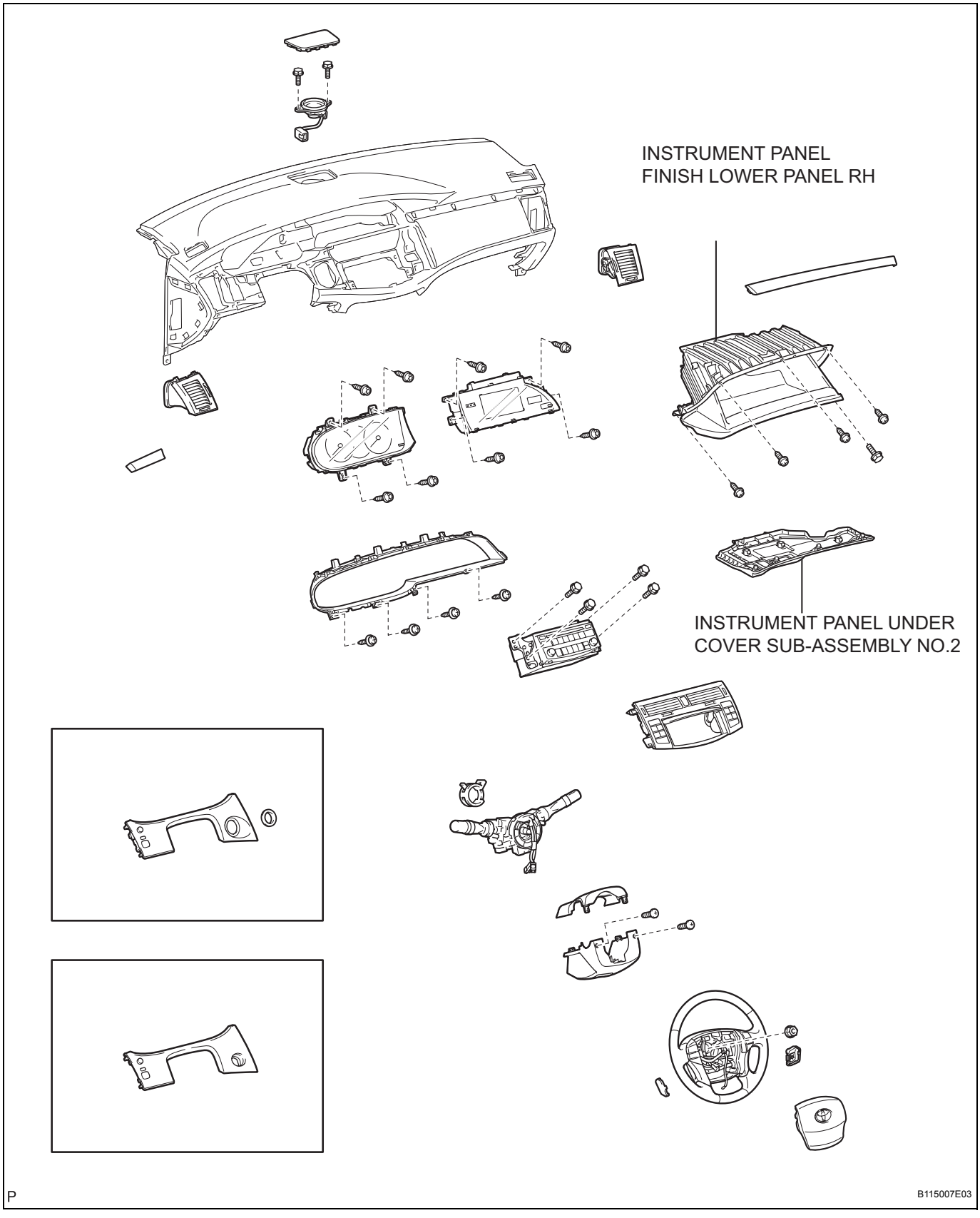

AC

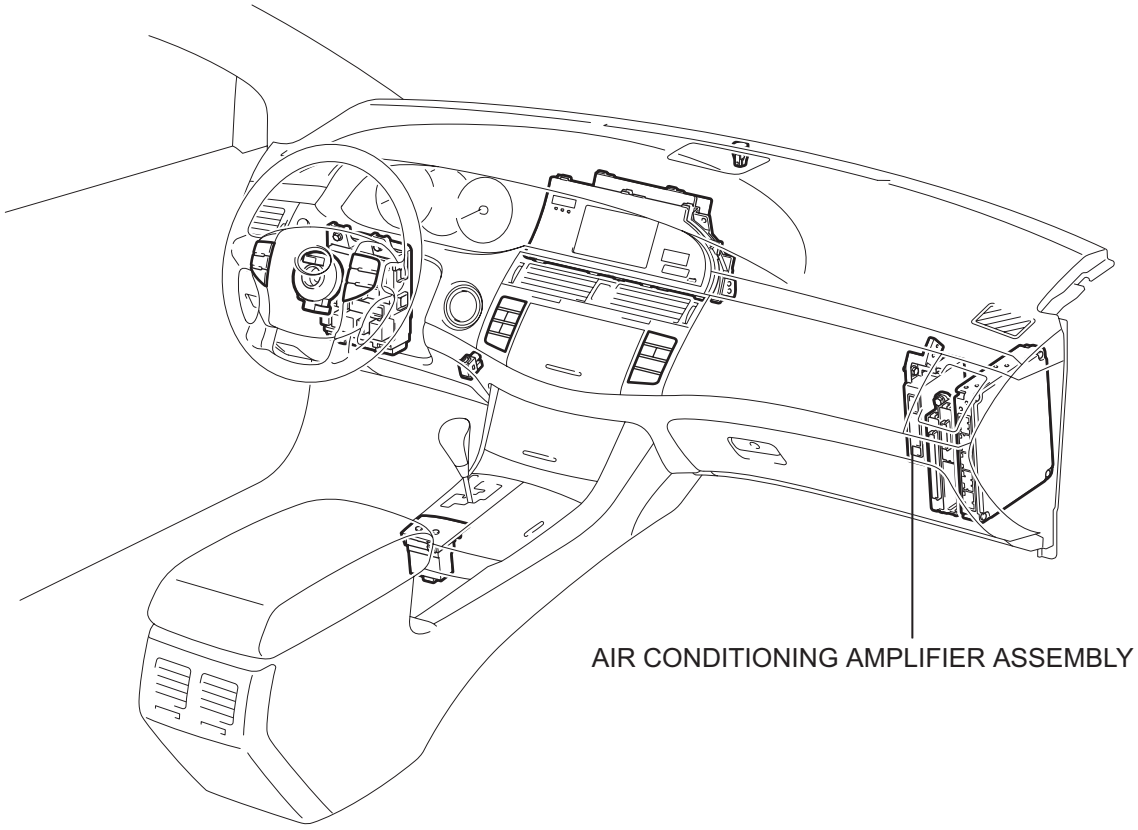

P

C114912E01

AUDIO AND VISUAL SYSTEM

PRECAUTION

1. INITIALIZATION

NOTICE:
When disconnecting the negative (-) battery terminal, initialize the following systems after the terminal is reconnected.

System Name	See procedure
Power Window Control	IN-29
Sliding Roof System	

2. EXPRESSIONS OF IGNITION SWITCH

The type of ignition switch used on this model differs according to the specifications of the vehicle.
The expressions listed in the table below are used in this section.

Switch Type / Expression	Ignition Switch (position)	Engine Switch (condition)
Ignition Switch off	LOCK	Off
Ignition Switch on (IG)	ON	On (IG)
Ignition Switch on (ACC)	ACC	On (ACC)
Engine Start	START	Start

F053330E01

3. HANDLING AND OPERATIONAL PRECAUTIONS

(a) Explain to the customer that when the negative terminal is disconnected from the battery, the AM/FM channel presets in the radio receiver are cleared. If necessary, make a note of the recorded channel information before the negative terminal is disconnected, then reset the information after the negative terminal is reconnected.

(b) The removal / installation of the radio receiver or tape player should be performed after all cassette tapes and audio CDs are ejected from the radio receiver or tape player.
HINT:
If a cassette tape, audio CD, or map disc cannot be ejected due to a malfunction in the radio receiver, do not attempt to remove it forcefully. Bring the vehicle to a repair center.

(c) Fasten the ground bolt securely when the antenna cord is removed or installed.
HINT:
Failure to fasten the ground bolt securely causes noise when receiving radio waves.

(d) Do not touch the cone paper of the speaker.

PARTS LOCATION

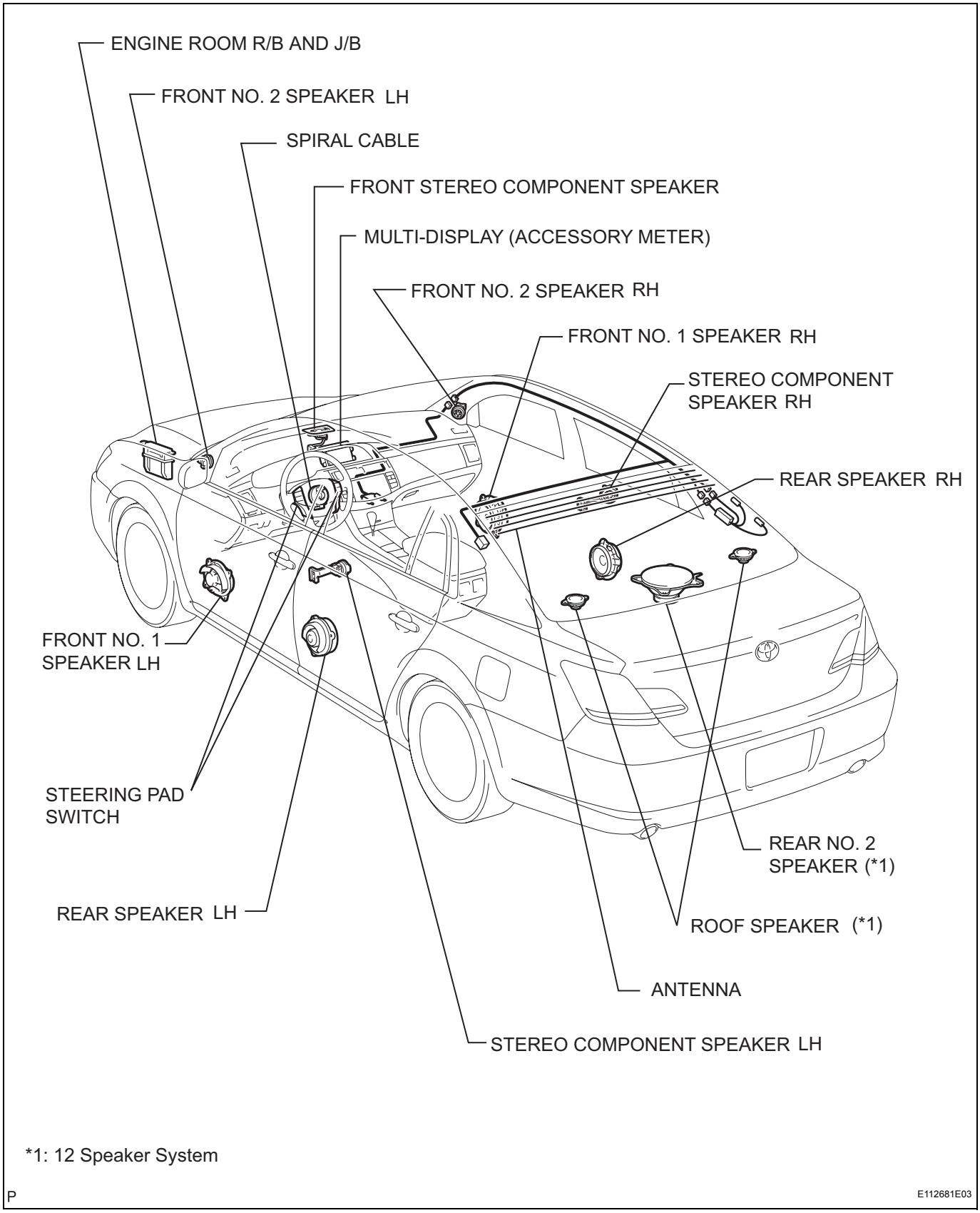

*1: 12 Speaker System

P

E112681E03

AV

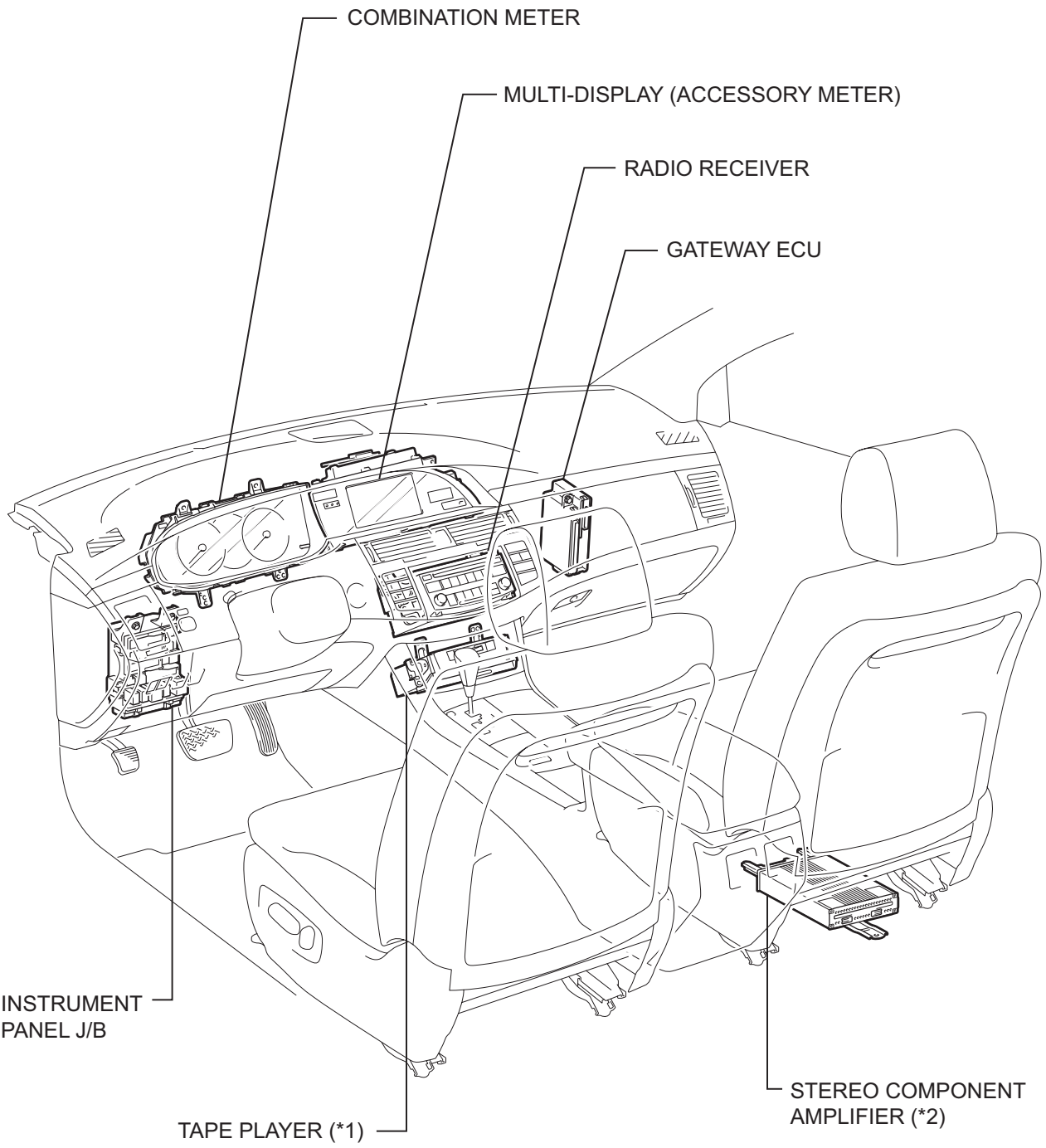

*1: with Tape Player

*2: 12 Speaker System

P

E112682E03

SYSTEM DIAGRAM

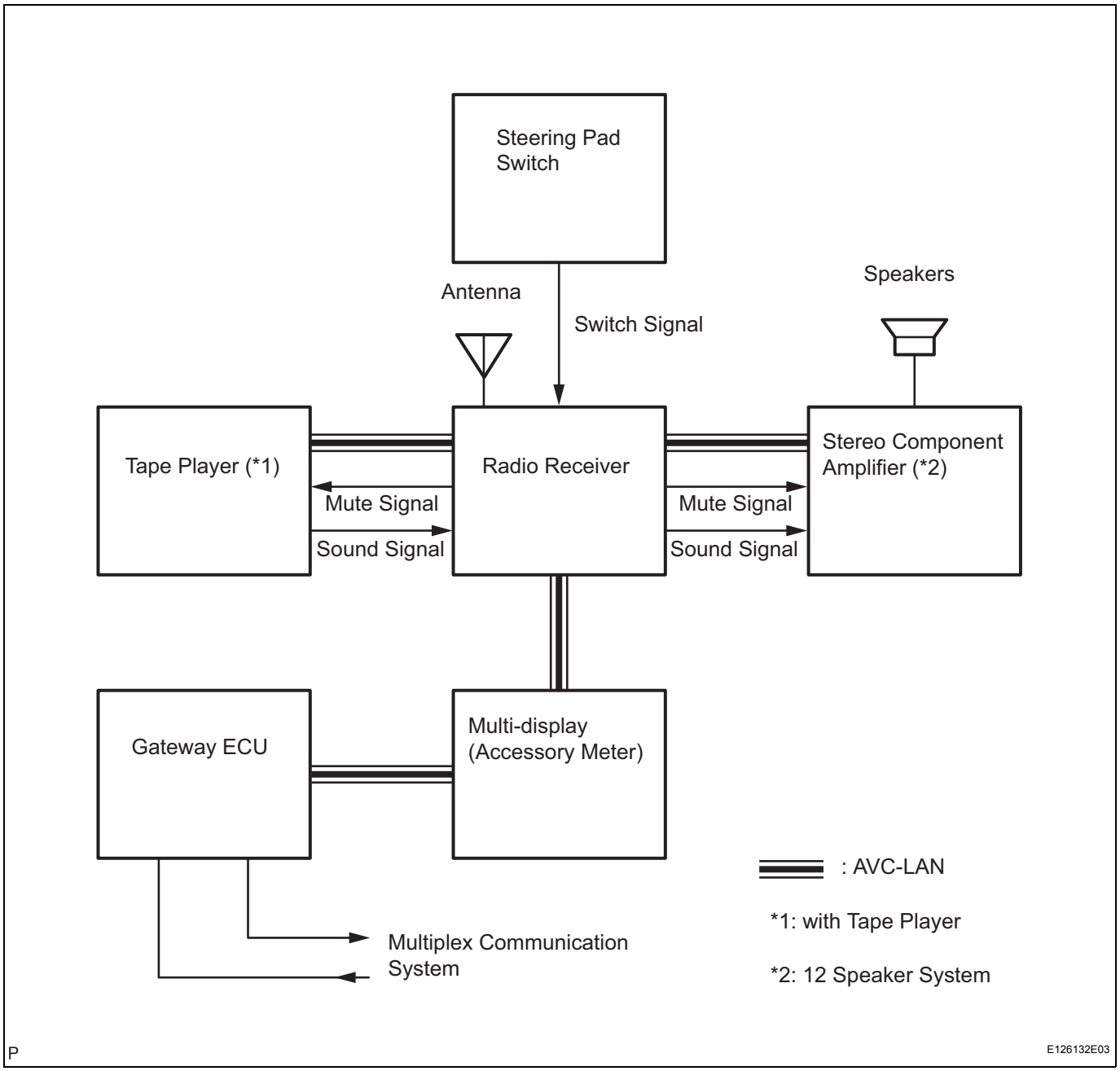

AV

SYSTEM DESCRIPTION

1. DISC PLAYER OUTLINE

(a) A compact disc player or digital versatile disc player uses a laser pickup to read digital signals recorded on compact discs (CDs). By converting the digital signals to analog, music and other things can be played.

CAUTION:
Do not look directly at the laser pickup because the CD player uses an invisible laser beam. Be sure to operate the player only as instructed.
NOTICE:
- **Do not disassemble any part of the CD player.**
- **Do not apply oil to the CD player.**
- **Do not insert anything but a CD into the CD player.**

2. AVC-LAN DESCRIPTION

(a) What is AVC-LAN?

Example:

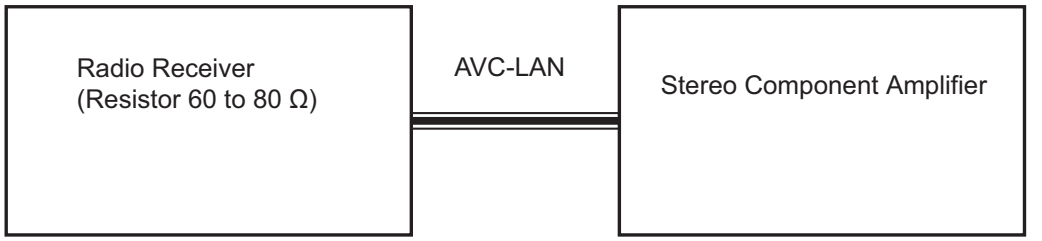

T

I100319E09

AVC-LAN, an abbreviation for "Audio Visual Communication Local Area Network", is a united standard developed by the manufacturers in affiliation with Toyota Motor Corporation. This standard pertains to audio and visual signals as well as switch and communication signals.

(b) Purpose:
Recently, car audio systems have rapidly developed and the functions have vastly changed. The conventional car audio system is being integrated with multi-media interfaces similar to those in navigation systems. At the same time, customers are demanding higher quality from their audio systems. This is merely an overview of the standardization background. The specific purposes are as follows:

(1) To solve sound problems, etc., caused by using components of different manufacturers through signal standardization.

(2) To allow each manufacturer to concentrate on developing products they do best. From this, reasonably priced products can be produced.
HINT:
- If a short to +B or short to ground is detected in the AVC-LAN circuit, communication is interrupted and the audio system will stop functioning.
- If an audio system is equipped with a navigation system, the multi-display unit acts as the master unit. If the navigation system is not equipped, the audio head unit acts as the master unit instead. If the radio and navigation assembly is equipped, it is the master unit.
- The radio receiver provides resistance to make communication possible.
- The car audio system with an AVC-LAN circuit has a diagnostic function.
- Each component has a specified number (3-digit) called a physical address. Each function has a number (2-digit) called a logical address.

3. COMMUNICATION SYSTEM OUTLINE

(a) Components of the audio system communicate with each other via the AVC-LAN.

(b) The master component of the AVC-LAN is a radio receiver with a 60 to 80 Ω resistor. This is essential for communication.

(c) If a short circuit or open circuit occurs in the AVC-LAN circuit, communication is interrupted and the audio system will stop functioning.

4. DIAGNOSTIC FUNCTION OUTLINE

(a) The audio system has a diagnostic function (the result is indicated on the master unit).

(b) A 3-digit hexadecimal component code (physical address) is allocated to each component on the AVC-LAN. Using this code, the component in the diagnostic function can be displayed.

HOW TO PROCEED WITH TROUBLESHOOTING

1	**VEHICLE BROUGHT TO WORKSHOP**

NEXT

2	**INSPECT BATTERY VOLTAGE**

Standard voltage:
11 to 14 V
If the voltage is below 11 V, recharge or replace the battery before proceeding.

NEXT

AV

3	**INSPECT COMMUNICATION FUNCTION OF LARGE-SCALE MULTIPLEX COMMUNICATION SYSTEM (BEAN)**

(a) Using the intelligent tester, check if the Multiplex Communication System (MPX) is functioning normally.
Result

Result	Proceed to
MPX DTC is not output	A
MPX DTC is output	B

B → **Go to MULTIPLEX COMMUNICATION SYSTEM**

A

4	**BASIC INSPECTION**

(a) Turn the ignition switch on (IG).
(b) Check whether or not the radio receiver and multi-display (accessory meter) turn on.
Result

Result	Proceed to
Radio receiver and multi-display (accessory meter) turn on	A
Radio receiver and multi-display (accessory meter) do not turn on	B

B → **Go to step 7**

A

5	CHECK FOR DTC

(a) Check for DTCs and note any codes that are output.
(b) Delete the DTCs.
(c) Recheck by simulating the operation indicated by the DTC.
HINT:
- If the system cannot enter the diagnosis mode, inspect each AVC-LAN communication signal and repair or replace the problem parts.
- Even if the malfunction symptom is not confirmed, check the DTCs. This is because the system stores past DTCs.
- Check and clear past DTCs. Then check for DTCs.

Result

Result	Proceed to
DTC is output again	A
DTC is not output	B

B → **Go to step 7**

A

6	DIAGNOSTIC TROUBLE CODE CHART

Find the output code on the diagnostic trouble code chart (See page AV-25).

NEXT

Go to step 9

7	PROBLEM SYMPTOMS TABLE

Refer to the problem symptoms table (See page AV-11).

Result

Result	Proceed to
Fault is not listed in problem symptoms table	A
Fault is listed in problem symptoms table	B

B → **Go to step 9**

A

8	OVERALL ANALYSIS AND TROUBLESHOOTING

(a) Terminals of ECU (See page AV-13).

AV

NEXT

9	**ADJUST, REPAIR OR REPLACE**

NEXT

10	**CONFIRMATION TEST**

NEXT

END

IDENTIFICATION OF NOISE SOURCE

1. Radio Description

(a) Radio frequency band

(1) Radio broadcasts use the radio frequency bands shown in the table below.

Frequency	30 kHz	300 kHz	30 MHz	30 MHz	300 MHz
Designation	LF	MF	HF	VHF	
Radio Wave		AM ⟷		FM ⟷	
Modulation	Amplitude modulation			Frequency modulation	

LF: Low Frequency MF: Medium Frequency HF: High Frequency VHF: Very High Frequency

E108734E01

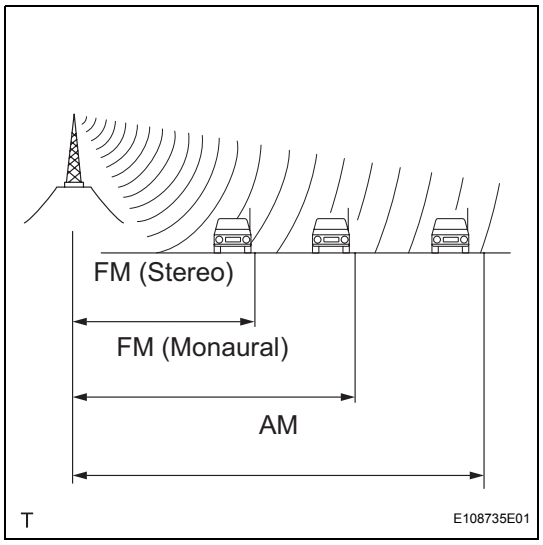

(b) Service area

(1) The service areas of AM and FM broadcasts are vastly different. Sometimes an AM broadcast can be received very clearly but an FM stereo cannot. FM stereo has the smallest service area, and is prone to pick up static and other types of interference such as noise.

(c) Radio reception problems

HINT:

In addition to static, other problems such as "phasing", "multipath", and "fade out" exist. These problems are not caused by electrical noise, but by the radio signal propagation method itself.

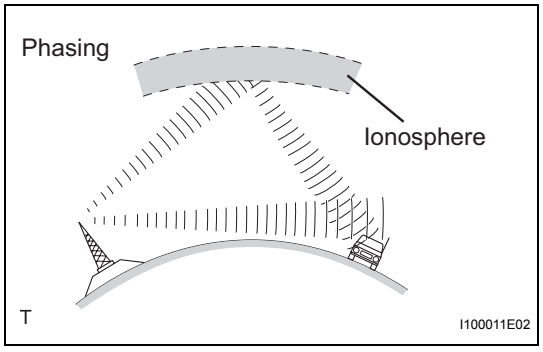

(1) Phasing

AM broadcasts are susceptible to electrical interference and another kind of interference called phasing. Occurring only at night, phasing is the interference created when a vehicle receives 2 radio wave signals from the same transmitter. One signal is reflected off the ionosphere and the other signal is received directly from the transmitter.

AV

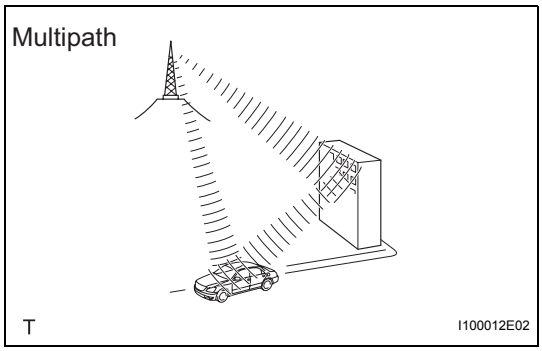

(2) Multipath
Multipath is a type of interference created when a vehicle receives 2 radio wave signals from the same transmitter. One signal is reflected off buildings or mountains and the other signal is received directly from the transmitter.

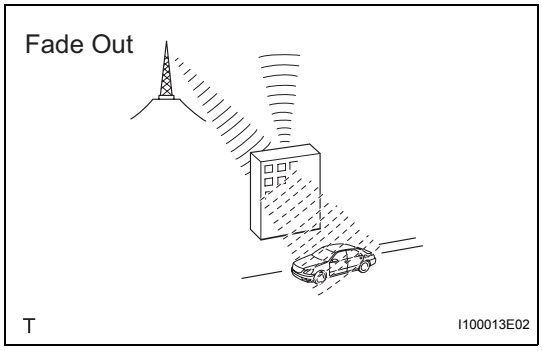

(3) Fade out
Fade out is caused by objects (buildings, mountains, and other large obstacles) that deflect away part of a signal, resulting in a weaker signal when the object is between the transmitter and vehicle. High frequency radio waves, such as FM broadcasts, are easily deflected by obstructions. Low frequency radio waves, such as AM broadcasts, are much more difficult to deflect.

(d) Noise problem
Technicians must have a clear understanding about each customer's noise complaint. Use the following table to diagnose noise problems.

Radio Frequency	Noise Occurrence Condition	Presumable Cause
AM	Noise occurs in a specified area	Foreign noise
AM	Noise occurs when listening to an intermittent broadcast	An identical program transmitted from multiple towers can cause noise where the signals overlap
AM	Noise occurs only at night	Music beat from a distant broadcast
FM	Noise occurs while driving in a specified area	Multipath or phasing noise resulting from a change in FM frequency

HINT:
If the noise does not match the examples above, refer to the descriptions about phasing and multipath.

PROBLEM SYMPTOMS TABLE

HINT:

- Before performing verification listed in the table below, check the fuse and relay.
- Methods used to verify the cause of the problem are listed in order of probability in the suspected area column.

Audio function:

Symptom	Suspected area	See page
Pressing power switch does not turn on system.	1. "Pressing Power Switch does not Turn on System"	AV-72
	2. Multi-display Power Source Circuit	AV-151
	3. Radio Receiver Power Source Circuit	AV-147
	4. Multi-display	IP-8
	5. Radio Receiver	AV-159
Panel switch does not function.	1. Steering Pad Switch Circuit	AV-88
	2. Radio Receiver	AV-159
No sound can be heard from speakers.	1. "No Sound can be Heard from Speakers"	AV-73
	2. Mute Signal Circuit between Radio Receiver and Stereo Component Amplifier (*1)	AV-114
	3. Sound Signal Circuit between Radio Receiver and Stereo Component Amplifier (*1)	AV-109
	4. Speaker Circuit	AV-100
	5. Stereo Component Amplifier Power Source Circuit (*1)	AV-149
	6. Stereo Component Amplifier (*1)	AV-166
	7. Radio Receiver	AV-159
Radio broadcast cannot be received or poor reception.	"Radio Broadcast cannot be Received or Poor Reception"	AV-82
CD cannot be inserted / played or CD is ejected right after insertion.	1. "CD cannot be Inserted / Played or CD is Ejected Right After Insertion"	AV-78
	2. Radio Receiver Power Source Circuit	AV-147
	3. Radio Receiver	AV-159
CD cannot be ejected.	1. "CD cannot be Ejected"	AV-77
	2. Radio Receiver Power Source Circuit	AV-147
	3. Radio Receiver	AV-159
Noise occurs.	1. "Noise Occurs"	AV-70
	2. Mute Signal Circuit between Radio Receiver and Stereo Component Amplifier (*1)	AV-114
	3. Stereo Component Amplifier Power Source Circuit (*1)	AV-149
	4. Stereo Component Amplifier (*1)	AV-166
	5. Radio Receiver	AV-159
CD sound skips.	1. "CD Sound Skips"	AV-80
	2. Radio Receiver	AV-159
Poor sound quality in all modes (low volume).	1. "Poor Sound Quality in All Modes (Low Volume)"	AV-87
	2. Mute Signal Circuit between Radio Receiver and Stereo Component Amplifier (*1)	AV-114
	3. Stereo Component Amplifier Power Source Circuit (*1)	AV-149
	4. Radio Receiver Power Source Circuit	AV-147
	5. Stereo Component Amplifier (*1)	AV-166
	6. Radio Receiver	AV-159

*1: 12 Speaker

Tape player function:

Symptom	Suspected area	See page
No sound can be heard from speakers (tape player) (*1)	1. Mute Signal Circuit between Radio Receiver and Tape Player	AV-116
	2. Sound Signal Circuit between Radio Receiver and Tape Player	AV-111
	3. Tape Player Power Source Circuit	AV-155
	4. Tape Player	AV-196
	5. Radio Receiver	AV-159
Cassette tape cannot be inserted or played. (*1)	1. "Cassette Tape cannot be Inserted or Played"	AV-76
	2. Tape Player	AV-196
Cassette tape cannot be ejected. (*1)	1. "Cassette Tape cannot be Ejected"	AV-75
	2. Tape Player	AV-196
Sound quality is bad only when playing tape. (*1)	"Sound Quality is Bad Only when Playing Tape"	AV-85
Tape is tangled due to incorrect tape speed or auto-reverse malfunction. (*1)	"Tape is Tangled due to Incorrect Tape Speed or Auto-Reverse Malfunction"	AV-86

*1: Tape Player

Steering pad switch function:

AV

Symptom	Suspected area	See page
The system cannot be operated by the steering pad switch.	1. Steering Pad Switch Circuit	AV-88
	2. Radio Receiver	AV-159
Illumination for steering pad switch does not come on when light control switch is turned to TAIL or HEAD.	Illumination circuit	AV-92

Others:

Symptom	Suspected area	See page
Radio receiver does not illuminate at night (when the light control switch is turned to TAIL or HEAD).	Illumination circuit	AV-92

TERMINALS OF ECU

1. RADIO RECEIVER (9 SPEAKER)

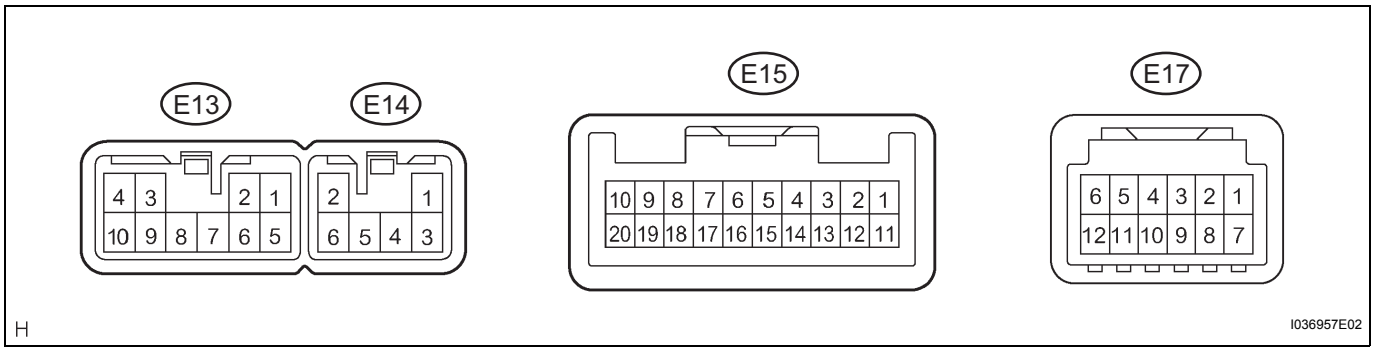

Symbols (Terminal No.)	Wiring Color	Terminal Description	Condition	Specification
FR+ (E13-1) - GND (E13-7)	LG - BR	Sound signal (Front Right)	Audio system is playing	A waveform synchronized with sounds is output
FL+ (E13-2) - GND (E13-7)	P - BR	Sound signal (Front Left)	Audio system is playing	A waveform synchronized with sounds is output
ACC (E13-3) - GND (E13-7)	Y - BR	Accessory (ON)	Turn ignition switch off → on (ACC)	Below 1 V → 10 to 14 V
B (E13-4) - GND (E13-7)	R - BR	Battery	Always	10 to 14 V
FR- (E13-5) - GND (E13-7)	L - BR	Sound signal (Front Right)	Audio system is playing	A waveform synchronized with sounds is output
FL- (E13-6) - GND (E13-7)	V - BR	Sound signal (Front Left)	Audio system is playing	A waveform synchronized with sounds is output
GND (E13-7) - Body ground	BR - Body ground	Ground	Always	Below 1 V
ANT (E13-8) - GND (E13-7)	B - BR	Power source of antenna	Radio is ON	10 to 14 V
ILL+ (E13-10) - GND (E13-7)	G - BR	Illumination signal	Light control switch OFF → TAIL or ON	Below 1 V → 10 to 14 V
RR+ (E14-1) - GND (E13-7)	R - BR	Sound signal (Rear Right)	Audio system is playing	A waveform synchronized with sounds is output
RL+ (E14-2) - GND (E13-7)	Y - BR	Sound signal (Rear Left)	Audio system is playing	A waveform synchronized with sounds is output
RR- (E14-3) - GND (E13-7)	W - BR	Sound signal (Rear Right)	Audio system is playing	A waveform synchronized with sounds is output
ILL- (E14-5) - GND (E13-7)	LG - BR	Illumination signal	Light control switch OFF → TAIL or ON	Below 1 V → Pulse generation
RL- (E14-6) - GND (E13-7)	B - BR	Sound signal (Rear Left)	Audio system is playing	A waveform synchronized with sounds is output
TX+ (E15-9) - GND (E13-7)	Y - BR	AVC-LAN communication signal	Turn ignition switch on (ACC)	2 to 3 V
TX- (E15-10) - GND (E13-7)	B - BR	AVC-LAN communication signal	Turn ignition switch on (ACC)	2 to 3 V
GND (E15-6) -Body ground	B - Body ground	Steering pad switch ground	Always	Below 1 V
1CH (E15-7) - GND (E13-7)	O - BR	Steering pad switch signal	Steering pad switch not operated → SEEK+ switch pushed → SEEK- switch pushed → VOL+ switch pushed → VOL- switch pushed	4 V or more → Approx 0.5 V → Approx 0.9 V → Approx 2.0 V → Approx 3.4 V
2CH (E15-8) - GND (E13-7)	V - BR	Steering pad switch signal	Steering pad switch not operated → MODE switch pushed	4 V or more → Approx 2.5 V
CSLD (E17-1) - Body ground	Shielded - Body ground	Ground	Always	Below 1 V

AV

Symbols (Terminal No.)	Wiring Color	Terminal Description	Condition	Specification
CDR+ (E17-2) - GND (E13-7)	W - BR	Sound signal (Right)	Tape player is playing	A waveform synchronized with sounds is output
CDR- (E17-3) - GND (E13-7)	B - BR	Sound signal (Right)	Tape player is playing	A waveform synchronized with sounds is output
CDL+ (E17-4) - GND (E13-7)	G - BR	Sound signal (Left)	Tape player is playing	A waveform synchronized with sounds is output
CDL- (E17-5) - GND (E13-7)	R - BR	Sound signal (Left)	Tape player is playing	A waveform synchronized with sounds is output
MUTE (E17-6) - GND (E13-7)	W - BR	Mute signal	Audio system is playing → Changing mode	Above 3.5 V → Below 1 V
TXM+ (E17-9) - GND (E13-7)	R - BR	AVC-LAN communication signal	Turn ignition switch on (ACC)	2 to 3 V
TXM- (E17-10) - GND (E13-7)	W - BR	AVC-LAN communication signal	Turn ignition switch on (ACC)	2 to 3 V

2. RADIO RECEIVER (12 SPEAKER)

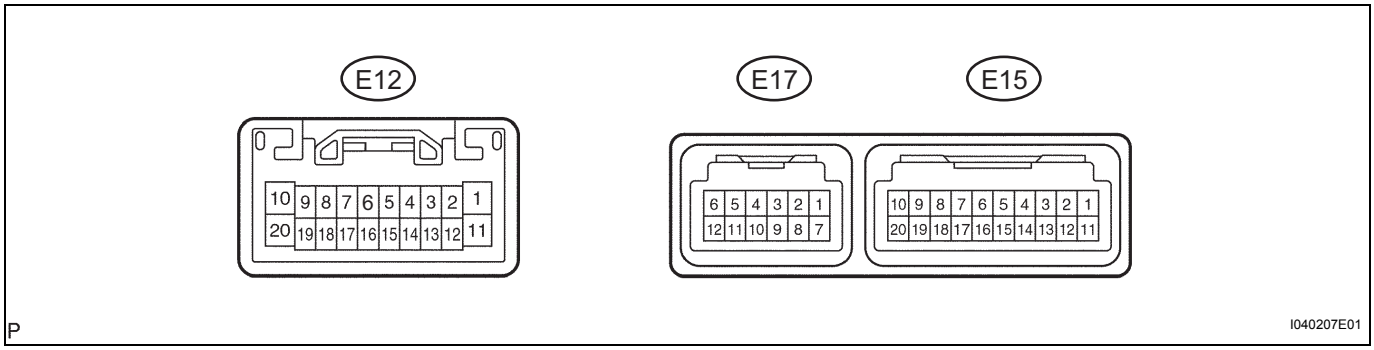

Symbols (Terminal No.)	Wiring Color	Terminal Description	Condition	Specification
B (E12-1) - GND (E12-20)	R - BR	Battery	Always	10 to 14 V
ILL+ (E12-2) - GND (E12-20)	G - BR	Illumination signal	Light control switch OFF → TAIL or ON	Below 1.0 V → 10 to 14 V
ATX+ (E12-5) - GND (E12-20)	Y - BR	AVC-LAN communication signal	Turn ignition switch on (ACC)	2 to 3 V
MUTE (E12-7) - GND (E12-20)	R - BR	Mute signal	Audio system is playing → Changing mode	Above 3.5 V → Below 1 V
R+ (E12-8) - GND (E12-20)	R - BR	Sound signal (Right)	Audio system is playing	A waveform synchronized with sounds is output
L+ (E12-9) - GND (E12-20)	B - BR	Sound signal (Left)	Audio system is playing	A waveform synchronized with sounds is output
SLD (E12-10) - Body ground	Shielded - Body ground	Ground	Always	Below 1 V
ACC (E12-11) - GND (E12-20)	Y - BR	Accessory (ON)	Turn ignition switch off → on (ACC)	Below 1 V → 10 to 14 V
ILL- (E12-12) - GND (E12-20)	LG - BR	Illumination signal	Light control switch OFF → TAIL or ON	Below 1.0 V → Pulse generation
ANT (E12-13) - GND (E12-20)	B - BR	Antenna	Radio is ON	10 to 14 V
ATX- (E12-15) - GND (E12-20)	BR - BR	AVC-LAN communication signal	Turn ignition switch on (ACC)	2 to 3 V
R- (E12-18) - GND (E12-20)	G - BR	Sound signal (Right)	Audio system is playing	A waveform synchronized with sounds is output
L- (E12-19) - GND (E12-20)	W - BR	Sound signal (Left)	Audio system is playing	A waveform synchronized with sounds is output
GND (E12-20) - Body ground	BR - Body ground	Ground	Always	Below 1 V
TX+ (E15-9) - GND (E12-20)	Y - BR	AVC-LAN communication signal	Turn ignition switch on (ACC)	2 to 3 V
TX- (E15-10) - GND (E12-20)	B - BR	AVC-LAN communication signal	Turn ignition switch on (ACC)	2 to 3 V

Symbols (Terminal No.)	Wiring Color	Terminal Description	Condition	Specification
GND (E15-6) -Body ground	B - Body ground	Steering pad switch ground	Always	Below 1 V
1CH (E15-7) - GND (E12-20)	O - BR	Steering pad switch signal	Steering pad switch not operated → SEEK+ switch pushed → SEEK- switch pushed → VOL+ switch pushed → VOL- switch pushed	4 V or more → Approx 0.5 V → Approx 0.9 V → Approx 2.0 V → Approx 3.4 V
2CH (E15-8) - GND (E12-20)	V - BR	Steering pad switch signal	Steering pad switch not operated → MODE switch pushed	4 V or more → Approx 2.5 V
CSLD (E17-1) - Body ground	Shielded - Body ground	Ground	Always	Below 1 V
CDR+ (E17-2) - GND (E12-20)	W - BR	Sound signal (Right)	Tape player is playing	A waveform synchronized with sounds is output
CDR- (E17-3) - GND (E12-20)	B - BR	Sound signal (Right)	Tape player is playing	A waveform synchronized with sounds is output
CDL+ (E17-4) - GND (E12-20)	G - BR	Sound signal (Left)	Tape player is playing	A waveform synchronized with sounds is output
CDL- (E17-5) - GND (E12-20)	R - BR	Sound signal (Left)	Tape player is playing	A waveform synchronized with sounds is output
MUTE (E17-6) - GND (E12-20)	W - BR	Mute signal	Audio system is playing → Changing mode	Above 3.5 V → Below 1 V
TXM+ (E17-9) - GND (E12-20)	R - BR	AVC-LAN communication signal	Turn ignition switch on (ACC)	2 to 3 V
TXM- (E17-10) - GND (E12-20)	W - BR	AVC-LAN communication signal	Turn ignition switch on (ACC)	2 to 3 V

AV

3. STEREO COMPONENT AMPLIFIER (12 SPEAKER)

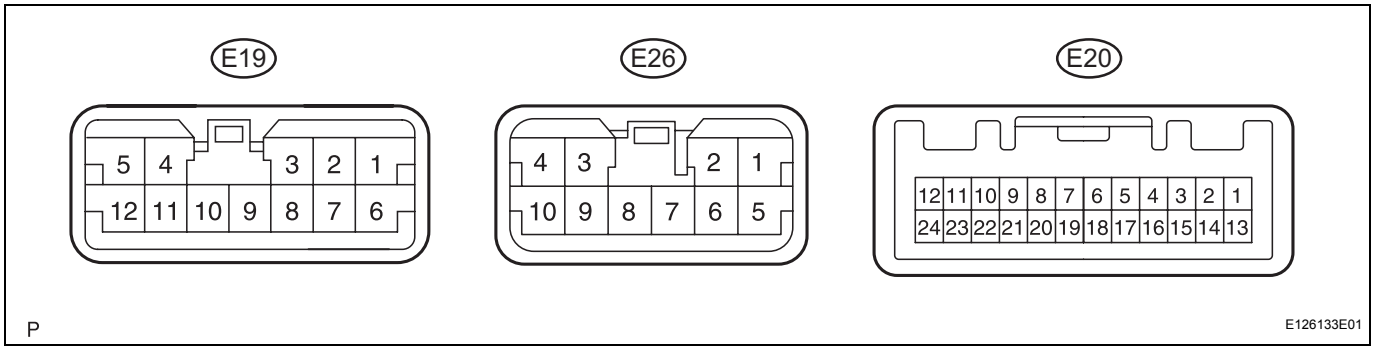

Symbols (Terminal No.)	Wiring Color	Terminal Description	Condition	Specification
FL- (E19-1) - GND (E19-6)	V - W-B	Sound signal (Front Right)	Audio system is playing	A waveform synchronized with sounds is output
FL+ (E19-2) - GND (E19-6)	P - W-B	Sound signal (Front Left)	Audio system is playing	A waveform synchronized with sounds is output
FR- (E19-3) - GND (E19-6)	L - W-B	Sound signal (Front Right)	Audio system is playing	A waveform synchronized with sounds is output
SL+ (E19-4) - GND (E19-6)	LG - W-B	Sound signal (Surround Left)	Audio system is playing	A waveform synchronized with sounds is output
WF1+ (E19-5) - GND (E19-6)	GR - W-B	Sound signal (Woofer)	Audio system is playing	A waveform synchronized with sounds is output
GND (E19-6) - Body ground	W-B - Body ground	Ground	Always	Below 1 V
GND2 (E19-7) - Body ground	W-B - Body ground	Ground	Always	Below 1 V
FR+ (E19-9) - GND (E19-6)	LG - W-B	Sound signal (Front Right)	Audio system is playing	A waveform synchronized with sounds is output
SL- (E19-10) - GND (E19-6)	L - W-B	Sound signal (Surround Left)	Audio system is playing	A waveform synchronized with sounds is output

Symbols (Terminal No.)	Wiring Color	Terminal Description	Condition	Specification
WF1- (E19-12) - GND (E19-6)	W - W-B	Sound signal (Woofer)	Audio system is playing	A waveform synchronized with sounds is output
MUTE (E20-1) - GND (E19-6)	R - W-B	Mute signal	Audio system is playing → Changing mode	Above 3.5 V → Below 1 V
L- (E20-2) - GND (E19-6)	W - W-B	Sound signal from radio receiver (Left)	Audio system is playing	A waveform synchronized with sounds is output
L+ (E20-3) - GND (E19-6)	B - W-B	Sound signal from radio receiver (Left)	Audio system is playing	A waveform synchronized with sounds is output
R- (E20-4) - GND (E19-6)	G - W-B	Sound signal from radio receiver (Right)	Audio system is playing	A waveform synchronized with sounds is output
R+ (E20-5) - GND (E19-6)	R - W-B	Sound signal from radio receiver (Right)	Audio system is playing	A waveform synchronized with sounds is output
TX- (E20-7) - GND (E19-6)	BR - W-B	AVC-LAN communication signal	Turn ignition switch on (ACC)	2 to 3 V
TX+ (E20-8) - GND (E19-6)	Y - W-B	AVC-LAN communication signal	Turn ignition switch on (ACC)	2 to 3 V
ACC (E20-12) - GND (E19-6)	Y - W-B	Accessory (ON)	Turn ignition switch off → on (ACC)	Below 1 V → 10 to 14 V
+B (E26-1) - GND (E19-6)	L - W-B	Battery	Always	10 to 14 V
SR+ (E26-2) - GND (E19-6)	BR - W-B	Sound signal (Surround Right)	Audio system is playing	A waveform synchronized with sounds is output
RL+ (E26-3) - GND (E19-6)	Y - W-B	Sound signal (Rear Left)	Audio system is playing	A waveform synchronized with sounds is output
RR- (E26-4) - GND (E19-6)	W - W-B	Sound signal (Rear Right)	Audio system is playing	A waveform synchronized with sounds is output
+B2 (E26-5) - GND (E19-6)	L - W-B	Battery	Always	10 to 14 V
SR- (E26-6) - GND (E19-6)	G - W-B	Sound signal (Surround Right)	Audio system is playing	A waveform synchronized with sounds is output
CTR- (E26-7) - GND (E19-6)	B - W-B	Sound signal (Center)	Audio system is playing	A waveform synchronized with sounds is output
CTR+ (E26-8) - GND (E19-6)	Y - W-B	Sound signal (Center)	Audio system is playing	A waveform synchronized with sounds is output
RL- (E26-9) - GND (E19-6)	B - W-B	Sound signal (Rear Right)	Audio system is playing	A waveform synchronized with sounds is output
RR+ (E26-10) - GND (E19-6)	R - W-B	Sound signal (Rear Right)	Audio system is playing	A waveform synchronized with sounds is output

AV

4. TAPE PLAYER

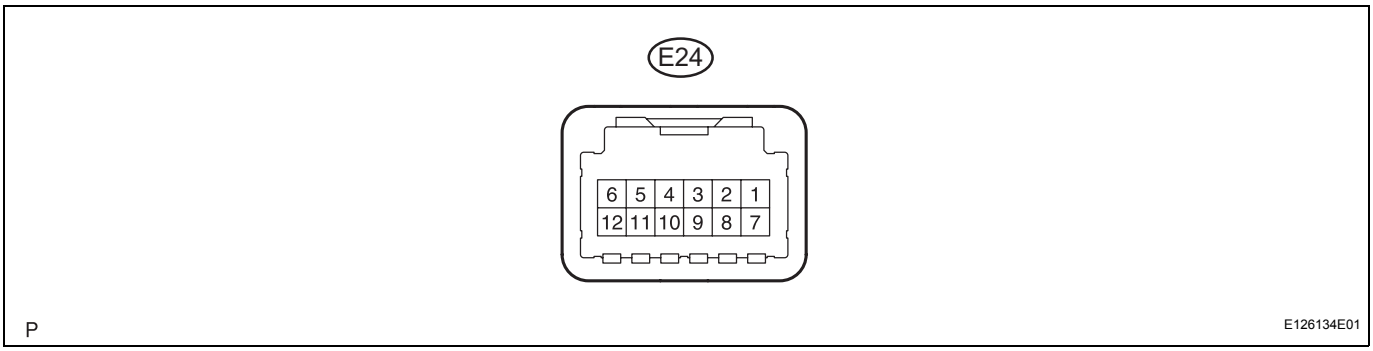

Symbols (Terminal No.)	Wiring Color	Terminal Description	Condition	Specification
SG1 (E24-1) - Body ground	Shielded - Body ground	Ground	Always	Below 1 V
R+ (E24-2) - GND5 (E24-7)	W - W-B	Sound signal (Right)	Tape player is playing	A waveform synchronized with sounds is output
R- (E24-3) - GND5 (E24-7)	B - W-B	Sound signal (Right)	Tape player is playing	A waveform synchronized with sounds is output

Symbols (Terminal No.)	Wiring Color	Terminal Description	Condition	Specification
L+ (E24-4) - GND5 (E24-7)	G - W-B	Sound signal (Left)	Tape player is playing	A waveform synchronized with sounds is output
L- (E24-5) - GND5 (E24-7)	R - W-B	Sound signal (Left)	Tape player is playing	A waveform synchronized with sounds is output
LMUT (E24-6) - GND5 (E24-7)	W - W-B	Mute signal	Audio system is playing → Changing mode	Above 3.5 V → Below 1 V
GND5 (E24-7) - Body ground	W-B - Body ground	Ground	Always	Below 1 V
TX+ (E24-9) - GND5 (E24-7)	R - W-B	AVC-LAN communication signal	Turn ignition switch on (ACC)	2 to 3 V
TX- (E24-10) - GND5 (E24-7)	W - W-B	AVC-LAN communication signal	Turn ignition switch on (ACC)	2 to 3 V
ACC1 (E24-11) - GND5 (E24-7)	Y - W-B	Accessory (ON)	Turn ignition switch off → on (ACC)	Below 1 V → 10 to 14 V
+B (E24-12) - GND5 (E24-7)	R - W-B	Battery	Always	10 to 14 V

5. GATEWAY ECU

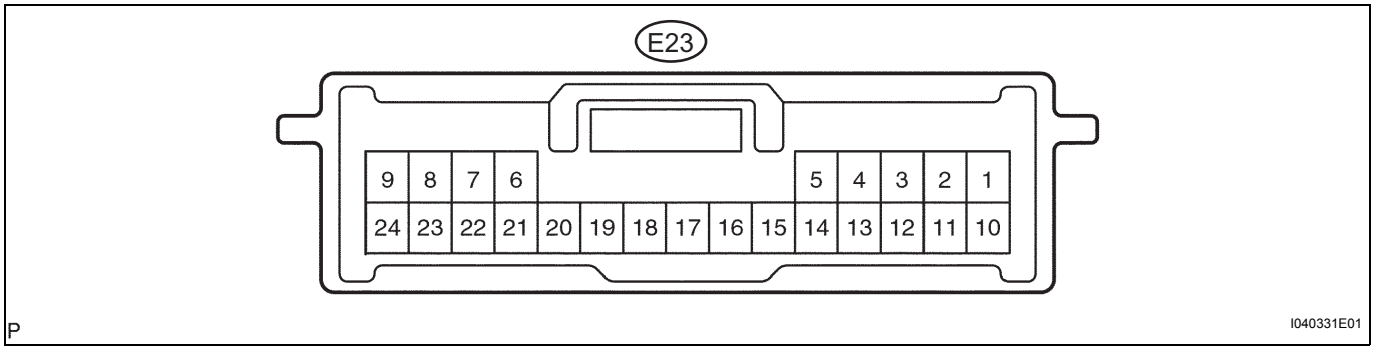

Symbols (Terminal No.)	Wiring Color	Terminal Description	Condition	Specification
IG (E23-1) - GND (E23-24)	W - W-B	Ignition switch on (IG)	Always	10 to 14 V
ACC (E23-2) - GND (E23-24)	R - W-B	Accessory (ON)	Turn ignition switch off → on (ACC)	Below 1 V → 10 to 14 V
GTX+ (E23-6) - GND (E23-24)	BR - W-B	AVC-LAN communication signal	Turn ignition switch on (ACC)	2 to 3 V
BATT (E23-10) - GND (E23-24)	B - W-B	Battery	Always	10 to 14 V
GTX- (E23-21) - GND (E23-24)	R - W-B	AVC-LAN communication signal	Turn ignition switch on (ACC)	2 to 3 V
GND (E23-24) - Body ground	W-B - Body ground	Ground	Always	Below 1 V

6. MULTI-DISPLAY (ACCESSORY METER) (See page ME-20)

AV

DTC CHECK / CLEAR

HINT:
If the system cannot enter the diagnosis mode, inspect all AVC-LAN communication signals and repair or replace problem parts.
(See page AV-119)

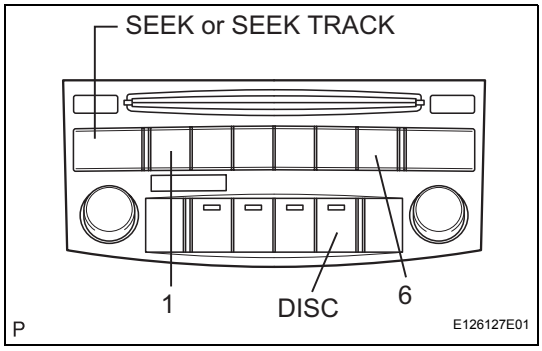

1. STARTING DIAGNOSTIC MODE

(a) Turn the ignition switch on (ACC).
(b) Turn off the audio system.
(c) While pressing the preset switches "1" and "6" at the same time, press the "DISC" 3 times.
HINT:
- When the system enters the diagnostic mode, a beep sound is emitted 3 times and all the elements come on during the SW check mode.
- It takes approximately 40 seconds to complete the check.
- Turn all the elements in the LCD on.
- When pressing the switch, confirm a beep sound is emitted.
- Press the "SEEK TRACK UP" switch to enter the "System Check Screen".

2. FINISHING DIAGNOSTIC MODE

(a) Press the "DISC" for 2 seconds or more, or turn the ignition switch off.

3. CHECK DTC

HINT:
Illustrations may differ from the actual vehicle depending on the device setting and options. Therefore, some detailed areas may not be shown exactly the same as on the actual vehicle.

(a) Reference:
In the system check mode, the system check and the diagnostic memory check are performed, and the check results are displayed in ascending order of the component codes (physical address).

Terms	Meaning
Component code (Physical address)	Three-digit code (in hexadecimal) given to each device comprising AVC-LAN. Corresponding to its function, individual symbol is provided.
Logical address	Two-digit code (in hexadecimal) given to each function and device unit in each device comprising AVC-LAN.

(b) Service check result display.

Display	Original Language	Meaning	Action to be taken
GOOD	Good (normal)	No DTCs are detected in both "System Check Mode" and "Diagnostic Memory Mode".	-
nCon	No connection	The system recognized the component when it was registered, but the component gives no response to the "Diagnostic Mode ON Request".	Check the power source circuit and the communication circuit of the component indicated by the component code (physical address).

Display	Original Language	Meaning	Action to be taken
ECHn	Exchange	One or more DTCs for "Exchange" are detected in either "System Check Mode" or "Diagnostic Memory Mode".	Go to the detailed information mode to check the trouble area referring to the DTC list.
CHEC	Check	When no DTCs are detected for "Exchange", one or more DTCs for "Check" are detected in either "System Check Mode" or "Diagnostic Memory Mode".	Go to the detailed information mode to check the trouble area referring to the DTC list.
OLd	Old version	Old DTC application is identified and DTC is detected in either "System Check Mode" or "Diagnostic Memory Mode".	-
nrES	No response	The device gives no response to any one of "System Check Mode ON Request", "System Check Result Request" and "Diagnostic Memory Request".	Check the power source circuit and the communication circuit of the component indicated by the component code (physical address).

(c) Device name and physical address.

Physical address No.	Name
190	Radio receiver
440	Stereo component amplifier
1C6	Gateway ECU
1D4	Multi-display (Accessory meter)
320	Tape player

(d) Service check mode.

(1) Press the "SEEK TRACK" switch to see the check result of each component.

(2) The component code (physical address) is displayed first, and then the check result follows.
HINT:
- If all check results are "good", the system judges that no DTC exists.
- If the preset switch "1" is pressed in the service check mode, service check is performed again.
- This illustration is only an example and may differ in cases such as for each option part and output DTCs.

AV

Service Check Mode:

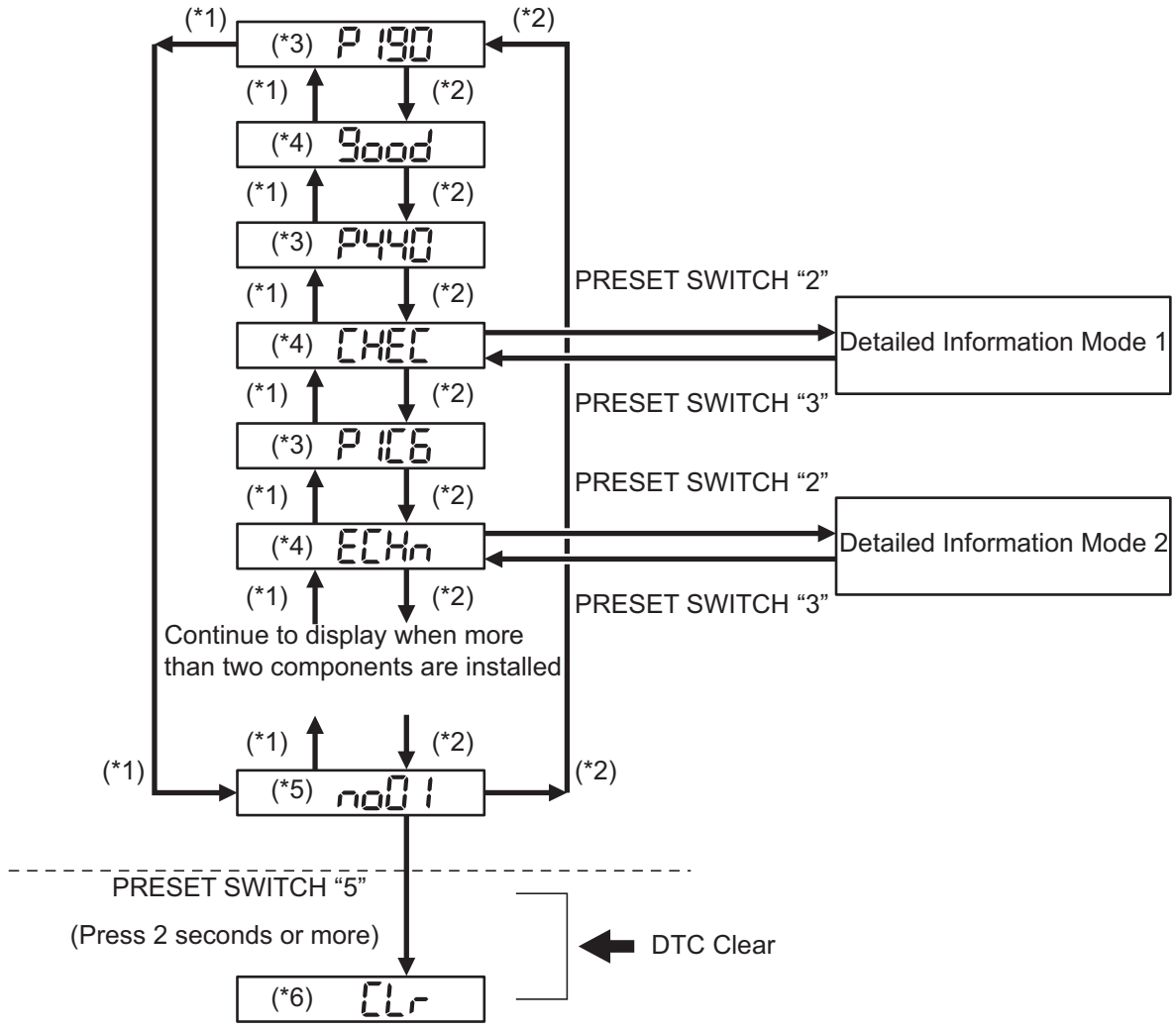

*1: SEEK TRACK DOWN

*2: SEEK TRACK UP

*3: P...Indicates physical address

190/440/1C6...Physical address

*4: Result

*5: Up-to-date connection check number

*6: Memory clear

P

E110920E03

(e) Detailed information mode 1
HINT:

- "Detailed information mode 1" is displayed when there is no response to "System Check Result Request" and DTC is detected only in "Diagnostic Memory Request".
- The component device code (physical address) is displayed first, and then the check result follows.

- This illustration is only an example and may differ in cases such as for each option part and output DTCs.

(1) Press the preset switch "2" to go to the "Detailed Information Mode 1".
(2) Press the "SEEK TRACK" switch to display the physical address and DTC of the component.
(3) Press the preset switch "3" to go to the "Service Check Mode".
(4) Distinguish between the displays of the responses to "System Check Result Request" and "Diagnostic Memory Request". In order to distinguish the information detected in "System Check Mode" and "Diagnostic Memory Mode" in "ECHn", "CHEC", and "old" in "Detailed Information Mode 1", refer to the following:
    - "SyS" is displayed before the detailed codes detected as a result of "System Check Result Request" are displayed.
    - "COdE" is displayed before the detailed codes detected as a result of "Diagnostic Memory Request" are displayed.

    HINT:
    - The response to "System Check Result Request" is the current information given from each ECU as a result of the system check.
    - The response to "Diagnostic Memory Request" contains the information received from each ECU or stored in each ECU in the past.
    - The response to "Diagnostic Memory Request" is the output DTCs as a result of the diagnostic memory check or the DTCs received from each ECU.
    - "System Check Result Request (SyS)" is displayed first, and then the logical address and DTC appear in order.
    - "Diagnostic Memory Request (COdE)" is displayed first, and then the logical address, DTC, sub-code, connection check number, and the number of occurrence appear in order.

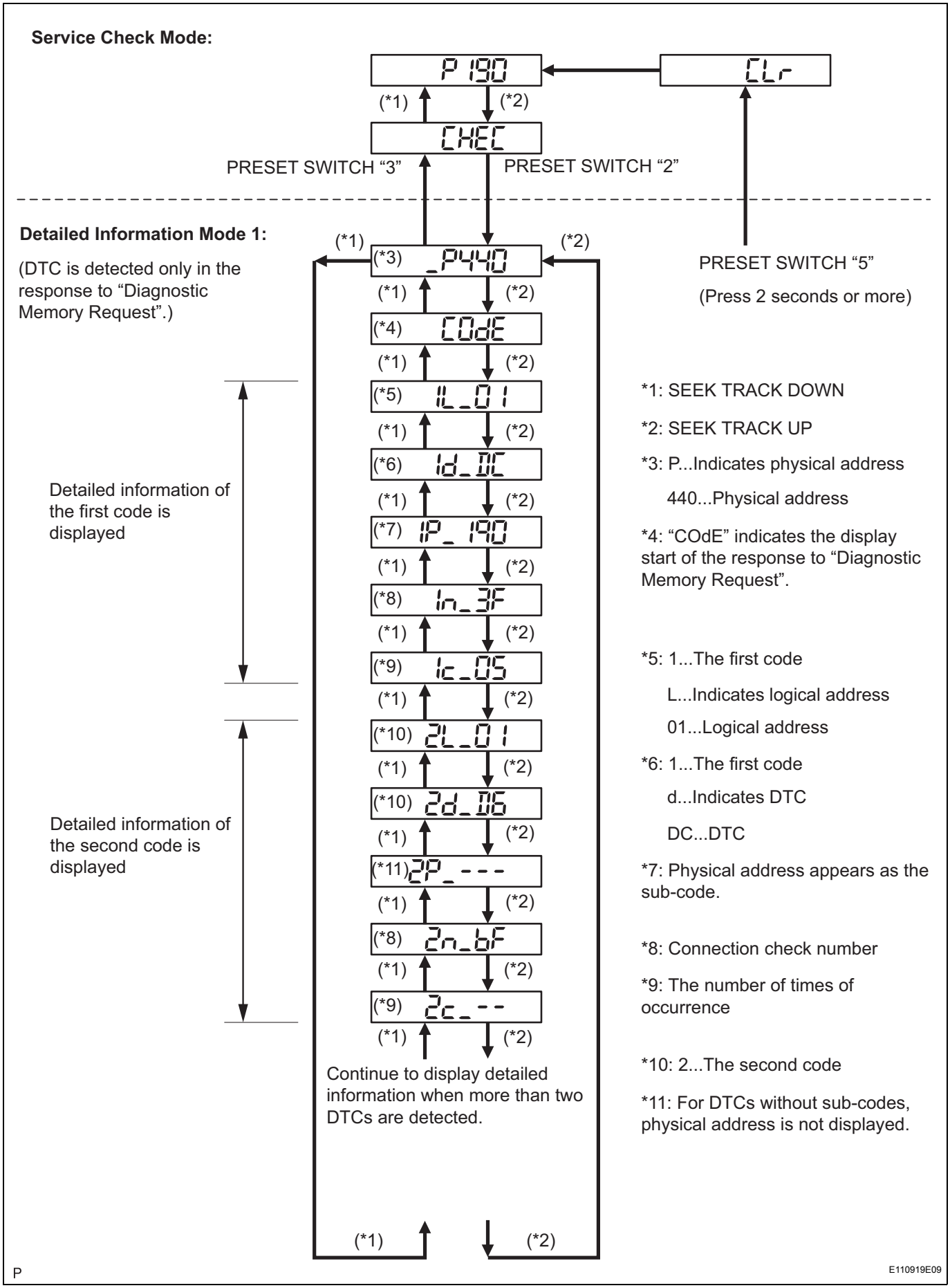
Service Check Mode:
P190
CLr
(*1)
(*2)
CHEC
PRESET SWITCH "3"
PRESET SWITCH "2"
Detailed Information Mode 1:
(DTC is detected only in the response to "Diagnostic Memory Request".)
(*3) _P440
PRESET SWITCH "5"
(Press 2 seconds or more)
(*4) COdE
(*5) 1L_01
(*6) 1d_DC
(*7) 1P_190
(*8) 1n_3F
(*9) 1c_05
(*10) 2L_01
(*10) 2d_D6
(*11) 2P_---
(*8) 2n_bF
(*9) 2c_--
Detailed information of the first code is displayed
Detailed information of the second code is displayed
Continue to display detailed information when more than two DTCs are detected.
*1: SEEK TRACK DOWN
*2: SEEK TRACK UP
*3: P...Indicates physical address
440...Physical address
*4: "COdE" indicates the display start of the response to "Diagnostic Memory Request".
*5: 1...The first code
L...Indicates logical address
01...Logical address
*6: 1...The first code
d...Indicates DTC
DC...DTC
*7: Physical address appears as the sub-code.
*8: Connection check number
*9: The number of times of occurrence
*10: 2...The second code
*11: For DTCs without sub-codes, physical address is not displayed.
E110919E09

AV

P

(f) Detailed information mode 2
HINT:
- "Detailed information mode 2" is displayed when DTCs are detected in the responses to both "System Check Result Request" and "Diagnostic Memory Request".
- The component device code (physical address) is displayed first, and then the check result follows.
- This illustration is only an example and may differ in cases such as for each option part and output DTCs.

(1) Press the preset switch "2" to go to the "Detailed Information Mode 2".
(2) Press the "SEEK TRACK" switch to display the physical address and DTC of the component.
(3) Press the preset switch "3" to go to the "Service Check Mode".
(4) Distinguish between the displays of the responses to "System Check Result Request" and "Diagnostic Memory Request". In order to distinguish the information detected in "System Check Mode" and "Diagnostic Memory Mode" in "ECHn", "CHEC", and "old" in "Detailed Information Mode 2", refer to the following:
- "SyS" is displayed before the detailed codes detected as a result of "System Check Result Request" are displayed.
- "COdE" is displayed before the detailed codes detected as a result of "Diagnostic Memory Request" are displayed.
HINT:
- The response to "System Check Result Request" is the current information given from each ECU as a result of the system check.
- The response to "Diagnostic Memory Request" contains the information received from each ECU or stored in each ECU in the past.
- The response to "Diagnostic Memory Request" is the output DTCs as a result of the diagnostic memory check or the DTCs received from each ECU.
- "System Check Result Request (SyS)" is displayed first, and then the logical address and DTC appear in order.
- "Diagnostic Memory Request (COdE)" is displayed first, and then the logical address, DTC, sub-code, connection check number, and the number of occurrence appear in order.

System Check Mode:

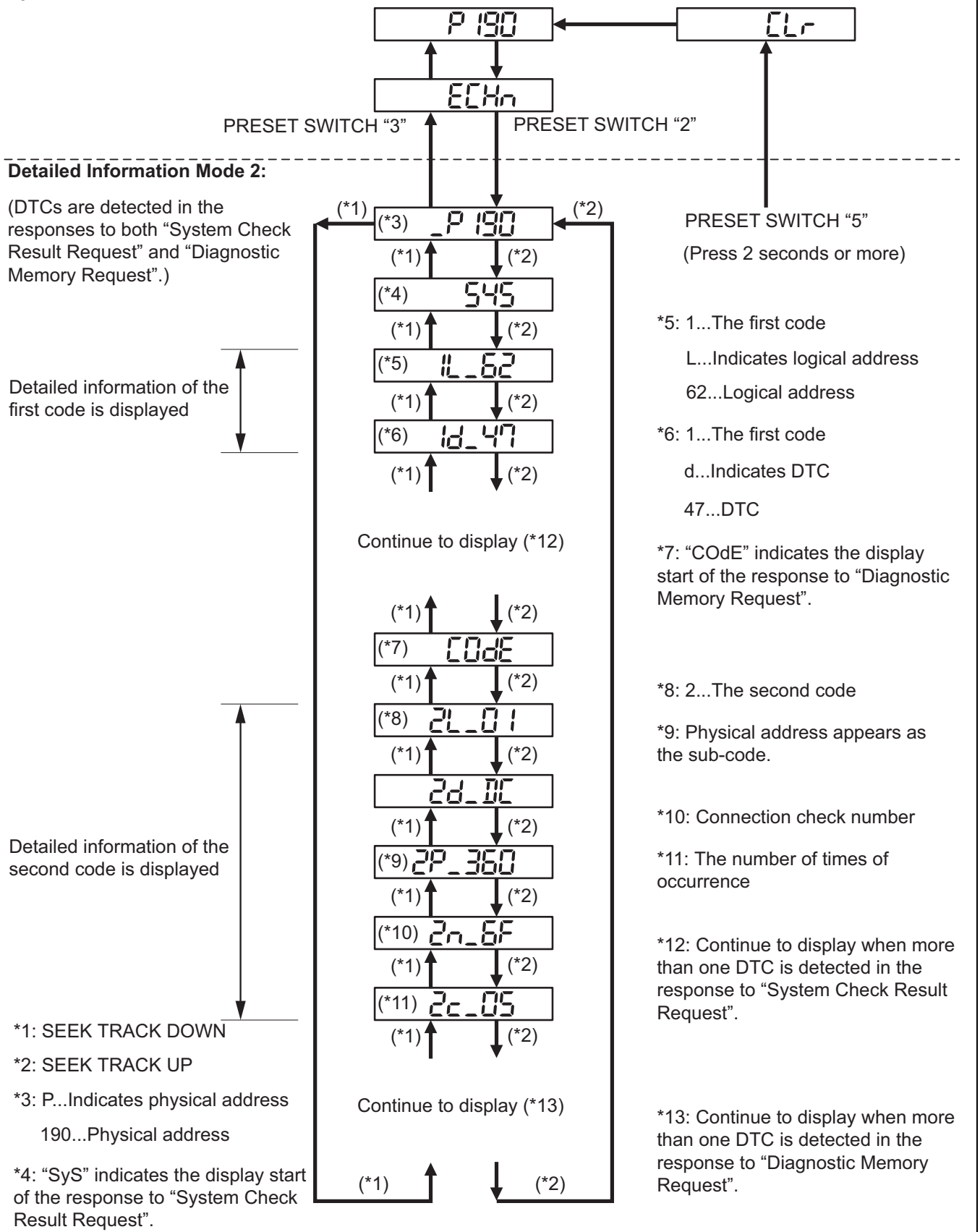

AV

P

E110918E07

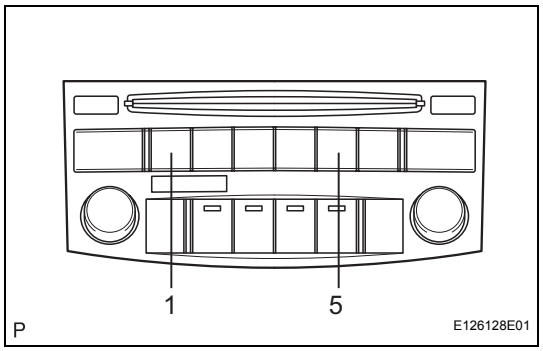

4. DTC CLEAR/RECHECK

(a) Clearing all DTC Memory (when clearing all the memory of the DTCs previously detected).
  (1) When the preset switch "5" is pressed for 2 seconds or more during "Service Check Mode", the DTCs for all components are cleared. ("CLr" is displayed at this time.)
  HINT:
  - A beep sound is emitted once when the DTC memory is completely cleared.
  - When the DTC memory for all the components is cleared, only the component codes (physical address) are displayed.
  - After the DTC memory is cleared, the "Service Check Mode" is restored.

(b) Clearing Individual DTC Memory (when clearing the memory of the DTC previously detected individually).
  (1) When the preset switch "5" is pressed for 2 seconds or more during "Detailed Information Mode 1" or "Detailed Information Mode 2", the DTCs for the target component are cleared.
  HINT:
  - A beep sound is emitted once when the DTC memory is completely cleared.
  - When the DTC memory is cleared, only the component code (physical address) is displayed for target component.
  - After the DTC memory is cleared, the "Service Check Mode" is restored.
  - To check DTCs, press the preset switch "1" and perform the system check again.

(c) Press the preset switch "1" to perform the service check again, and check that no DTCs are displayed for all the component codes (physical address).

DIAGNOSTIC TROUBLE CODE CHART

COMMUNICATION DIAGNOSIS

DTC No.	Detection Item	Trouble Area	See page
01-21	ROM Error	Radio receiver	AV-29
01-22	RAM Error	Radio receiver	AV-29
01-D5	Absence of Registration Unit	1. Power source circuit of the component shown by the sub-code 2. AVC-LAN circuit between the radio receiver and the component shown by the sub-code 3. Component shown by the sub-code	AV-30
01-D6	No Master	1. Radio receiver power source circuit 2. Power source circuit of the component which has stored this code 3. AVC-LAN circuit between the radio receiver and the component which has stored this code 4. Component which has stored this code 5. Radio receiver	AV-32
01-D7	Connection Check Error	1. Radio receiver power source circuit 2. Power source circuit of the component which has stored this code 3. AVC-LAN circuit between the radio receiver and the component which has stored this code 4. Component which has stored this code 5. Radio receiver	AV-32
01-D8	No Response for Connection Check	1. Power source circuit of the component shown by the sub-code 2. AVC-LAN circuit between the radio receiver and the component shown by the sub-code 3. Component shown by the sub-code	AV-30
01-D9	Last Mode Error	1. Power source circuit of the component shown by the sub-code 2. AVC-LAN circuit between the radio receiver and the component shown by the sub-code 3. Component shown by the sub-code	AV-30
01-DA	No Response Against ON / OFF Command	1. Power source circuit of the component shown by the sub-code 2. AVC-LAN circuit between the radio receiver and the component shown by the sub-code 3. Component shown by the sub-code	AV-30

DTC No.	Detection Item	Trouble Area	See page
01-DB	Mode Status Error	1. Power source circuit of the component shown by the sub-code 2. AVC-LAN circuit between the radio receiver and the component shown by the sub-code 3. Component shown by the sub-code	AV-30
01-DC	Transmission Error	If the same sub-code is recorded in other components, check harness for power supply and communication system of all components shown by code.	AV-38
01-DD	Master Reset	1. Radio receiver power source circuit 2. AVC-LAN circuit between the radio receiver and the component which has stored this code 3. Radio receiver 4. Component which has stored this code	AV-41
01-DE	Slave Reset	1. Power source circuit of the component shown by the sub-code 2. AVC-LAN circuit between the radio receiver and the component shown by the sub-code 3. Component shown by the sub-code	AV-30
01-DF	Master Error	1. Radio receiver power source circuit 2. AVC-LAN circuit between the radio receiver and the component which has stored this code 3. Radio receiver 4. Component which has stored this code	AV-47
01-E0	Registration Complete Indication Error	-	AV-53
01-E1	Voice Processing Device ON Error	1. Radio receiver power source circuit 2. AVC-LAN circuit between the radio receiver and the component which has stored this code 3. Radio receiver 4. Component which has stored this code	AV-41
01-E2	ON / OFF Indication Parameter Error	Radio receiver	AV-54
01-E3	Registration Demand Transmission	-	AV-53
01-E4	Multiple Frame Incomplete	-	AV-53

CASSETTE PLAYER

DTC No.	Detection Item	Trouble Area	See page
61-10	Belt Cut	Tape player	AV-55
61-40	Mechanical Error of Media	1. Cassette tape 2. Tape player	AV-56
61-41	Eject Error	1. Cassette tape 2. Tape player	AV-56
61-42	Tape Tangling	1. Cassette tape 2. Tape player	AV-56
61-43	Head Dirt	Tape player	AV-58

DTC No.	Detection Item	Trouble Area	See page
61-44	Device Power Supply Problem	Tape player	AV-59

CD PLAYER

DTC No.	Detection Item	Trouble Area	See page
62-10	CD Player Mechanical Error	Radio receiver	AV-61
62-11	CD Insertion and Eject Error	Radio receiver	AV-61
62-12	CD Reading Abnormal	Radio receiver	AV-61
62-40	No Disc	Radio receiver	AV-60
62-41	Wrong Disc	1. CD 2. Radio receiver	AV-62
62-42	Disc cannot be Read	1. CD 2. Radio receiver	AV-62
62-43	CD-ROM Abnormal	1. CD 2. Radio receiver	AV-64
62-44	CD Abnormal	Radio receiver	AV-65
62-45	Eject Error	Radio receiver	AV-66
62-46	Scratched / Reversed Disc	1. CD 2. Radio receiver	AV-67
62-47	High Temperature	Radio receiver	AV-69
62-48	Excess Current	Radio receiver	AV-65
62-50	Tray Insertion / Ejection Error	Radio receiver	AV-65
62-51	Elevator Error	Radio receiver	AV-66
62-52	Clamp Error	Radio receiver	AV-66

IN-DASH CD CHANGER

DTC No.	Detection Item	Trouble Area	See page
63-10	CD Changer Mechanical Error	Radio receiver	AV-61
63-11	CD Insertion and Eject Error	Radio receiver	AV-61
63-12	CD Reading Abnormal	Radio receiver	AV-61
63-40	No Disc	Radio receiver	AV-60
63-41	Wrong Disc	1. CD 2. Radio receiver	AV-62
63-42	Disc cannot be Read	1. CD 2. Radio receiver	AV-62
63-43	CD-ROM Abnormal	1. CD 2. Radio receiver	AV-64
63-44	CD Abnormal	Radio receiver	AV-65
63-45	Eject Error	Radio receiver	AV-66
63-46	Scratched / Reversed Disc	1. CD 2. Radio receiver	AV-67
63-47	High Temperature	Radio receiver	AV-69
63-48	Excess Current	Radio receiver	AV-65
63-50	Tray Insertion / Ejection Error	Radio receiver	AV-65
63-51	Elevator Error	Radio receiver	AV-66
63-52	Clamp Error	Radio receiver	AV-66

DTC	01-21	ROM Error

DTC	01-22	RAM Error

DESCRIPTION

DTC No.	DTC Detection Condition	Trouble Area
01-21	A malfunction exists in ROM.	Radio receiver
01-22	A malfunction exists in RAM.	

INSPECTION PROCEDURE

HINT:
After the inspection is completed, clear the DTCs.

1	REPLACE RADIO RECEIVER

NEXT

AV

END

DTC	01-D5	Absence of Registration Unit

DTC	01-D8	No Response for Connection Check

DTC	01-D9	Last Mode Error

DTC	01-DA	No Response Against ON / OFF Command

DTC	01-DB	Mode Status Error

DTC	01-DE	Slave Reset

DESCRIPTION

DTC No.	DTC Detection Condition	Trouble Area
01-D5 *1, *3	A device that the sub-code shows is (was) disconnected from the system when turning the ignition switch on (ACC or IG). The communication condition with the device that the code shows cannot be obtained when the engine starts.	• Power source circuit of the component shown by the sub-code • AVC-LAN circuit between the radio receiver and the component shown by the sub-code • Component shown by the sub-code
01-D8 *2, *3	The device indicated by the sub-code is (was) disconnected from the system after the engine starts.	
01-D9 *1, *3	The device that had functioned before the engine stopped is (was) disconnected from the system when the ignition switch is (was) on (ACC or IG).	
01-DA *3	No response is identified when changing mode. Sound and image do not change by switch operation.	
01-DB *1, *3	A dual alarm is detected.	
01-DE *3, *4	A slave device has been disconnected after the engine starts.	

HINT:

- *1: Even if no fault is present, this trouble code may be stored depending on the battery condition or engine start voltage.
- *2: If the power connector is disconnected after the engine starts, this code is stored after 180 seconds.
- *3: If the device is reported as not existing during verification, check the power source circuit and AVC-LAN circuit for the device.
- *4: This code may be stored if the engine is started and the ignition switch is turned to the START position again. (Key type ignition switch only)

NOTICE:

- **Before starting troubleshooting, be sure to clear DTCs to erase codes stored due to the reasons described in the HINT above. Then, check for DTCs and troubleshoot according to the output DTCs.**
- **The radio receiver is the master unit.**
- **Be sure to clear and recheck DTCs after the inspection is completed to confirm that no DTCs are output.**

INSPECTION PROCEDURE

NOTICE:

Be sure to read DESCRIPTION before performing the following procedures.

1	CHECK "RADIO RECEIVER COMMUNICATION ERROR" IN FLOW CHART

Refer to the radio receiver communication error (See page AV-127).

NEXT

END

DTC	01-D6	No Master

DTC	01-D7	Connection Check Error

DESCRIPTION

DTC No.	DTC Detection Condition	Trouble Area
01-D6 *1	When either of the following conditions is met: • The device that stores (stored) the code has (had) been disconnected when the ignition switch is on (ACC or IG) • The master device has (had) been disconnected when this code is stored	• Radio receiver power source circuit • Power source circuit of the component which has stored this code • AVC-LAN circuit between the radio receiver and the component which has stored this code • Component which has stored this code • Radio receiver
01-D7 *2	When either of the following conditions is met: • The device that stored the code has (had) been disconnected after the engine starts (started) • The master device has (had) been disconnected when this code is (was) stored	

HINT:

- *1: Even if no fault is present, this trouble code may be stored depending on the battery condition or engine start voltage.
- *2: When 210 seconds have elapsed after disconnecting the power supply connector of the master component with the ignition switch on (ACC or IG), this code is stored.

NOTICE:

- **Before starting troubleshooting, be sure to clear DTCs to erase codes stored due to the reasons described in the HINT above. Then, check for DTCs and troubleshoot according to the output DTCs.**
- **The radio receiver is the master unit.**
- **Be sure to clear and recheck DTCs after the inspection is completed to confirm that no DTCs are output.**

INSPECTION PROCEDURE

NOTICE:

Be sure to read DESCRIPTION before performing the following procedures.

1	CHECK RADIO RECEIVER POWER SOURCE CIRCUIT

Refer to the radio receiver power source circuit (See page AV-147).

If the power source circuit is operating normally, proceed to the next step.

NEXT

2	IDENTIFY THE COMPONENT WHICH HAS STORED THIS CODE

(a) Enter the diagnostic mode.

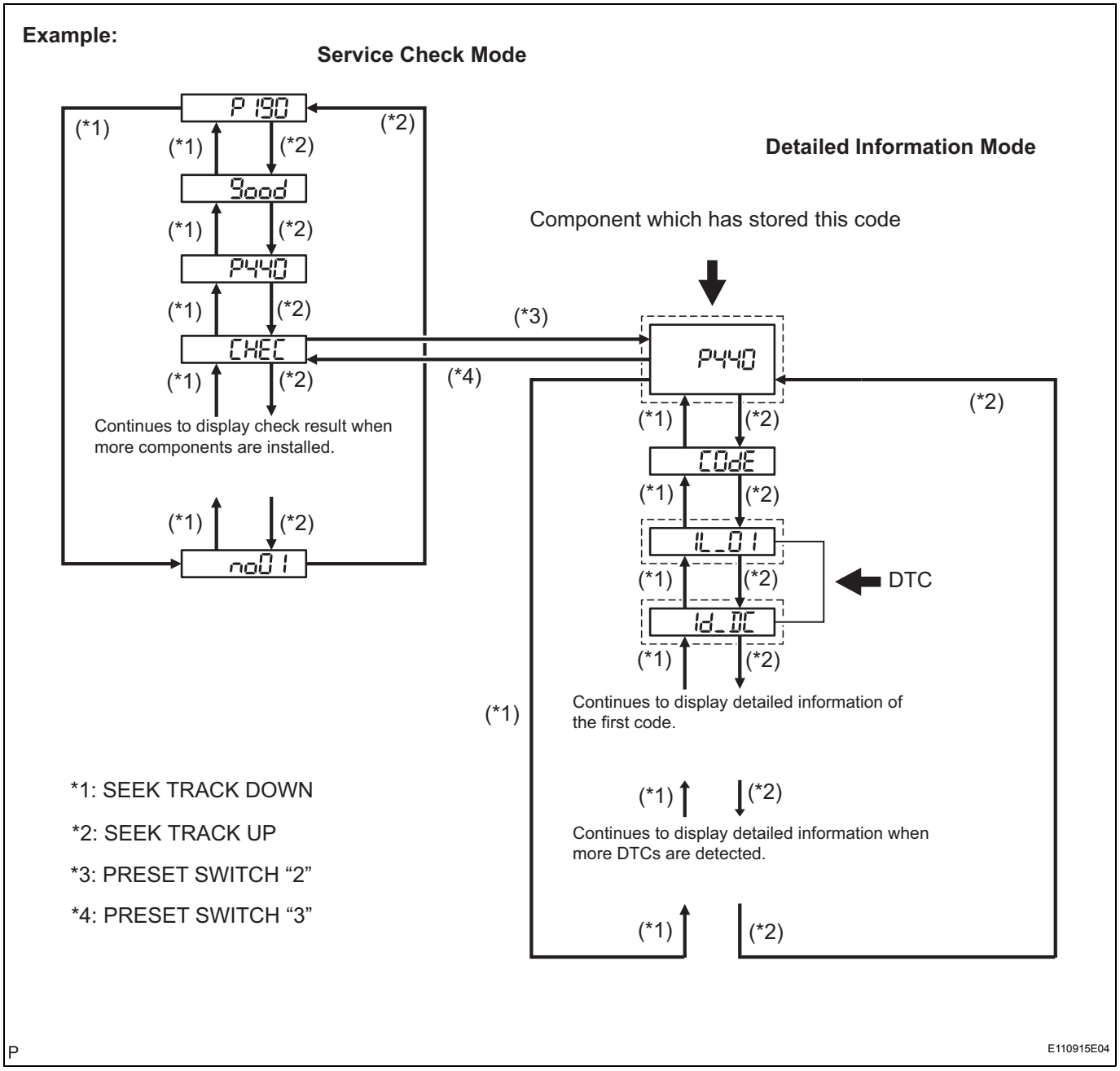

(b) Press the preset switch "3" to change to "Detailed Information Mode".
(c) Identify the component which has stored this code.

Component Table:

Component	Physical address
Gateway ECU	1C6
Multi-display (Accessory meter)	1D4
Tape player	320
Stereo component amplifier	440

HINT:

- "440 (stereo component amplifier)" is the component which has stored this code in the example shown in the illustration.
- For details of the DTC display, refer to "DTC CHECK/ CLEAR" (See page AV-18).

AV

NEXT

3	CHECK POWER SOURCE CIRCUIT OF COMPONENT WHICH HAS STORED THIS CODE

(a) Inspect the power source circuit of the component which has stored this code.
If the power source circuit is operating normally, proceed to the next step.

Component Table:

Component	Proceed to
Gateway ECU	Gateway ECU power source circuit (See page AV-153)
Multi-display (Accessory meter)	Multi-display power source circuit (See page AV-151)
Tape player	Tape player power source circuit (See page AV-155)
Stereo component amplifier	Stereo component amplifier power source circuit (See page AV-149)

NEXT

4	INSPECT RADIO RECEIVER

Wire Harness View (12 Speaker):

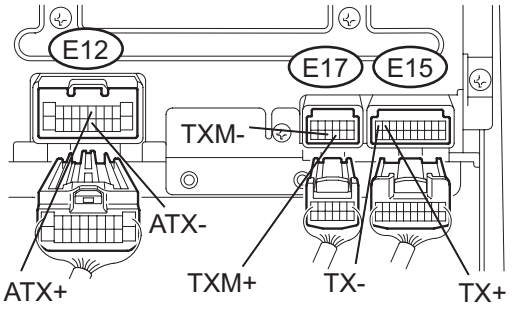

Wire Harness View

(9 Speaker, 6 CD Type):

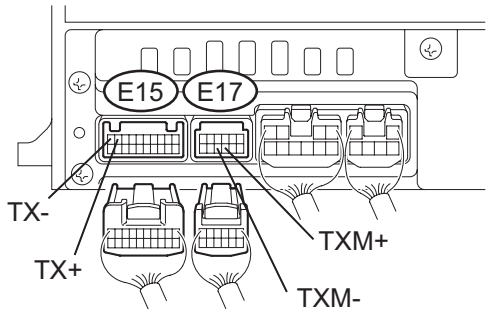

Wire Harness View

(9 Speaker, 1 CD Type):

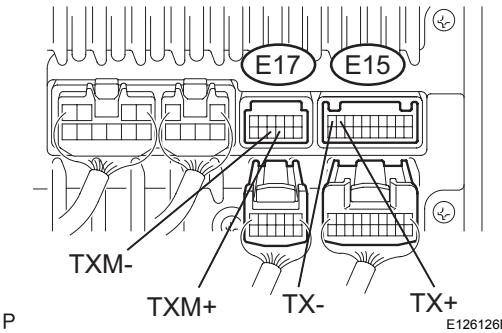

P E126126E02

(a) Disconnect the radio receiver connectors.
(b) Measure the resistance according to the value(s) in the table below.

Standard resistance

Tester Connection	Condition	Specified Condition
TX+ (E15-9) - TX- (E15-10)	Always	60 to 80 Ω
TXM+ (E17-9) - TXM- (E17-10) (*1)	Always	60 to 80 Ω
ATX+ (E12-5) - ATX- (E12-15) (*2)	Always	60 to 80 Ω

*1: with Tape Player
*2: for 12 Speaker System

NG → REPLACE RADIO RECEIVER

OK

5	CHECK HARNESS AND CONNECTOR (RADIO RECEIVER - COMPONENT WHICH HAS STORED THIS CODE)

HINT:
For details of the connectors, refer to "TERMINALS OF ECU" (See page AV-13).

(a) Referring to the AVC-LAN wiring diagram below, check the AVC-LAN circuit between the radio receiver and the component which has stored this code.

AV

(1) Disconnect all connectors between the radio receiver and the component which has stored this code.
(2) Check for an open or short in the AVC-LAN circuit between the radio receiver and the component which has stored this code.
OK:
There is no open or short circuit.

AVC-LAN WIRING DIAGRAM

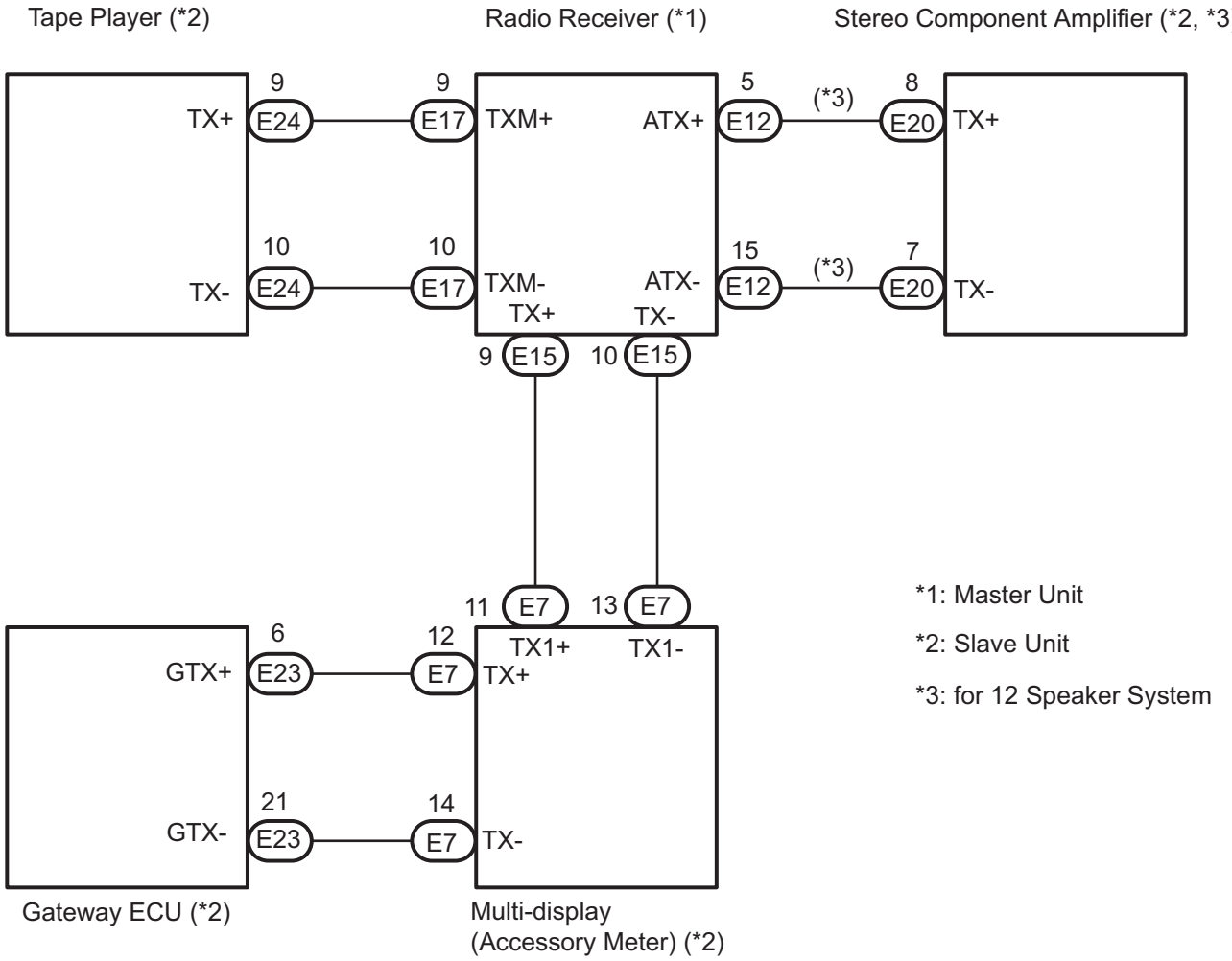

AV

NG → **REPAIR OR REPLACE HARNESS OR CONNECTOR**

OK

6	REPLACE COMPONENT WHICH HAS STORED THIS CODE

(a) Replace the component which has stored this code with a normal one and check if the same problem occurs again.
OK:
Same problem does not occur.

NG → **REPLACE RADIO RECEIVER**

OK

END

DTC 01-DC Transmission Error

DESCRIPTION

DTC No.	DTC Detection Condition	Trouble Area
01-DC *1	Transmission to component shown by sub-code failed (Detecting this DTC does not always mean actual failure)	If the same sub-code is recorded in other components, check harness for power supply and communication system of all components shown by code

HINT:
*1: This code may be stored if the engine is started, idled for 60 seconds and then started again. (Key type ignition switch only)
NOTICE:
- **The radio receiver is the master unit.**
- **Be sure to clear and recheck DTCs after the inspection is completed to confirm that no DTCs are output.**
- **Before starting troubleshooting, be sure to clear DTCs to erase codes stored due to the reasons described in the HINT above. Them, check for DTCs and troubleshoot according to the output DTCs.**

AV

INSPECTION PROCEDURE

NOTICE:
Be sure to read DESCRIPTION before performing the following procedures.

1 CHECK FOR DTC OF OTHER COMPONENTS

(a) Check if the component shown by the sub-code is displayed in the check result of the other components.
  (1) Check if "01-DC" is output for the other components.
  (2) If "01-DC" is output for any other components, check if the same physical address is displayed.
  Result

Result	Proceed to
"01-DC" is output and the same physical address is displayed	**A**
"01-DC" is not output or the same physical address is not displayed	**B**

HINT:
For the list of the components shown by sub-codes, refer to the table in step 2.

B → **Go to step 4**

A

2 IDENTIFY THE COMPONENT WHICH HAS STORED THIS CODE

(a) Enter the diagnostic mode.

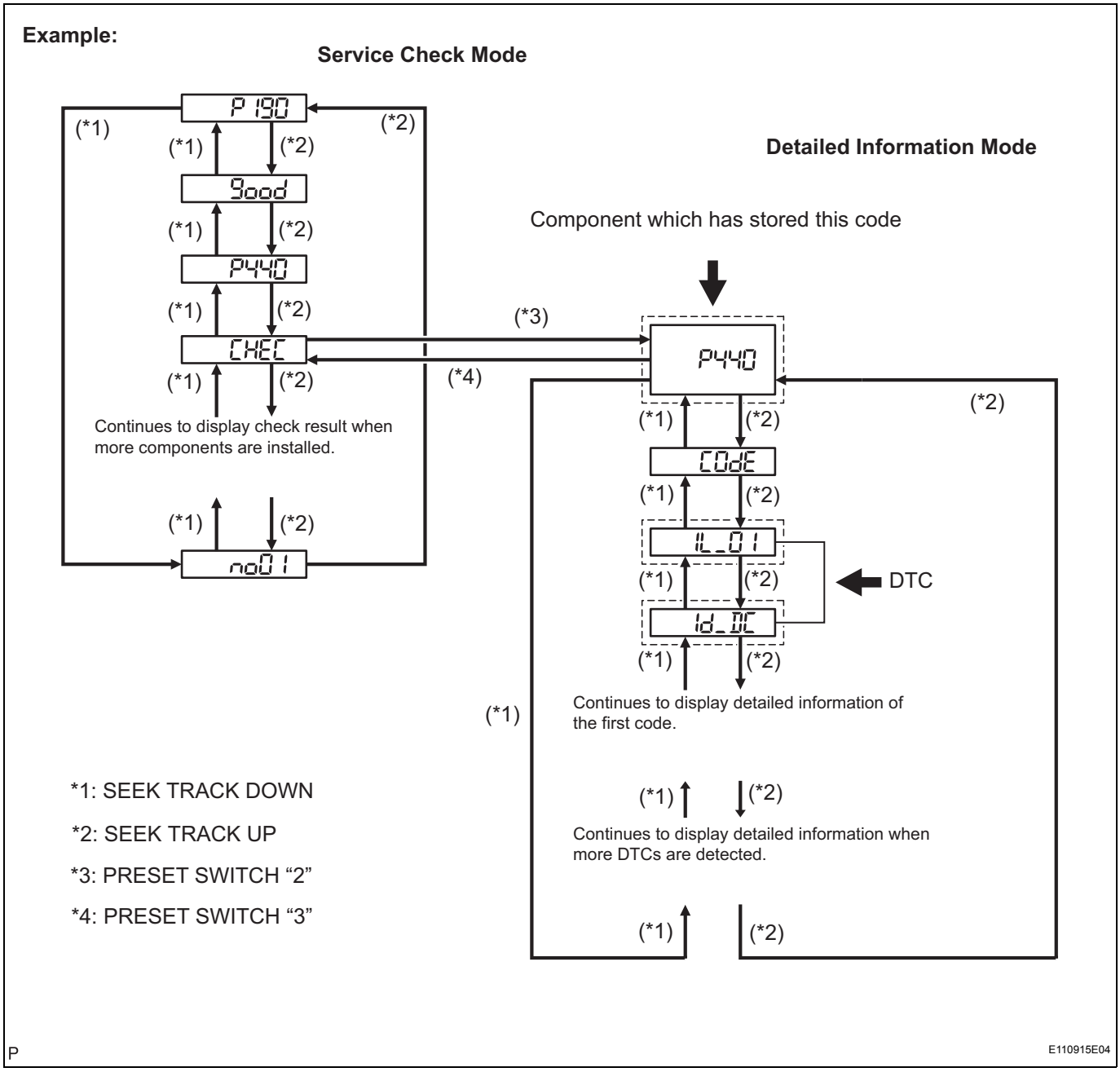

(b) Press the preset switch "3" to change to "Detailed Information Mode".
(c) Identify the component which has stored this code.

Component Table:

Component	Physical address
Gateway ECU	1C6
Radio receiver	190
Multi-display (Accessory meter)	1D4
Tape player	320
Stereo component amplifier	440

HINT:

- "440 (stereo component amplifier)" is the component which has stored this code in the example shown in the illustration.

AV

- For details of the DTC display, refer to "DTC CHECK/ CLEAR" (See page AV-18).

NEXT

3	CHECK COMPONENT WHICH HAS STORED THIS CODE

(a) Select the component which has stored this code.

Component Table:

Component	Proceed to
Gateway ECU	Gateway ECU communication error (See page AV-122)
Radio receiver	Radio receiver communication error (See page AV-127)
Multi-display (Accessory meter)	Multi-display communication error (See page AV-137)
Tape player	Tape player communication error (See page AV-142)
Stereo component amplifier	Stereo component amplifier communication error (See page AV-132)

NEXT

AV

END

4	CLEAR DTC

(a) Clear the DTCs (See page AV-18).
HINT:
If "01-DC" is output for only one component, this may not indicate a malfunction.

NEXT

5	RECHECK DTC

(a) Recheck for DTCs and check if the same trouble code occurs again.
OK:
Malfunction disappears.

NG → **Go to step 3**

OK

END

DTC	01-DD	Master Reset

DTC	01-E1	Voice Processing Device ON Error

DESCRIPTION

DTC No.	DTC Detection Condition	Trouble Area
01-DD *2	The device that should be the master has been disconnected after engine start	• Radio receiver power source circuit • AVC-LAN circuit between the radio receiver and the component which has stored this code • Radio receiver • Component which has stored this code
01-E1 *1	The AMP device records that the AMP output does not function even while the source device operates	

HINT:

- *1: Even if no fault is present, this trouble code may be stored depending on the battery condition or engine start voltage.
- *2: This code may be stored if the engine is started and the ignition switch is turned to the START position again. (Key type ignition switch only)

NOTICE:

- **Before starting troubleshooting, be sure to clear DTCs to erase codes stored due to the reasons described in the HINT above. Then, check for DTCs and troubleshoot according to the output DTCs.**
- **The radio receiver is the master unit.**
- **Be sure to clear and recheck DTCs after the inspection is completed to confirm that no DTCs are output.**

AV

INSPECTION PROCEDURE

NOTICE:

Be sure to read DESCRIPTION before performing the following procedures.

1	CHECK RADIO RECEIVER POWER SOURCE CIRCUIT

Refer to the radio receiver power source circuit (See page AV-147).

If the power source circuit is operating normally, proceed to the next step.

NEXT

2	INSPECT RADIO RECEIVER

Wire Harness View (12 Speaker):

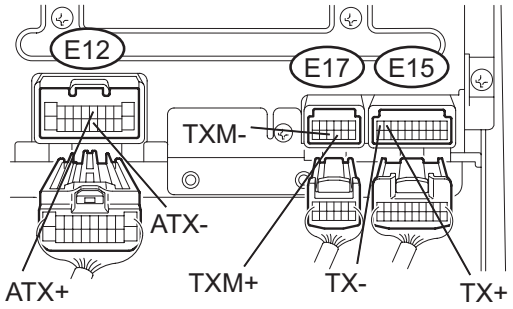

Wire Harness View

(9 Speaker, 6 CD Type):

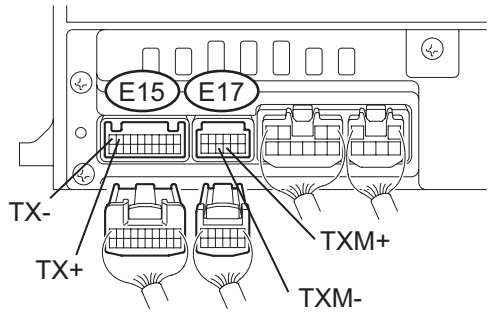

Wire Harness View

(9 Speaker, 1 CD Type):

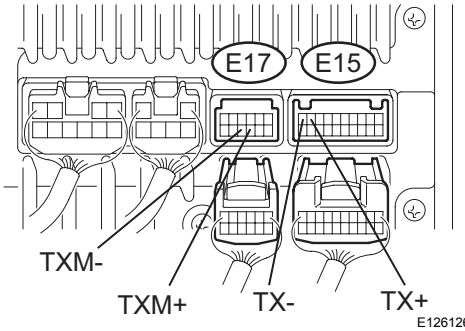

P E126126E02

(a) Disconnect the radio receiver connectors.
(b) Measure the resistance according to the value(s) in the table below.

Standard resistance

Tester Connection	Condition	Specified Condition
TX+ (E15-9) - TX- (E15-10)	Always	60 to 80 Ω
TXM+ (E17-9) - TXM- (E17-10) (*1)	Always	60 to 80 Ω
ATX+ (E12-5) - ATX- (E12-15) (*2)	Always	60 to 80 Ω

*1: with Tape Player
*2: for 12 Speaker System

NG → **REPLACE RADIO RECEIVER**

OK

3	IDENTIFY THE COMPONENT WHICH HAS STORED THIS CODE

(a) Enter the diagnostic mode.

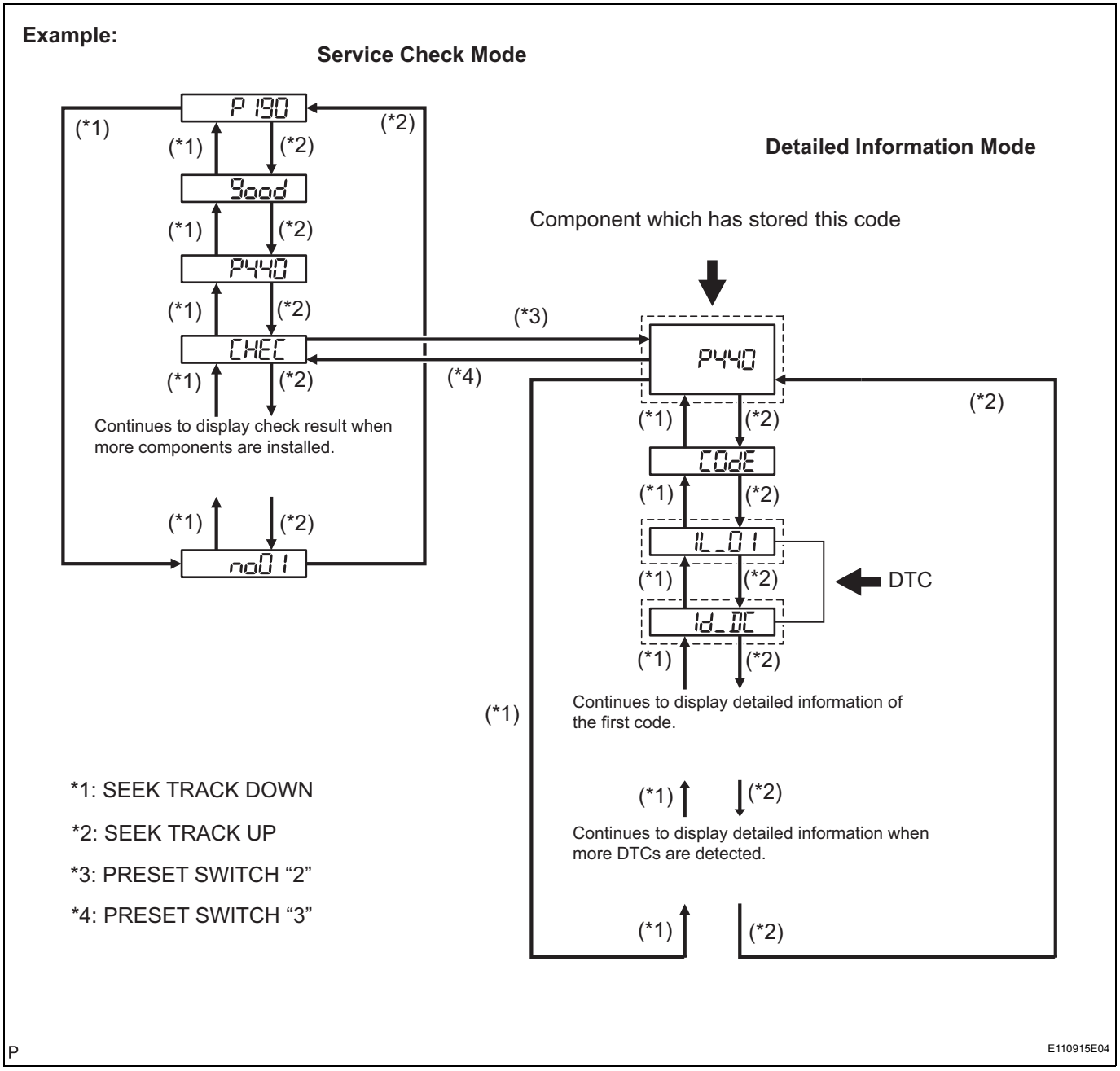

(b) Press the preset switch "3" to change to "Detailed Information Mode".

(c) Identify the component which has stored this code.

Component Table

Component	Physical address
Gateway ECU	1C6
Multi-display (Accessory meter)	1D4
Tape player	320
Stereo component amplifier	440

HINT:

- "440 (stereo component amplifier)" is the component which has stored this code in the example shown in the illustration.
- For details of the DTC display, refer to "DTC CHECK/ CLEAR" (See page AV-18).

AV

NEXT

4	**CHECK HARNESS AND CONNECTOR (RADIO RECEIVER - COMPONENT WHICH HAS STORED THIS CODE)**

HINT:
For details of the connectors, refer to "TERMINALS OF ECU" (See page AV-13).

(a) Referring to the AVC-LAN wiring diagram below, check the AVC-LAN circuit between the radio receiver and the component which has stored this code.
  (1) Disconnect all connectors between the radio receiver and the component which has stored this code.
  (2) Check for an open or short in the AVC-LAN circuit between the radio receiver and the component which has stored this code.
  OK:
  There is no open or short circuit.

AVC-LAN WIRING DIAGRAM

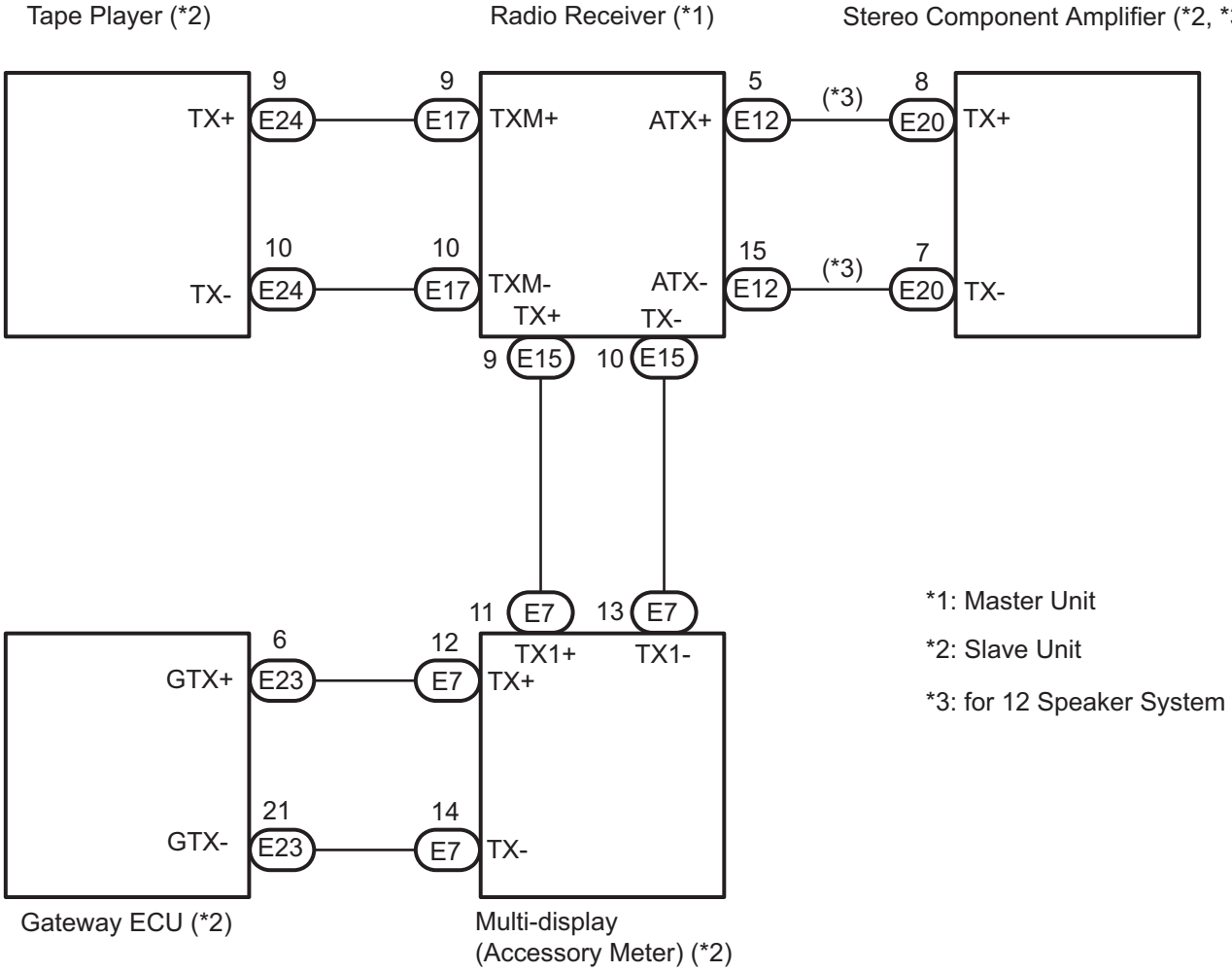

AV

NG → **REPAIR OR REPLACE HARNESS OR CONNECTOR**

OK

5	**REPLACE RADIO RECEIVER**

(a) Replace the radio receiver with a normal one and check if the same problem occurs again.
OK:
Same problem does not occur.

NG → **REPLACE COMPONENT WHICH HAS STORED THIS CODE**

OK

END

DTC	01-DF	Master Error

DESCRIPTION

DTC No.	DTC Detection Condition	Trouble Area
01-DF *1	The device with a display fails and the master is switched to the audio device. Also when a communication error between sub-master (audio) and master occurs, this code is stored.	• Radio receiver power source circuit • AVC-LAN circuit between the radio receiver and the component which has stored this code • Radio receiver • Component which has stored this code

HINT:
*1: When 210 seconds have elapsed after disconnecting the power supply connector of the master component with the ignition switch on (ACC or IG), this code is stored.

NOTICE:

- **Before starting troubleshooting, be sure to clear DTCs to erase codes stored due to the reasons described in the HINT above. Then, check for DTCs and troubleshoot according to the output DTCs.**
- **The radio receiver is the master unit.**
- **Be sure to clear and recheck DTCs after the inspection is completed to confirm that no DTCs are output.**

AV

INSPECTION PROCEDURE

NOTICE:

Be sure to read DESCRIPTION before performing the following procedures.

1	CHECK RADIO RECEIVER POWER SOURCE CIRCUIT

Refer to the radio receiver power source circuit (See page AV-147).

If the power source circuit is operating normally, proceed to the next step.

NEXT

2	INSPECT RADIO RECEIVER

Wire Harness View (12 Speaker):

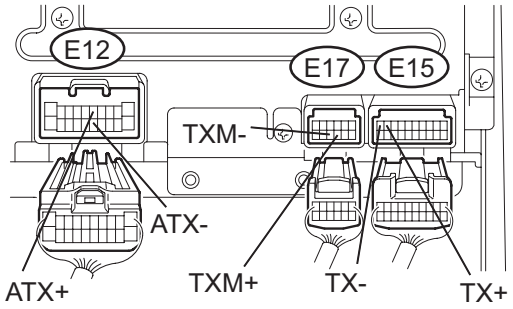

Wire Harness View

(9 Speaker, 6 CD Type):

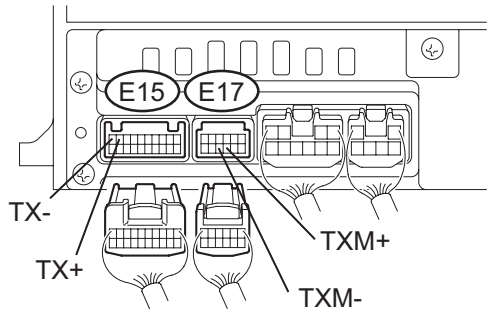

Wire Harness View

(9 Speaker, 1 CD Type):

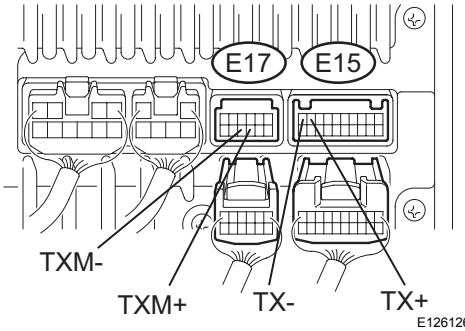

P E126126E02

(a) Disconnect the radio receiver connectors.
(b) Measure the resistance according to the value(s) in the table below.

Standard resistance

Tester Connection	Condition	Specified Condition
TX+ (E15-9) - TX- (E15-10)	Always	60 to 80 Ω
TXM+ (E17-9) - TXM- (E17-10) (*1)	Always	60 to 80 Ω
ATX+ (E12-5) - ATX- (E12-15) (*2)	Always	60 to 80 Ω

*1: with Tape Player
*2: for 12 Speaker System

NG → **REPLACE RADIO RECEIVER**

OK

3	IDENTIFY THE COMPONENT WHICH HAS STORED THIS CODE

(a) Enter the diagnostic mode.

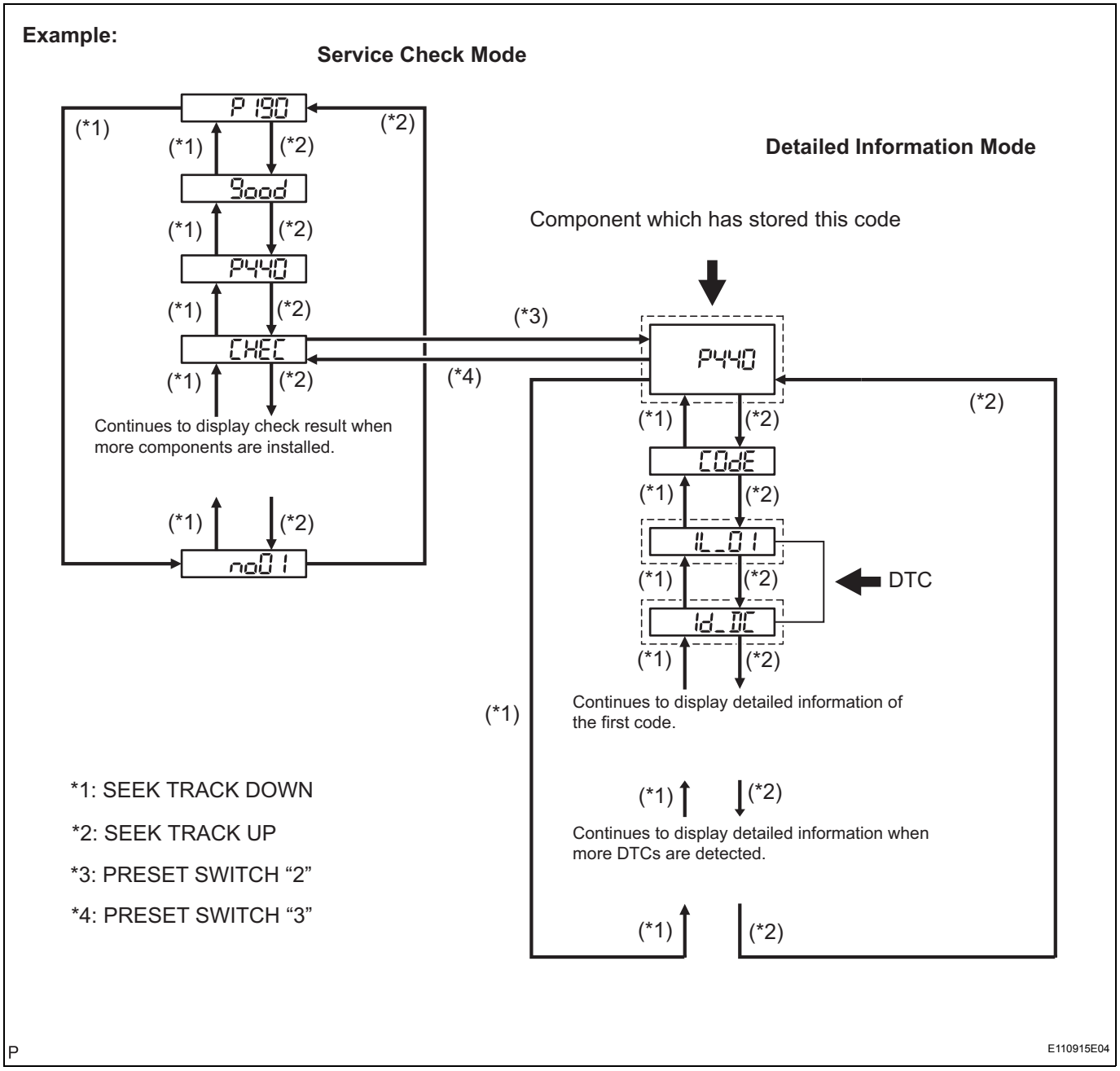

(b) Press the preset switch "3" to change to "Detailed Information Mode".

(c) Identify the component which has stored this code.

Component Table:

Component	Physical address
Gateway ECU	1C6
Multi-display (Accessory meter)	1D4
Tape player	320
Stereo component amplifier	440

HINT:

- "440 (stereo component amplifier)" is the component which has stored this code in the example shown in the illustration.
- For details of the DTC display, refer to "DTC CHECK/ CLEAR" (See page AV-18).

AV

NEXT

4	**CHECK HARNESS AND CONNECTOR (RADIO RECEIVER - COMPONENT WHICH HAS STORED THIS CODE)**

HINT:
For details of the connectors, refer to "TERMINALS OF ECU" (See page AV-13).

(a) Referring to the AVC-LAN wiring diagram below, check the AVC-LAN circuit between the radio receiver and the component which has stored this code.
  (1) Disconnect all connectors between the radio receiver and the component which has stored this code.
  (2) Check for an open or short in the AVC-LAN circuit between the radio receiver and the component which has stored this code.
  OK:
  There is no open or short circuit.

AVC-LAN WIRING DIAGRAM

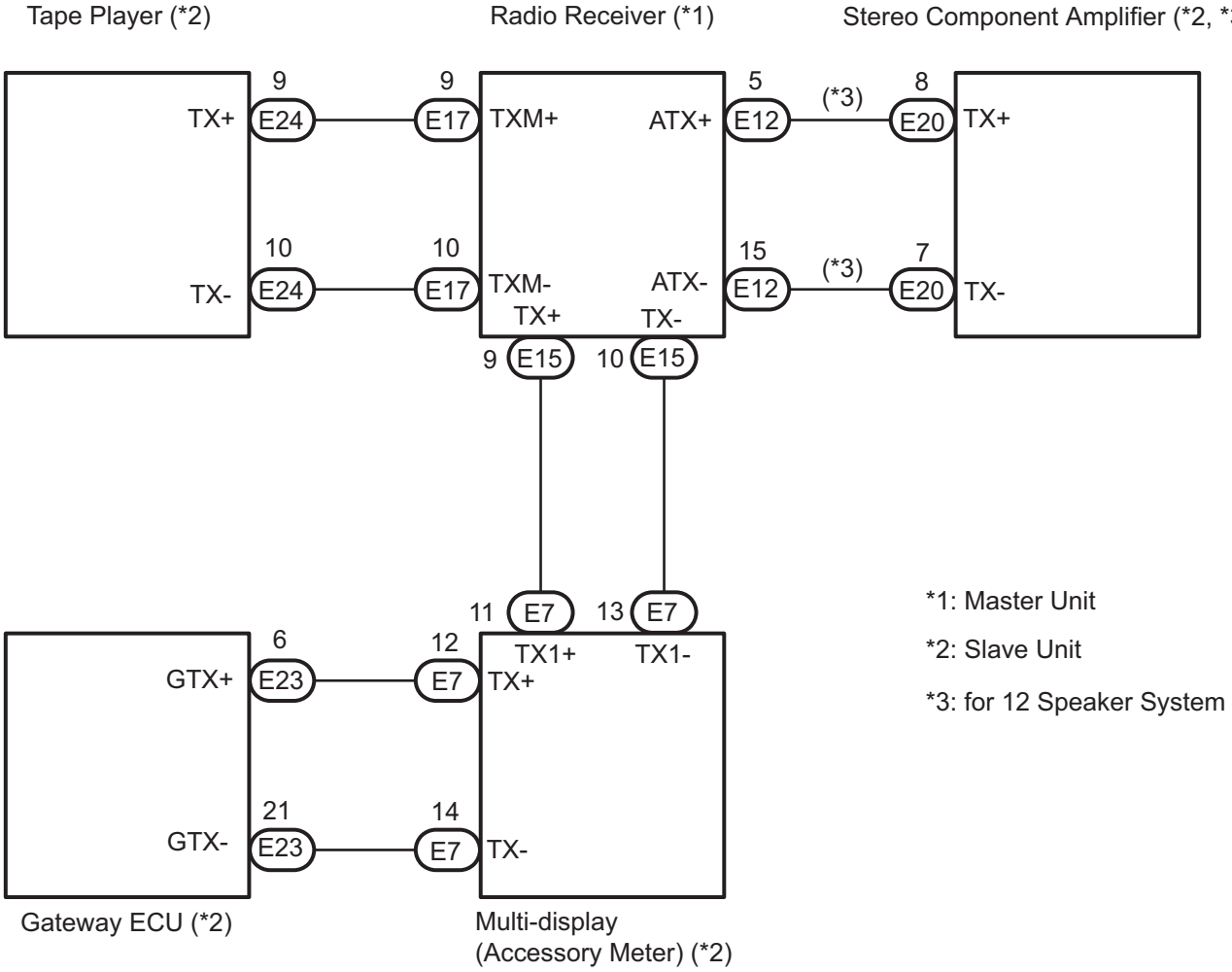

AV

NG → **REPAIR OR REPLACE HARNESS OR CONNECTOR**

OK

5	**REPLACE RADIO RECEIVER**

(a) Replace the radio receiver with a normal one and check if the same problem occurs again.
OK:
Same problem does not occur.

NG → **REPLACE COMPONENT WHICH HAS STORED THIS CODE**

OK

END

DTC	01-E0	Registration Complete Indication Error

DTC	01-E3	Registration Demand Transmission

DTC	01-E4	Multiple Frame Incomplete

DESCRIPTION

DTC No.	DTC Detection Condition	Trouble Area
01-E0	"Registration complete" signal from the master device cannot be received.	-
01-E3	The registration demand signal from the slave device is output. Or the registration demand signal is output by receiving connection confirmation signal from the sub-master device.	-
01-E4	The multiple frame transmission is incomplete.	-

HINT:
Even if no fault is present, this a trouble code may be stored depending on the battery condition or engine start voltage.

AV

INSPECTION PROCEDURE

HINT:
After the inspection is completed, clear the DTCs. These DTCs do not indicate a malfunction.

DTC	01-E2	ON / OFF Indication Parameter Error

DESCRIPTION

DTC No.	DTC Detection Condition	Trouble Area
01-E2	The command for ON / OFF control from the master device has a problem.	Radio receiver

INSPECTION PROCEDURE

HINT:
After the inspection is completed, clear the DTCs.

1	REPLACE RADIO RECEIVER

NEXT

END

DTC	61-10	Belt Cut

DESCRIPTION

DTC No.	DTC Detection Condition	Trouble Area
61-10	The inside belt is cut or comes off	Tape player

INSPECTION PROCEDURE

HINT:
After the inspection is completed, clear the DTCs.

1	REPLACE TAPE PLAYER

NEXT

END

DTC	61-40	Mechanical Error of Media

DTC	61-41	Eject Error

DTC	61-42	Tape Tangling

DESCRIPTION

DTC No.	DTC Detection Condition	Trouble Area
61-40	A or mechanical problem occurs, or cassette tape is cut or entangled.	• Cassette tape • Tape player
61-41	A malfunction due to mechanical problem.	
61-42	Cassette tape is tangled.	

INSPECTION PROCEDURE

HINT:
After the inspection is completed, clear the DTCs.

AV

1	CHECK OPERATION

(a) Press the cassette tape EJECT switch of the tape player for 2 seconds or more and check that the cassette tape is ejected.
OK:
Cassette tape is ejected.

NG → **REPLACE TAPE PLAYER**

OK

2	CHECK CASSETTE TAPE

(a) Check that the ejected cassette tape does not have a peeling label, cassette body deformation or other problems.
OK:
No problem with cassette tape.

NG → **CASSETTE TAPE IS FAULTY**

OK

3	REPLACE CASSETTE TAPE

(a) Replace the cassette tape with a normal one and check if the same problem occurs again.
(1) Clear the DTC (See page AV-18).
(2) Recheck DTCs and check if the same trouble occurs again.
OK:
Malfunction disappears.

NG → **REPLACE TAPE PLAYER**

OK

CASSETTE TAPE IS FAULTY

DTC	61-43	Head Dirt

DESCRIPTION

DTC No.	DTC Detection Condition	Trouble Area
61-43	Head is dirty	Tape player

INSPECTION PROCEDURE

HINT:
After the inspection is completed, clear the DTCs.

1	CLEAN HEAD

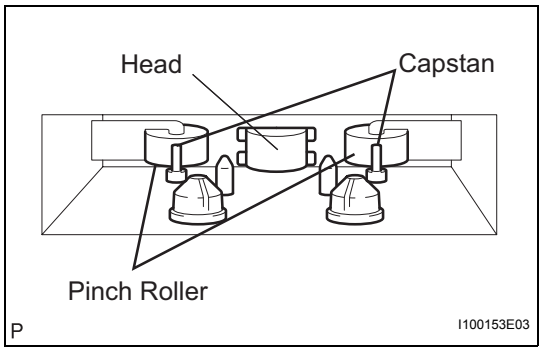

(a) Head cleaning
  (1) Raise the cassette door with your finger. Using a pencil or similar object, push in the guide.
  (2) Using a cleaning pen or cotton applicator soaked in cleaner, clean the head surface, pinch rollers and capstans.
  (3) Clear the DTC (See page AV-18).
  (4) Recheck DTCs and check if the same trouble occurs again.
  OK:
  Malfunction disappears.

NG → **REPLACE TAPE PLAYER**

OK

HEAD WAS DIRTY

DTC	61-44	Device Power Supply Problem

DESCRIPTION

DTC No.	DTC Detection Condition	Trouble Area
61-44	A short or open in the power circuit	Tape player

INSPECTION PROCEDURE

HINT:
After the inspection is completed, clear the DTCs.

1 CLEAR DTC

(a) Clear the DTC (See page AV-18).

NEXT

2 RECHECK DTC

(a) Recheck DTCs and check if the same trouble occurs again.
HINT:
If DTCs are detected frequently, replace the tape player.
OK:
Malfunction disappears.

NG → **REPLACE TAPE PLAYER**

OK

END

DTC	62-40	No Disc

DTC	63-40	No Disc

DESCRIPTION

DTC No.	DTC Detection Condition	Trouble Area
62-40	No disc is inserted.	Radio receiver
63-40	No disc is inserted.	

INSPECTION PROCEDURE

HINT:
After the inspection is completed, clear the DTCs.

1	CHECK RADIO RECEIVER

(a) Check if a disc is inserted.
OK:
A disc is inserted.

OK → **REPLACE RADIO RECEIVER**

NG

END

DTC	63-10	CD Changer Mechanical Error

DTC	62-10	CD Player Mechanical Error

DTC	62-11	CD Insertion and Eject Error

DTC	62-12	CD Reading Abnormal

DTC	63-11	CD Insertion and Eject Error

DTC	63-12	CD Reading Abnormal

DESCRIPTION

DTC No.	DTC Detection Condition	Trouble Area
62-10	A mechanical error in the CD player is detected while the CD is not being inserted or ejected.	Radio receiver
62-11	CD insertion or ejection is failed.	
62-12	CD read problem occurs.	
63-10	A mechanical error in the CD changer is detected while the CD is not being inserted or ejected.	
63-11	CD insertion or ejection is failed.	
63-12	CD read problem occurs.	

AV

INSPECTION PROCEDURE

HINT:
After the inspection is completed, clear the DTCs.

1	REPLACE RADIO RECEIVER

NEXT

END

DTC	63-41	Wrong Disc

DTC	62-41	Wrong Disc

DTC	62-42	Disc cannot be Read

DTC	63-42	Disc cannot be Read

DESCRIPTION

DTC No.	DTC Detection Condition	Trouble Area
62-41	An unsuitable disc is inserted.	• CD • Radio receiver
62-42	The disc cannot be read.	
63-41	An unsuitable disc is inserted.	
63-42	The disc cannot be read.	

INSPECTION PROCEDURE

AV

HINT:
After the inspection is completed, clear the DTCs.

1	CHECK DISC

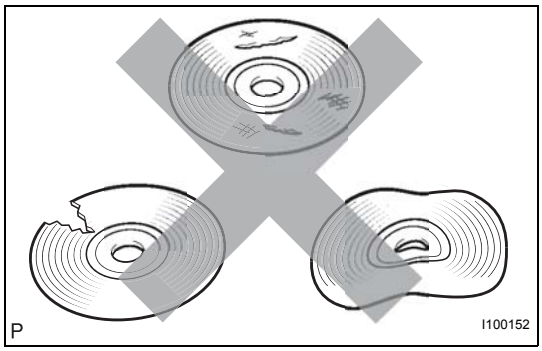

(a) Check that the disc is not deformed or cracked.
OK:
No deformation or cracks on the disc.

NG → **CHANGE DISC**

OK

2	CLEAN DISC

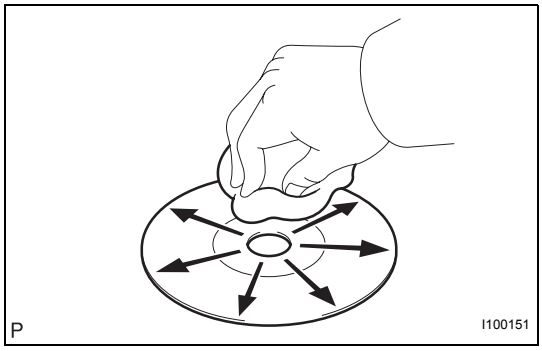

(a) Disc cleaning
(1) If dirt is on the disc surface, wipe it clean with a soft cloth from the inside to the outside in a radial direction
NOTICE:
Do not use conventional record cleaner or anti-static preservative.

NEXT

3	CLEAR DTC

(a) Clear the DTCs (See page AV-18).

NEXT

4	RECHECK DTC

(a) Recheck for DTCs and check if the same trouble occurs again.
OK:
Malfunction disappears.

OK → END

NG

5	REPLACE DISC

(a) Replace the disc with another and recheck.
(1) Replace the disc with another normal one.
(2) Clear the DTCs (See page AV-18).
(3) Recheck for DTCs and check if the same trouble occurs again.
OK:
Malfunction disappears.

NG → REPLACE RADIO RECEIVER

OK

END

DTC	63-43	CD-ROM Abnormal

DTC	62-43	CD-ROM Abnormal

DESCRIPTION

DTC No.	DTC Detection Condition	Trouble Area
62-43	CD-ROM operation is abnormal	• CD • Radio receiver
63-43	CD-ROM operation is abnormal	

INSPECTION PROCEDURE

HINT:
After the inspection is completed, clear the DTCs.

1	CHECK IF A PROPER CD IS INSERTED

(a) Make sure that the CD is an audio CD, and that it is not deformed, flawed, stained, burred, or otherwise defective.
OK:
Normal CD
HINT:
- Translucent or uniquely-shaped CDs cannot be played.
- CDs with adhesive paper labels should not be played.
- For details on playable CDs, refer to the Owner's Manual.

NG → **CD IS FAULTY**

OK

2	REPLACE CD

(a) Replace the CD with another and recheck.
(1) Replace the CD with another normal one.
(2) Clear the DTCs (See page AV-18).
(3) Recheck for DTCs and check if the same trouble occurs again.
OK:
Malfunction disappears.

NG → **REPLACE RADIO RECEIVER**

OK

END

DTC	63-44	CD Abnormal

DTC	62-44	CD Abnormal

DTC	62-48	Excess Current

DTC	62-50	Tray Insertion / Ejection Error

DTC	63-48	Excess Current

DTC	63-50	Tray Insertion / Ejection Error

DESCRIPTION

DTC No.	DTC Detection Condition	Trouble Area
62-44	Operation error in the CD mechanism	Radio receiver
62-48	Excess current is present in the CD player.	
62-50	Malfunction in insertion/ejection system	
63-44	Operation error in the CD mechanism	
63-48	Excess current is present in the CD changer.	
63-50	Malfunction in insertion/ejection system	

AV

INSPECTION PROCEDURE

HINT:
After the inspection is completed, clear the DTCs.

1	CLEAR DTC

(a) Clear the DTCs (See page AV-18).

NEXT

2	RECHECK DTC

(a) Recheck for DTCs and check if the same trouble occurs again.
HINT:
If DTCs are detected frequently, replace the radio receiver.
OK:
Malfunction disappears.

NG → **REPLACE RADIO RECEIVER**

OK

END

DTC	**63-45**	**Eject Error**
DTC	**62-45**	**Eject Error**
DTC	**62-51**	**Elevator Error**
DTC	**62-52**	**Clamp Error**
DTC	**63-51**	**Elevator Error**
DTC	**63-52**	**Clamp Error**

DESCRIPTION

DTC No.	DTC Detection Condition	Trouble Area
62-45	Disc cannot be ejected.	Radio receiver
62-51	Mechanical error occurs during elevator operation.	
62-52	Error occurs in CD player clamp.	
63-45	Magazine cannot be ejected.	
63-51	Mechanical error occurs during elevator operation.	
63-52	Error occurs in CD changer clamp.	

AV

INSPECTION PROCEDURE

HINT:
After the inspection is completed, clear the DTCs.

1	**CHECK RADIO RECEIVER**

(a) Check if a disc can be changed, inserted, or ejected normally.
OK:
Malfunction disappears.

NG → **REPLACE RADIO RECEIVER**

OK

END

DTC	63-46	Scratched / Reversed Disc

DTC	62-46	Scratched / Reversed Disc

DESCRIPTION

DTC No.	DTC Detection Condition	Trouble Area
62-46	Scratches or dirt is found on CD surface or CD is inserted upside down.	• CD • Radio receiver
63-46	Scratches or dirt is found on CD surface or CD is inserted upside down.	

INSPECTION PROCEDURE

HINT:
After the inspection is completed, clear the DTCs.

1	CHECK THAT CD IS INSERTED PROPERLY

(a) Check that the CD is not inserted upside down.
OK:
CD is properly inserted.

NG → **INSERT CD PROPERLY**

OK

2	CHECK DISC

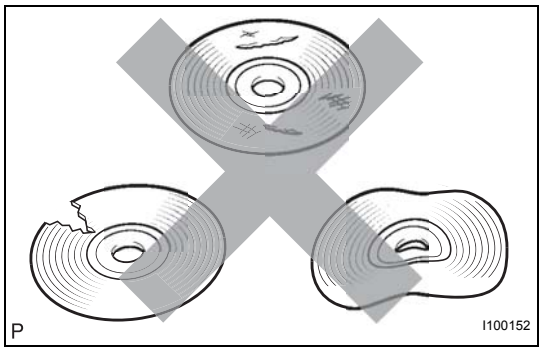

(a) Check that the disc is not deformed or cracked.
OK:
No deformation or cracks on the disc.

NG → **CHANGE DISC**

OK

3	CLEAN DISC

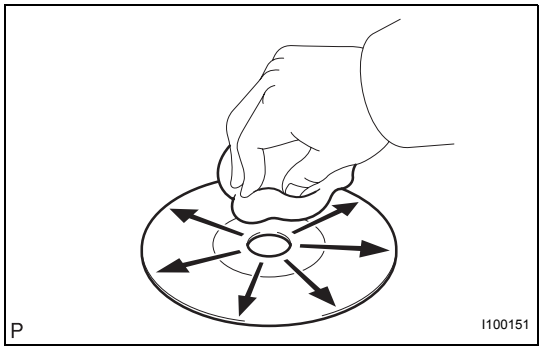

(a) Disc cleaning
(1) If dirt is on the disc surface, wipe it clean with a soft cloth from the inside to the outside in a radial direction
NOTICE:
Do not use a conventional record cleaner or anti-static preservative.

NEXT

4	CLEAR DTC

AV

(a) Clear the DTCs (See page AV-18).

NEXT

5	RECHECK DTC

(a) Recheck for DTCs and check if the same trouble occurs again.
OK:
Malfunction disappears.

OK → **END**

NG

6	REPLACE DISC

(a) Replace the disc with another and recheck.
(1) Replace the disc with another normal one.
(2) Clear the DTCs (See page AV-18).
(3) Recheck for DTCs and check if the same trouble occurs again.
OK:
Malfunction disappears.

NG → **REPLACE RADIO RECEIVER**

OK

END

DTC	63-47	High Temperature

DTC	62-47	High Temperature

DESCRIPTION

DTC No.	DTC Detection Condition	Trouble Area
62-47	Sensor detects that CD unit temperature is high. (Over 80 °C)	Radio receiver
63-47		

INSPECTION PROCEDURE

HINT:
After the inspection is completed, clear the DTCs.

1	CHECK RADIO RECEIVER

(a) Park the vehicle in an cool place.
(b) Check that the temperature of the radio receiver becomes sufficiently low, then start the engine.
(c) DTC clear and recheck.
(d) Check if DTC 63-47 is output.
OK:
DTC 63-47 is not output.

NG → **REPLACE RADIO RECEIVER**

OK

END

Noise Occurs

INSPECTION PROCEDURE

1	CHECK SPEAKER

(a) Check the speaker unit installation condition and that there are no cracks, scratches, deformation, or other failures.
(1) If the speaker is installed incorrectly, proceed to A.
(2) If foreign objects are in the speaker, proceed to B.
(3) If the speaker cone paper is broken, proceed to C.

A	REINSTALL SPEAKER PROPERLY
B	REMOVE FOREIGN OBJECT
C	REPLACE SPEAKER

AV OK

2	CHECK NOISE CONDITIONS

(a) Check the noise condition.
HINT:
The radio has a noise prevention function to reduce noise when listening to the radio. If a loud noise occurs, check whether the ground at the antenna mounting base and the noise prevention unit are installed and wired correctly.

Conditions under which noise occurs	Noise Source
Noise increases when the accelerator pedal is depressed, but stops when the engine is stopped.	Generator
Noise occurs during A/C or heater operation.	Blower motor
Noise occurs when the vehicle accelerates rapidly on an unpaved road or after the ignition switch is turned on.	Fuel pump
Noise occurs when the horn switch is pressed and released or when pressed and held.	Horn
Quiet noise occurs while the engine is running, but stops when the engine is stopped.	Ignition
Noise occurs synchronously with the blink of the turn signal.	Flasher
Noise occurs during window washer operation.	Washer
Noise occurs while the engine is running, and continues even after the engine is stopped.	Water temperature sensor
Noise occurs during wiper operation.	Wiper
Noise occurs when the brake pedal is depressed.	Stop light switch
Others	Static electricity

HINT:
- In the chart's left column, find the situation that matches the customer's complaint. Then, in the right column, find the part that is causing the noise. Check the noise filter on the part.
- To save time and avoid a misdiagnosis, first make sure that the noise is not coming from outside the vehicle.

- Noise should be removed in descending order of loudness.
- Setting the radio to a frequency where no signal is received may make recognition of the noise problem easier.

NG → **REPAIR OR REPLACE NOISE SOURCE**

OK

PROCEED TO NEXT CIRCUIT INSPECTION SHOWN IN PROBLEM SYMPTOMS TABLE

Pressing Power Switch does not Turn on System

INSPECTION PROCEDURE

1	CHECK VEHICLE CONDITION

(a) Check that conditions in the cabin are not likely to cause condensation.
HINT:
This problem occurs when the cabin is humid and the temperature changes rapidly. This may produce condensation, resulting in a short circuit.
OK:
Condensation is not likely to be produced.

NG → **DRY CABIN**

OK

PROCEED TO NEXT CIRCUIT INSPECTION SHOWN IN PROBLEM SYMPTOMS TABLE

No Sound can be Heard from Speakers

INSPECTION PROCEDURE

1	CHECK RADIO RECEIVER

(a) Check radio receiver setting.
  (1) Check that the volume is not set to "0".
  (2) Check that "MUTE" is off.
  OK:
  The volume is not set to "0" and "MUTE" is off.

OK → **END**

NG

PROCEED TO NEXT CIRCUIT INSPECTION SHOWN IN PROBLEM SYMPTOMS TABLE

Sound Quality is Bad Only when CD is Played (Volume is Too Low)

INSPECTION PROCEDURE

1	**REPLACE CD**

(a) Replace the CD with another one and recheck.
(1) Check if the problem recurs using another CD.
OK:
Malfunction disappears.

NG → **REPLACE RADIO RECEIVER**

OK

CD IS FAULTY

Cassette Tape cannot be Ejected

INSPECTION PROCEDURE

1 CHECK OPERATION

(a) Press the cassette tape EJECT switch of the radio receiver for 2 seconds or more and check that the cassette tape is ejected.
OK:
Cassette tape is ejected.

NG → **REPLACE TAPE PLAYER**

OK

2 CHECK CASSETTE TAPE

(a) Check that the ejected cassette tape does not have a peeling label, cassette body deformation or other problems.
OK:
No problems with cassette tape.

NG → **CASSETTE TAPE IS FAULTY**

OK

3 REPLACE CASSETTE TAPE

(a) Replace the cassette tape with a normal one and check that the malfunction disappears.
OK:
Malfunction disappears.

NG → **PROCEED TO NEXT CIRCUIT INSPECTION SHOWN IN PROBLEM SYMPTOMS TABLE**

OK

CASSETTE TAPE IS FAULTY

Cassette Tape cannot be Inserted or Played

INSPECTION PROCEDURE

1	CHECK FOREIGN OBJECT

(a) Check that the cassette tape player is free of foreign objects.
OK:
No foreign objects.

NG → **REMOVE FOREIGN OBJECT**

OK

2	CHECK CASSETTE TAPE

(a) Check that the cassette tape is a normal tape for recording sounds.
OK:
Cassette tape is normal.

NG → **CASSETTE TAPE IS FAULTY**

OK

3	CHECK TAPE PLAYER

(a) Replace the cassette tape with a normal one and check that the malfunction disappears.
OK:
Malfunction disappears.

NG → **REPLACE TAPE PLAYER**

OK

CASSETTE TAPE IS FAULTY

CD cannot be Ejected

INSPECTION PROCEDURE

1	CHECK OPERATION

(a) Press the CD EJECT switch of the radio receiver for 2 seconds or more and check that the CD is ejected.
OK:
CD is ejected.

NG → **PROCEED TO NEXT CIRCUIT INSPECTION SHOWN IN PROBLEM SYMPTOMS TABLE**

OK

2	REPLACE CD

(a) Insert another CD and check if it is ejected.
OK:
CD is ejected.

NG → **PROCEED TO NEXT CIRCUIT INSPECTION SHOWN IN PROBLEM SYMPTOMS TABLE**

OK

CD IS FAULTY

CD cannot be Inserted / Played or CD is Ejected Right After Insertion

INSPECTION PROCEDURE

1	CHECK IF A PROPER CD IS INSERTED

(a) Make sure that the CD is a normal audio CD, and that it is not deformed, flawed, stained, burred or has any other defects.
OK:
Normal audio CD.
HINT:
- Translucent or uniquely-shaped CDs cannot be played.
- CDs for personal computers (with music recorded in) and CD-Rs cannot be played.

NG → **CD IS FAULTY**

AV

OK

2	CHECK THAT CD IS INSERTED PROPERLY

(a) Check whether or not the CD is inserted upside down.
OK:
CD is properly inserted.

NG → **SET CD PROPERLY**

OK

3	CHECK CD

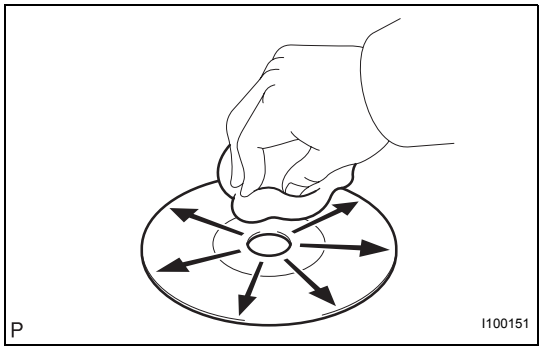

(a) Clean the disc by wiping it with a soft cloth from inside to outside in a radial direction.
OK:
Malfunction disappears.
NOTICE:
Do not use a conventional record cleaner or anti-static preservative.

NG → **Go to step 4**

OK

CD WAS DIRTY

4	REPLACE CD

(a) Replace the CD with a normal one and check that the malfunction disappears.
OK:
Malfunction disappears.

NG → **PROCEED TO NEXT CIRCUIT INSPECTION SHOWN IN PROBLEM SYMPTOMS TABLE**

OK

CD IS FAULTY

CD Sound Skips

INSPECTION PROCEDURE

HINT:

- The sound may skip when driving on an unpaved road.
- Sudden temperature changes in the cabin will cause condensation inside the CD player and prevent it from playing.

1	CHECK CD

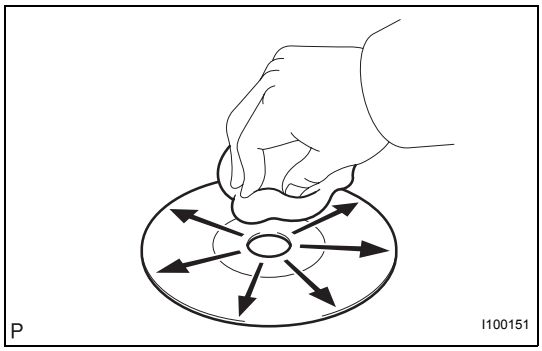

(a) Check the CD.
OK:
The CD is clean.
HINT:
If dirt is on the CD surface, wipe it clean with a soft cloth from inside to outside in a radial direction.
NOTICE:
Do not use a conventional record cleaner or anti-static preservative.

NG → **CLEAN CD**

OK

2	CHECK CD

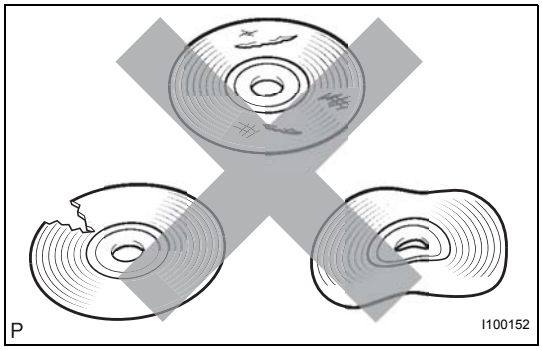

(a) Check that the CD is not deformed or cracked.
OK:
No deformation or cracks on the CD.

NG → **CD IS FAULTY**

OK

3	CHECK OPERATION USING ANOTHER CD

(a) Check using another CD.
(1) Check if the problem recurs using another CD.
OK:
The problem does not occur.

OK → **CD IS FAULTY**

NG

4	CHECK RADIO RECEIVER

(a) Check the radio receiver installation condition.
(1) Check that the radio receiver is properly installed.
OK:
Radio receiver is properly installed.

NG → **REINSTALL RADIO RECEIVER PROPERLY**

OK

PROCEED TO NEXT CIRCUIT INSPECTION SHOWN IN PROBLEM SYMPTOMS TABLE

Radio Broadcast cannot be Received or Poor Reception

INSPECTION PROCEDURE

1	CHECK RADIO RECEIVER

(a) Check the radio's automatic station search function.
(1) Check the radio's automatic station search function by activating it.
OK:
The radio's automatic station search function works properly.

OK → **REPLACE RADIO RECEIVER**

NG

2	CHECK OPTIONAL COMPONENTS

AV

(a) Check optional components (sun-shade film, telephone antenna, etc.).
(1) Check if any optional components, such as sun-shade film or telephone antenna that may decrease reception capacity, are installed.
OK:
Optional components are installed.
NOTICE:
Do not remove any optional components installed by the customer without his or her consent.

OK → **REMOVE OPTIONAL COMPONENTS (SEE NOTICE ABOVE)**

NG

3	CHECK RADIO RECEIVER

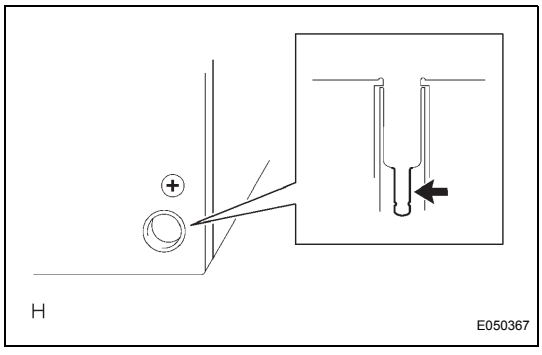

(a) Preparation for check
(1) Remove the antenna plug from the radio receiver.
(b) Check for noise
(1) Turn the ignition switch on (ACC) with the radio receiver connector connected.
(2) Turn the radio on and put into AM mode.
(3) Place a screwdriver, thin wire, or other metal object on the radio receiver's antenna jack and check that noise can be heard from the speaker.
OK:
Noise occurs.

NG → **REPLACE RADIO RECEIVER**

OK

4	CHECK GLASS ANTENNA

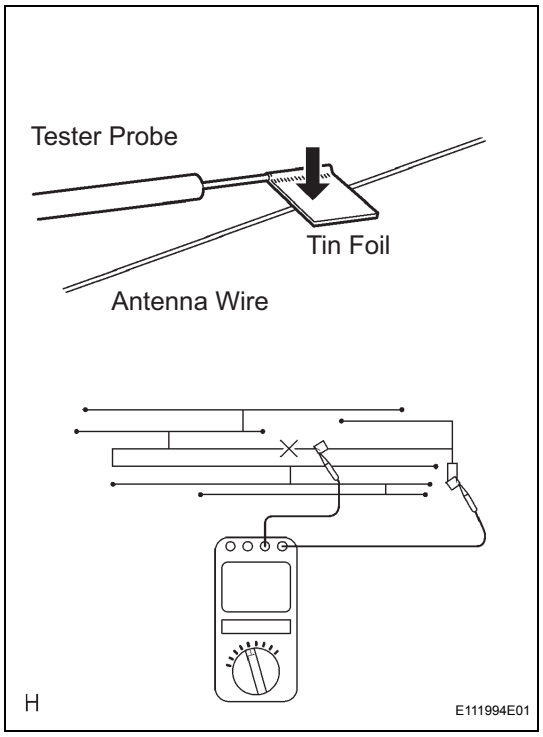

(a) Check for continuity of the antenna.
HINT:
Check for continuity at the center of each antenna wire as shown in the illustration.
NOTICE:
When cleaning the glass, wipe it in the direction of the wire with a soft dry cloth. Take care not to damage the wire. Do not use detergents or glass cleaners with abrasive ingredients. When measuring voltage, wrap a piece of tin foil around the tip of the negative probe and press the foil against the wire with your finger, as shown in the illustration.
OK:
There is continuity in the antenna.

NG → **REPAIR GLASS ANTENNA**

AV

OK

5	CHECK ANTENNA CORD

(a) Remove the antenna plug of the radio receiver and antenna.
(b) Measure the resistance between the antenna and radio receiver to check for an open circuit in the antenna cord.
Standard resistance:
Below 1 Ω
(c) Measure the resistance between the antenna cord and body ground to check for a short circuit in the antenna cord.
Standard resistance:
10 kΩ or higher

NG → **REPLACE ANTENNA CORD**

OK

6	REPLACE AMPLIFIER ANTENNA

(a) Replace the amplifier antenna and check if radio broadcasts can be received normally.
OK:
Radio broadcasts can be received.

OK → **END**

NG

REPLACE RADIO RECEIVER

Sound Quality is Bad Only when Playing Tape

INSPECTION PROCEDURE

1 REPLACE CASSETTE TAPE

(a) Replace the cassette tape with another one and recheck.
  (1) Replace the cassette tape with another normal one to check if the same trouble occurs again.
  OK:
  Malfunction disappears.

OK → **CASSETTE TAPE IS FAULTY**

NG

2 CHECK FOREIGN OBJECT

(a) Check for foreign objects.
  (1) Check that there are no foreign objects or defects in the cassette tape player.
  OK:
  No foreign objects or defects.

NG → **REMOVE FOREIGN OBJECT**

OK

3 CLEAN HEAD

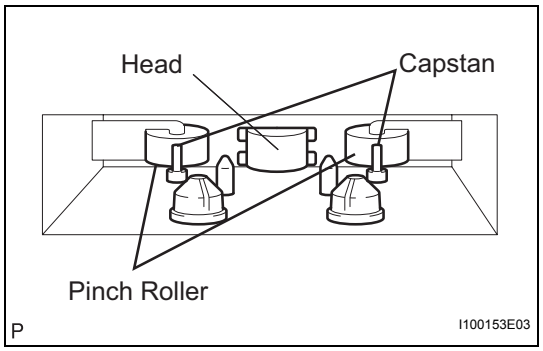

(a) Head cleaning
  (1) Raise the cassette door with your finger. Using a pencil or similar object, push in the guide.
  (2) Using a cleaning pen or cotton applicator soaked in cleaner, clean the head surface, pinch rollers and capstans.
  (3) Check if the same trouble occurs again.
  OK:
  Malfunction disappears.

NG → **REPLACE TAPE PLAYER**

OK

HEAD WAS DIRTY

AV

Tape is Tangled due to Incorrect Tape Speed or Auto-Reverse Malfunction

INSPECTION PROCEDURE

1	CHECK FOREIGN OBJECT

(a) Check for any foreign objects.
(1) Check that there are no foreign objects or defects in the cassette tape player.
OK:
No foreign objects or defects.

NG → **REMOVE FOREIGN OBJECT**

OK ↓

AV

2	REPLACE CASSETTE TAPE (90 MIN. OR LESS)

(a) Check the cassette tape player using a normal cassette tape.
(1) Replace the cassette tape with another normal one (90 minutes or less) to see if the same trouble occurs again.
OK:
Malfunction disappears.

OK → **CASSETTE TAPE IS FAULTY**

NG ↓

3	CLEAN HEAD

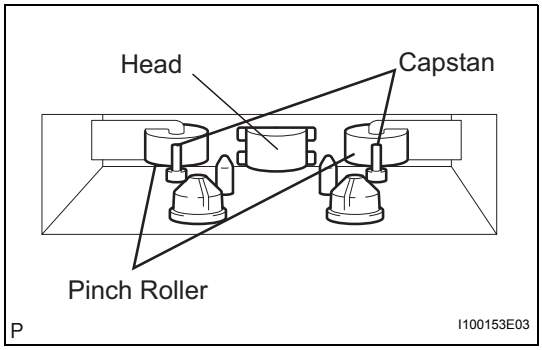

(a) Head cleaning
(1) Raise the cassette door with your finger. Using a pencil or similar object, push in the guide.
(2) Using a cleaning pen or cotton applicator soaked in cleaner, clean the head surface, pinch rollers and capstans.
(3) Check if the same trouble occurs again.
OK:
Malfunction disappears.

NG → **REPLACE TAPE PLAYER**

OK ↓

HEAD WAS DIRTY

Poor Sound Quality in All Modes (Low Volume)

INSPECTION PROCEDURE

1	CHECK AUDIO SETTINGS

(a) Set "BASS", "MID" and "TREB" to the initial values and check that sound is normal.
OK:
Malfunction disappears.

OK → END

NG

2	COMPARE WITH ANOTHER VEHICLE OF SAME MODEL

(a) Compare with another vehicle of the same model.
(1) Compare with another vehicle of the same model which does not have trouble to see if there is any difference in the sound quality.
OK:
No difference is found.

OK → END

NG

PROCEED TO NEXT CIRCUIT INSPECTION SHOWN IN PROBLEM SYMPTOMS TABLE

Steering Pad Switch Circuit

DESCRIPTION

This circuit sends an operation signal from the steering pad switch to the radio receiver.
If there is an open in the circuit, the audio system cannot be operated by the steering pad switch.
If there is a short in the circuit, the resulting condition is the same as if the switch were continuously depressed. Therefore, the radio receiver cannot be operated by the steering pad switch, and the radio receiver itself cannot function.

WIRING DIAGRAM

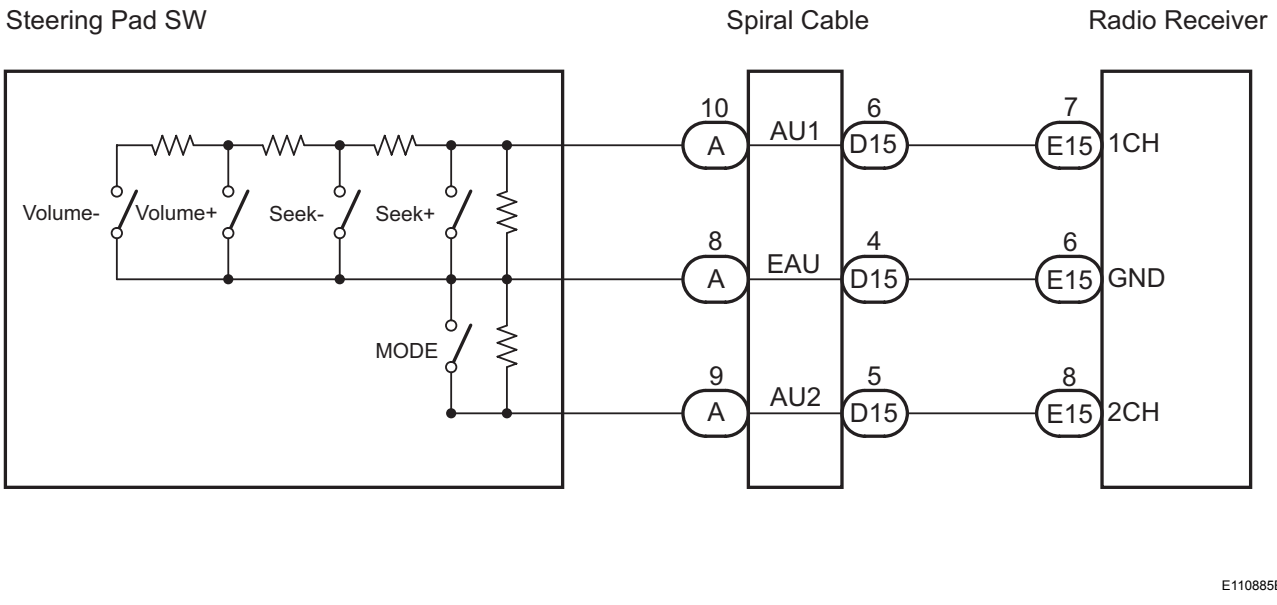

INSPECTION PROCEDURE

NOTICE:

The vehicle is equipped with an SRS (Supplemental Restraint System), such as airbags. Before servicing (including removal or installation of parts), be sure to read the precautionary notice for the Supplemental Restraint System (See page RS-1).

1	INSPECT RADIO RECEIVER

Wire Harness View (12 Speaker):

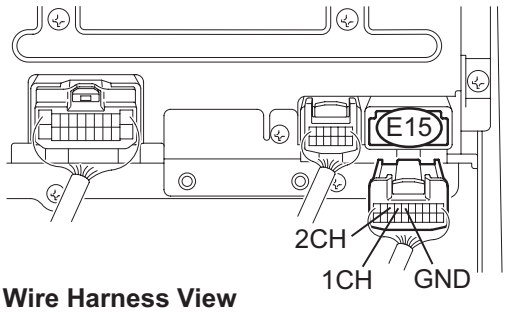

Wire Harness View

(9 Speaker, 1 CD Type):

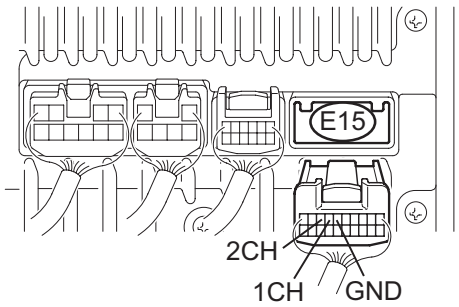

Wire Harness View

(9 Speaker, 6 CD Type):

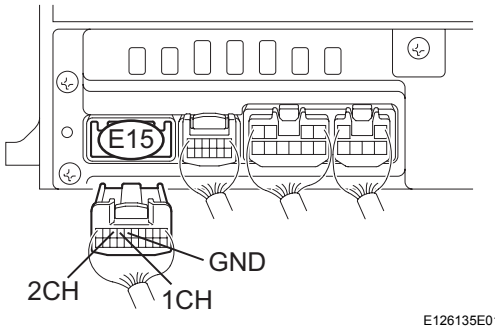

(a) Disconnect the radio receiver E15 connector.
(b) Measure the resistance according to the value(s) in the table below.

Standard resistance

Tester connection	Condition	Specified condition
1CH - GND	No switch is pushed	Approx. 100 kΩ
1CH - GND	SEEK+ switch: push	Approx. 0 Ω
1CH - GND	SEEK- switch: push	Approx. 0.3 kΩ
1CH - GND	VOL+ switch: push	Approx. 1 kΩ
1CH - GND	VOL- switch: push	Approx. 3.2 kΩ
2CH - GND	No switch is pushed	Approx. 100 kΩ
2CH - GND	MODE switch: push	Approx. 0 Ω

NG → **Go to step 2**

OK

PROCEED TO NEXT CIRCUIT INSPECTION SHOWN IN PROBLEM SYMPTOMS TABLE

2	INSPECT STEERING PAD SWITCH ASSEMBLY

(a) Disconnect the steering pad switch connector.

AV

Steering Pad Switch Connector Front View:

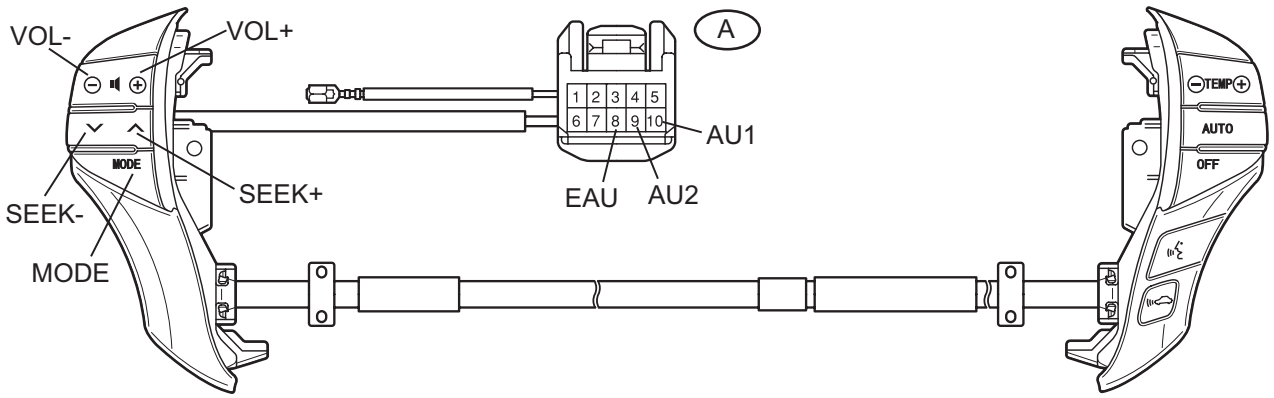

(b) Measure the resistance according to the value(s) in the table below.

Standard resistance

AV

Tester connection	Condition	Specified condition
AU1 - EAU	No switch is pushed	Approx. 100 kΩ
AU1 - EAU	SEEK+ switch: push	Approx. 0 Ω
AU1 - EAU	SEEK- switch: push	Approx. 0.3 kΩ
AU1 - EAU	VOL+ switch: push	Approx. 1 kΩ
AU1 - EAU	VOL- switch: push	Approx. 3.2 kΩ
AU2 - EAU	No switch is pushed	Approx. 100 kΩ
AU2 - EAU	MODE switch: push	Approx. 0 Ω

NG → **REPLACE STEERING PAD SWITCH ASSEMBLY**

OK

3	INSPECT SPIRAL CABLE

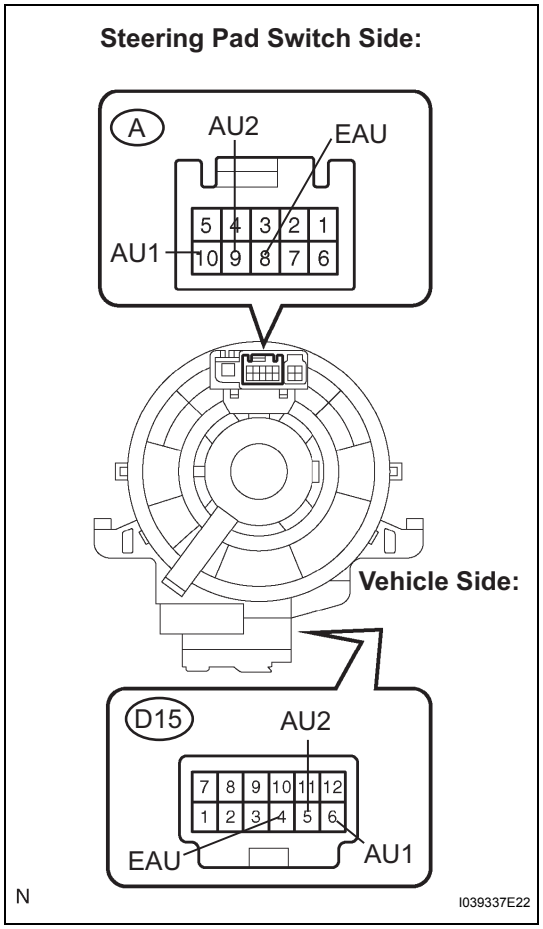

(a) Disconnect the spiral cable connector.
(b) Measure the resistance according to the value(s) in the table below.

Standard resistance

Tester connection	Condition	Specified condition
EAU - EAU	Always	Below 1 Ω
AU1 - AU1	Always	Below 1 Ω
AU2 - AU2	Always	Below 1 Ω

OK → **REPAIR OR REPLACE HARNESS OR CONNECTOR (SPIRAL CABLE - RADIO RECEIVER)**

NG

REPLACE SPIRAL CABLE

AV

Illumination Circuit

DESCRIPTION

Receiving a dimmer signal from the light control switch, the radio receiver dims the display and illuminates the panel switches and the steering pad switch.

WIRING DIAGRAM

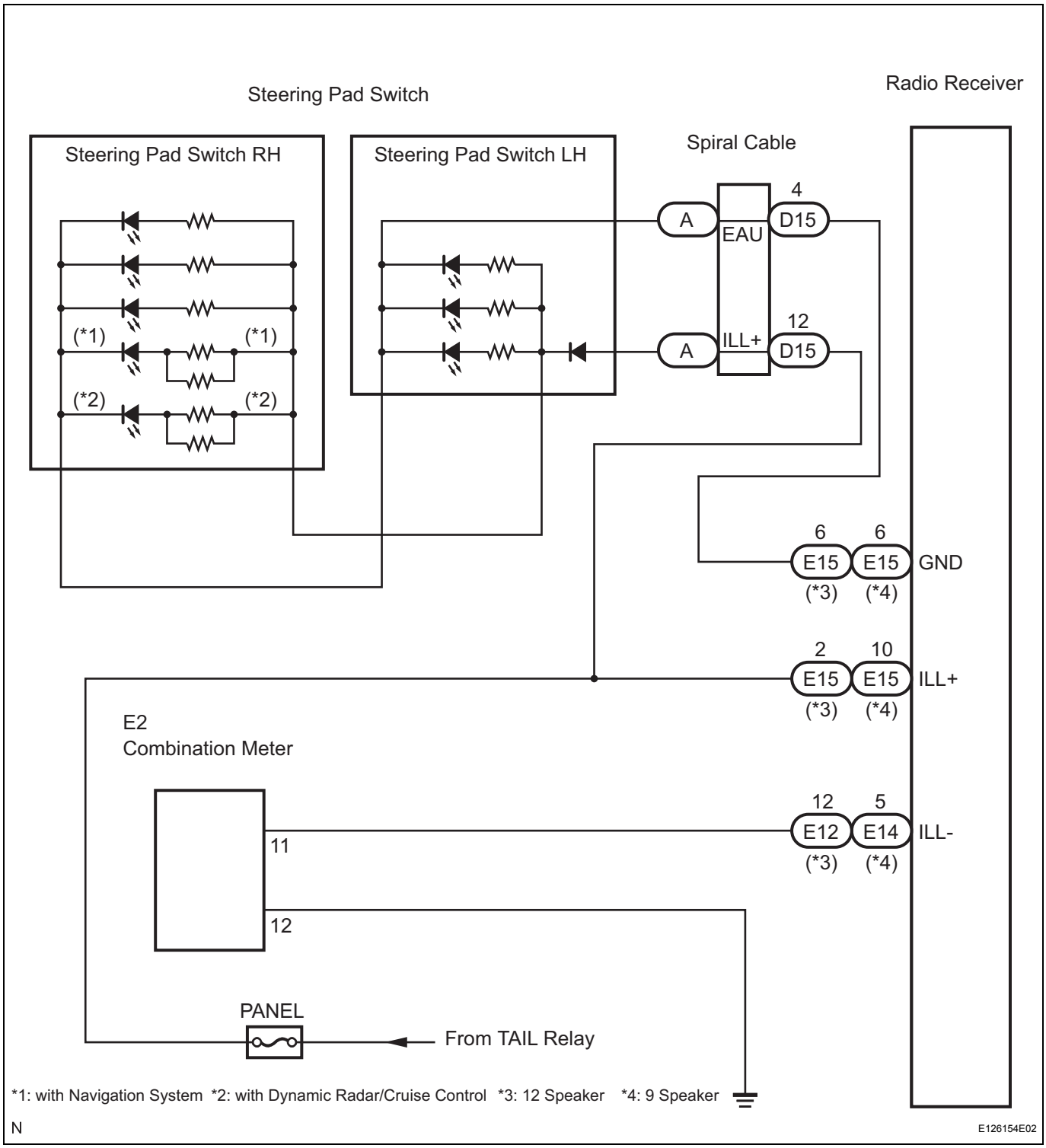

INSPECTION PROCEDURE

NOTICE:

The vehicle is equipped with an SRS (Supplemental Restraint System), such as airbags. Before servicing (including removal or installation of parts), be sure to read the precautionary notice for the Supplemental Restraint System (See page RS-1).

1 CHECK ILLUMINATION

(a) Check if the illumination for the radio receiver, steering pad switch, cigarette lighter, glove box light or others (transmission control SW, etc.) comes on when the light control switch is turned to the HEAD or TAIL position.

Result

Result	Proceed to
Illumination comes on for all components except steering pad switch.	A
Illumination comes on for all components except radio receiver.	B
No illumination comes on (radio receiver , steering pad switch, cigarette lighter, glove box light, transmission control switch).	C
No illumination comes on for all components except glove box light.	D

B → Go to step 6

C → GO TO LIGHTING SYSTEM

D → GO TO COMBINATION METER SYSTEM

A

2 CHECK HARNESS AND CONNECTOR (SPIRAL CABLE - BATTERY)

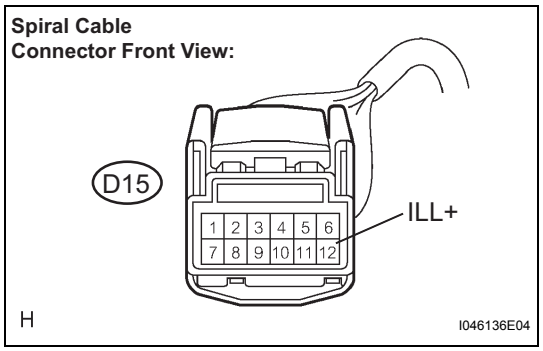

(a) Disconnect the spiral cable connector.

(b) Measure the voltage according to the value(s) in the table below.

Standard voltage

Tester connection	Condition	Specified condition
ILL+ - Body ground	Light control SW TAIL or HEAD	10 to 14 V

NG → REPAIR OR REPLACE HARNESS OR CONNECTOR

OK

3 INSPECT STEERING PAD SWITCH ASSEMBLY

(a) Disconnect the steering pad switch connector.

AV

Steering Pad Switch Connector Front View:

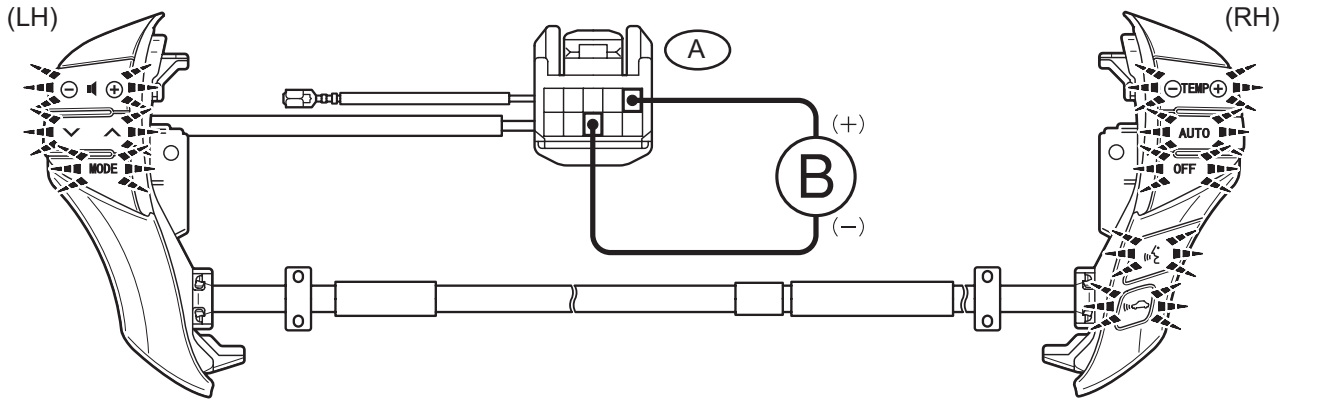

(b) Connect the positive (+) lead to terminal ILL+ and the negative (-) lead to terminal EAU of the steering pad switch connector.

(c) Check if the illumination for the steering pad switch comes on.

OK:

Illumination for the steering pad switch comes on.

AV

NG → **REPLACE STEERING PAD SWITCH ASSEMBLY**

OK

4	**INSPECT SPIRAL CABLE**

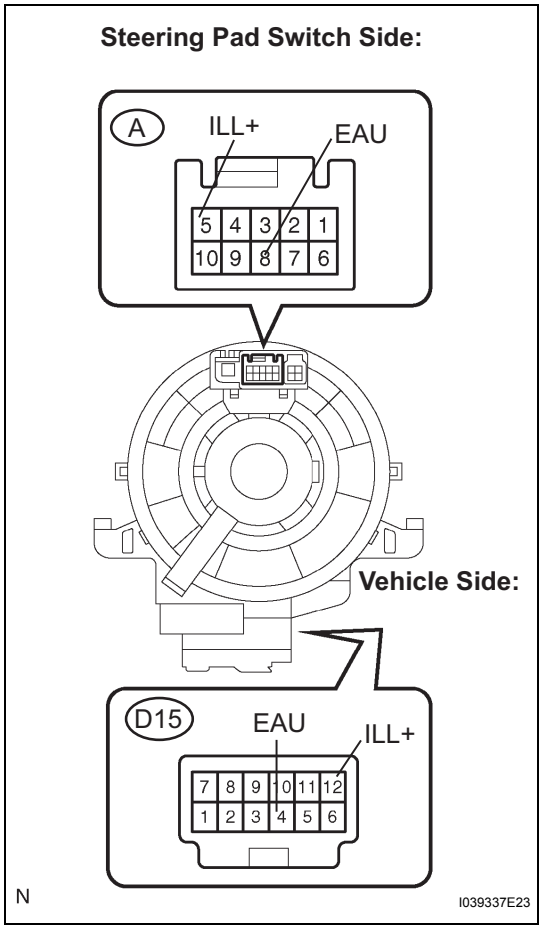

(a) Disconnect the spiral cable connector.
(b) Measure the resistance according to the value(s) in the table below.

Standard resistance

Tester connection	Condition	Specified condition
EAU - EAU	Always	Below 1 Ω
ILL+ - ILL+	Always	Below 1 Ω

NG → **REPLACE SPIRAL CABLE**

OK

AV

5	CHECK HARNESS AND CONNECTOR (SPIRAL CABLE - RADIO RECEIVER)

Radio Receiver (12 Speaker)
Wire Harness View:

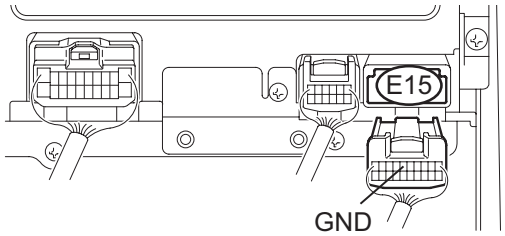

Radio Receiver (9 Speaker, 1 CD Type)
Wire Harness View:

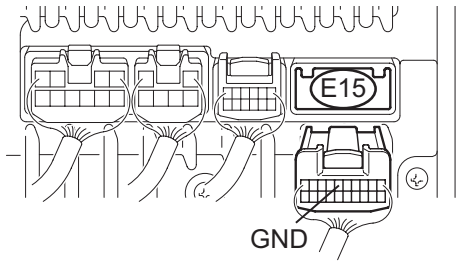

Radio Receiver (9 Speaker, 6 CD Type)
Wire Harness View:

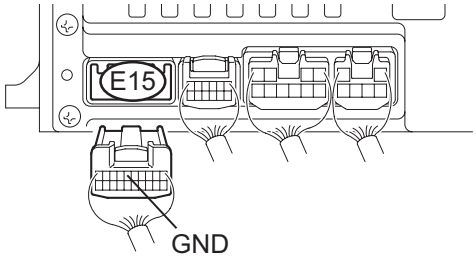

Spiral Cable Connector Front View:

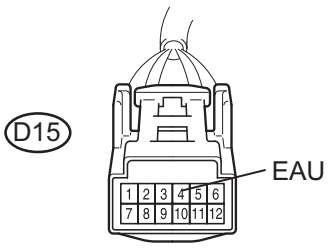

P

E126138E01

(a) Disconnect the radio receiver E15 connector.
(b) Measure the resistance according to the value(s) in the table below.

Standard resistance

Tester connector	Condition	Specified condition
GND - EAU	Always	Below 1 Ω
GND - Body ground	Always	10 kΩ or higher

NG → **REPAIR OR REPLACE HARNESS OR CONNECTOR**

OK

REPLACE RADIO RECEIVER

6 INSPECT RADIO RECEIVER

Wire Harness View (12 Speaker):

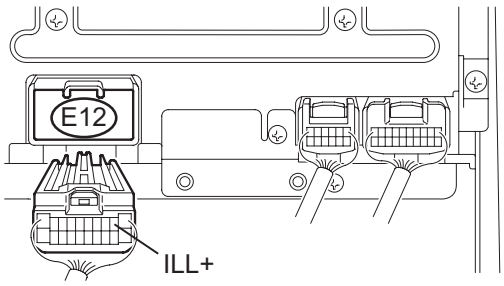

Wire Harness View

(9 Speaker, 6 CD Type):

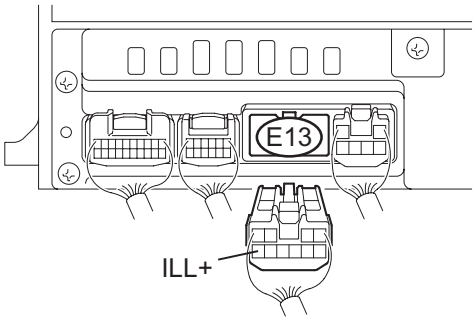

Wire Harness View

(9 Speaker, 1 CD Type):

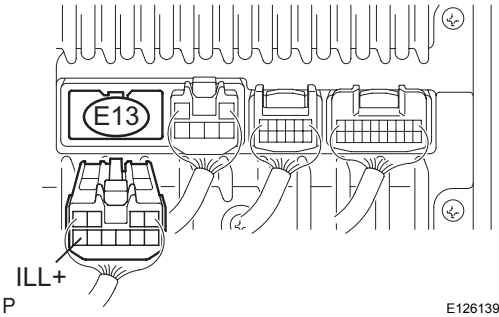

P E126139E01

(a) Disconnect the radio receiver E12 or E13 connector.
(b) Measure the voltage according to the value(s) in the table below.

Standard voltage

Tester connector	Condition	Specified condition
ILL+ - Body ground	Light control switch TAIL or HEAD	10 to 14 V

NG → **REPAIR OR REPLACE HARNESS OR CONNECTOR**

OK

AV

7	CHECK HARNESS AND CONNECTOR (RADIO RECEIVER - COMBINATION METER)

Radio Receiver (12 Speaker)
Wire Harness View:

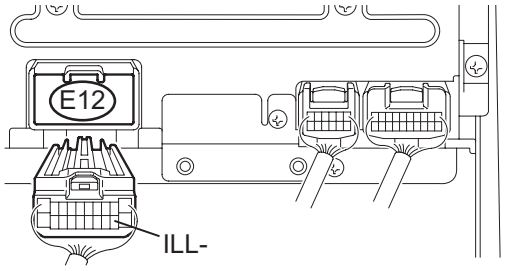

Radio Receiver (9 Speaker, 6 CD Type)
Wire Harness View:

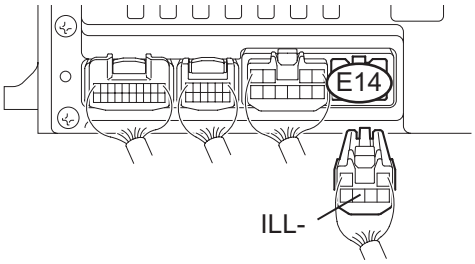

Radio Receiver (9 Speaker, 1 CD Type)
Wire Harness View:

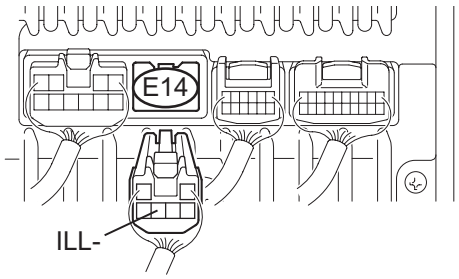

Combination Meter Wire Harness View:

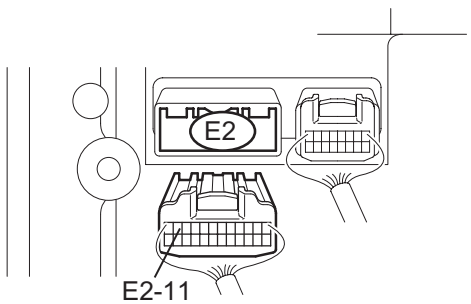

P

E126140E01

(a) Disconnect the combination meter E2 connector.
(b) Measure the resistance according to the value(s) in the table below.

Standard resistance

Tester connector	Condition	Specified condition
ILL- - E2-11	Always	Below 1 Ω

NG → **REPAIR OR REPLACE HARNESS OR CONNECTOR**

OK

GO TO COMBINATION METER SYSTEM

Speaker Circuit

DESCRIPTION

The sound signal that has been amplified by the stereo component amplifier or radio receiver is sent to the speakers from the stereo component amplifier or radio receiver through this circuit.
If there is a short in this circuit, the stereo component amplifier detects it and stops output to the speakers. Thus sound cannot be heard from the speakers even if there is no malfunction in the stereo component amplifier or speakers.
There are two cases when a short is detected.

- When a short is detected in the rear No. 2 speaker circuit, sound cannot be heard only from the rear No. 2 speaker.
- When a short is detected in any circuit other than the rear No. 2 speaker circuit, sound cannot be heard from all speakers including the rear No. 2 speaker.

WIRING DIAGRAM

9 Speaker:

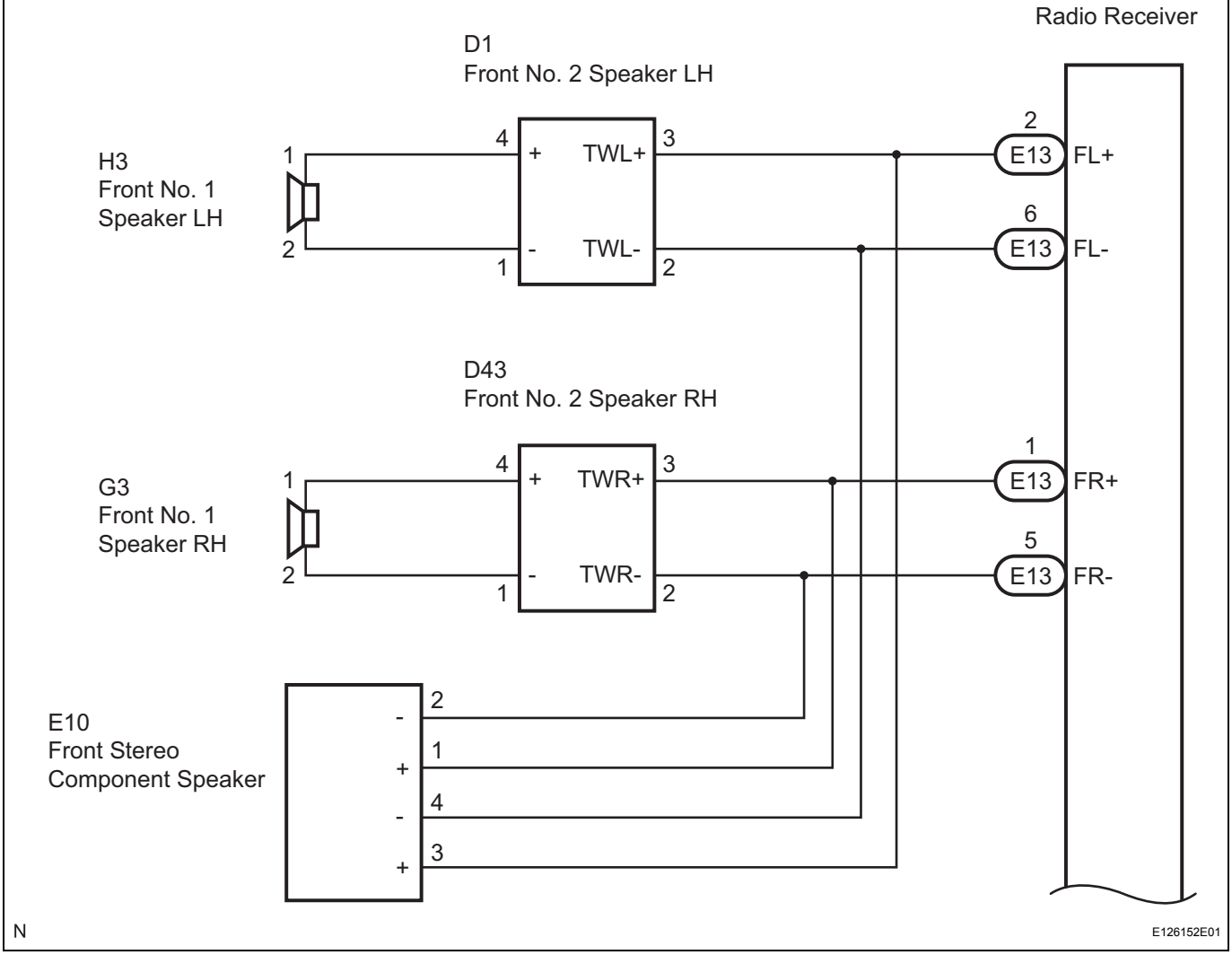

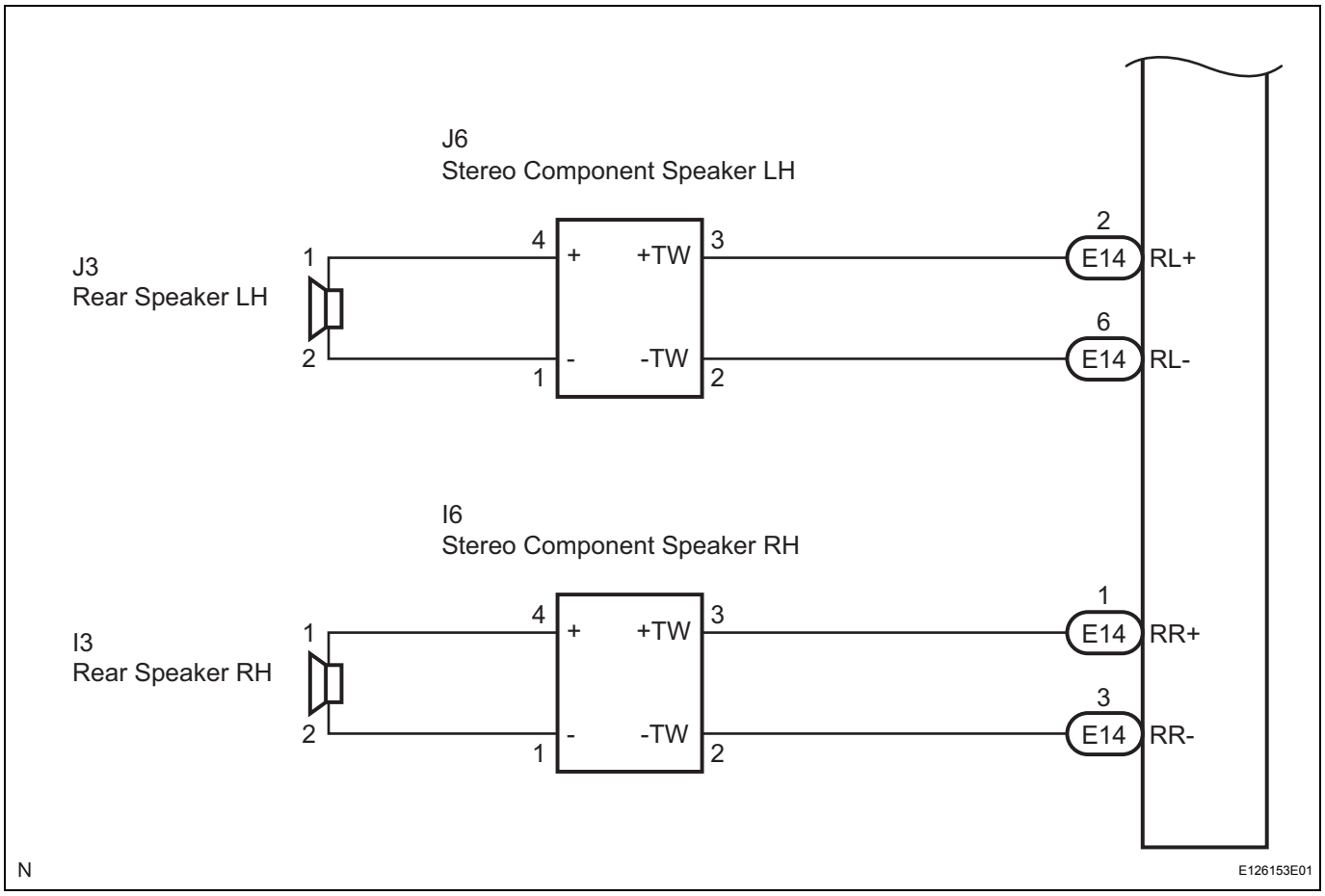
J6
Stereo Component Speaker LH
J3
Rear Speaker LH
1
2
4
+
+TW
3
-
-TW
1
2
2
E14
RL+
6
E14
RL-
I6
Stereo Component Speaker RH
I3
Rear Speaker RH
1
2
4
+
+TW
3
-
-TW
1
2
1
E14
RR+
3
E14
RR-
N
E126153E01

AV

12 Speaker:

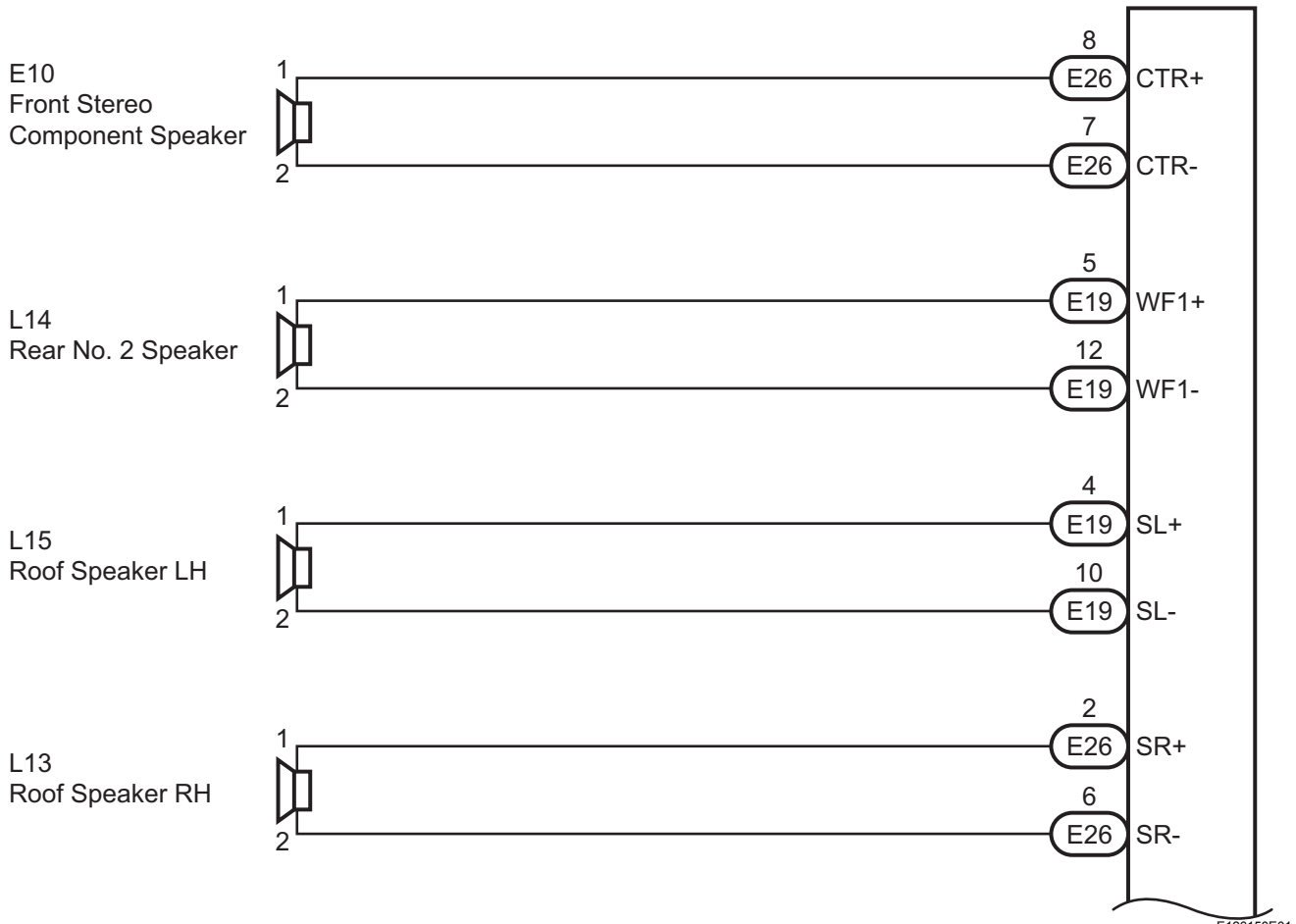

AV

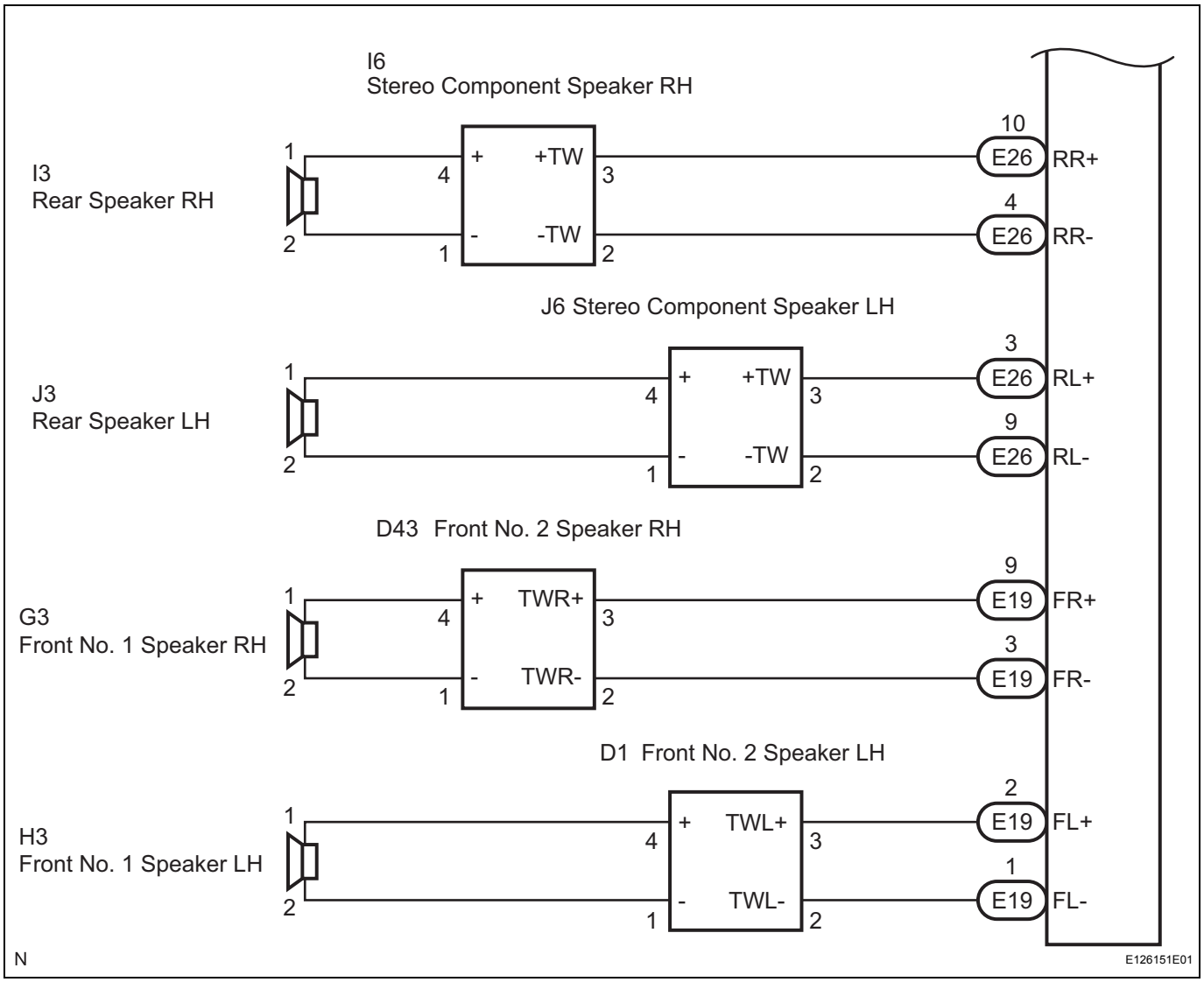
I6
Stereo Component Speaker RH
I3
Rear Speaker RH
+TW
-TW
10
E26
RR+
4
E26
RR-
J6 Stereo Component Speaker LH
J3
Rear Speaker LH
3
E26
RL+
9
E26
RL-
D43 Front No. 2 Speaker RH
G3
Front No. 1 Speaker RH
TWR+
TWR-
9
E19
FR+
3
E19
FR-
D1 Front No. 2 Speaker LH
H3
Front No. 1 Speaker LH
TWL+
TWL-
2
E19
FL+
1
E19
FL-
N
E126151E01

AV

INSPECTION PROCEDURE

1	CHECK HARNESS AND CONNECTOR

Radio Receiver (9 Speaker, 1 CD Type) Wire Harness View:

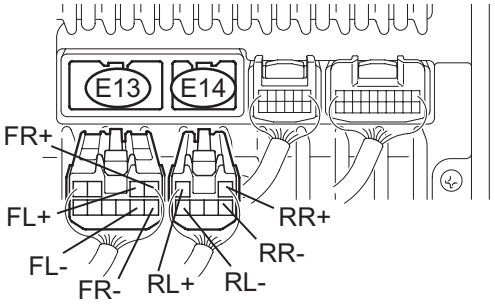

Radio Receiver (9 Speaker, 6 CD Type) Wire Harness View:

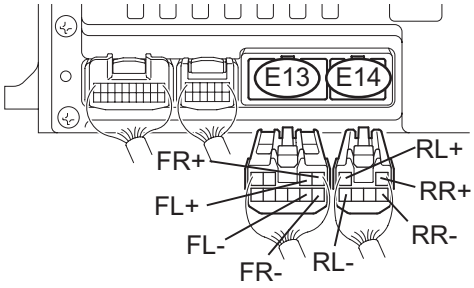

Stereo Component Amplifier (12 Speaker) Wire Harness View:

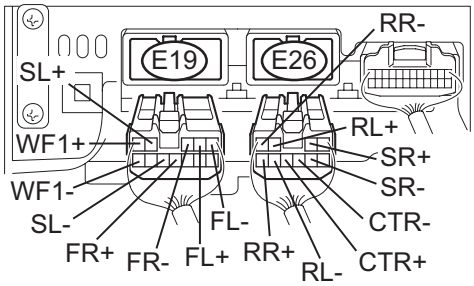

Roof Speaker (12 Speaker) Connector Front View:

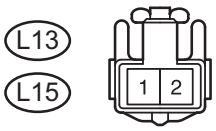

P

E126141E01

(a) Disconnect the connectors shown in the illustration on the left from the stereo component amplifier or the radio receiver and speakers.

(b) Measure the resistance between speakers or between a speaker and the stereo component amplifier or the radio receiver to check for an open circuit in the wire harness.
Standard resistance:
Below 1 Ω

AV

Front No. 2 Speaker, Stereo Component Speaker Connector Front View:

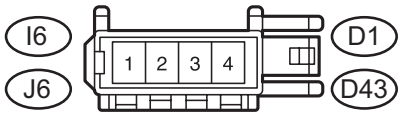

Front No. 1 Speaker, Rear No. 2 Speaker (*1), Rear speaker Connector Front View:

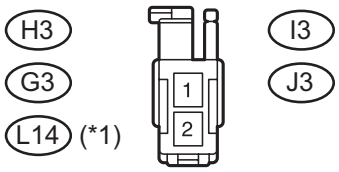

*1: 12 Speaker

Front Stereo Component Speaker Connector Front View:

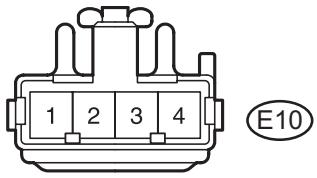

P E126142E01

(c) Measure the resistance between body ground and the stereo component amplifier to check for a short circuit in the wire harness.
Standard resistance:
10 kΩ or higher

NG → **REPAIR OR REPLACE HARNESS OR CONNECTOR**

OK

2	INSPECT FRONT NO. 1 SPEAKER

(a) Resistance check
(1) Measure the resistance between the terminals of the speakers.
Standard resistance:
9 Speaker:
Approximately 4 Ω
12 Speaker:
1.8 to 2.6 Ω

NG → **REPLACE FRONT NO. 1 SPEAKER**

AV

OK

3	INSPECT FRONT NO. 2 SPEAKER

(a) Check that the malfunction disappears when another speaker in good condition is installed.
OK:
Malfunction disappears.
HINT:
- Connect all the connectors to the speakers.
- When there is a possibility that either the right or left front speaker is defective, inspect it by interchanging the right one with the left one.

OK → **REPLACE FRONT NO. 2 SPEAKER**

NG

AV

4	INSPECT REAR SPEAKER

(a) Resistance check
(1) Measure the resistance between the terminals of the speaker.
Standard resistance:
9 Speaker:
3.2 to 4.8 Ω
12 Speaker:
1.8 to 2.6 Ω

NG → **REPLACE REAR SPEAKER**

OK

5	INSPECT STEREO COMPONENT SPEAKER

(a) Check that the malfunction disappears when another speaker in good condition is installed.
OK:
Malfunction disappears.
HINT:
- Connect all the connectors to the speakers.
- When there is a possibility that either the right or left front speaker is defective, inspect it by interchanging the right one with the left one.

OK → **REPLACE STEREOÅ@COMPONENT SPEAKER**

NG

6 INSPECT FRONT STEREO COMPONENT SPEAKER

9 Speaker:

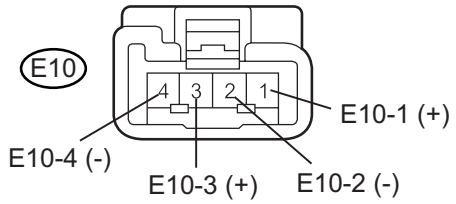

12 Speaker:

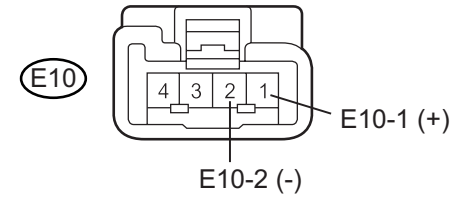

H

E126143E01

(a) Resistance check
(1) Measure the resistance between the terminals of the front stereo component speaker.
Standard resistance (9 Speaker)

Tester Connection	Condition	Specified Condition
E10-1 - E10-2	Always	Approx. 40 Ω
E10-3 - E10-4	Always	Approx. 40 Ω

Standard resistance (12 Speaker)

Tester Connection	Condition	Specified Condition
E10-1 - E10-2	Always	1.5 to 2.1 Ω

NG → **REPLACE FRONT STEREO COMPONENT SPEAKER**

OK

7 INSPECT REAR NO. 2 SPEAKER

HINT:
If the vehicle is not equipped with a rear No. 2 speaker, proceed to the next step.

(a) Resistance check
(1) Measure the resistance between the terminals of the speaker.
Standard resistance:
1.8 to 2.6 Ω

NG → **REPLACE REAR NO. 2 SPEAKER**

OK

8 INSPECT ROOF SPEAKER

HINT:
If the vehicle is not equipped with a roof speaker, proceed to the next step.

AV

(a) Resistance check
(1) Measure the resistance between the terminals of the speaker.
Standard resistance:
1.5 to 2.1 Ω

NG → **REPLACE ROOF SPEAKER**

OK

PROCEED TO NEXT CIRCUIT INSPECTION SHOWN IN PROBLEM SYMPTOMS TABLE

Sound Signal Circuit between Radio Receiver and Stereo Component Amplifier

DESCRIPTION

The radio receiver sends a sound signal to the stereo component amplifier through this circuit.
The sound signal that has been sent is amplified by the stereo component amplifier, and then sent to the speakers. If there is an open or short in the circuit, sound cannot be heard from the speakers even if there is no malfunction in the stereo component amplifier or speakers.

WIRING DIAGRAM

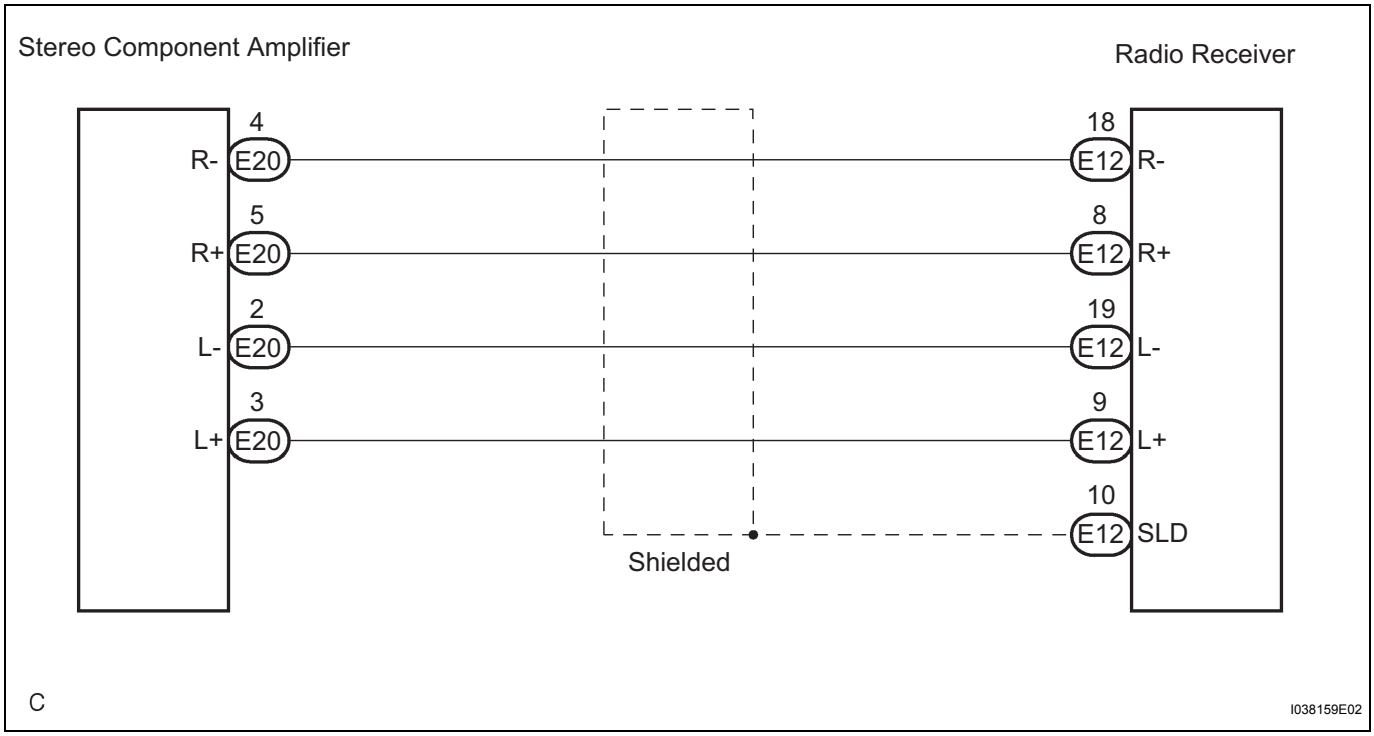

AV

INSPECTION PROCEDURE

1	**CHECK HARNESS AND CONNECTOR (RADIO RECEIVER - STEREO COMPONENT AMPLIFIER)**

Radio Receiver (12 Speaker) Wire Harness View:

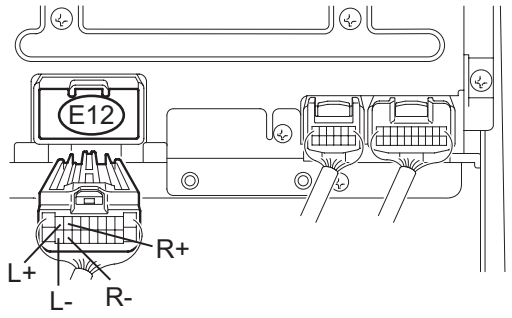

Stereo Component Amplifier Wire Harness View:

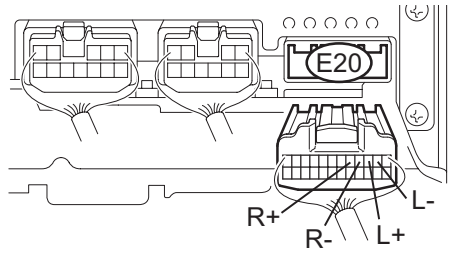

P E126144E01

(a) Disconnect the radio receiver E12 connector and stereo component amplifier E20 connector.
(b) Measure the resistance according to the value(s) in the table below.

Standard resistance

Tester Connection	Condition	Specified Condition
L+ (E12) - L+ (E20)	Always	Below 1 Ω
L- (E12) - L- (E20)	Always	Below 1 Ω
R+ (E12) - R+ (E20)	Always	Below 1 Ω
R- (E12) - R- (E20)	Always	Below 1 Ω
L+ (E12 or E20) - Body ground	Always	10 kΩ or higher
L- (E12 or E20) - Body ground	Always	10 kΩ or higher
R+ (E12 or E20) - Body ground	Always	10 kΩ or higher
R- (E12 or E20) - Body ground	Always	10 kΩ or higher

NG → **REPAIR OR REPLACE HARNESS OR CONNECTOR**

OK

PROCEED TO NEXT CIRCUIT INSPECTION SHOWN IN PROBLEM SYMPTOMS TABLE

AV

Sound Signal Circuit between Radio Receiver and Tape Player

DESCRIPTION

The tape player sends a sound signal to the radio receiver through this circuit.
If there is an open or short in the circuit, sound cannot be heard from the speakers even if there is no malfunction in the tape player or radio receiver.

WIRING DIAGRAM

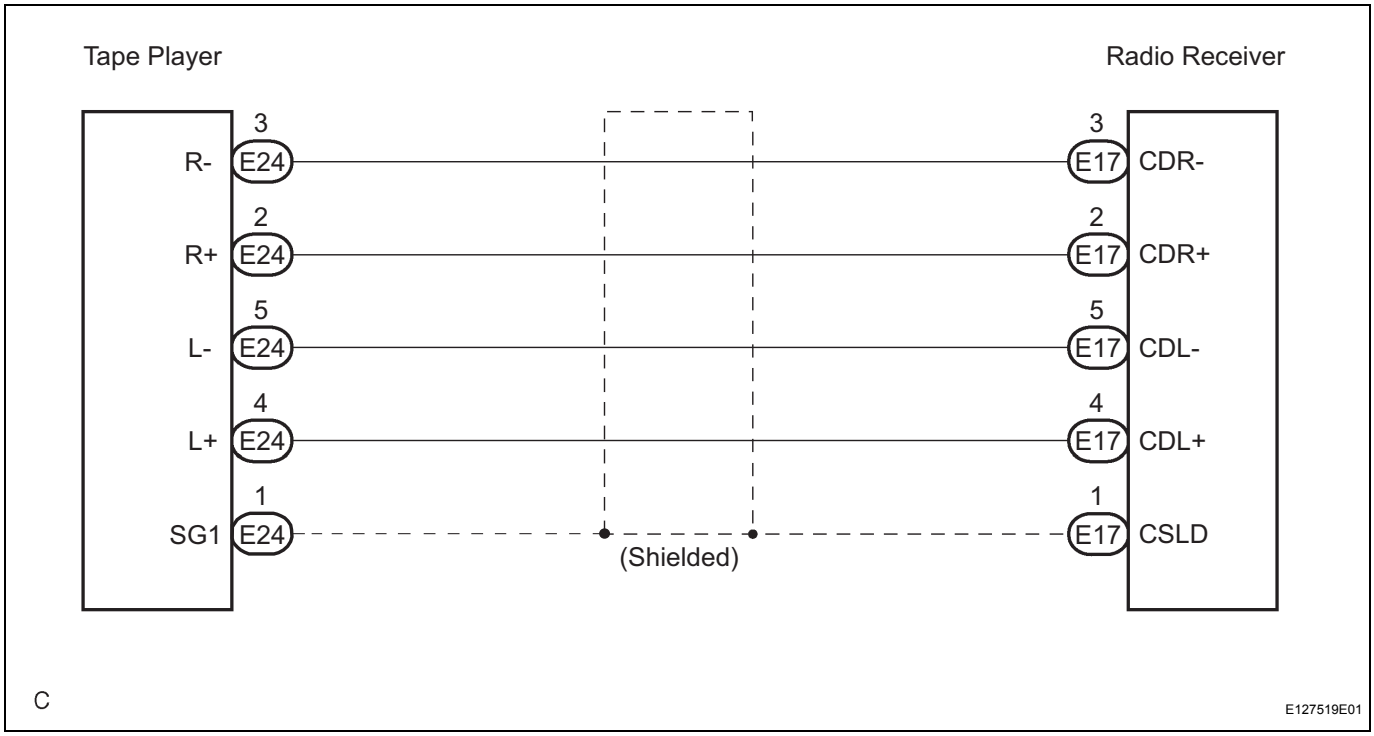

AV

INSPECTION PROCEDURE

1	CHECK HARNESS AND CONNECTOR (RADIO RECEIVER - TAPE PLAYER)

Radio Receiver (12 Speaker) Wire Harness View:

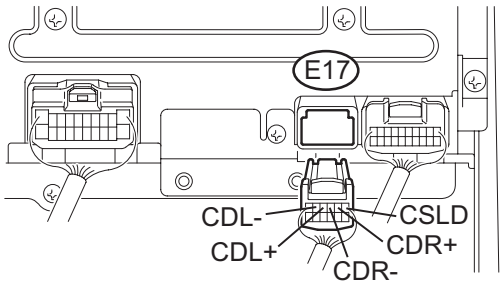

Radio Receiver (9 Speaker, 6 CD Type) Wire Harness View:

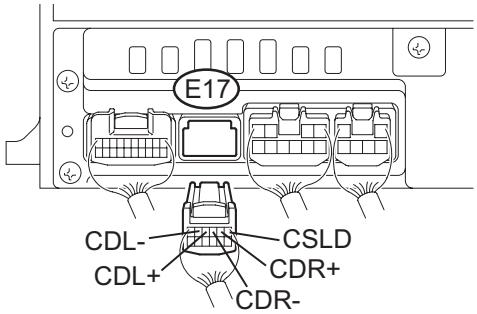

Radio Receiver (9 Speaker, 1 CD Type) Wire Harness View:

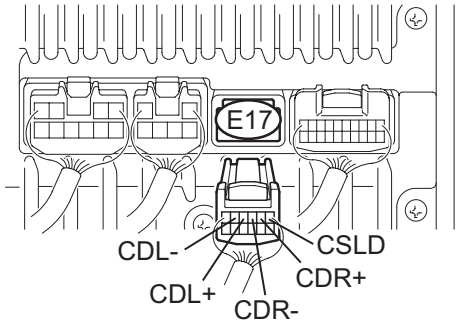

Tape Player Wire Harness View:

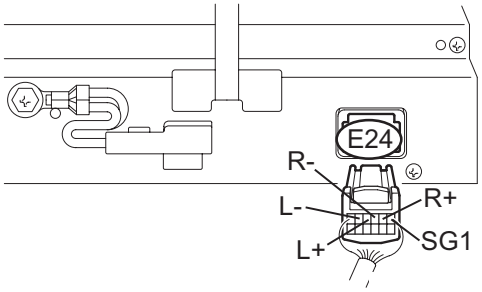

P

E126129E01

(a) Disconnect the radio receiver E17 connector and tape player E24 connector.

(b) Measure the resistance according to the value(s) in the table below.

Standard resistance

Tester Connection	Condition	Specified Condition
CDL+ - L+	Always	Below 1 Ω
CDL- - L-	Always	Below 1 Ω
CDR+ - R+	Always	Below 1 Ω
CDR- - R-	Always	Below 1 Ω
CSLD - SG1	Always	Below 1 Ω
CDL+ - Body ground	Always	10 kΩ or higher
CDL- - Body ground	Always	10 kΩ or higher
CDR+ - Body ground	Always	10 kΩ or higher
CDR- - Body ground	Always	10 kΩ or higher

NG → **REPAIR OR REPLACE HARNESS OR CONNECTOR**

AV

OK

PROCEED TO NEXT CIRCUIT INSPECTION SHOWN IN PROBLEM SYMPTOMS TABLE

Mute Signal Circuit between Radio Receiver and Stereo Component Amplifier

DESCRIPTION

This circuit sends a signal to the stereo component amplifier to mute noise. Because of that, the noise produced by changing the sound source ceases.
If there is an open in the circuit, noise can be heard from the speakers when changing the sound source.
If there is a short in the circuit, even though the stereo component amplifier is normal, no sound, or only an extremely small sound, can be produced.

WIRING DIAGRAM



AV

INSPECTION PROCEDURE

1	INSPECT STEREO COMPONENT AMPLIFIER

Wire Harness View:

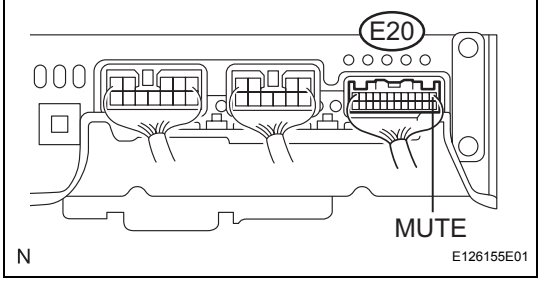

(a) Measure the voltage according to the value(s) in the table below.
Standard voltage

Tester connection	Condition	Specified condition
MUTE - Body ground	Turn ignition switch on (ACC), Audio system is playing → Changing mode	Above 3.5 V → Below 1 V

NG → **Go to step 2**

OK

PROCEED TO NEXT CIRCUIT INSPECTION SHOWN IN PROBLEM SYMPTOMS TABLE

2	CHECK HARNESS AND CONNECTOR (RADIO RECEIVER - STEREO COMPONENT AMPLIFIER)

Radio Receiver (12 Speaker) Wire Harness View:

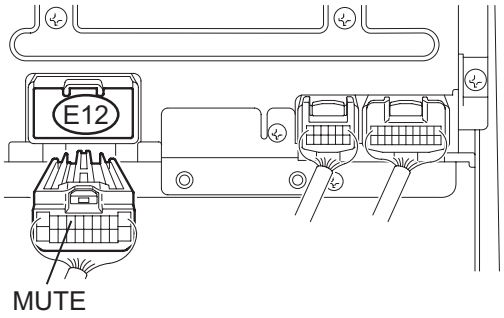

Stereo Component Amplifier Wire Harness View:

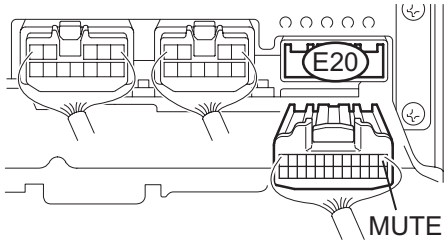

P E126144E02

(a) Disconnect the the radio receiver E12 connector and stereo component amplifier E20 connector.
(b) Measure the resistance according to the values in the table below.

Standard resistance

Tester connection	Condition	Specified condition
MUTE - MUTE	Always	Below 1 Ω
MUTE - Body ground	Always	10 kΩ or higher

NG → **REPAIR OR REPLACE HARNESS OR CONNECTOR**

OK

3	REPLACE STEREO COMPONENT AMPLIFIER

(a) Replace the stereo component amplifier and check that it operates normally.

OK:

The audio system operates normally.

OK → **END**

NG

REPLACE RADIO RECEIVER

AV

Mute Signal Circuit between Radio Receiver and Tape Player

DESCRIPTION

This circuit sends a signal to the tape player to mute noise. Because of that, the noise produced by changing the sound source ceases.
If there is an open in the circuit, noise can be heard from the speakers when changing the sound source.
If there is a short in the circuit, even though the tape player is normal, no sound, or only an extremely small sound, can be produced.

WIRING DIAGRAM



INSPECTION PROCEDURE

1	INSPECT TAPE PLAYER

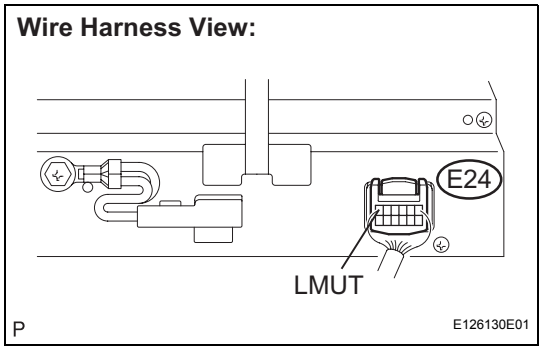

(a) Measure the voltage according to the value(s) in the table below.
Standard voltage

Tester Connection	Condition	Specified Condition
LMUT - Body ground	Turn ignition switch on (ACC). Audio system is playing → Changing mode	Above 3.5 V → Below 1 V

NG → **Go to step 2**

OK

PROCEED TO NEXT CIRCUIT INSPECTION SHOWN IN PROBLEM SYMPTOMS TABLE

2	CHECK HARNESS AND CONNECTOR (RADIO RECEIVER - TAPE PLAYER)

Radio Receiver (12 Speaker) Wire Harness View:

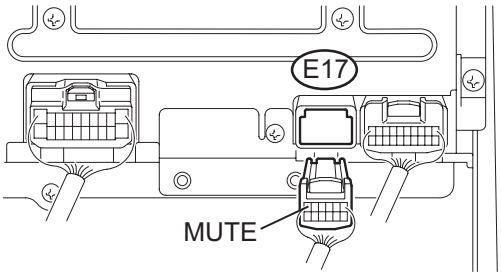

Radio Receiver (9 Speaker, 6 CD Type) Wire Harness View:

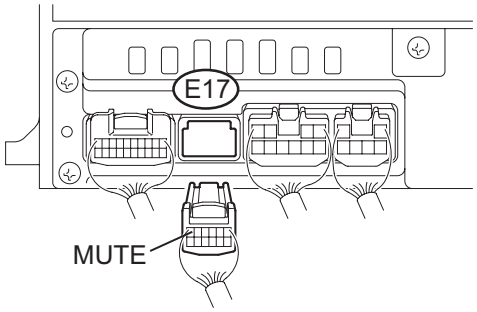

Radio Receiver (9 Speaker, 1 CD Type) Wire Harness View:

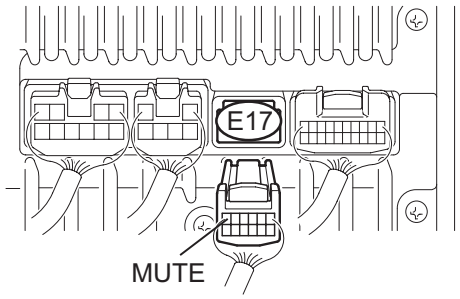

Tape Player Wire Harness View:

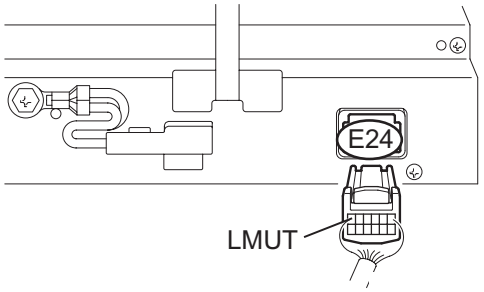

P

E126129E02

(a) Disconnect the the radio receiver E17 connector and tape player E24 connector.

(b) Measure the resistance according to the value(s) in the table below.

Standard resistance

Tester Connection	Condition	Specified Condition
MUTE - LMUT	Always	Below 1 Ω
MUTE - Body ground	Always	10 kΩ or higher

NG → **REPAIR OR REPLACE HARNESS OR CONNECTOR**

AV

OK

3	REPLACE TAPE PLAYER

(a) Replace the tape player and check that it operates normally.
OK:
The audio system operates normally.

OK → END

NG

REPLACE RADIO RECEIVER

AVC-LAN Circuit

DESCRIPTION

Each unit of the audio system connected to the AVC-LAN (communication bus) transfers the signal of each switch by communication.
When a short to +B or short to ground occurs in this AVC-LAN, the audio system will not function normally as the communication is discontinued.

INSPECTION PROCEDURE

1	INSPECT RADIO RECEIVER

Wire Harness View (12 Speaker):

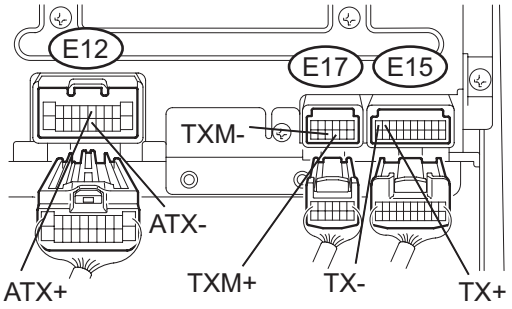

Wire Harness View

(9 Speaker, 6 CD Type):

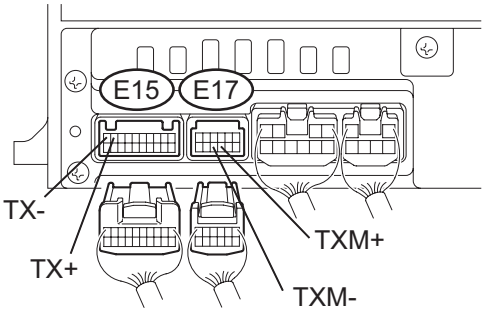

Wire Harness View

(9 Speaker, 1 CD Type):

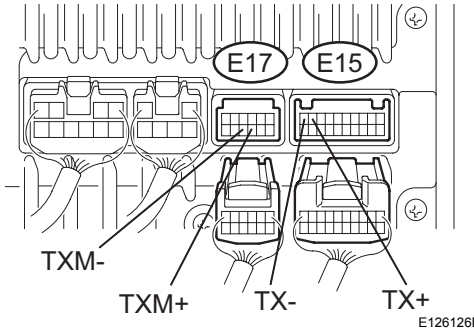

P E126126E02

(a) Disconnect the radio receiver connectors.
(b) Measure the resistance according to the value(s) in the table below.

Standard resistance

Tester Connection	Condition	Specified Condition
TX+ (E15-9) - TX- (E15-10)	Always	60 to 80 Ω
TXM+ (E17-9) - TXM- (E17-10) (*1)	Always	60 to 80 Ω
ATX+ (E12-5) - ATX- (E12-15) (*2)	Always	60 to 80 Ω

*1: with Tape Player
*2: for 12 Speaker System

NG → REPLACE RADIO RECEIVER

OK

AV

2	CHECK HARNESS AND CONNECTOR

HINT:
For details of the connectors, refer to "TERMINALS OF ECU" (See page AV-13).

(a) Referring to the AVC-LAN wiring diagram below, check all AVC-LAN circuits.
  (1) Disconnect all connectors in all AVC-LAN circuits.
  (2) Check for an open or short in all AVC-LAN circuits.
  OK:
  There is no open or short circuit.

AVC-LAN WIRING DIAGRAM

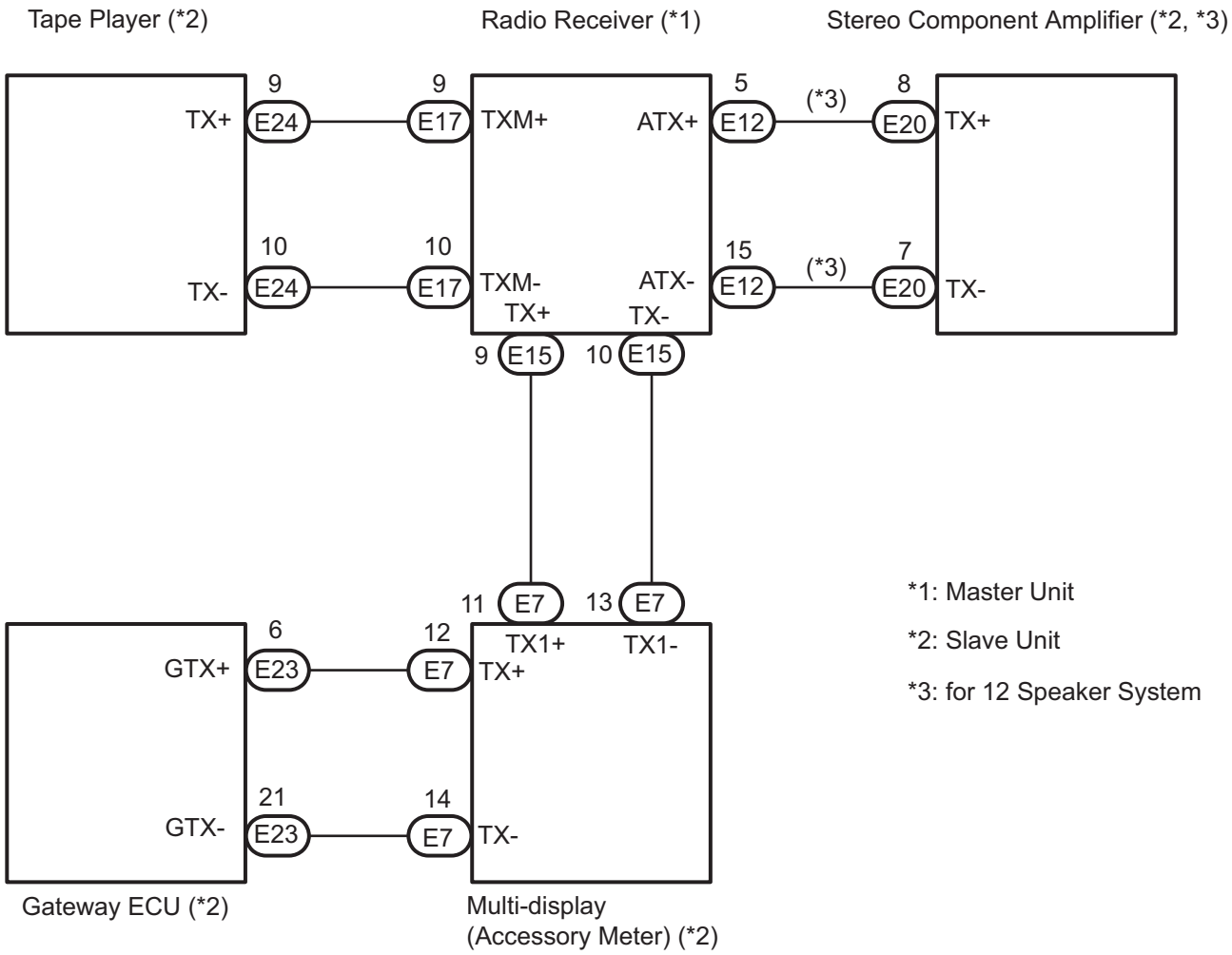

NG	REPAIR OR REPLACE HARNESS OR CONNECTOR

OK

PROCEED TO NEXT CIRCUIT INSPECTION SHOWN IN PROBLEM SYMPTOMS TABLE

Gateway ECU Communication Error

INSPECTION PROCEDURE

1	IDENTIFY THE COMPONENT SHOWN BY SUB-CODE

(a) Enter the diagnostic mode.

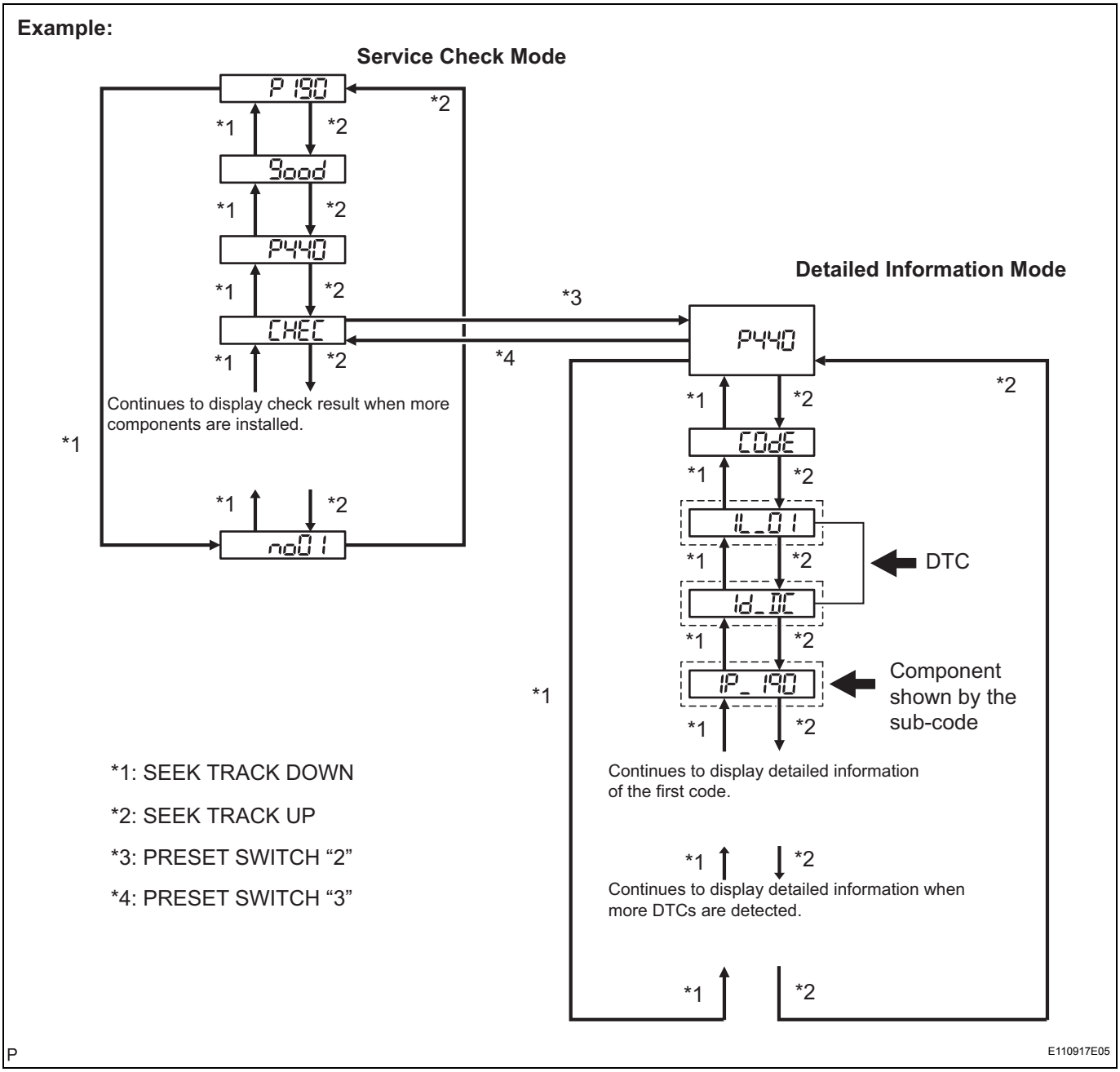

(b) Press the preset switch "3" to change to "Detailed Information Mode".

(c) Identify the component shown by the sub-code.

HINT:

- "190 (radio receiver)" is the component shown by the sub-code in the example shown in the illustration.

- For details of the DTC display, refer to "DTC CHECK/ CLEAR" (See page AV-18).

NEXT

2	CHECK POWER SOURCE CIRCUIT OF COMPONENT SHOWN BY SUB-CODE

(a) Inspect the power source circuit of the component shown by the sub-code.
If the power source circuit is operating normally, proceed to the next step.

Component Table:

Component	Proceed to
Radio receiver (190)	Radio receiver power source circuit (See page AV-147)
Stereo component amplifier (440)	Stereo component amplifier power source circuit (See page AV-149)
Multi-display (Accessory meter) (1D4)	Multi-display power source circuit (See page AV-151)
Tape player (320)	Tape player power source circuit (See page AV-155)

NEXT

3	INSPECT RADIO RECEIVER

Wire Harness View (12 Speaker):

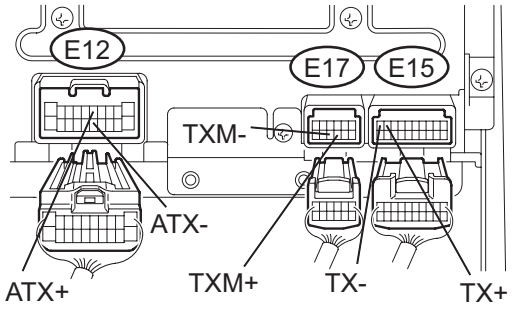

Wire Harness View

(9 Speaker, 6 CD Type):

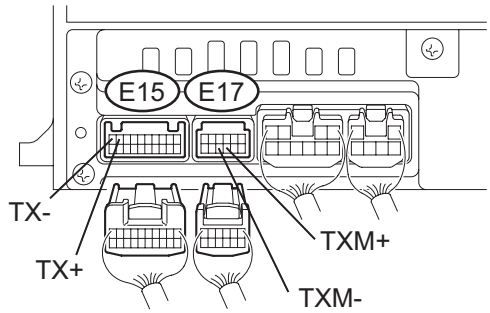

Wire Harness View

(9 Speaker, 1 CD Type):

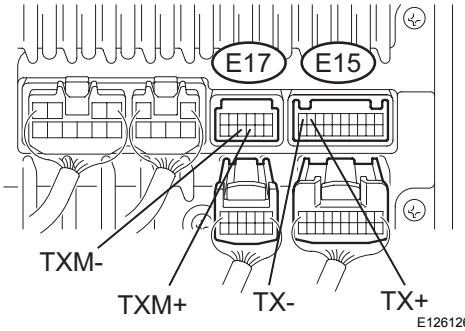

P E126126E02

(a) Disconnect the radio receiver connectors.
(b) Measure the resistance according to the value(s) in the table below.

Standard resistance

Tester Connection	Condition	Specified Condition
TX+ (E15-9) - TX- (E15-10)	Always	60 to 80 Ω
TXM+ (E17-9) - TXM- (E17-10) (*1)	Always	60 to 80 Ω
ATX+ (E12-5) - ATX- (E12-15) (*2)	Always	60 to 80 Ω

*1: with Tape Player
*2: for 12 Speaker System

NG → REPLACE RADIO RECEIVER

OK

4	CHECK HARNESS AND CONNECTOR (GATEWAY ECU - COMPONENT SHOWN BY SUB-CODE)

HINT:
- Start the check from the circuit that is near the component shown by the sub-code first.
- For details of the connectors, refer to "TERMINALS OF ECU" (See page AV-13).

(a) Referring to the AVC-LAN wiring diagram below, check the AVC-LAN circuit between the gateway ECU and the component shown by the sub-code.
  (1) Disconnect all connectors between the gateway ECU and the component shown by sub-code.
  (2) Check for an open or short in the AVC-LAN circuit between the gateway ECU and the component shown by the sub-code.
  OK:
  There is no open or short circuit.

AVC-LAN WIRING DIAGRAM

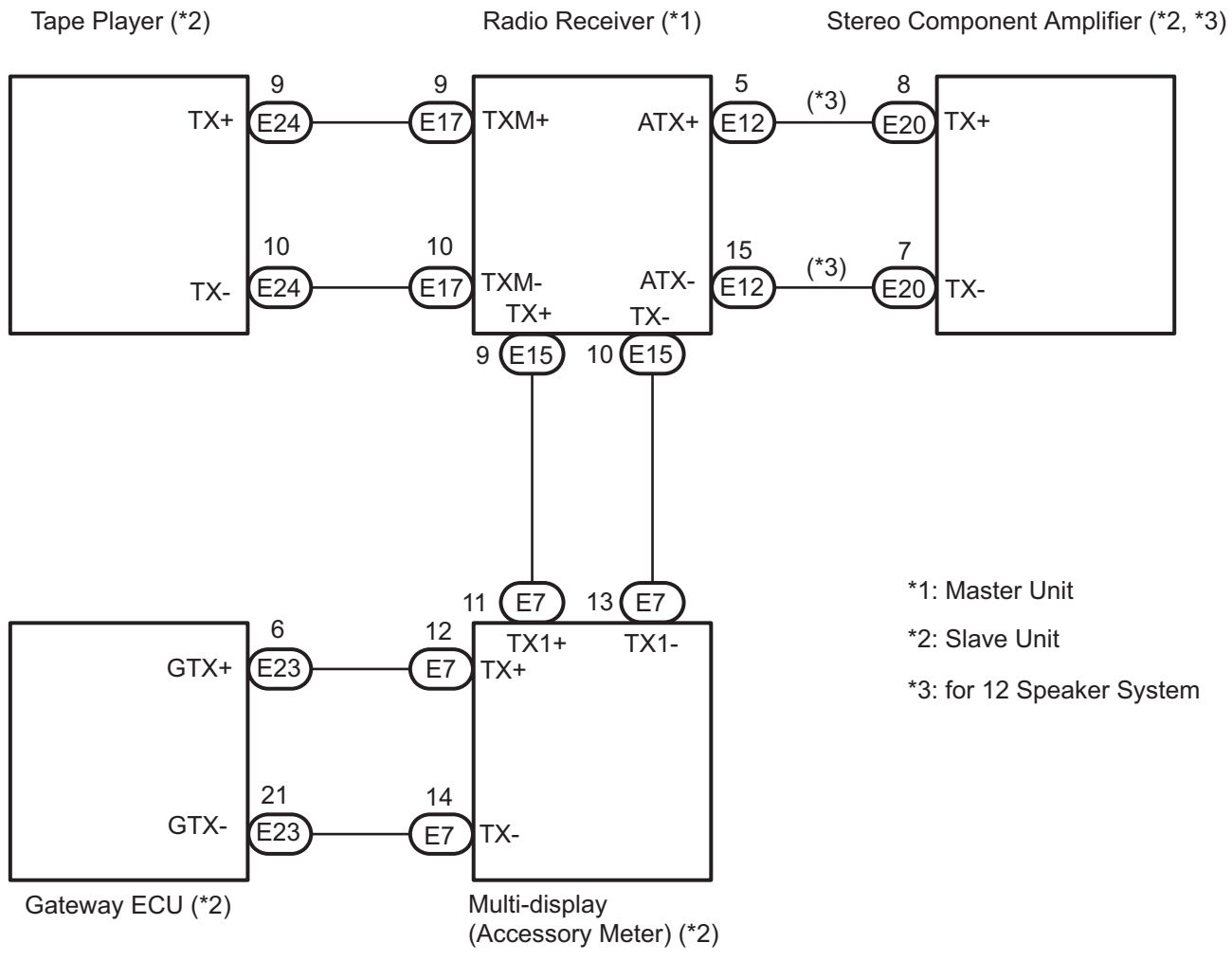

NG → **REPAIR OR REPLACE HARNESS OR CONNECTOR**

OK

5	REPLACE COMPONENT SHOWN BY SUB-CODE

(a) Replace the component shown by the sub-code with a normal one and check if the same problem occurs again.
OK:
Same problem does not occur.

NG → **REPLACE GATEWAY ECU**

OK

END

Radio Receiver Communication Error

INSPECTION PROCEDURE

1	IDENTIFY THE COMPONENT SHOWN BY SUB-CODE

(a) Enter the diagnostic mode.

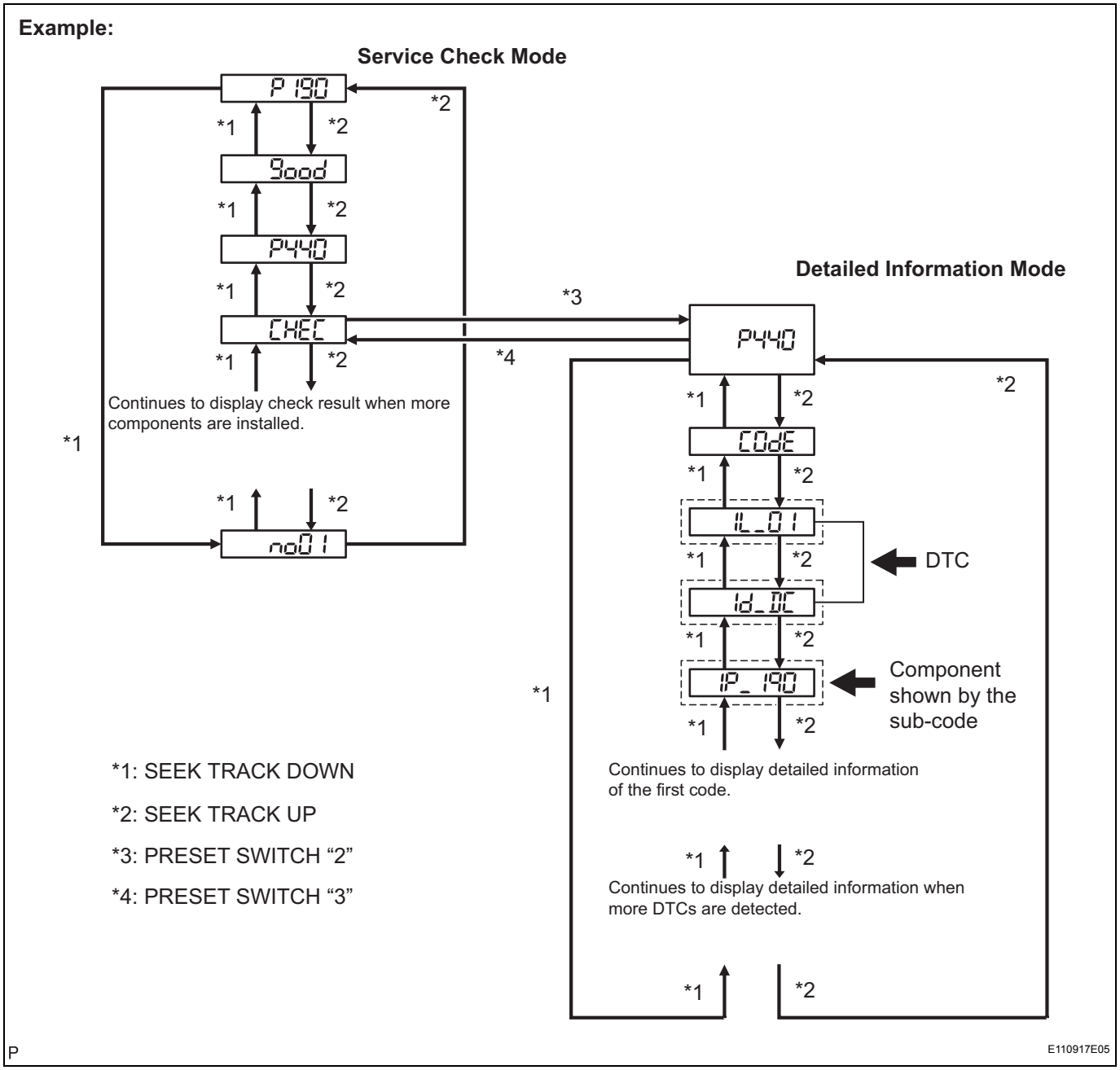

(b) Press the preset switch "3" to change to "Detailed Information Mode".

(c) Identify the component shown by the sub-code.

HINT:

- "190 (radio receiver)" is the component shown by the sub-code in the example shown in the illustration.

- For details of the DTC display, refer to "DTC CHECK/ CLEAR" (See page AV-18).

NEXT

2	CHECK POWER SOURCE CIRCUIT OF COMPONENT SHOWN BY SUB-CODE

(a) Inspect the power source circuit of the component shown by the sub-code.
If the power source circuit is operating normally, proceed to the next step.

Component Table:

Component	Proceed to
Gateway ECU (1C6)	Gateway ECU power source circuit (See page AV-153)
Stereo component amplifier (440)	Stereo component amplifier power source circuit (See page AV-149)
Multi-display (Accessory meter) (1D4)	Multi-display power source circuit (See page AV-151)
Tape player (320)	Tape player power source circuit (See page AV-155)

NEXT

3	INSPECT RADIO RECEIVER

Wire Harness View (12 Speaker):

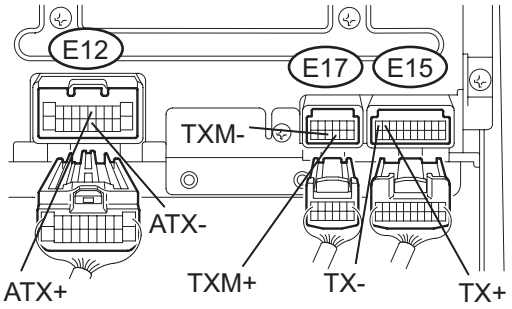

Wire Harness View

(9 Speaker, 6 CD Type):

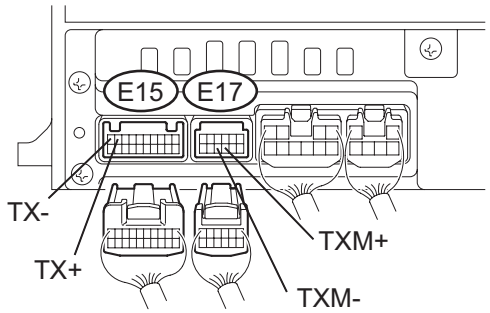

Wire Harness View

(9 Speaker, 1 CD Type):

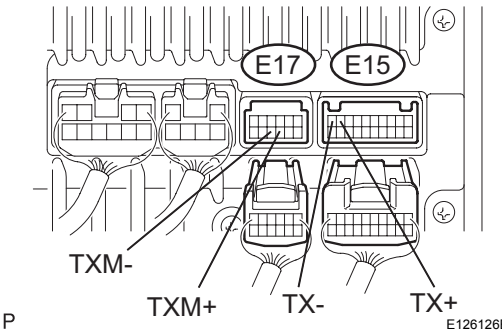

P E126126E02

(a) Disconnect the radio receiver connectors.
(b) Measure the resistance according to the value(s) in the table below.

Standard resistance

Tester Connection	Condition	Specified Condition
TX+ (E15-9) - TX- (E15-10)	Always	60 to 80 Ω
TXM+ (E17-9) - TXM- (E17-10) (*1)	Always	60 to 80 Ω
ATX+ (E12-5) - ATX- (E12-15) (*2)	Always	60 to 80 Ω

*1: with Tape Player
*2: for 12 Speaker System

NG → REPLACE RADIO RECEIVER

OK

4	CHECK HARNESS AND CONNECTOR (RADIO RECEIVER - COMPONENT SHOWN BY SUB-CODE)

HINT:
- Start the check from the circuit that is near the component shown by the sub-code first.
- For details of the connectors, refer to "TERMINALS OF ECU" (See page AV-13).

AV

(a) Referring to the AVC-LAN wiring diagram below, check the AVC-LAN circuit between the radio receiver and the component shown by the sub-code.
  (1) Disconnect all connectors between the radio receiver and the component shown by sub-code.
  (2) Check for an open or short in the AVC-LAN circuit between the radio receiver and the component shown by the sub-code.
  OK:
  There is no open or short circuit.

AVC-LAN WIRING DIAGRAM

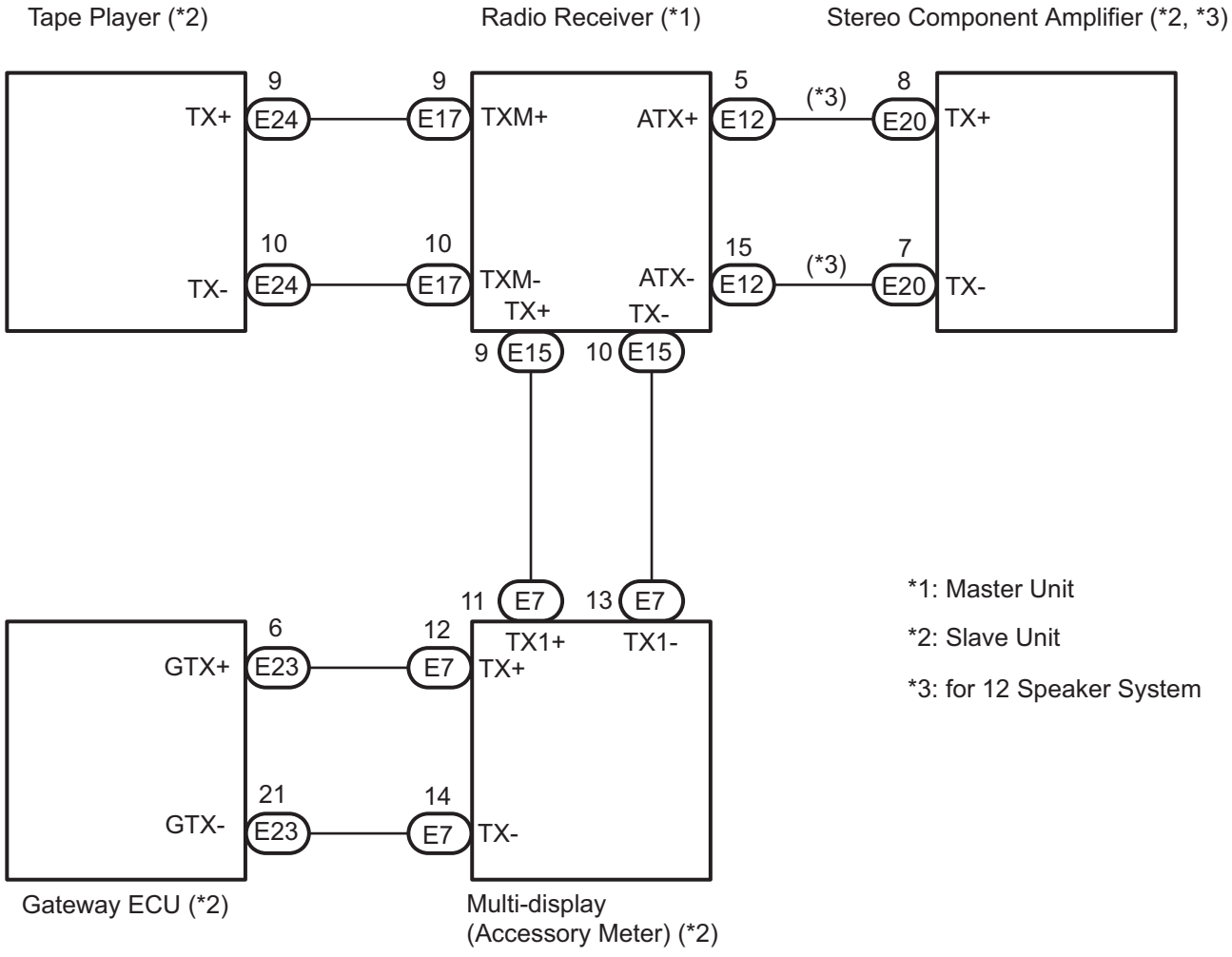

NG → **REPAIR OR REPLACE HARNESS OR CONNECTOR**

OK

5	REPLACE COMPONENT SHOWN BY SUB-CODE

(a) Replace the component shown by the sub-code with a normal one and check if the same problem occurs again.
OK:
Same problem does not occur.

NG → **REPLACE RADIO RECEIVER**

OK

END

Stereo Component Amplifier Communication Error

INSPECTION PROCEDURE

1	IDENTIFY THE COMPONENT SHOWN BY SUB-CODE

(a) Enter the diagnostic mode.

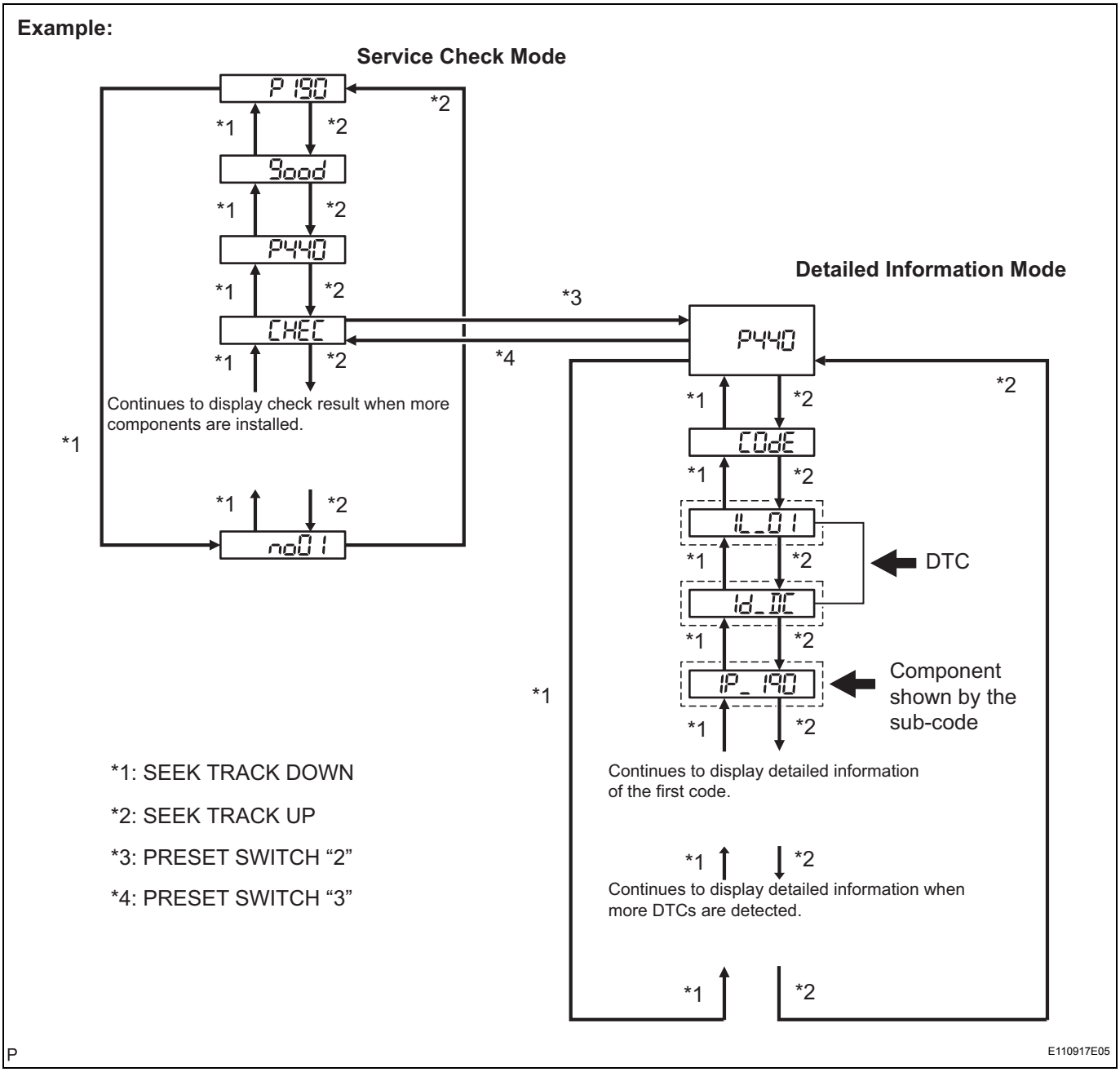

(b) Press the preset switch "3" to change to "Detailed Information Mode".

(c) Identify the component shown by the sub-code.

HINT:

- "190 (radio receiver)" is the component shown by the sub-code in the example shown in the illustration.

- For details of the DTC display, refer to "DTC CHECK/ CLEAR" (See page AV-18).

NEXT

2	CHECK POWER SOURCE CIRCUIT OF COMPONENT SHOWN BY SUB-CODE

(a) Inspect the power source circuit of the component shown by the sub-code.
If the power source circuit is operating normally, proceed to the next step.

Component Table:

Component	Proceed to
Gateway ECU (1C6)	Gateway ECU power source circuit (See page AV-153)
Tape player (320)	Tape player power source circuit (See page AV-155)
Radio receiver (190)	Radio receiver power source circuit (See page AV-147)
Multi-display (Accessory meter) (1D4)	Multi-display power source circuit (See page AV-151)

NEXT

3	INSPECT RADIO RECEIVER

Wire Harness View (12 Speaker):

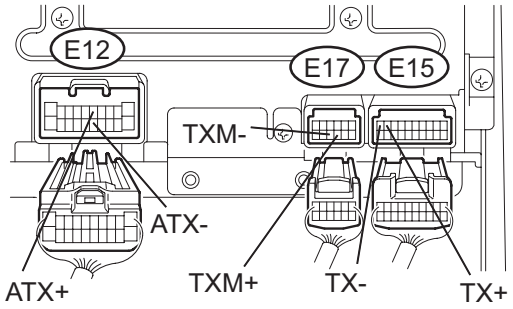

Wire Harness View

(9 Speaker, 6 CD Type):

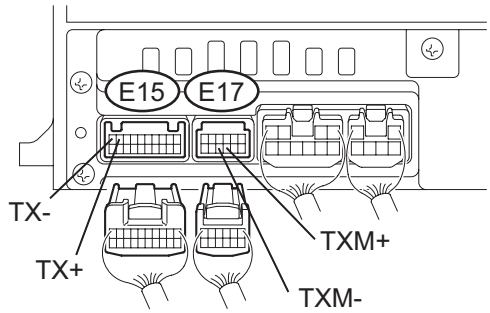

Wire Harness View

(9 Speaker, 1 CD Type):

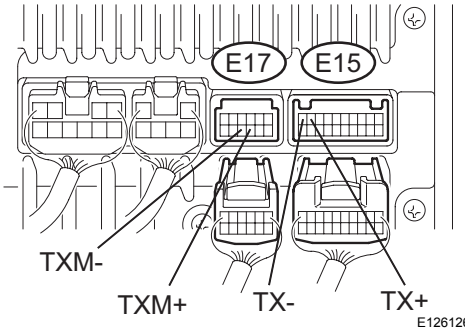

P E126126E02

(a) Disconnect the radio receiver connectors.
(b) Measure the resistance according to the value(s) in the table below.

Standard resistance

Tester Connection	Condition	Specified Condition
TX+ (E15-9) - TX- (E15-10)	Always	60 to 80 Ω
TXM+ (E17-9) - TXM- (E17-10) (*1)	Always	60 to 80 Ω
ATX+ (E12-5) - ATX- (E12-15) (*2)	Always	60 to 80 Ω

*1: with Tape Player
*2: for 12 Speaker System

NG → REPLACE RADIO RECEIVER

OK

4	CHECK HARNESS AND CONNECTOR (STEREO COMPONENT AMPLIFIER - COMPONENT SHOWN BY SUB-CODE)

HINT:
- Start the check from the circuit that is near the component shown by the sub-code first.
- For details of the connectors, refer to the "TERMINALS OF ECU" (See page AV-13).

(a) Referring to the AVC-LAN wiring diagram below, check the AVC-LAN circuit between the stereo component amplifier and the component shown by the sub-code.
  (1) Disconnect all connectors between the stereo component amplifier and the component shown by sub-code.
  (2) Check for an open or short in the AVC-LAN circuit between the stereo component amplifier and the component shown by the sub-code.
  OK:
  There is no open or short circuit.

AVC-LAN WIRING DIAGRAM

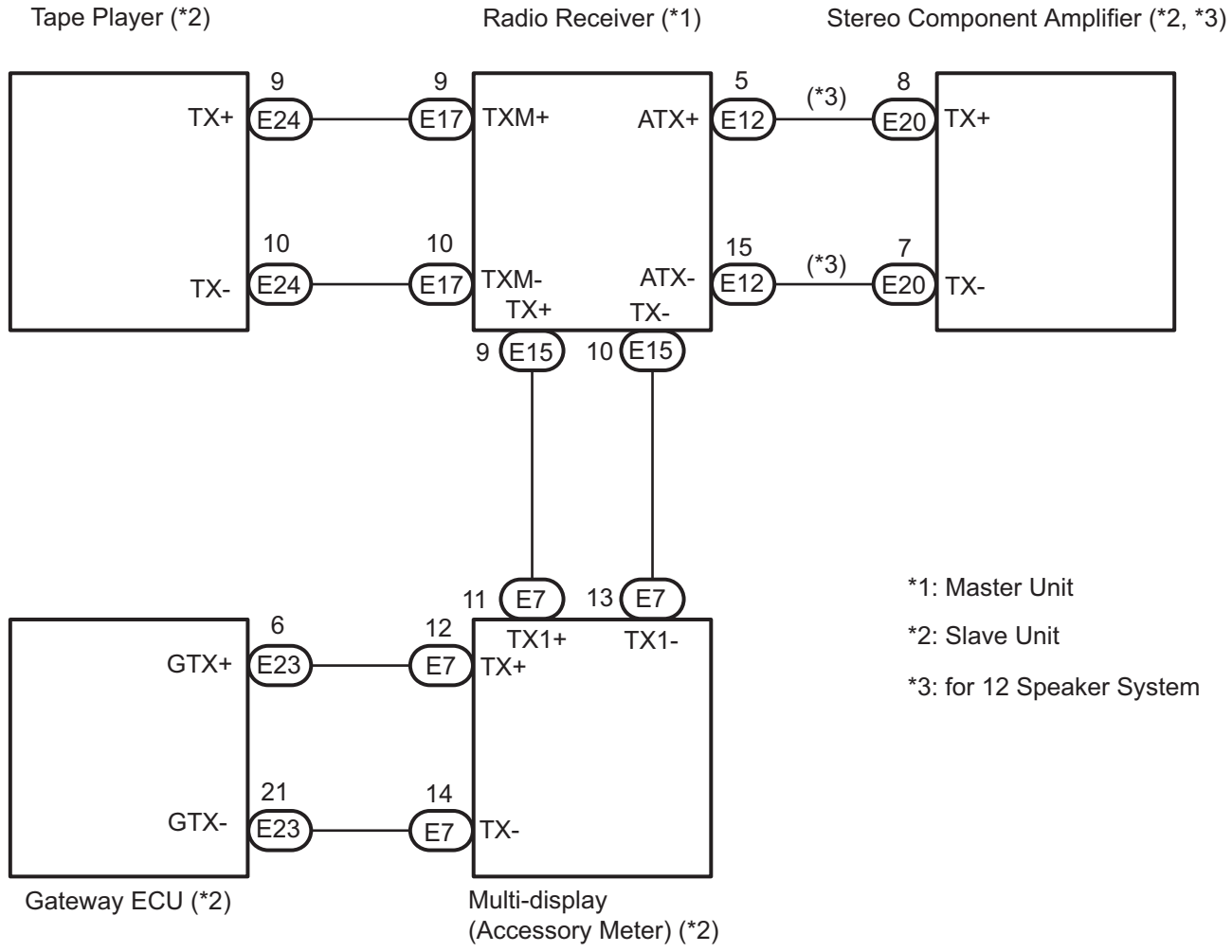

NG → **REPAIR OR REPLACE HARNESS OR CONNECTOR**

AV

OK

5	REPLACE COMPONENT SHOWN BY SUB-CODE

(a) Replace the component shown by the sub-code with a normal one and check if the same problem occurs again.
OK:
Same problem does not occur.

NG → **REPLACE STEREO COMPONENT AMPLIFIER**

OK

END

Multi-display Communication Error

INSPECTION PROCEDURE

1	IDENTIFY THE COMPONENT SHOWN BY SUB-CODE

(a) Enter the diagnostic mode.

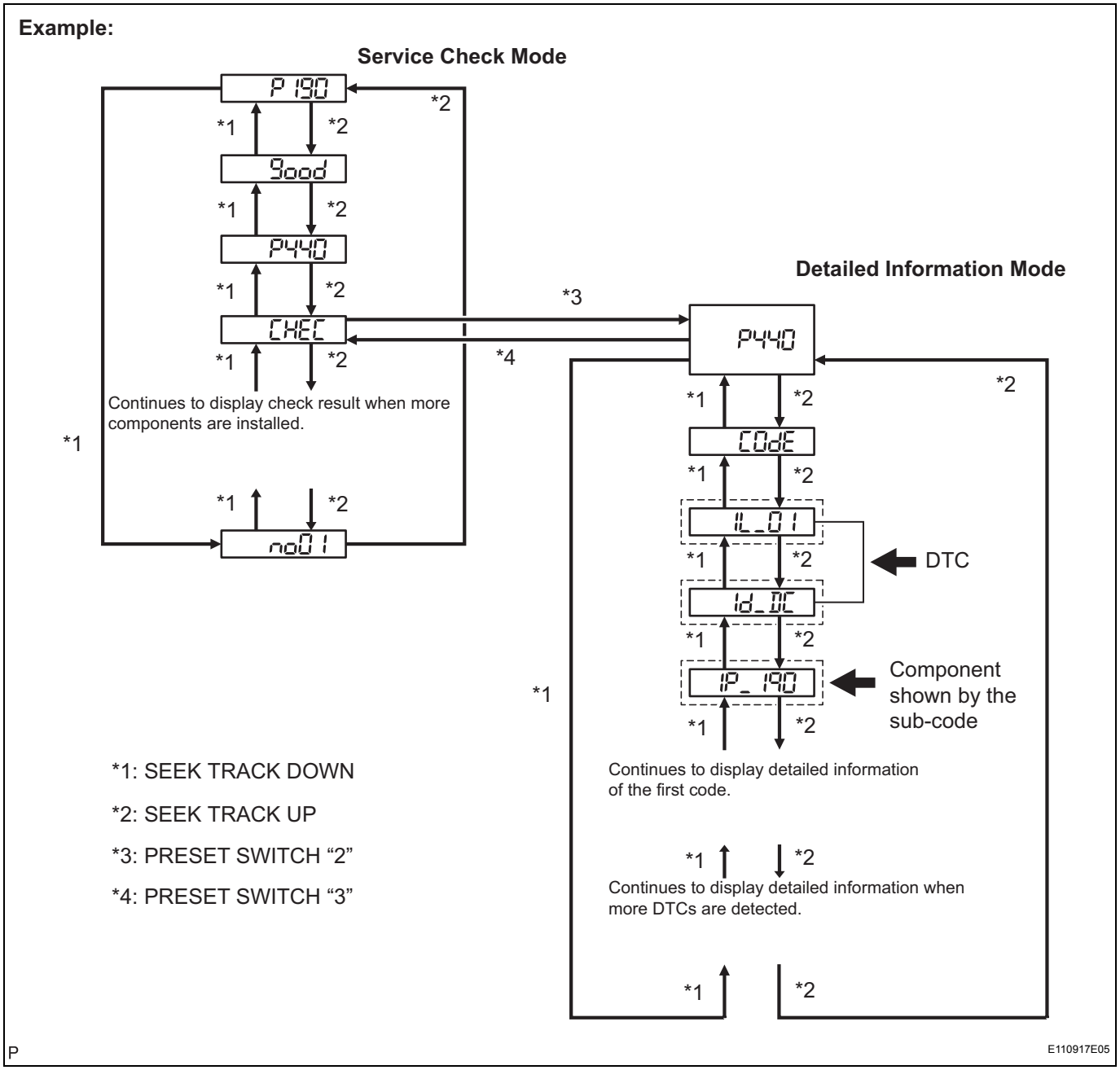

(b) Press the preset switch "3" to change to "Detailed Information Mode".

(c) Identify the component shown by the sub-code.
HINT:
- "190 (radio receiver)" is the component shown by the sub-code in the example shown in the illustration.

- For details of the DTC display, refer to "DTC CHECK/ CLEAR" (See page AV-18).

NEXT

2	CHECK POWER SOURCE CIRCUIT OF COMPONENT SHOWN BY SUB-CODE

(a) Inspect the power source circuit of the component shown by the sub-code.
If the power source circuit is operating normally, proceed to the next step.

Component Table:

Component	Proceed to
Gateway ECU (1C6)	Gateway ECU power source circuit (See page AV-153)
Tape player (320)	Tape player power source circuit (See page AV-155)
Radio receiver (190)	Radio receiver power source circuit (See page AV-147)
Stereo component amplifier (440)	Stereo component amplifier power source circuit (See page AV-149)

NEXT

3	INSPECT RADIO RECEIVER

Wire Harness View (12 Speaker):

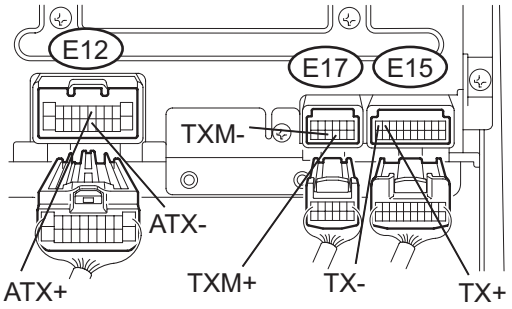

Wire Harness View

(9 Speaker, 6 CD Type):

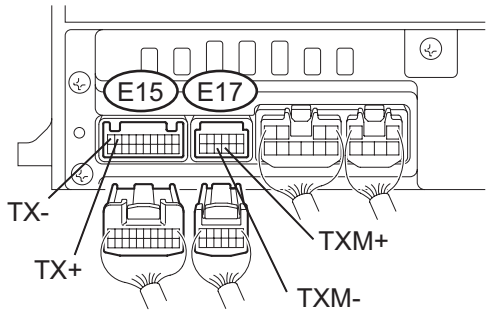

Wire Harness View

(9 Speaker, 1 CD Type):

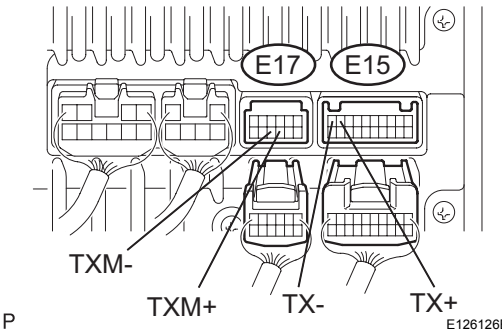

P E126126E02

(a) Disconnect the radio receiver connectors.
(b) Measure the resistance according to the value(s) in the table below.

Standard resistance

Tester Connection	Condition	Specified Condition
TX+ (E15-9) - TX- (E15-10)	Always	60 to 80 Ω
TXM+ (E17-9) - TXM- (E17-10) (*1)	Always	60 to 80 Ω
ATX+ (E12-5) - ATX- (E12-15) (*2)	Always	60 to 80 Ω

*1: with Tape Player
*2: for 12 Speaker System

NG → REPLACE RADIO RECEIVER

OK

4	CHECK HARNESS AND CONNECTOR (MULTI-DISPLAY - COMPONENT SHOWN BY SUB-CODE)

HINT:
- Start the check from the circuit that is near the component shown by the sub-code first.
- For details of the connectors, refer to the "TERMINALS OF ECU" (See page AV-13).

AV

(a) Referring to the AVC-LAN wiring diagram below, check the AVC-LAN circuit between the multi-display (accessory meter) and the component shown by the sub-code.
   (1) Disconnect all connectors between the multi-display (accessory meter) and the component shown by the sub-code.
   (2) Check for an open or short in the AVC-LAN circuit between the multi-display (accessory meter) and the component shown by the sub-code.
   OK:
   There is no open or short circuit.

AVC-LAN WIRING DIAGRAM

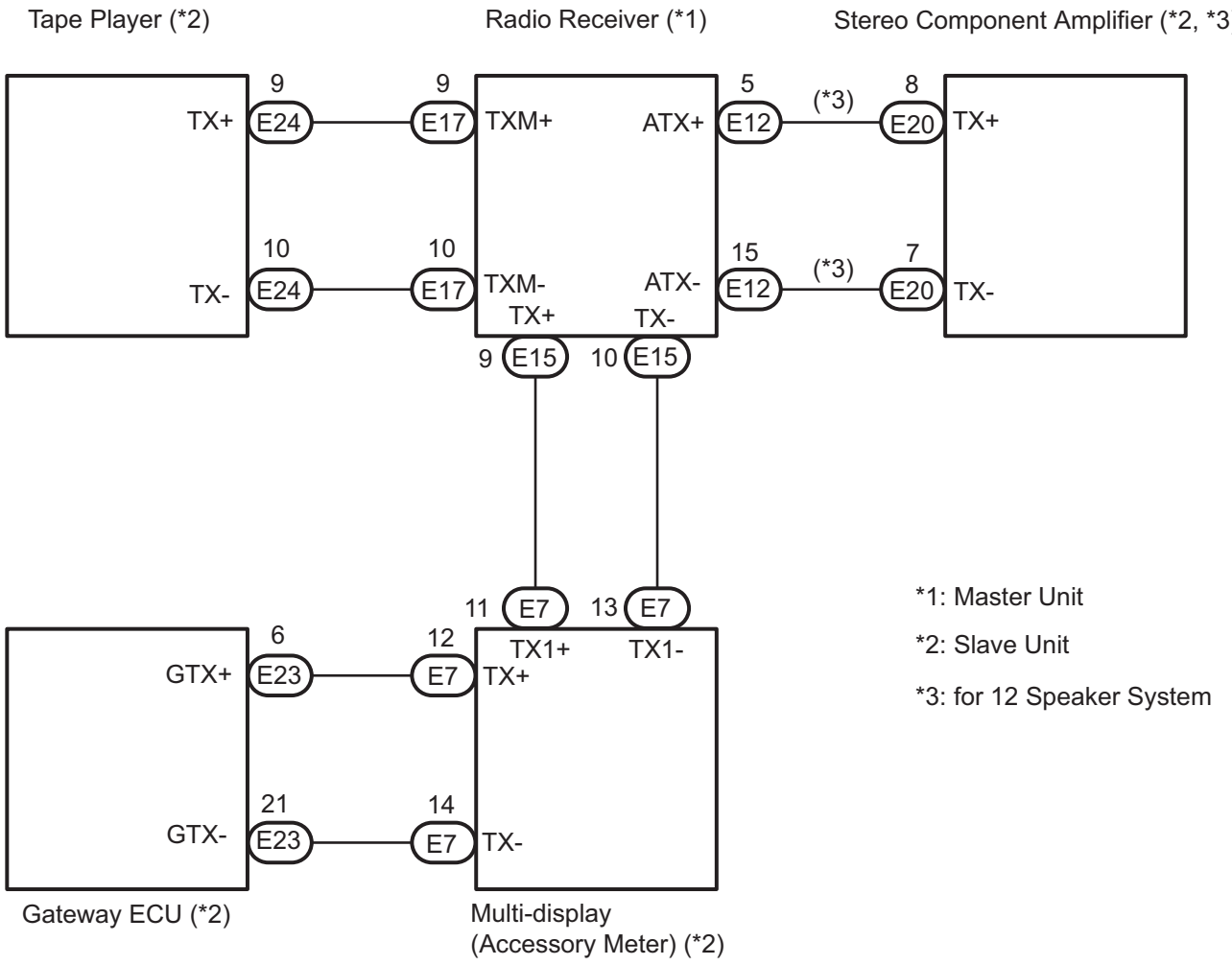

P

E124057E04

NG → **REPAIR OR REPLACE HARNESS OR CONNECTOR**

OK

5	REPLACE COMPONENT SHOWN BY SUB-CODE

(a) Replace the component shown by the sub-code with a normal one and check if the same problem occurs again.
OK:
Same problem does not occur.

NG → **REPLACE MULTI-DISPLAY (ACCESSORY METER)**

OK

END

Tape Player Communication Error

INSPECTION PROCEDURE

1	IDENTIFY THE COMPONENT SHOWN BY SUB-CODE

(a) Enter the diagnostic mode.

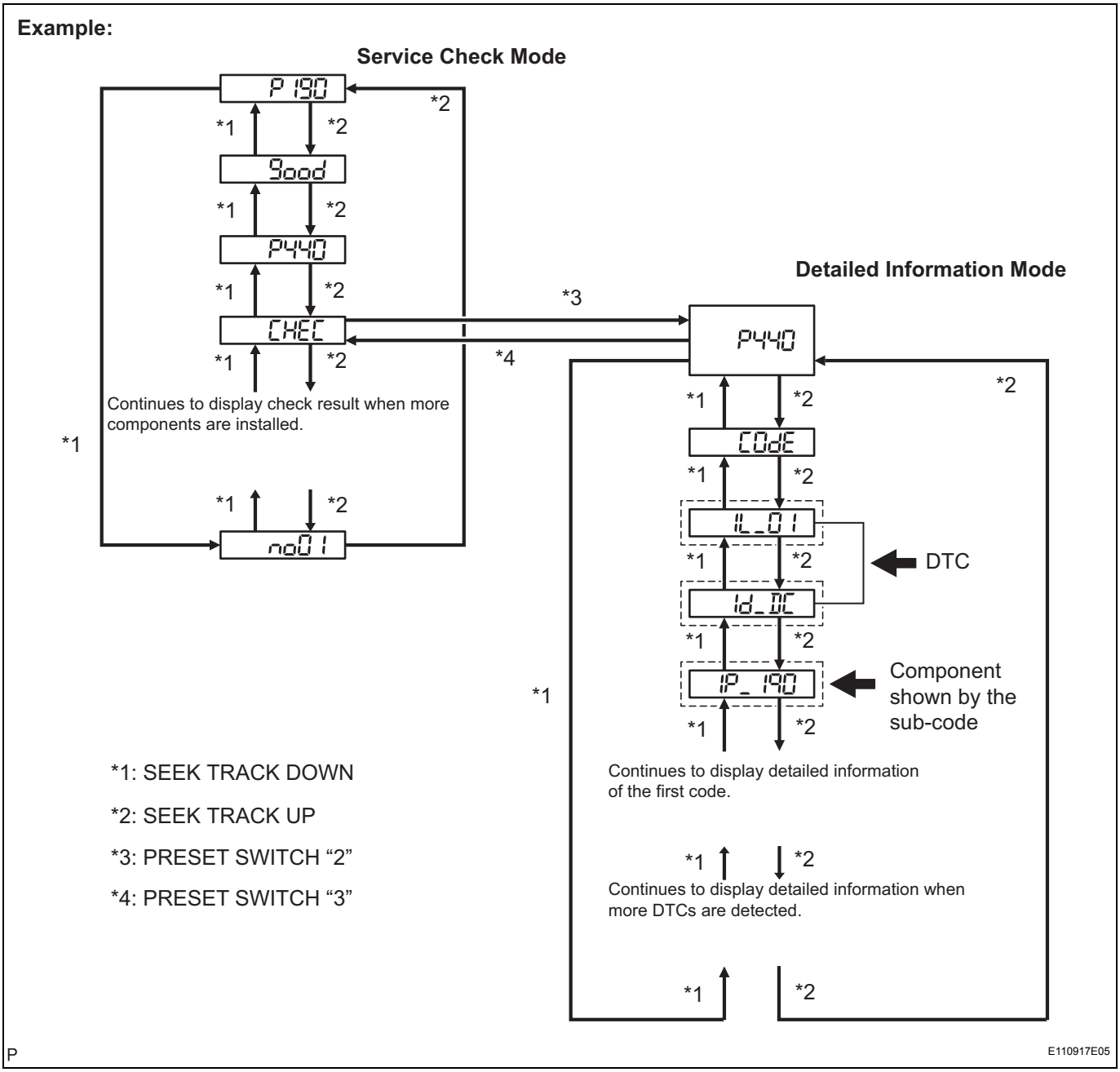

(b) Press the preset switch "3" to change to "Detailed Information Mode".

(c) Identify the component shown by the sub-code.
HINT:
- "190 (radio receiver)" is the component shown by the sub-code in the example shown in the illustration.

- For details of the DTC display, refer to "DTC CHECK/ CLEAR" (See page AV-18).

NEXT

2	CHECK POWER SOURCE CIRCUIT OF COMPONENT SHOWN BY SUB-CODE

(a) Inspect the power source circuit of the component shown by the sub-code.
If the power source circuit is operating normally, proceed to the next step.

Component Table:

Component	Proceed to
Gateway ECU (1C6)	Gateway ECU power source circuit (See page AV-153)
Stereo component amplifier (440)	Stereo component amplifier power source circuit (See page AV-149)
Radio receiver (190)	Radio receiver power source circuit (See page AV-147)
Multi-display (Accessory meter) (1D4)	Multi-display power source circuit (See page AV-151)

NEXT

3	INSPECT RADIO RECEIVER

Wire Harness View (12 Speaker):

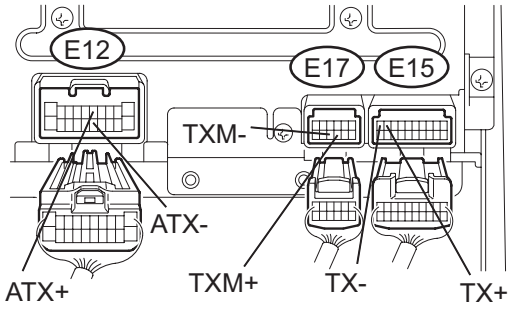

Wire Harness View

(9 Speaker, 6 CD Type):

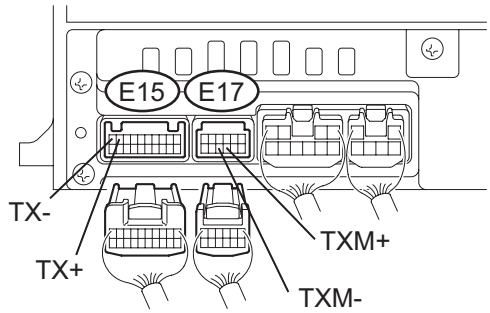

Wire Harness View

(9 Speaker, 1 CD Type):

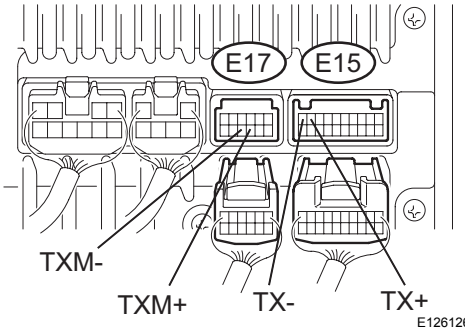

P E126126E02

(a) Disconnect the radio receiver connectors.
(b) Measure the resistance according to the value(s) in the table below.

Standard resistance

Tester Connection	Condition	Specified Condition
TX+ (E15-9) - TX- (E15-10)	Always	60 to 80 Ω
TXM+ (E17-9) - TXM- (E17-10) (*1)	Always	60 to 80 Ω
ATX+ (E12-5) - ATX- (E12-15) (*2)	Always	60 to 80 Ω

*1: with Tape Player
*2: for 12 Speaker System

NG → REPLACE RADIO RECEIVER

OK

4	CHECK HARNESS AND CONNECTOR (TAPE PLAYER - COMPONENT SHOWN BY SUB-CODE)

HINT:
- Start the check from the circuit that is near the component shown by the cub-code.
- For details of the connectors, refer to the "TERMINALS OF ECU" (See page AV-13).

(a) Referring to the AVC-LAN wiring diagram below, check the AVC-LAN circuit between the tape player and the component shown by the sub-code.
  (1) Disconnect all connectors between the tape player and the component shown by the sub-code.
  (2) Check for an open or short in the AVC-LAN circuit between the tape player and the component shown by the sub-code.
  OK:
  There is no open or short circuit.

AVC-LAN WIRING DIAGRAM

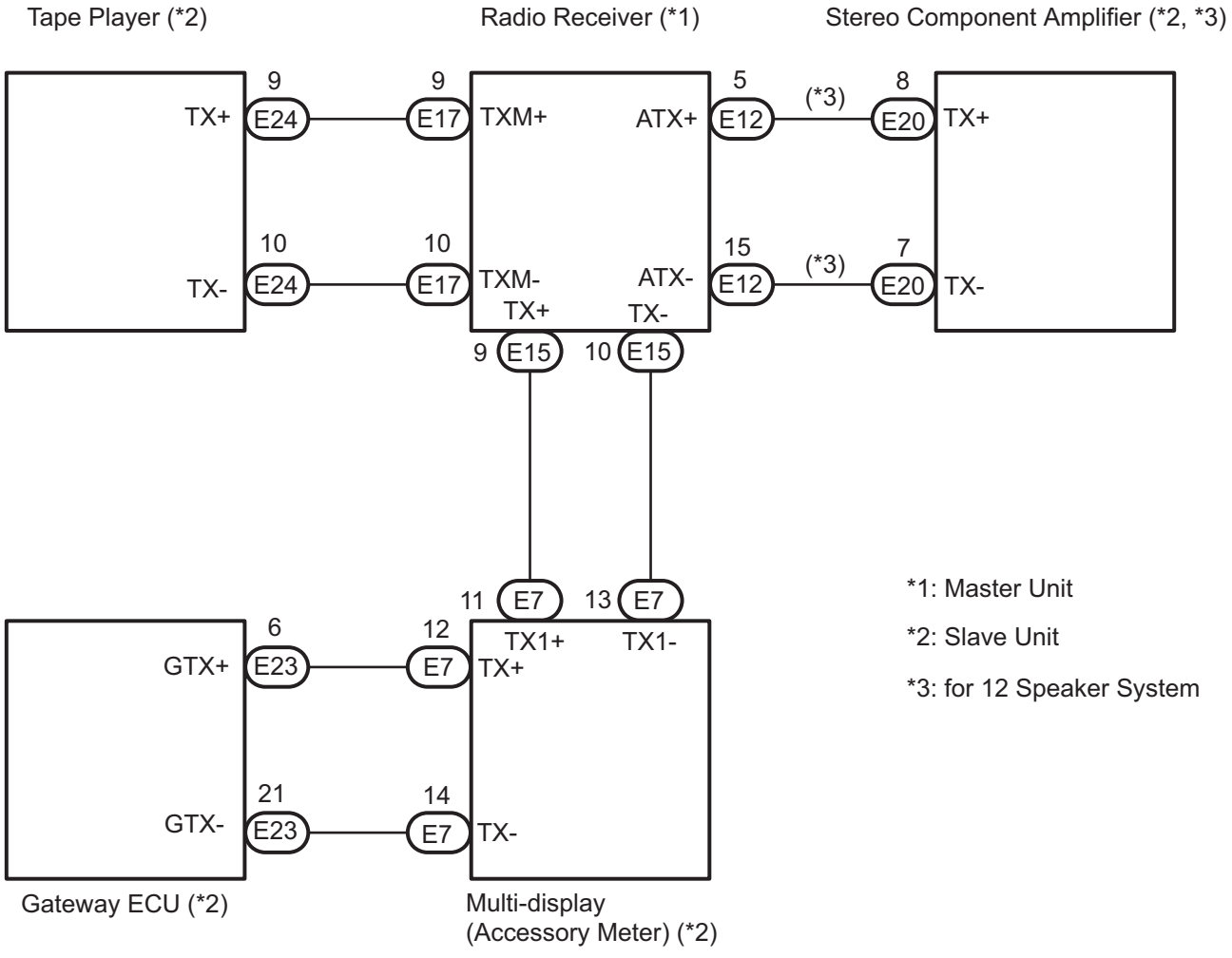

NG → **REPAIR OR REPLACE HARNESS OR CONNECTOR**

OK

AV

5	REPLACE COMPONENT SHOWN BY SUB-CODE

(a) Replace the component shown by the sub-code with a normal one and check if the same problem occurs again.
OK:
Same problem does not occur.

NG → **REPLACE TAPE PLAYER**

OK

END

Radio Receiver Power Source Circuit

DESCRIPTION

This circuit provides power to the radio receiver.

WIRING DIAGRAM

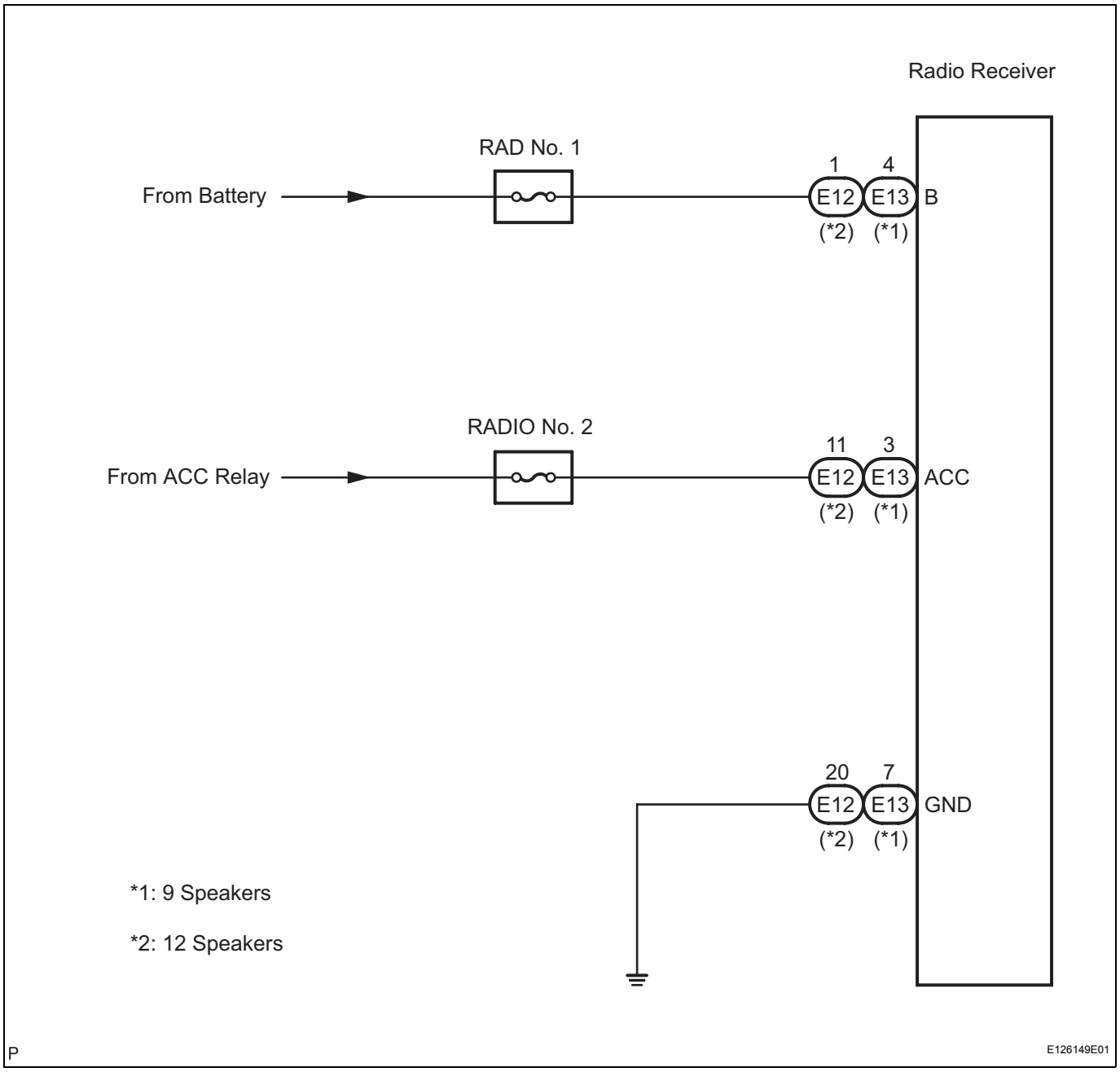

AV

INSPECTION PROCEDURE

1	INSPECT RADIO RECEIVER

Wire Harness View (12 Speaker):

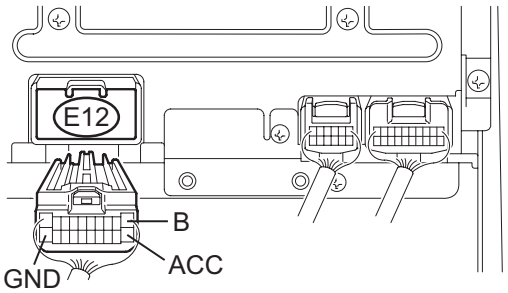

Wire Harness View

(9 Speaker, 6 CD Type):

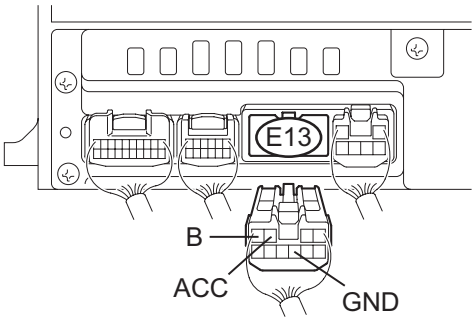

Wire Harness View

(9 Speaker, 1 CD Type):

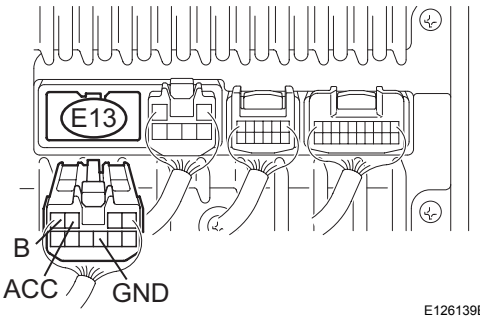

P E126139E02

(a) Disconnect the radio receiver E12 or E13 connector.
(b) Measure the resistance according to the value(s) in the table below.

Standard resistance

Tester connection	Condition	Specified condition
GND - Body ground	Always	Below 1 Ω

(c) Measure the voltage according to the value(s) in the table below.

Standard voltage

Tester connection	Condition	Specified condition
B - GND	Always	10 to 14 V
ACC - GND	Ignition switch on (ACC)	10 to 14 V

NG → **REPAIR OR REPLACE HARNESS OR CONNECTOR**

OK

PROCEED TO NEXT CIRCUIT INSPECTION SHOWN IN PROBLEM SYMPTOMS TABLE

AV

Stereo Component Amplifier Power Source Circuit

DESCRIPTION

This circuit provides power to the stereo component amplifier.

WIRING DIAGRAM

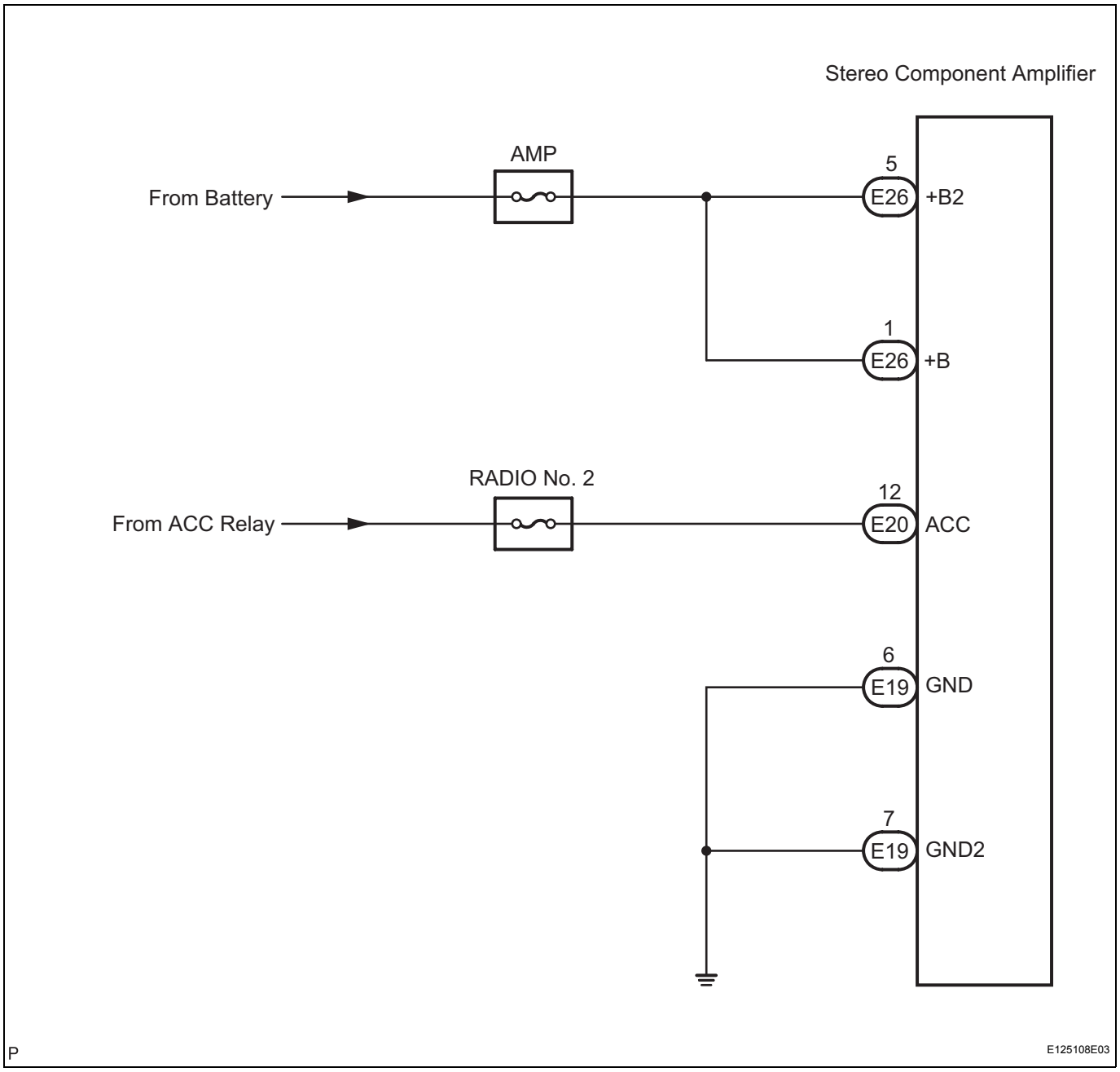

INSPECTION PROCEDURE

1	INSPECT STEREO COMPONENT AMPLIFIER

Wire Harness View:

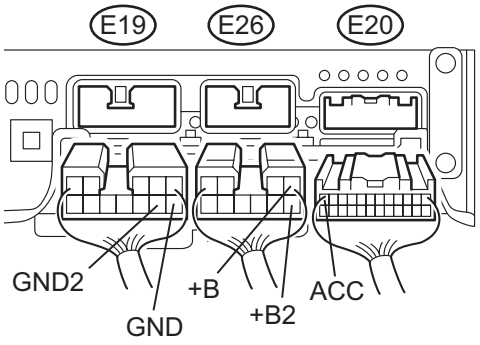

N E126146E01

(a) Disconnect the stereo component amplifier E19, E20, and E26 connectors.
(b) Measure the resistance according to the value(s) in the table below.

Standard resistance

Tester connection	Condition	Specified condition
GND - Body ground	Always	Below 1 Ω
GND2 - Body ground	Always	Below 1 Ω

(c) Measure the voltage according to the value(s) in the table below.

Standard voltage

Tester connection	Condition	Specified condition
B+ - GND	Always	10 to 14 V
+B2 - GND	Always	10 to 14 V
ACC - GND	Ignition switch on (ACC)	10 to 14 V

NG → **REPAIR OR REPLACE HARNESS OR CONNECTOR**

OK

PROCEED TO NEXT CIRCUIT INSPECTION SHOWN IN PROBLEM SYMPTOMS TABLE

AV

Multi-display Power Source Circuit

DESCRIPTION

This is the power source circuit to operate the multi-display (accessory meter).

WIRING DIAGRAM

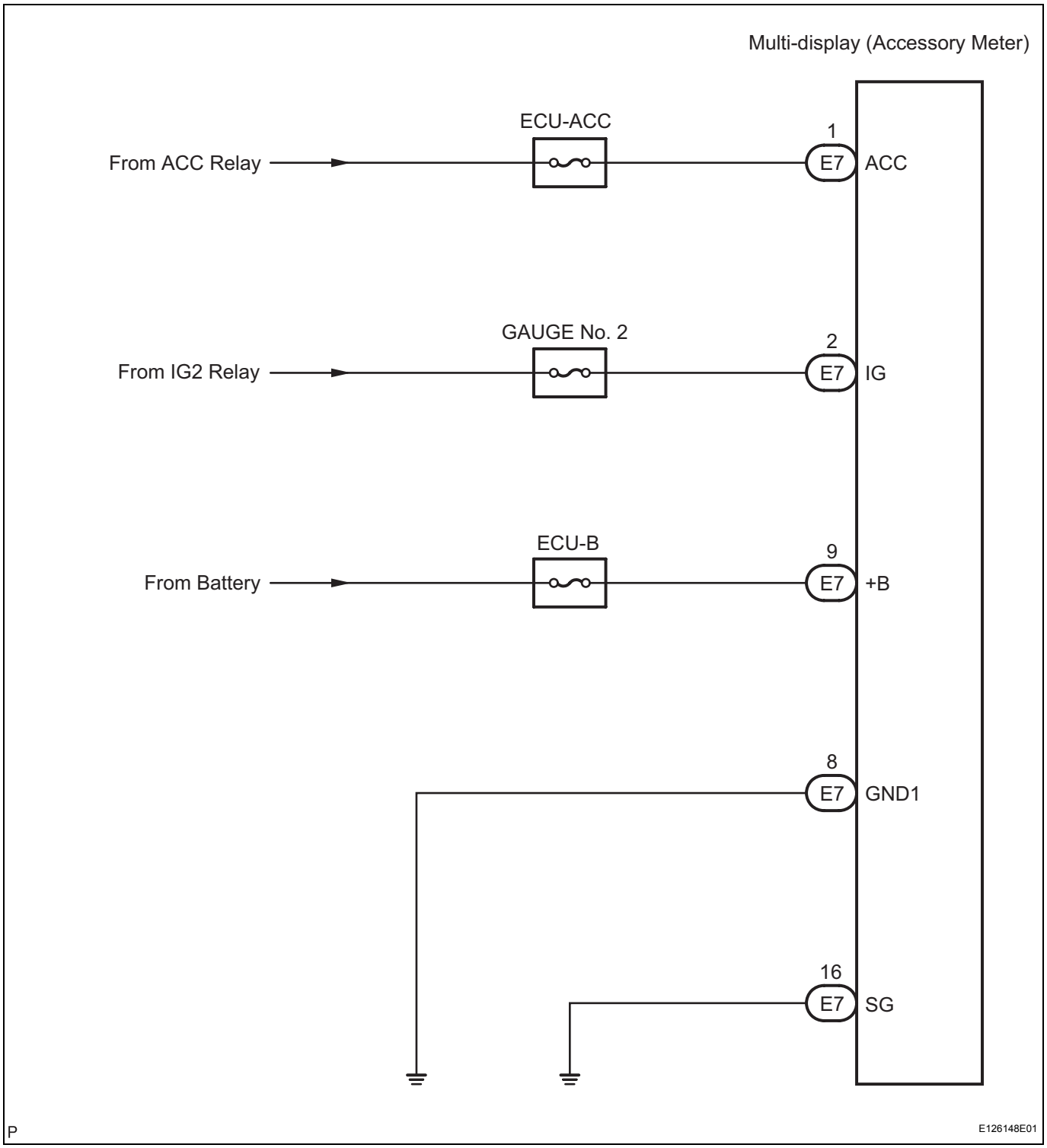

INSPECTION PROCEDURE

1	INSPECT MULTI-DISPLAY (ACCESSORY METER)

Wire Harness View:

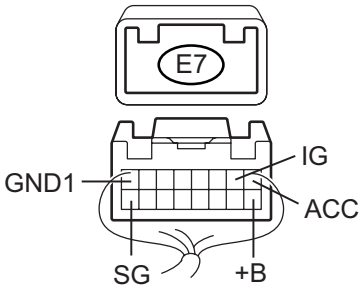

H

E126147E01

(a) Disconnect the multi-display (accessory meter) E7 connector.

(b) Measure the resistance according to the value(s) in the table below.

Standard resistance

Tester connection	Condition	Specified condition
GND1 - Body ground	Always	Below 1 Ω
SG - Body ground	Always	Below 1 Ω

(c) Measure the voltage according to the value(s) in the table below.

Standard voltage

Tester connection	Condition	Specified condition
+B - GND1	Always	10 to 14 V
ACC - GND1	Ignition switch on (ACC)	10 to 14 V
IG - GND1	Ignition switch on (IG)	10 to 14 V

NG → **REPAIR OR REPLACE HARNESS OR CONNECTOR**

OK

PROCEED TO NEXT CIRCUIT INSPECTION SHOWN IN PROBLEM SYMPTOMS TABLE

AV

Gateway ECU Power Source Circuit

DESCRIPTION

This is the power source circuit to operate the gateway ECU.

WIRING DIAGRAM

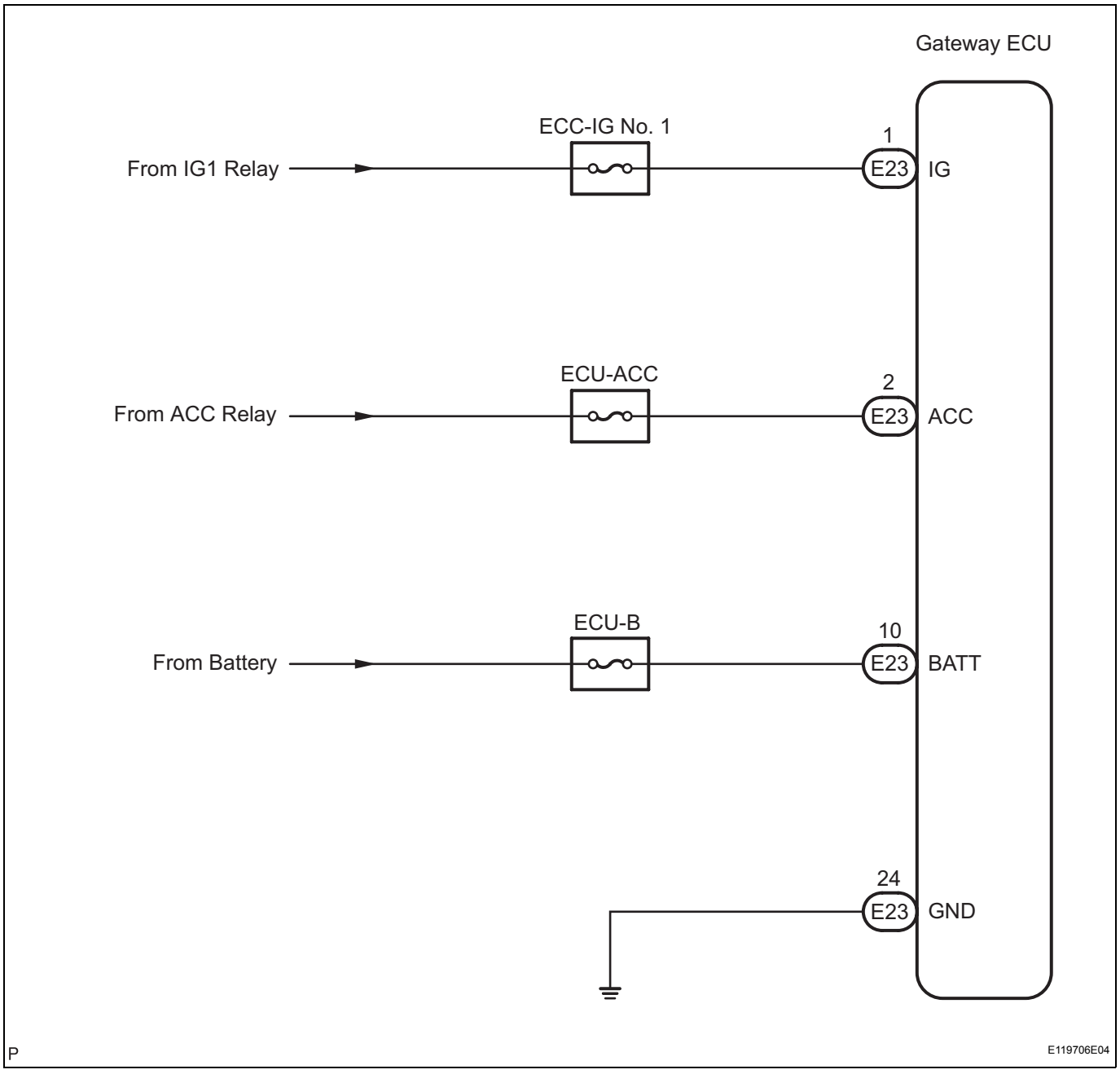

INSPECTION PROCEDURE

1	**INSPECT GATEWAY ECU**

Wire Harness View:

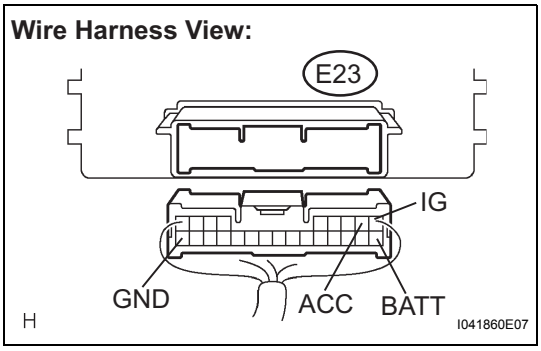

(a) Disconnect the gateway ECU connector E23.
(b) Measure the resistance according to the value(s) in the table below.

Standard resistance

Tester connection	Condition	Specified condition
GND - Body ground	Always	Below 1 Ω

(c) Measure the voltage according to the value(s) in the table below.

Standard voltage

Tester connection	Condition	Specified condition
BATT - GND	Always	10 to 14 V
ACC - GND	Ignition switch on (ACC)	10 to 14 V
IG - GND	Ignition switch on (IG)	10 to 14 V

AV

NG → **REPAIR OR REPLACE HARNESS OR CONNECTOR**

OK

PROCEED TO NEXT CIRCUIT INSPECTION SHOWN IN PROBLEM SYMPTOMS TABLE

Tape Player Power Source Circuit

DESCRIPTION

This circuit provides power to the tape player.

WIRING DIAGRAM

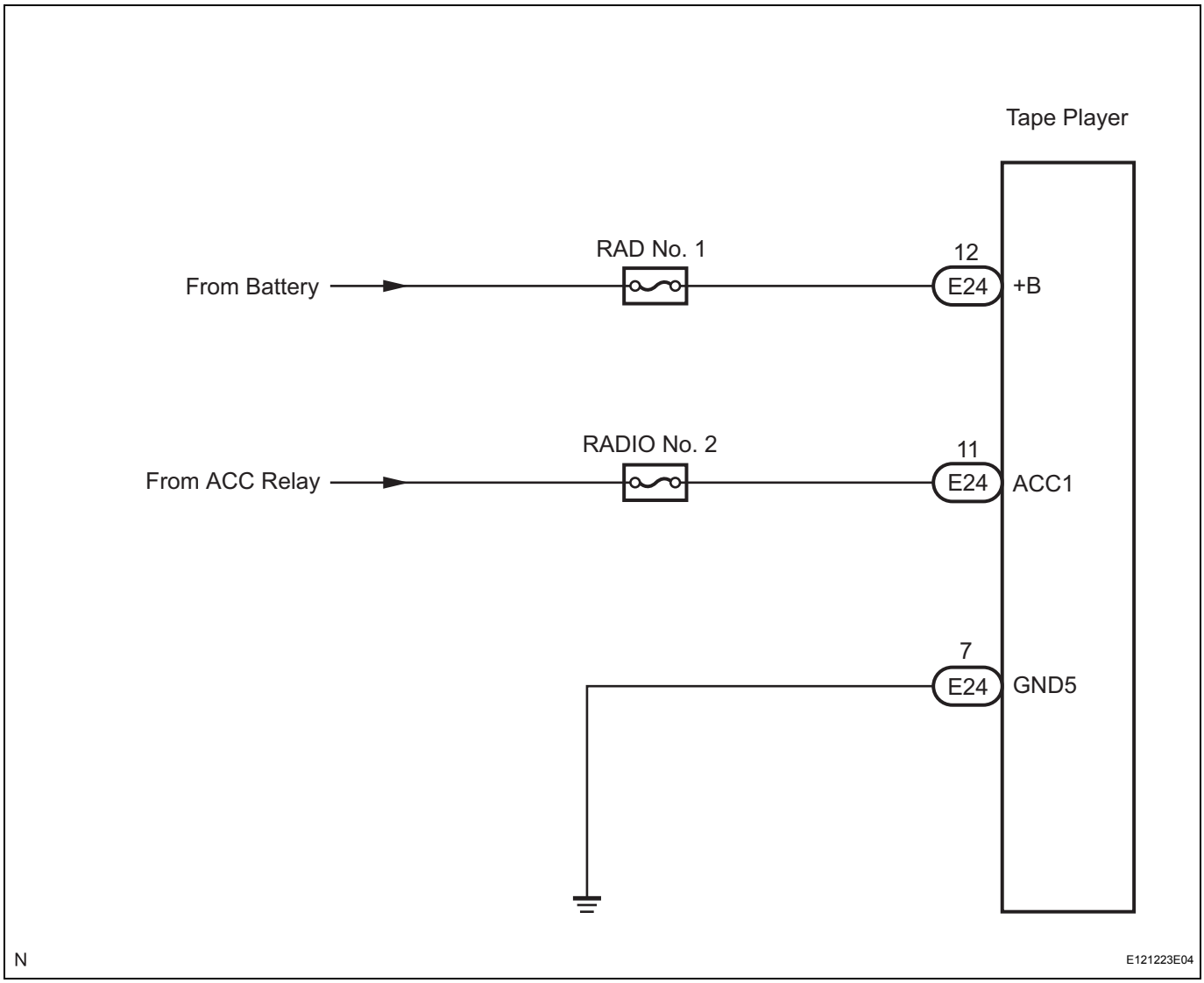

INSPECTION PROCEDURE

1	**INSPECT TAPE PLAYER**

Wire Harness View:

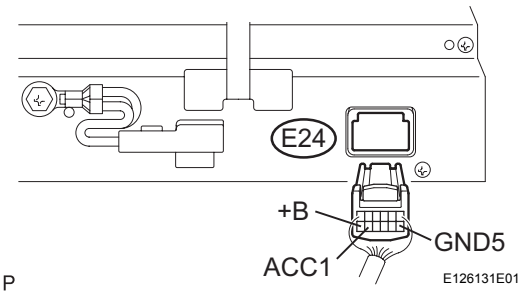

(a) Disconnect the tape player E24 connector.
(b) Measure the resistance according to the value(s) in the table below.

Standard resistance

Tester Connection	Condition	Specified Condition
GND5 - Body ground	Always	Below 1 Ω

(c) Measure the voltage according to the value(s) in the table below.

Standard voltage

Tester Connection	Condition	Specified Condition
+B - GND	Always	10 to 14 V
ACC1 - GND	Ignition switch on (ACC)	10 to 14 V

AV

NG → **REPAIR OR REPLACE HARNESS OR CONNECTOR**

OK

PROCEED TO NEXT CIRCUIT INSPECTION SHOWN IN PROBLEM SYMPTOMS TABLE

RADIO RECEIVER

COMPONENTS

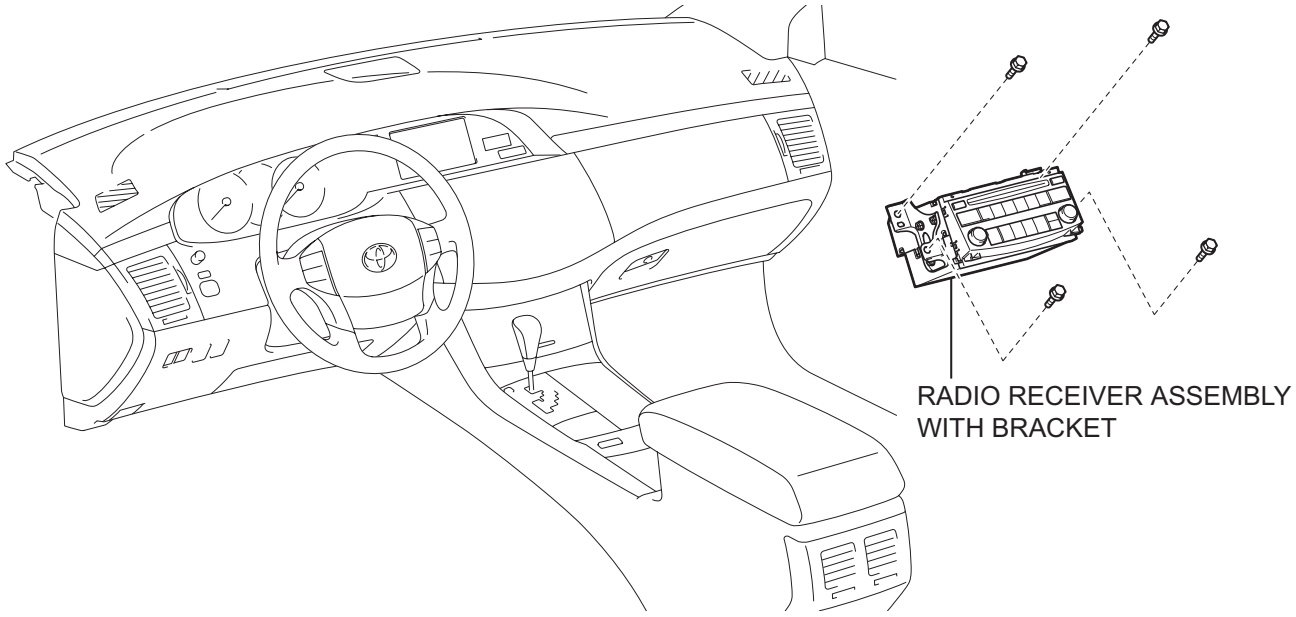

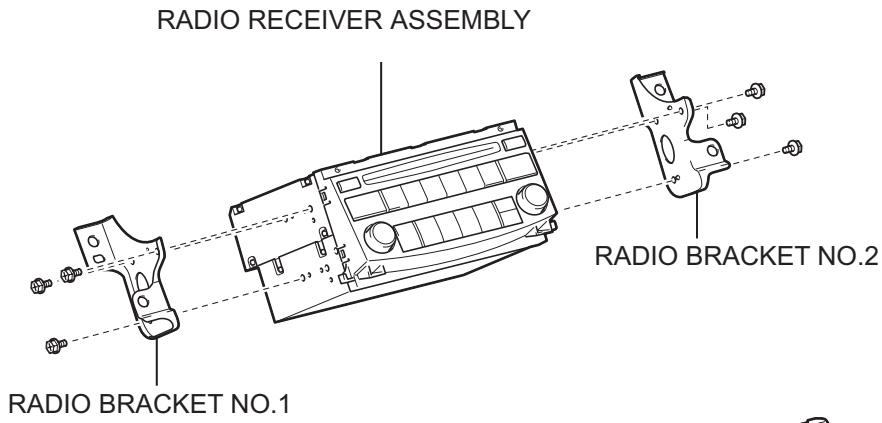

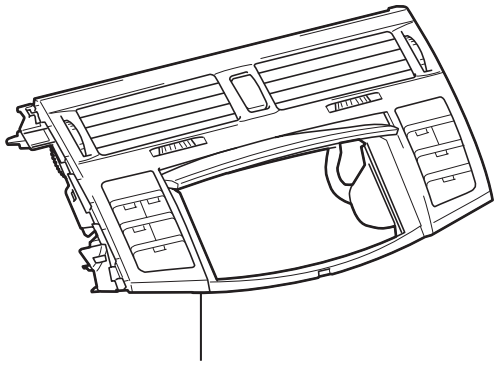

P

E112683E01

AV

AV

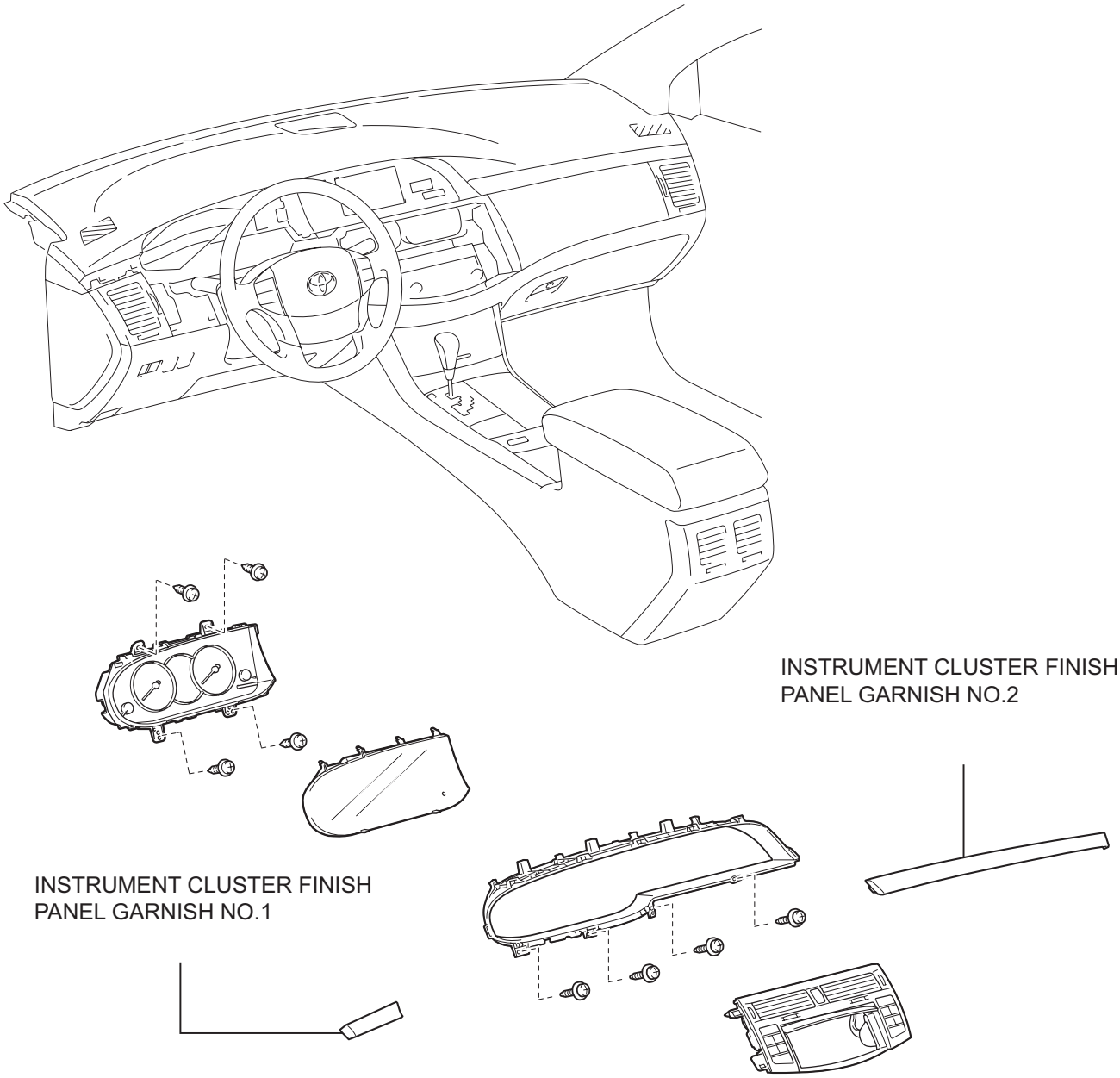

P

B115010E04

REMOVAL

1. **REMOVE INSTRUMENT CLUSTER FINISH PANEL GARNISH NO. 1 (See page IP-9)**
2. **REMOVE INSTRUMENT CLUSTER FINISH PANEL GARNISH NO. 2 (See page IP-9)**
3. **REMOVE INSTRUMENT PANEL FINISH PLATE (w/o Smart Key System) (See page IP-9)**
4. **REMOVE INSTRUMENT PANEL SUB-ASSEMBLY (See page IP-9)**
5. **REMOVE INSTRUMENT CLUSTER FINISH PANEL SUB-ASSEMBLY CENTER (See page AC-180)**
6. **REMOVE RADIO RECEIVER ASSEMBLY WITH BRACKET**
   (a) Remove the 4 bolts and pull the radio receiver assembly w/ bracket toward you.
   (b) Disconnect all connectors and remove the radio receiver assembly w/ bracket.

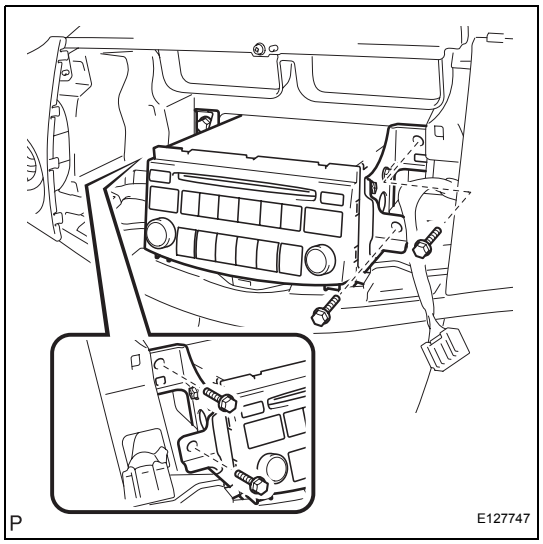

7. **REMOVE RADIO BRACKET NO. 1**
   (a) Remove the 3 bolts and radio bracket No. 1 from the radio receiver assembly w/ bracket.

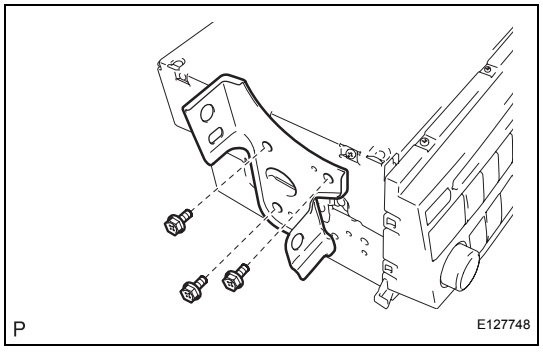

8. **REMOVE RADIO BRACKET NO. 2**
   (a) Remove the 3 bolts and radio bracket No. 2 from the radio receiver assembly w/ bracket.
9. **REMOVE RADIO RECEIVER ASSEMBLY**

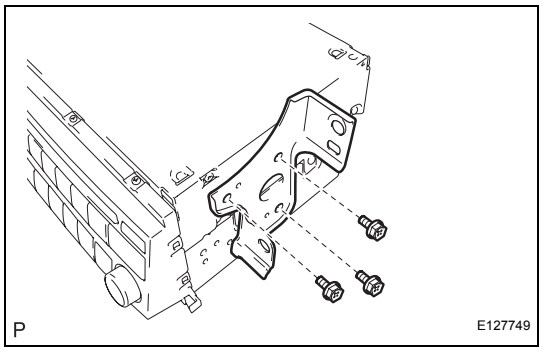

AV

INSTALLATION

1. **INSTALL RADIO RECEIVER ASSEMBLY**
2. **INSTALL RADIO BRACKET NO. 2**
3. **INSTALL RADIO BRACKET NO. 1**
4. **INSTALL RADIO RECEIVER ASSEMBLY WITH BRACKET**
5. **INSTALL INSTRUMENT CLUSTER FINISH PANEL SUB-ASSEMBLY CENTER**
6. **INSTALL INSTRUMENT PANEL SUB-ASSEMBLY**
7. **INSTALL INSTRUMENT PANEL FINISH PLATE (w/o Smart Key System)**
8. **INSTALL INSTRUMENT CLUSTER FINISH PANEL GARNISH NO. 2**
9. **INSTALL INSTRUMENT CLUSTER FINISH PANEL GARNISH NO. 1**

MULTI-DISPLAY

COMPONENTS

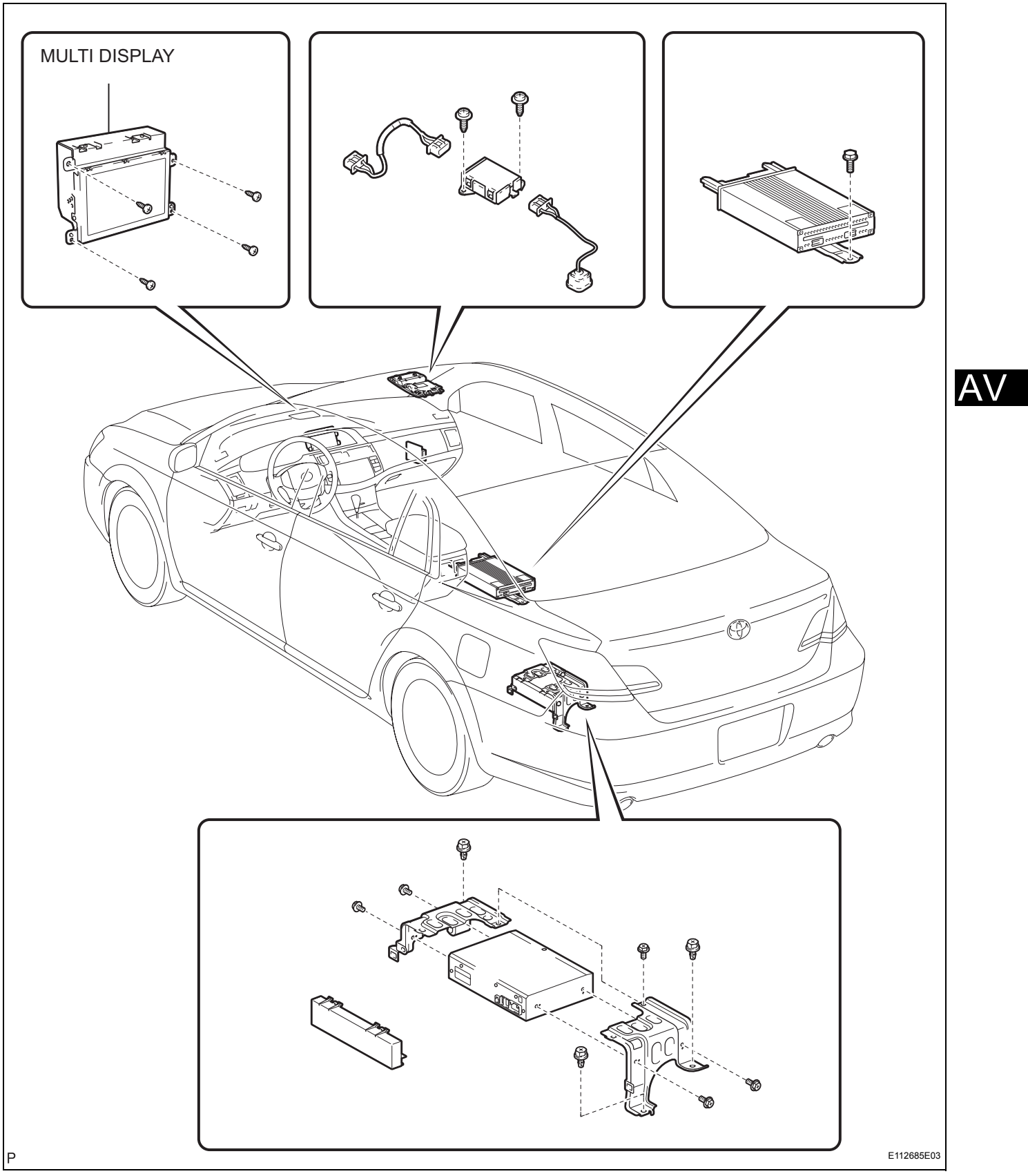

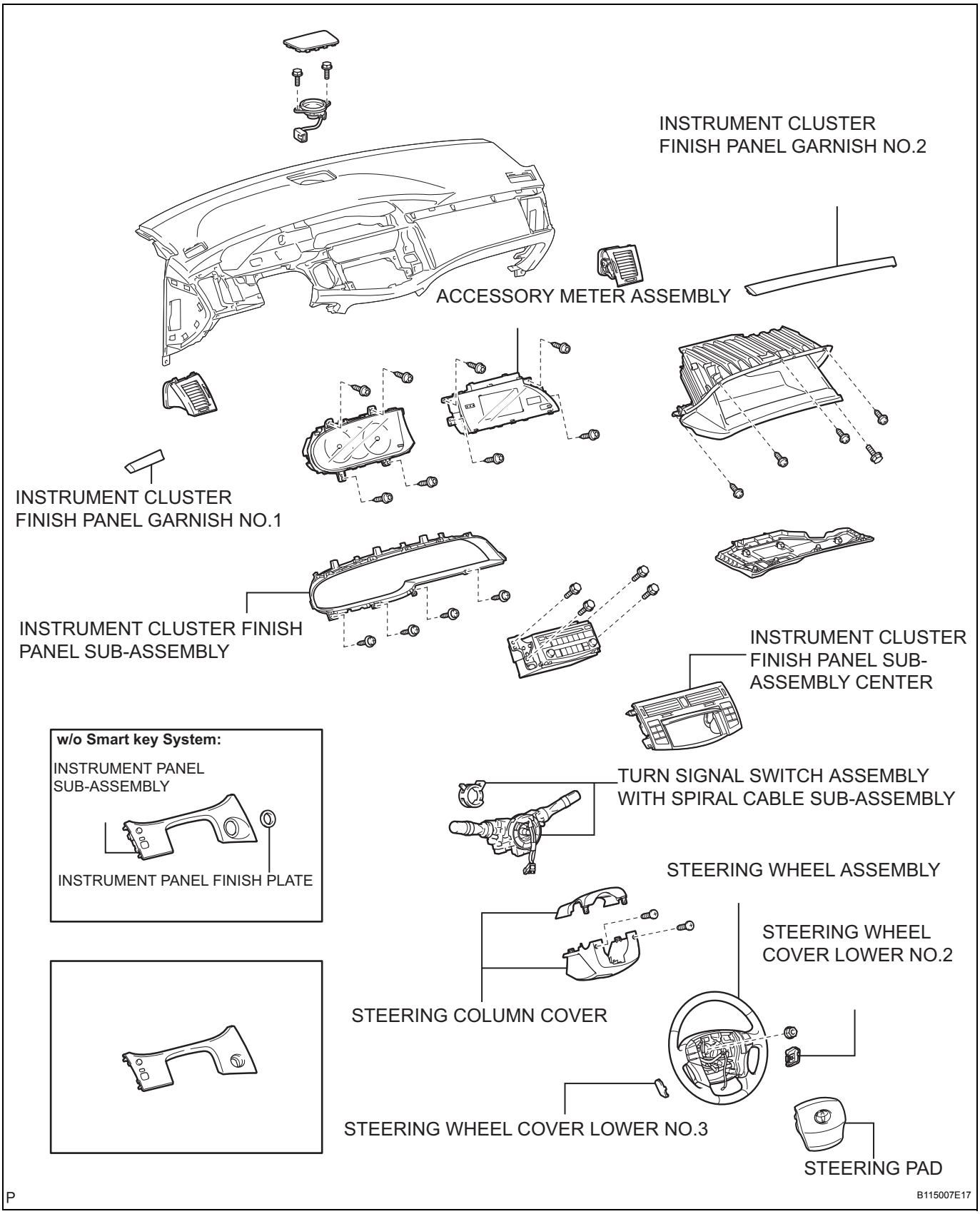
INSTRUMENT CLUSTER
FINISH PANEL GARNISH NO.2
ACCESSORY METER ASSEMBLY
INSTRUMENT CLUSTER
FINISH PANEL GARNISH NO.1
INSTRUMENT CLUSTER FINISH
PANEL SUB-ASSEMBLY
INSTRUMENT CLUSTER
FINISH PANEL SUB-
ASSEMBLY CENTER
w/o Smart key System:
INSTRUMENT PANEL
SUB-ASSEMBLY
INSTRUMENT PANEL FINISH PLATE
TURN SIGNAL SWITCH ASSEMBLY
WITH SPIRAL CABLE SUB-ASSEMBLY
STEERING WHEEL ASSEMBLY
STEERING WHEEL
COVER LOWER NO.2
STEERING COLUMN COVER
STEERING WHEEL COVER LOWER NO.3
STEERING PAD
P
B115007E17

REMOVAL

1. **TABLE OF BOLT, SCREW AND NUT (See page IP-8)**
2. **DISCONNECT CABLE FROM NEGATIVE BATTERY TERMINAL**
   Wait for 90 seconds after disconnecting the cable to prevent the airbag working.
3. **REMOVE STEERING WHEEL COVER LOWER NO. 2 (See page RS-304)**
4. **REMOVE STEERING WHEEL COVER LOWER NO. 3 (See page RS-304)**
5. **REMOVE STEERING PAD (See page RS-304)**
6. **REMOVE STEERING WHEEL ASSEMBLY (See page SR-36)**
7. **REMOVE STEERING COLUMN COVER (See page SR-36)**
8. **REMOVE TURN SIGNAL SWITCH ASSEMBLY WITH SPIRAL CABLE (See page SR-36)**
9. **REMOVE INSTRUMENT CLUSTER FINISH PANEL GARNISH NO. 1 (See page IP-9)**
10. **REMOVE INSTRUMENT CLUSTER FINISH PANEL GARNISH NO. 2 (See page IP-9)**
11. **REMOVE INSTRUMENT PANEL FINISH PLATE (See page IP-9)**
12. **REMOVE INSTRUMENT PANEL SUB-ASSEMBLY (See page IP-9)**
13. **REMOVE INSTRUMENT CLUSTER FINISH PANEL SUB-ASSEMBLY CENTER (See page AC-180)**
14. **REMOVE INSTRUMENT CLUSTER FINISH PANEL SUB-ASSEMBLY (See page IP-10)**
15. **REMOVE ACCESSORY METER ASSEMBLY (See page IP-10)**
16. **REMOVE MULTI DISPLAY**
    (a) Disengage the 9 claws and remove the back cover.

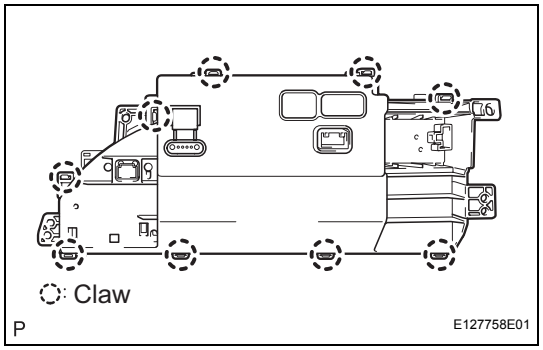

AV

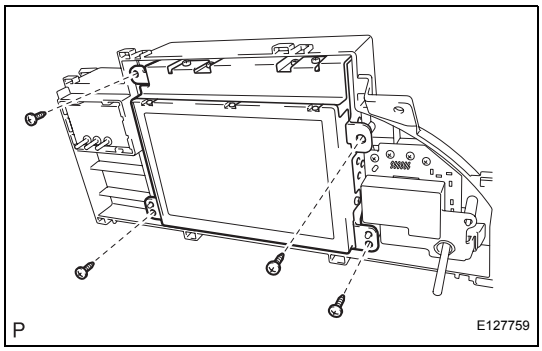

(b) Remove the 4 screws and multi display.

INSTALLATION

1. INSTALL MULTI DISPLAY
2. INSTALL ACCESSORY METER ASSEMBLY
3. INSTALL INSTRUMENT CLUSTER FINISH PANEL SUB-ASSEMBLY
4. INSTALL INSTRUMENT CLUSTER FINISH PANEL SUB-ASSEMBLY CENTER
5. INSTALL INSTRUMENT PANEL SUB-ASSEMBLY
6. INSTALL INSTRUMENT PANEL FINISH PLATE
7. INSTALL INSTRUMENT CLUSTER FINISH PANEL GARNISH NO. 2
8. INSTALL INSTRUMENT CLUSTER FINISH PANEL GARNISH NO. 1
9. INSTALL TURN SIGNAL SWITCH ASSEMBLY WITH SPIRAL CABLE
10. INSTALL STEERING COLUMN COVER
11. ADJUST SPIRAL CABLE (See page RS-316)
12. INSTALL STEERING WHEEL ASSEMBLY (See page SR-46)
13. INSTALL STEERING PAD (See page RS-305)
14. CONNECT CABLE TO NEGATIVE BATTERY TERMINAL
15. PERFORM SYSTEM INITIALIZE (See page RS-306)
16. INSPECT STEERING PAD (See page RS-305)
17. INSPECT SRS WARNING LIGHT (See page RS-306)

STEREO COMPONENT AMPLIFIER

COMPONENTS

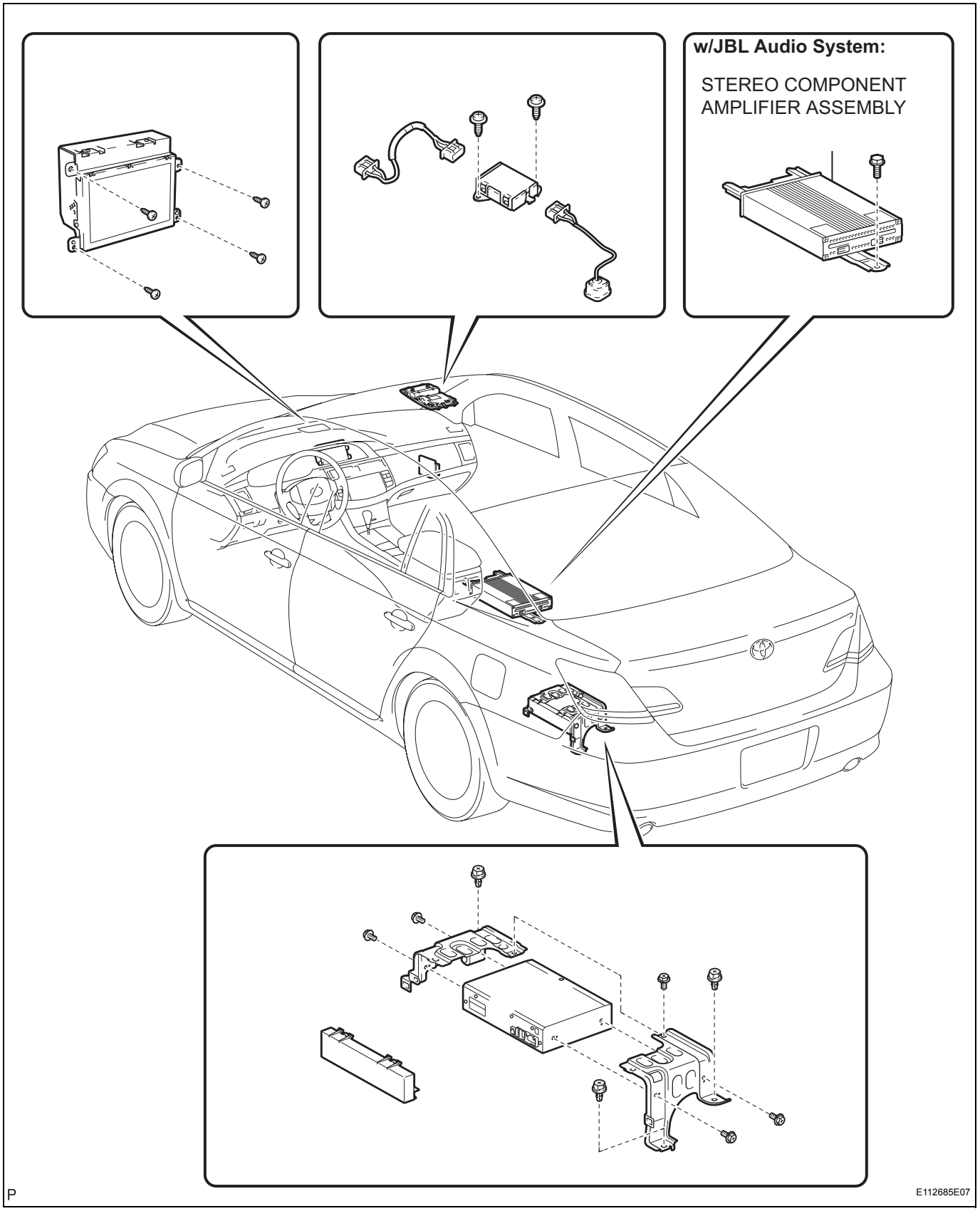

AV

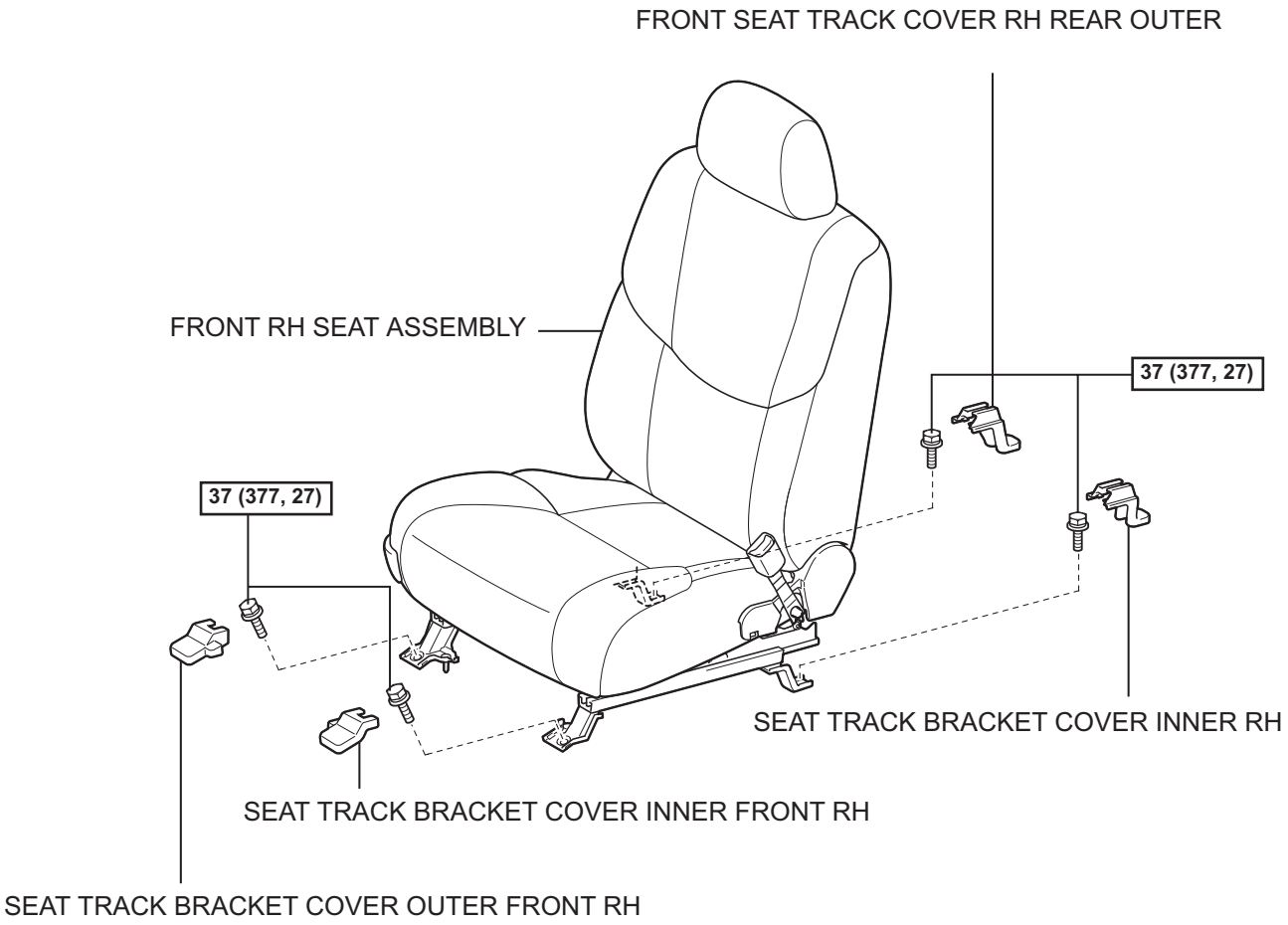

N*m (kgf*cm, ft.*lbf) : Specified torque

P

B115031E08

REMOVAL

1. **REMOVE SEAT TRACK BRACKET COVER OUTER FRONT RH (See page SE-40)**
2. **REMOVE SEAT TRACK BRACKET COVER INNER FRONT RH (See page SE-40)**
3. **REMOVE FRONT SEAT TRACK COVER RH REAR OUTER (See page SE-40)**
4. **REMOVE SEAT TRACK BRACKET COVER INNER RH (See page SE-40)**
5. **REMOVE FRONT RH SEAT ASSEMBLY (See page SE-40)**
6. **REMOVE STEREO COMPONENT AMPLIFIER ASSEMBLY**
   (a) Disconnect all connectors
   (b) Remove the bolt and stereo component amplifier assembly as shown in the illustration.

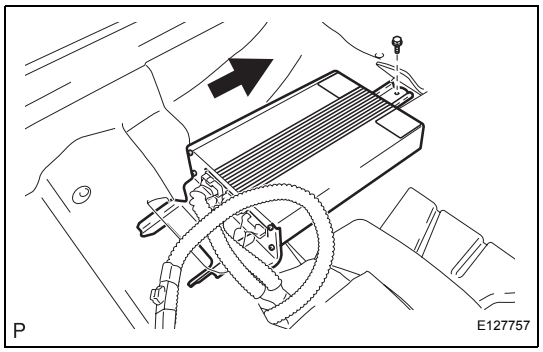

INSTALLATION

1. INSTALL STEREO COMPONENT AMPLIFIER ASSEMBLY
2. INSTALL FRONT RH SEAT ASSEMBLY (See page SE-42)
3. CHECK SEAT SLIDE ADJUSTER LOCKS (See page SE-43)
4. CHECK SEAT HEATER OPERATION (w/ Seat Heater System)
5. INITIALIZE FRONT PASSENGER OCCUPANT CLASSIFICATION SYSTEM (See page SE-43)
6. INSPECT SRS WARNING LIGHT (See page RS-330)

FRONT NO. 1 SPEAKER

COMPONENTS

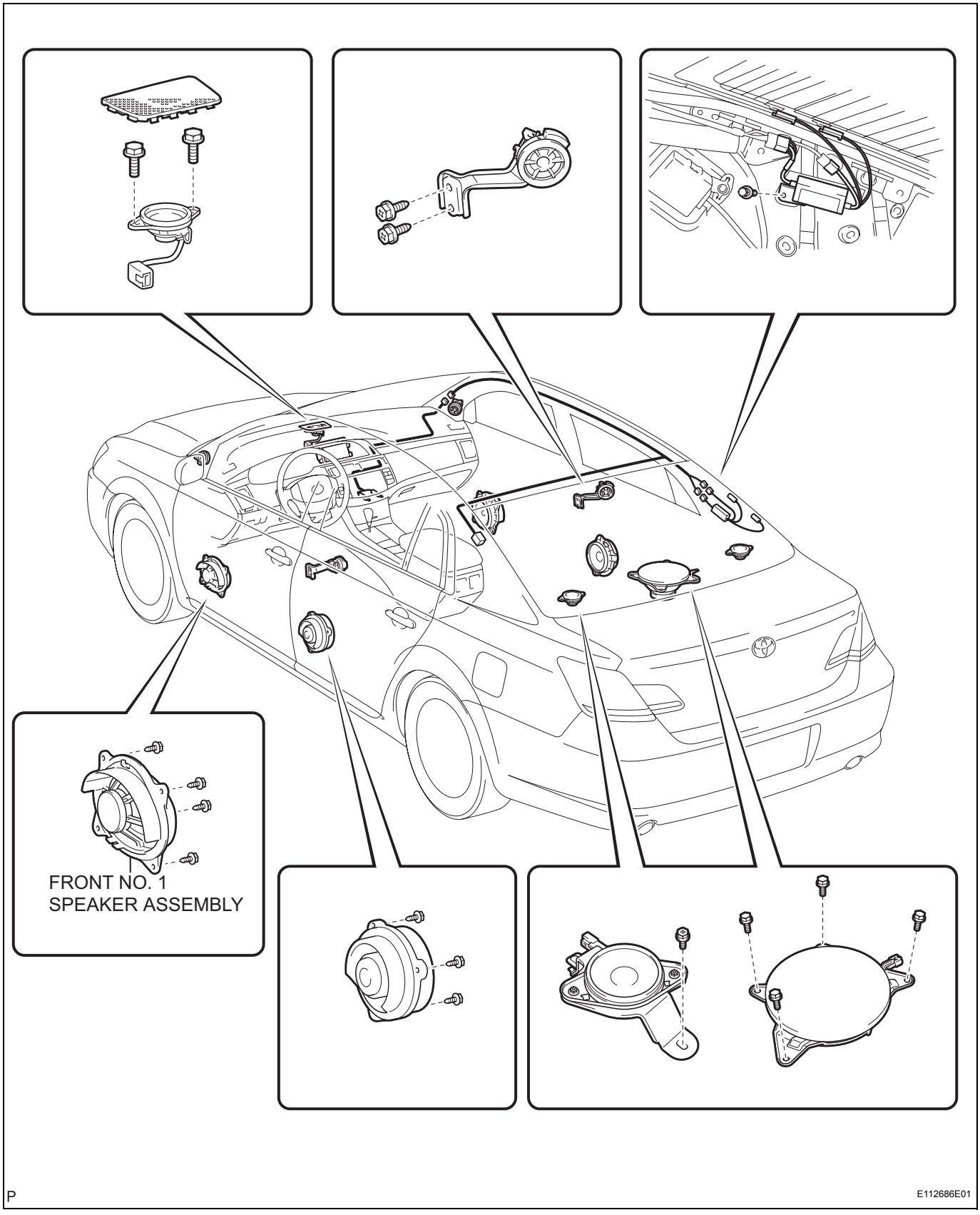

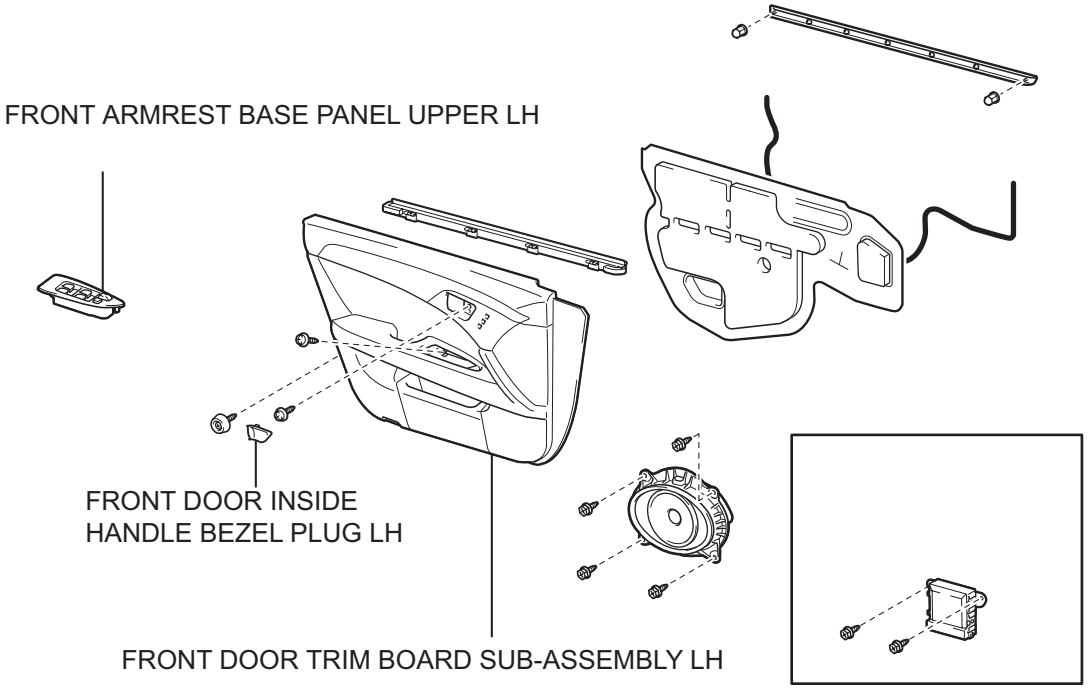

P

B115037E03

ON-VEHICLE INSPECTION

1. INSPECT FRONT NO. 1 SPEAKER

HINT:

Remove interior parts so that the front No. 1 speaker can be seen.

(a) Check the speaker installation.

OK:

The speaker is securely installed.

If the result is not as specified, reinstall the front No. 1 speaker.

(b) Visually check the speaker.

OK:

The cone paper of the speaker is not torn.

If the result is not as specified, replace the front No. 1 speaker.

(c) Speaker resistance check

(1) Disconnect the front No. 1 speaker connector.

(2) Measure the resistance between the terminals of the speaker.

Standard resistance:

9 Speaker System:

Approximately 4 Ω

12 Speaker System:

1.8 to 2.6 Ω

If the result is not as specified, replace the front No. 1 speaker.

REMOVAL

HINT:

- Use the same procedures for the RH side and LH side.
- The procedures listed below are for the LH side.

1. **REMOVE FRONT DOOR LOWER FRAME BRACKET GARNISH LH (See page ED-7)**
2. **REMOVE FRONT DOOR INSIDE HANDLE BEZEL PLUG LH (See page ED-7)**
3. **REMOVE FRONT ARMREST BASE PANEL UPPER LH (See page ED-7)**
4. **REMOVE FRONT DOOR TRIM BOARD SUB-ASSEMBLY LH (See page ED-7)**
5. **REMOVE FRONT NO. 1 SPEAKER ASSEMBLY**
   (a) Disconnect the connector.
   (b) Remove the 4 screws and front No. 1 speaker assembly.

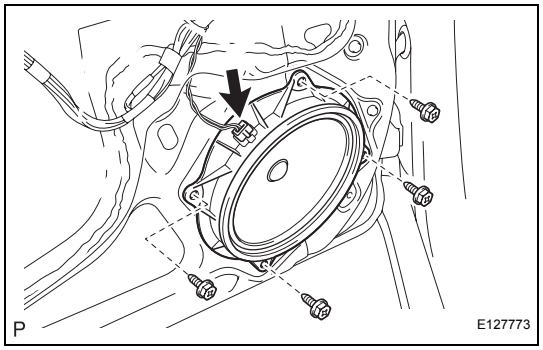

INSTALLATION

1. **INSTALL FRONT NO. 1 SPEAKER ASSEMBLY**
2. **INSTALL FRONT DOOR TRIM BOARD SUB-ASSEMBLY LH**
3. **INSTALL FRONT ARMREST BASE PANEL UPPER LH**
4. **INSTALL FRONT DOOR INSIDE HANDLE BEZEL PLUG LH**
5. **INSTALL FRONT DOOR LOWER FRAME BRACKET GARNISH LH**

FRONT NO. 2 SPEAKER

COMPONENTS

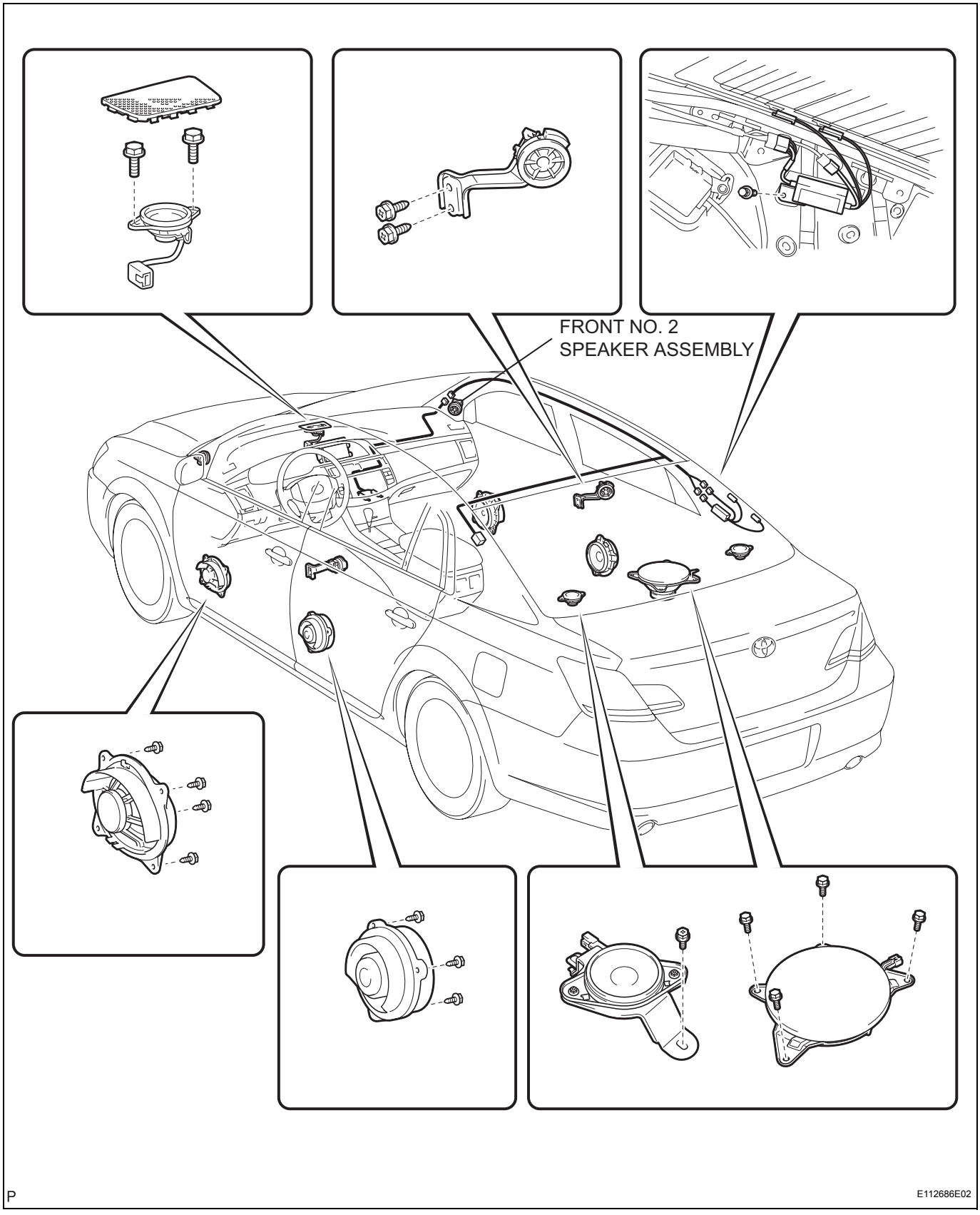

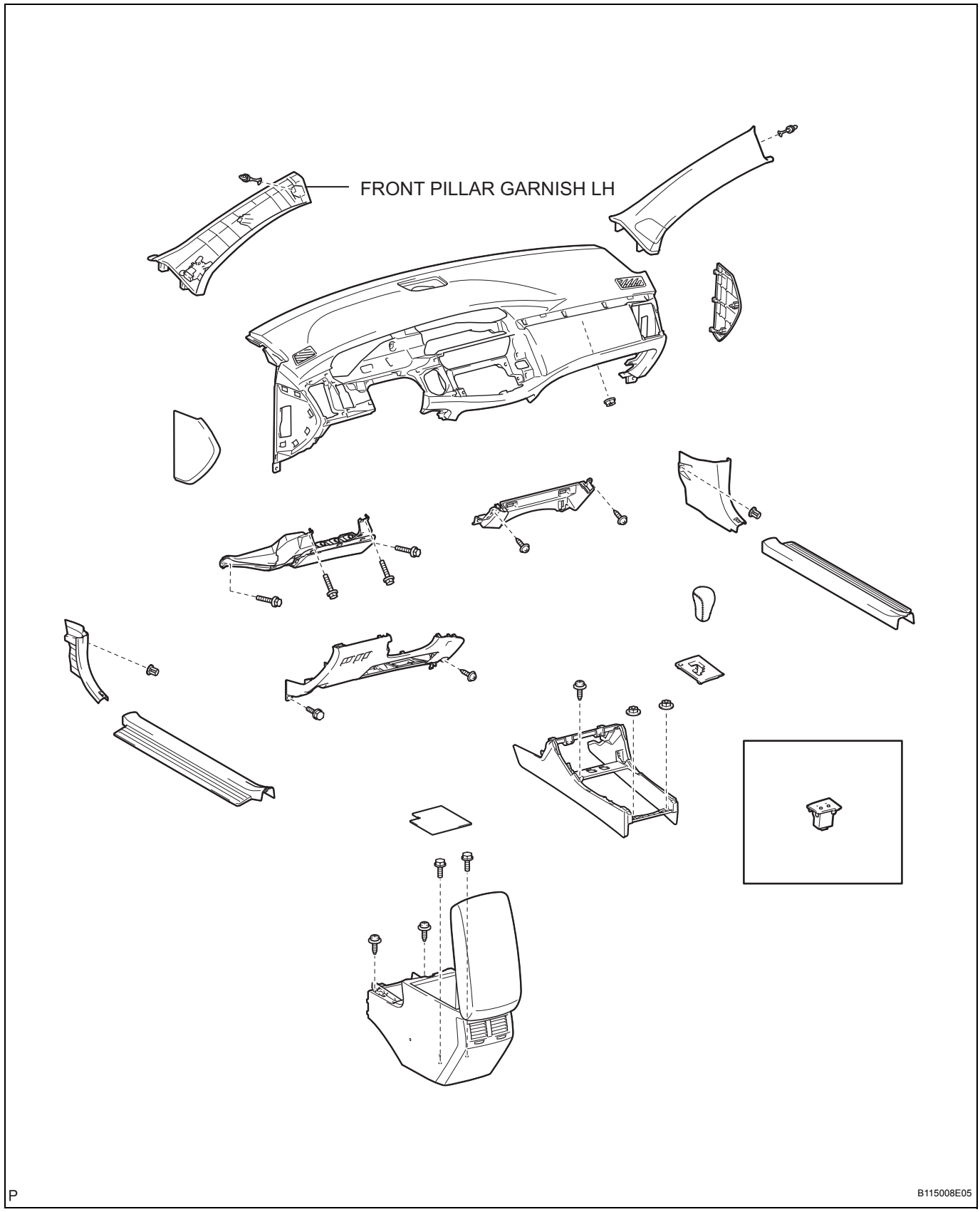
FRONT PILLAR GARNISH LH
P
B115008E05

ON-VEHICLE INSPECTION

1. INSPECT FRONT NO. 2 SPEAKER

HINT:

Remove interior parts so that the front No. 2 speaker can be seen.

(a) Check the speaker installation.

OK:

The speaker is securely installed.

If the result is not as specified, reinstall the front No. 2 speaker.

(b) Visually check the speaker.

OK:

The cone paper of the speaker is not torn.

If the result is not as specified, replace the front No. 2 speaker.

REMOVAL

HINT:

- Use the same procedures for the RH side and LH side.
- The procedures listed below are for the LH side.

1. **REMOVE FRONT PILLAR GARNISH LH (See page IR-15)**

2. **REMOVE FRONT NO. 2 SPEAKER ASSEMBLY**
   (a) Disengage the 3 claws and remove the front No. 2 speaker assembly.

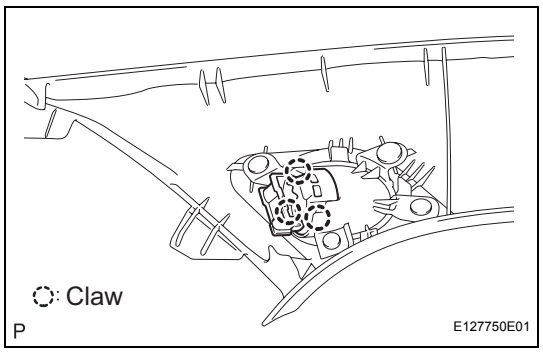

INSTALLATION

1. **INSTALL FRONT NO. 2 SPEAKER ASSEMBLY**
2. **INSTALL FRONT PILLAR GARNISH LH (See page IR-19)**

FRONT STEREO COMPONENT SPEAKER

COMPONENTS

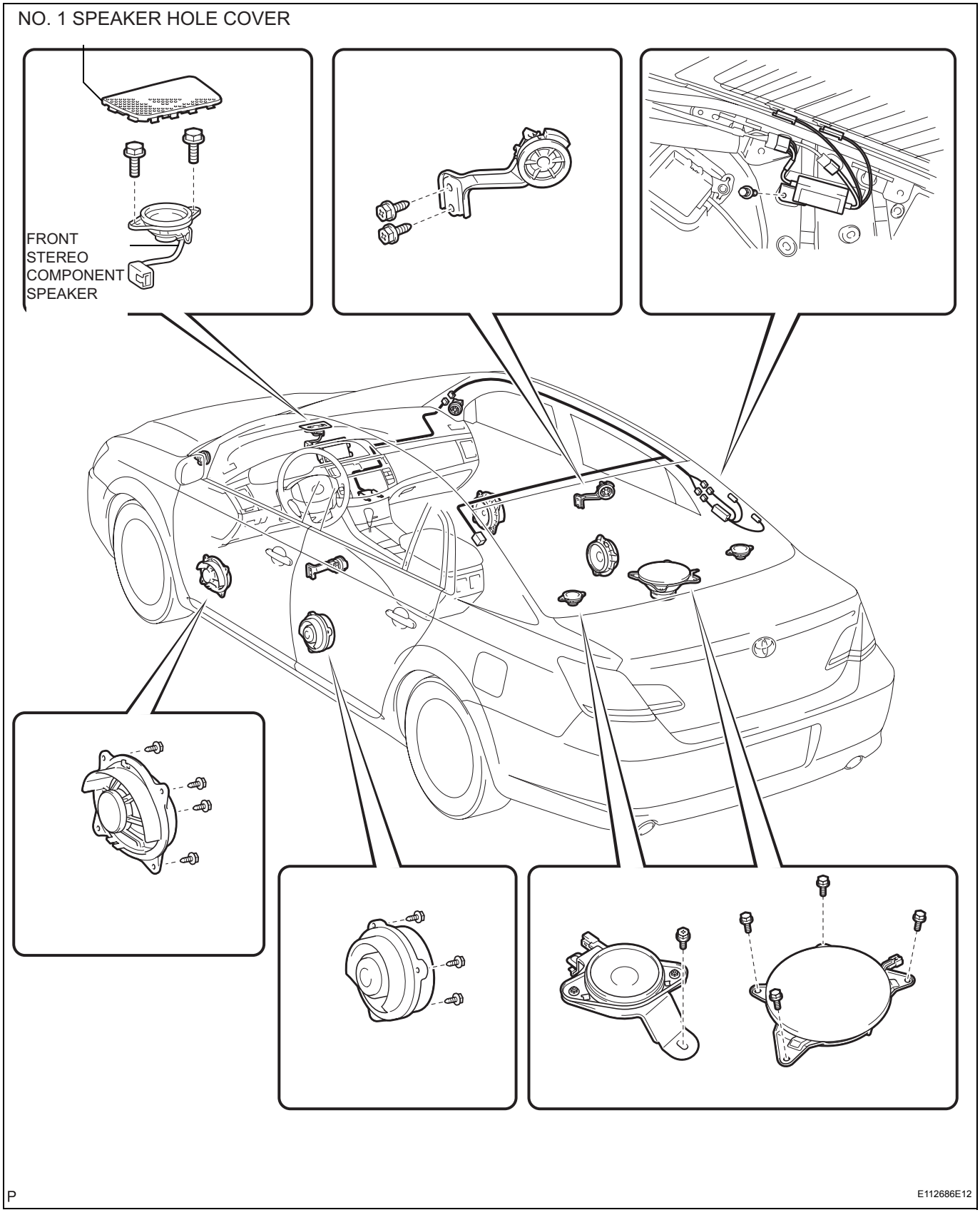

ON-VEHICLE INSPECTION

1. INSPECT FRONT STEREO COMPONENT SPEAKER

HINT:

Remove interior parts so that the front stereo component speaker can be seen.

(a) Check the speaker installation.

OK:

The speaker is securely installed.

If the result is not as specified, reinstall the front stereo component speaker.

(b) Visually check the speaker.

OK:

The cone paper of the speaker is not torn.

If the result is not as specified, replace the front stereo component speaker.

(c) Speaker resistance check

(1) Disconnect the front stereo component speaker connector.

(2) Measure the resistance between the terminals of the speaker.

Standard resistance (9 Speaker System)

Tester Connection	Condition	Specified Condition
E10-1 - E10-2	Always	Approx. 40 Ω
E10-3 - E10-4	Always	Approx. 40 Ω

Standard resistance (12 Speaker System)

Tester Connection	Condition	Specified Condition
E10-1 - E10-2	Always	1.5 to 2.1 Ω

If the result is not as specified, replace the front stereo component speaker.

AV

9 Speaker:

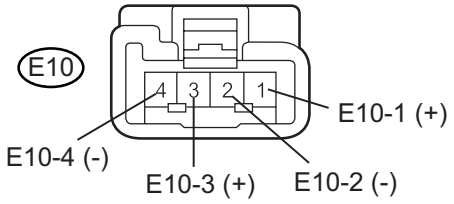

12 Speaker:

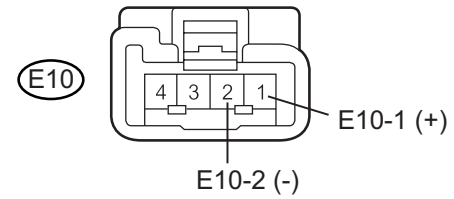

H

E126143E01

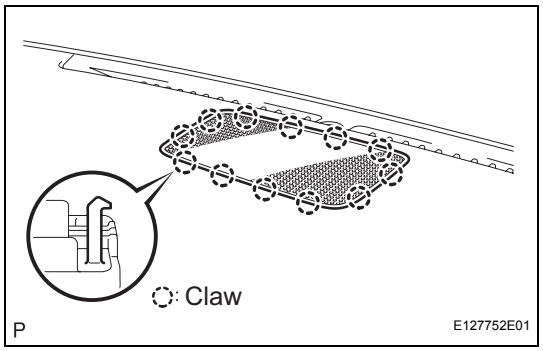

REMOVAL

1. REMOVE NO. 1 SPEAKER HOLE COVER

(a) Disengage the 12 claws and remove the No. 1 speaker hole cover.

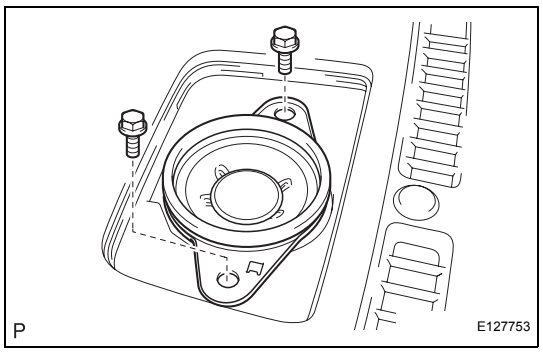

2. REMOVE FRONT STEREO COMPONENT SPEAKER

(a) Remove the 2 bolts.

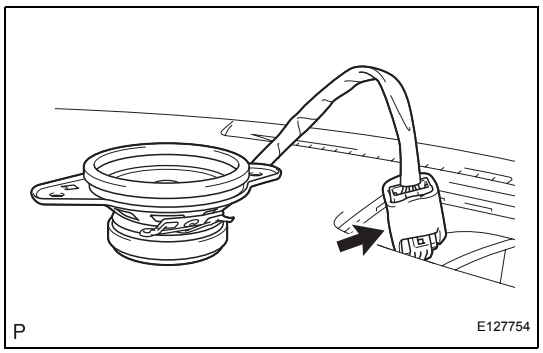

(b) Pull the front stereo component speaker assembly toward you.

(c) Disconnect the connector and remove the front stereo component speaker assembly.

AV

INSTALLATION

1. **INSTALL FRONT STEREO COMPONENT SPEAKER**
2. **INSTALL NO. 1 SPEAKER HOLE COVER**

STEREO COMPONENT SPEAKER

COMPONENTS

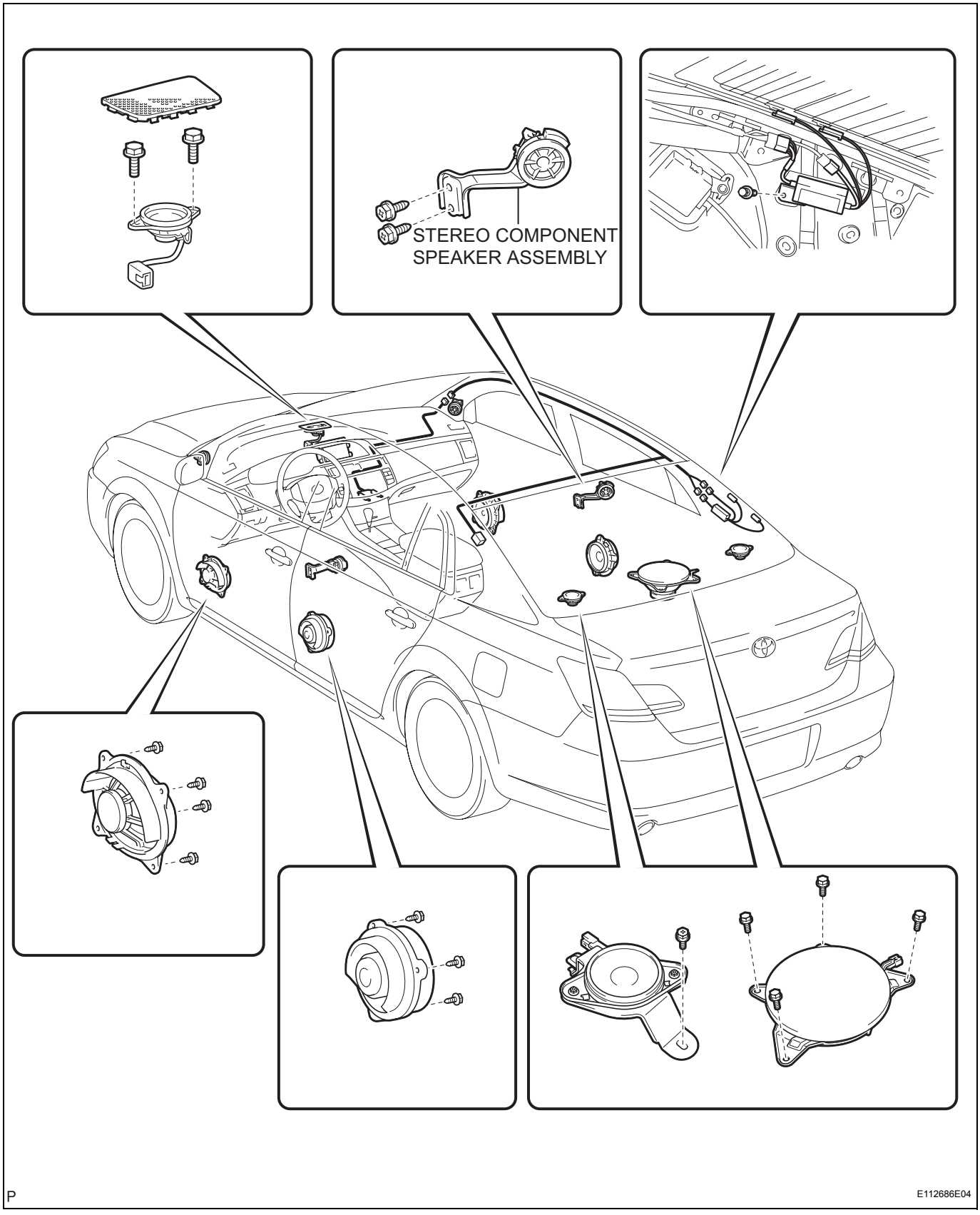

AV

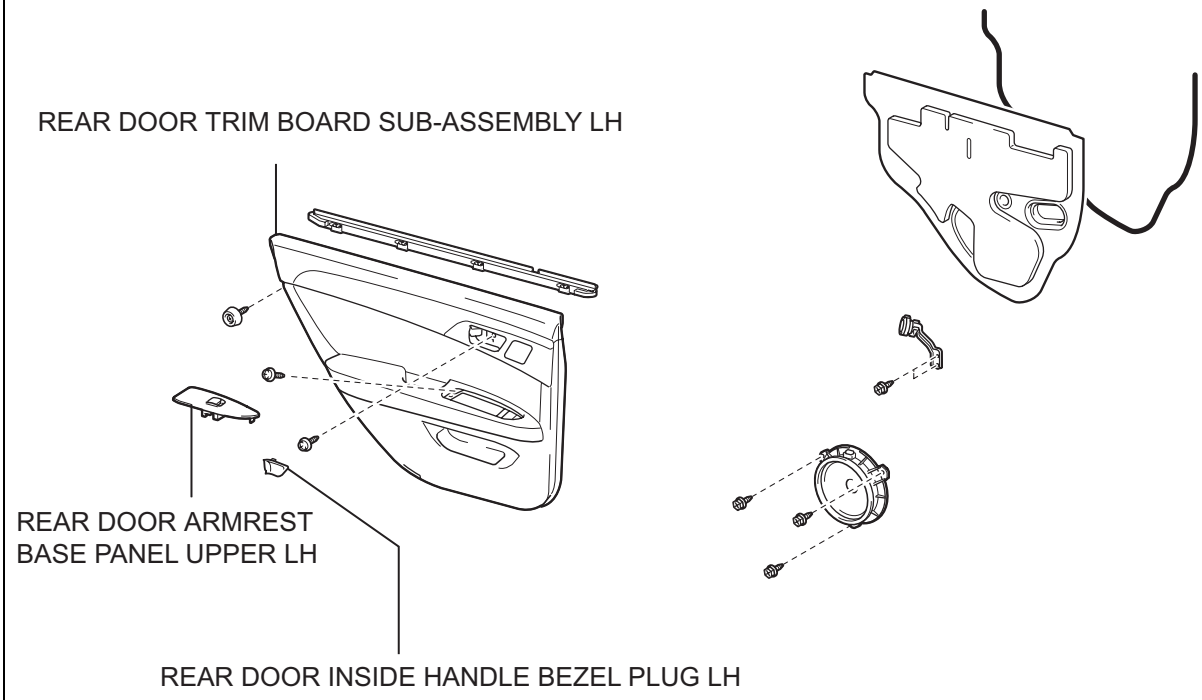

P

B115038E04

AV

ON-VEHICLE INSPECTION

1. INSPECT STEREO COMPONENT SPEAKER

HINT:

Remove interior parts so that the stereo component speaker can be seen.

(a) Check the speaker installation.

OK:

The speaker is securely installed.

If the result is not as specified, reinstall the stereo component speaker.

(b) Visually check the speaker.

OK:

The cone paper of the speaker is not torn.

If the result is not as specified, replace the stereo component speaker.

REMOVAL

HINT:

- Use the same procedures for the RH side and LH side.
- The procedures listed below are for the LH side.

1. **REMOVE REAR DOOR INSIDE HANDLE BEZEL PLUG LH (See page ED-18)**
2. **REMOVE REAR DOOR ARMREST BASE PANEL UPPER LH (See page ED-18)**
3. **REMOVE REAR DOOR TRIM BOARD SUB-ASSEMBLY LH (See page ED-18)**
4. **REMOVE STEREO COMPONENT SPEAKER ASSEMBLY**
   (a) Disconnect the connector.
   (b) Remove the 2 screws and stereo component speaker assembly.

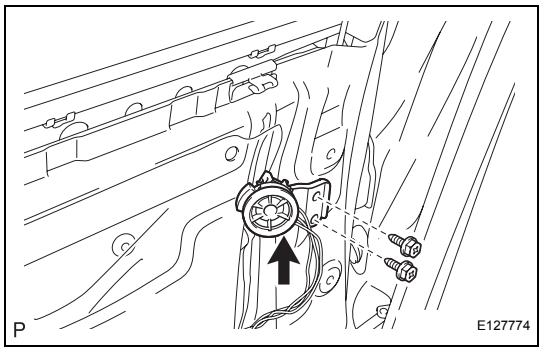

INSTALLATION

1. **INSTALL STEREO COMPONENT SPEAKER ASSEMBLY**
2. **INSTALL REAR DOOR TRIM BOARD SUB-ASSEMBLY LH**
3. **INSTALL REAR DOOR ARMREST BASE PANEL UPPER LH**
4. **INSTALL REAR DOOR INSIDE HANDLE BEZEL PLUG LH**

REAR SPEAKER

COMPONENTS

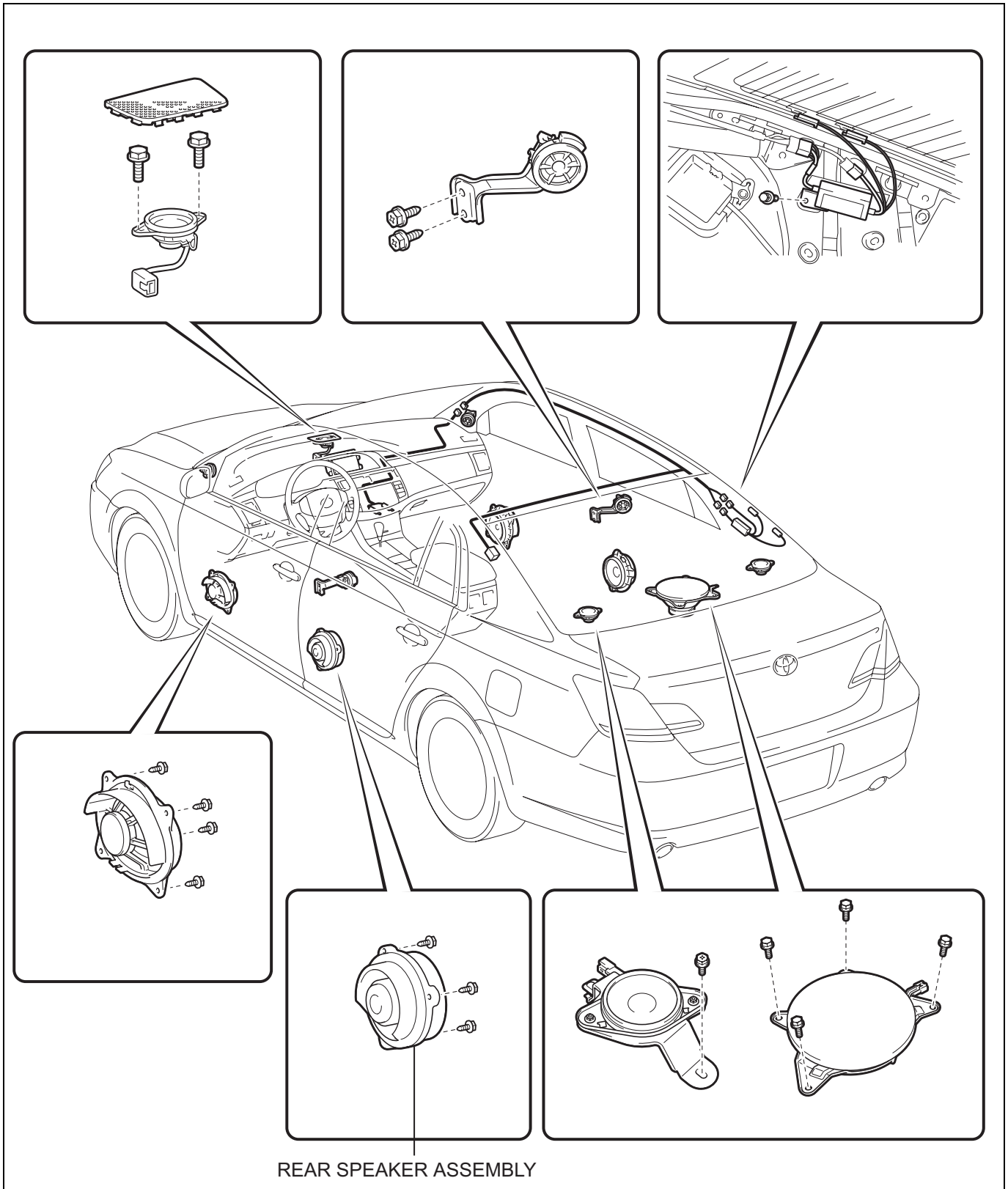

AV

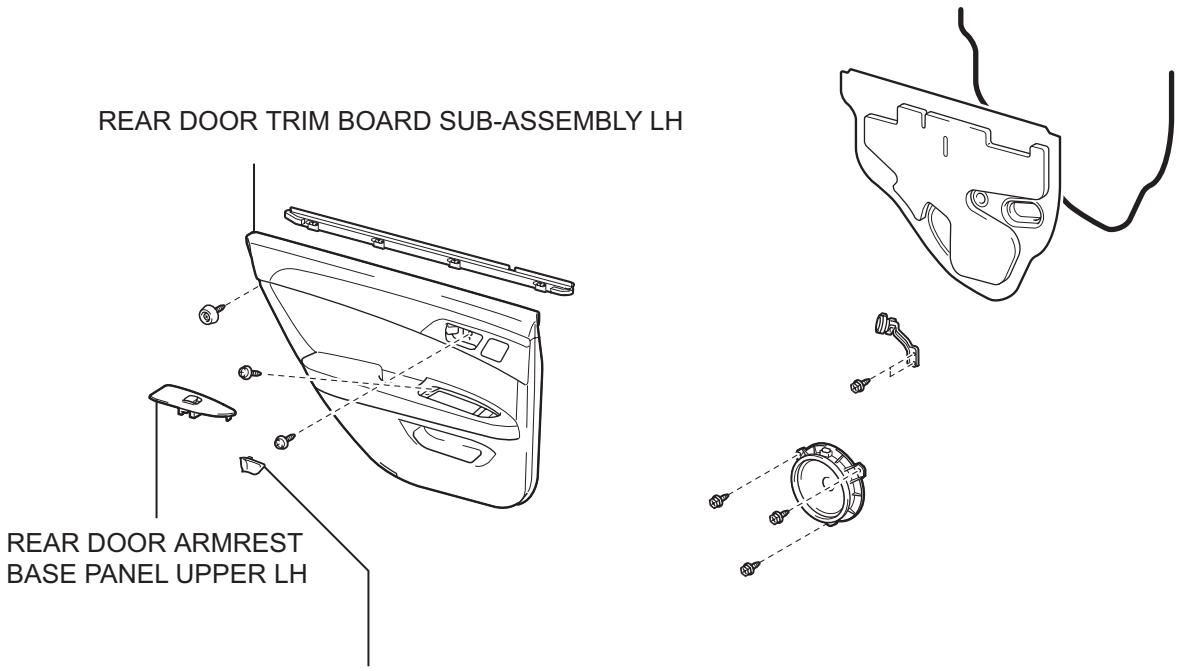

P

B115038E03

ON-VEHICLE INSPECTION

1. INSPECT REAR SPEAKER

HINT:

Remove interior parts so that the rear speaker can be seen.

(a) Check the speaker installation.

OK:

The speaker is securely installed.

If the result is not as specified, reinstall the rear speaker.

(b) Visually check the speaker.

OK:

The cone paper of the speaker is not torn.

If the result is not as specified, replace the rear speaker.

(c) Speaker resistance check

(1) Disconnect the rear speaker connector.

(2) Measure the resistance between the terminals of the speaker.

Standard resistance:

9 Speaker System: 3.2 to 4.8 Ω

12 Speaker System: 1.8 to 2.6 Ω

If the result is not as specified, replace the rear speaker.

REMOVAL

HINT:

- Use the same procedures for the RH side and LH side.
- The procedures listed below are for the LH side.

1. **REMOVE REAR DOOR INSIDE HANDLE BEZEL PLUG LH (See page ED-18)**
2. **REMOVE REAR DOOR ARMREST BASE PANEL UPPER LH (See page ED-18)**
3. **REMOVE REAR DOOR TRIM BOARD SUB-ASSEMBLY LH (See page ED-18)**
4. **REMOVE REAR SPEAKER ASSEMBLY**
   (a) Disconnect the connector.
   (b) Remove the 3 screws and rear speaker assembly.

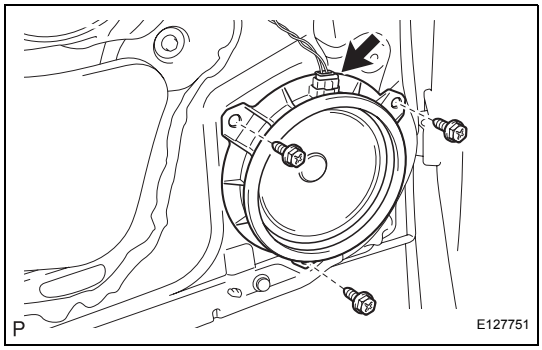

INSTALLATION

1. **INSTALL REAR SPEAKER ASSEMBLY**
2. **INSTALL REAR DOOR TRIM BOARD SUB-ASSEMBLY LH**
3. **INSTALL REAR DOOR ARMREST BASE PANEL UPPER LH**
4. **INSTALL REAR DOOR INSIDE HANDLE BEZEL PLUG LH**

ON-VEHICLE INSPECTION

1. INSPECT REAR SPEAKER

HINT:

Remove interior parts so that the rear speaker can be seen.

(a) Check the speaker installation.

OK:

The speaker is securely installed.

If the result is not as specified, reinstall the rear speaker.

(b) Visually check the speaker.

OK:

The cone paper of the speaker is not torn.

If the result is not as specified, replace the rear speaker.

(c) Speaker resistance check

(1) Disconnect the rear speaker connector.

(2) Measure the resistance between the terminals of the speaker.

Standard resistance:

9 Speaker System: 3.2 to 4.8 Ω

12 Speaker System: 1.8 to 2.6 Ω

If the result is not as specified, replace the rear speaker.

REMOVAL

HINT:

- Use the same procedures for the RH side and LH side.
- The procedures listed below are for the LH side.

1. **REMOVE REAR DOOR INSIDE HANDLE BEZEL PLUG LH (See page ED-18)**
2. **REMOVE REAR DOOR ARMREST BASE PANEL UPPER LH (See page ED-18)**
3. **REMOVE REAR DOOR TRIM BOARD SUB-ASSEMBLY LH (See page ED-18)**
4. **REMOVE REAR SPEAKER ASSEMBLY**
   (a) Disconnect the connector.
   (b) Remove the 3 screws and rear speaker assembly.

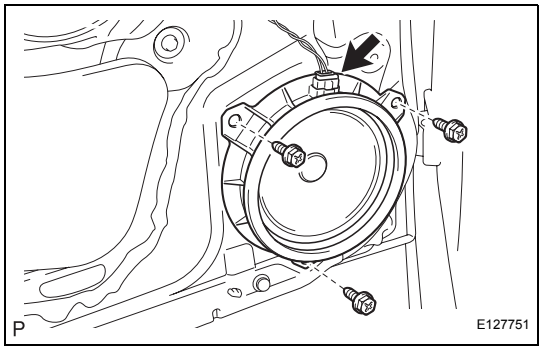

INSTALLATION

1. **INSTALL REAR SPEAKER ASSEMBLY**
2. **INSTALL REAR DOOR TRIM BOARD SUB-ASSEMBLY LH**
3. **INSTALL REAR DOOR ARMREST BASE PANEL UPPER LH**
4. **INSTALL REAR DOOR INSIDE HANDLE BEZEL PLUG LH**

REAR NO. 2 SPEAKER

COMPONENTS

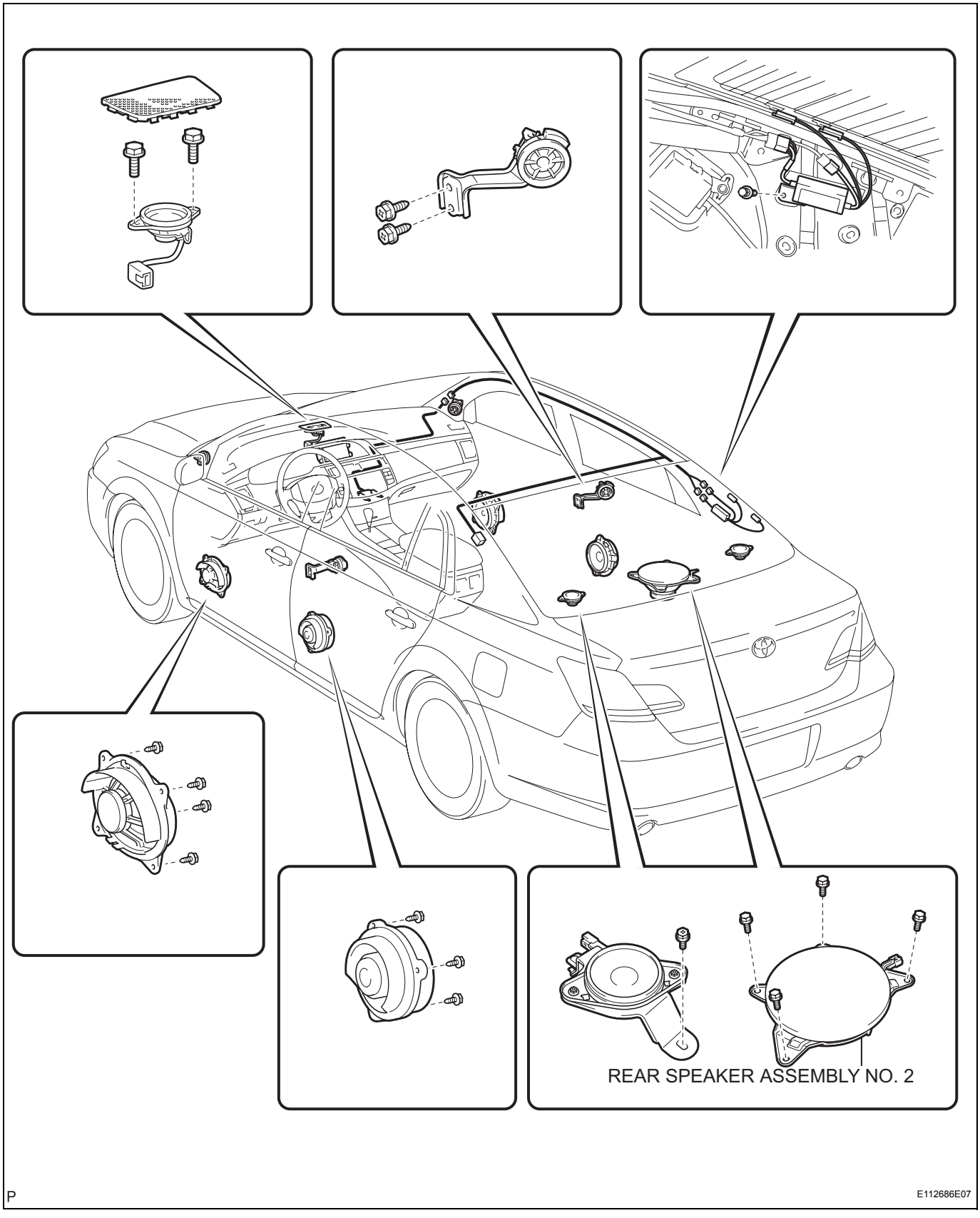

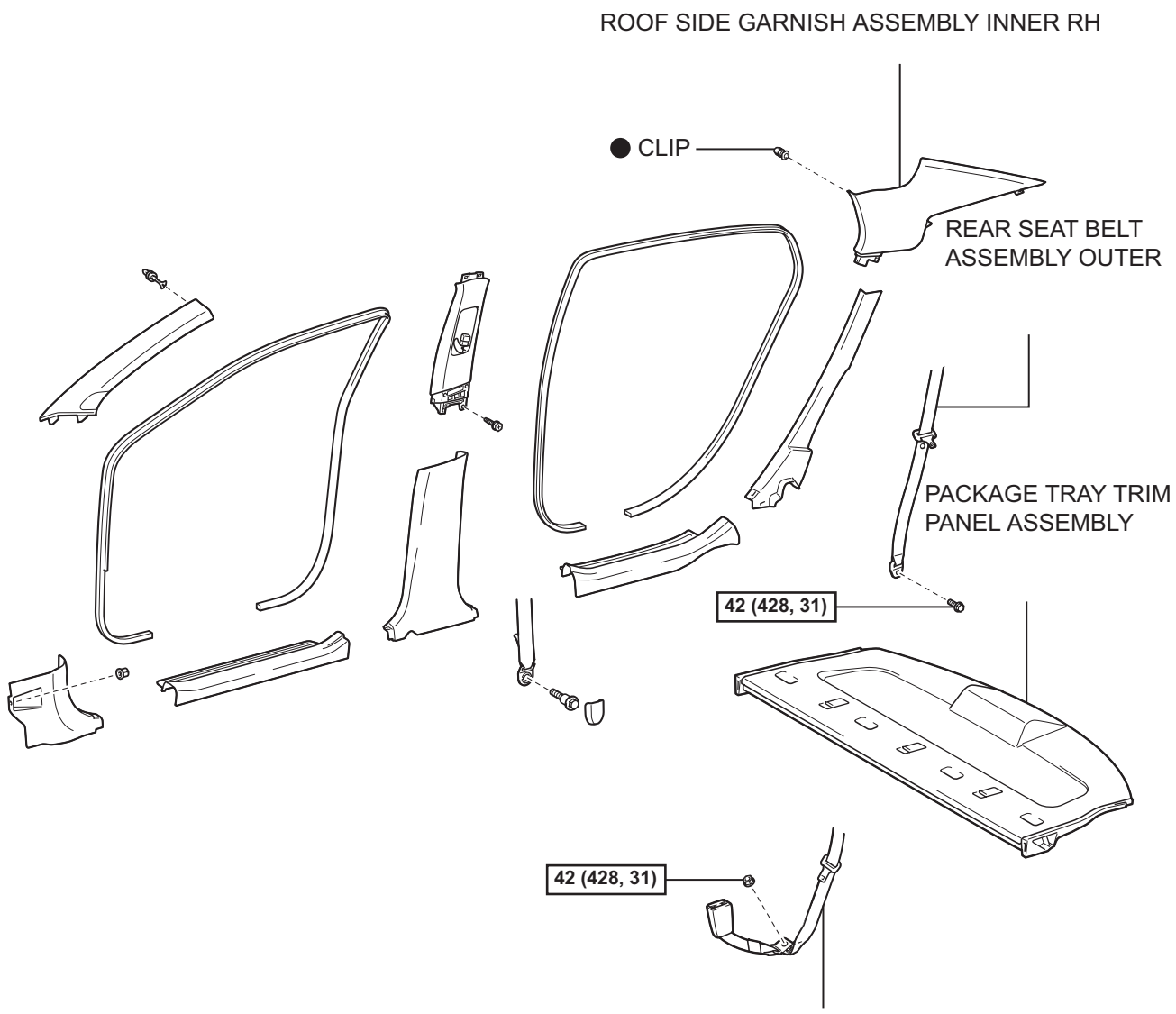

N*m (kgf*cm, ft.*lbf) : Specified torque

● Non-reusable part

P

B115060E08

AV

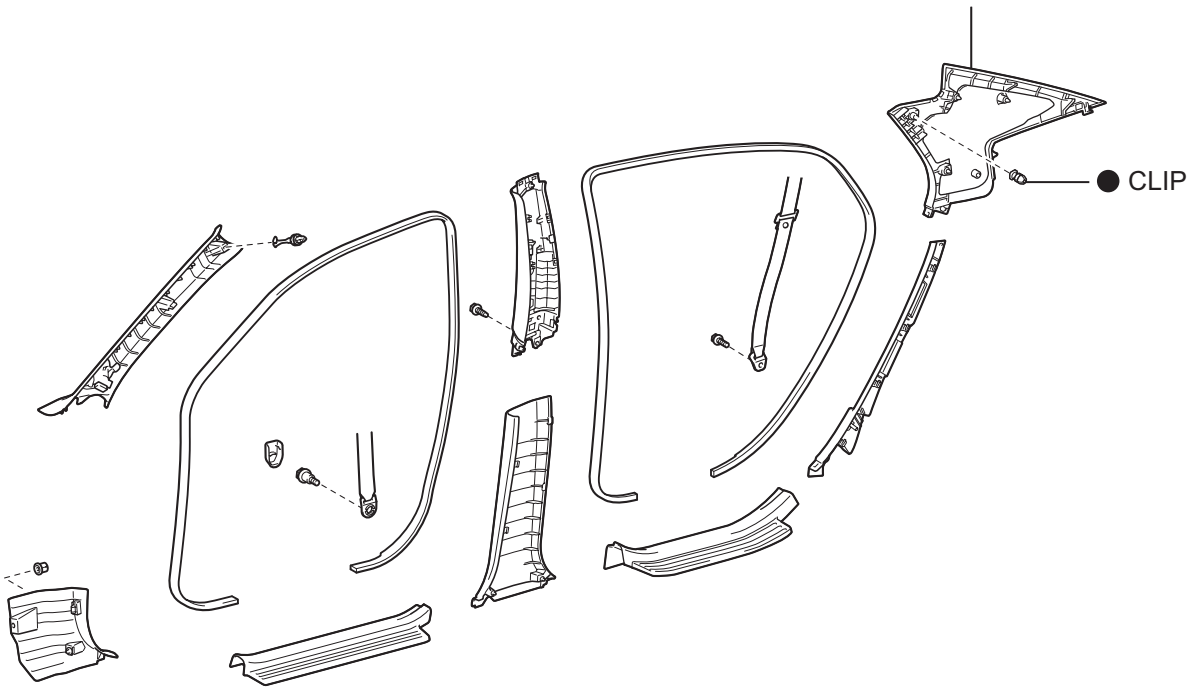

● Non-reusable part

P

B115045E08

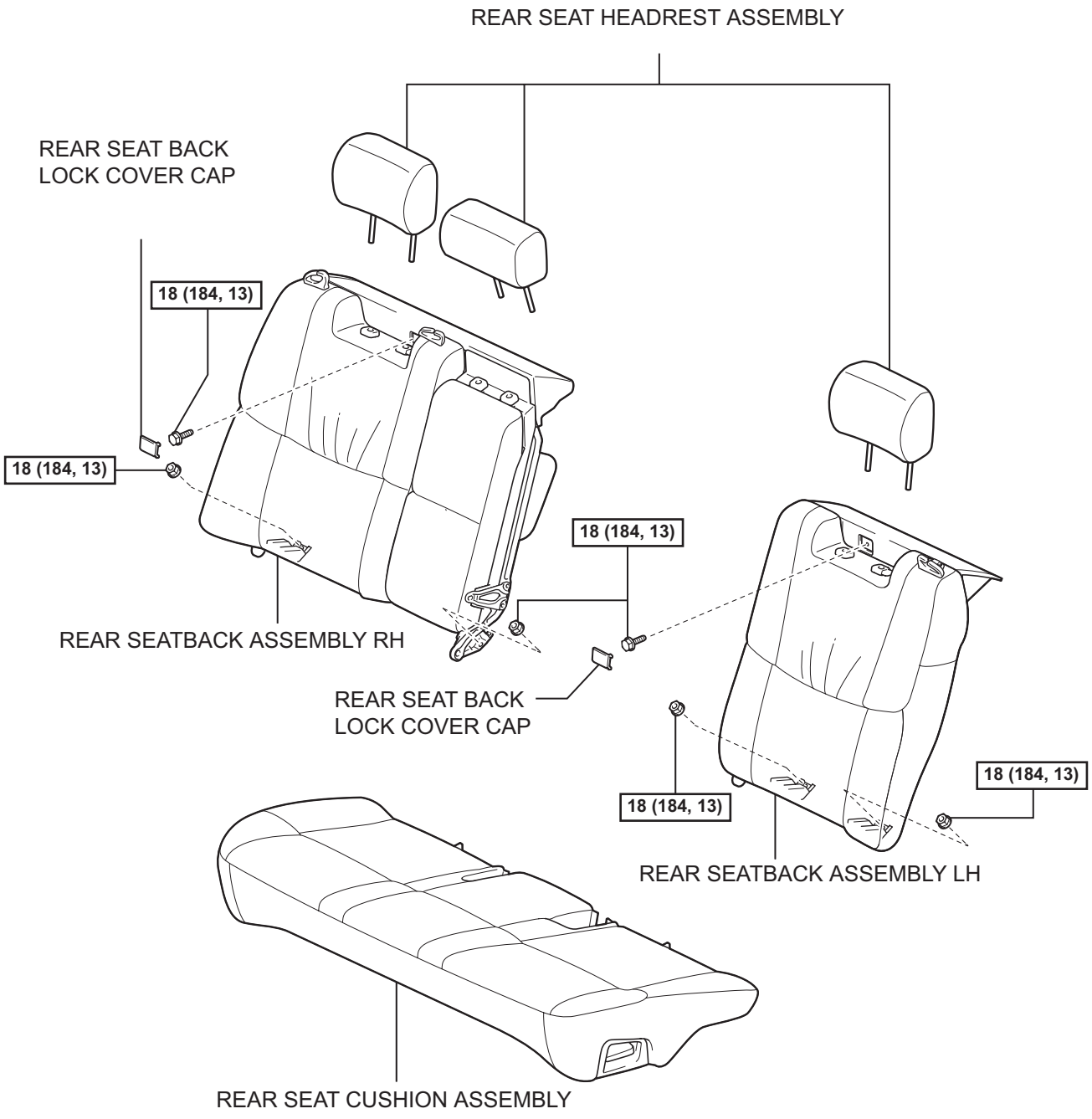

N*m (kgf*cm, ft.*lbf) : Specified torque

P

B115034E15

AV

ON-VEHICLE INSPECTION

1. INSPECT REAR NO. 2 SPEAKER

HINT:

Remove interior parts so that the rear No. 2 speaker can be seen.

(a) Check the speaker installation.

OK:

The speaker is securely installed.

If the result is not as specified, reinstall the rear No. 2 speaker.

(b) Visually check the speaker.

OK:

The cone paper of the speaker is not torn.

If the result is not as specified, replace the rear No. 2 speaker.

(c) Speaker resistance check

(1) Disconnect the rear No. 2 speaker connector.

(2) Measure the resistance between the terminals of the speaker.

Standard resistance:

1.8 to 2.6 Ω

If the result is not as specified, replace the rear No. 2 speaker.

REMOVAL

1. REMOVE REAR SEAT CUSHION ASSEMBLY (See page SE-68)
2. REMOVE REAR SEAT HEADREST ASSEMBLY
3. REMOVE REAR SEAT BACK LOCK COVER CAP (See page SE-68)
4. REMOVE REAR SEATBACK ASSEMBLY LH (See page SE-68)
5. REMOVE REAR SEATBACK ASSEMBLY RH (See page SE-69)
6. REMOVE ROOF SIDE GARNISH ASSEMBLY INNER LH (See page IR-14)
7. REMOVE ROOF SIDE GARNISH ASSEMBLY INNER RH (See page IR-14)
8. SEPARATE REAR SEAT BELT ASSEMBLY OUTER (See page SB-25)
9. SEPARATE REAR SEAT INNER WITH CENTER BELT ASSEMBLY RH (See page SB-33)
10. SEPARATE REAR SEAT INNER WITH CENTER BELT ASSEMBLY LH (See page SB-33)
11. REMOVE PACKAGE TRAY TRIM PANEL ASSEMBLY (See page SB-31)
12. REMOVE REAR SPEAKER ASSEMBLY NO. 2
    (a) Disconnect the connector.
    (b) Remove the 4 bolts and rear speaker assembly No. 2.

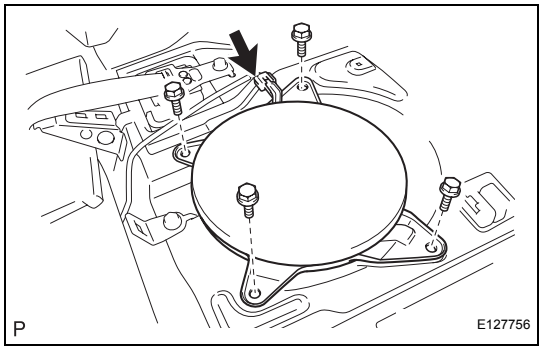

INSTALLATION

1. INSTALL REAR SPEAKER ASSEMBLY NO. 2
2. INSTALL REAR SEAT BELT ASSEMBLY OUTER (See page SB-25)
3. INSTALL REAR SEAT INNER WITH CENTER BELT ASSEMBLY RH (See page SB-33)
4. INSTALL REAR SEAT BELT ASSEMBLY OUTER (See page SB-25)
5. INSTALL ROOF SIDE GARNISH ASSEMBLY INNER RH (See page IR-19)
6. INSTALL ROOF SIDE GARNISH ASSEMBLY INNER LH (See page IR-19)
7. INSTALL REAR SEATBACK ASSEMBLY RH (See page SE-76)
8. INSTALL REAR SEATBACK ASSEMBLY LH (See page SE-77)
9. INSTALL REAR SEAT CUSHION ASSEMBLY

ON-VEHICLE INSPECTION

1. INSPECT ROOF SPEAKER

HINT:

Remove interior parts so that the roof speaker can be seen.

(a) Check the speaker installation.

OK:

The speaker is securely installed.

If the result is not as specified, reinstall the roof speaker.

(b) Visually check the speaker.

OK:

The cone paper of the speaker is not torn.

If the result is not as specified, replace the roof speaker.

(c) Speaker resistance check

(1) Disconnect the roof speaker connector.

(2) Measure the resistance between the terminals of the speaker.

Standard resistance:

1.5 to 2.1 Ω

If the result is not as specified, replace the roof speaker.

REMOVAL

HINT:
- Use the procedures for the RH side and LH side.
- The procedures listed below are for the LH side.

1. **REMOVE REAR SEAT CUSHION ASSEMBLY (See page SE-68)**
2. **REMOVE REAR SEAT HEADREST ASSEMBLY**
3. **REMOVE REAR SEAT BACK LOCK COVER CAP (See page SE-68)**
4. **REMOVE REAR SEATBACK ASSEMBLY LH (See page SE-68)**
5. **REMOVE REAR SEATBACK ASSEMBLY RH (See page SE-69)**
6. **REMOVE ROOF SIDE GARNISH ASSEMBLY INNER LH (See page IR-14)**
7. **REMOVE ROOF SIDE GARNISH ASSEMBLY INNER RH (See page IR-14)**
8. **SEPARATE REAR SEAT BELT ASSEMBLY OUTER (See page SB-25)**
9. **SEPARATE REAR SEAT INNER WITH CENTER BELT ASSEMBLY RH (See page SB-33)**
10. **SEPARATE REAR SEAT INNER WITH CENTER BELT ASSEMBLY LH (See page SB-33)**
11. **REMOVE PACKAGE TRAY TRIM PANEL ASSEMBLY (See page SB-31)**
12. **REMOVE ROOF SPEAKER ASSEMBLY**
    (a) Disconnect the connector.
    (b) Remove the bolt and roof speaker assembly as shown in the illustration.

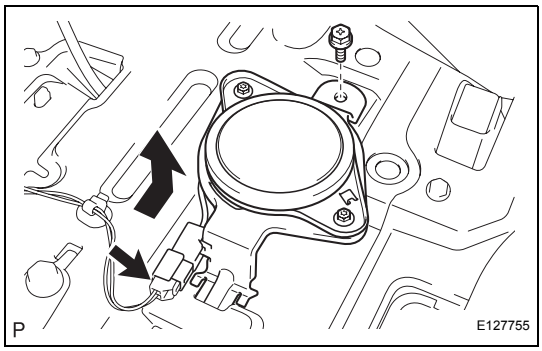

INSTALLATION

1. INSTALL ROOF SPEAKER ASSEMBLY
2. INSTALL REAR SEAT BELT ASSEMBLY OUTER (See page SB-25)
3. INSTALL REAR SEAT INNER WITH CENTER BELT ASSEMBLY RH (See page SB-33)
4. INSTALL REAR SEAT BELT ASSEMBLY OUTER (See page SB-25)
5. INSTALL ROOF SIDE GARNISH ASSEMBLY INNER RH (See page IR-19)
6. INSTALL ROOF SIDE GARNISH ASSEMBLY INNER LH (See page IR-19)
7. INSTALL REAR SEATBACK ASSEMBLY RH (See page SE-76)
8. INSTALL REAR SEATBACK ASSEMBLY LH (See page SE-77)
9. INSTALL REAR SEAT CUSHION ASSEMBLY

TAPE PLAYER

COMPONENTS

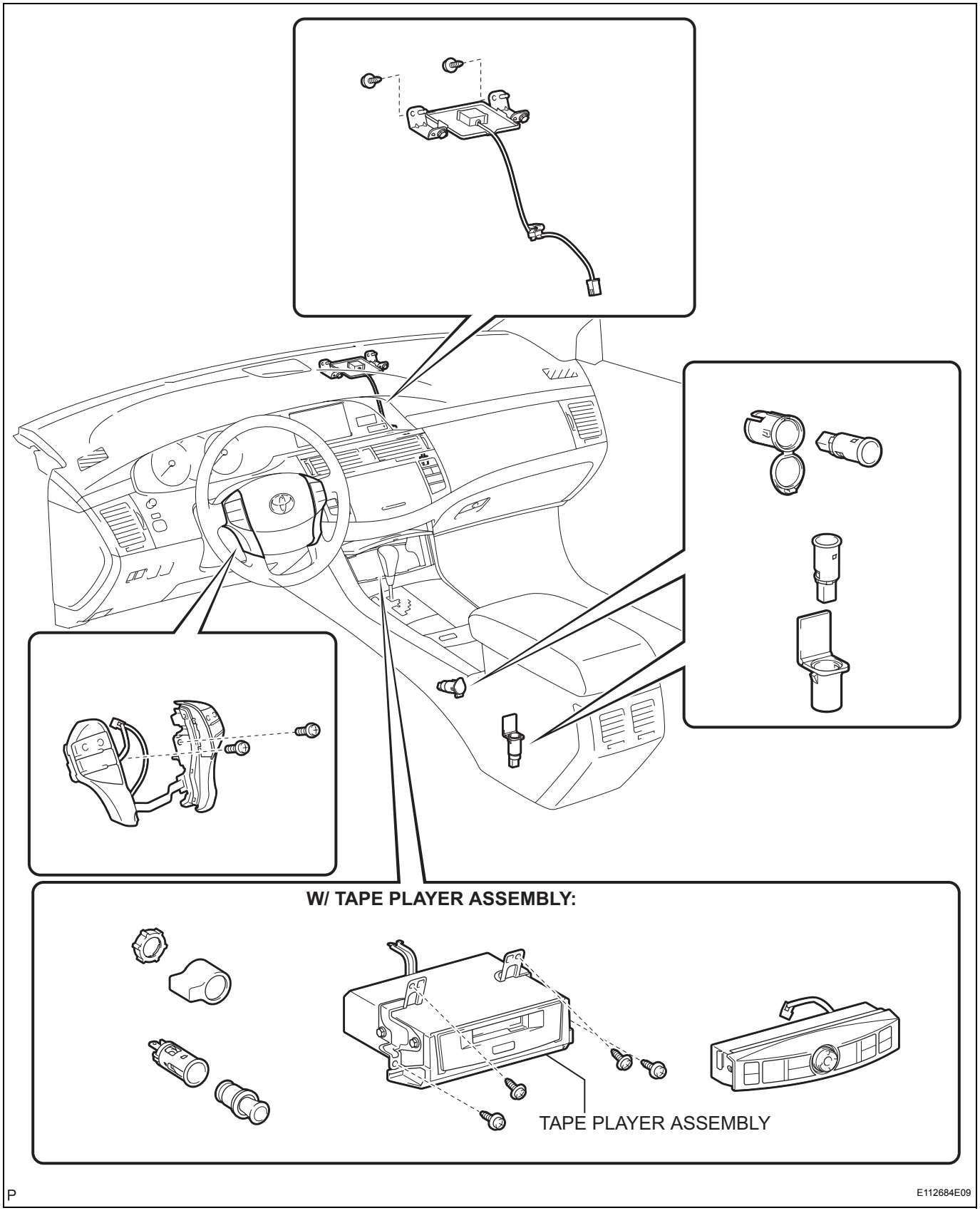

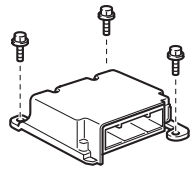



CONSOLE PANEL SUB-ASSEMBLY UPPER

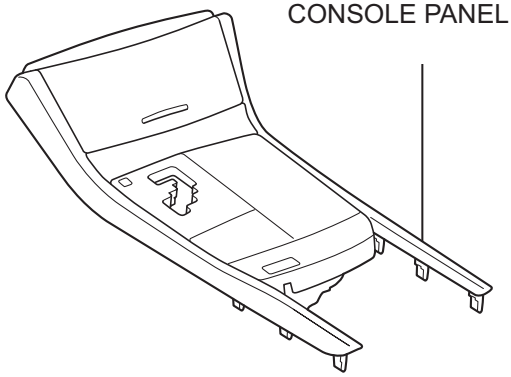

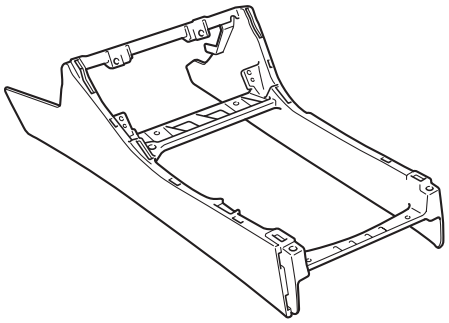

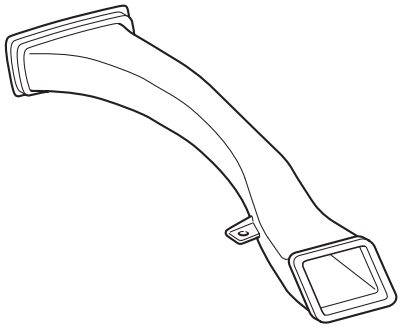

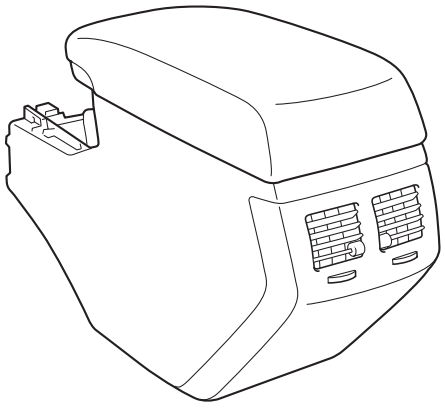

C

C114925E02

REMOVAL

1. **REMOVE CONSOLE PANEL SUB-ASSEMBLY UPPER (See page IP-13)**

2. **REMOVE TAPE PLAYER ASSEMBLY**
   (a) Remove the 4 screws.
   (b) Pull the tape player assembly toward you and disengage tape player guide.
   (c) Disconnect all connectors and remove the tape player assembly.

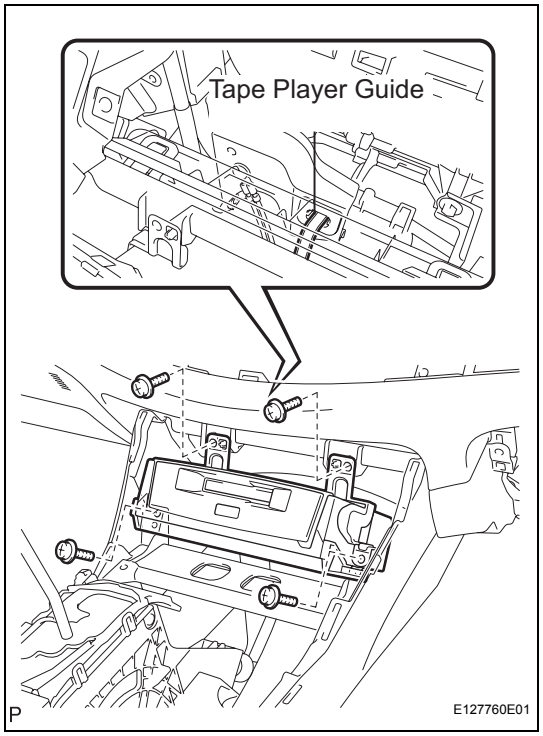

INSTALLATION

1. **INSTALL TAPE PLAYER ASSEMBLY**
   (a) Connect all connectors.
   (b) Install the tape player assembly with the 4 screws and tape player guide.

2. **INSTALL CONSOLE PANEL SUB-ASSEMBLY UPPER**

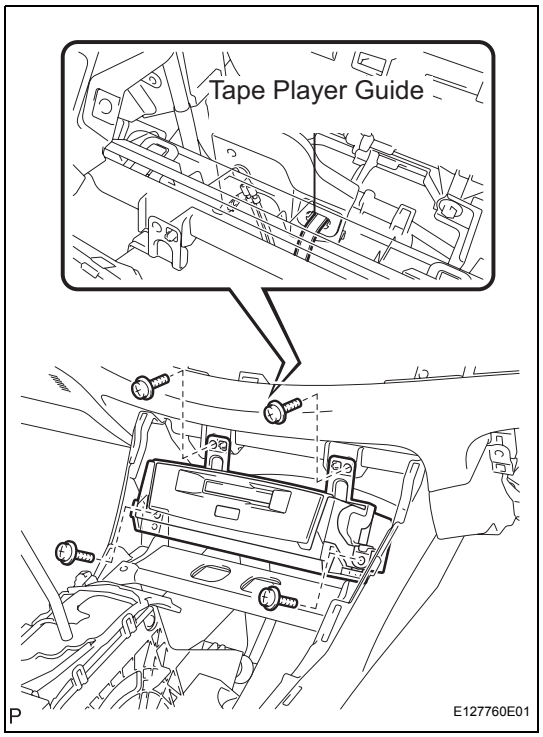

RADIO ANTENNA CORD

COMPONENTS

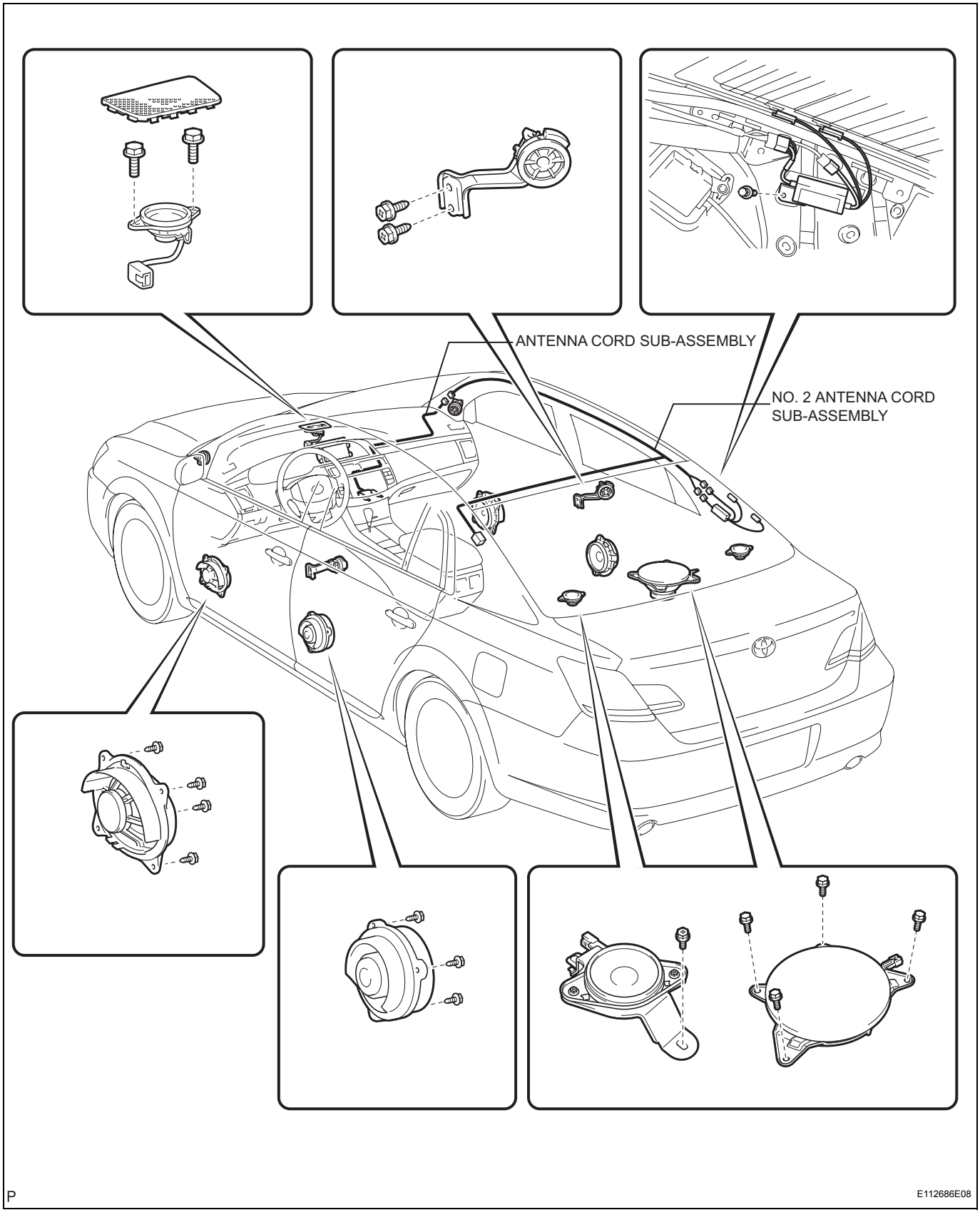

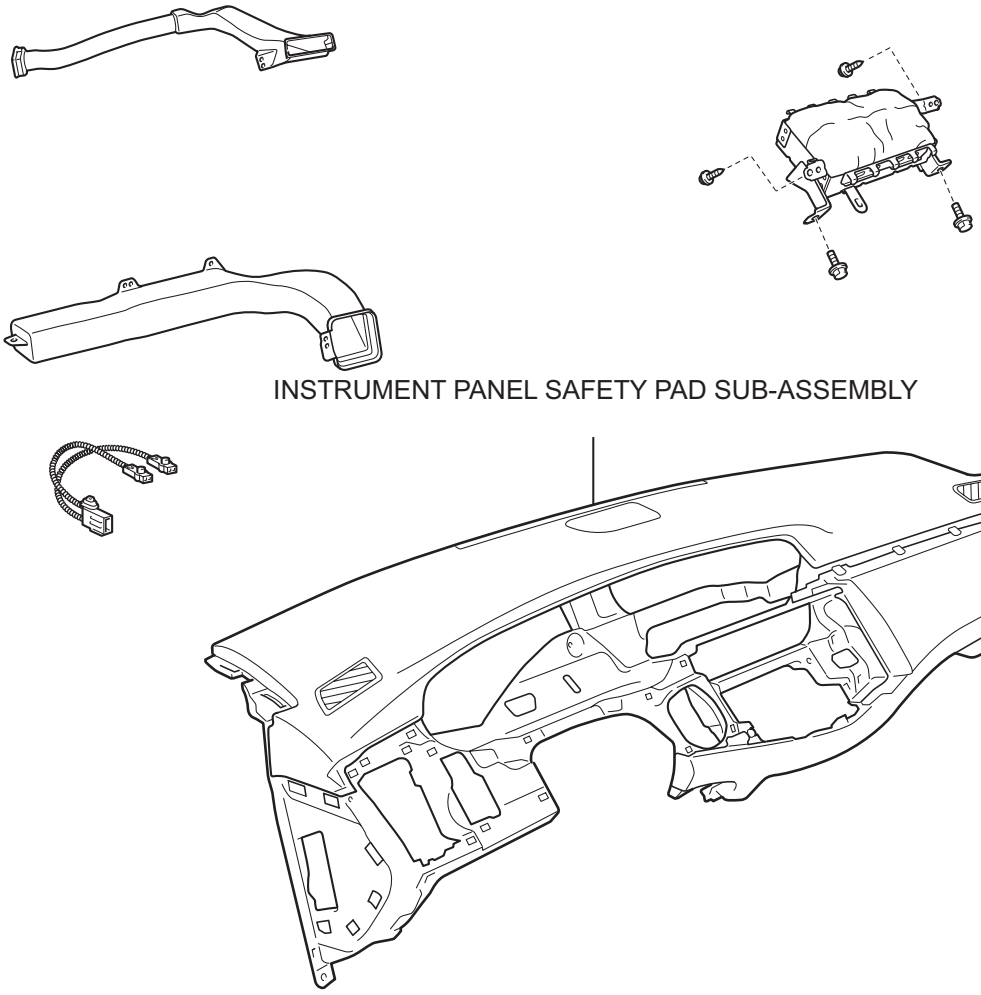

C

C114922E03

AV

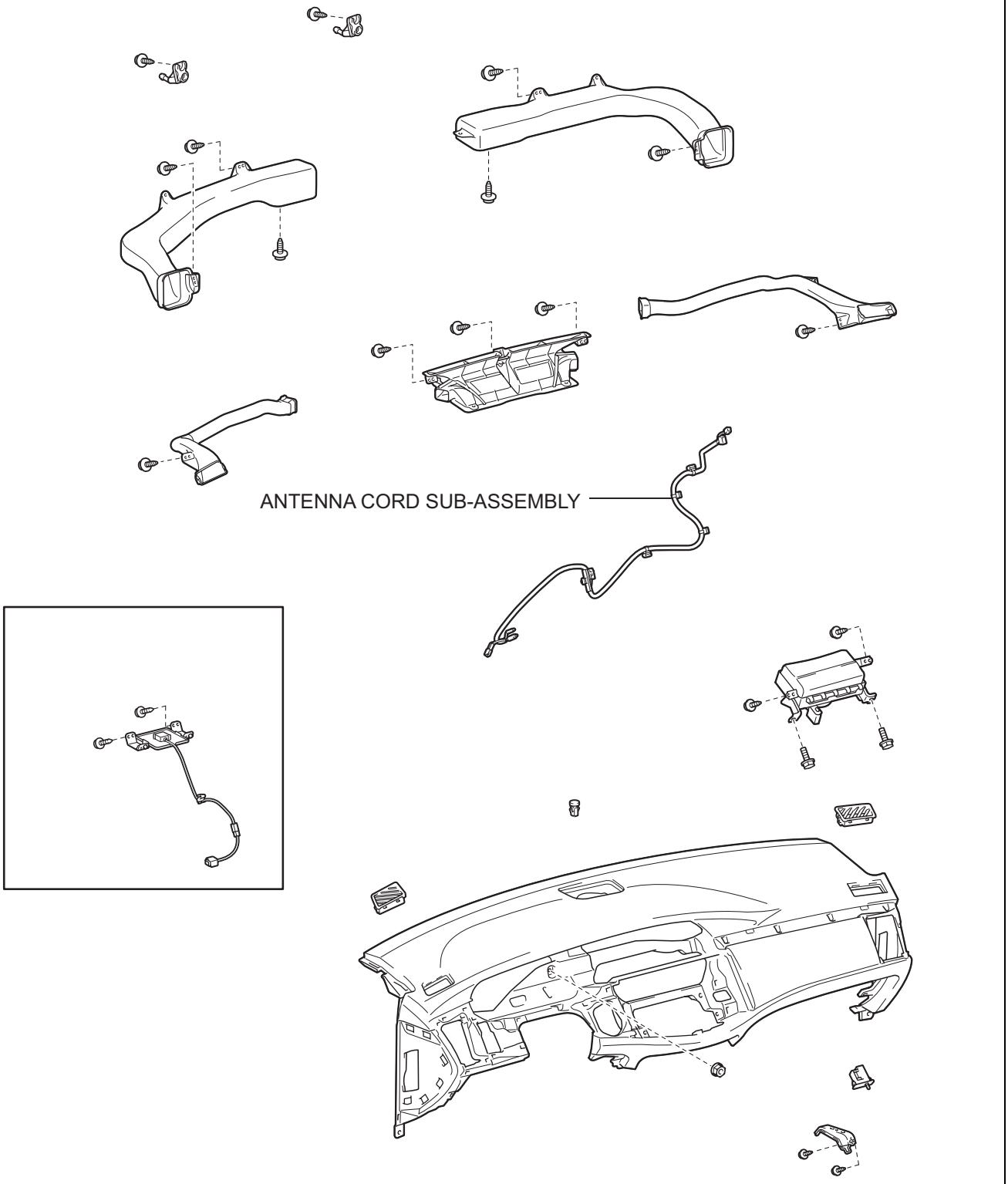

P

B115009E02

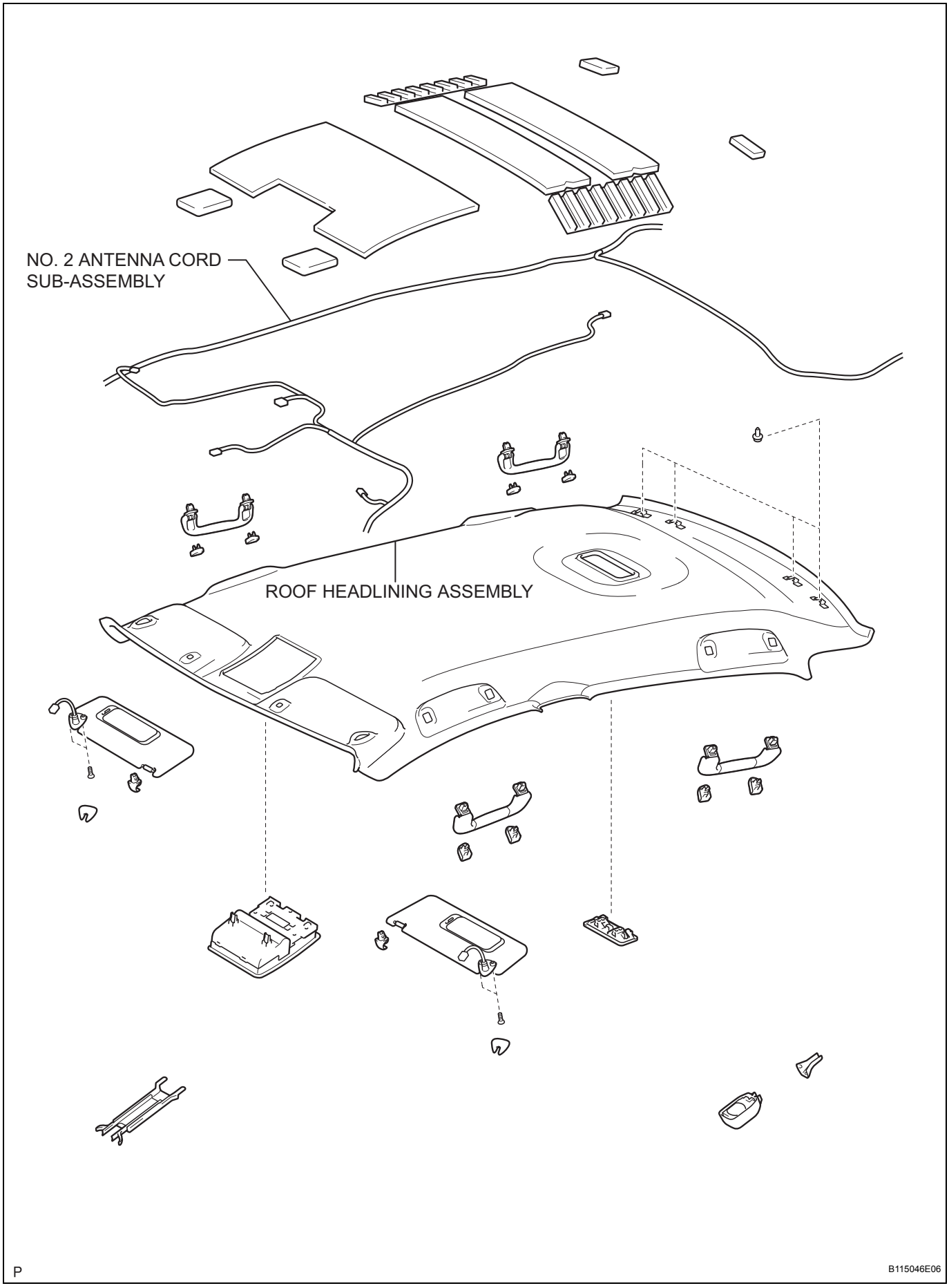
NO. 2 ANTENNA CORD SUB-ASSEMBLY
ROOF HEADLINING ASSEMBLY
P
B115046E06

REMOVAL

1. **TABLE OF BOLT, SCREW AND NUT (See page IP-8)**
2. **DISCONNECT CABLE FROM NEGATIVE BATTERY TERMINAL (See page IP-8)**
3. **REMOVE INSTRUMENT PANEL SAFETY PAD SUB-ASSEMBLY (w/ Front Passenger Airbag)**
   HINT:
   Refer to the procedures up to the removal of the instrument panel safety pad sub-assembly (w/ front passenger airbag) (See page IP-8).

4. **REMOVE ANTENNA CORD SUB-ASSEMBLY**
   (a) Remove the 5 clamps and antenna cord sub-assembly.

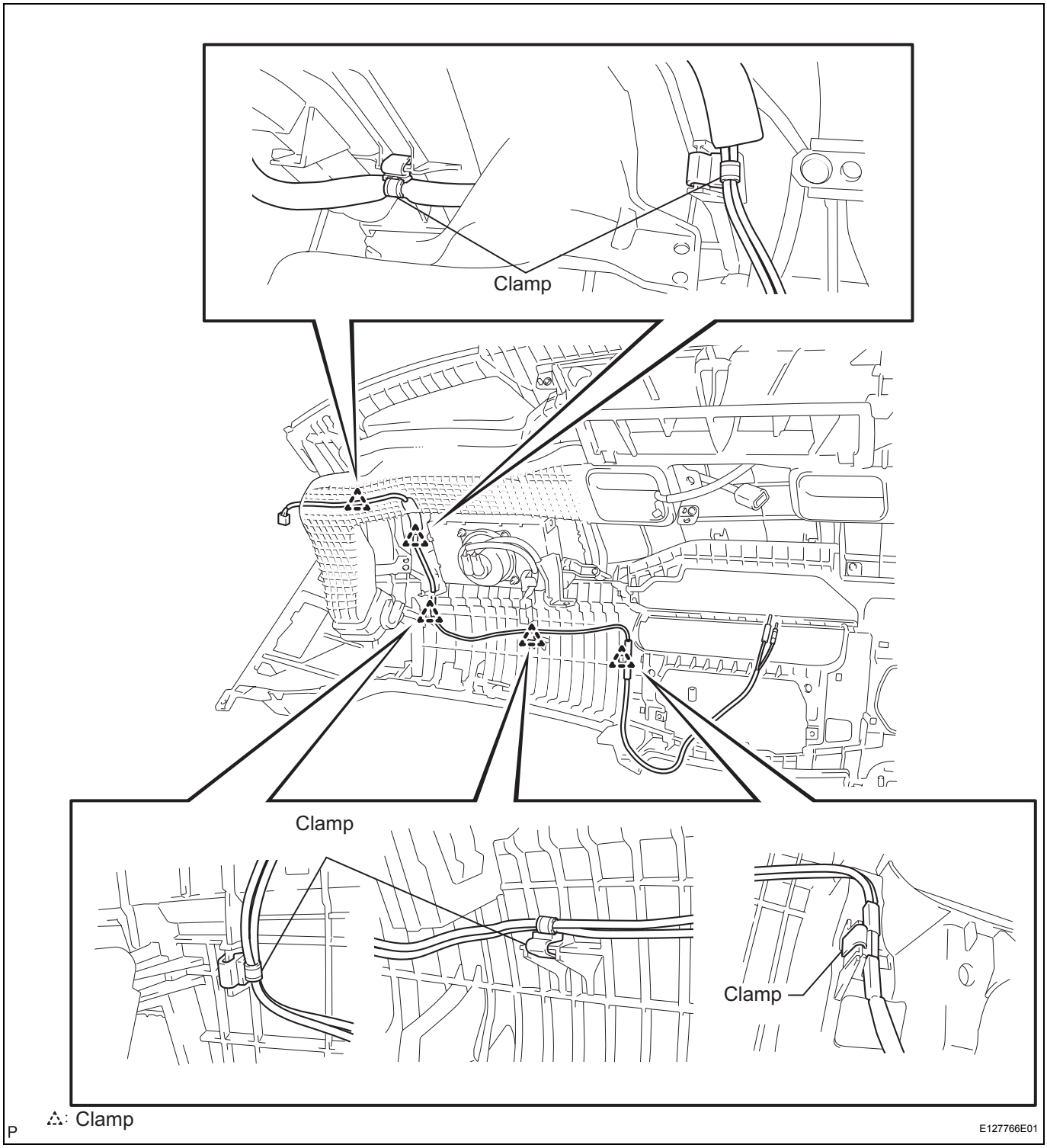

5. **REMOVE ROOF HEADLINING ASSEMBLY**
   HINT:
   Refer to the procedures up to the removal of the roof headlining assembly (See page IR-11).

6. **REMOVE NO. 2 ANTENNA CORD SUB-ASSEMBLY**
   (a) Remove No. 2 antenna cord sub-assembly.

No. 2 Antenna Cord Sub-assembly

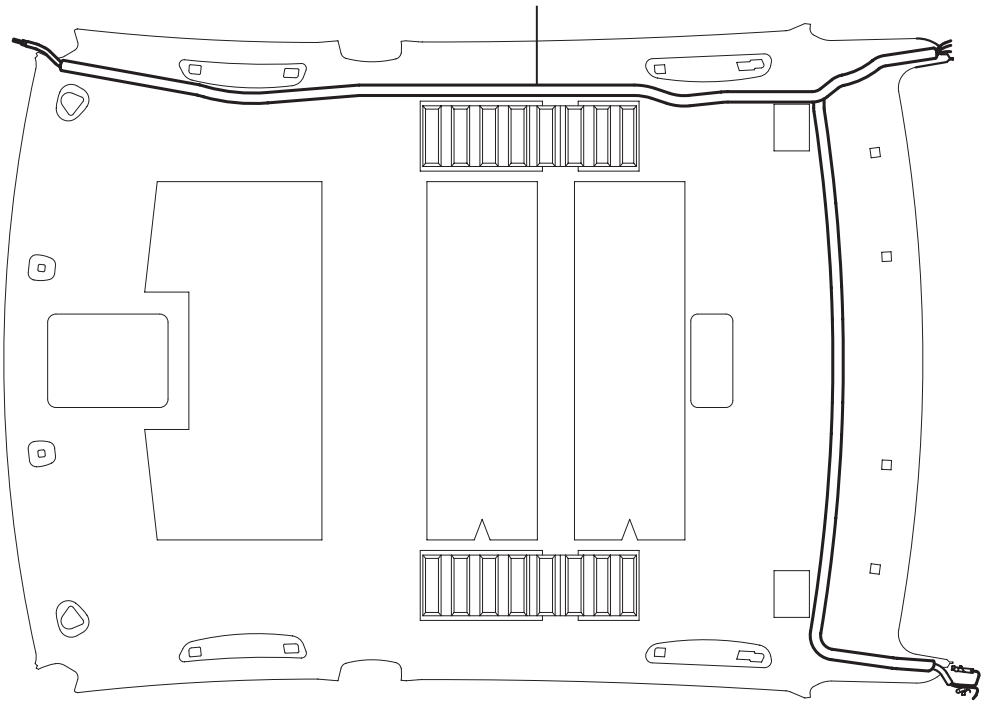

P

E127767E01

AV

INSTALLATION

1. **INSTALL NO. 2 ANTENNA CORD SUB-ASSEMBLY**
   (a) Install the No. 2 antenna cord sub-assembly with the hot glue as shown in the illustration.

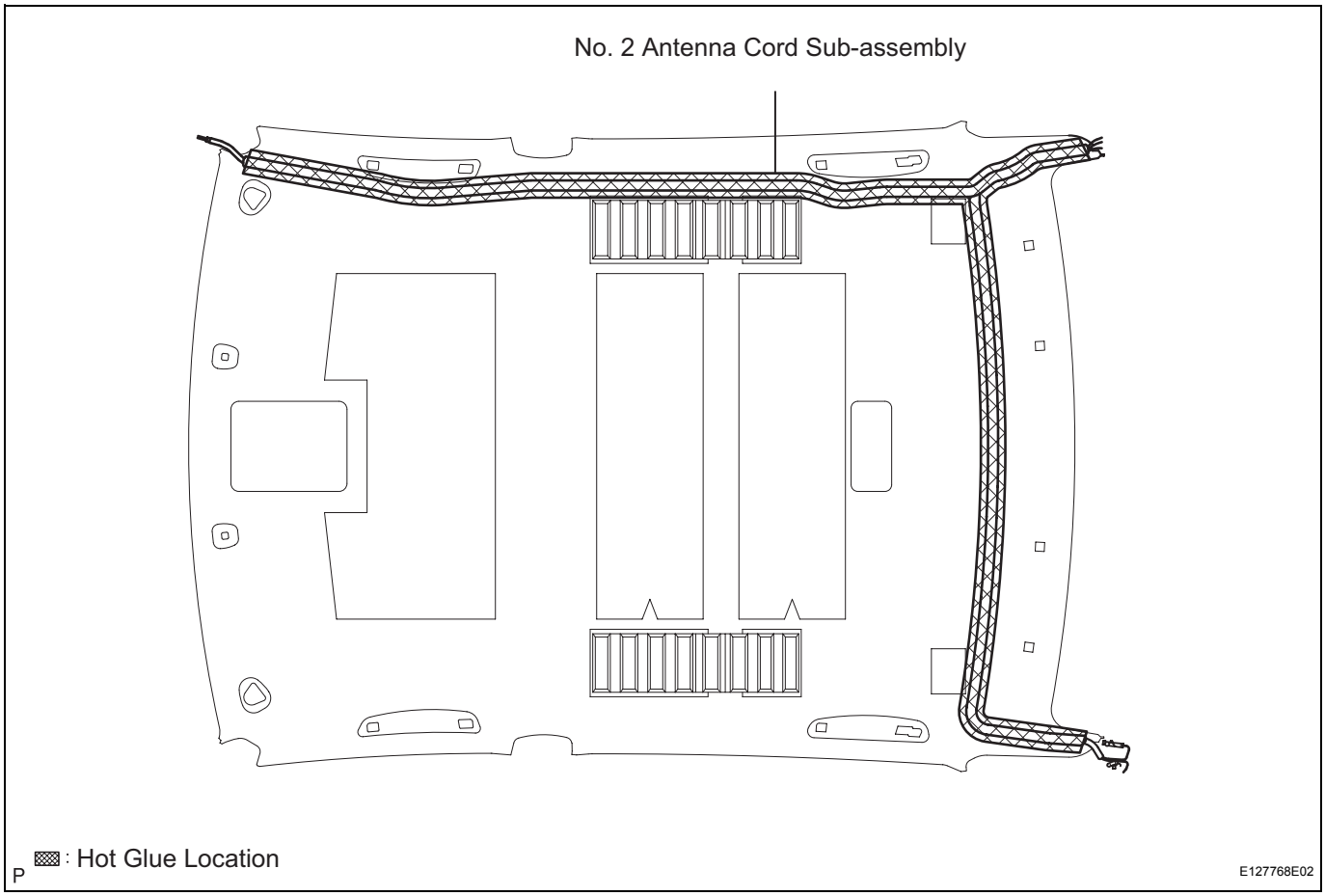

2. **INSTALL ROOF HEADLINING ASSEMBLY**
   HINT:
   Refer to the installation procedures of the roof headlining assembly (See page IR-19).
3. **INSTALL INSTRUMENT PANEL SAFETY PAD SUB-ASSEMBLY (w/ Front Passenger Airbag) (See page IP-17)**
4. **CENTER SPIRAL CABLE (See page RS-316)**
5. **INSTALL STEERING WHEEL ASSEMBLY (See page SR-46)**
6. **INSTALL STEERING PAD (See page RS-305)**
7. **CONNECT CABLE TO NEGATIVE BATTERY TERMINAL**
8. **PERFORM SYSTEM INITIALIZE (See page RS-306)**
9. **INSPECT STEERING PAD (See page RS-305)**
10. **INSPECT SRS WARNING LIGHT (See page RS-306)**

AMPLIFIER ANTENNA

COMPONENTS

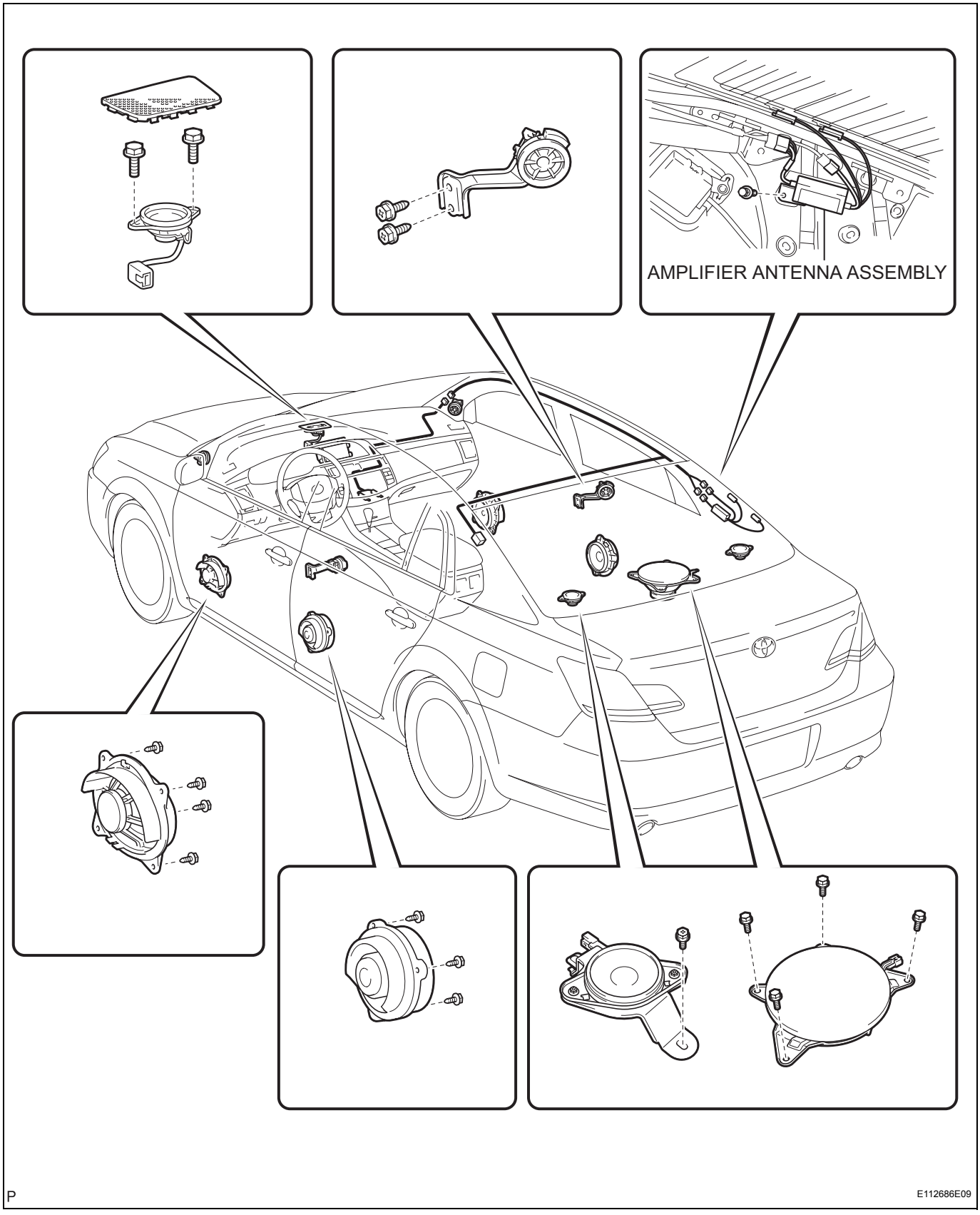

AV

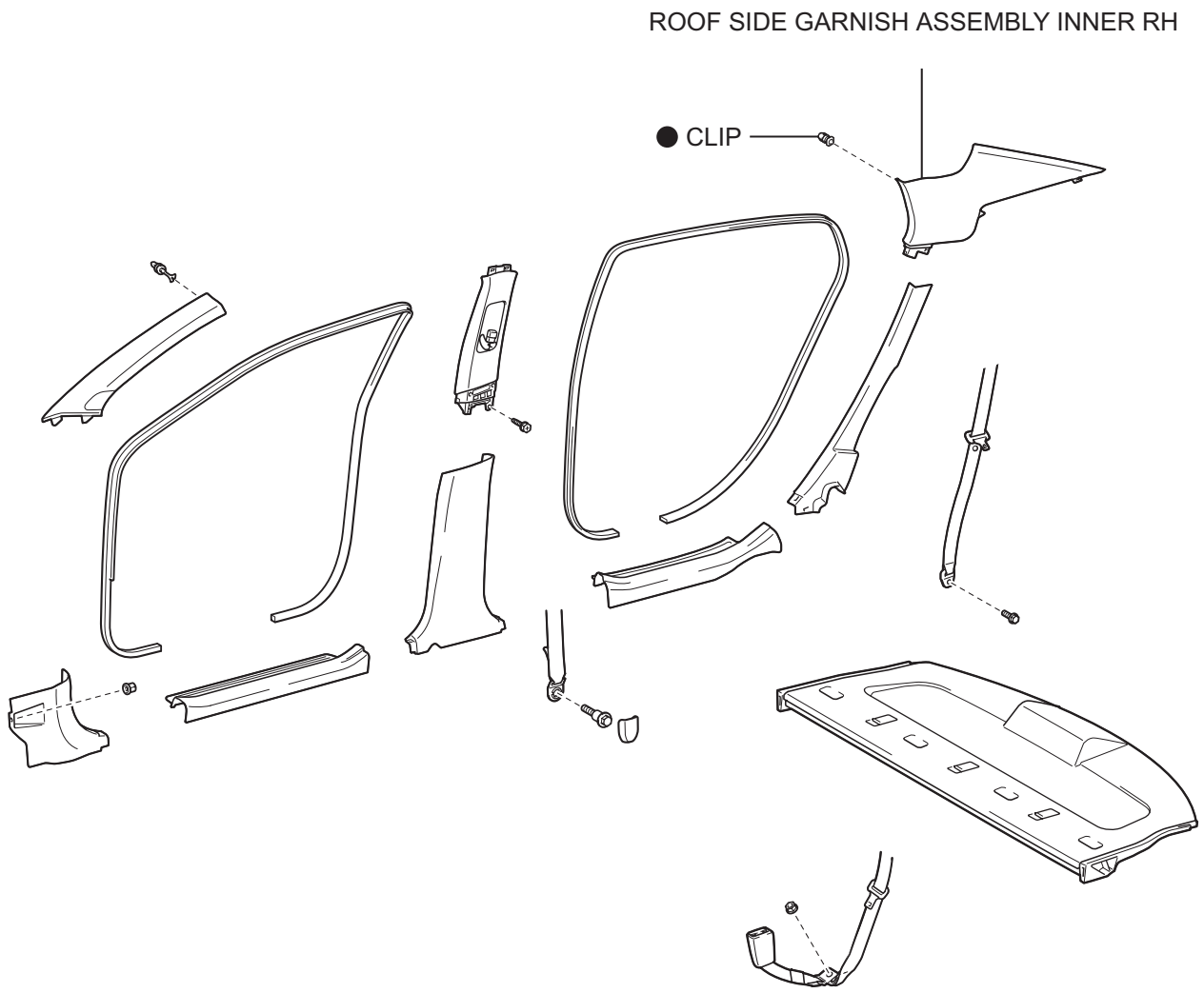

● Non-reusable part

P

B115060E09

REMOVAL

1. **REMOVE ROOF SIDE GARNISH ASSEMBLY INNER RH (See page IR-14)**

2. **REMOVE AMPLIFIER ANTENNA ASSEMBLY**
   (a) Disconnect all connectors.
   (b) Remove the bolt and the amplifier antenna assembly.

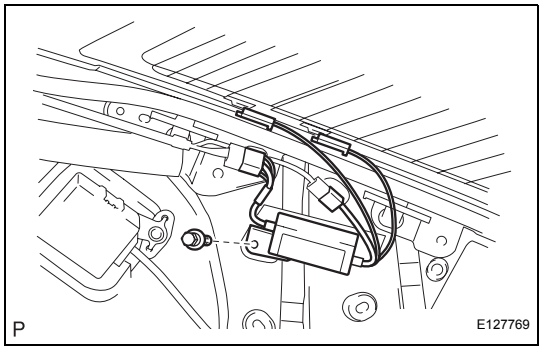

INSTALLATION

1. **INSTALL AMPLIFIER ANTENNA ASSEMBLY**
2. **INSTALL ROOF SIDE GARNISH ASSEMBLY INNER RH (See page IR-19)**

NETWORK GATEWAY ECU

COMPONENTS

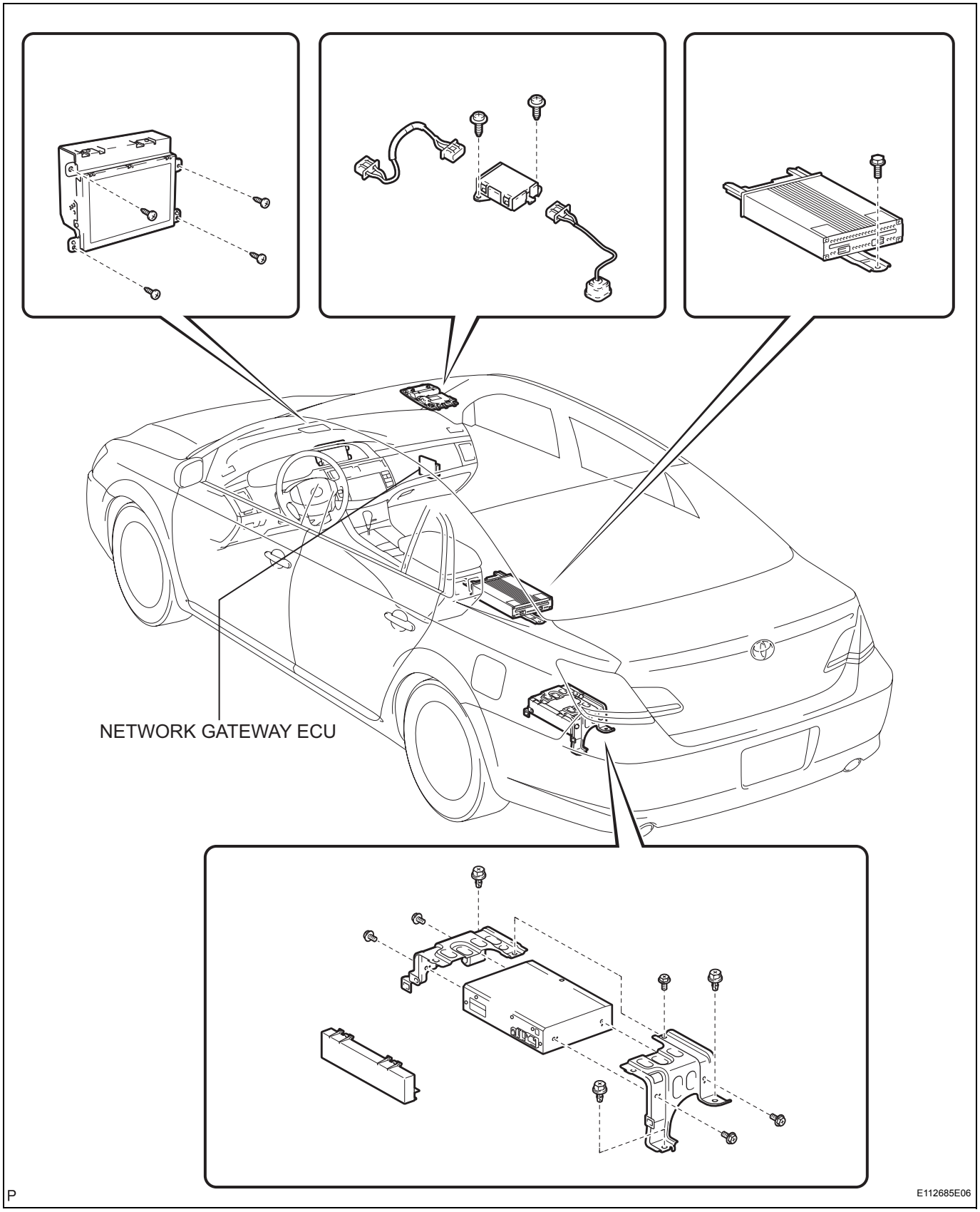

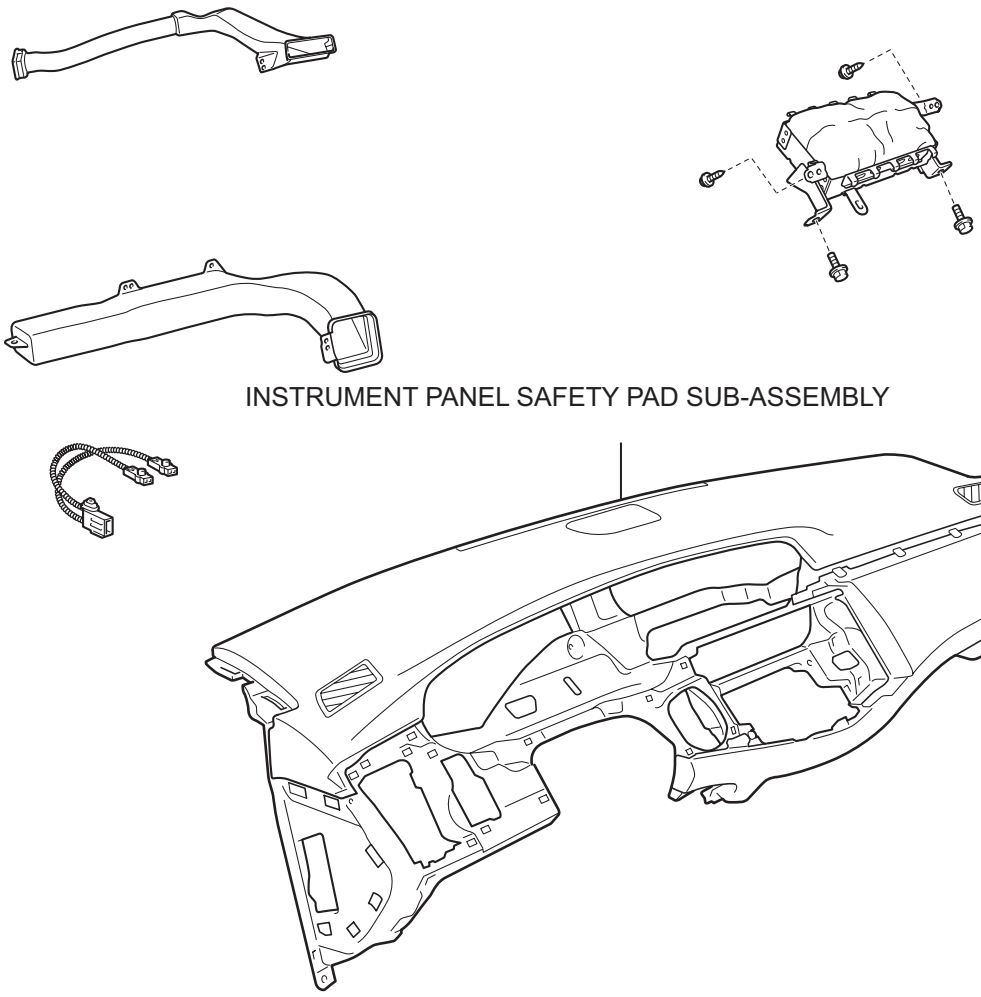

C

C114922E04

REMOVAL

1. **TABLE OF BOLT, SCREW AND NUT (See page IP-8)**
2. **DISCONNECT CABLE FROM NEGATIVE BATTERY TERMINAL**
   Wait for 90 seconds after disconnecting the cable to prevent the airbag working.
3. **REMOVE INSTRUMENT PANEL SAFETY PAD SUB-ASSEMBLY (w/ Front Passenger Airbag)**
   HINT:
   Refer to the procedures up to the removal of the instrument panel safety pad sub-assembly (w/ front passenger airbag) (See page IP-8).
4. **REMOVE NETWORK GATEWAY ECU**
   (a) Disconnect the connector.
   (b) Disengage the 2 claw and remove the ECU aggregation cover No. 1.

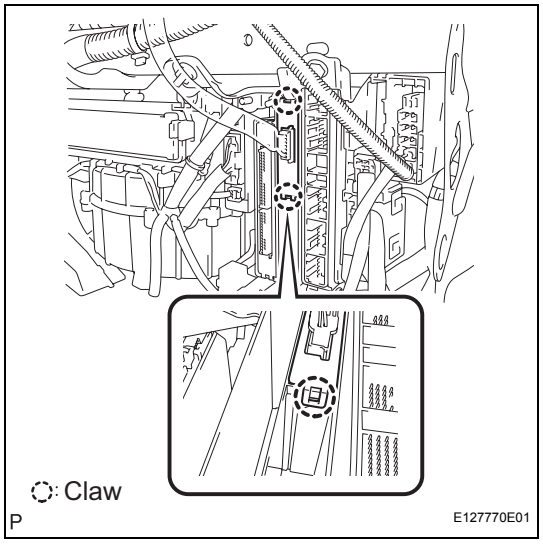

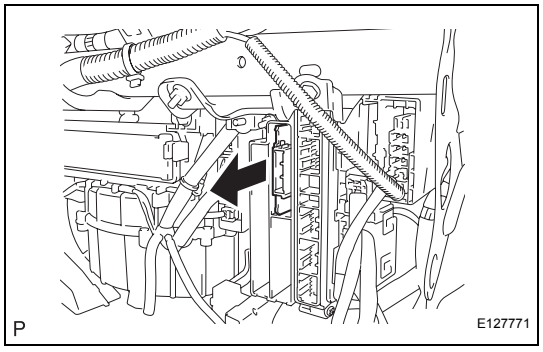

   (c) Remove the network gateway ECU assembly as shown in the illustration.

AV

INSTALLATION

1. INSTALL NETWORK GATEWAY ECU
2. INSTALL INSTRUMENT PANEL SAFETY PAD SUB-ASSEMBLY (w/ Front Passenger Airbag) (See page IP-17)
3. CENTER SPIRAL CABLE (See page RS-316)
4. INSTALL STEERING WHEEL ASSEMBLY (See page SR-46)
5. INSTALL STEERING PAD (See page RS-305)
6. CONNECT CABLE TO NEGATIVE BATTERY TERMINAL
7. PERFORM SYSTEM INITIALIZE (See page RS-306)
8. INSPECT STEERING PAD (See page RS-305)
9. INSPECT SRS WARNING LIGHT (See page RS-306)

STEERING PAD SWITCH

COMPONENTS

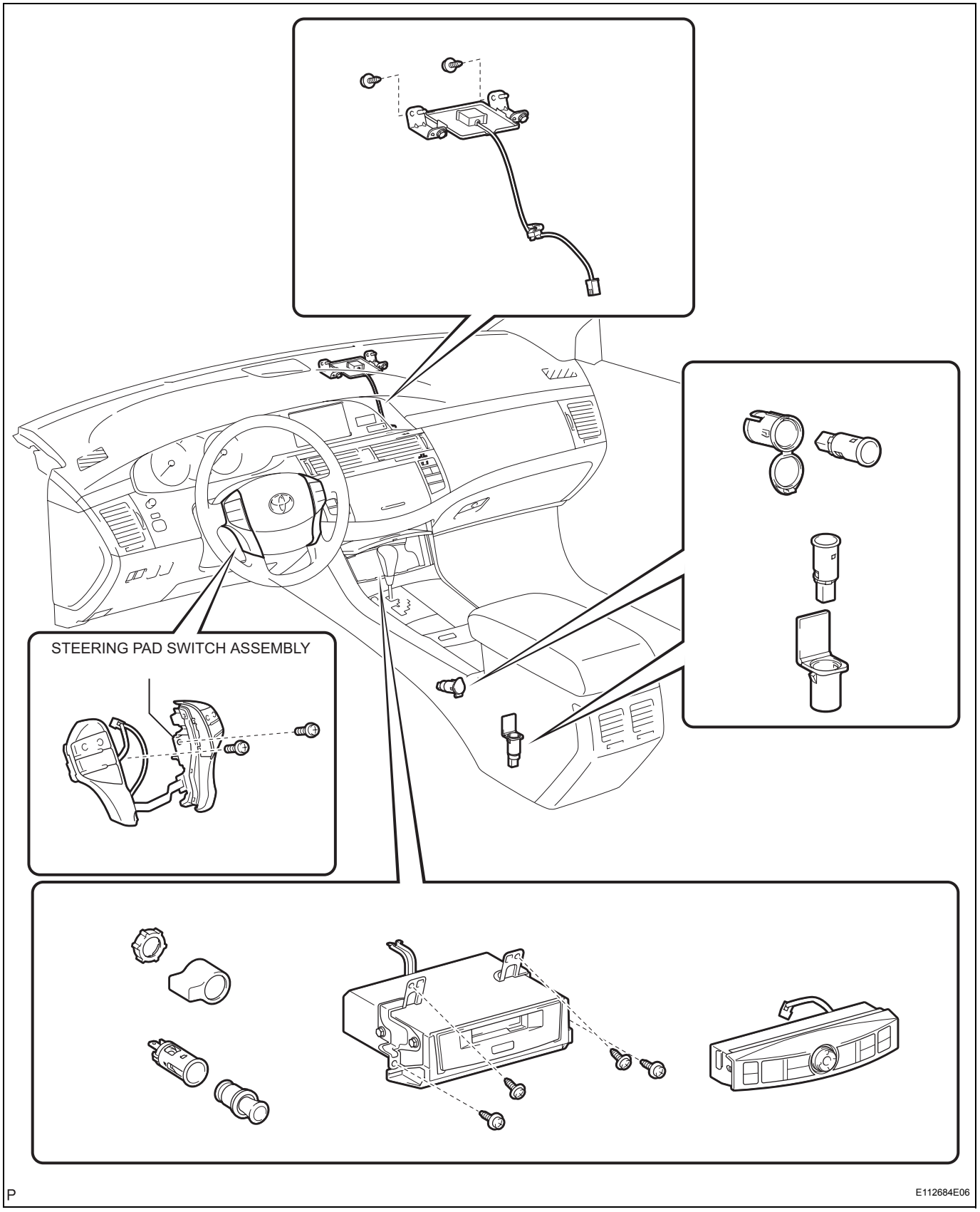

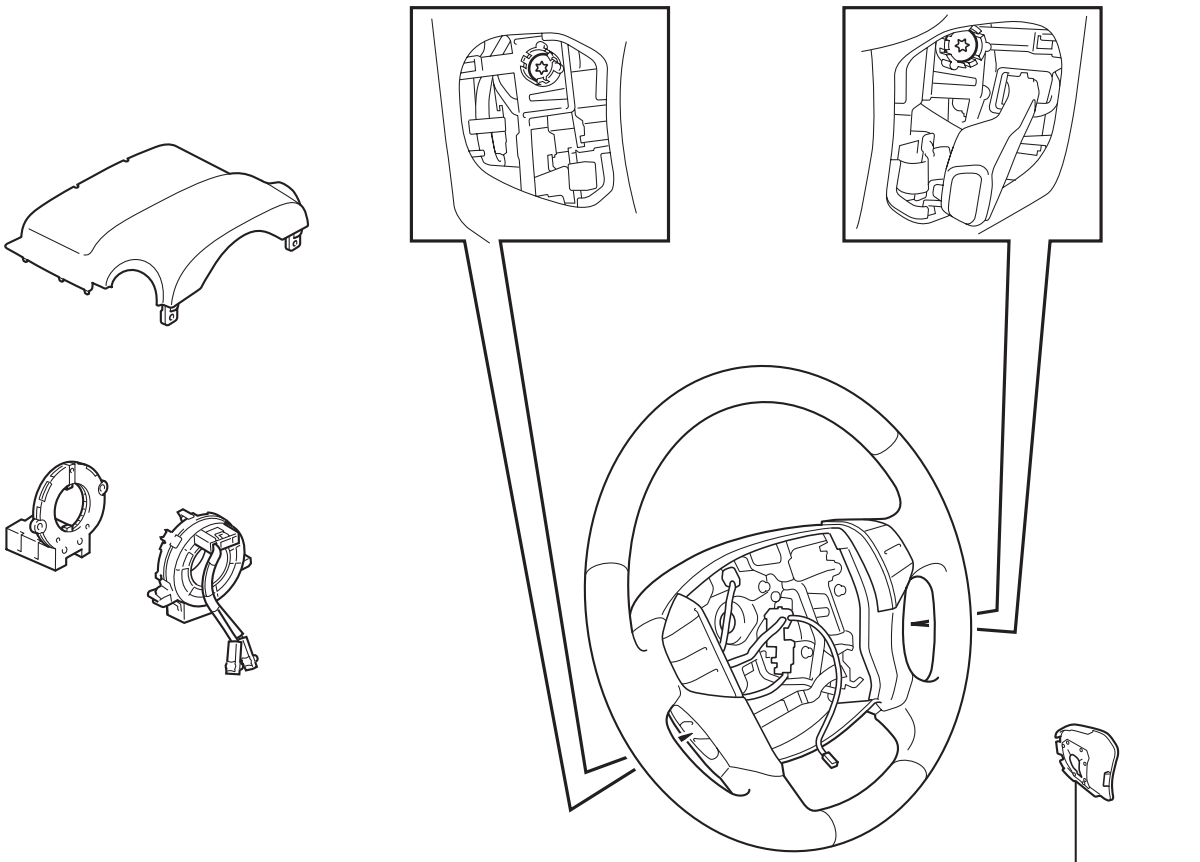

STEERING WHEEL COVER LOWER NO.2

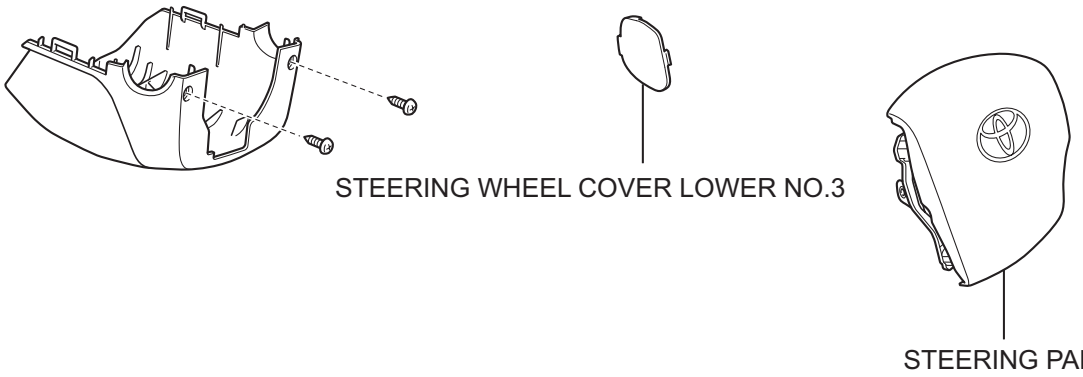

STEERING WHEEL COVER LOWER NO.3

STEERING PAD

C

C114921E07

AV

REMOVAL

1. **TABLE OF BOLT, SCREW AND NUT (See page IP-8)**
2. **DISCONNECT CABLE FROM NEGATIVE BATTERY TERMINAL**
   Wait for 90 seconds after disconnecting the cable to prevent the airbag working.
3. **REMOVE STEERING WHEEL COVER LOWER NO. 2 (See page RS-304)**
4. **REMOVE STEERING WHEEL COVER LOWER NO. 3 (See page RS-304)**
5. **REMOVE STEERING PAD (See page RS-304)**
6. **REMOVE STEERING PAD SWITCH ASSEMBLY**
   (a) Disconnect the connector.
   (b) Remove the 2 screws and remove the clamp.
   (c) Disengage the 4 pins and remove the steering pad switch assembly.

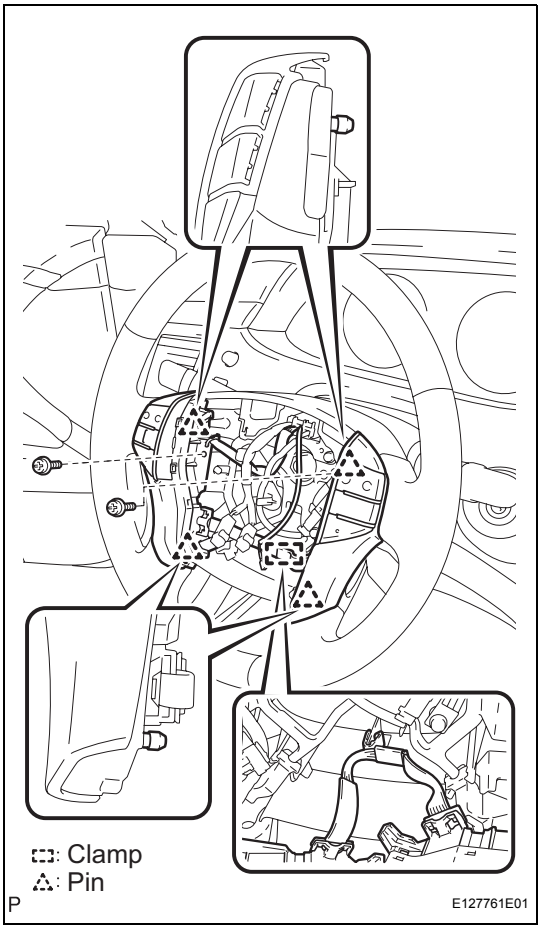

INSPECTION

1. **INSPECT STEERING PAD SWITCH (w/o Navigation System)**
   (a) Disconnect the steering pad switch assembly connector.

Steering Pad Switch Connector Front View:

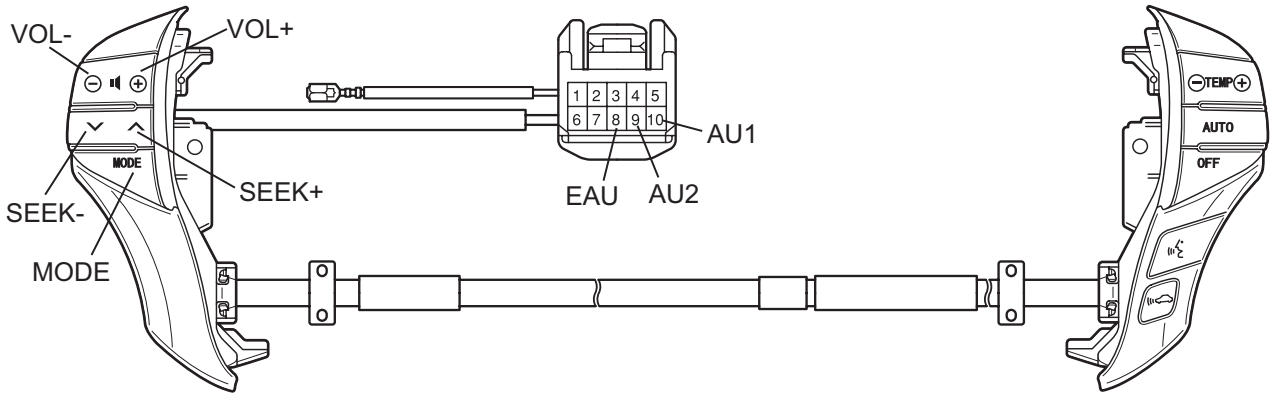

(b) Measure the resistance according to the values in the table below.

Standard resistance

Tester connection	Condition	Specified condition
AU1 - EAU	No switch is pushed	Approx. 100 kΩ
AU1 - EAU	SEEK+ switch: push	Approx. 0 Ω
AU1 - EAU	SEEK- switch: push	Approx. 0.3 kΩ
AU1 - EAU	VOL+ switch: push	Approx. 1 kΩ
AU1 - EAU	VOL- switch: push	Approx. 3.2 kΩ
AU2 - EAU	No switch is pushed	Approx. 100 kΩ
AU2 - EAU	MODE switch: push	Approx. 0 Ω

If the result is not as specified, replace the steering pad switch.

2. INSPECT STEERING PAD SWITCH (w/ Navigation System)

(a) Disconnect the steering pad switch assembly connector.

Steering Pad Switch Connector Front View:

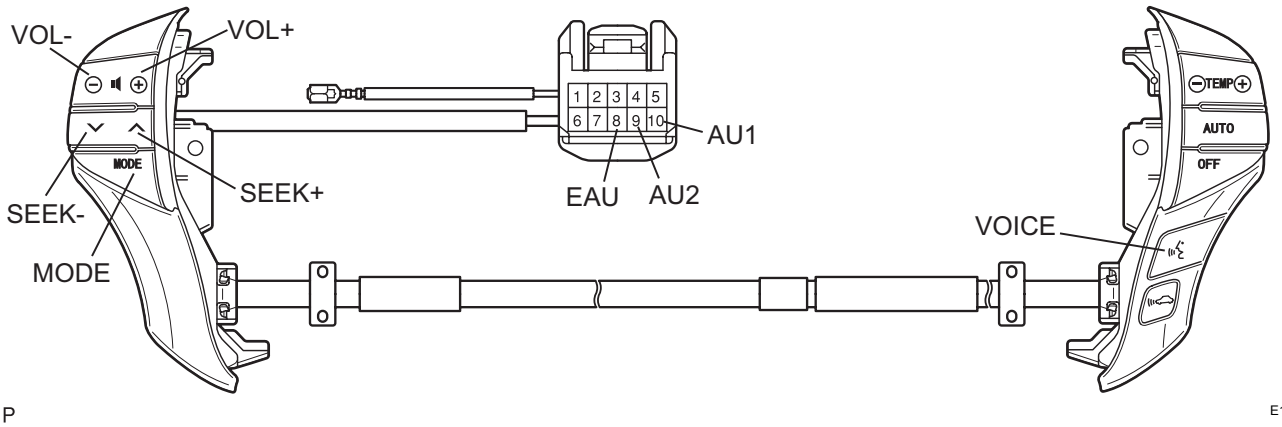

(b) Measure the resistance according to the values in the table below.

Standard resistance

Tester connection	Condition	Specified condition
AU1 - EAU	No switch is pushed	Approx. 100 kΩ
AU1 - EAU	SEEK+ switch: push	Approx. 0 Ω
AU1 - EAU	SEEK- switch: push	Approx. 0.3 kΩ
AU1 - EAU	VOL+ switch: push	Approx. 1 kΩ
AU1 - EAU	VOL- switch: push	Approx. 3.2 kΩ
AU2 - EAU	No switch is pushed	Approx. 100 kΩ
AU2 - EAU	MODE switch: push	Approx. 0 Ω
AU2 - EAU	VOICE switch: push	Approx. 3.2 kΩ

If the result is not as specified, replace the steering pad switch.

AV

INSTALLATION

1. **INSTALL STEERING PAD SWITCH ASSEMBLY**
2. **INSTALL STEERING PAD (See page RS-305)**
3. **CONNECT CABLE TO NEGATIVE BATTERY TERMINAL**
   Some systems need initialization when disconnecting the cable from the negative battery terminal.
4. **PERFORM SYSTEM INITIALIZE (See page RS-306)**
5. **INSPECT STEERING PAD (See page RS-305)**
6. **INSPECT SRS WARNING LIGHT (See page RS-306)**

REMOVAL

1. **REMOVE ROOF CONSOLE BOX ASSEMBLY (See page IR-16)**
2. **REMOVE TELEPHONE MICROPHONE ASSEMBLY (See page AV-222)**
3. **REMOVE AMPLIFIER MICROPHONE ASSEMBLY**
   (a) Remove the clamp.
   (b) Disengage the 4 claws and remove the microphone retainer.

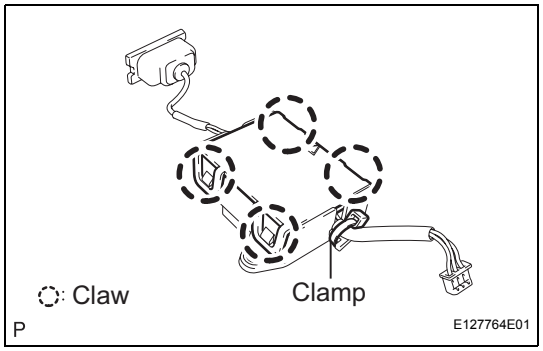

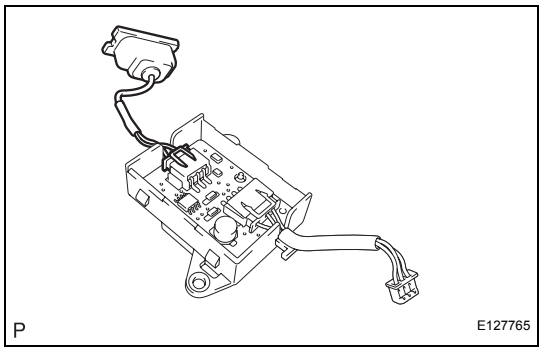

   (c) Disconnect the connector and remove the amplifier microphone.

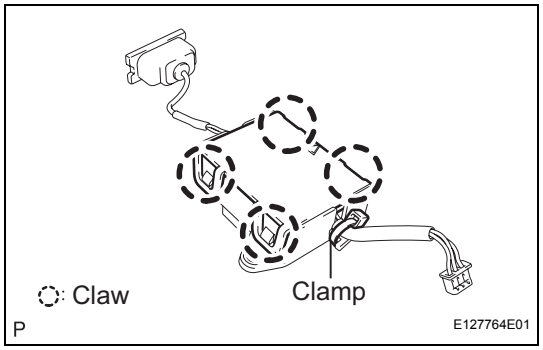

INSTALLATION

1. **INSTALL AMPLIFIER MICROPHONE ASSEMBLY**
   (a) Install the amplifier microphone with the 4 claws and the new clamp.
2. **INSTALL TELEPHONE MICROPHONE ASSEMBLY**
3. **INSTALL ROOF CONSOLE BOX ASSEMBLY**

AV

MICROPHONE

COMPONENTS

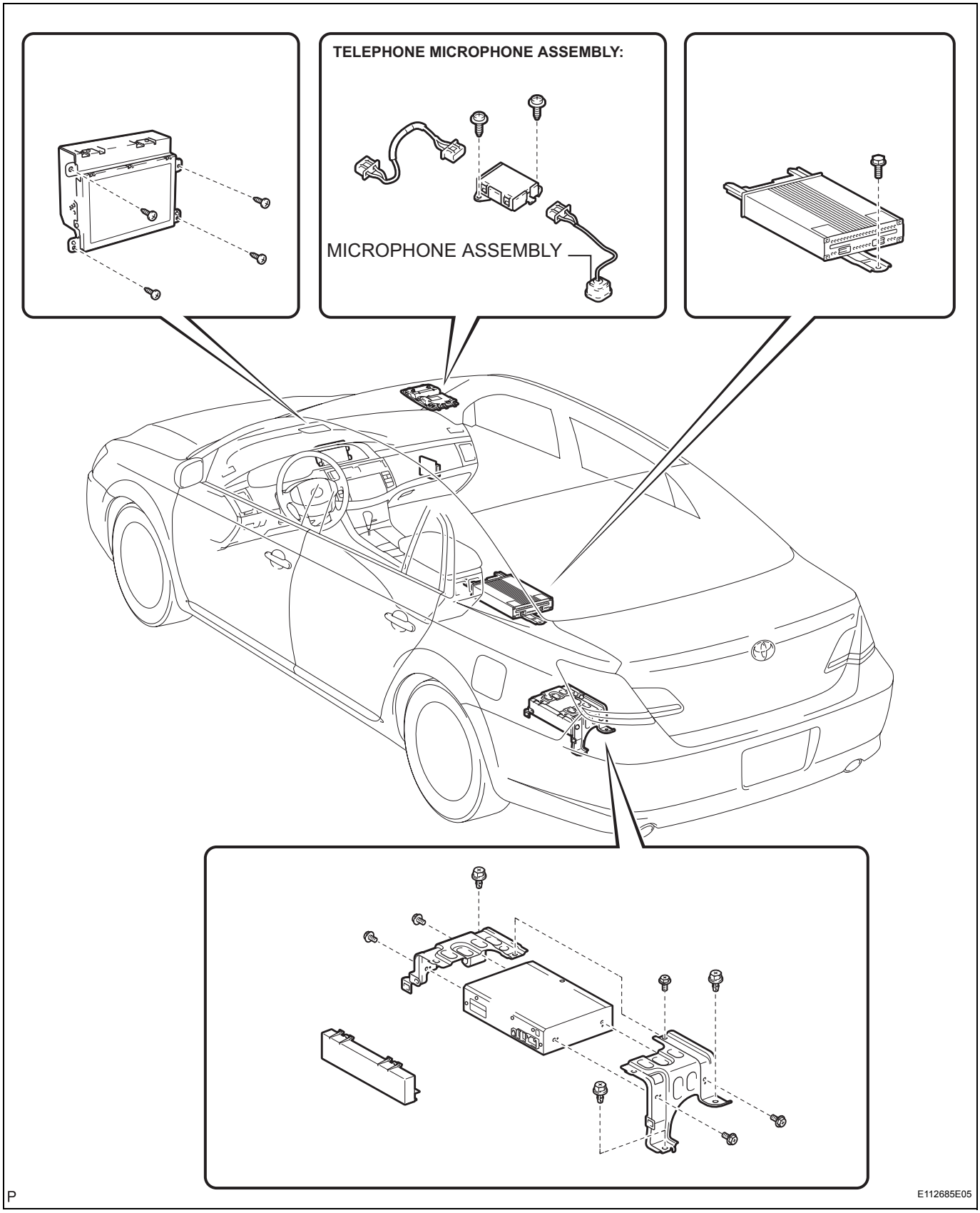

AV

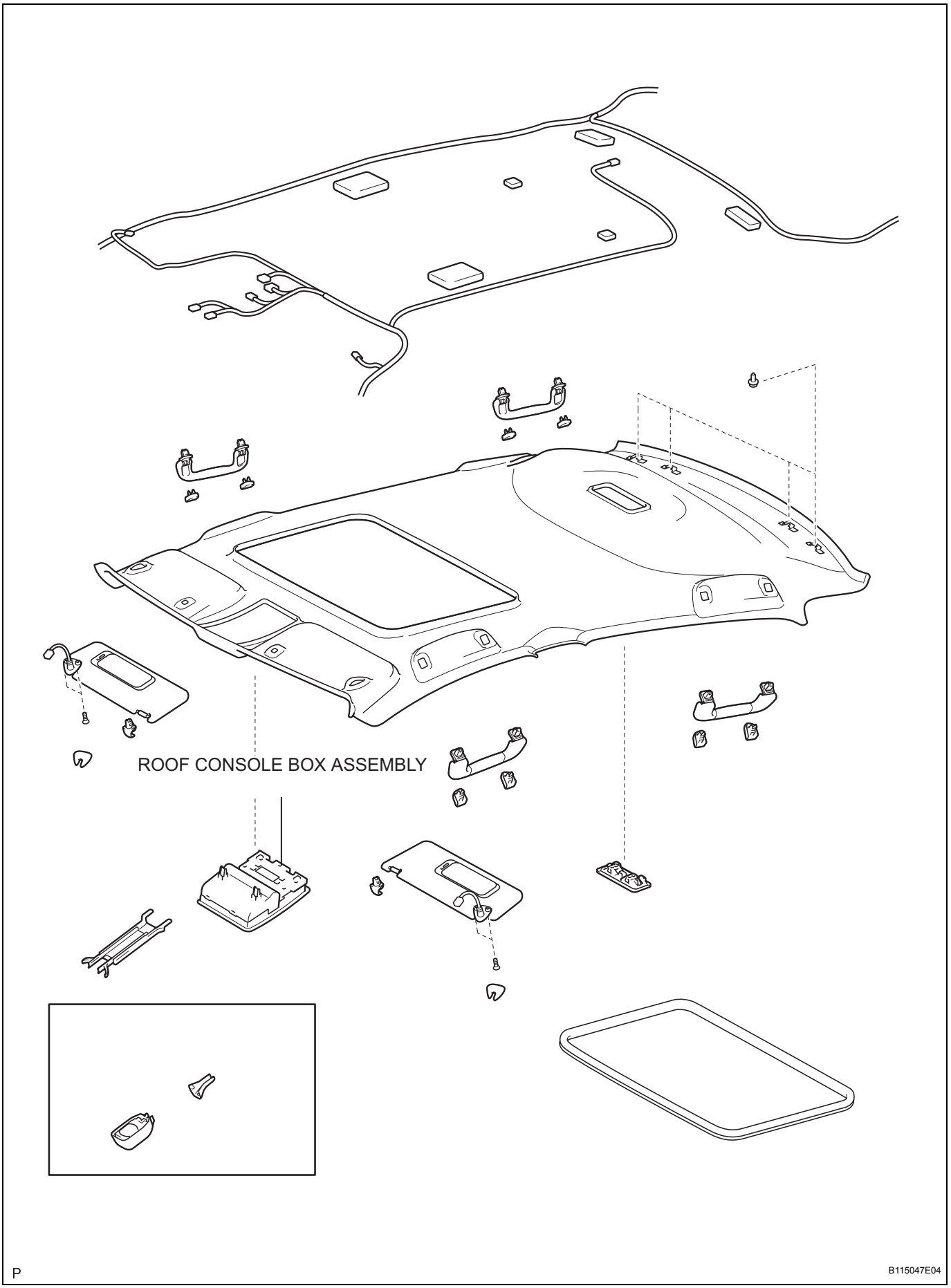

REMOVAL

1. **REMOVE ROOF CONSOLE BOX ASSEMBLY (See page IR-16)**
2. **REMOVE TELEPHONE MICROPHONE ASSEMBLY (See page AV-222)**
3. **REMOVE AMPLIFIER MICROPHONE ASSEMBLY**
   (a) Remove the clamp.
   (b) Disengage the 4 claws and remove the microphone retainer.

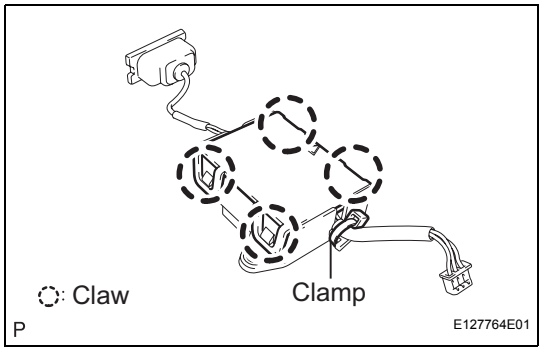

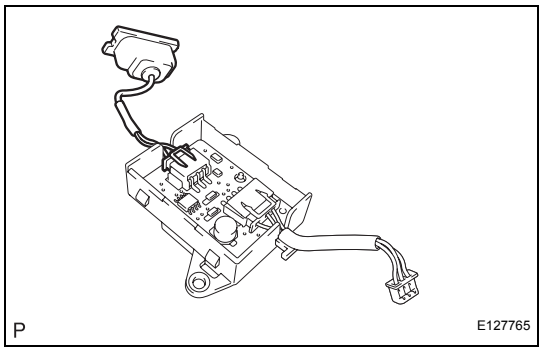

   (c) Disconnect the connector and remove the amplifier microphone.

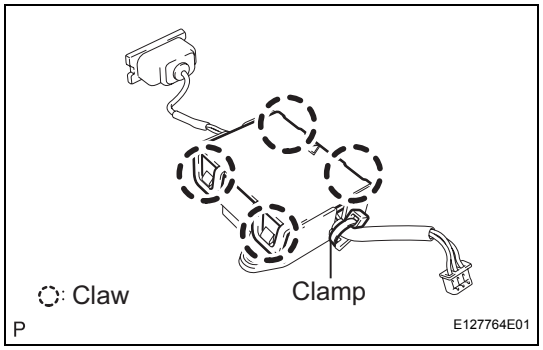

INSTALLATION

1. **INSTALL AMPLIFIER MICROPHONE ASSEMBLY**
   (a) Install the amplifier microphone with the 4 claws and the new clamp.
2. **INSTALL TELEPHONE MICROPHONE ASSEMBLY**
3. **INSTALL ROOF CONSOLE BOX ASSEMBLY**

AV

MICROPHONE AMPLIFIER

COMPONENTS

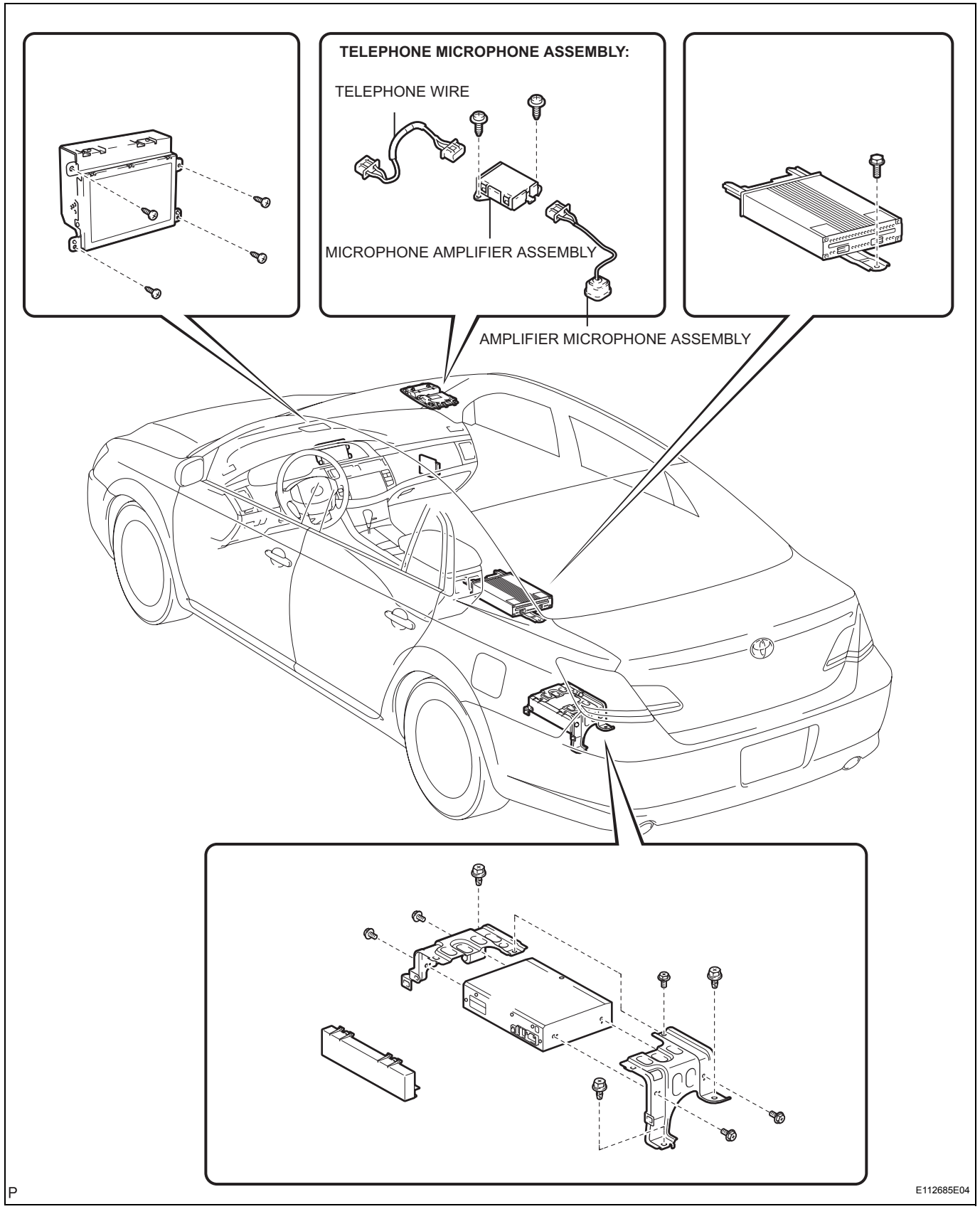

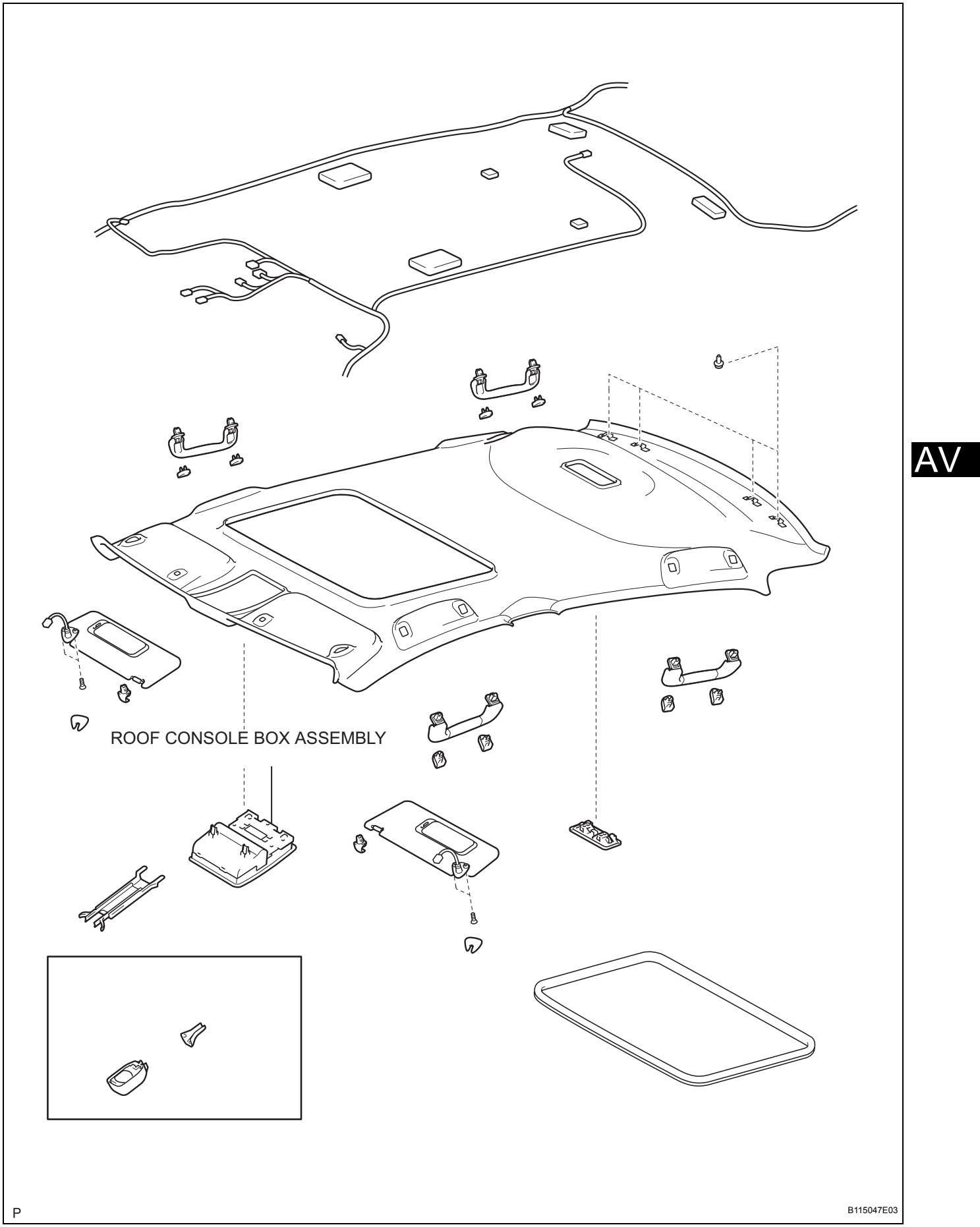
ROOF CONSOLE BOX ASSEMBLY
P
B115047E03

REMOVAL

1. **REMOVE ROOF CONSOLE BOX ASSEMBLY (See page IR-16)**

2. **REMOVE TELEPHONE MICROPHONE ASSEMBLY**
   (a) Disengage the claw and remove the clamp.
   (b) Remove the 2 screws and remove the telephone microphone assembly.

3. **REMOVE AMPLIFIER MICROPHONE ASSEMBLY**

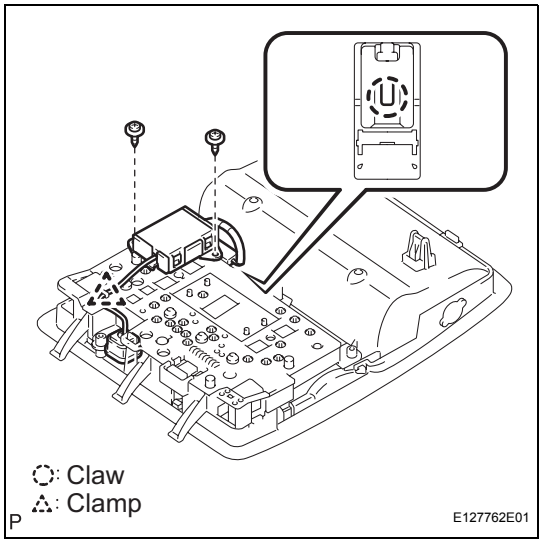

4. **REMOVE TELEPHONE WIRE**
   (a) Disconnect the connector and remove the telephone wire.

5. **REMOVE MICROPHONE AMPLIFIER ASSEMBLY**

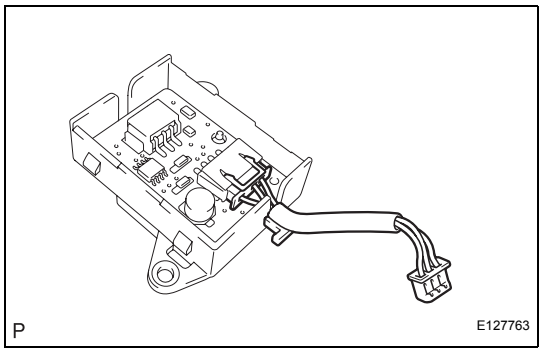

INSTALLATION

1. **INSTALL MICROPHONE AMPLIFIER ASSEMBLY**
2. **INSTALL TELEPHONE WIRE**
3. **INSTALL AMPLIFIER MICROPHONE ASSEMBLY**
4. **INSTALL TELEPHONE MICROPHONE ASSEMBLY**
5. **INSTALL ROOF CONSOLE BOX ASSEMBLY**

WINDOW GLASS ANTENNA WIRE

INSPECTION

1. INSPECT WINDOW GLASS ANTENNA WIRE

NOTICE:

When cleaning the glass, use a soft, dry cloth, and wipe the glass in the direction of the wire. Take care not to damage the wires. Do not use detergents or glass cleaners with abrasive ingredients. When measuring voltage, wind a piece of tin foil around the top of the negative probe and press the foil against the wire with your finger, as shown in the illustration.

(a) Check the continuity, at the center of each antenna wire, as shown in the illustration.

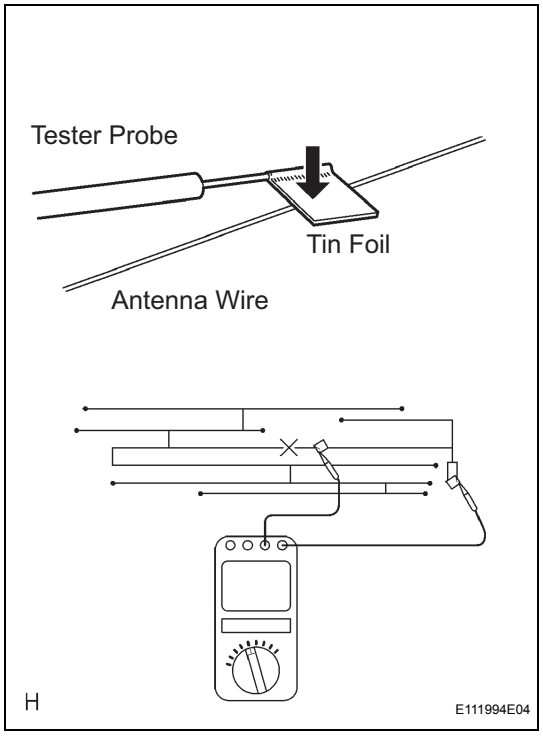

REPAIR

1. REPAIR WINDOW GLASS ANTENNA WIRE

(a) Clean the broken wire tips with a grease, wax and silicone remover.

(b) Place masking tape along both sides of the wire to be temporarily hold it in place.

(c) Thoroughly mix the repair agent (Dupont paste No. 4817).

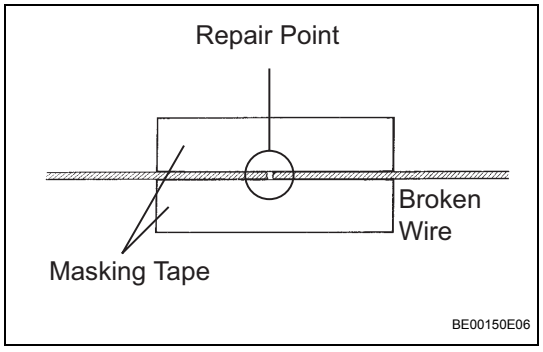

AV

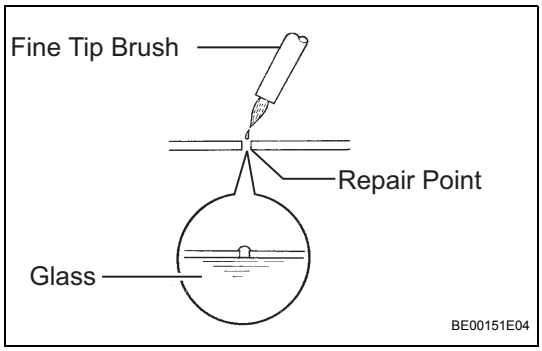

(d) Using a fine tip brush, apply a small amount of the mixed repair agent to the wire.
(e) After a few minutes, remove the masking tape.
(f) Do not repair the defogger wire for at least 24 hours after the window glass (antenna wire repair).

AUTOMATIC TRANSAXLE SYSTEM

PRECAUTION

NOTICE:

- **Perform the RESET MEMORY (AT initialization) when replacing the automatic transaxle assembly, engine assembly or ECM (See page AX-15).**
- **Perform the REGISTRATION (VIN registration) when replacing the ECM (See page ES-19).**

HINT:
RESET MEMORY can not be completed by only disconnecting the battery cable.

1. PRECAUTION FOR DISCONNECTING THE BATTERY CABLE

NOTICE:

When disconnecting the negative (-) battery terminal, initialize the following systems after the terminal is reconnected.

System Name	See procedure
Power Window Control System	IN-29
Sliding Roof System	

2. EXPRESSION OF IGNITION SWITCH

The type of ignition switch used on this model differs according to the specifications of the vehicle.
The expressions listed in the table below are used in this section.

AX

Switch Type / Expression	Ignition Switch (Position)	Engine Switch (Condition)
Ignition switch off	LOCK	Off
Ignition switch on (IG)	ON	On (IG)
Ignition switch on (ACC)	ACC	On (ACC)
Engine start	START	Start

H

E116900E03

3. **The automatic transaxle is composed of highly precision-finished parts which need careful inspection before reassembly. Even a small nick could cause fluid leakage or affect the performance. The instructions here are organized so that you work on only one component group at a time. This will help avoid confusion caused by similar-looking parts of different sub-assemblies being on your workbench at the same time. The component groups are inspected and repaired from the converter housing side. Complete the inspection, repair and reassembly before proceeding to the next component group as much as possible. If a defect is found in a certain component group during reassembly, inspect and repair this group immediately. If a component group cannot be assembled because some parts are being ordered, be sure to keep all parts of the group in a separate container while proceeding with disassembly, inspection, repair and reassembly of other component groups. Recommended: ATF WS**
4. **All disassembled parts should be washed clean and any fluid passages and holes should be blown through with compressed air.**
5. **Dry all parts with compressed air. Never use a shop rag or a piece of cloth to dry them.**
6. **When using compressed air, always aim away from yourself to prevent accidentally spraying ATF or kerosene in your face.**
7. **Only recommended automatic transaxle fluid or kerosene should be used for cleaning.**
8. **After cleaning, the parts should be arranged in the correct order for efficient inspection, repair, and reassembly.**
9. **When disassembling a valve body, be sure to match each valve together with the corresponding spring.**
10. **New discs for the brakes and clutches that are to be used for replacement must be soaked in ATF for at least 15 minutes before reassembly.**
11. **All oil seal rings, clutch discs, clutch plates, rotating parts, and sliding surfaces should be coated with ATF prior to reassembly.**
12. **All gaskets and rubber O-rings should be replaced with new ones.**
13. **Do not apply adhesive cements to gaskets and similar parts.**
14. **Make sure that the ends of a snap ring are not aligned with one of the cutouts and are installed in the groove correctly.**
15. **When replacing a worn bushing, the sub-assembly containing the bushing must also be replaced.**

16. **Check thrust bearings and races for wear or damage. Replace them as necessary.**
17. **When working with FIPG material, you must observe the following:**
    - Using a razor blade and a gasket scraper, remove all the old packing (FIPG) material from the gasket surface.
    - Thoroughly clean all components to remove any loose material.
    - Clean both sealing surfaces with a non-residue solvent.
    - Parts must be reassembled within 10 minutes of application. Otherwise, the packing (FIPG) material must be removed and reapplied.

DEFINITION OF TERMS

Term	Definition
Monitor description	Description of what the ECM monitors and how it detects malfunctions (monitoring purpose and its details).
Related DTCs	Diagnostic code
Typical enabling condition	Preconditions that allow the ECM to detect malfunctions. With all preconditions satisfied, the ECM sets the DTC when the monitored value(s) exceeds the malfunction threshold(s).
Sequence of operation	The priority order that is applied to monitoring, if multiple sensors and components are used to detect the malfunction. While another sensor is being monitored, the next sensor or component will not be monitored until the previous monitoring has concluded.
Required sensor/components	The sensors and components that are used by the ECM to detect malfunctions.
Frequency of operation	The number of times that the ECM checks for malfunctions per driving cycle. "Once per driving cycle" means that the ECM detects malfunction only one time during a single driving cycle. "Continuous" means that the ECM detects malfunction every time when enabling condition is met.
Duration	The minimum time that the ECM must sense a continuous deviation in the monitored value(s) before setting a DTC. This timing begins after the "typical enabling conditions" are met.
Malfunction thresholds	Beyond this value, the ECM will conclude that there is a malfunction and set a DTC.
MIL operation	MIL illumination timing after a defect is detected. "Immediately" means that the ECM illuminates MIL the instant the ECM determines that there is a malfunction. "2 driving cycle" means that the ECM illuminates MIL if the same malfunction is detected again in the 2nd driving cycle.
Component operating range	Normal operation range of sensors and solenoids under normal driving conditions. Use these ranges as a reference. They cannot be used to judge if a sensor or solenoid is defective or not.

PARTS LOCATION

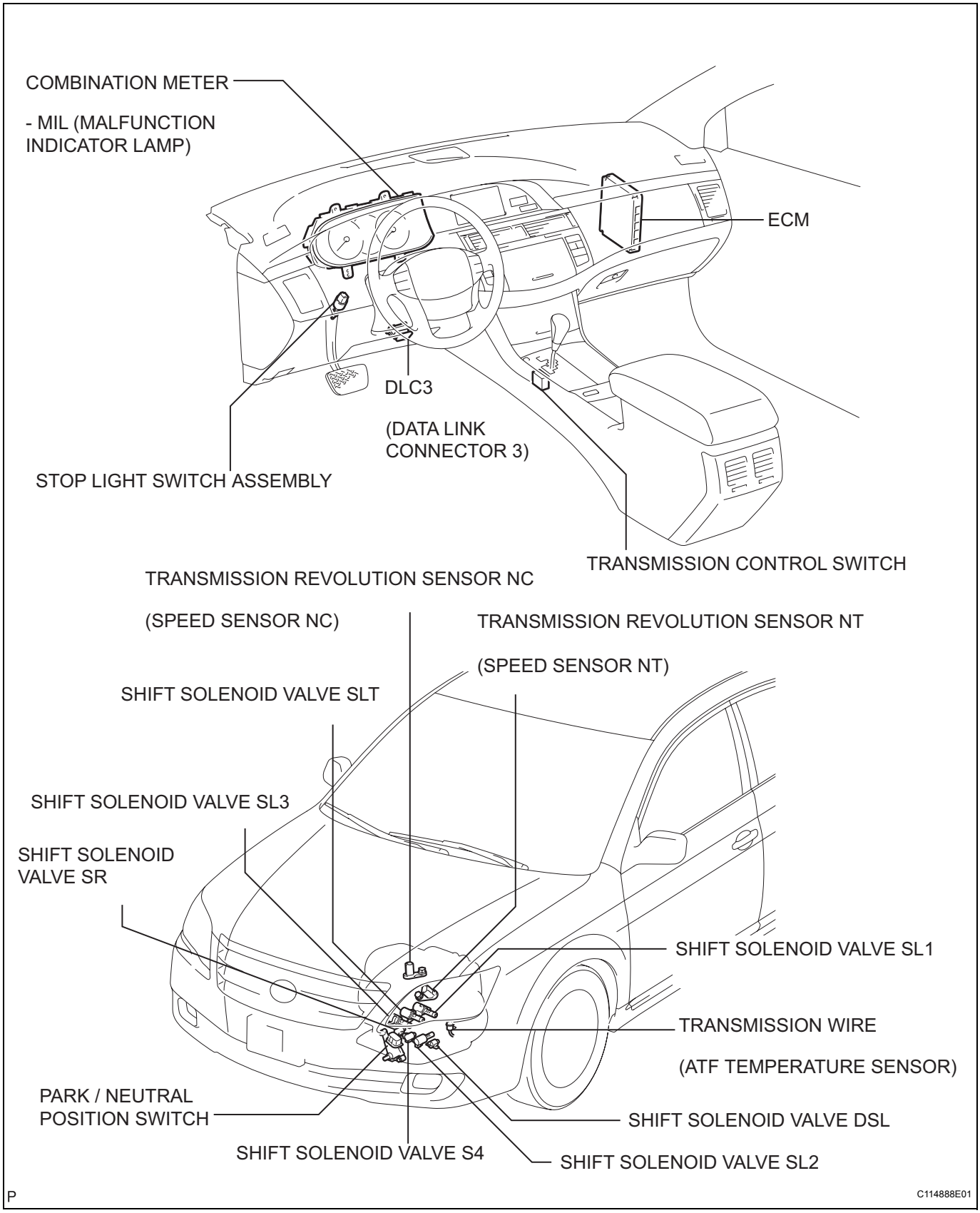

AX

SYSTEM DIAGRAM

The configuration of the electronic control system in the U151E automatic transaxles is as shown in the following chart.

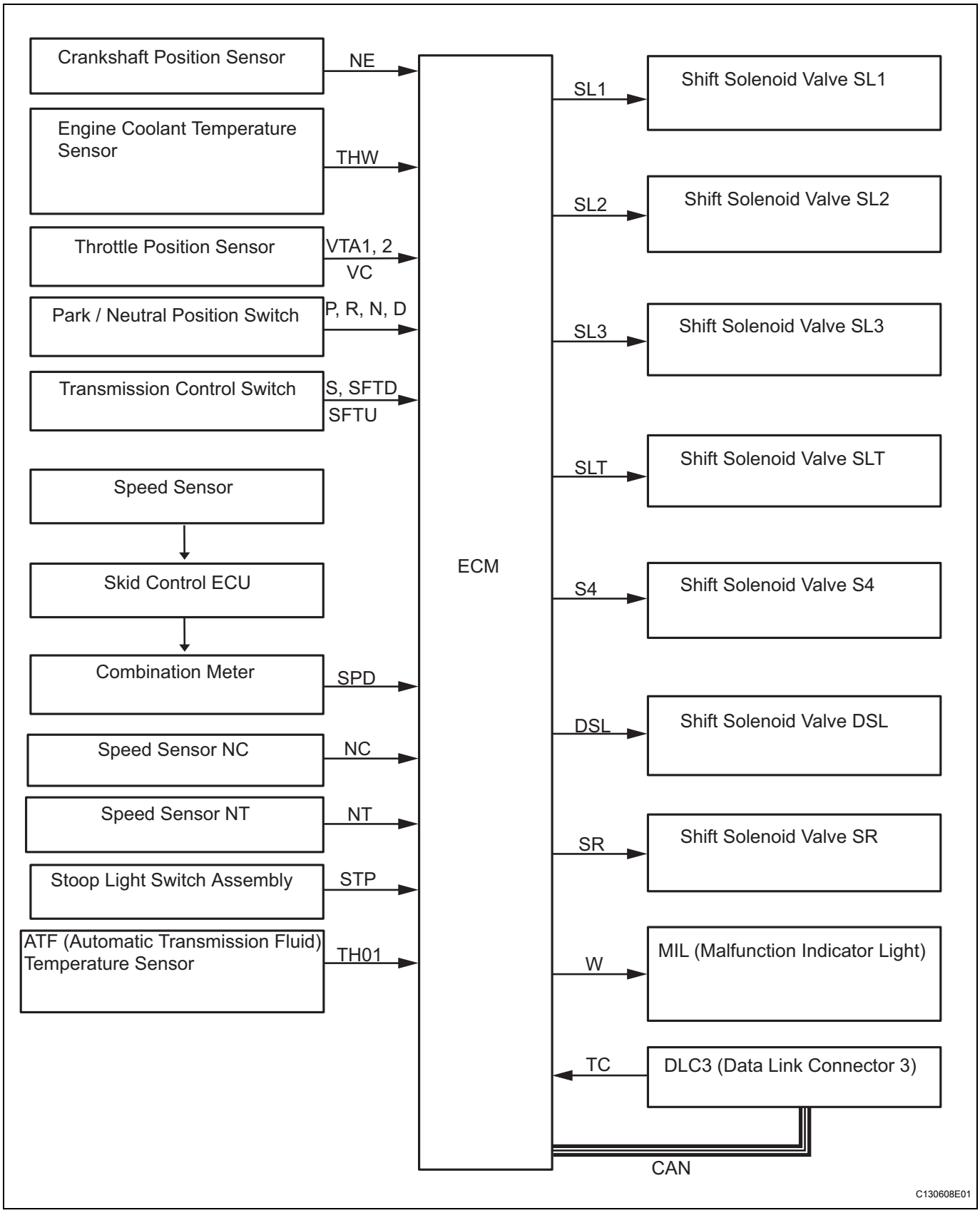

AX

SYSTEM DESCRIPTION

1. SYSTEM DESCRIPTION

(a) The ECT (Electronic controlled automatic transmission/transaxle) is an automatic transmission/transaxle that electronically controls shift timing using the ECM. The ECM detects electrical signals that indicate engine and driving conditions, and controls the shift point, based on driver habits and road conditions. As a result, fuel efficiency and power transmission performance are improved.

Shift shock has been reduced by controlling the engine and transmission simultaneously.

In addition, the ECT has features such as follows:

- Diagnostic function.
- Fail-safe function when a malfunction occurs.

HOW TO PROCEED WITH TROUBLESHOOTING

HINT:
The intelligent tester can be used at steps 3, 4, 6, and 9.

1	**Vehicle Brought to Workshop**

NEXT

2	**Customer Problem Analysis**

NEXT

3	**Connect the OBD II scan tool or intelligent tester to DLC3**

NEXT

4	**Check and Clear DTCs and Freeze Frame Data**

HINT:
(See page AX-26).

NEXT

5	**Visual Inspection**

NEXT

6	**Setting the Check Mode Diagnosis**

HINT:
(See page AX-27).

NEXT

7	**Problem Symptom Confirmation**

HINT:
(See page AX-9).

- **Symptom does not occur: Go to step 8**
- **Symptom occurs: Go to step 9**

AX

8	Symptom Simulation

HINT:
(See page IN-36).

NEXT

9	DTC Check

HINT:
(See page AX-26).

DTC is not output: Go to step 10

DTC is output: Go to step 17

10	Basic Inspection

HINT:
(See page AX-120, AX-126 and AX-169).

NG → Go to step 19

OK

11	Mechanical System Test

HINT:
(See page AX-11).

NG → Go to step 16

OK

12	Hydraulic Test

HINT:
(See page AX-13).

NG → Go to step 16

OK

13	Manual Shifting Test

HINT:
(See page AX-15).

NG → Go to step 15

OK

AX

14	Problem Symptoms Table Chapter 1

HINT:
(See page AX-18).

NG → Go to step 18

OK

15	Problem Symptoms Table Chapter 2

HINT:
(See page AX-18).

NEXT

16	Part Inspection

→ Go to step 19

17	DTC Chart

HINT:
(See page AX-32).

NEXT

18	Circuit Inspection

NEXT

19	Repair or Replace

NEXT

20	Confirmation Test

NEXT

End

AX

ROAD TEST

1. PROBLEM SYMPTOM CONFIRMATION

(a) Based on the result of the customer problem analysis, try to reproduce the symptoms. If the problem is that the transaxle does not shift up, shift down, or the shift point is too high or too low, conduct the following road test referring to the automatic shift schedule and simulate the problem symptoms.

2. ROAD TEST

NOTICE:

Perform the test at the ATF (Automatic Transmission Fluid) temperature 50 to 80°C (122 to 176°F) in the normal operation.

(a) D position test:

Shift into the D position and fully depress the accelerator pedal and check the following points.

(1) Check up-shift operation.

Check that 1 → 2, 2 → 3, 3 → 4 and 4 → 5th up-shifts take place, and that the shift points conform to the automatic shift schedule (See page SS-20).

HINT:

5th Gear Up-shift Prohibition Control

- Engine coolant temperature is 68°C (154°F) or less and vehicle speed is at 70 km/h (43 mph) or less.
- ATF temperature is -2°C (28°F) or less.

4th Gear Up-shift Prohibition Control

- Engine coolant temperature is 65°C (149°F) or less and vehicle speed is at 55 km/h (34 mph) or less.

5th and 4th Gear Lock-up Prohibition Control

- Brake pedal is depressed.
- Accelerator pedal is released.
- Engine coolant temperature is 60°C (140°F) or less.

(2) Check for shift shock and slip.

Check for shock and slip at the 1 → 2, 2 → 3, 3 → 4 and 4 → 5th up-shifts.

(3) Check for abnormal noise and vibration.

Check for abnormal noise and vibration when up-shifting from 1 → 2, 2 → 3, 3 → 4, and 4 → 5 while driving with the shift lever in the D position, and also check while driving in the lock-up condition.

HINT:

The check for the cause of abnormal noise and vibration must be done thoroughly as it could also be due to loss of balance in the differential, torque converter clutch, etc.

(4) Check kick-down operation.
Check vehicle speeds when the 2nd to 1st, 3rd to 2nd, 4th to 3rd, and 5th to 4th kick-downs take place while driving with the shift lever in the D position. Confirm that each speed is within the applicable vehicle speed range indicated in the automatic shift schedule (See page SS-20).
(5) Check abnormal shock and slip at kick-down.
(6) Check the lock-up mechanism.
- Drive in D position (5th gear), at a steady speed (lock-up ON).
- Lightly depress the accelerator pedal and check that the engine speed does not change abruptly.

HINT:
- There is no lock-up in the 1st and 2nd gear.
- 4th lock-up operates while uphill-downhill is active in the D position.
- If there is a big jump in engine speed, there is no lock-up.

(b) S position test
Shift to the S position, depress the accelerator pedal and check the following points:
(1) Check shift operation.
- While driving in the D position and 5th gear, shift into the S position and back to the D position. Check that the gear change 5 → 4 down-shift and 4 → 5 up-shift can be performed.
- With the shift lever in the S position (with the vehicle stopped), shift into the "+" position to check that the shift position on the combination meter changes as follows : 1 → 2, 2 → 3, 3 → 4 and 4 → 5.
- While driving in the 4(S) position and 4th gear (at a vehicle speed of about 40 to 50km/h (25 to 31 mph)), shift into the "-" position and check if the 3rd gear down-shift occurs and the engine brake performs properly.
- While driving in the 3(S) position and 3rd gear (at a vehicle speed of about 30 to 40 km/h (19 to 25 mph)), shift into the "-" position and check if the 2nd gear down-shift occurs and the engine brake performs properly.
- While driving in the 2(S) position and 2nd gear (at a vehicle speed of about 20 to 30 km/h (12 to 19 mph)), shift into the "-" position and check if the 1st gear down-shift occurs and the engine brake performs properly.

HINT:
Manual shift (S position) prohibition control
- Down-shifting causes engine overrun.

AX

- Down-shifting is required continuously. (Down-shifting to 1st gear may not be performed.)

(c) R position test:
Shift into the R position and fully depress the accelerator pedal and check for slipping.
CAUTION:
Before conducting this test ensure that the test area is free from people and obstruction.

(d) P position test:
Stop the vehicle on a grade (more the 5°) and after shifting into the P position, release the parking brake. Then, check that the parking lock pawl holds the vehicle in place.

(e) Uphill/downhill control function test:
(1) Check that the gear does not up-shift to the 4th or 5th gear while the vehicle is driving uphill.
(2) Check that the gear automatically down-shifts from the 5th to 4th or from the 4th to 3rd gear when brake is applied while the vehicle is driving downhill.

MECHANICAL SYSTEM TESTS

1. PERFORM MECHANICAL SYSTEM TESTS

(a) Measure the stall speed.

The object of this test is to check the overall performance of the transaxle and engine by measuring the stall speeds in the D position.

NOTICE:

- **Driving test should be done on a paved road (a nonskid road).**
- **Perform the test at the normal operating ATF (Automatic Transmission Fluid) temperature 50 to 80°C (122 to 176°F).**
- **Do not continuously run this test for longer than 10 seconds.**
- **To ensure safety, do this test in a wide, clear level area which provides good traction.**
- **The stall test should always be carried out in pairs. One technician should observe the conditions of wheels or wheel stoppers outside the vehicle while the other is doing the test.**

(1) Chock the 4 wheels.

(2) Connect an OBD II scan tool or intelligent tester to the DLC3.

(3) Fully apply the parking brake.

(4) Keep your left foot pressed firmly on the brake pedal.

(5) Start the engine.

(6) Shift into the D position. Press all the way down on the accelerator pedal with your right foot.

(7) Quickly read the stall speed at this time.

Stall speed:

2,250 +- 150 rpm

AX

Evaluation:

Problem	Possible cause
(a) Stall engine speed is low in D position	• Engine power output may be insufficient • Stator one-way clutch not operating properly HINT: If the value is less than the specified value by 600 rpm or more, the torque converter could be faulty.
(b) Stall engine speed is high in D position	• Line pressure is too low • Forward clutch slipping • U/D (Underdrive) brake slipping • U/D (Underdrive) one-way clutch is not operating properly • No.1 one-way clutch not operating properly • Improper fluid level

(b) Measure the time lag.

(1) When the shift lever is shifted while the engine is idling, there will be a certain time lapse or lag before the shock can be felt. This is used for checking the condition of the clutch and brake.

NOTICE:

- **Perform the test at the normal operating ATF (Automatic Transmission Fluid) temperature: 50 to 80°C (122 to 176°F).**

- **Be sure to allow 1 minute interval between tests.**
- **Perform the test three times, and measure the time lags. Calculate the average value of the three time lags.**

(2) Connect an OBD II scan tool or intelligent tester to the DLC3.
(3) Fully apply the parking brake.
(4) Start and warm up the engine and check idle speed.
Idle speed:
approx. 700 rpm (In N position and A/C OFF)
(5) Shift the lever from N to D position. Using a stop watch, measure the time from when the lever is shifted until the shock is felt.
Time lag:
N → D less than 1.2 seconds
(6) In the same way, measure the time lag for N → R.
Time lag:
N → R less than 1.5 seconds

Evaluation (If N → D or N → R time lag is longer than the specified):

Problem	Possible cause
N → D time lag is longer	• Line pressure is too low • Forward clutch worn • No.1 one-way clutch is not operating properly • U/D (Underdrive) one-way clutch is not operating • U/D (Underdrive) brake worn
N → R time lag is longer	• Line pressure is too low • Reverse clutch worn • 1st and reverse brake worn • U/D (Underdrive) brake worn

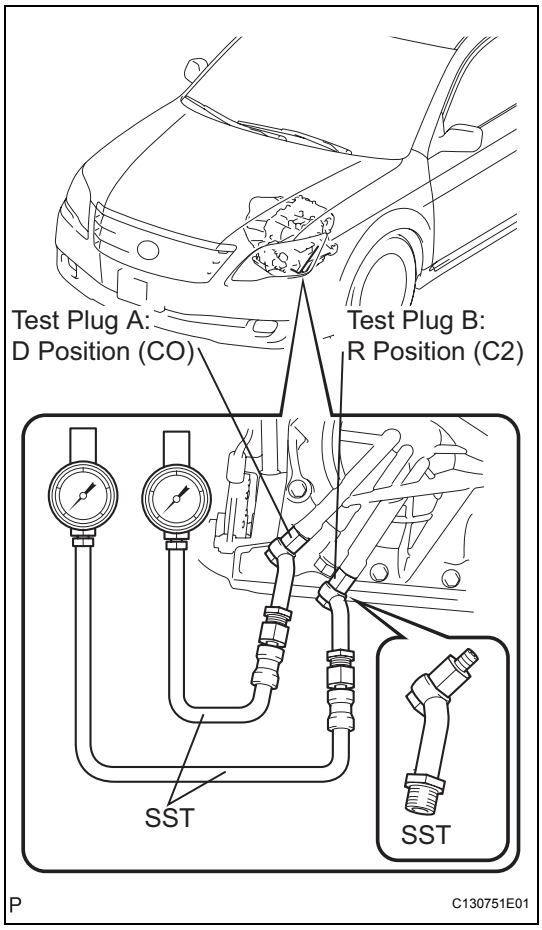

HYDRAULIC TEST

1. PERFORM HYDRAULIC TEST

(a) Measure the line pressure.

NOTICE:

- **Perform the test at the normal operating ATF (Automatic Transmission Fluid) temperature: 50 to 80°C (122 to 176°F).**
- **The line pressure test should always be carried out in pairs. One technician should observe the conditions of wheels or wheel stoppers outside the vehicle while the other is performing the test.**
- **Be careful to prevent SST hose from interfering with the exhaust pipe.**
- **This Check must be conducted after checking and adjusting engine.**
- **Perform under condition that A/C is OFF.**
- **When conducting stall test, do not continue more than 10 seconds.**

(1) Warm up the ATF (Automatic Transmission Fluid).

(2) Lift the vehicle up.

(3) Remove the engine under cover.

(4) Connect intelligent tester to DLC3.

(5) Remove the test plug A on the transaxle case front left side and install the SST.

SST 09992-00095 (09992-00231, 09992-00271)

NOTICE:

There is a difference in installation point between D position and R position.

(6) Start the engine.

(7) Using intelligent tester, shift to D position and hold 3rd gear by active test, and measure the line pressure in idling.

Specified line pressure:

Condition	D position kPa (kgf / cm^2, psi)
Idling	372 to 412 kPa (3.8 to 4.2 kgf/cm^2, 54 to 60 psi)

(8) Turn the ignition switch off.

AX

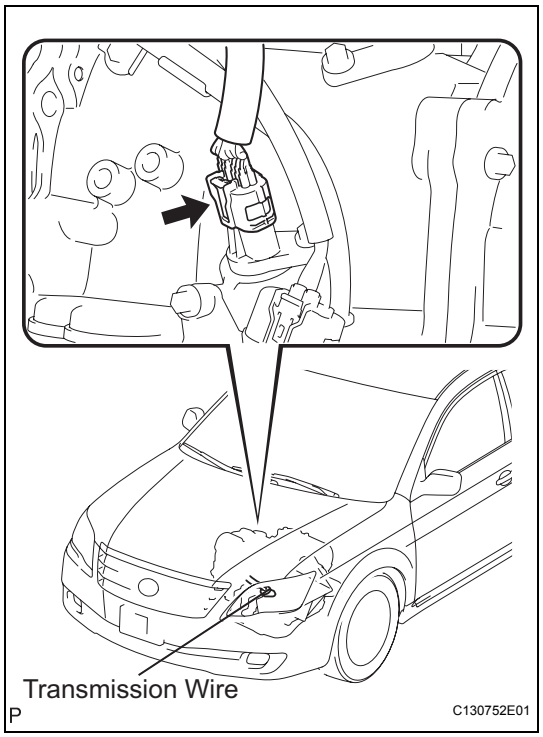

(9) Disconnect the connector of the transmission wire.
HINT:
Disconnect the connector only when performing the D position stall test.
(10) Start the engine.
(11) Firmly depress the brake pedal, shift to the D position, depress the accelerator pedal all the way down and check the line pressure while the stall test is performed.
Specified line pressure:

Condition	R position kPa (kgf / cm^2, psi)
Stall test	931 to 1,031 kPa (9.5 to 10.5 kgf/cm^2, 135 to 150 psi)

(12) Turn the ignition switch off.
(13) Remove the SST, install the test plug A.
(14) Remove the test plug B, install the SST and start engine.
SST 09992-00095 (09992-00231, 09992-00271)
(15) Connect the transmission wire connector, depress the brake pedal firmly, shift to the R position and check that the line pressure while the engine is idling and during the stall test.
Specified line pressure:

Condition	R position kPa (kgf / cm^2, psi)
Idling	672 to 742 kPa (6.9 to 7.6 kgf/cm^2, 97 to 108 psi)
Stall test	1,768 to 1,968 kPa (18.0 to 20.1 kgf/cm^2, 256 to 285 psi)

(16) Remove the SST, install the test plug B.
(17) Clear the DTC.

AX

Evaluation:

Problem	Possible cause
Measured values are higher than specified in all positions	• Shift solenoid valve (SLT) defective • Regulator valve defective
Measured values are lower than specified in all positions	• Shift solenoid valve (SLT) defective • Regulator valve defective • Oil pump defective • U/D (Underdrive) direct clutch defective
Pressure is low in the D position only	• D position circuit fluid leak • Forward clutch defective
Pressure is low in the R position only	• R position circuit fluid leak • Reverse clutch defective • 1st and reverse brake defective

MANUAL SHIFTING TEST

1. PERFORM MANUAL SHIFTING TEST

HINT:

- With this test, it can be determined whether the trouble occurs in the electrical circuit or is a mechanical problem in the transaxle.
- If any abnormalities are found in the following test, the problem is in the transaxle itself.

(a) Disconnect the connector of the transmission wire.

(b) Drive with the transmission wire disconnected. Shifting the shift lever to the D position to check whether the shifting condition changes the table below.

Shift Position	Shifting Condition
D	No Shift (Not Change)

HINT:

When driving with the transmission wire disconnected, the shift lever position is in D, the gear position is held in 4th. However, when the shift position is in R or P, the operation is same as usual.

(c) Connect the connector of the transmission wire.

(d) Clear the DTC.

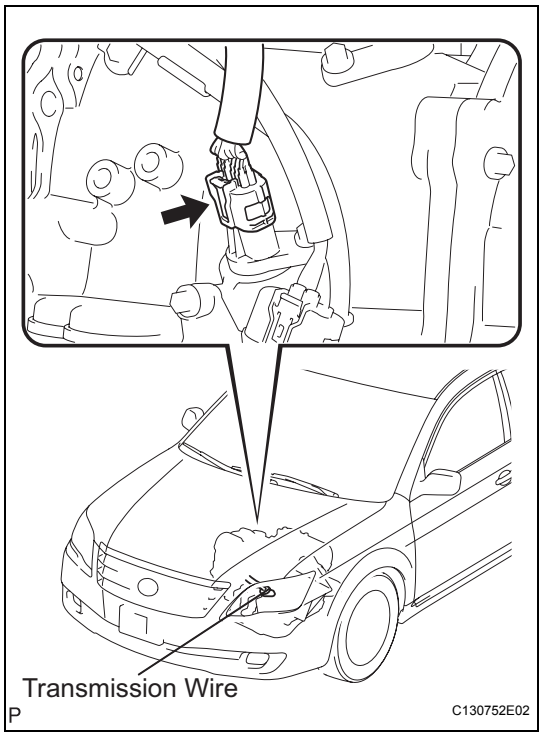

INITIALIZATION

1. RESET MEMORY

NOTICE:

- **Perform the RESET MEMORY (AT initialization) when replacing the automatic transaxle assembly, engine assembly or ECM.**
- **The RESET MEMORY can be performed only with the Intelligent tester.**

HINT:

The ECM memorizes the condition that the ECT controls the automatic transaxle assembly and engine assembly according to those characteristics. Therefore, when the automatic transaxle assembly, engine assembly, or ECM has been replaced, it is necessary to reset the memory so that the ECM can memorize the new information.

Reset procedure is as follows.

(a) Turn the engine switch off.

(b) Connect the intelligent tester to the DLC3.

(c) Turn the ignition switch on (IG) and push the intelligent tester main switch on.

(d) Select the item "DIAGNOSIS / ENHANCED OBD II".

(e) Perform the reset memory procedure from the ENGINE menu.

CAUTION:

After performing the RESET MEMORY, be sure to perform the ROAD TEST (See page AX-9) described earlier.

HINT:

The ECM is learned by performing the ROAD TEST.

(1) Tester menu flow:

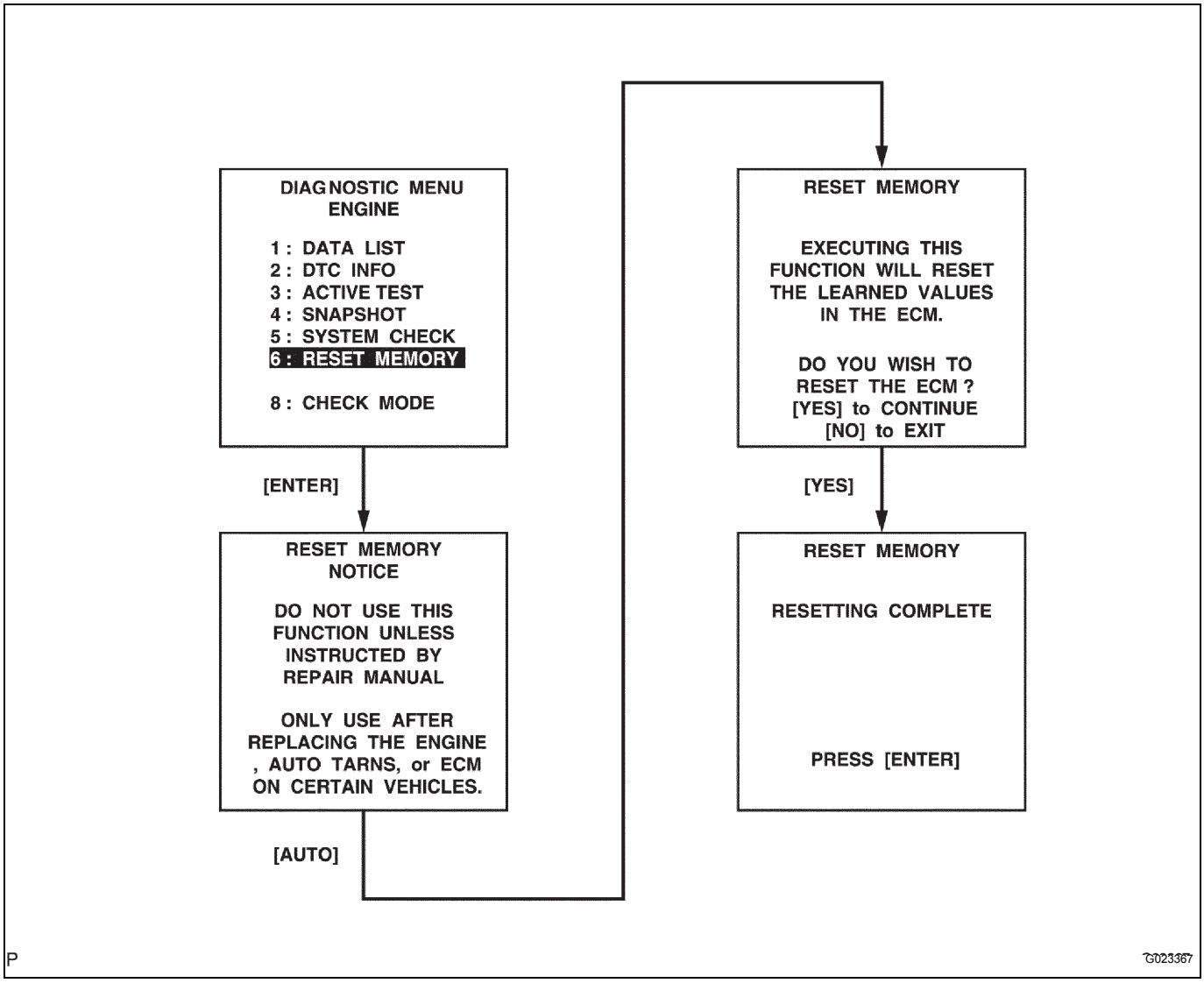
DIAGNOSTIC MENU
ENGINE
1 : DATA LIST
2 : DTC INFO
3 : ACTIVE TEST
4 : SNAPSHOT
5 : SYSTEM CHECK
6 : RESET MEMORY
8 : CHECK MODE
[ENTER]
RESET MEMORY
NOTICE
DO NOT USE THIS FUNCTION UNLESS INSTRUCTED BY REPAIR MANUAL
ONLY USE AFTER REPLACING THE ENGINE , AUTO TARNS, or ECM ON CERTAIN VEHICLES.
[AUTO]
RESET MEMORY
EXECUTING THIS FUNCTION WILL RESET THE LEARNED VALUES IN THE ECM.
DO YOU WISH TO RESET THE ECM ?
[YES] to CONTINUE
[NO] to EXIT
[YES]
RESET MEMORY
RESETTING COMPLETE
PRESS [ENTER]
P
G023367

AX

MONITOR DRIVE PATTERN

1. MONITOR DRIVE PATTERN FOR ECT TEST

(a) Perform this drive pattern as one method to simulate the detection conditions of the ECT malfunctions. (The DTCs may not be detected due the actual driving conditions. And some codes may not be detected through this drive pattern.)

HINT:

Preparation for driving

- Warm up the engine sufficiently. (Engine coolant temperature is 60°C (140°F) or higher)
- Drive the vehicle when the atmospheric temperature is -10°C (14°F) or higher. (Malfunction is not detected when the atmospheric temperature is less than -10°C (14°F))

Driving note

- Drive the vehicle through all gears. Stop → 1st → 2nd → 3rd → 4th → 5th → 5th (lock-up ON).
- Perform engine brake test in the S position. While driving in the 5(S) position and 5th gear lock-up, shift into the "-" position and down-shift from 5th to 4th, 4th to 3rd, 3rd to 2nd, 2nd to 1st. Check that the engine brake performs properly whenever down-shift takes place.
- Repeat the above driving pattern three times or more.

NOTICE:

- **The monitor status can be checked using the OBD II scan tool or intelligent tester. When using the intelligent tester, monitor status can be found in the "ENHANCED OBD II / DATA LIST" or under "CARB OBD II".**
- **In the event that the drive pattern must be interrupted (possibly due to traffic conditions or other factors), the drive pattern can be resumed and, in most cases, the monitor can be completed.**
- **Perform this drive pattern on a level road as much as possible and strictly observe the posted speed limits and traffic laws while driving.**

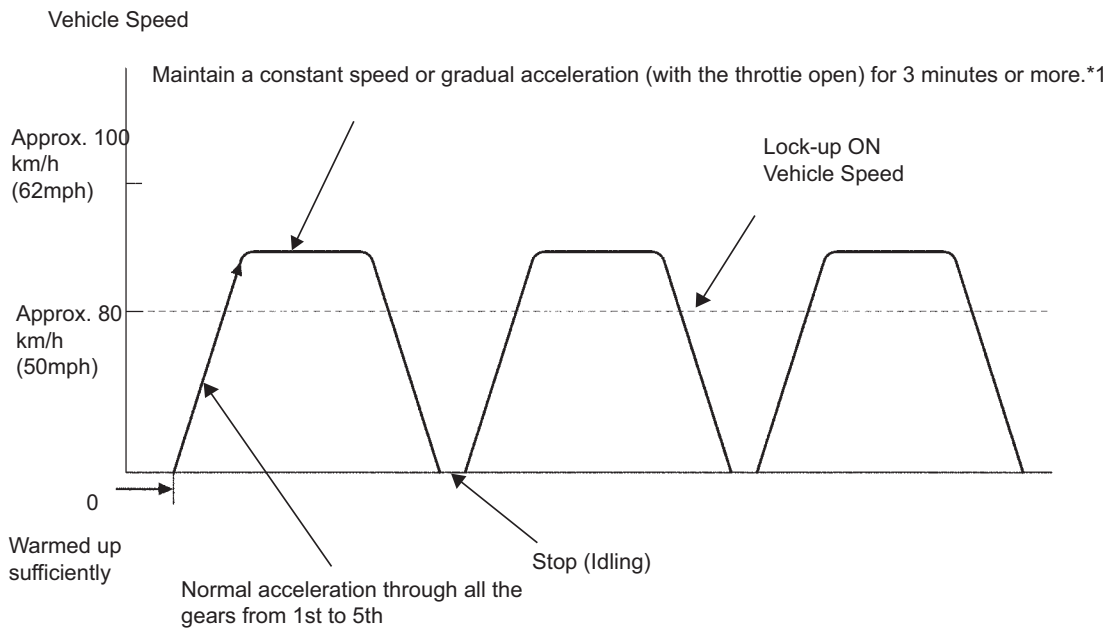

HINT:
*1: Drive at such a speed in the uppermost gear, to engage lock-up. The vehicle can be driven at a speed lower than that in the above diagram under the lock-up condition.

NOTICE:
If necessary to drive the vehicle for approximately 30 minutes to detect DTC P0711 (ATF temperature sensor malfunction).

AX

PROBLEM SYMPTOMS TABLE

HINT:

- If a normal code is displayed during the diagnostic trouble code check although the trouble still occurs, check the electrical circuits for each symptom in the order given in the charts on the following pages and proceed to the page given for troubleshooting.
- The Matrix Chart is divided into 2 chapters.
- When the circuit on which mark *1 is attached is a malfunction, DTC could be output.

Refer to the table below when the trouble cause is considered to be electrical the instruction "Proceed to next circuit inspection shown on matrix chart" is given in the flow chart of each circuit, proceed to the circuit with the next highest number in the table to continue the check. If the trouble still occurs even though there are no abnormalities in any of the other circuits, check and replace the ECM.

1. Chapter 1: Electronic Circuit Matrix Chart

Symptom	Suspected area	See page
No down-shift (A particular gear, from 1st to 4th gear, is not down-shifted)	ECM	IN-31
No down-shift (5th -> 4th)	1. Park/neutral position switch circuit *1	AX-36
	2. Shift solenoid valve (S4) circuit *1	AX-102
	3. ECM	IN-31
No up-shift (A particular gear, from 1st to 4th gear, is not up-shifted)	ECM	IN-31
No up-shift (4th -> 5th)	1. Park/neutral position switch circuit *1	AX-36
	2. Shift solenoid valve (S4) circuit *1	AX-102
	3. ECM	IN-31
No lock-up	1. Stop light switch circuit *1	AX-56
	2. Engine coolant temp. sensor circuit *1	ES-60
	3. ECM	IN-31
No lock-up off	ECM	IN-31
Shift point too high or too low	1. Throttle position sensor circuit *1	ES-60
	2. ECM	IN-31
Up-shift to 5th from 4th while engine is cold	1. Engine coolant temp. sensor circuit *1	ES-60
	2. ECM	IN-31
No gear change by shifting into "+" or "-" while the shifting lever is in the S position	1. Transmission control switch circuit	AX-115
	2. ECM	IN-31
Harsh engagement (N -> D)	1. Shift solenoid valve (SL1) circuit *1	AX-69
	2. ECM	IN-31
Harsh engagement (Lock-up)	ECM	IN-31
Harsh engagement (Any driving position)	ECM	IN-31
Poor acceleration	ECM	IN-31
No kick-down	ECM	IN-31
Engine stalls when starting off or stopping	ECM	IN-31
Malfunction in shifting	1. Park/neutral position switch circuit *1	AX-36
	2. Transmission control switch circuit	AX-115
	3. ECM	IN-31

2. Chapter 2: On-Vehicle Repair and Off-Vehicle Repair

Symptom	Suspected area	See page
Vehicle does not move in any forward position and in reverse positions	1. Valve body assembly	AX-136
	2. U/D brake (B3)	AX-182
	3. Torque converter clutch	AX-175
Vehicle does not move in R position	1. Valve body assembly	AX-136
	2. Reverse clutch (C2)	AX-182
	3. 1st and reverse brake (B2)	AX-182
No up-shift (1st -> 2nd)	1. Valve body assembly	AX-136
	2. 2nd and O/D brake (B1)	AX-182
No up-shift (2nd -> 3rd)	1. Valve body assembly	AX-136
	2. Direct and O/D clutch (C0)	AX-182
No up-shift (3rd -> 4th)	1. Valve body assembly	AX-136
	2. 2nd and O/D brake (B1)	AX-182
No up-shift (4th -> 5th)	1. Shift solenoid valve (S4)	AX-73
	2. Valve body assembly	AX-136
	3. U/D clutch (C3)	AX-182
No down-shift (5th -> 4th)	1. Shift solenoid (S4)	AX-73
	2. Valve body assembly	AX-136
No down-shift (4th -> 3rd)	Valve body assembly	AX-136
No down-shift (3rd -> 2nd)	Valve body assembly	AX-136
No down-shift (2nd -> 1st)	Valve body assembly	AX-136
No lock-up or No lock-up off	1. Shift solenoid valve (DSL)	AX-59
	2. Valve body assembly	AX-136
	3. Torque converter clutch	AX-175
Harsh engagement (N -> D)	1. Shift solenoid valve (SL1)	AX-65
	2. Valve body assembly	AX-136
	3. C1 accumulator	AX-182
	4. Forward clutch (C1)	AX-182
	5. One-way clutch No.1 (F1)	AX-182
	6. U/D one-way clutch (F2)	AX-182
Harsh engagement (Lock-up)	1.Shift solenoid valve (SL2)	AX-81
	2. Valve body assembly	AX-136
	3. Torque converter clutch	AX-175
Harsh engagement (N -> R)	1. Valve body assembly	AX-136
	2. C2 accumulator	AX-182
	3. Reverse clutch (C2)	AX-182
	4. 1st and reverse brake (B2)	AX-182
Harsh engagement (1st -> 2nd -> 3rd -> 4th -> 5th)	1. Shift solenoid valve (SLT)	AX-108
	2. Valve body assembly	AX-136
Harsh engagement (1st -> 2nd)	1. Valve body assembly	AX-136
	2. 2nd and O/D brake (B1)	AX-182
Harsh engagement (2nd -> 3rd)	1. Valve body assembly	AX-136
	2. C0 accumulator	AX-182
	3. Direct and O/D clutch (C0)	AX-182
Harsh engagement (3rd -> 4th)	1. Valve body assembly	AX-136
	2. 2nd and O/D brake (B1)	AX-182
Harsh engagement (4th -> 5th)	1. Valve body assembly	AX-136
	2. C3 accumulator	AX-182
	3. U/D clutch (B3)	AX-182

Symptom	Suspected area	See page
Harsh engagement (5th -> 4th)	1. Valve body assembly	AX-136
	2. B3 accumulator	AX-182
Slip or shudder (Forward and reverse: After warm-up)	1. Valve body assembly	AX-136
	2. Oil strainer	AX-136
	3. Direct and O/D clutch (C0)	AX-182
	4. Forward clutch (C1)	AX-182
	5. U/D clutch (C3)	AX-182
	6. 2nd and brake (B1)	AX-182
	7. U/D brake (B3)	AX-182
	8. One-way clutch No.1 (F1)	AX-182
	9. U/D one-way clutch (F2)	AX-182
	10. Torque converter clutch	AX-175
Slip or shudder (Particular position: Just after engine starts)	Torque converter clutch	AX-175
Slip or shudder (R position)	1. Reverse clutch (C2)	AX-182
	2. 1st and reverse brake (B2)	AX-182
Slip or shudder (1st)	1. Forward clutch (C1)	AX-182
	2. One-way clutch No.1 (F1)	AX-182
	3. U/D one-way clutch (F2)	AX-182
Slip or shudder (2nd)	2nd and O/D brake (B1)	AX-182
Slip or shudder (3rd)	Direct and O/D clutch (C0)	AX-182
Slip or shudder (4th)	2nd and O/D brake (B1)	AX-182
Slip or shudder (5th)	U/D clutch (C3)	AX-182
Shift position too high or too low	Shift solenoid valve (SLT)	AX-108
No engine braking (1st +- 4th: D position)	U/D brake (B3)	AX-182
No engine braking (1st: L (1) position)	1. Valve body assembly	AX-136
	2. 1st and reverse brake (B2)	AX-182
No engine braking (2nd: 2 position)	1. Valve body assembly	AX-136
	2. 2nd and O/D brake (B1)	AX-182
No engine braking (3rd: 3 position)	U/D brake (B3)	AX-182
No kick-down	Valve body assembly	AX-136
Poor acceleration (All positions)	1. Shift solenoid valve (SLT)	AX-108
	2. Torque converter clutch	AX-175
Poor acceleration (5th)	1. U/D clutch (C3)	AX-182
	2. U/D planetary gear unit	AX-182
Engine stalls when starting off or stopping	1. Shift solenoid valve DSL)	AX-59
	2. Torque converter clutch	AX-175

TERMINALS OF ECM

1. ECM

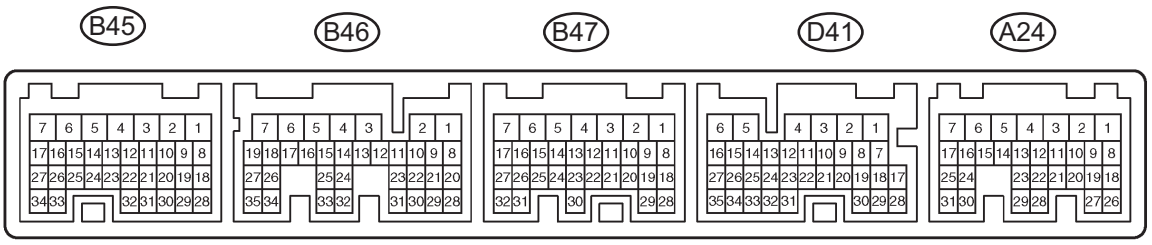

HINT:
Each ECM terminal's standard voltage is shown in the table below.
In the table, first follow the information under "Condition". Look under "Symbols (Terminal No.)" for the terminals to inspected. The standard voltage between the terminals is shown under "Specific Condition".
Use the illustration above as a reference for the ECM terminals.
*1: w/ Smart Key System
*2: w/o Smart Key System

Symbols (Terminals No.)	Wiring Color	Terminal Description	Condition	Specified Condition
D (D41-21) - E1 (B47-1)	W - BR	D shift position switch signal	Ignition switch on (IG) and shift lever D and S position	10 to 14 V
↑	↑	↑	Ignition switch on (IG) and shift lever except D and S position	Below 1 V
R (D41-11) - E1 (B47-1)	P - BR	R shift position switch signal	Ignition switch on (IG) and shift lever R position	10 to 14 V
↑	↑	↑	Ignition switch on (IG) and shift lever except R position	Below 1 V
SPD (D41-8) - E1 (B47-1)	GR - BR	Speed signal	Vehicle speed 20 km/h (12mph)	Pulse generation (See waveform 8)
STP (A24-15) - E1 (B47-1)	W - BR	Stop light switch signal	Brake pedal is depressed	7.5 to 14 V
↑	↑	↑	Brake pedal is released	Below 1.5 V
SFTD (D41-5) - E1 (B47-1)	W - BR	Down shift switch signal	Ignition switch on (IG) and shift lever S position	10 to 14 V
↑	↑	↑	Ignition switch on (IG) and shift lever "-" position (Down shift)	Below 1 V
SFTU (D41-6) - E1 (B47-1)	R - BR	Up shift switch signal	Ignition switch on (IG) and shift lever S position	10 to 14 V
↑	↑	↑	Ignition switch on (IG) and shift lever "+" position (Up shift)	Below 1 V
S (D41-20) - E1 (B47-1)	L - BR	S shift position switch signal	Ignition switch on (IG) and shift lever S position	10 to 14 V
↑	↑	↑	Ignition switch on (IG) and shift lever except S position	Below 1 V
P (D41-23) - E1 (B47-1)	G-W - BR	Park position switch signal	Ignition switch on (IG) and shift lever P position	10 to 14 V
↑	↑	↑	Ignition switch on (IG) and shift lever except P position	Below 1 V

Symbols (Terminals No.)	Wiring Color	Terminal Description	Condition	Specified Condition
N (D41-22) - E1 (B47-1)	O - BR	Neutral position switch signal	Ignition switch on (IG) and shift lever N position	10 to 14 V
↑	↑	↑	Ignition switch on (IG) and shift lever except N position	Below 1 V
STAR (B46-8) - E1 (B47-1)	B-W*1 - BR W-R*2 - BR	Park neutral switch signal	Ignition switch on (IG) and shift lever P and N position	Below 1 V
↑	↑	↑	Ignition switch on (IG) and shift lever except P and N position	10 to 14 V
DSL (B46-11) - E1 (B47-1)	G-R - BR	DSL solenoid signal	Vehicle speed 65 km/h (40mph), lock-up (ON to OFF)	Pulse generation (See waveform 2)
SR (B46-9) - E1 (B47-1)	L-B - BR	SR solenoid signal	Ignition switch on (IG)	Below 1 V
↑	↑	↑	3rd, 4th or 5th gear	10 to 14 V
↑	↑	↑	1st or 2nd gear	Below 1 V
S4 (B46-10) - E1 (B47-1)	W-L - BR	S4 solenoid signal	Ignition switch on (IG)	Below 1 V
↑	↑	↑	5th gear	10 to 14 V
↑	↑	↑	Except 5th gear	Below 1 V
SL3+ (B46-17) - SL3- (B46-16)	W - B-W	SL3 solenoid signal	Engine idle speed	Pulse generation (See waveform 3)
SL2+ (B46-15) - SL2- (B46-14)	Y - L	SL2 solenoid signal	Engine idle speed	Pulse generation (See waveform 4)
SL1+ (B46-19) - SL1- (B46-18)	G - P	SL1 solenoid signal	Engine idle speed	Pulse generation (See waveform 5)
NC+ (B46-34) - NC- (B46-26)	L-B - G-R	Speed sensor (NC) signal	Vehicle speed 30 km/h (19mph): (3rd gear) Engine speed 1,400 rpm	Pulse generation (See waveform 6)
NT+ (B46-35) - NT- (B46-27)	W-L - L	Speed sensor (NT) signal	Vehicle speed 20 km/h (12mph)	Pulse generation (See waveform 7)
SLT+ (B46-13) - SLT- (B46-12)	R - G	SLT solenoid signal	Engine idle speed	Pulse generation (See waveform 1)
THO1 (B46-24) - E2 (B45-28)	W-R - W	ATF temperature sensor signal	ATF temperature: 115°C (239°F) or more	Below 1.5 V

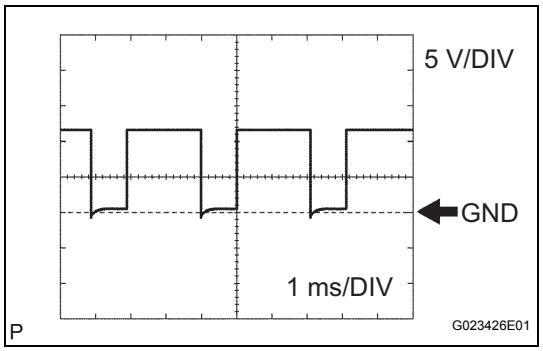

(a) Waveform 1

Reference:

Terminal	SLT+ - SLT-
Tool setting	5 V/DIV, 1ms/DIV
Vehicle condition	Engine idle speed

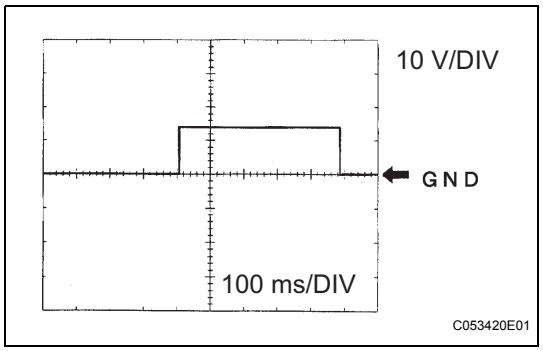

(b) Waveform 2

Reference:

Terminal	DSL - E1
Tool setting	10 V/DIV, 100ms/DIV
Vehicle condition	Vehicle speed 65 km/h (40 mph), lock-up (ON to OFF)

AX

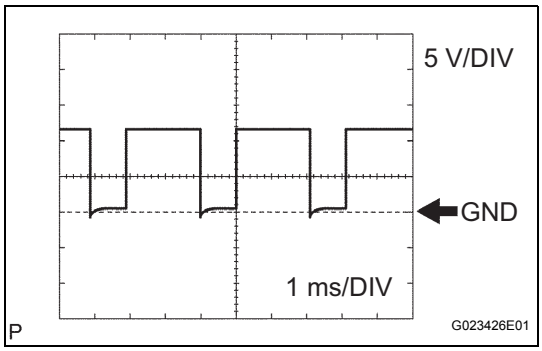

(c) Waveform 3
Reference:

Terminal	SL3+ - SL3-
Tool setting	5 V/DIV, 1ms/DIV
Vehicle condition	Engine idle speed

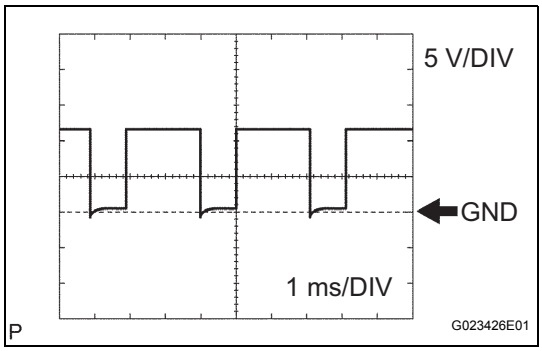

(d) Waveform 4
Reference:

Terminal	SL2+ - SL2-
Tool setting	5 V/DIV, 1ms/DIV
Vehicle condition	Engine idle speed

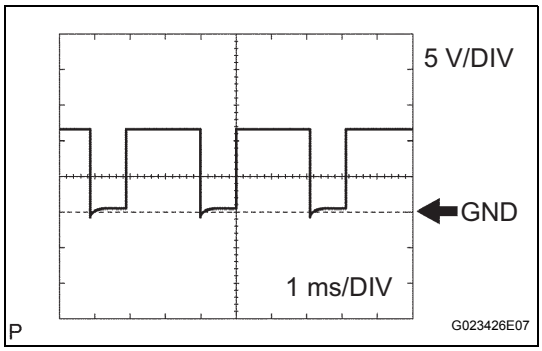

(e) Waveform 5
Reference:

Terminal	SL1+ - SL1-
Tool setting	5 V/DIV, 1ms/DIV
Vehicle condition	Engine idle speed

AX

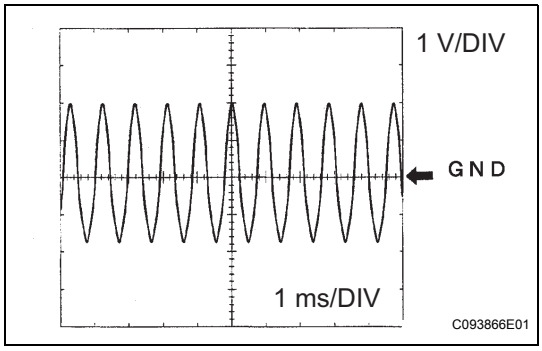

(f) Waveform 6
Reference:

Terminal	NC+ - NC-
Tool setting	1 V/DIV, 1ms/DIV
Vehicle condition	Vehicle speed 30 km/h (19 mph): (3rd gear) Engine speed 1.400 rpm

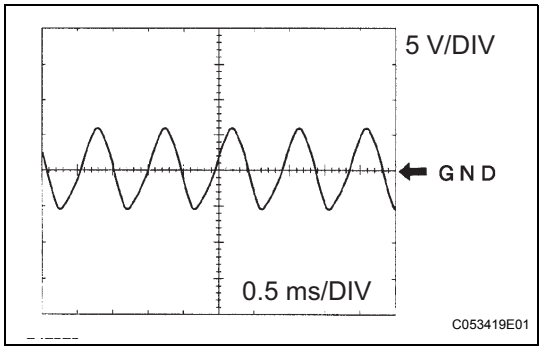

(g) Waveform 7
Reference:

Terminal	NT+ - NT-
Tool setting	5 V/DIV, 0.5ms/DIV
Vehicle condition	Vehicle speed 20 km/h (12 mph)

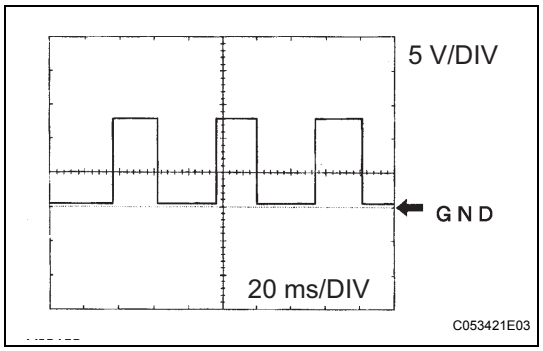

(h) Waveform 8
Reference:

Terminal	SPD - E1
Tool setting	5 V/DIV, 20ms/DIV
Vehicle condition	Vehicle speed 20 km/h (12 mph)

HINT:
Depending on the vehicle, the output waveform voltage, influenced by optionally installed systems, may become 5V.

DIAGNOSIS SYSTEM

1. DESCRIPTION

(a) When troubleshooting OBD II vehicles, the only difference from the usual troubleshooting procedure is to connect an OBD II scan tool complying with SAE J1987 or a intelligent tester to the vehicle, and read off various data output from the vehicle's ECM.

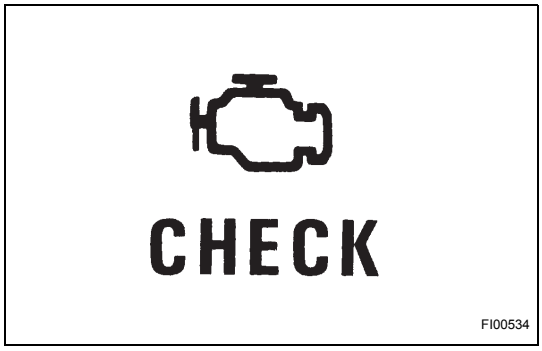

(b) OBD II regulations require that the vehicle's on-board computer illuminate the Malfunction Indicator Lamp (MIL) on the instrument panel when the computer detects a malfunction in the computer itself or in the drive system components which affect the vehicle emissions. In addition to illuminating the MIL when a malfunction is detected, the applicable DTCs prescribed by SAE J2012 are recorded in the ECM memory (See page AX-32).
If the malfunction does not occur in 3 consecutive trips, the MIL goes off but the DTCs remain in the ECM memory.

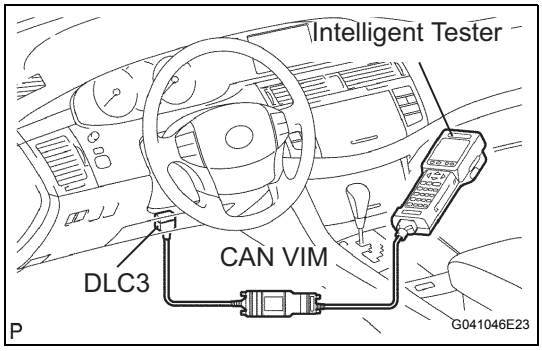

(c) To check the DTCs, connect the OBD II scan tool or intelligent tester to the DLC3 of the vehicle. The OBD II scan tool or intelligent tester also enables you to erase the DTCs and check freeze frame data and various forms of engine data (For operating instructions, see the instruction book).

(d) The DTCs include SAE controlled codes and Manufacturer controlled codes. SAE controlled codes must be set as prescribed by the SAE, while Manufacturer controlled codes can be set freely by a manufacturer within the prescribed limits (See page AX-32).

(e) The diagnosis system operates in "normal mode" during the normal vehicle use. In normal mode, "2-trip detection logic" is used to ensure accurate detection of malfunction. "Check mode" is also available to technicians as an option. In check mode, "1-trip detection logic" is used for simulating malfunction symptoms and increasing the system's ability to detect malfunctions, including intermittent malfunction.

(f) *2 trip detection logic: When a malfunction is first detected, the malfunction is temporarily stored in the ECM memory (1st trip). IF the ignition switch is turned off and then turned on (IG) again, and same malfunction is detected again, the MIL will illuminate.

(g) The ECM records vehicle and driving condition information as freeze frame data the moment a DTC is stored. When troubleshooting, freeze frame data can be helpful in determining whether the vehicle was running or stopped, whether the engine was warmed up or not, whether the air/fuel ratio was lean or rich, as well as other data recorded at the time of a malfunction.

(h) The intelligent tester displays freeze frame data recorded at five different points: 1) 3 times before the DTC is set, 2) once when the DTC is set, and 3) once after the DTC is set. The data can be used to simulate the vehicle's condition around the time of the malfunction. The data may be helpful in determining the cause of a malfunction. It may also be helpful in determining whether a DTC is being caused by a temporary malfunction.

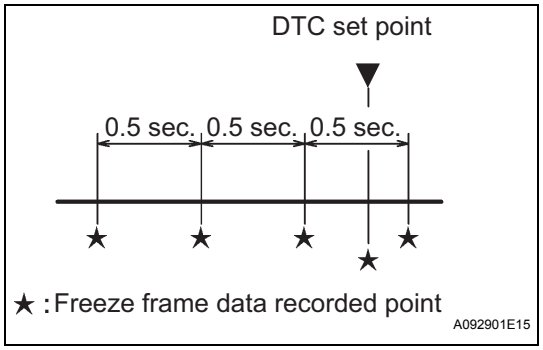

2. INSPECT THE DLC3

(a) The vehicle's ECM uses ISO 15765-4for communication. The terminal arrangement of the DLC3 complies with SAE J1962 and matches the ISO 15765-14format.

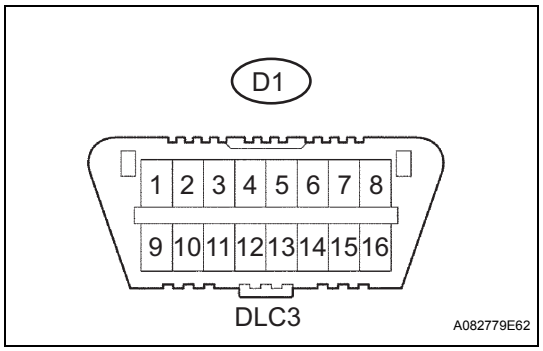

Terminals of DLC 3

Symbol	Terminal No.	Name	Reference Terminal	Result	Condition
SIL	7	Bus "+" line	5 - Signal ground	Pulse generation	During transmission
CG	4	Chassis ground	Body ground	Below 1 Ω	Always
SG	5	Signal ground	Body ground	Below 1 Ω	Always
BAT	16	Battery positive	Body ground	11 to 14 V	Always
CANH	6	HIGH-level CAN bus line	CANL	54 to 69 Ω	IG switch OFF
CANH	6	HIGH-level CAN bus line	Battery positive	1 MΩ or higher	IG switch OFF
CANH	6	HIGH-level CAN bus lineCG	CG	1 kΩ or higher	IG switch OFF
CANL	14	LOW-level CAN bus line	Battery positive	1 MΩ or higher	IG switch OFF
CANL	14	LOW-level CAN bus line	CG	1 kΩ or higher	IG switch OFF

HINT:
If your display shows UNABLE TO CONNECT TO VEHICLE when you have connected the cable of the OBD II scan tool or intelligent tester to the DLC3, turned the ignition switch on (IG) and operated the scan tool, there is a problem on the vehicle side or tool side.

AX

- If the communication is normal when the tool is connected to another vehicle, inspect the DLC3 on the original vehicle.
- If the communication is still impossible when the tool is connected to another vehicle, the problem is probably in the tool itself, so consult the Service Department listed in the tool's instruction manual.

3. CHECK BATTERY VOLTAGE

(a) Measure the battery voltage.

Battery voltage:
11 to 14 V

If voltage is below 11 V, replace the battery before proceeding.

4. CHECK MIL

(a) Check that the MIL illuminates when turning the ignition switch on (IG).

HINT:
If the MIL does not light up, troubleshoot the combination meter.

(b) When the engine is started, the MIL should go off. If the lamp remains on, it means that the diagnosis system has detected a malfunction or abnormality in the system.

DTC CHECK / CLEAR

1. DTC CHECK (NORMAL MODE)

NOTICE:

When the diagnostic system is switched from the normal mode to the check mode, all the DTCs and freeze frame data recorded in the normal mode will be erased. So before switching modes, always check the DTCs and freeze frame data, and note them down.

DTCs which are stored in the ECM can be displayed with the intelligent tester or generic OBD II scan tool. These scan tools can display pending DTCs and current DTCs. Some DTC aren't stored if the ECM doesn't detect a malfunction during consecutive driving. However, the detected malfunction during once driving is stored as pending DTC.

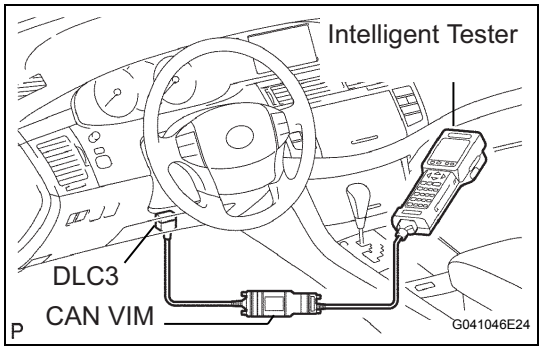

(a) Checking DTCs using the OBD II scan tool or intelligent tester.
  (1) Connect the intelligent tester to the Controller Area Network Vehicle Interface Module (CAN VIM). Then connect the CAN VIM to the Data Link Connector 3 (DLC3).
  (2) Turn the ignition switch on (IG).
  (3) Enter the following menus: DIAGNOSIS / ENHANCED OBD II / DTC INFO / CURRENT CODES (or PENDING CODE).
  (4) Use the OBD II scan tool or intelligent tester to check the DTCs and freeze frame data and note them down (For operating instructions, see the OBD II scan tool's instruction book).

  NOTICE:

  When simulating symptoms with an OBD II scan tool (excluding intelligent tester) to check the DTCs, use the normal mode. For codes on the DTCs chart which are subject to "2 trip detection logic",

  Turn the engine switch off after the symptom is simulated once. Then repeat the simulation process again. When the problem has been simulated twice, the MIL illuminates and the DTCs are recorded in the ECM.

2. DTC CLEAR

(a) Connect the intelligent tester to the CAN VIM. Then connect the CAN VIM to the DLC3.
(b) Turn the ignition switch on (IG).
(c) Enter the following menus: DIAGNOSIS / ENHANCED OBD II / DTC INFO / CLEAR CODES and press YES.

AX

CHECK MODE PROCEDURE

HINT:
Check mode has a higher sensitivity to malfunctions and can detect malfunction that normal mode cannot detect. Check mode can also detect all the malfunctions that normal mode can detect. In check mode, DTCs are detected with 1-trip detection logic.

1. DTC CHECK (CHECK MODE)

HINT:
Intelligent tester only: Compared to the normal mode, the check mode is more sensitive for detecting malfunctions. Furthermore, the same diagnostic items which are detected in the normal mode can also be detected in the check mode.

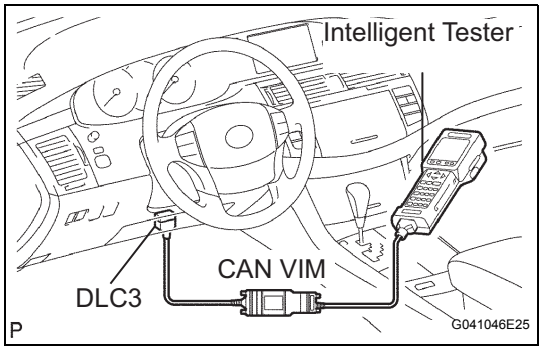

(a) Procedure for Check Mode using the intelligent tester.

(1) Check the initial conditions.
- Battery positive voltage 11 V or more
- Throttle valve fully closed
- Transaxle in the P or N position
- A/C switch is off

(2) Turn the ignition switch off.

(3) Connect the intelligent tester together with the Controller Area Network Vehicle Interface Module (CAN VIM) to the DLC3.

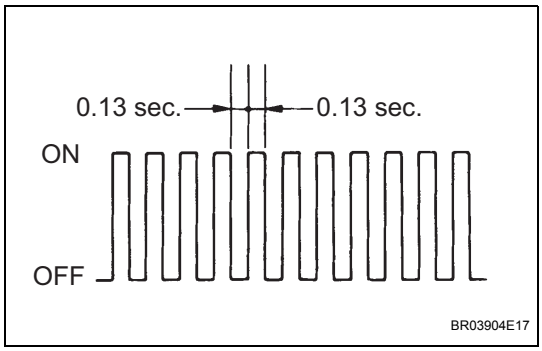

(4) Turn the ignition switch on (IG) and turn the intelligent tester main switch on.

(5) Select the item "DIAGNOSIS/ENHANCED OBD II/CHECK MODE" (Check that the MIL flashes).
NOTICE:
All DTCs and freeze frame data recorded will be erased if: 1) the intelligent tester is used to change the ECM from normal mode to check mode or vice-versa; or 2) during check mode, the ignition switch is turned from the on (IG) to ACC position or turned OFF.

(6) Start the engine (the MIL goes off after the engine starts).

(7) Perform "MONITOR DRIVE PATTERN" for the ECT test (See page AX-16). (Or, simulate the conditions of the malfunction described by the customer).
NOTICE:
Leave the ignition switch on (IG) until you have checked the DTCs, etc.

(8) After simulating malfunction conditions, use the intelligent tester diagnosis selector to check the DTCs and freeze frame data, etc.

(9) When you use intelligent tester: Select the item "DIAGNOSIS / ENHANCED OBD II / DTC INFO / CURRENT CODES".

(10) After checking the DTC, inspect the applicable circuit.

AX

(11)(See page AX-32) to confirm the details of the DTCs.

2. DTC CLEAR

(a) Connect the intelligent tester to the CAN VIM. Then connect the CAN VIM to the DLC3.

(b) Turn the ignition switch on (IG).

(c) Enter the following menus: DIAGNOSIS / ENHANCED OBD II / DTC INFO / CLEAR CODES and press YES.

FAIL-SAFE CHART

1. FAIL-SAFE

This function minimizes the loss of the ECT functions when any malfunction occurs in a sensor or solenoid.

(a) ATF (Automatic Transmission Fluid) temperature sensor:
When the ATF temperature sensor has a malfunction, 5th upshift is prohibited.

(b) Counter gear speed sensor NC (Speed sensor NC):
When the counter gear speed sensor has a malfunction, 5th upshift is prohibited.

(c) Shift solenoid valve DSL:
When the solenoid valve DSL has a malfunction, the current to the solenoid valve is stopped.
This stops lock-up control, then fuel economy decreases.

(d) Shift solenoid valve SL1, SL2, SL3 and S4:
Fail safe function:
If either of the shift solenoid valve circuits develops an open or short, the ECM turns the other shift solenoid "ON" and "OFF" in order to shift into the gear positions shown in the table below.
Manual shifting as shown in the following table must be done (In case of a short circuit, the ECM stops sending the current to the short circuited solenoid).
Even if starting the engine in the fail-safe mode, the gear position remains in the same position.
HINT:
FL: Flex Lock-up

Normal	Solenoid Valve	SL1	ON	OFF	ON	OFF	OFF
		SL2	ON	ON	OFF	FL	FL
		SL3	OFF	OFF	OFF	ON	ON
		S4	OFF	OFF	OFF	OFF	ON
	Gear Position		1st	2nd	3rd	4th	5th
SL1 Malfunction (During driving at 1st or 2nd)	Solenoid Valve	SL1	OFF				
		SL2	ON	ON	OFF to ON	FL to ON	FL to ON
		SL3	OFF	OFF	OFF	ON to OFF	ON to OFF
		S4	OFF	OFF	OFF	OFF	ON to OFF
	Gear Position		1st to 2nd	2nd	3rd to 2nd	4th to 2nd	5th to 2nd
SL1 Malfunction (During driving at 3rd)	Solenoid Valve	SL1	OFF				
		SL2	ON to FL	ON to FL	OFF to FL	FL	FL
		SL3	OFF	OFF	OFF	ON to FL	ON to FL
		S4	OFF to ON	OFF to ON	OFF to ON	OFF to ON	ON
	Gear Position		1st to 4th	2nd to 4th	3rd to 4th	4th	5th to 4th
SL1 Malfunction (During driving at 4th or 5th)	Solenoid Valve	SL1	OFF				
		SL2	ON to FL	ON to FL	OFF to FL	FL	FL
		SL3	OFF to ON	OFF to ON	OFF to ON	ON	ON
		S4	OFF	OFF	OFF	OFF	ON
	Gear Position		1st to 4th	2nd to 4th	3rd to 4th	4th	5th to 4th

SL2 Malfunction	Solenoid Valve	SL1	ON	OFF to ON	ON	OFF to ON	OFF to ON
		SL2	OFF				
		SL3	OFF	OFF	OFF	ON to OFF	ON to OFF
		S4	OFF to ON	OFF to ON	OFF to ON	OFF to ON	ON
	Gear Position		1st to 4th	2nd to 4th	3rd to 4th	4th	5th to 4th
SL3 Malfunction	Solenoid Valve	SL1	ON	OFF	ON	OFF to ON	OFF to ON
		SL2	ON	ON	OFF	FL	FL
		SL3	OFF				
		S4	OFF	OFF	OFF	OFF to ON	ON
	Gear Position		1st	2nd	3rd	4th	5th to 4th
S4 Malfunction	Solenoid Valve	SL1	ON	OFF	ON	OFF	OFF
		SL2	ON	ON	OFF	FL	FL
		SL3	OFF	OFF	OFF	ON	ON
		S4	OFF				
	Gear Position		1st	2nd	3rd	4th	5th to 4th
SL1, SL2, SL3, and S4 Malfunction	Solenoid Valve	SL1	OFF				
		SL2	OFF				
		SL3	OFF				
		S4	OFF				
	Gear Position		1st to 4th	2nd to 4th	3rd to 4th	4th	5th to 4th

AX

DATA LIST / ACTIVE TEST

1. DATA LIST

HINT:

According to the DATA LIST displayed by the intelligent tester, you can read the value of the switch, sensor, actuator and so on without parts removal. Reading the DATA LIST as the first step of troubleshooting is one method to shorten labor time.

NOTICE:

In the table below, the values listed under "Normal Condition" are reference values. Do not depend solely on these reference values when deciding whether a part is faulty or not.

(a) Warm up the engine.

(b) Turn the ignition switch off.

(c) Connect the intelligent tester together with the CAN VIM (controller area network vehicle interface module) to the DLC3.

(d) Turn the ignition switch to the on position.

(e) Turn on the tester.

(f) Select the item "DIAGNOSIS / ENHANCED OBD II / DATA LIST".

(g) According to the display on the tester, read the "DATA LIST".

Item	Measurement Item/ Range (display)	Normal Condition	Diagnostic Note
STOP LIGHT SW	Stop light switch Status/ ON or OFF	• Brake Pedal is depressed: ON • Brake Pedal is released: OFF	-
PNP SW [NSW]	PNP switch Status/ ON or OFF	Shift lever position is; P and N: ON Except P and N: OFF	When the shift lever position displayed on the Intelligent tester differs from the actual position, adjustment of the PNP switch or the shift cable may be incorrect. HINT: When the failure still occurs even after adjusting these parts, See page AX-36.
REVERSE	PNP switch Status/ ON or OFF	Shift lever position is; R: ON Except R: OFF	↑
DRIVE	PNP switch Status/ ON or OFF	Shift lever position is; D and S : ON Except D and S: OFF	↑
SHIFT	Actual Gear Position/ 1st, 2nd, 3rd, 4th or 5th	Shift Lever Position is; • D: 1st, 2nd, 3rd, 4th or 5th • S: 1st, 2nd, 3rd, 4th or 5th	-
LOCK UP SOL	Lock Up Solenoid Status/ ON or OFF	• Lock Up: ON • Except Lock Up: OFF	-
SOLENOID (SLT)	Shift Solenoid SLT Status/ ON or OFF	• Accelerator pedal is depressed: OFF • Accelerator pedal is released: ON	-
AT FLUID TEMP	ATF Temp. Sensor Value/ min.: -40°C (-40°F) max.: 215°C (419°F)	• After Stall Test; Approx. 80°C (176°F) • Equal to ambient temperature when cold soak	If the value is "-40°C (-40°F)" or "215°C (419°F)", ATF temp. sensor circuit is opened or shorted.

Item	Measurement Item/ Range (display)	Normal Condition	Diagnostic Note
SPD (NC)	Counter Gear Speed/ display: 50 r/min	HINT: 3rd when shift lever position is D position (After warming up the engine); • Intermediate shaft speed (NC) becomes close to the engine speed.	-

2. ACTIVE TEST

HINT:

Performing the ACTIVE TEST using the intelligent tester allows the relay, VSV, actuator and so on to operate without parts removal. Performing the ACTIVE TEST as the first step of troubleshooting is one method to shorten labor time.

It is possible to display the DATA LIST during the ACTIVE TEST.

(a) Warm up the engine.
(b) Turn the ignition switch off.
(c) Connect the intelligent tester together with the CAN VIM (controller area network vehicle interface module) to the DLC3.
(d) Turn the ignition switch to the ON position.
(e) Push the "ON" button of the intelligent tester.
(f) Select the item "DIAGNOSIS / ENHANCED OBD II / ACTIVE TEST".
(g) According to the display on tester, perform the "ACTIVE TEST".

Item	Test Details	Diagnostic Note
SHIFT	[Test Details] Operate the shift solenoid valve and set the each shift position by yourself. [Vehicle Condition] • IDL: ON • Less than 50 km/h (31 mph) [Others] • Press "→" button: Shift up • Press "←" button: Shift down	Possible to check the operation of the shift solenoid valves.
LOCK UP	[Test Details] Control the shift solenoid DSL to set the automatic transaxle to the lock-up condition. [Vehicle Condition] • Vehicle Speed: 60 km/h (37 mph) or more, and 6th gear	Possible to check the DSL operation.
LINE PRESS UP *	[Test Details] Operate the shift solenoid SLT and raise the line pressure. [Vehicle Condition] • Vehicle Stopped. • IDL: ON HINT: OFF: Line pressure up (When the active test of "LINE PRESS UP" is performed, the ECM commands the SLT solenoid to turn off). ON: No action (normal operation)	-

AX

*: "LINE PRESS UP" in the ACTIVE TEST is performed to check the line pressure changes by connecting the SST to the automatic transaxle, which is used in the HYDRAULIC TEST (See page AX-13) as well.
HINT:
The pressure values in ACTIVE TEST and HYDRAULIC TEST are different from each other.

DIAGNOSTIC TROUBLE CODE CHART

If a DTC is displayed during the DTC check, check the parts listed in the table below and proceed to the page given.
HINT:

- *1: Comes on MIL (Malfunction Indicator Lamp) light up
- *2: "DTC stored" mark means ECM memorizes the malfunction code if the ECM detects the DTC detection condition.
- This DTC may be output when the clutch, brake and gear components etc. inside the automatic transmission are damaged.

AUTOMATIC TRANSMISSION SYSTEM

DTC No.	Detection Item	Trouble Area	MIL *1	Memory *2	See page
P0705	Transmission Range Sensor Circuit Malfunction (PRNDL Input)	1. Open or short in park/neutral position switch circuit 2. Park/neutral position switch 3. ECM	Comes on	DTC stored	AX-36
P0710	Transmission Fluid Temperature Sensor "A" Circuit	1. Open or short in ATF temperature sensor circuit 2. Transmission wire (ATF temperature sensor) 3. ECM	Comes on	DTC stored	AX-44
P0711	Transmission Fluid Temperature Sensor "A" Performance	1. Transmission wire (ATF temperature sensor)	Comes on	DTC stored	AX-49
P0712	Transmission Fluid Temperature Sensor "A" Circuit Low Input	1. Short in ATF temperature sensor circuit 2. Transmission wire (ATF temperature sensor) 3. ECM	Comes on	DTC stored	AX-44
P0713	Transmission Fluid Temperature Sensor "A" Circuit High Input	1. Open in ATF temperature sensor circuit 2. Transmission wire (ATF temperature sensor) 3. ECM	Comes on	DTC stored	AX-44
P0717	Turbine Speed Sensor Circuit No Signal	1. Open or short in transmission revolution sensor NT (speed sensor NT) circuit 2. Transmission revolution sensor NT (speed sensor NT) 3. ECM 4. Automatic transaxle assembly	Comes on	DTC stored	AX-53
P0724	Brake Switch "B" Circuit High	1. Short in stop light switch circuit 2. Stop light switch 3. ECM	Comes on	DTC stored	AX-56

DTC No.	Detection Item	Trouble Area	MIL *1	Memory *2	See page
P0741	Torque Converter Clutch Solenoid Performance (Shift Solenoid Valve DSL)	1. Shift solenoid valve DSL remains open or closed 2. Valve body is blocked 3. Torque converter clutch 4. Automatic transaxle (clutch, brake or gear etc.) 5. Line pressure is too low	Comes on	DTC stored	AX-59
P0746	Pressure Control Solenoid "A" Performance (Shift Solenoid Valve SL1)	1. Shift solenoid valve SL1 remains open or closed 2. Valve body is blocked 3. Automatic transaxle (clutch, brake or gear etc.)	Comes on	DTC stored	AX-65
P0748	Pressure Control Solenoid "A" Electrical (Shift Solenoid Valve SL1)	1. Open or short in shift solenoid valve SL1 circuit 2. Shift solenoid valve SL1 3. ECM	Comes on	DTC stored	AX-69
P0766	Shift Solenoid "D" Performance (Shift Solenoid Valve S4)	1. Shift solenoid valve S4 remains open or closed 2. Valve body is blocked (Brake control valve) 3. Automatic transmission (clutch, brake or gear, etc.)	Comes on	DTC stored	AX-73
P0771	Shift Solenoid "E" Performance (Shift Solenoid Valve SR)	1. Shift solenoid valve SR remains open or closed 2. Valve body is blocked 3. Automatic transaxle (clutch, brake or gear etc.)	Comes on	DTC stored	AX-77
P0776	Pressure Control Solenoid "B" Performance (Shift Solenoid Valve SL2)	1. Shift solenoid valve SL2 remains open or closed 2. Valve body is blocked 3. Automatic transaxle (clutch, brake or gear etc.)	Comes on	DTC stored	AX-81
P0778	Pressure Control Solenoid "B" Electrical (Shift Solenoid Valve SL2)	1. Open or short in shift solenoid valve SL2 circuit 2. Shift solenoid valve SL2 3. ECM	Comes on	DTC stored	AX-86
P0793	Intermediate Shaft Speed Sensor "A"	1. Open or short in transmission revolution sensor NC (speed sensor NC) circuit 2. Transmission revolution sensor NC (speed sensor NC) 3. ECM	Comes on	DTC stored	AX-90

DTC No.	Detection Item	Trouble Area	MIL *1	Memory *2	See page
P0796	Pressure Control Solenoid "C" Performance (Shift Solenoid Valve SL3)	1. Shift solenoid valve SL3 remains open or closed 2. Valve body is blocked 3. Automatic transaxle (clutch, brake or gear etc.)	Comes on	DTC stored	AX-94
P0798	Pressure Control Solenoid "C" Electrical (Shift Solenoid Valve SL3)	1. Open or short in shift solenoid valve SL3 circuit 2. Shift solenoid valve SL3 3. ECM	Comes on	DTC stored	AX-98
P0982	Shift Solenoid "D" Control Circuit Low (Shift Solenoid Valve S4)	1. Short in shift solenoid valve S4 circuit 2. Shift solenoid valve S4 3. ECM	Comes on	DTC stored	AX-102
P0983	Shift Solenoid "D" Control Circuit High (Shift Solenoid Valve S4)	1. Open in shift solenoid valve S4 circuit 2. Shift solenoid valve S4 3. ECM	Comes on	DTC stored	AX-102
P0985	Shift Solenoid "E" Control Circuit Low (Shift Solenoid Valve SR)	1. Short in shift solenoid valve SR circuit 2. Shift solenoid valve SR 3. ECM	Comes on	DTC stored	AX-105
P0986	Shift Solenoid "E" Control Circuit High (Shift Solenoid Valve SR)	1. Open in shift solenoid valve SR circuit 2. Shift solenoid valve SR 3. ECM	Comes on	DTC stored	AX-105
P2716	Pressure Control Solenoid "D" Electrical (Shift Solenoid Valve SLT)	1. Open or short in shift solenoid valve SLT circuit 2. Shift solenoid valve SLT 3. ECM	Comes on	DTC stored	AX-108
P2769	Torque Converter Clutch Solenoid Circuit Low (Shift Solenoid Valve DSL)	1. Short in shift solenoid valve DSL circuit 2. Shift solenoid valve DSL 3. ECM	Comes on	DTC stored	AX-112
P2770	Torque Converter Clutch Solenoid Circuit High (Shift Solenoid Valve DSL)	1. Open in shift solenoid valve DSL circuit 2. Shift solenoid valve DSL 3. ECM	Comes on	DTC stored	AX-112

DTC	P0705	Transmission Range Sensor Circuit Malfunction (PRNDL Input)

DESCRIPTION

The park/neutral position switch detects the shift lever position and sends signals to the ECM.

DTC No.	DTC Detection Condition	Trouble Area
P0705	(A) Any 2 or more signals of the following are ON simultaneously (2-trip detection logic) • P input signal is ON. • N input signal is ON. • R input signal is ON. • D input signal is ON. (B) Any 2 or more signals of the following are ON simultaneously (2-trip detection logic) • STAR input signal is ON. • R input signal is ON. • D input signal is ON. (C) When any of following conditions is for 2.0sec. or more in the S position (2-trip detection logic). • STAR input signal is ON. • P input signal is ON. • N input signal is ON. • R input signal is ON.	• Short in park/neutral position switch circuit • Park/neutral position switch • ECM

MONITOR DESCRIPTION

These DTCs indicate a problem with the park/neutral position switch and the wire harness in the park/neutral position switch circuit.
The park/neutral position switch detects the shift lever position and sends a signal to the ECM.
For security, the park/neutral position switch detects the shift lever position so that engine can be started only when the shift lever is in the P or N position
The park/neutral position switch sends a signal to the ECM according to the shift position (P, R, N or D).
The ECM determines that there is a problem with the switch or related parts if in receives more than 1 position signal simultaneously. The ECM will turn on the MIL and store the DTC.

AX

MONITOR STRATEGY

Related DTCs	P0705: Park/neutral position switch/Verify switch input
Required sensors/Components	Park/neutral position switch
Frequency of operation	Continuous
Duration	2 sec.
MIL operation	2 driving cycles
Sequence of operation	None

TYPICAL ENABLING CONDITIONS

All:

The monitor will run whenever this DTC is not present.	None
Ignition switch	ON
Battery voltage	10.5 V or more

TYPICAL MALFUNCTION THRESHOLDS

1. One of the following conditions is met: Condition (A), (B) and (C)

Condition (A)

Number of the following signal input at the same time	2 or more

P switch	ON
N switch	ON
R switch	ON
D switch	ON

Condition (B)

Number of the following signal input at the same time	2 or more
STAR switch	ON
R switch	ON
D switch	ON

Condition (C)

When shift lever is in the S position, one of the following conditions is met.

STAR switch	ON
P switch	ON
N switch	ON
R switch	ON

COMPONENT OPERATING RANGE

Park/neutral Position switch	The park/neutral position switch sends only one signal to the ECM.

WIRING DIAGRAM

w/ Smart Key System:

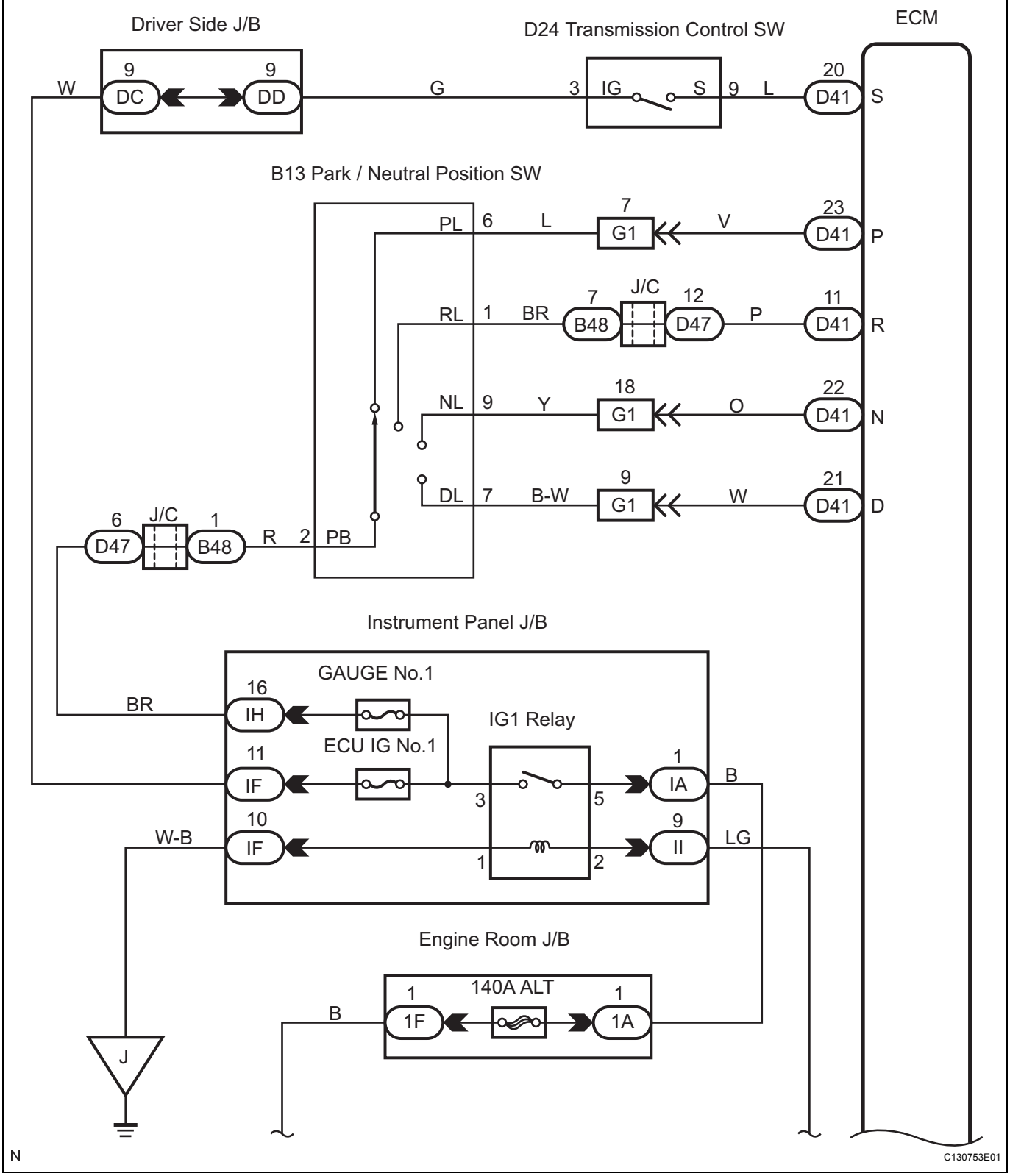

w/ Smart Key System:

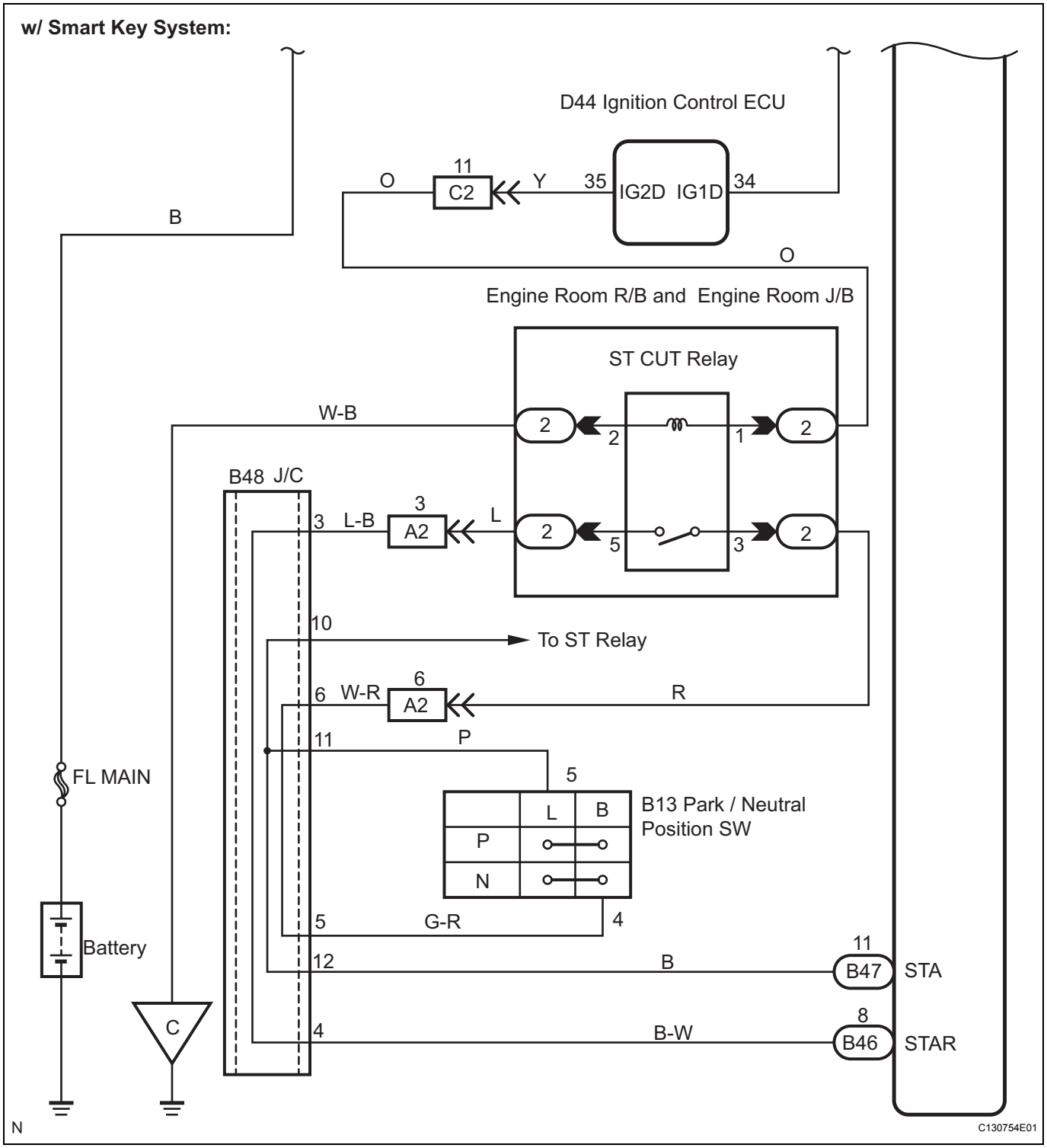

AX

w/o Smart Key System:

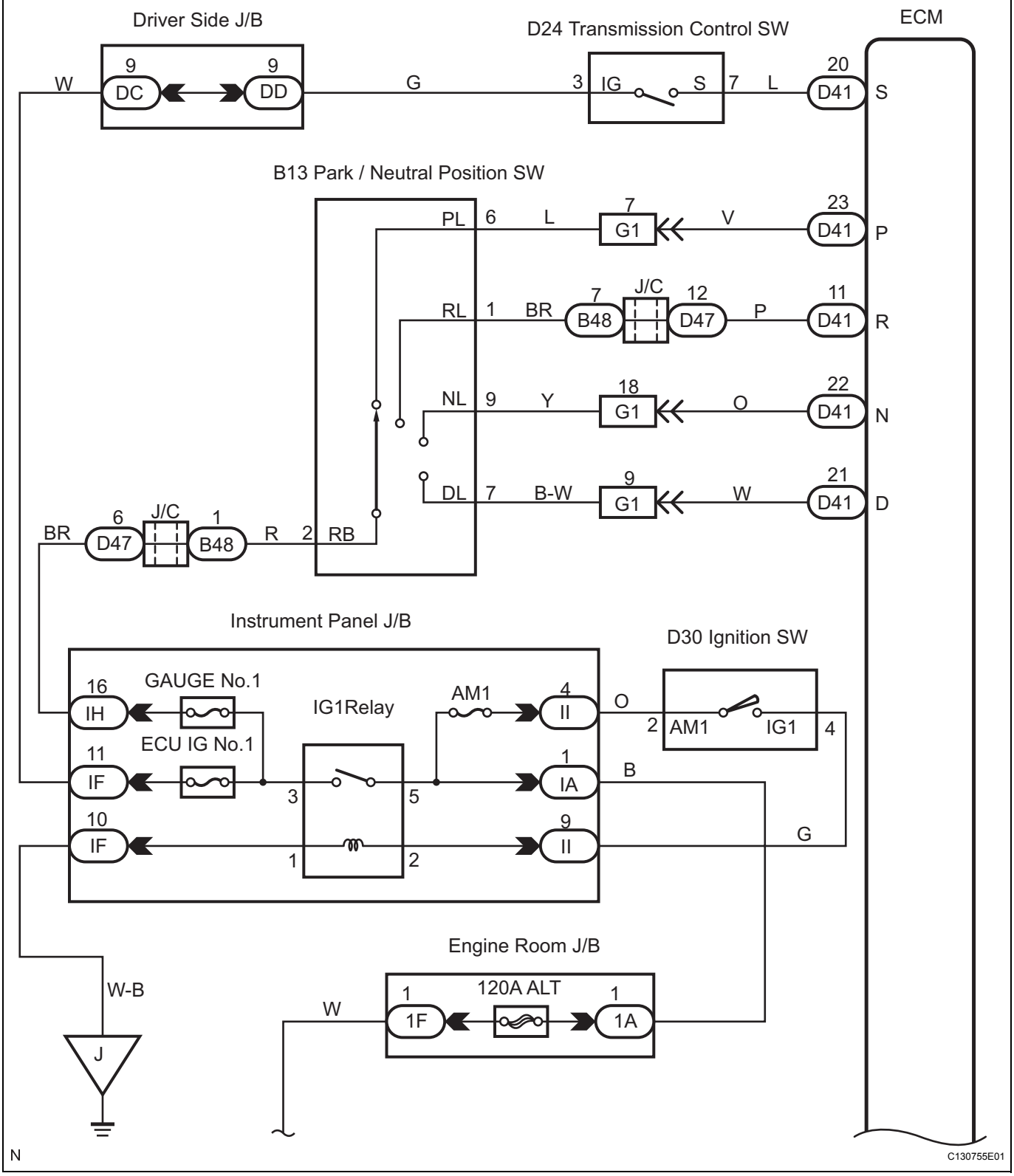

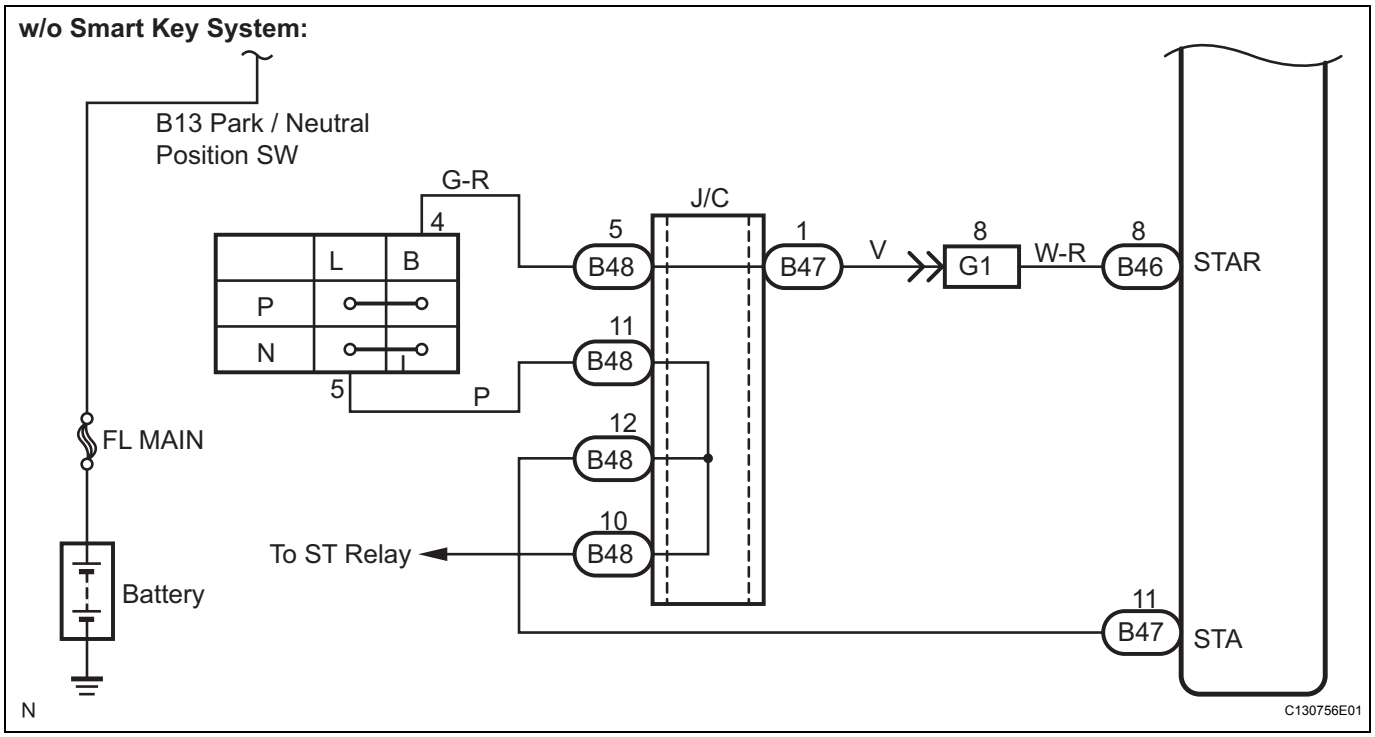

INSPECTION PROCEDURE

HINT:

According to the DATA LIST displayed by the intelligent tester, you can read the value of the switch, sensor, actuator and so on without parts removal. Reading the DATA LIST as the first step of troubleshooting is one method to shorten labor time.

NOTICE:

In the table below, the values listed under "Normal Condition" are reference values. Do not depend solely on these reference values when deciding whether a part is faulty or not.

1. READ DATA LIST

(a) Turn the ignition switch off.
(b) Connect the intelligent tester together with the CAN VIM (controller area network vehicle interface module) to the DLC3.
(c) Turn the ignition switch on (IG).
(d) Turn on the tester.
(e) Select the item "DIAGNOSIS / ENHANCED OBD II / DATA LIST".
(f) According to the display on the tester, read the "DATA LIST".

AX

Item	Measurement Item / Range (Display)	Normal Condition	Diagnostic Note
PNP SW [NSW]	PNP SW Status / ON or OFF	Shift lever position is; P and N: ON Except P or N: OFF	When the shift lever position displayed on the intelligent tester differs from the actual position, adjustment of the PNP switch or the shift cable may be incorrect.
REVERSE	PNP SW Status / ON or OFF	Shift lever position is; R: ON Except R: OFF	↑
DRIVE	PNP SW Status / ON or OFF	Shift lever position is; D and S: ON Except D or S: OFF	↑

1 INSPECT PARK/NEUTRAL POSITION SWITCH ASSEMBLY

Switch Side:

(Connector Front View):

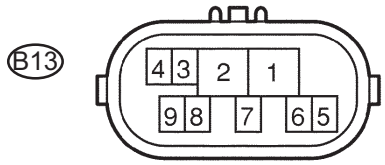

P

C110340E28

(a) Disconnect the park/neutral position switch connector.
(b) Measure resistance according to the value(s) in the table below when the shift lever is moved to each position.

Resistance

Shift Position	Tester Connection	Specified Condition
P	2 - 6 and 4 - 5	Below 1 Ω
Except P		10 kΩ or higher
R	2 - 1	Below 1 Ω
Except R		10 kΩ or higher
N	2 - 9 and 4 - 5	Below 1 Ω
Except N		10 kΩ or higher
D, S, "+" and "-"	2 - 7	Below 1 Ω
Except D, S, "+" and "-"		10 kΩ or higher

NG → **REPLACE PARK/NEUTRAL POSITION SWITCH ASSEMBLY**

OK

2 INSPECT TRANSMISSION FLOOR SHIFT ASSEMBLY

Switch Side:
(Connector Front View):

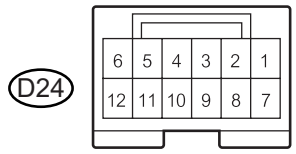

w/ Smart key System:

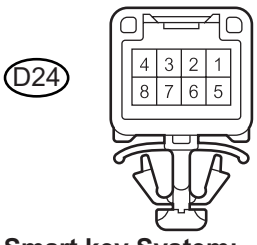

w/o Smart key System:

H

C130757E01

(a) Connect the park/neutral position switch connector.
(b) Disconnect the transmission control switch connector of shift lock control unit assembly.
(c) Measure the resistance according to the value(s) in the table below when the shift lever is moved to each position.

Resistance

Shift Position	Tester Connection	Specified Condition
S, "+" and "-"	3 - 9 *1 3 - 7 *2	Below 1 Ω
Except S, "+" and "-"	↑	10 kΩ or higher

*1: w/ Smart Key System
*1: w/ Smart Key System

NG → **REPLACE TRANSMISSION FLOOR SHIFT ASSEMBLY**

OK

AX

3	CHECK HARNESS AND CONNECTOR ((PARK/NEUTRAL POSITION SWITCH - ECM)

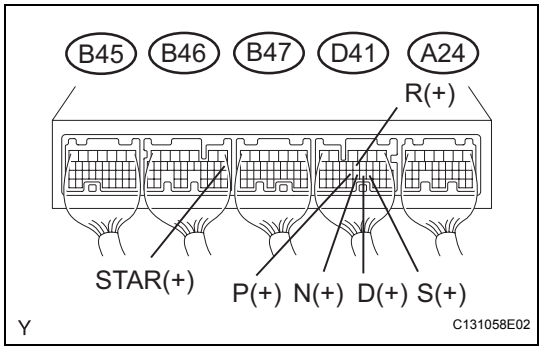

(a) Connect the transmission control switch connector of shift lock control unit assembly.
(b) Turn the ignition switch to the ON position, and measure the voltage according to the value(s) in the table below when the shift lever is moved to each position.

Voltage

Shift Position	Tester Connection	Specified Condition
P and N	B46-8 (STAR) - Body ground	Below 2 V
Except P and N		10 to 14 V
P	D41-23 (P) - Body ground	10 to 14 V
Except P		Below 1 V
N	D41-22 (N) - Body ground	10 to 14 V
Except N		Below 1 V
R	D41-11 (R) - Body ground	10 to 14 V*
Except R		Below 1 V
D and S	D41-21 (D) - Body ground	10 to 14 V
Except D and S		Below 1 V
S, "+" and "-"	D41-20 (S) - Body ground	10 to 14 V
Except S, "+" and "-"		Below 1 V

HINT:
*: The voltage will drop slightly due to lighting up of the back up light.

AX

NG → **REPAIR OR REPLACE HARNESS OR CONNECTOR**

OK

REPLACE ECM

DTC	P0710	Transmission Fluid Temperature Sensor "A" Circuit

DTC	P0712	Transmission Fluid Temperature Sensor "A" Circuit Low Input

DTC	P0713	Transmission Fluid Temperature Sensor "A" Circuit High Input

DESCRIPTION

The ATF (Automatic Transmission Fluid) temperature sensor converts the fluid temperature into a resistance value which is input into the ECM.
The ECM applies a voltage to the temperature sensor through ECM terminal THO1.
The sensor resistance changes with the transmission fluid temperature. As the temperature becomes higher, the sensor resistance decreases.
One terminal of the sensor is grounded so that the sensor resistance decreases and the voltage goes down as the temperature becomes higher.
The ECM calculates the fluid temperature based on the voltage signal.

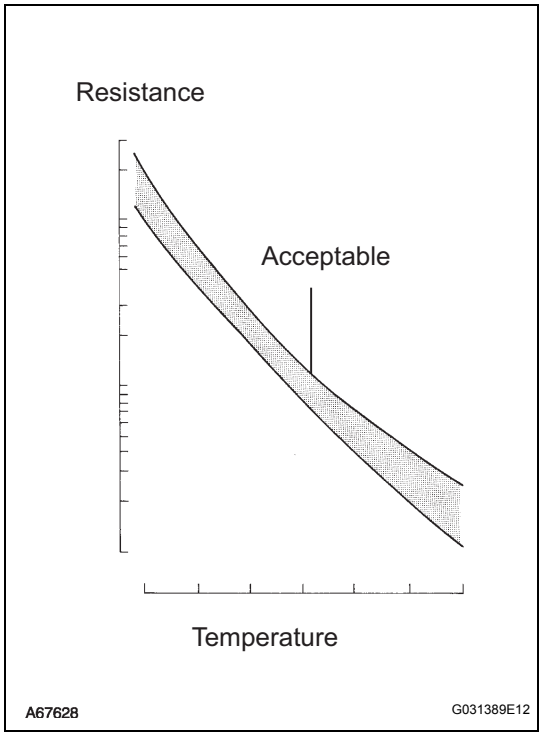

AX

DTC No.	DTC Detection Condition	Trouble Area
P0710	(a) and (b) are detected momentarily within 0.5 sec. when neither P0712 nor P0713 is detected (1-trip detection logic) (a) ATF temperature sensor resistance is less than 79 Ω. (b) ATF temperature sensor resistance is more than 156 kΩ. HINT: Within 0.5 sec., the malfunction switches from (a) to (b) or from (b) to (a)	• Open or short in ATF temperature sensor circuit • Transmission wire (ATF temperature sensor) • ECM
P0712	ATF temperature sensor resistance is less than 79 Ω for 0.5 sec. or more (1-trip detection logic)	• Short in ATF temperature sensor circuit • Transmission wire (ATF temperature sensor) • ECM

P0713	ATF temperature sensor resistance is more than 156 kΩ when 15 minutes or more have elapsed after the engine start DTC is detected for 0.5 sec. or more (1-trip detection logic)	• Open in ATF temperature sensor circuit • Transmission wire (ATF temperature sensor) • ECM

MONITOR DESCRIPTION

These DTCs indicate an open or short in the automatic transmission fluid (ATF) temperature sensor (TFT sensor) circuit. The automatic transmission fluid (ATF) temperature sensor converts ATF temperature to an electrical resistance value. Based on the resistance, the ECM determines the ATF temperature, and the ECM detects an opens or shorts in the ATF temperature circuit. If the resistance value of the ATF temperature is less than 79 Ω *1or more than 156 kΩ *2, the ECM interprets this as a fault in the ATF sensor or wiring. The ECM will turn on the MIL and store the DTC.
*1: 150°C (302°F) or more is indicated regardless of the actual ATF temperature.
*2: -40°C (-40°F) is indicated regardless of the actual ATF temperature.
HINT:
The ATF temperature can be checked on the OBD II scan tool or intelligent tester display.

MONITOR STRATEGY

Related DTCs	P0710: ATF temperature sensor/Range check (Chattering) P0712: ATF temperature sensor/Range check (Low resistance) P0713: ATF temperature sensor/Range check (High resistance)
Required sensors/Components	ATF temperature sensor (TFT sensor)
Frequency of operation	Continuous
Duration	0.5 sec.
MIL operation	Immediate
Sequence of operation	None

TYPICAL ENABLING CONDITIONS

P0710: Range check (Chattering)
P0712: Range check (Low resistance)

The monitor will run whenever these DTCs are not present.	None
The typical enabling condition is not available.	-

AX

P0713: Range check (High resistance)

The monitor will run whenever this DTC is not present.	None
Time after engine start	15 min. or more

TYPICAL MALFUNCTION THRESHOLDS

P0710: Range check (Chattering)

TFT (Transmission fluid temperature) sensor resistance	Less than 79 Ω or More than 156 kΩ

P0712: Range check (Low resistance)

TFT sensor resistance	Less than 79 Ω

P0713: Range check (High resistance)

TFT sensor resistance	More than 156 kΩ

COMPONENT OPERATING RANGE

TFT sensor.	Atmospheric temperature to approx. 130°C (266°F)

WIRING DIAGRAM

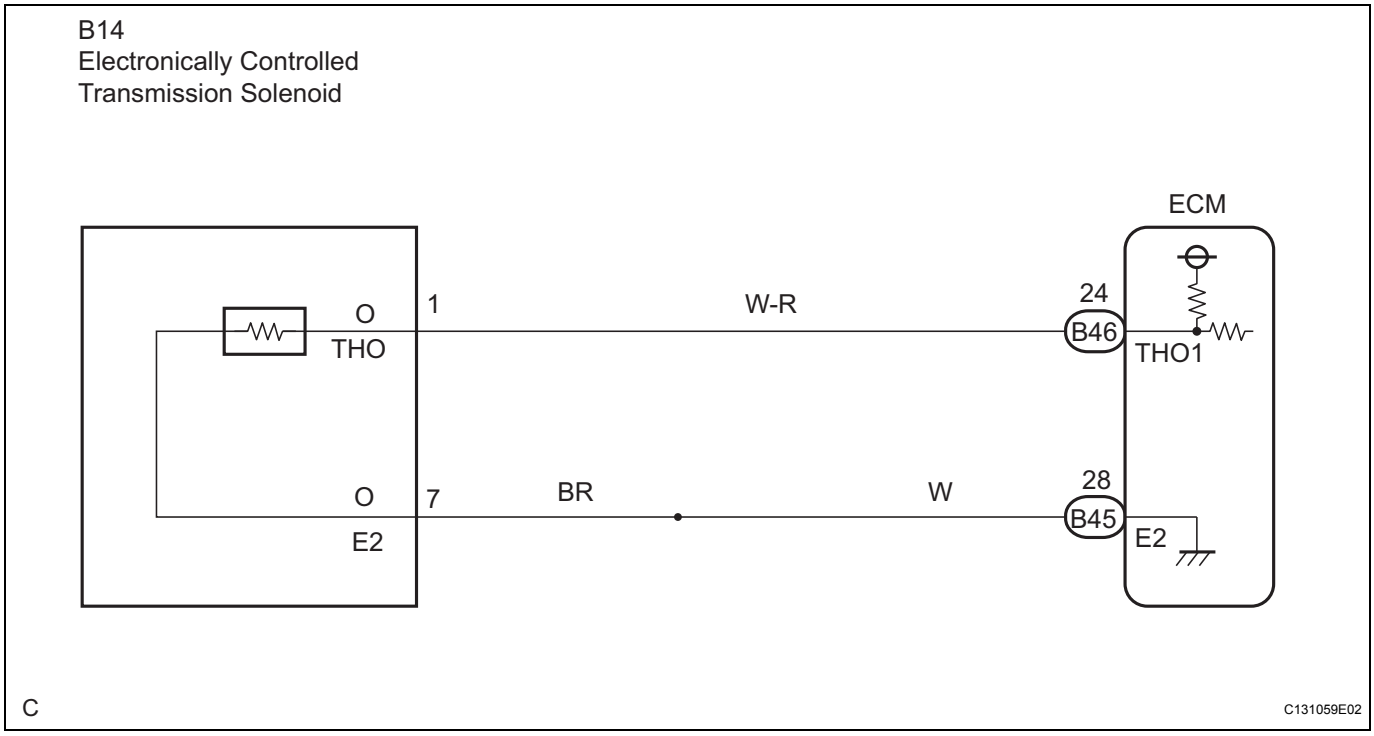

INSPECTION PROCEDURE

HINT:

According to the DATA LIST displayed by the OBD II scan tool or intelligent tester, you can read the value of the switch, sensor, actuator and so on without parts removal. Reading the DATA LIST as the first step of troubleshooting is one method to shorten labor time.

NOTICE:

In the table below, the value listed under "Normal Condition" are reference values. Do not depend solely on these reference values when deciding whether apart is faulty or not.

AX

1. READ DATA LIST

(a) Warm up the engine.
(b) Turn the ignition switch off.
(c) Connect the intelligent tester together with the CAN VIM (controller area network vehicle interface module) to the DLC3.
(d) Turn the ignition switch on (IG).
(e) Turn on the tester.
(f) Select the item "DIAGNOSIS / ENHANCED OBD II / DATA LIST".
(g) According to the display on the tester, read the "DATA LIST".

Item	Measurement Item/ Range (display)	Normal Condition
AT FLUID TEMP	ATF Temp. Sensor Value/ min.: -40°C (-40°F) max.: 215°C (419°F)	Approx. 80°C (176°F) (After Stall Test)

HINT:

When DTC P0712 is output and OBD II scan tool or intelligent tester output is 150°C (302°F), there is a short circuit.

When DTC P0713 is output and OBD II scan tool or intelligent tester output is -40°C (-40°F), there is an open circuit.

Measure the resistance between terminal THO1 (THO) and body ground.

Temperature Displayed	Malfunction

-40°C (-40°F)	Open circuit
150°C (302°F) or more	Short circuit

HINT:
If a circuit related to the ATF temperature sensor become open, P0713 is immediately set (in 0.5 second).
When P0713 is set, P0711 cannot be detected.
It is not necessary to inspect the circuit when P0711 is set.

1 INSPECT TRANSMISSION WIRE (ATF TEMPERATURE SENSOR)

Transmission Wire Side:

(Connector Front View):

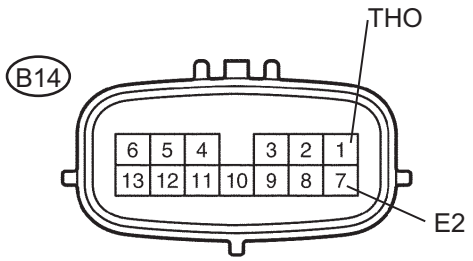

(a) Disconnect the transmission wire connector from the transaxle.
(b) Measure the resistance according to the value(s) in the table below.

Resistance

Tester Connection	Specified Condition
1 (THO) - 7 (E2)	79 Ω to 156 kΩ
1 (THO) - Body ground	10 kΩ or higher
7 (E2) - Body ground	↑

HINT:
If the resistance is out of the specified range with either the ATF temperature shown in the table below, the driveability of the vehicle may decrease.

ATF Temperature	Specified Condition
20°C (68°F)	3 to 4 kΩ
110°C (230°F)	0.22 to 0.28 kΩ

NG → **REPAIR OR REPLACE TRANSMISSION WIRE**

OK

2 CHECK HARNESS AND CONNECTOR (TRANSMISSION WIRE - ECM)

ECM:

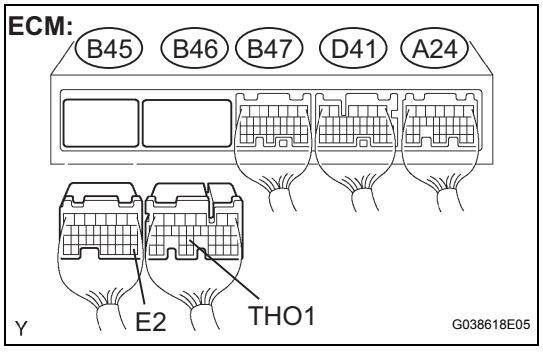

(a) Connect the transmission wire connector to the transaxle.
(b) Disconnect the ECM connectors.
(c) Measure the resistance according to the value(s) in the table below.

Resistance

Tester Connection	Specified Condition
B46 - 24 (THO1) - B45 - 28 (E2)	79 Ω to 156 kΩ

(d) Measure the resistance according to the value(s) in the table below.

Resistance (Check for short)

Tester Connection	Specified Condition
B46 - 24 (THO1) - Body ground	10 kΩ or higher
B45 - 28 (E2) - Body ground	

AX

NG → REPAIR OR REPLACE HARNESS OR CONNECTOR

OK

REPLACE ECM

DTC	P0711	Transmission Fluid Temperature Sensor "A" Performance

DESCRIPTION

The ATF (Automatic Transmission Fluid) temperature sensor converts the fluid temperature into a resistance value which is input into the ECM.

DTC No.	DTC Detection Condition	Trouble Area
P0711	(A) Both (a) and (b) are detected: (2-trip detection logic) (a) Intake air and engine coolant temperatures are more than -10°C (14°F) at engine start (b) After normal driving for over 19 min. and 9 km (6 mile) or more, ATF temp. is less than 20°C (68°F) (B) When engine coolant temp. is less that 35°C (95°F) at engine start, the ATF temp. is 110°C (230°F) or more after 17 min. of engine start (2-trip detection logic).	Transmission wire (ATF temperature sensor)

MONITOR DESCRIPTION

The ATF temperature sensor converts the ATF temperature to an electrical resistance value. Based on the resistance, the ECM determines the ATF temperature and detects an open or short in the ATF temperature circuit or a fault in the ATF temperature sensor.
After running the vehicle for a certain period, the ATF temperature should increase. If the ATF temperature is below 20°C (68°F) after running the vehicle for a certain period, the ECM interprets this as a fault, and turns on the MIL.
When the ATF temperature is 110°C (230°F) or more after 17 minutes of engine cold start, the ECM also determines this as a fault, turns on the MIL, and stores the DTC.

MONITOR STRATEGY

Related DTCs	P0711: ATF temperature sensor/Rationality check
Required sensors/Components	ATF temperature sensor (TFT sensor)
Frequency of operation	Continuous
Duration	3 sec.: Condition (A) 10 sec.: Condition (B)
MIL operation	2 driving cycles
Sequence of operation	None

AX

TYPICAL ENABLING CONDITIONS

All:

The monitor will run whenever this DTC is not present.	None
Time after engine start	16 min. and 40 sec. or more
ECT (Engine coolant temperature)	-15°C (5°F) or more
ATF sensor circuit	Not circuit malfunction
ECT sensor circuit	Not circuit malfunction
IAT sensor circuit	Not circuit malfunction
ETCS	Not circuit malfunction

Condition (A):

Time After engine start	18 min. and 20 sec.
Driving distance after engine start	9 km (5.6 mile) or more
IAT (Intake air temperature) (12 sec. after starting engine)	-10°C (14°F) or more
ECT (12 sec. after starting engine)	-10°C (14°F) or more

Condition (B):

ECT (Current temperature)	60°C (140°F) or more
ECT (12 sec. after engine start)	Less than 35°C (95°F)

TYPICAL MALFUNCTION THRESHOLDS

Condition (A):

ATF temperature sensor	Less than 20°C (68°F)

Condition (B):

ATF temperature sensor	110°C (230°F) or more

COMPONENT OPERATING RANGE

ATF temperature sensor	Atmospheric temperature to approx. 130°C (266°F)

WIRING DIAGRAM

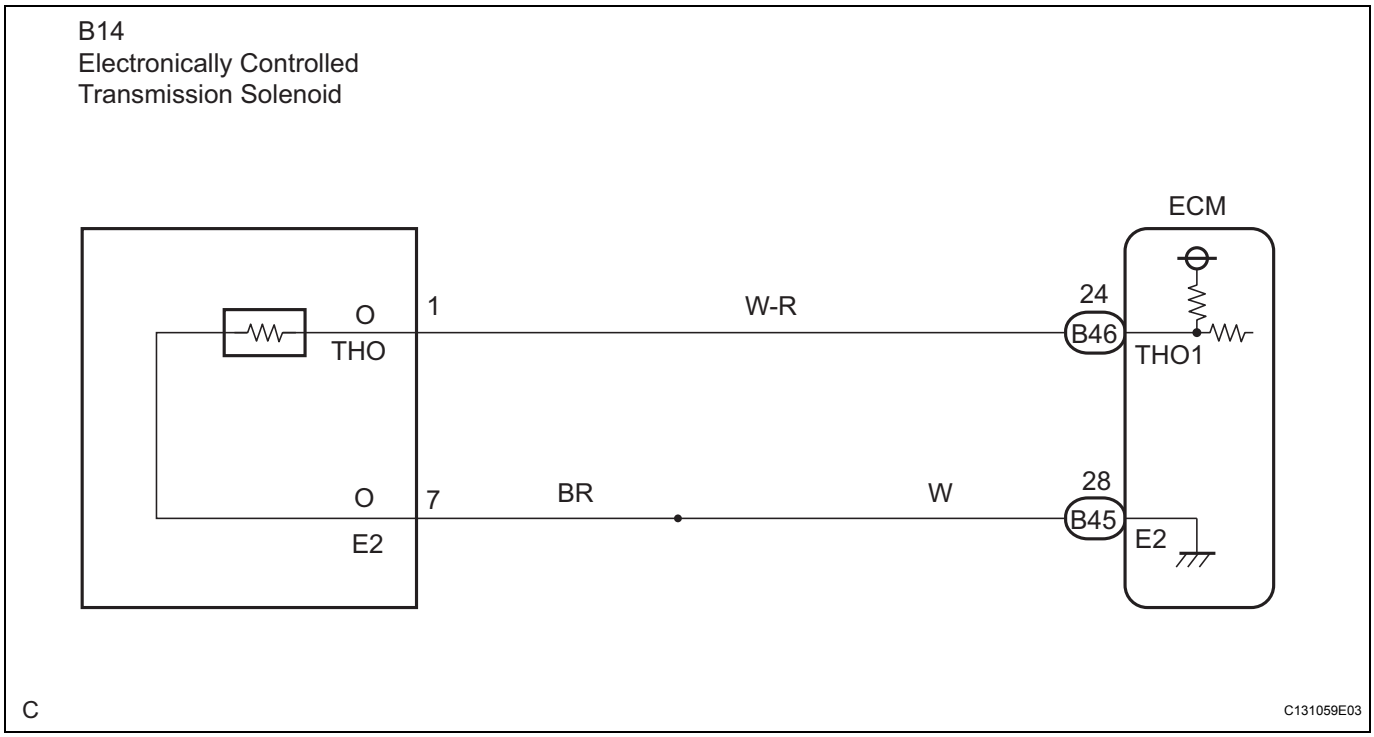

AX

INSPECTION PROCEDURE

HINT:

According to the DATA LIST displayed by the OBD II scan tool or intelligent tester, you can read the value of the switch, sensor, actuator and so on without parts removal. Reading the DATA LIST as the first step of troubleshooting is one method to shorten labor time.

NOTICE:

In the table below, the value listed under "Normal Condition" are reference values. Do not depend solely on these reference values when deciding whether apart is faulty or not.

1. READ DATA LIST

(a) Warm up the engine.

(b) Turn the ignition switch off.

(c) Connect the intelligent tester together with the CAN VIM (controller area network vehicle interface module) to the DLC3.

(d) Turn the ignition switch on (IG).
(e) Turn on the tester.
(f) Select the item "DIAGNOSIS / ENHANCED OBD II / DATA LIST".
(g) According to the display on the tester, read the "DATA LIST".

Item	Measurement Item/ Range (display)	Normal Condition
AT FLUID TEMP	ATF Temp. Sensor Value/ min.: -40°C (-40°F) max.: 215°C (419°F)	Approx. 80°C (176°F) (After Stall Test)

HINT:
When DTC P0712 is output and OBD II scan tool or intelligent tester output is 150°C (302°F), there is a short circuit.
When DTC P0713 is output and OBD II scan tool or intelligent tester output is -40°C (-40°F), there is an open circuit.
Measure the resistance between terminal THO1 (THO) and body ground.

Temperature Displayed	Malfunction
-40°C (-40°F)	Open circuit
150°C (302°F) or more	Short circuit

HINT:
If a circuit related to the ATF temperature sensor becomes open, P0713 is immediately set (in 0.5 second).
When P0713 is set, P0711 cannot be detected.
It is not necessary to inspect the circuit when P0711 is set.

1 CHECK OTHER DTCS OUTPUT (IN ADDITION TO DTC P0711)

(a) Connect the OBD II scan tool or the intelligent tester to the DLC3.
(b) Turn the ignition switch on (IG) and push the OBD II scan tool or the intelligent tester main switch ON.
(c) When you use intelligent tester:
Select the item "DIAGNOSIS / ENHANCED OBD II / DTC INFO / CURRENT CODES".
(d) Read the DTCs using the OBD II scan tool or the intelligent tester.

Result

Display (DTC output)	Proceed to
Only "P0711" is output	**A**
"P0711" and other DTCs	**B**

HINT:
If any other codes besides "P0711" are output, perform troubleshooting for those DTCs first.

B → **GO TO DTC CHART**

A

2 CHECK TRANSMISSION FLUID LEVEL

OK:
Automatic transmission fluid level is correct.

NG → ADD FLUID

OK

REPLACE TRANSMISSION WIRE (ATF TEMPERATURE SENSOR)

DTC	P0717	Turbine Speed Sensor Circuit No Signal

DESCRIPTION

This sensor detects the rotation speed of the input turbine. By comparing the input turbine speed signal (NT) with the counter gear speed sensor signal (NC), the ECM detects the shift timing of the gears and appropriately controls the engine torque and hydraulic pressure according to various conditions. Thus, providing smooth gear shift.

DTC No.	DTC Detection Condition	Trouble Area
P0717	ECM detects conditions (a), (b) and (c) continuously for 5 sec. or more: (1-trip detection logic) (a) Vehicle speed: 50 km/h (31 mph) or more (b) Park/neutral position switch (STAR and R) is OFF (c) Speed sensor (NT): less than 300 rpm	• Open or short in transmission revolution sensor NT (speed sensor NT) circuit • Transmission revolution sensor NT (speed sensor NT) • ECM • Automatic transaxle assembly

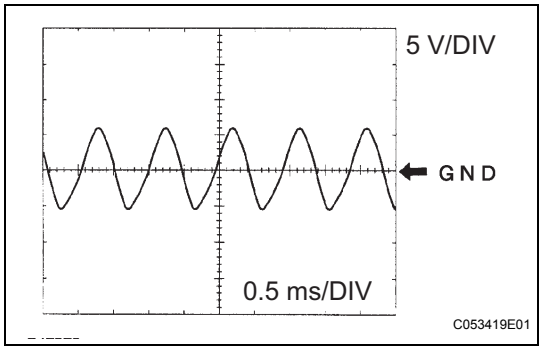

Reference (Using an oscilloscope):
Check the waveform between terminals NT+ and NT- of the ECM connector.
Standard: Refer to the illustration.

Terminal	Tool setting	Vehicle condition
NT+ - NT-	5 V/DIV, 0.5ms/DIV	Vehicle speed 20 km/h (12 mph)

MONITOR DESCRIPTION

AX

The NT terminal of the ECM detects a revolution signal from the speed sensor (NT) (input RPM). The ECM calculates a gearshift comparing the speed sensor (NT) with the speed sensor (NC).
While the vehicle is operating in 2nd, 3rd, 4th or 5th gear in the shift position of D, if the input shaft revolution is less than 300 rpm *1although the output shaft revolution is more than 1,000 rpm *2, the ECM detects the trouble, illuminates the MIL and stores the DTC.
*1: Pulse is not output or is irregularly output.
*2: The vehicle speed is 50 km/h (31 mph) or more.

MONITOR STRATEGY

Related DTCs	P0717: Speed sensor (NT) / Verify pulse input
Required sensors/Components	Speed sensor (NT), Speed sensor (NC)
Frequency of operation	Continuous
Duration	5 sec.
MIL operation	Immediate
Sequence of operation	None

TYPICAL ENABLING CONDITIONS

The monitor will run whenever this DTC is not present.	P0500 (VSS) P0748, P0778, P0798 (Shift solenoid valve (range))

Shift change	Shift change is completed and before starting next shift change operation
ECM selected gear	2nd, 3rd, 4th or 5th
Output shaft rpm	1,000 rpm or more
STAR switch	OFF
R switch	OFF
Engine	Running
Battery voltage	8 V or more
Ignition switch	ON
Starter	OFF

TYPICAL MALFUNCTION THRESHOLDS

Sensor signal rpm	Less than 300 rpm

COMPONENT OPERATING RANGE

Speed sensor (NT)	Turbine speed is equal to engine speed with lock-up ON

WIRING DIAGRAM

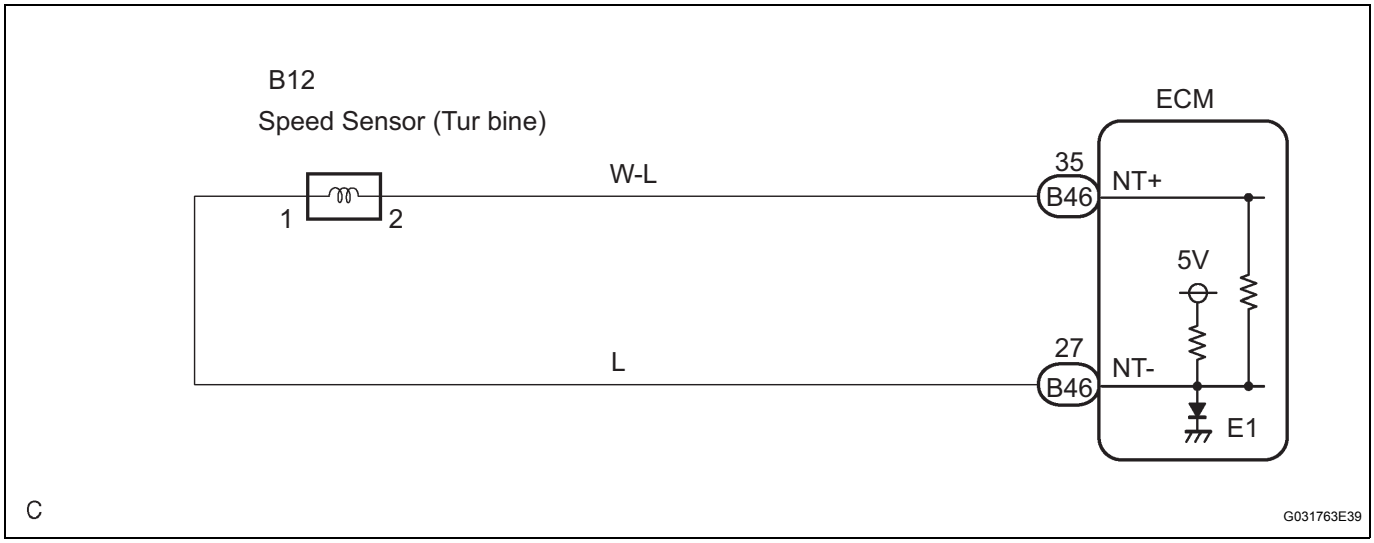

AX

INSPECTION PROCEDURE

1	INSPECT SPEED SENSOR INSTALLATION

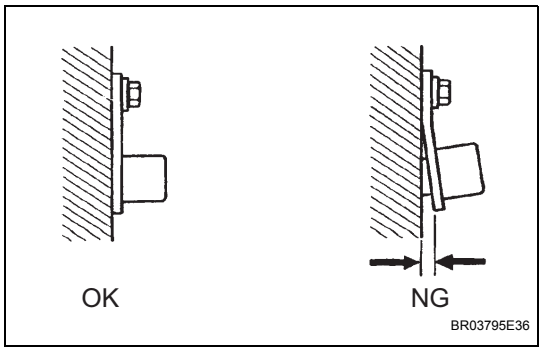

(a) Check the speed sensor installation.

OK:

The installation bolt is tightened properly and there is no clearance between the sensor and transaxle case.

NG	REPLACE SPEED SENSOR (NT)

OK

2	INSPECT SPEED SENSOR (NT)

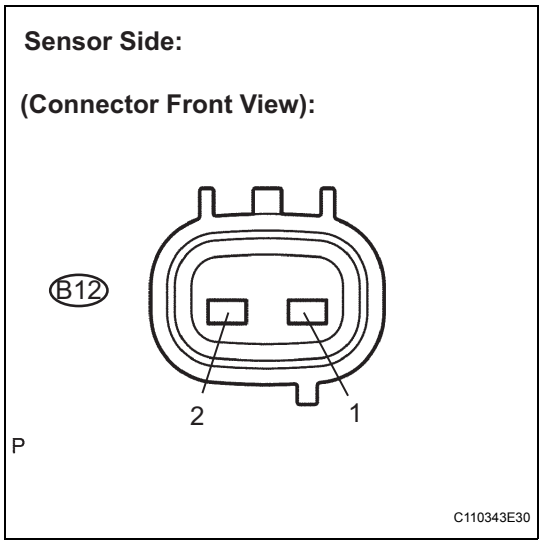

(a) Disconnect the speed sensor connector from the transaxle.
(b) Measure the resistance according to the value(s) in the table below.

Resistance

Tester Connection	Specified Condition 20 °C (68 °F)
1 - 2	560 to 680 Ω

NG → REPLACE SPEED SENSOR (NT)

OK

3	CHECK HARNESS AND CONNECTOR (SPEED SENSOR - ECM)

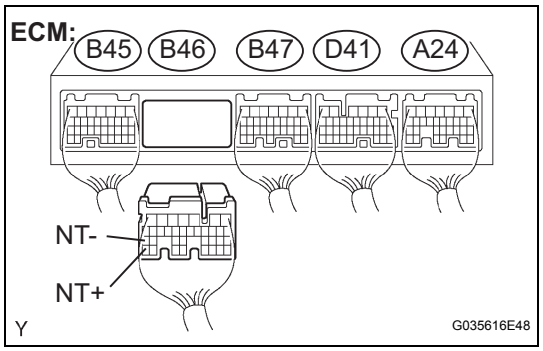

(a) Connect the speed sensor connector.
(b) Disconnect the ECM connector.
(c) Measure the resistance according to the value(s) in the table below.

Resistance

Tester Connection	Specified Condition 20°C (68°F)
B46 - 35 (NT+) - B46 - 27 (NT-)	560 to 680 Ω

(d) Measure the resistance according to the value(s) in the table below.

Resistance (Check for short)

Tester Connection	Specified Condition
B46 - 35(NT+) - Body ground	10 kΩ or higher
B46 - 27(NT-) - Body ground	

NG → REPAIR OR REPLACE HARNESS OR CONNECTOR

OK

REPLACE ECM

AX

DTC	P0724	Brake Switch "B" Circuit High

DESCRIPTION

The purpose of this circuit is to prevent the engine from stalling while driving in lock-up condition when brakes are suddenly applied.
When the brake pedal is depressed, this switch sends a signals to the ECM. Then the ECM cancels the operation of the lock-up clutch while braking is in progress.

DTC No.	DTC Detecting Condition	Trouble Area
P0724	The stop light switch remains ON even when the vehicle is driven in a STOP (less than 3 km/h (2 mph) and GO (30 km/h (19 mph) or more) fashion 5 times. (2-trip detection logic).	• Short in stop light switch circuit • Stop light switch • ECM

MONITOR DESCRIPTION

This DTC indicates that the stop light switch remains on. When the stop light switch remains ON during "stop and go" driving, the ECM interprets this as a fault in the stop light switch and the MIL comes on and the ECM stores the DTC. The vehicle must stop (less than 3 km/h (2 mph)) and go (30 km/h (19 mph) or more) 5 times for two driving cycles in order to detect a malfunction.

MONITOR STRATEGY

Related DTCs	P0724: Stop light switch/Rationality
Required sensors/Components	Stop light switch, Vehicle speed sensor
Frequency of operation	Continuous
Duration	GO and STOP 5 times
MIL operation	2 driving cycles
Sequence of operation	None

TYPICAL ENABLING CONDITIONS

The monitor will run whenever this DTC is not present.	None
Ignition switch	ON
Starter	OFF
Battery voltage	8 V or more
GO (Vehicle speed is 30 km/h (18.63 mph) or more)	Once
STOP (Vehicle speed is less than 3 km/h (1.86 mph))	Once

TYPICAL MALFUNCTION THRESHOLDS

Brake switch	Remain ON during GO and STOP 5 times

WIRING DIAGRAM

See page ES-265.

INSPECTION PROCEDURE

1	READ VALUE OF DATA LIST

HINT:
According to the DATA LIST displayed by the OBD II scan tool or intelligent tester, you can read the value of the switch, sensor, actuator and so on without parts removal. Reading the DATA LIST as the first step of troubleshooting is one method to shorten labor time.

(a) Warm up the engine.
(b) Turn the ignition switch off.
(c) Connect the OBD II scan tool or intelligent tester together with the CAN VIM (controller area network vehicle interface module) to the DLC3.
(d) Turn the ignition switch on (IG).
(e) Turn on the tester..
(f) Select the item "DIAGNOSIS / ENHANCED OBD II / DATA LIST".
(g) According to the display on the tester, read the "DATA LIST".

DATA LIST

Item	Measurement Item/ Range (display)	Normal Condition
STOP LIGHT SW	Stop light SW Status/ ON or OFF	• Brake pedal is depressed: ON • Brake pedal is released: OFF

NOTICE:
In the table below, the value listed under "Normal Condition" are reference values. Do not depend solely on these reference values when deciding whether apart is faulty or not.

OK → **Go to step 3**

NG

2	INSPECT STOP LIGHT SWITCH ASSEMBLY

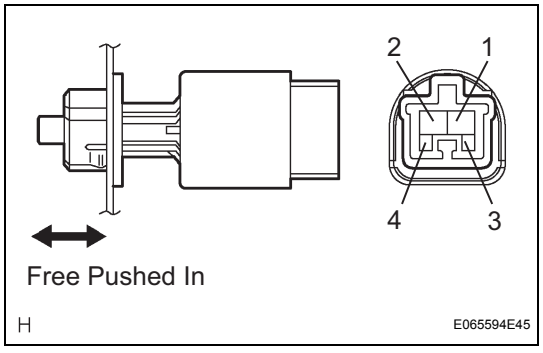

(a) Remove the stop light switch assembly.
(b) Measure the resistance according to the value(s) in the table below.

Resistance

Switch position	Tester Connection	Specified Condition
Switch pin free	1 - 2	Below 1 Ω
Switch pin pushed in	↑	10 kΩ or higher
Switch pin free	3 - 4	10 kΩ or higher
Switch pin pushed in	↑	Below 1 Ω

NG → **REPLACE STOP LIGHT SWITCH ASSEMBLY**

OK

3	CHECK HARNESS AND CONNECTOR (STOP LIGHT SWITCH ASSEMBLY - ECM)

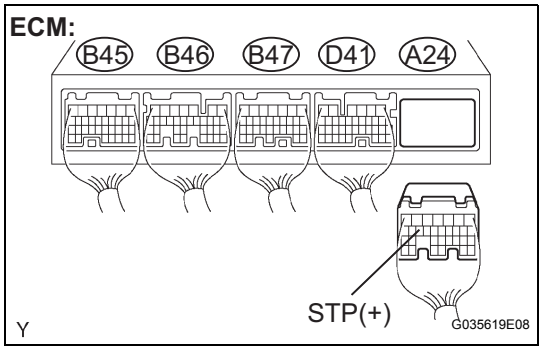

(a) Install the stop light switch assembly.
(b) Measure the voltage according to the value(s) in the table below when the brake pedal is depressed and released.

Voltage

Condition	Tester Connection	Specified Condition
Brake pedal is depressed	A24 - 15 (STP) - Body ground	10 to 14 V
Brake pedal is released		Below 1 V

NG → **REPAIR OR REPLACE HARNESS OR CONNECTOR**

OK

REPLACE ECM

AX

DTC	P0741	Torque Converter Clutch Solenoid Performance (Shift Solenoid Valve DSL)

SYSTEM DESCRIPTION

The ECM uses the signals from the throttle position sensor, air-flow meter, turbine (input) speed sensor, intermediate (counter) shaft speed sensor and crankshaft position sensor to monitor the engagement condition of the lock-up clutch.
Then the ECM compares the engagement condition of the lock-up clutch with the lock-up schedule in the ECM memory to detect a mechanical problems of the shift solenoid valve DSL, valve body and torque converter clutch.

DTC No.	DTC Detection CondS1ition	Trouble Area
P0741	Lock-up does not occur when driving in the lock-up range (normal driving at 80 km/h [50 mph]), or lock up remains ON in the lock-up OFF range. (2-trip detection logic)	• Shift solenoid valve DSL remains open or closed • Valve body is blocked • Torque converter clutch • Automatic transaxle (clutch, brake or gear etc.) • Line pressure is too low

MONITOR DESCRIPTION

Torque converter lock-up is controlled by the ECM based on the speed sensor (NT), speed sensor (NC), engine rpm, engine load, engine temperature, vehicle speed, transmission temperature, and gear selection. The ECM determines the lock-up status of the torque converter by comparing the engine rpm (NE) to the input turbine rpm (NT). The ECM calculates the actual transmission gear by comparing input turbine rpm (NT) to counter gear rpm (NC). When conditions are appropriate, the ECM requests "lock-up" by applying control voltage to the shift solenoid DSL. When the DSL is turned on, it applies pressure to the lock-up relay valve and locks the torque converter clutch.
If the ECM detects no lock-up after lock-up has been requested or if it detects lock-up when it is not requested, the ECM interprets this as a fault in the shift solenoid valve DSL or lock-up system performance. The ECM will turn on the MIL and store the DTC.
HINT:
Example:
When any of the following is met, the system judges it as a malfunction.

- There is a difference in rotation between the input side (engine speed) and output side (input turbine speed) of the torque converter when the ECM commands lock-up.
  (Engine speed is at least 75 rpm greater than input turbine speed.)
- There is no difference in rotation between the input side (engine speed) and output side (input turbine speed) of the torque converter when the ECM commands lock-up off.
  (The difference between engine speed and input turbine speed is less than 35 rpm.)

AX

MONITOR STRATEGY

Related DTCs	P0741: Shift solenoid valve DSL/OFF malfunction Shift solenoid valve DSL/ON malfunction
Required sensors/Components	Shift solenoid valve DSL, Speed sensor (NT), Speed sensor (NC), Crankshaft position sensor (NE), Throttle position sensor (VPA1), Mass air flow sensor (MAF), Transmission temperature sensor (THO1), Engine coolant temperature sensor (ECT)
Frequency of operation	Continuous
Duration	OFF malfunction 3.5 sec. ON malfunction 1.8 sec.
MIL operation	2 driving cycles
Sequence of operation	None

TYPICAL ENABLING CONDITIONS

ALL:

The monitor will run whenever this DTC is not present.	P0115 - P0118 (ECT sensor) P0125 (Insufficient ECT for closed loop) P0500 (VSS) P0748, P0778, P0798 (Shift solenoid valve (range))
ECT (Engine coolant temperature)	10°C (50°F) or more
Transmission range	"D"
TFT (Transmission fluid temperature)	-20°C (-4°F) or more
TFT sensor circuit	Not circuit malfunction
ECT sensor circuit	Not circuit malfunction
Turbine speed sensor circuit	Not circuit malfunction
Intermediate shaft speed sensor circuit	Not circuit malfunction
Output speed sensor circuit	Not circuit malfunction
Shift solenoid valve SL1 circuit	Not circuit malfunction
Shift solenoid valve SL2 circuit	Not circuit malfunction
Shift solenoid valve SL3 circuit	Not circuit malfunction
Shift solenoid valve S4 circuit	Not circuit malfunction
Shift solenoid valve SR circuit	Not circuit malfunction
Shift solenoid valve DSL circuit	Not circuit malfunction
Electronic throttle system	Not circuit malfunction

OFF malfunction

ECM lock-up command	ON
ECM selected gear	3rd, 4th or 5th
Vehicle speed	25 km/h (15.5 mph) or more

ON malfunction

ECM lock-up command	OFF
ECM selected gear	3rd, 4th or 5th
Throttle valve opening angle	7% or more
Vehicle speed	25 to 60 km/h (15.5 to 37.3 mph)

AX

TYPICAL MALFUNCTION THRESHOLDS

Either of the following conditions is met: OFF malfunction or ON malfunction OFF malfunction:

Engine Speed - Input (turbine) speed	100 rpm or more

ON malfunction:

Difference between engine speed and input (turbine) speed	Less than 35 rpm

INSPECTION PROCEDURE

HINT:

Performing the ACTIVE TEST using the intelligent tester allows the relay, VSV, actuator and so on to operate without parts removal. Performing the ACTIVE TEST as the first step of troubleshooting is one method to shorten labor time.

It is possible to display the DATA LIST during the ACTIVE TEST.

1. PERFORM ACTIVE TEST

(a) Warm up the engine.

(b) Turn the ignition switch off.

(c) Connect the intelligent tester together with the CAN VIM (controller area network vehicle interface module) to the DLC3.

(d) Turn the ignition switch on (IG).
(e) Turn on the tester.
(f) Select the item "DIAGNOSIS / ENHANCED OBD II / ACTIVE TEST".
(g) According to the display on the tester, perform the "ACTIVE TEST".

Item	Test Details	Diagnostic Note
LOCK UP	[Test Details] Control the shift solenoid DSL to set the automatic transaxle to the lock-up condition. [Vehicle Condition] Vehicle Speed: 60 km/h (37 mph) or more	Possible to check the DSL operation.

HINT:
- This test can be conducted when the vehicle speed is 60 km/h (37 mph) or more.
- This test can be conducted in the 5th gear.

(h) Lightly depress the accelerator pedal and check that the engine speed does not change abruptly.
HINT:
- When changing the accelerator pedal opening angle while driving, if the engine speed does not change, lock-up is on.
- Slowly release, but not fully, the accelerator pedal in order to decelerate. (Fully releasing the pedal will close the throttle valve and lock-up may be turned off.)

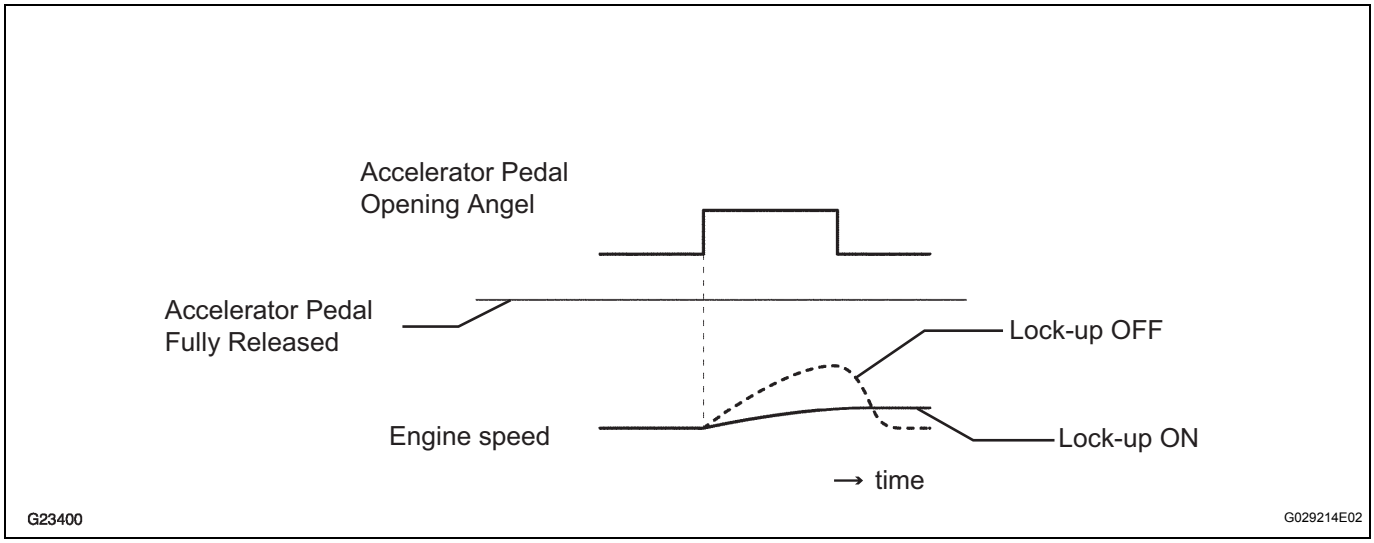

AX

1	CHECK OTHER DTCS OUTPUT (IN ADDITION TO DTC P0741)

(a) Connect the OBD II scan tool or the intelligent tester together with the CAN VIM (controller area network vehicle interface module) to the DLC3.
(b) Turn the ignition switch on (IG) and turn the OBD II scan tool or the intelligent tester main switch ON.
(c) When you use intelligent tester:
Select the item "DIAGNOSIS / ENHANCED OBD II / DTC INFO / CURRENT CODES".
(d) Read the DTCs using the OBD II scan tool or the intelligent tester.

Result:

Display (DTC output)	Proceed to
Only "P0741" is output	A
"P0741" and other DTCs	B

HINT:
If any other codes besides "P0741" are output, perform the troubleshooting for those DTCs first.

B → GO TO DTC CHART

A

2 INSPECT TRANSMISSION WIRE (DSL)

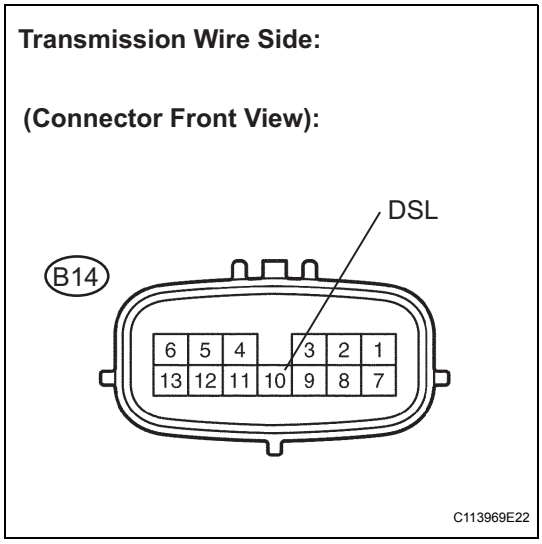

(a) Disconnect the transmission wire connector from the transaxle.
(b) Measure the resistance according to the value(s) in the table below.

Resistance

Tester Connection	Specified Condition 20°C (68°F)
10 - Body ground	11 to 13 Ω

NG → Go to step 4

OK

3 CHECK HARNESS AND CONNECTOR (TRANSMISSION WIRE - ECM)

AX

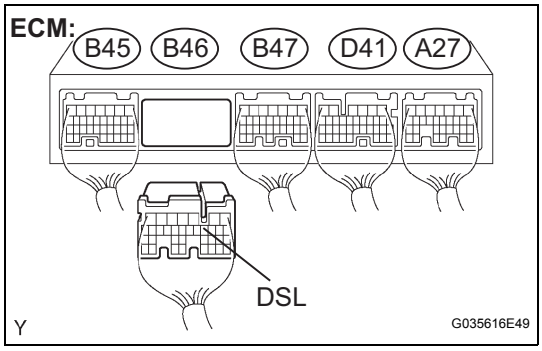

(a) Connect the transmission wire connector.
(b) Disconnect the ECM connector.
(c) Measure the resistance according to the value(s) in the table below.

Resistance

Tester Connection	Specified Condition 20°C (68°F)
B46 - 11 (DSL) - Body ground	11 to 13 Ω

NG → REPAIR OR REPLACE HARNESS OR CONNECTOR

OK

4	INSPECT SHIFT SOLENOID VALVE (DSL)

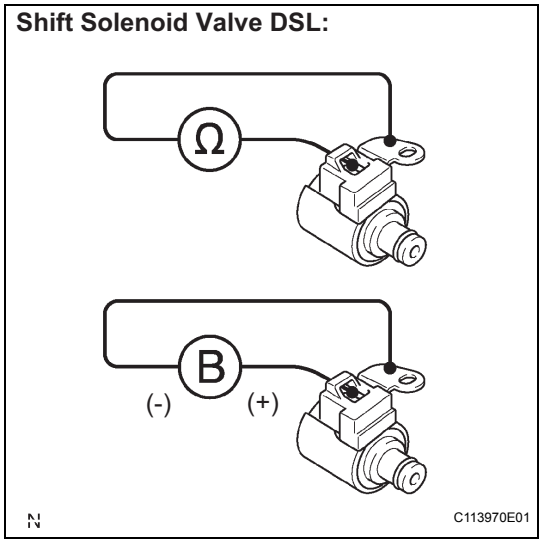

(a) Remove the shift solenoid valve DSL.
(b) Measure the resistance according to the value(s) in the table below.

Resistance

Tester Connection	Specified Condition 20°C (68°F)
Solenoid Connector (DSL) - Solenoid Body (DSL)	11 to 13 Ω

(c) Connect the positive (+) lead to the terminal of the solenoid connector, and the negative (-) lead to the solenoid body.

OK:

The solenoid valve makes an operating sound.

NG → **REPLACE SHIFT SOLENOID VALVE (DSL)**

OK

5	CHECK TRANSMISSION WIRE

OK:

The connectors and pins are securely installed.
There is no open or short on the wire harness.

NG → **REPAIR OR REPLACE TRANSMISSION WIRE**

OK

6	INSPECT TRANSMISSION VALVE BODY ASSEMBLY

OK:

There are no foreign objects on each valve.

NG → **REPAIR OR REPLACE TRANSMISSION VALVE BODY ASSEMBLY**

OK

7	INSPECT TORQUE CONVERTER CLUTCH ASSEMBLY

OK:

The torque converter clutch operates normally.

NG → **REPLACE TORQUE CONVERTER CLUTCH ASSEMBLY**

AX

OK

REPAIR AUTOMATIC TRANSAXLE ASSEMBLY

DTC	P0746	Pressure Control Solenoid "A" Performance (Shift Solenoid Valve SL1)

SYSTEM DESCRIPTION

The ECM uses signals from the vehicle speed sensor to detect the actual gear position (1st, 2nd, 3rd, 4th or 5th gear).
Then the ECM compares the actual gear with the shift schedule in the ECM memory to detect mechanical problems of the shift solenoid valves, valve body or automatic transaxle (clutch, brake or gear etc.).

DTC No.	DTC Detecting Condition	Trouble Area
P0746	The gear required by the ECM does not match the actual gear when driving (2-trip detection logic)	• Shift solenoid valve SL1 remains open or closed • Valve body is blocked • Automatic transaxle (clutch, brake or gear etc.)

MONITOR DESCRIPTION

The ECM commands gear shifts by turning the shift solenoid valves "ON/OFF". According to the input shaft revolution, intermediate (counter) shaft revolution and output shaft revolution, the ECM detects the actual gear position (1st, 2nd, 3rd, 4th or 5th gear position). When the gear position commanded by the ECM and the actual gear position are not the same, the ECM illuminates the MIL.
HINT:
Example:
When either condition (a) or (b) is met, the ECM detects a malfunction.
(a) The ECM commands the 1st gear, but the actual gear is 2nd.
(b) The ECM commands the 2nd gear, but the actual gear is 1st.

MONITOR STRATEGY

Related DTCs	P0746: Shift solenoid valve SL1/OFF malfunction Shift solenoid valve SL1/ON malfunction
Required sensors/Components	Shift solenoid valve SL1, Speed sensor (NT), Speed sensor (NC), Crankshaft position sensor (NE)
Frequency of operation	Continuous
Duration	0.8 sec.
MIL operation	2 driving cycles
Sequence of operation	None

AX

TYPICAL ENABLING CONDITIONS

ALL:

The monitor will run whenever this DTC is not present.	P0115 - P0118 (ECT sensor) P0125 (Insufficient ECT for closed loop) P0500 (VSS) P0748, P0778, P0798 (Shift solenoid valve (range))
ECT (Engine coolant temperature)	10°C (50°F) or more
Transmission range	"D"
TFT (Transmission fluid temperature)	-20°C (-4°F) or more
TFT sensor circuit	Not circuit malfunction
ECT sensor circuit	Not circuit malfunction
Turbine speed sensor circuit	Not circuit malfunction
Intermediate shaft speed sensor circuit	Not circuit malfunction
Output speed sensor circuit	Not circuit malfunction
Shift solenoid valve SL1 circuit	Not circuit malfunction
Shift solenoid valve SL2 circuit	Not circuit malfunction

Shift solenoid valve SL3 circuit	Not circuit malfunction
Shift solenoid valve S4 circuit	Not circuit malfunction
Shift solenoid valve SR circuit	Not circuit malfunction
Shift solenoid valve DSL circuit	Not circuit malfunction
Electronic throttle system	Not circuit malfunction

OFF malfunction:

ECM selected gear	1st
Vehicle speed	Less than 40 km/h (24.9 mph)
Throttle valve opening angle	4.5% or more at engine speed 1,900 rpm (Varies with engine speed)

ON malfunction:

ECM selected gear	2nd
Throttle valve opening angle	4.5% or more at engine speed 1,900 rpm (Varies with engine speed)

TYPICAL MALFUNCTION THRESHOLDS

Either of the following conditions is met: OFF malfunction or ON malfunction

OFF malfunction:

2 detections are necessary per driving cycle:

1st detection; temporary flag ON

2nd detection; pending fault code ON

Input (turbine) speed/Intermediate shaft speed	1.49 to 1.63

ON malfunction:

Input (turbine) speed/Intermediate shaft speed	2.72 to 2.86

INSPECTION PROCEDURE

HINT:

Performing the ACTIVE TEST using the intelligent tester allows the relay, VSV, actuator and so on to operate without parts removal. Performing the ACTIVE TEST as the first step of troubleshooting is one method to shorten labor time.

It is possible to display the DATA LIST during the ACTIVE TEST.

1. PERFORM ACTIVE TEST

(a) Warm up the engine.

(b) Turn the ignition switch off.

(c) Connect the OBD II scan tool or intelligent tester together with the CAN VIM (controller area network vehicle interface module) to the DLC3.

(d) Turn the ignition switch on (IG).

(e) Turn on the tester.

(f) Select the item "DIAGNOSIS / ENHANCED OBD II / ACTIVE TEST / SHIFT".

(g) According to the display on the tester, perform the "ACTIVE TEST".

HINT:

While driving, the shift position can be forcibly changed with the intelligent tester.

Comparing the shift position commanded by the ACTIVE TEST with the actual shift position enables you to confirm the problem (See page AX-29).

Item	Test Details	Diagnostic Note

SHIFT	[Test Details] Operate the shift solenoid valve and set each shift position by yourself. [Vehicle Condition] Less than 50 km/h (31 mph) [Others] • Press "←" button: Shift up • Press "→" button: Shift down	Possible to check the operation of the shift solenoid valves.

HINT:
- This test can be conducted when the vehicle speed is 50 km/h (31 mph) or less.
- The shift position commanded by the ECM is shown in the DATA LIST/SHIFT display on the intelligent tester.

1 CHECK OTHER DTCS OUTPUT (IN ADDITION TO DTC P0746)

(a) Connect the OBD II scan tool or intelligent tester together with the CAN VIM (controller area network vehicle interface module) to the DLC3.
(b) Turn the ignition switch on (IG) and turn the OBD II scan tool or the intelligent tester main switch ON.
(c) When you use intelligent tester:
Select the item "DIAGNOSIS / ENHANCED OBD II / DTC INFO / CURRENT CODES".
(d) Read the DTCs using the OBD II scan tool or the intelligent tester.

Result:

Display (DTC output)	Proceed to
Only "P0746" is output	A
"P0746" and other DTCs	B

HINT:
If any other codes besides "P0746" are output, perform the troubleshooting for those DTCs first.

B → **GO TO DTC CHART**

A

AX

2	INSPECT SHIFT SOLENOID VALVE (SL1)

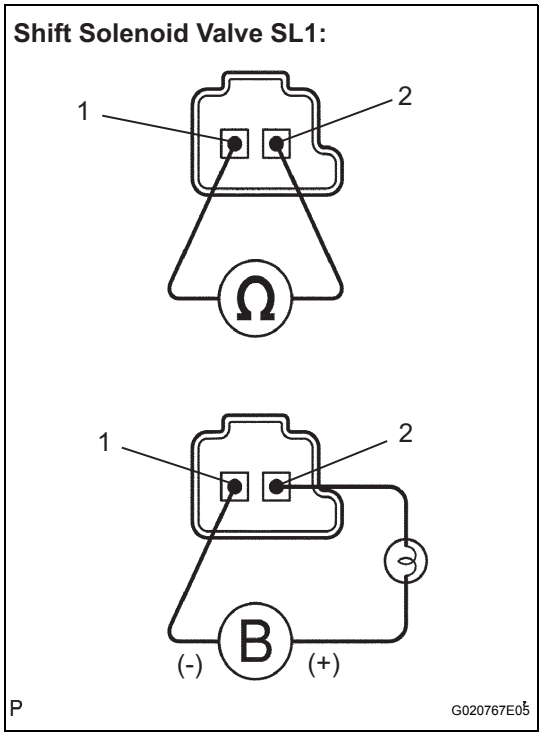

(a) Remove the shift solenoid valve SL1.
(b) Measure the resistance according to the value(s) in the table below.

Resistance

Tester Connection	Specified Condition 20°C (68°F)
1 - 2	5.0 to 5.6 Ω

(c) Connect the positive (+) lead with a 21 W bulb to terminal 2 and the negative (-) lead to terminal 1 of the solenoid valve connector, then check the movement of the valve.

OK:

The solenoid makes an operating sound.

NG → **REPLACE SHIFT SOLENOID VALVE (SL1)**

OK

3	INSPECT TRANSMISSION VALVE BODY ASSEMBLY

OK:

There are no foreign objects on each valve.

NG → **REPAIR OR REPLACE TRANSMISSION VALVE BODY ASSEMBLY**

OK

4	INSPECT TORQUE CONVERTER CLUTCH ASSEMBLY

OK:

The torque converter clutch operates normally.

NG → **REPLACE TORQUE CONVERTER CLUTCH ASSEMBLY**

OK

REPAIR OR REPLACE AUTOMATIC TRANSAXLE ASSEMBLY

DTC	P0748	Pressure Control Solenoid "A" Electrical (Shift Solenoid Valve SL1)

DESCRIPTION

Shifting from 1st to 5th is performed in combination with "ON" and "OFF" operation of the shift solenoid valves SL1, SL2, SL3, S4 and SR which are controlled by the ECM. If an open or short circuit occurs in either of the shift solenoid valves, the ECM controls the remaining normal shift solenoid valves to allow the vehicle to be operated smoothly (Fail safe function).

DTC No.	DTC Detection Condition	Trouble Area
P0748	The ECM checks for an open or short in the shift solenoid valve SL1 circuit while driving and shift gears. (1-trip detection logic) • Output signal duty equals to 100 %. (NOTE: SL1 output signal duty is less than 100 % under normal condition.)	• Open or short in shift solenoid valve SL1 circuit • Shift solenoid valve SL1 • ECM

MONITOR DESCRIPTION

The ECM commands gear shifts by turning the shift solenoid valves "ON/OFF". When there is an open or short circuit in any shift solenoid valve circuit, the ECM detects the problem and illuminates the MIL and stores the DTC. And the ECM performs the fail-safe function and turns the other normal shift solenoid valves "ON/OFF" (In case of an open or short circuit, the ECM stops sending current to the circuit.)
(See page AX-29).

MONITOR STRATEGY

Related DTCs	P0748: Shift solenoid valve SL1/Range check
Required sensors/Components	Shift solenoid valve SL1
Frequency of operation	Continuous
Duration	1 sec.
MIL operation	Immediate
Sequence of operation	None

AX

TYPICAL ENABLING CONDITIONS

The monitor will run whenever this DTC is not present.	None
Battery voltage	10 V or more
Ignition switch	ON
Starter	OFF

TYPICAL MALFUNCTION THRESHOLDS

Output signal duty	100%

COMPONENT OPERATING RANGE

Output signal duty	Less than 100%

WIRING DIAGRAM

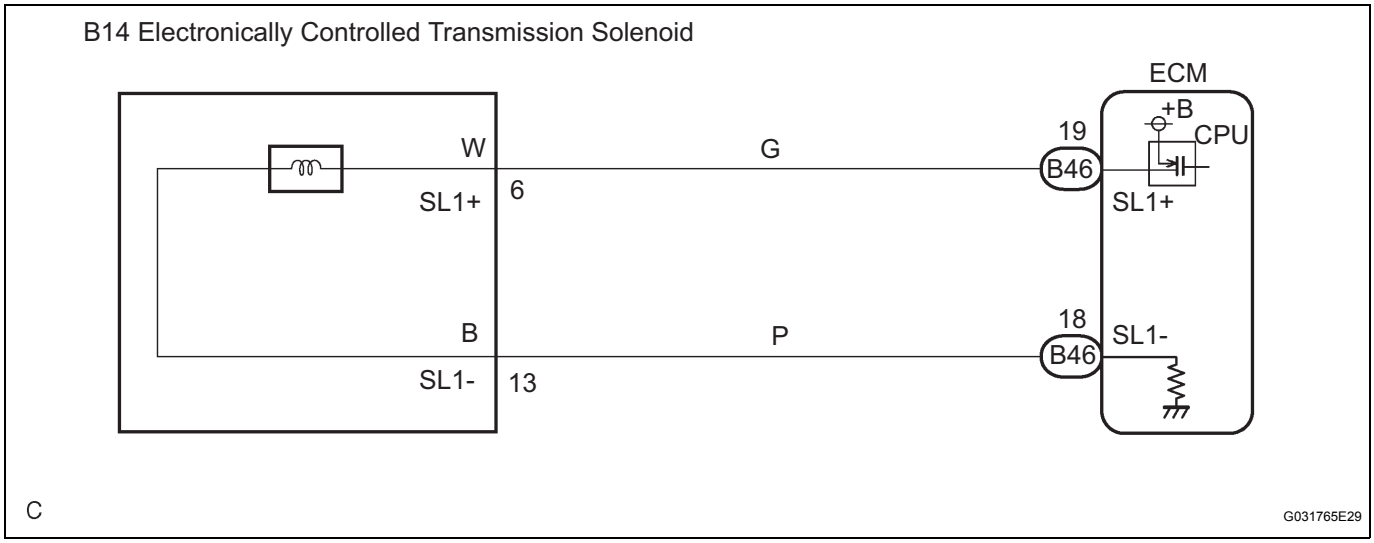

INSPECTION PROCEDURE

1	INSPECT TRANSMISSION WIRE (SL1)

Transmission Wire Side:

(Connector Front View):

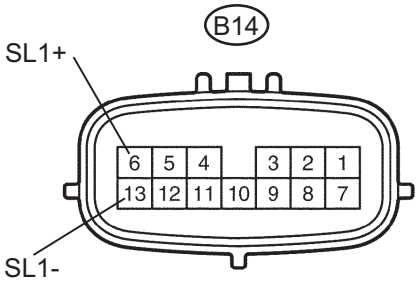

(a) Disconnect the transmission wire connector from the transaxle.

(b) Measure the resistance according to the value(s) in the table below.

Resistance

Tester Connection	Specified Condition 20°C (68°F)
6 (SL1+) - 13 (SL1-)	5.0 to 5.6 Ω

(c) Measure the resistance according to the value(s) in the table below.

Resistance (Check for short)

Tester Connection	Specified Condition
SL1+ - Body ground	10 kΩ or higher
SL1- - Body ground	↑

NG → **Go to step 3**

OK

AX

2 CHECK HARNESS AND CONNECTOR (TRANSMISSION WIRE - ECM)

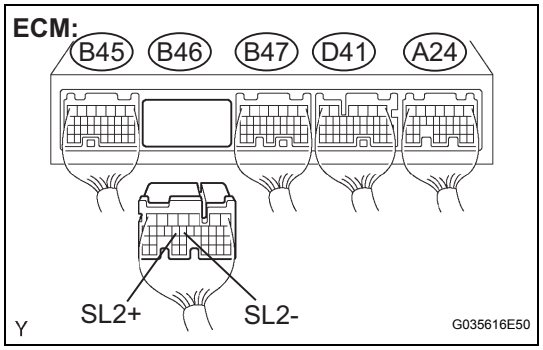

(a) Connect the transmission connector to the transaxle.
(b) Disconnect the connector from the ECM.
(c) Measure the resistance according to the value(s) in the table below.
Resistance

Tester Connection	Specified Condition 20°C (68°F)
B46 - 19 (SL1+) - B46 - 18 (SL1-)	5.0 to 5.6 Ω

(d) Measure the resistance according to the value(s) in the table below.
Resistance (Check for short)

Tester Connection	Specified Condition
B46 - 19 (SL1+) - Body ground	10 kΩ or higher
B46 - 18 (SL1-) - Body ground	

NG → **REPAIR OR REPLACE HARNESS OR CONNECTOR**

OK

REPLACE ECM

3 INSPECT SHIFT SOLENOID VALVE (SL1)

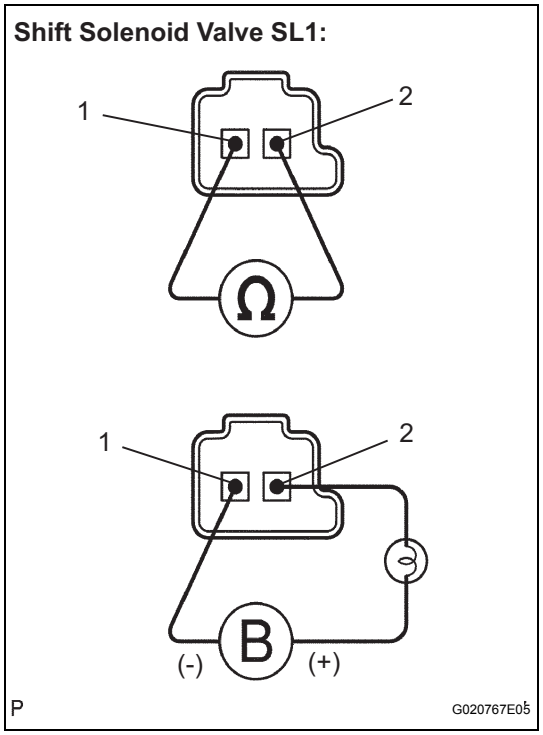

(a) Remove the shift solenoid valve SL1.
(b) Measure the resistance according to the value(s) in the table below.
Resistance

Tester Connection	Specified Condition 20°C (68°F)
1 - 2	5.0 to 5.6 Ω

(c) Connect the positive (+) lead with a 21 W bulb to terminal 2 and the negative (-) lead to terminal 1 of the solenoid valve connector, then check the movement of the valve.
OK:
The solenoid makes an operating sound.

NG → **REPLACE SHIFT SOLENOID VALVE (SL1)**

AX

OK

REPAIR OR REPLACE TRANSMISSION WIRE

DTC	P0766	Shift Solenoid "D" Performance (Shift Solenoid Valve S4)

SYSTEM DESCRIPTION

The ECM uses signals from the vehicle speed sensor to detect the actual gear position (1st, 2nd, 3rd, 4th or 5th gear).
Then the ECM compares the actual gear with the shift schedule in the ECM memory to detect mechanical problems of the shift solenoid valves, valve body or automatic transaxle (clutch, brake or gear etc.).

DTC No.	DTC Detecting Condition	Trouble Area
P0766	The gear required by the ECM does not match the actual gear when driving (2-trip detection logic)	• Shift solenoid valve S4 remains open or closed • Valve body is blocked • Automatic transaxle (clutch, brake or gear etc.)

MONITOR DESCRIPTION

The ECM commands gear shifts by turning the shift solenoid valves "ON/OFF". According to the input shaft revolution, intermediate (counter) shaft revolution and output shaft revolution, the ECM detects the actual gear position (1st, 2nd, 3rd, 4th or 5th gear position). When the gear position commanded by the ECM and the actual gear position are not the same, the ECM illuminates the MIL and stores the DTC.

MONITOR STRATEGY

Related DTCs	P0766: Shift solenoid valve S4/OFF malfunction Shift solenoid valve S4/ON malfunction
Required sensors/Components	Shift solenoid valve S4, Speed sensor (NT), Speed sensor (NC), Crankshaft position sensor (NE)
Frequency of operation	Continuous
Duration	OFF malfunction (A) and ON malfunction (B) 1 sec. OFF malfunction (B) 1.2 sec. ON malfunction (A) 0.8 sec.
MIL operation	2 driving cycles
Sequence of operation	None

AX

TYPICAL ENABLING CONDITIONS

All:

The monitor will run whenever this DTC is not present.	P0115 - P0118 (ECT sensor) P0125 (Insufficient ECT for closed loop) P0500 (VSS) P0748, P0778, P0798 (Shift solenoid valve (range))
ECT (Engine coolant temperature)	10°C (50°F) or more
Transmission range	"D"
TFT (Transmission fluid temperature)	-20°C (-4°F) or more
TFT sensor circuit	Not circuit malfunction
ECT sensor circuit	Not circuit malfunction
Turbine speed sensor circuit	Not circuit malfunction
Intermediate shaft speed sensor circuit	Not circuit malfunction
Output speed sensor circuit	Not circuit malfunction
Shift solenoid valve SL1 circuit	Not circuit malfunction
Shift solenoid valve SL2 circuit	Not circuit malfunction
Shift solenoid valve SL3 circuit	Not circuit malfunction

Shift solenoid valve S4 circuit	Not circuit malfunction
Shift solenoid valve SR circuit	Not circuit malfunction
Shift solenoid valve DSL circuit	Not circuit malfunction
Electronic throttle system	Not circuit malfunction

OFF malfunction (A):

ECM selected gear	5th
Throttle valve opening angle	5% or more
Vehicle speed	10 km/h (6.2 mph) or more

OFF malfunction (B):

ECM lock-up command	ON
ECM selected gear	3rd, 4th or 5th
Throttle valve opening angle	10% or more
Vehicle speed	25 to 100 km/h (15.5 to 62.1 mph)

ON malfunction (A):

ECM selected gear	4th or 5th
Throttle valve opening angle	4.5% or more at engine speed 1,900 rpm (Varies with engine speed)

ON malfunction (B):

ECM selected gear	4th
Throttle valve opening angle	5% or more
Vehicle speed	10 km/h (6.2 mph) or more

TYPICAL MALFUNCTION THRESHOLDS

Either of the following conditions is met: OFF malfunction (A) and (B), or ON malfunction (A) and (B)

2 detections are necessary per driving cycle:
1st detection; temporary flag ON
2nd detection; pending fault code ON

AX

OFF malfunction (A):

Intermediate shaft speed/Output speed	1.44 to 1.58

OFF malfunction (B):

Difference between engine speed and input (turbine) speed	Less than 35 rpm

ON malfunction (A):

Input (turbine) speed/Intermediate shaft speed	0.64 to 0.74

ON malfunction (B):

Intermediate shaft speed/Output speed	1.02 to 1.16

INSPECTION PROCEDURE

HINT:
Performing the ACTIVE TEST using the intelligent tester allows the relay, VSV, actuator and so on to operate without parts removal. Performing the ACTIVE TEST as the first step of troubleshooting is one method to shorten labor time.
It is possible to display the DATA LIST during the ACTIVE TEST.

1. PERFORM ACTIVE TEST

(a) Warm up the engine.
(b) Turn the ignition switch off.

(c) Connect the OBD II scan tool or intelligent tester together with the CAN VIM (controller area network vehicle interface module) to the DLC3.
(d) Turn the ignition switch on (IG).
(e) Turn on the tester.
(f) Select the item "DIAGNOSIS / ENHANCED OBD II / ACTIVE TEST / SHIFT".
(g) According to the display on the tester, perform the "ACTIVE TEST".

HINT:
While driving, the shift position can be forcibly changed with the intelligent tester.
Comparing the shift position commanded by the ACTIVE TEST with the actual shift position enables you to confirm the problem (See page AX-29).

Item	Test Details	Diagnostic Note
SHIFT	[Test Details] Operate the shift solenoid valve and set each shift position by yourself. [Vehicle Condition] Less than 50 km/h (31 mph) [Others] • Press "→" button: Shift up • Press "←" button: Shift down	Possible to check the operation of the shift solenoid valves.

HINT:
- This test can be conducted when the vehicle speed is 50 km/h (31 mph) or less.
- The shift position commanded by the ECM is shown in the DATA LIST/SHIFT display on the intelligent tester.

1 CHECK OTHER DTCS OUTPUT (IN ADDITION TO DTC P0766)

(a) Connect the OBD II scan tool or intelligent tester together with the CAN VIM (controller area network vehicle interface module) to the DLC3.
(b) Turn the ignition switch on (IG) and turn the OBD II scan tool or the intelligent tester main switch ON.
(c) Select the item "DIAGNOSIS / ENHANCED OBD II / DTC INFO / CURRENT CODES".
(d) Read the DTCs using the OBD II scan tool or the intelligent tester.

AX

Result:

Display (DTC output)	Proceed to
Only "P0766" is output	A
"P0766" and other DTCs	B

HINT:
If any other codes besides "P0766" are output, perform the troubleshooting for those DTCs first.

B → GO TO DTC CHART

A

2	INSPECT SHIFT SOLENOID VALVE S4

Shift Solenoid Valve S4:

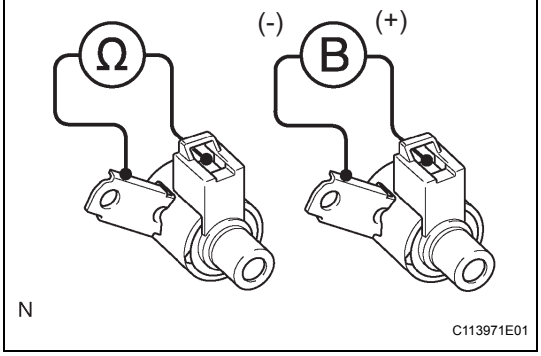

(a) Remove the shift solenoid valve S4.
(b) Measure the resistance according to the value(s) in the table below.

Resistance

Tester Connection	Specified Condition 20°C (68°F)
Solenoid Connector (S4) - Solenoid Body (S4)	11 to 15 Ω

(c) Connect the positive (+) lead to the terminal of the solenoid connector, and the negative (-) lead to the solenoid body.

OK:

The solenoid makes an operating sound.

NG → **REPLACE SHIFT SOLENOID VALVE (S4)**

OK

3	INSPECT TRANSMISSION VALVE BODY ASSEMBLY

OK:

There are no foreign objects on each valve.

NG → **REPAIR OR REPLACE TRANSMISSION VALVE BODY ASSEMBLY**

OK

AX

4	INSPECT TORQUE CONVERTER CLUTCH ASSEMBLY

OK:

The torque converter clutch operates normally.

NG → **REPLACE TORQUE CONVERTER CLUTCH ASSEMBLY**

OK

REPAIR OR REPLACE AUTOMATIC TRANSAXLE ASSEMBLY

DTC	P0771	Shift Solenoid "E" Performance (Shift Solenoid Valve SR)

SYSTEM DESCRIPTION

The ECM uses signals from the vehicle speed sensor to detect the actual gear position (1st, 2nd, 3rd, 4th or 5th gear).
Then the ECM compares the actual gear with the shift schedule in the ECM memory to detect mechanical problems of the shift solenoid valves, valve body or automatic transaxle (clutch, brake or gear etc.).

DTC No.	DTC Detecting Condition	Trouble Area
P0771	The gear required by the ECM does not match the actual gear when driving (2-trip detection logic)	• Shift solenoid valve SR remains open or closed • Valve body is blocked • Automatic transaxle (clutch, brake or gear etc.)

MONITOR DESCRIPTION

The ECM commands gear shifts by turning the shift solenoid valves "ON/OFF". According to the input shaft revolution, intermediate (counter) shaft revolution and output shaft revolution, the ECM detects the actual gear position (1st, 2nd, 3rd, 4th or 5th gear position). When the gear position commanded by the ECM and the actual gear position are not the same, the ECM illuminates the MIL and stores the DTC.

MONITOR STRATEGY

Related DTCs	P0771: Shift solenoid valve SR/Rationality check
Required sensors/Components	Shift solenoid valve SR, Speed sensor (NT), Speed sensor (NC), Crankshaft position sensor (NE)
Frequency of operation	Continuous
Duration	OFF malfunction (A) 1 sec. OFF malfunction (B) 3.5 sec. ON malfunction (A) Continuous ON malfunction (B) and (C) 0.8 sec.
MIL operation	2 driving cycles
Sequence of operation	None

TYPICAL ENABLING CONDITIONS

All:

The monitor will run whenever this DTC is not present	P0115 - P0118 (ECT sensor) P0125 (Insufficient ECT for closed loop) P0500 (VSS) P0748, P0778, P0798 (Shift solenoid valve (range))
ECT (Engine coolant temperature)	10°C (50°F) or more
Transmission range	"D"
TFT (Transmission fluid temperature)	-20°C (-4°F) or more
TFT sensor circuit	Not circuit malfunction
ECT sensor circuit	Not circuit malfunction
Turbine speed sensor circuit	Not circuit malfunction
Intermediate shaft speed sensor circuit	Not circuit malfunction
Output speed sensor circuit	Not circuit malfunction
Shift solenoid valve SL1 circuit	Not circuit malfunction
Shift solenoid valve SL2 circuit	Not circuit malfunction

AX

Shift solenoid valve SL3 circuit	Not circuit malfunction
Shift solenoid valve S4 circuit	Not circuit malfunction
Shift solenoid valve SR circuit	Not circuit malfunction
Shift solenoid valve DSL circuit	Not circuit malfunction
Electronic throttle system	Not circuit malfunction

OFF malfunction (A):

ECM selected gear	5th
Throttle valve opening angle	5% or more
Vehicle speed	10 km/h (6.2 mph) or more

OFF malfunction (B):

ECM lock-up command	ON
ECM selected gear	3rd, 4th or 5th
Vehicle speed	25 km/h (15.5 mph) or more

ON malfunction (A):

ECM lock-up command	OFF

ON malfunction (B):

ECM selected gear	1st
Vehicle speed	Less than 40 km/h (24.9 mph)
Throttle valve opening angle	4.5% or more at engine speed 1,900 rpm (Varies with engine speed)

ON malfunction (C):

ECM selected gear	3rd
Throttle valve opening angle	4.5% or more at engine speed 1,900 rpm (Varies with engine speed)

ON malfunction (D):

Duration time from shift command of ECM	15 sec. or more
ECM selected gear	4th or 5th

AX

TYPICAL MALFUNCTION THRESHOLDS

Either of the following conditions is met: OFF malfunction (A) and (B), or ON malfunction (A), (B), (C) and (D)

OFF malfunction (A):

Intermediate shaft speed/Output speed	1.44 to 1.58

OFF malfunction (B):

Engine speed - Input (turbine) speed	75 rpm or more

ON malfunction (A):

Difference between engine speed and input (turbine) speed	150 rpm or more

ON malfunction (B):

Input (turbine) speed/Intermediate shaft speed	0.93 to 1.07

ON malfunction (C):

Input (turbine) speed/Intermediate shaft speed	0.93 to 1.07

ON malfunction (D):

Input (turbine) speed/Intermediate shaft speed	0.64 to 0.74

INSPECTION PROCEDURE

HINT:
Performing the ACTIVE TEST using the intelligent tester allows the relay, VSV, actuator and so on to operate without parts removal. Performing the ACTIVE TEST as the first step of troubleshooting is one method to shorten labor time.
It is possible to display the DATA LIST during the ACTIVE TEST.

1. PERFORM ACTIVE TEST

(a) Warm up the engine.
(b) Turn the ignition switch off.
(c) Connect the OBD II scan tool or intelligent tester together with the CAN VIM (controller area network vehicle interface module) to the DLC3.
(d) Turn the ignition switch on (IG).
(e) Turn on the tester.
(f) Select the item "DIAGNOSIS / ENHANCED OBD II / ACTIVE TEST / SHIFT".
(g) According to the display on the tester, perform the "ACTIVE TEST".

HINT:
While driving, the shift position can be forcibly changed with the intelligent tester.
Comparing the shift position commanded by the ACTIVE TEST with the actual shift position enables you to confirm the problem (See page AX-29).

Item	Test Details	Diagnostic Note
SHIFT	[Test Details] Operate the shift solenoid valve and set each shift position by yourself. [Vehicle Condition] Less than 50 km/h (31 mph) [Others] • Press "→" button: Shift up • Press "←" button: Shift down	Possible to check the operation of the shift solenoid valves.

HINT:
- This test can be conducted when the vehicle speed is 50 km/h (31 mph) or less.
- The shift position commanded by the ECM is shown in the DATA LIST/SHIFT display on the intelligent tester.

AX

1	CHECK OTHER DTCS OUTPUT (IN ADDITION TO DTC P0771)

(a) Connect the OBD II scan tool or intelligent tester together with the CAN VIM (controller area network vehicle interface module) to the DLC3.
(b) Turn the ignition switch on (IG) and turn the OBD II scan tool or the intelligent tester main switch ON.
(c) When you use intelligent tester:
Select the item "DIAGNOSIS / ENHANCED OBD II / DTC INFO / CURRENT CODES".
(d) Read the DTCs using the OBD II scan tool or the intelligent tester.

Result:

Display (DTC output)	Proceed to
Only "P0771" is output	A
"P0771" and other DTCs	B

HINT:
If any other codes besides "P0771" are output, perform the troubleshooting for those DTCs first.

B	GO TO DTC CHART

A

2 INSPECT SHIFT SOLENOID VALVE (SR)

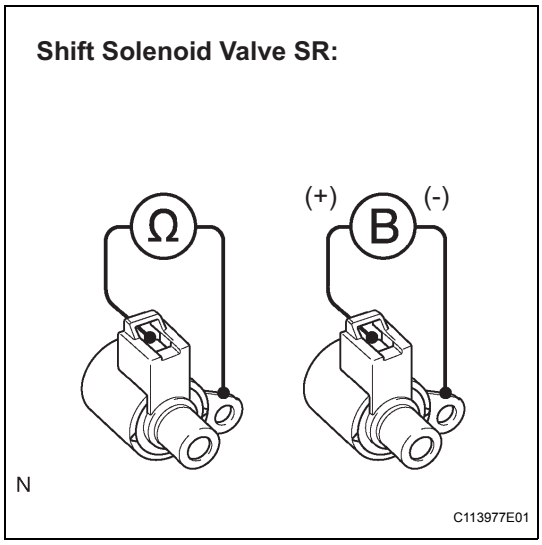

(a) Remove the shift solenoid valve SR.
(b) Measure the resistance according to the value(s) in the table below.
Resistance

Tester Connection	Specified Condition 20°C (68°F)
Solenoid Connector (SR) - Solenoid Body (SR)	11 to 15 Ω

(c) Connect positive (+) lead to the terminal of solenoid connector, negative (-) lead to the solenoid body.
OK:
The solenoid makes an operating sound.

NG → **REPLACE SHIFT SOLENOID VALVE (SR)**

OK

3 INSPECT TRANSMISSION VALVE BODY ASSEMBLY

OK:
There are no foreign objects on each valve.

NG → **REPAIR OR REPLACE TRANSMISSION VALVE BODY ASSEMBLY**

AX

OK

4 INSPECT TORQUE CONVERTER CLUTCH ASSEMBLY

OK:
The torque converter clutch operates normally.

NG → **REPLACE TORQUE CONVERTER CLUTCH ASSEMBLY**

OK

REPAIR OR REPLACE AUTOMATIC TRANSAXLE ASSEMBLY

DTC	P0776	Pressure Control Solenoid "B" Performance (Shift Solenoid Valve SL2)

SYSTEM DESCRIPTION

The ECM uses signals from the vehicle speed sensor to detect the actual gear position (1st, 2nd, 3rd, 4th or 5th gear).
Then the ECM compares the actual gear with the shift schedule in the ECM memory to detect mechanical problems of the shift solenoid valves, valve body or automatic transaxle (clutch, brake or gear etc.).

DTC No.	DTC Detecting Condition	Trouble Area
P0776	The gear required by the ECM does not match the actual gear when driving (2-trip detection logic)	• Shift solenoid valve SL2 remains open or closed • Valve body is blocked • Automatic transaxle (clutch, brake or gear etc.)

MONITOR DESCRIPTION

The ECM commands gear shifts by turning the shift solenoid valves "ON/OFF". According to the input shaft revolution, intermediate (counter) shaft revolution and output shaft revolution, the ECM detects the actual gear position (1st, 2nd, 3rd, 4th or 5th gear position). When the gear position commanded by the ECM and the actual gear position are not the same, the ECM illuminates the MIL and stores the DTC.

MONITOR STRATEGY

Related DTCs	P0776: Shift solenoid valve SL2/OFF malfunction Shift solenoid valve SL2/ON malfunction
Required sensors/Components	Shift solenoid valve SL2, Speed sensor (NT), Speed sensor (NC), Crannkshaft position sensor (NE)
Frequency of operation	Continuous
Duration	OFF malfunction (A) 1.8 sec. OFF malfunction (B) and (C) 0.8 sec. ON malfunction (A) and (B) 0.8 sec. ON malfunction (C) 0.4 sec.
MIL operation	2 driving cycles
Sequence of operation	None

AX

TYPICAL ENABLING CONDITIONS

All:

The monitor will run whenever this DTC is not present.	P0115 - P0118 (ECT sensor) P0125 (Insufficient ECT for closed loop) P0500 (VSS) P0748, P0778, P0798 (Shift solenoid valve (range))
ECT (Engine coolant temperature)	10°C (50°F) or more
Transmission range	"D"
TFT (Transmission fluid temperature)	-20°C (-4°F) or more
TFT sensor circuit	Not circuit malfunction
ECT sensor circuit	Not circuit malfunction
Turbine speed sensor circuit	Not circuit malfunction
Intermediate shaft speed sensor circuit	Not circuit malfunction
Output speed sensor circuit	Not circuit malfunction
Shift solenoid valve SL1 circuit	Not circuit malfunction
Shift solenoid valve SL2 circuit	Not circuit malfunction

Shift solenoid valve SL3 circuit	Not circuit malfunction
Shift solenoid valve S4 circuit	Not circuit malfunction
Shift solenoid valve SR circuit	Not circuit malfunction
Shift solenoid valve DSL circuit	Not circuit malfunction
Electronic throttle system	Not circuit malfunction

OFF malfunction (A):

ECM lock-up command	OFF
Vehicle speed	Less than 60 km/h (37.3 mph)
Throttle valve opening angle	7% or more

OFF malfunction (B):

ECM selected gear	1st
Vehicle speed	Less than 40 km/h (24.9 mph)
Throttle valve opening angle	4.5% or more at engine speed 1,900 rpm (Varies with engine speed)

OFF malfunction (C):

ECM selected gear	3rd
Throttle valve opening angle	4.5% or more at engine speed 1,900 rpm (Varies with engine speed)

OFF malfunction (D):

Duration time from shift command of ECM	15 sec. or more
ECM selected gear	4th or 5th

ON malfunction (A):

ECM selected gear	1st
Vehicle speed	Less than 40 km/h (24.9 mph)
Throttle valve opening angle	4.5% or more at engine speed 1,900 rpm (Varies with engine speed)

ON malfunction (B):

ECM selected gear	3rd
Throttle valve opening angle	7.0% or more at output speed 1,400 rpm (Varies with engine speed)
Malfunction of pressure control solenoid "B" (SL2) and "C" (SL3)	Not detected

ON malfunction (C):

Throttle valve opening angle	7.0% or more at output speed 1,050 rpm (Varies with engine speed)
Malfunction of pressure control solenoid "B" (SL2)	Not detected

TYPICAL MALFUNCTION THRESHOLDS

Either of the following conditions is met: OFF malfunction (A), (B), (C) and (D), or ON malfunction (A), (B) and (C)

OFF malfunction (A):

Difference between engine speed and input (turbine) speed	Less than 35 rpm

OFF malfunction (B) and (C):

Input (turbine) speed/Intermediate shaft speed	0.93 to 1.07

OFF malfunction (D):

Input (turbine) speed/Intermediate shaft speed	0.64 to 0.74

ON malfunction (A):

Input (turbine) speed/Intermediate shaft speed	2.72 to 2.86

ON malfunction (B):

Input (turbine) speed - Intermediate shaft speed	700 rpm or more

ON malfunction (C):

Input (turbine) speed - Intermediate shaft speed	Less than -500 rpm or 700 rpm or more

INSPECTION PROCEDURE

HINT:
Performing the ACTIVE TEST using the intelligent tester allows the relay, VSV, actuator and so on to operate without parts removal. Performing the ACTIVE TEST as the first step of troubleshooting is one method to shorten labor time.
It is possible to display the DATA LIST during the ACTIVE TEST.

1. PERFORM ACTIVE TEST

(a) Warm up the engine.
(b) Turn the ignition switch off.
(c) Connect the OBD II scan tool or intelligent tester together with the CAN VIM (controller area network vehicle interface module) to the DLC3.
(d) Turn the ignition switch on (IG).
(e) Turn on the tester.
(f) Select the item "DIAGNOSIS / ENHANCED OBD II / ACTIVE TEST / SHIFT".
(g) According to the display on the tester, perform the "ACTIVE TEST".

HINT:
While driving, the shift position can be forcibly changed with the intelligent tester.
Comparing the shift position commanded by the ACTIVE TEST with the actual shift position enables you to confirm the problem (See page AX-29).

Item	Test Details	Diagnostic Note
SHIFT	[Test Details] Operate the shift solenoid valve and set the each shift position by yourself. [Vehicle Condition] Less than 50 km/h (31 mph) [Others] • Press "→" button: Shift up • Press "←" button: Shift down	Possible to check the operation of the shift solenoid valves.

HINT:
- This test can be conducted when the vehicle speed is 50 km/h (31 mph) or less.
- The shift position commanded by the ECM is shown in the DATA LIST/SHIFT display on the intelligent tester.

1	**CHECK OTHER DTCS OUTPUT (IN ADDITION TO DTC P0776)**

(a) Connect the OBD II scan tool or intelligent tester together with the CAN VIM (controller area network vehicle interface module) to the DLC3.
(b) Turn the ignition switch on (IG) and turn the OBD II scan tool or the intelligent tester main switch ON.
(c) When you use intelligent tester:
Select the item "DIAGNOSIS / ENHANCED OBD II / DTC INFO / CURRENT CODES".

AX

(d) Read the DTCs using the OBD II scan tool or the intelligent tester.

Result:

Display (DTC output)	Proceed to
Only "P0776" is output	A
"P0776" and other DTCs	B

HINT:
If any other codes besides "P0776" are output, perform the troubleshooting for those DTCs first.

B → **GO TO DTC CHART**

A

2 INSPECT SHIFT SOLENOID VALVE (SL2)

Shift Solenoid Valve SL2:

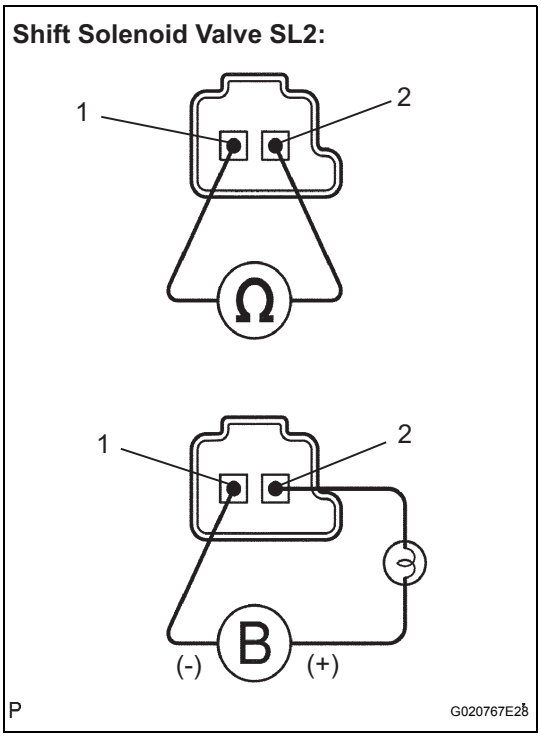

(a) Remove the shift solenoid valve SL2.
(b) Measure the resistance according to the value(s) in the table below.

Resistance

Tester Connection	Specified Condition 20°C (68°F)
1 - 2	5.0 to 5.6 Ω

(c) Connect the positive (+) lead with a 21 W bulb to terminal 2 and the negative (-) lead to terminal 1 of the solenoid valve connector, then check the movement of the valve.

OK:
The solenoid makes an operating sound.

NG → **REPLACE SHIFT SOLENOID VALVE (SL2)**

AX

OK

3 INSPECT TRANSMISSION VALVE BODY ASSEMBLY

OK:
There are no foreign objects on each valve.

NG → **REPAIR OR REPLACE TRANSMISSION VALVE BODY ASSEMBLY**

OK

4	INSPECT TORQUE CONVERTER CLUTCH ASSEMBLY

OK:

The torque converter clutch operates normally.

NG → **REPLACE TORQUE CONVERTER CLUTCH ASSEMBLY**

OK

REPAIR OR REPLACE AUTOMATIC TRANSAXLE ASSEMBLY

DTC	P0778	Pressure Control Solenoid "B" Electrical (Shift Solenoid Valve SL2)

DESCRIPTION

Shifting from 1st to 5th is performed in combination with "ON" and "OFF" operation of the shift solenoid valves SL1, SL2, SL3, S4 and SR which are controlled by the ECM. If an open or short circuit occurs in either of the shift solenoid valves, the ECM controls the remaining normal shift solenoid valves to allow the vehicle to be operated smoothly (Fail safe function).

DTC No.	DTC Detection Condition	Trouble Area
P0778	ECM checks for an open or short circuit in shift solenoid valves SL2 (1-trip detection logic) Hybrid IC for solenoid indicates fail.	• Open or short in shift solenoid valve SL2 circuit • Shift solenoid valve SL2 • ECM

MONITOR DESCRIPTION

The ECM commands gear shifts by turning the shift solenoid valves "ON/OFF". When there is an open or short circuit in any shift solenoid valve circuit, the ECM detects the problem and illuminates the MIL and stores the DTC. And the ECM performs the fail-safe function and turns the other normal shift solenoid valves "ON/OFF" (In case of an open or short circuit, the ECM stops sending current to the circuit.)
(See page AX-29).

MONITOR STRATEGY

Related DTCs	P0778: Shift solenoid valve SL2/Range check
Required sensors/Components	Shift solenoid valve SL2
Frequency of operation	Continuous
Duration	1 sec.
MIL operation	Immediate
Sequence of operation	None

AX

TYPICAL ENABLING CONDITIONS

The monitor will run whenever this DTC is not present.	None
Solenoid current cut status	Not cut
Battery voltage	11 V or more
Ignition switch	ON
Starter	OFF
CPU commanded duty ratio to SL2	19% or more

TYPICAL MALFUNCTION THRESHOLDS

Solenoid status from IC	Fail (Open or short)

COMPONENT OPERATING RANGE

Output signal duty	Less than 100%

WIRING DIAGRAM

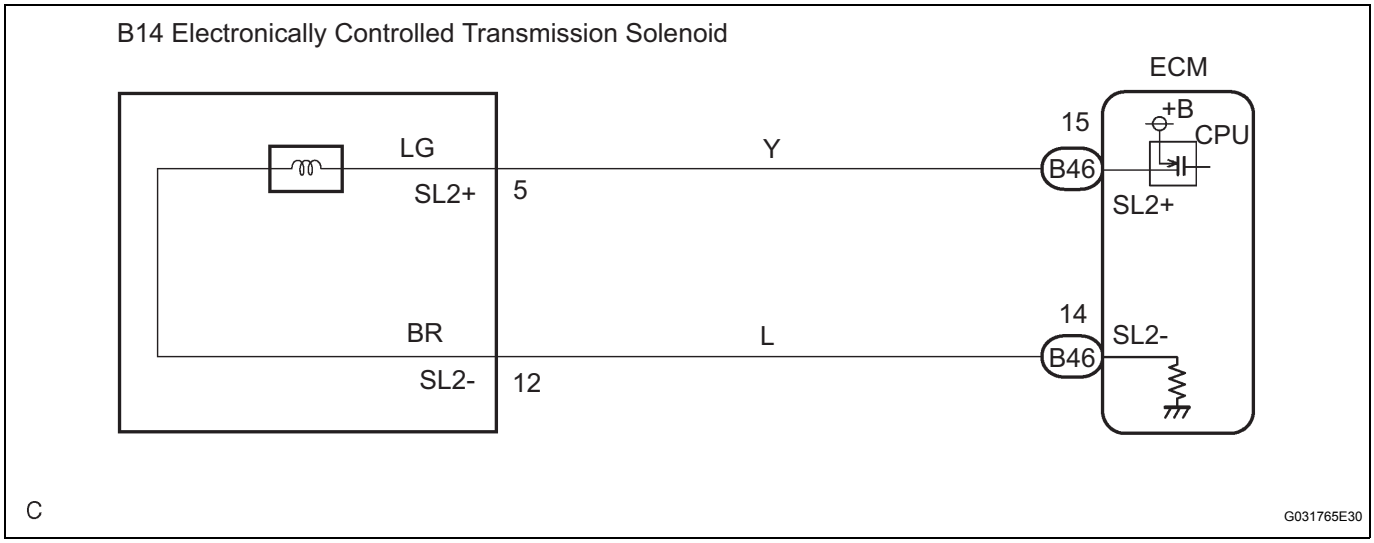

INSPECTION PROCEDURE

1	INSPECT TRANSMISSION WIRE (SL2)

Transmission Wire Side:

(Connector Front View):

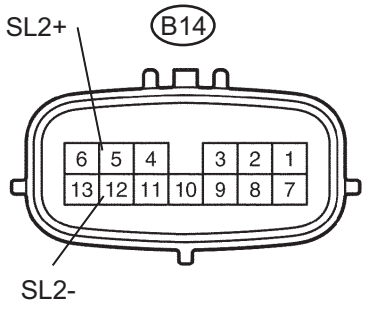

(a) Disconnect the transmission wire connector from the transaxle.

(b) Measure the resistance according to the value(s) in the table below.

Resistance

Tester Connection	Specified Condition 20°C (68°F)
5 (SL2+) - 12 (SL2-)	5.0 to 5.6 Ω

(c) Measure the resistance according to the value(s) in the table below.

OK

Resistance (Check for short):

Tester Connection	Specified Condition
5 (SL2+) - Body ground	10 kΩ or higher
12 (SL2-) - Body ground	↑

NG → **Go to step 3**

OK

AX

2	CHECK HARNESS AND CONNECTOR (TRANSMISSION WIRE - ECM)

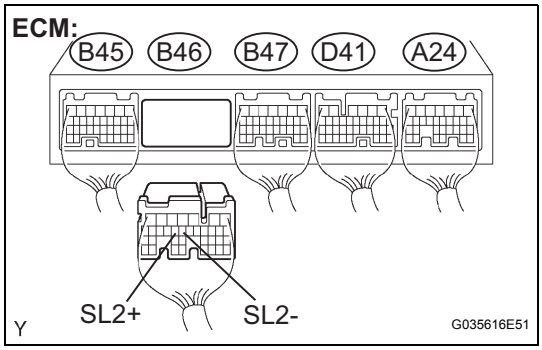

(a) Connect the transmission connector to the transaxle.
(b) Disconnect the connector from the ECM.
(c) Measure the resistance according to the value(s) in the table below.

Resistance

Tester Connection	Specified Condition 20°C (68°F)
B46 - 15 (SL2+) - B46 - 14 (SL2-)	5.0 to 5.6 Ω

(d) Measure the resistance according to the value(s) in the table below.

OK:

Resistance (Check for short)

Tester Connection	Specified Condition
B46 - 15 (SL2+) - Body ground	10 kΩ or higher
B46 - 14 (SL2-) - Body ground	

NG → **REPAIR OR REPLACE HARNESS OR CONNECTOR**

OK

REPLACE ECM

3	INSPECT SHIFT SOLENOID VALVE (SL2)

AX

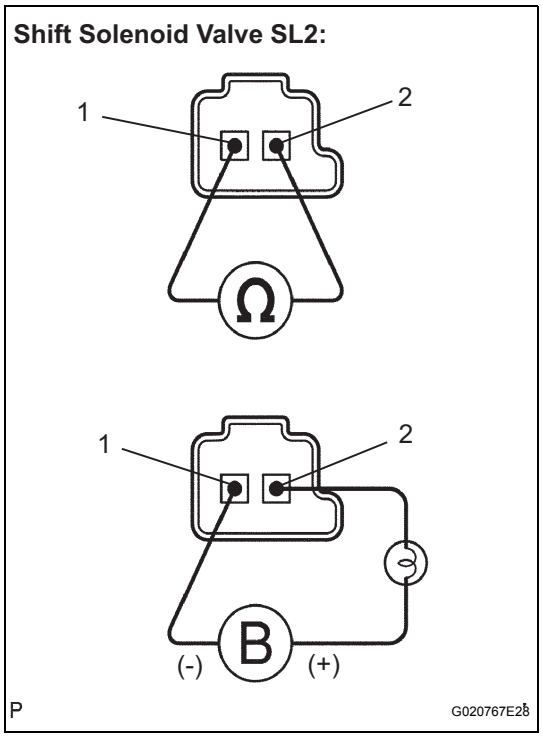

(a) Remove the shift solenoid valve SL2.
(b) Measure the resistance according to the value(s) in the table below.

Resistance

Tester Connection	Specified Condition 20°C (68°F)
1 - 2	5.0 to 5.6 Ω

(c) Connect the positive (+) lead with a 21 W bulb to terminal 2 and the negative (-) lead to terminal 1 of the solenoid valve connector, then check the movement of the valve.

OK:

The solenoid makes an operating sound.

NG → **REPLACE SHIFT SOLENOID VALVE (SL2)**

OK

REPAIR OR REPLACE TRANSMISSION WIRE

DTC	P0793	Intermediate Shaft Speed Sensor "A"

DESCRIPTION

This sensor detects the rotation speed of the counter gear. By comparing the counter gear speed signal (NC) with the direct clutch speed sensor signal (NT), the ECM detects the shift timing of the gears and appropriately controls the engine torque and hydraulic pressure according to various conditions. Thus smooth gear shifting is performed.

DTC No.	DTC Detection Condition	Trouble Area
P0793	ECM detects conditions (a), (b) and (c) continuously for 5 sec. or more: (1-trip detection logic) (a) Vehicle speed: 50 km/h (31 mph) or more (b) Park/neutral position switch (STAR) is OFF (c) Speed sensor (NC): less than 300 rpm	• Open or short in transmission revolution sensor NC (speed sensor NC) circuit • Transmission revolution sensor NC (speed sensor NC) • ECM

Reference (Using an oscilloscope):
Check the waveform between terminals NC+ and NC- of the ECM connector.

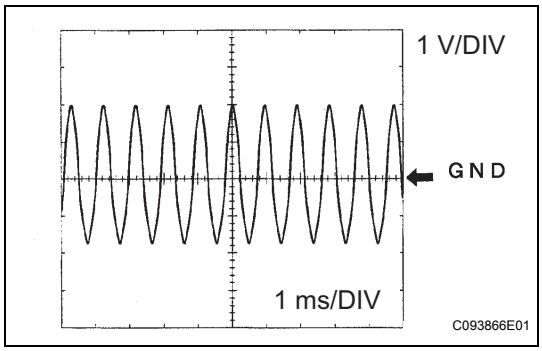

Standard: Refer to the illustration.

Terminal	**NC+ - NC-**
Tool setting	**1 V/DIV, 1ms/DIV**
Vehicle condition	**Vehicle speed 30 km/h (19 mph): (3rd gear) Engine speed 1,400 rpm**

AX

MONITOR DESCRIPTION

The NC terminal of the ECM detects a revolution signal from the speed sensor (NC) (counter gear rpm). The ECM calculates a gearshift comparing the speed sensor (NT) with the speed sensor (NC).
While the vehicle is operating in 2nd, 3rd, 4th or 5th gear in the shift position of D, if the counter gear revolution is less than 300 rpm *1although the output shaft revolution is more than 1,000 rpm *2, the ECM detects the trouble, illuminates the MIL and stores the DTC.
*1: Pulse is not output or is irregularly output.
*2: The vehicle speed is 50 km/h (31 mph) or more.

MONITOR STRATEGY

Related DTCs	P0793: Speed sensor (NC)/Verify pulse input
Required sensors/Components	Speed sensor (NC), Speed sensor (NT), Park/neutral position switch
Frequency of operation	Continuous
Duration	5 sec.
MIL operation	Immediate
Sequence of operation	None

TYPICAL ENABLING CONDITIONS

The monitor will run whenever this DTC is not present.	P0500 (VSS) P0748, P0778, P0798 (Shift solenoid valve(range))
Engine	Running
NSW switch	OFF
Output shaft rpm	1,000 rpm or more
Battery voltage	8 V or more
Ignition switch	ON
Starter	OFF

TYPICAL MALFUNCTION THRESHOLDS

Sensor signal rpm	Less than 300 rpm

COMPONENT OPERATING RANGE

Counter gear speed sensor (NC)	HINT: 3rd when shift lever position is D position (After warming up the engine); • Intermediate shaft speed (NC) becomes close to the engine speed.

WIRING DIAGRAM

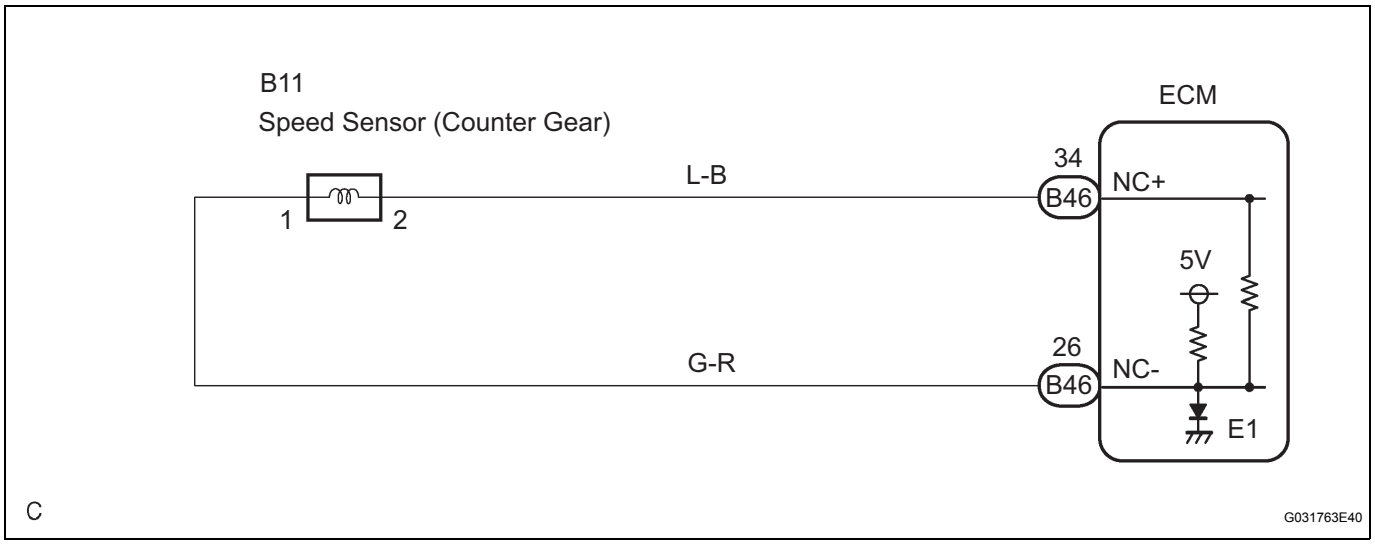

AX

INSPECTION PROCEDURE

HINT:

According to the DATA LIST displayed by the OBD II scan tool or intelligent tester, you can read the value of the switch, sensor, actuator and so on without parts removal. Reading the DATA LIST as the first step of troubleshooting is one method to shorten labor time.

1. READ DATA LIST

(a) Warm up the engine.
(b) Turn the ignition switch off.
(c) Connect the OBD II scan tool or intelligent tester together with the CAN VIM (controller area network vehicle interface module) to the DLC3.
(d) Turn the ignition switch on (IG).
(e) Turn on the tester.
(f) Select the item "DIAGNOSIS / ENHANCED OBD II / DATA LIST".
(g) According to the display on the tester, read the "DATA LIST".

Item	Measurement Item/ Range (display)	Normal Condition
SPD (NC)	Counter Gear Speed/ display: 50 r/min	[HINT] 3rd when shift lever position is D position (After warming up the engine); • Intermediate shaft speed (NC) becomes close to the engine speed.

HINT:
- SPD (NC) is always 0 while driving:
  Open or short in the sensor or circuit.
- SPD (NC) is always more than 0 and less than 300 rpm while driving the vehicle at 50 km/h (31 mph) or more:
  Sensor trouble, improper installation, or intermittent connection trouble of the circuit.

1 INSPECT SPEED SENSOR INSTALLATION

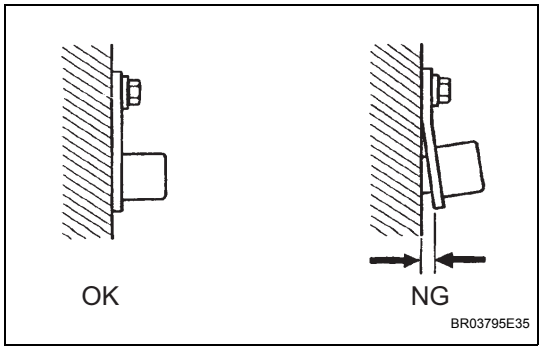

(a) Check the speed sensor installation.
OK:
The installation bolt is tightened properly and there is no clearance between the sensor and transaxle case.

NG → **REPLACE SPEED SENSOR (NC)**

OK

2 INSPECT SPEED SENSOR (NC)

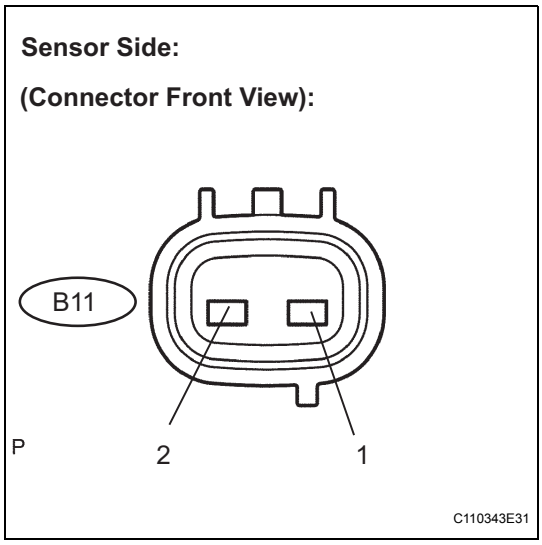

(a) Disconnect the speed sensor connector from the transaxle.
(b) Measure the resistance according to the value(s) in the table below.
Resistance

Tester Connection	Specified Condition 20 °C (68 °F)
1 - 2	560 to 680 Ω

NG → **REPLACE SPEED SENSOR (NC)**

OK

3	CHECK HARNESS AND CONNECTOR (SPEED SENSOR - ECM)

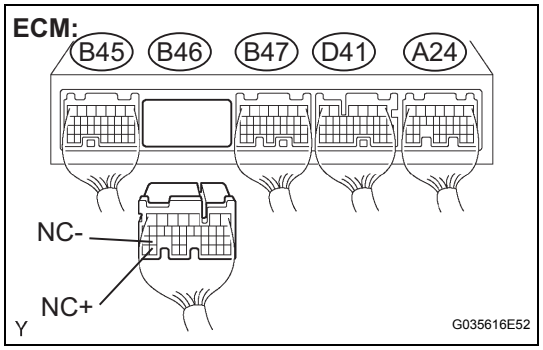

(a) Connect the speed sensor connector.
(b) Disconnect the ECM connector.
(c) Measure the resistance according to the value(s) in the table below.

Resistance

Tester Connection	Specified Condition 20 °C (68 °F)
B46 - 34 (NC+) - B46 - 26 (NC-)	560 to 680 Ω

(d) Measure the resistance according to the value(s) in the table below.

Resistance (Check for short)

Tester Connection	Specified Condition
B46 - 34 (NC+) - Body ground	10 kΩ or higher
B46 - 26 (NC-) - Body ground	

NG → REPAIR OR REPLACE HARNESS OR CONNECTOR

OK

REPLACE ECM

AX

DTC	P0796	Pressure Control Solenoid "C" Performance (Shift Solenoid Valve SL3)

SYSTEM DESCRIPTION

The ECM uses signals from the vehicle speed sensor to detect the actual gear position (1st, 2nd, 3rd, 4th or 5th gear).
Then the ECM compares the actual gear with the shift schedule in the ECM memory to detect mechanical troubles of the shift solenoid valves and valve body.

DTC No.	DTC Detecting Condition	Trouble Area
P0796	The gear required by the ECM does not match the actual gear when driving (2-trip detection logic)	• Shift solenoid valve SL3 remains open or closed • Valve body is blocked • Automatic transaxle (clutch, brake or gear etc.)

MONITOR DESCRIPTION

The ECM commands gear shifts by turning the shift solenoid valves "ON/OFF". According to the input shaft revolution, intermediate (counter) shaft revolution and output shaft revolution, the ECM detects the actual gear position (1st, 2nd, 3rd, 4th or 5th gear position). When the gear position commanded by the ECM and the actual gear position are not the same, the ECM illuminates the MIL and stores the DTC.

MONITOR STRATEGY

Related DTCs	P0796: Shift solenoid valve SL3/OFF malfunction Shift solenoid valve SL3/ON malfunction
Required sensors/Components	Shift solenoid valve SL3, Speed sensor (NT), Speed sensor (NC), Crankshaft position sensor (NE)
Frequency of operation	Continuous
Duration	OFF malfunction (A) 0.8 sec. OFF malfunction (B) 1 sec. ON malfunction (A) and (B) 0.8 sec. ON malfunction (C) 0.4 sec.
MIL operation	2 driving cycles
Sequence of operation	None

AX

TYPICAL ENABLING CONDITIONS

All:

The monitor will run whenever this DTC is not present.	P0115 - P0118 (ECT sensor) P0125 (Insufficient ECT for closed loop) P0500 (VSS) P0748, P0778, P0798 (Shift solenoid valve (range))
ECT (Engine coolant temperature)	10°C (50°F) or more
Transmission range	"D"
TFT (Transmission fluid temperature)	-20°C (-4°F) or more
TFT sensor circuit	Not circuit malfunction
ECT sensor circuit	Not circuit malfunction
Turbine speed sensor circuit	Not circuit malfunction
Intermediate shaft speed sensor circuit	Not circuit malfunction
Output speed sensor circuit	Not circuit malfunction
Shift solenoid valve SL1 circuit	Not circuit malfunction
Shift solenoid valve SL2 circuit	Not circuit malfunction

Shift solenoid valve SL3 circuit	Not circuit malfunction
Shift solenoid valve S4 circuit	Not circuit malfunction
Shift solenoid valve SR circuit	Not circuit malfunction
Shift solenoid valve DSL circuit	Not circuit malfunction
Electronic throttle system	Not circuit malfunction

OFF malfunction (A):

ECM selected gear	4th or 5th
Throttle valve opening angle	4.5% or more at engine speed 1,900 rpm (Varies with engine speed)

OFF malfunction (B):

ECM selected gear	4th
Throttle valve opening angle	5% or more
Vehicle speed	10 km/h (6.2 mph) or more

ON malfunction (A):

ECM selected gear	1st
Vehicle speed	Less than 40 km/h (24.9 mph)
Throttle valve opening angle	4.5% or more at engine speed 1,900 rpm (Varies with engine speed)

ON malfunction (B):

ECM selected gear	3rd
Throttle valve opening angle	7.0% or more at output speed 1,400 rpm (Varies with engine speed)
Malfunction of pressure control solenoid "B" (SL2) and "C" (SL3)	Not detected

ON malfunction (C):

Throttle valve opening angle	7.0% or more at output speed 1,050 rpm (Varies with engine speed)
Malfunction of pressure control solenoid "B" (SL2)	Not detected

AX

TYPICAL MALFUNCTION THRESHOLDS

Either of the following conditions is met: OFF malfunction (A) and (B), or ON malfunctions (A), (B) and (C)

2 detections are necessary per driving cycle:

1st detection; temporary flag ON

2nd detection; pending fault code ON

OFF malfunction (A):

Input (turbine) speed/Intermediate shaft speed	0.93 to 1.07

OFF malfunction (B):

Intermediate shaft speed/Output speed	1.02 to 1.16

ON malfunction (A):

Input (turbine) speed/Intermediate shaft speed	0.93 to 1.07

ON malfunction (B):

Input (turbine) speed - Intermediate shaft speed	700 rpm or more

ON malfunction (C):

Input (turbine) speed - Intermediate shaft speed	Less than -500 rpm or 700 rpm or more

INSPECTION PROCEDURE

HINT:
Performing the ACTIVE TEST using the intelligent tester allows the relay, VSV, actuator and so on to operate without parts removal. Performing the ACTIVE TEST as the first step of troubleshooting is one method to shorten labor time.
It is possible to display the DATA LIST during the ACTIVE TEST.

1. PERFORM ACTIVE TEST

(a) Warm up the engine.
(b) Turn the ignition switch off.
(c) Connect the OBD II scan tool or intelligent tester together with the CAN VIM (controller area network vehicle interface module) to the DLC3.
(d) Turn the ignition switch on (IG).
(e) Turn on the tester.
(f) Select the item "DIAGNOSIS / ENHANCED OBD II / ACTIVE TEST / SHIFT".
(g) According to the display on the tester, perform the "ACTIVE TEST".

HINT:
While driving, the shift position can be forcibly changed with the intelligent tester.
Comparing the shift position commanded by the ACTIVE TEST with the actual shift position enables you to confirm the problem (See page AX-29).

Item	Test Details	Diagnostic Note
SHIFT	[Test Details] Operate the shift solenoid valve and set each shift position by yourself. [Vehicle Condition] Less than 50 km/h (31 mph) [Others] • Press "→" button: Shift up • Press "←" button: Shift down	Possible to check the operation of the shift solenoid valves.

HINT:
- This test can be conducted when the vehicle speed is 50 km/h (31 mph) or less.
- The shift position commanded by the ECM is shown in the DATA LIST/SHIFT display on the intelligent tester.

AX

1	CHECK OTHER DTCS OUTPUT (IN ADDITION TO DTC P0796)

(a) Connect the OBD II scan tool or intelligent tester together with the CAN VIM (controller area network vehicle interface module) to the DLC3.
(b) Turn the ignition switch on (IG) and turn the OBD II scan tool or the intelligent tester main switch ON.
(c) When you use intelligent tester:
Select the item "DIAGNOSIS / ENHANCED OBD II / DTC INFO / CURRENT CODES".
(d) Read the DTCs using the OBD II scan tool or the intelligent tester.

Result:

Display (DTC output)	Proceed to
Only "P0796" is output	A
"P0796" and other DTCs	B

HINT:
If any other codes besides "P0796" are output, perform the troubleshooting for those DTCs first.

B → GO TO DTC CHART

A

2 INSPECT SHIFT SOLENOID VALVE (SL3)

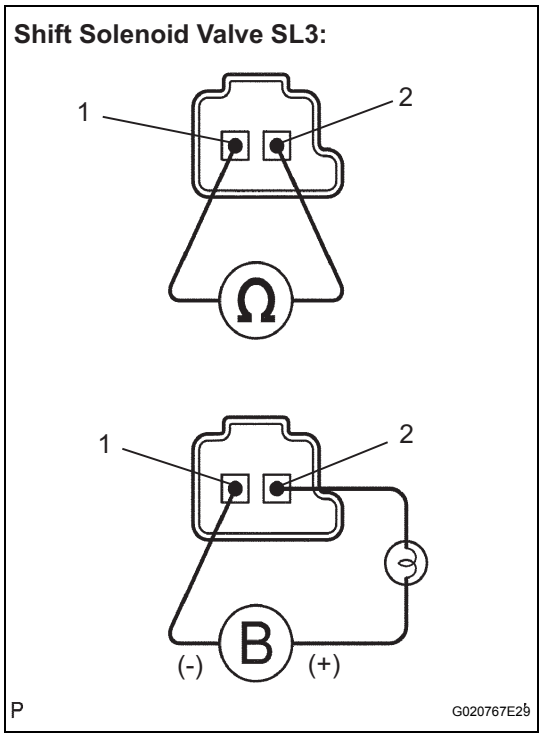

(a) Remove the shift solenoid valve SL3.
(b) Measure the resistance according to the value(s) in the table below.

Resistance

Tester Connection	Specified Condition 20°C (68°F)
1 - 2	5.0 to 5.6 Ω

(c) Connect the positive (+) lead with a 21 W bulb to terminal 2 and the negative (-) lead to terminal 1 of the solenoid valve connector, then check the movement of the valve.

OK:

The solenoid makes an operating sound.

NG → REPLACE SHIFT SOLENOID VALVE (SL3)

OK

3 INSPECT TRANSMISSION VALVE BODY ASSEMBLY

OK:

There are no foreign objects on each valve.

NG → REPAIR OR REPLACE TRANSMISSION VALVE BODY ASSEMBLY

OK

4 INSPECT TORQUE CONVERTER CLUTCH ASSEMBLY

OK:

The torque converter clutch operates normally.

NG → REPLACE TORQUE CONVERTER CLUTCH ASSEMBLY

OK

REPAIR OR REPLACE AUTOMATIC TRANSAXLE ASSEMBLY

AX

DTC	P0798	Pressure Control Solenoid "C" Electrical (Shift Solenoid Valve SL3)

DESCRIPTION

Shifting from 1st to 5th is performed in combination with "ON" and "OFF" operation of the shift solenoid valves SL1, SL2, SL3, S4 and SR which are controlled by the ECM. If an open or short circuit occurs in either of the shift solenoid valves, the ECM controls the remaining normal shift solenoid valves to allow the vehicle to be operated smoothly (Fail safe function).

DTC No.	DTC Detection Condition	Trouble Area
P0798	The ECM checks for an open or short in the shift solenoid valve SL3 circuit while driving and shifting gears. (1-trip detection logic) – Output signal duty equals to 100 %. (NOTE: SL3 output signal duty is less than 100 % under normal condition.)	• Open or short in shift solenoid valve SL3 circuit • Shift solenoid valve SL3 • ECM

MONITOR DESCRIPTION

The ECM commands gear shifts by turning the shift solenoid valves "ON/OFF". When there is an open or short circuit in any shift solenoid valve circuit, the ECM detects the problem and illuminates the MIL and stores the DTC. And the ECM performs the fail-safe function and turns the other normal shift solenoid valves "ON/OFF" (In case of an open or short circuit, the ECM stops sending current to the circuit.)
(See page AX-29).

MONITOR STRATEGY

Related DTCs	P0798: Shift solenoid valve SL3/Range check
Required sensors/Components	Shift solenoid valve SL3
Frequency of operation	Continuous
Duration	1 sec.
MIL operation	Immediate
Sequence of operation	None

AX

TYPICAL ENABLING CONDITIONS

The monitor will run whenever this DTC is not present.	None
Battery voltage	10 V or more
Ignition switch	ON
Starter	OFF

TYPICAL MALFUNCTION THRESHOLDS

Output signal duty	100%

COMPONENT OPERATING RANGE

Output signal duty	Less than 100%

WIRING DIAGRAM

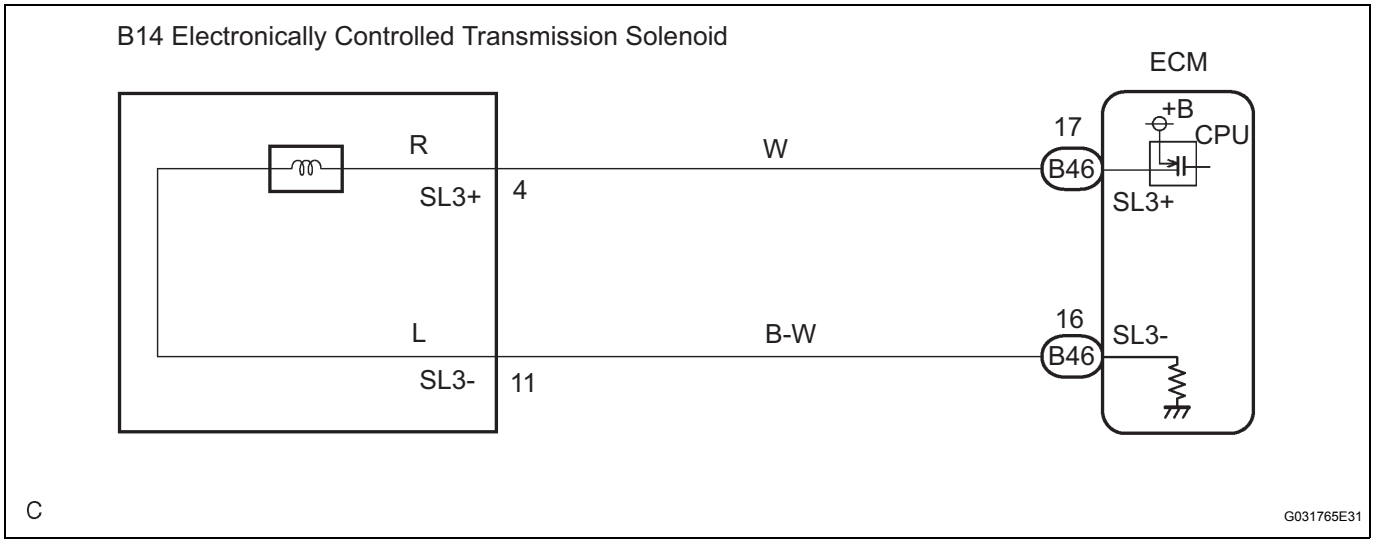

INSPECTION PROCEDURE

1	INSPECT TRANSMISSION WIRE (SL3)

Transmission Wire Side:

(Connector Front View):

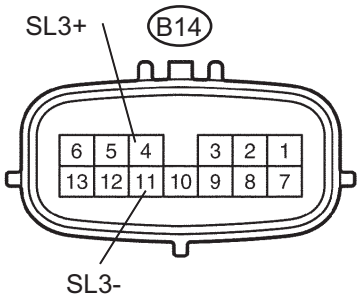

(a) Disconnect the transmission wire connector from the transaxle.

(b) Measure the resistance according to the value(s) in the table below.

Resistance

Tester Connection	Specified Condition 20°C (68°F)
4 (SL3+) - 11 (SL3-)	5.0 to 5.6 Ω

(c) Measure the resistance according to the value(s) in the table below.

Resistance (Check for short)

Tester Connection	Specified Condition
4 (SL3+) - Body ground	10 kΩ or higher
11 (SL3-) - Body ground	↑

NG → **Go to step 3**

OK

AX

2	CHECK HARNESS AND CONNECTOR (TRANSMISSION WIRE - ECM)

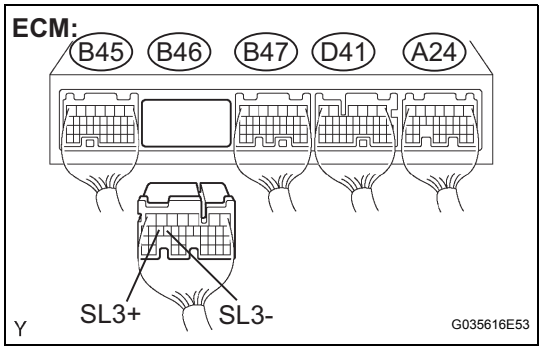

(a) Connect the transmission connector to the transaxle.
(b) Disconnect the connector from the ECM.
(c) Measure the resistance according to the value(s) in the table below.
Resistance

Tester Connection	Specified Condition 20°C (68°F)
B46 - 17 (SL3+) - B46 - 16 (SL3-)	5.0 to 5.6 Ω

(d) Measure the resistance according to the value(s) in the table below.
Resistance (Check for short)

Tester Connection	Specified Condition
B46 - 17 (SL3+) - Body ground	10 kΩ or higher
B46 - 16 (SL3-) - Body ground	

NG → **REPAIR OR REPLACE HARNESS OR CONNECTOR**

OK

REPLACE ECM

3	INSPECT SHIFT SOLENOID VALVE (SL3)

AX

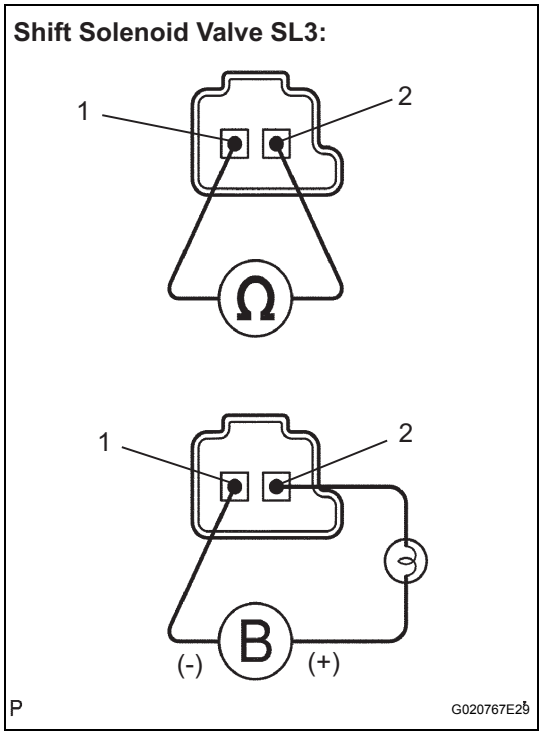

(a) Remove the shift solenoid valve SL3.
(b) Measure the resistance according to the value(s) in the table below.
Resistance

Tester Connection	Specified Condition 20°C (68°F)
1 - 2	5.0 to 5.6 Ω

(c) Connect the positive (+) lead with a 21 W bulb to terminal 2 and the negative (-) lead to terminal 1 of the solenoid valve connector, then check the movement of the valve.
OK:
The solenoid makes an operating sound.

NG → **REPLACE SHIFT SOLENOID VALVE (SL3)**

OK

REPAIR OR REPLACE TRANSMISSION WIRE

DTC	P0982	Shift Solenoid "D" Control Circuit Low (Shift Solenoid Valve S4)

DTC	P0983	Shift Solenoid "D" Control Circuit High (Shift Solenoid Valve S4)

DESCRIPTION

Shifting from 1st to 5th is performed in combination with "ON" and "OFF" operation of the shift solenoid valves SL1, SL2, SL3, S4 and SR which are controlled by the ECM. If an open or short circuit occurs in either of the shift solenoid valves, the ECM controls the remaining normal shift solenoid valves to allow the vehicle to be operated smoothly (Fail safe function).

DTC No.	DTC Detection Condition	Trouble Area
P0982	ECM detects short in solenoid valve S4 circuit 2 times when solenoid valve S4 is operated (1-trip detection logic)	• Short in shift solenoid valve S4 circuit • Shift solenoid valve S4 • ECM
P0983	ECM detects open in solenoid valve S4 circuit 2 times when solenoid valve S4 is not operated (1-trip detection logic)	• Open in shift solenoid valve S4 circuit • Shift solenoid valve S4 • ECM

MONITOR DESCRIPTION

The ECM commands gear shifts by turning the shift solenoid valves "ON/OFF". When there is an open or short circuit in any shift solenoid valve circuit, the ECM detects the problem and illuminates the MIL and stores the DTC. And the ECM performs the fail-safe function and turns the other normal shift solenoid valves "ON/OFF" (In case of an open or short circuit, the ECM stops sending current to the circuit.)
(See page AX-29).

MONITOR STRATEGY

Related DTCs	P0982: Shift solenoid valve S4/Range check (Low resistance) P0983: Shift solenoid valve S4/Range check (High resistance)
Required sensors/Components	Shift solenoid valve S4
Frequency of operation	Continuous
Duration	0.064 sec.
MIL operation	Immediate
Sequence of operation	None

TYPICAL ENABLING CONDITIONS

P0982: Range check (Low resistance):

The monitor will run whenever this DTC is not present.	None
Shift solenoid valve S4	ON
Battery voltage	8 V or more
Ignition switch	ON
Starter	OFF

P0983: Range check (High resistance):

The monitor will run whenever this DTC is not present.	None
Shift solenoid valve S4	OFF
Battery voltage	8 V or more
Ignition switch	ON
Starter	OFF

TYPICAL MALFUNCTION THRESHOLDS

P0982: Range check (Low resistance):

Shift solenoid valve S4 resistance	8 Ω or less

P0983: Range check (High resistance):

Shift solenoid valve S4 resistance	100 kΩ or more

COMPONENT OPERATING RANGE

Shift solenoid valve S4	Resistance: 11 to 15 Ω at 20°C (68°F)

WIRING DIAGRAM

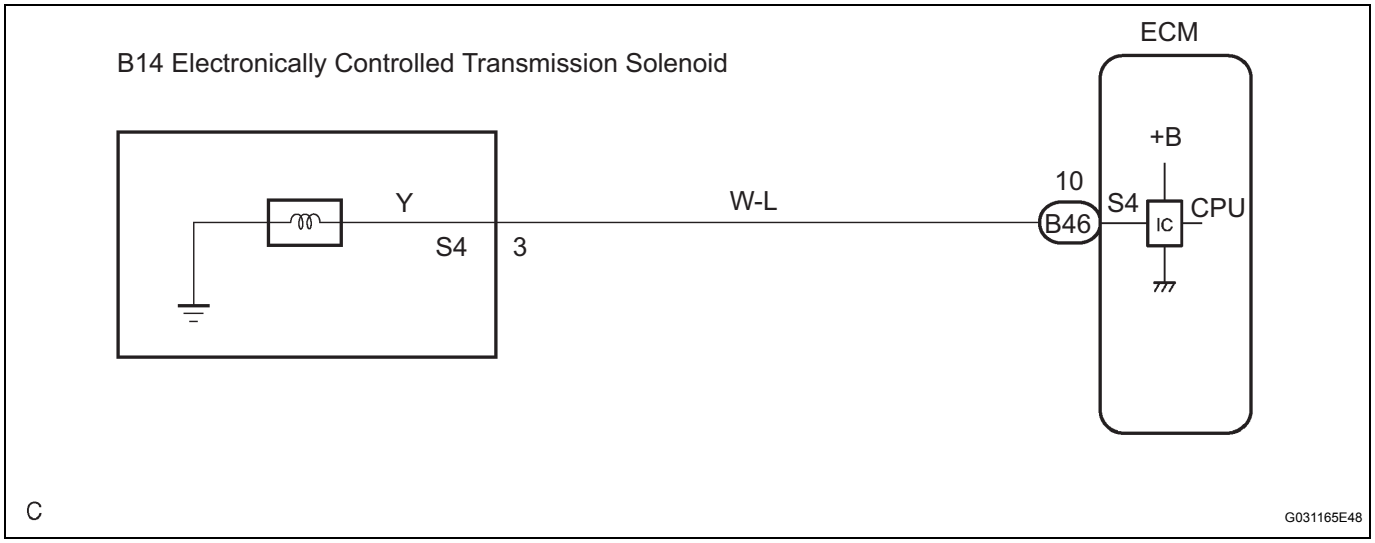

INSPECTION PROCEDURE

AX

1 INSPECT TRANSMISSION WIRE (S4)

Transmission Wire Side:

(Connector Front View):

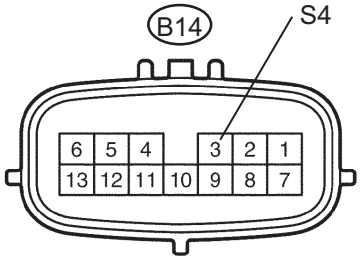

(a) Disconnect the transmission wire connector from the transaxle.

(b) Measure the resistance according to the value(s) in the table below.

Resistance

Tester Connection	Specified Condition 20°C (68°F)
3 - Body ground	11 to 15 Ω

NG → **Go to step 3**

OK

2	CHECK HARNESS AND CONNECTOR (TRANSMISSION WIRE - ECM)

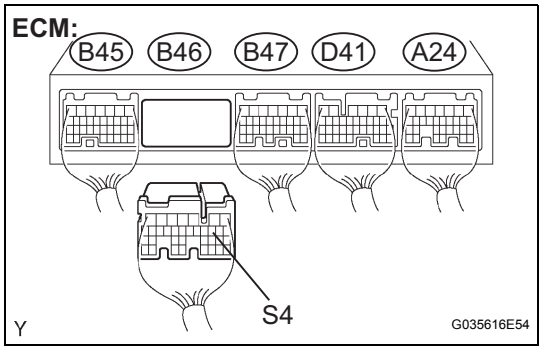

(a) Connect the transmission connector to the transaxle.
(b) Disconnect the connector from the ECM.
(c) Measure the resistance according to the value(s) in the table below.

Resistance

Tester Connection	Specified Condition 20°C (68°F)
B46 - 10 (S4) - Body ground	11 to 15 Ω

NG → **REPAIR OR REPLACE HARNESS OR CONNECTOR**

OK

REPLACE ECM

3	INSPECT SHIFT SOLENOID VALVE (S4)

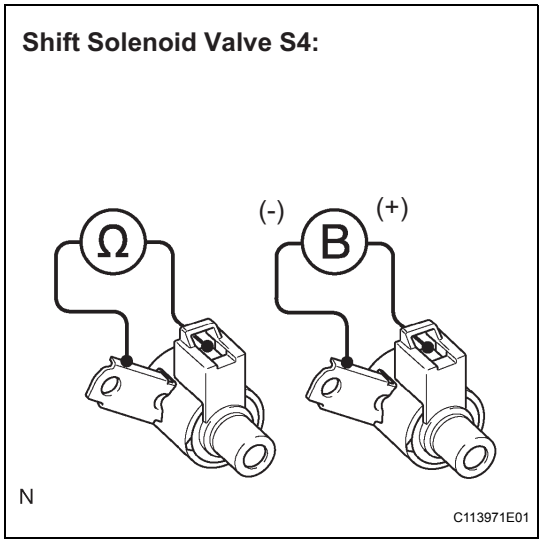

(a) Remove the shift solenoid valve S4.
(b) Measure the resistance according to the value(s) in the table below.

Resistance

Tester Connection	Specified Condition 20°C (68°F)
Solenoid Connector (S4) - Solenoid Body (S4)	11 to 15 Ω

(c) Connect the positive (+) lead to the terminal of the solenoid connector, and the negative (-) lead to the solenoid body.

OK:

The solenoid makes an operating sound.

NG → **REPLACE SHIFT SOLENOID VALVE (S4)**

OK

REPAIR OR REPLACE TRANSMISSION WIRE

AX

DTC	P0985	Shift Solenoid "E" Control Circuit Low (Shift Solenoid Valve SR)

DTC	P0986	Shift Solenoid "E" Control Circuit High (Shift Solenoid Valve SR)

DESCRIPTION

Shifting from 1st to 5th is performed in combination with "ON" and "OFF" operation of the shift solenoid valves SL1, SL2, SL3, S4 and SR which are controlled by the ECM. If an open or short circuit occurs in either of the shift solenoid valves, the ECM controls the remaining normal shift solenoid valves to allow the vehicle to be operated smoothly (Fail safe function).

DTC No.	DTC Detection Condition	Trouble Area
P0985	ECM detects short in solenoid valve SR circuit 2 times when solenoid valve SR is operated (1-trip detection logic)	• Short in shift solenoid valve SR circuit • Shift solenoid valve SR • ECM
P0986	ECM detects open in solenoid valve SR circuit 2 times when solenoid valve SR is not operated (1-trip detection logic)	• Open in shift solenoid valve SR circuit • Shift solenoid valve SR • ECM

MONITOR DESCRIPTION

The ECM commands gear shifts by turning the shift solenoid valves "ON/OFF". When there is an open or short circuit in any shift solenoid valve circuit, the ECM detects the problem and illuminates the MIL and stores the DTC. And the ECM performs the fail-safe function and turns the other normal shift solenoid valves "ON/OFF" (In case of an open or short circuit, the ECM stops sending current to the circuit.)
(See page AX-29).

MONITOR STRATEGY

Related DTCs	P0985: Shift solenoid valve SR/Range check (Low resistance) P0986: Shift solenoid valve SR/Range check (High resistance)
Required sensors/Components	Shift solenoid valve SR
Frequency of operation	Continuous
Duration	0.064 sec.
MIL operation	Immediate
Sequence of operation	None

AX

TYPICAL ENABLING CONDITIONS

P0985: Range check (Low resistance):

The monitor will run whenever this DTC is not present.	None
Shift solenoid valve SR	ON
Battery voltage	8 V or more
Ignition switch	ON
Starter	OFF

P0986: Range check (High resistance):

The monitor will run whenever this DTC is not present.	None
Shift solenoid valve SR	OFF
Battery voltage	8 V or more
Ignition switch	ON
Starter	OFF

TYPICAL MALFUNCTION THRESHOLDS

P0985: Range check (Low resistance):

Shift solenoid valve SR resistance	8 Ω or less

P0986: Range check (High resistance):

Shift solenoid valve SR resistance	100 kΩ or more

COMPONENT OPERATING RANGE

Shift solenoid valve SR	Resistance: 11 to 15 Ω at 20°C (68°F)

WIRING DIAGRAM

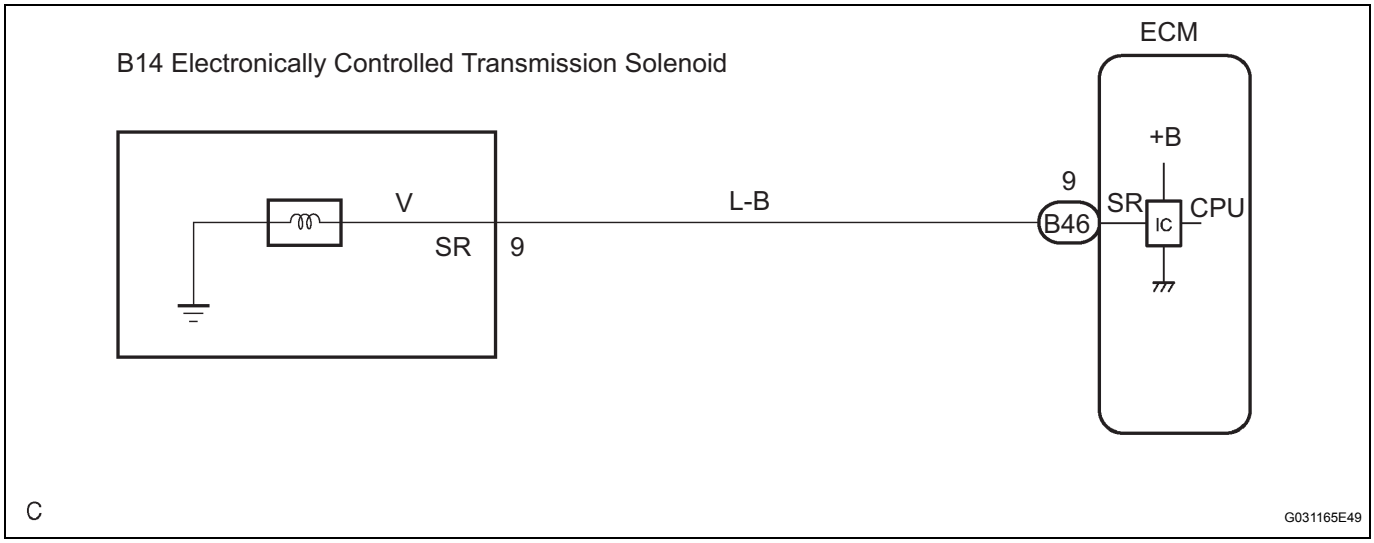

AX

INSPECTION PROCEDURE

1	INSPECT TRANSMISSION WIRE (SR)

Transmission Wire Side:

(Connector Front View):

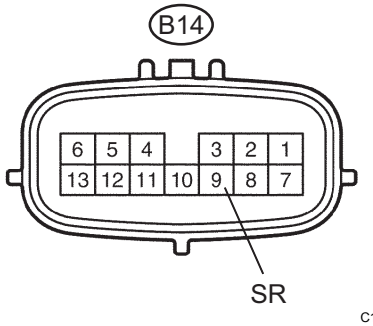

(a) Disconnect the transmission wire connector from the transaxle.
(b) Measure the resistance according to the value(s) in the table below.

Resistance

Tester Connection	Specified Condition 20°C (68°F)
9 - Body ground	11 to 15 Ω

NG → **Go to step 3**

OK

2	CHECK HARNESS AND CONNECTOR (TRANSMISSION WIRE - ECM)

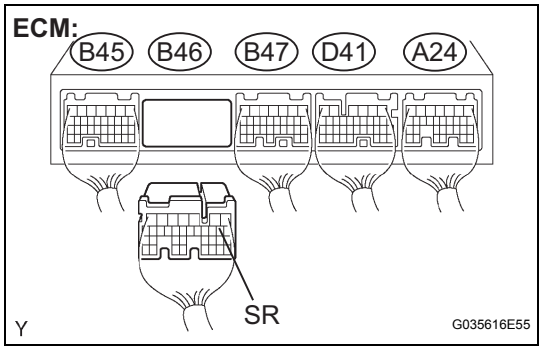

(a) Connect the transmission connector to the transaxle.
(b) Disconnect the connector from the ECM.
(c) Measure the resistance according to the value(s) in the table below.

Resistance

Tester Connection	Specified Condition 20°C (68°F)
B46 - 9 (SR) - Body ground	11 to 15 Ω

NG → **REPAIR OR REPLACE HARNESS OR CONNECTOR**

OK

REPLACE ECM

3	INSPECT SHIFT SOLENOID VALVE (SR)

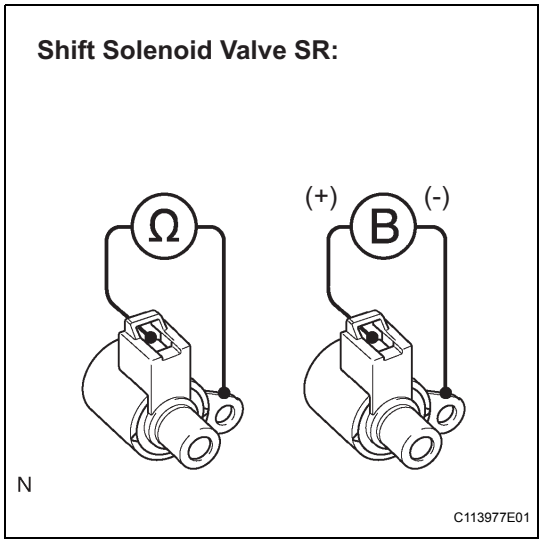

(a) Remove the shift solenoid valve SR.
(b) Measure the resistance according to the value(s) in the table below.

Resistance

Tester Connection	Specified Condition 20°C (68°F)
Solenoid Connector (SR) - Solenoid Body (SR)	11 to 15 Ω

(c) Connect the positive (+) lead to the terminal of the solenoid connector, and the negative (-) lead to the solenoid body.

OK:

The solenoid makes an operating sound.

NG → **REPLACE SHIFT SOLENOID VALVE (SR)**

OK

REPAIR OR REPLACE TRANSMISSION WIRE

AX

DTC	P2716	Pressure Control Solenoid "D" Electrical (Shift Solenoid Valve SLT)

DESCRIPTION

The linear solenoid valve (SLT) controls the transmission line pressure for smooth transmission operation based on signals from the throttle position sensor and the vehicle speed sensor. The ECM adjusts the duty cycle of the SLT solenoid valve to control hydraulic line pressure coming from the primary regulator valve. Appropriate line pressure assures smooth shifting with varying engine outputs.
(*): Duty Ratio
The duty ratio is the ratio of the period of continuity in one cycle.
For example, if A is the period of continuity in one cycle, and B is the period of non-continuity, then
Duty Ratio=A/(A + B) x 100(%)

DTC No.	DTC Detection Condition	Trouble Area
P2716	Open or short is detected in shift solenoid valve SLT circuit for 1 second or more while driving (1-trip detecting logic).	• Open or short in shift solenoid valve SLT circuit • Shift solenoid valve SLT • ECM

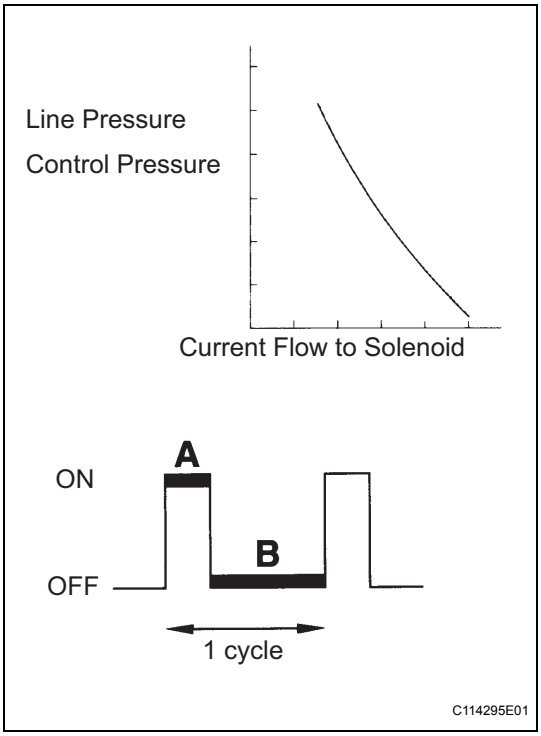

AX

MONITOR DESCRIPTION

When an open or short in the linear solenoid valve (SLT) circuit is detected, the ECM interprets this as a fault. The ECM will turn on the MIL and store the DTC.

MONITOR STRATEGY

Related DTCs	P2716: Shift solenoid valve SLT/Range check
Required sensors/Components	Shift solenoid valve SLT
Frequency of operation	Continuous
Duration	1 sec.
MIL operation	Immediate
Sequence of operation	None

TYPICAL ENABLING CONDITIONS

The monitor will run whenever this DTC is not present.	None
Solenoid current cut status	Not cut
Battery voltage	11 V or more
Ignition switch	ON
Starter	OFF
CPU commanded duty ratio to SLT	19% or more

TYPICAL MALFUNCTION THRESHOLDS

Solenoid status from IC	Fail (Open or short)

COMPONENT OPERATING RANGE

Shift solenoid valve SLT	Resistance: 5.0 to 5.6 Ω at 20°C (68°F)

WIRING DIAGRAM

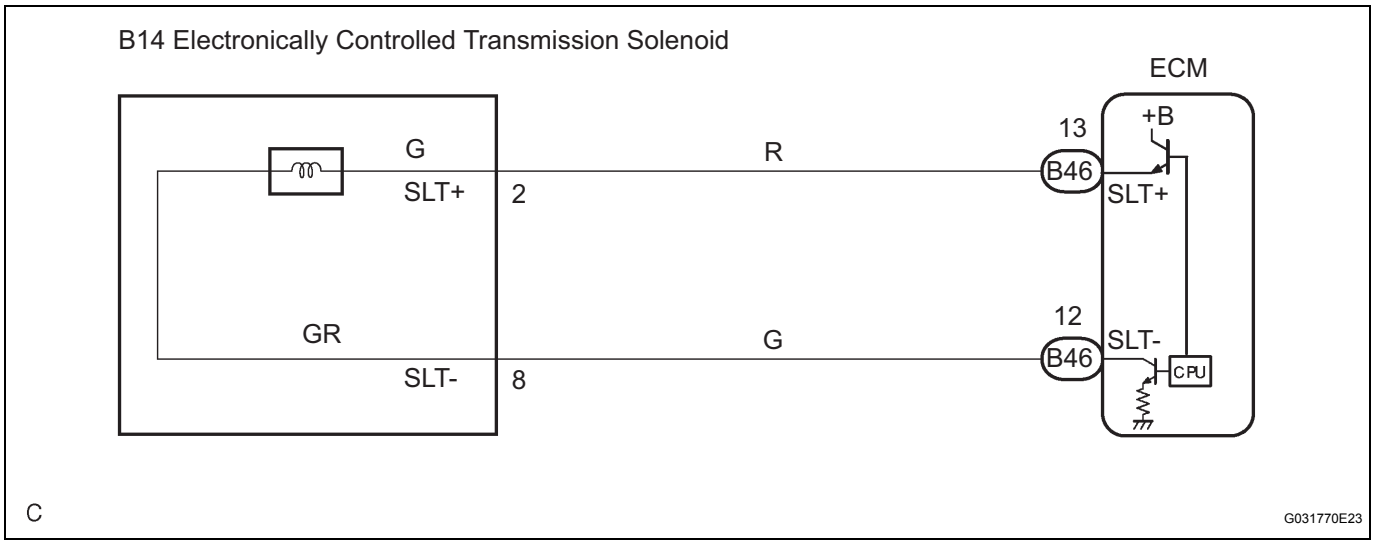

AX

INSPECTION PROCEDURE

1 INSPECT TRANSMISSION WIRE (SLT)

Transmission Wire Side:

(Connector Front View):

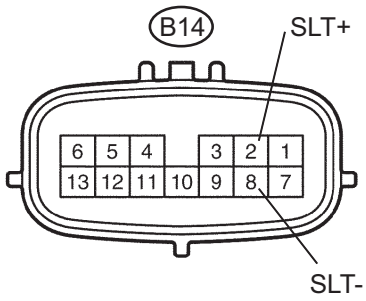

(a) Disconnect the transmission wire connector from the transaxle.
(b) Measure the resistance according to the value(s) in the table below.
Resistance

Tester Connection	Specified Condition 20°C (68°F)
2 (SLT+) - 8 (SLT-)	5.0 to 5.6 Ω

(c) Measure the resistance according to the value(s) in the table below.
Resistance (Check for short)

Tester Connection	Specified Condition
2 (SLT+) - Body ground	10 kΩ or higher
8 (SLT-) - Body ground	↑

NG → **Go to step 3**

OK

2 CHECK HARNESS AND CONNECTOR (TRANSMISSION WIRE - ECM)

ECM:

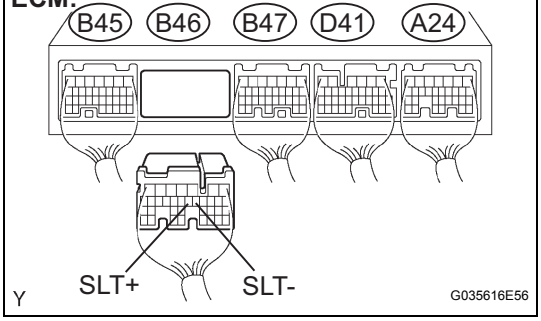

(a) Connect the transmission wire connector to the transaxle.
(b) Disconnect the ECM connector.
(c) Measure the resistance according to the value(s) in the table below.
Resistance

Tester Connection	Specified Condition 20°C (68°F)
B46 - 13 (SLT+) - B46 - 12 (SLT-)	5.0 to 5.6 Ω

(d) Measure the resistance according to the value(s) in the table below.
Resistance (Check for short)

Tester Connection	Specified Condition
B46 - 13 (SLT+) - Body ground	10 kΩ or higher
B46 - 12 (SLT-) - Body ground	

NG → **REPAIR OR REPLACE HARNESS OR CONNECTOR**

OK

REPLACE ECM

AX

3	INSPECT SHIFT SOLENOID VALVE (SLT)

Shift Solenoid Valve SLT:

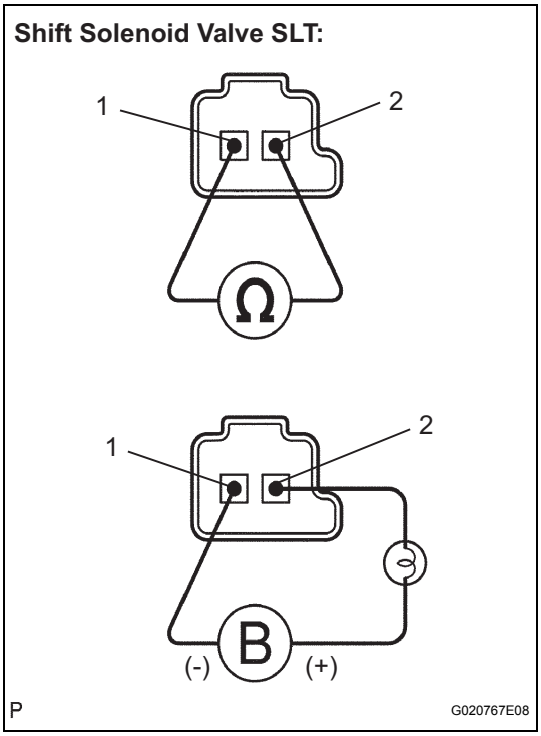

(a) Remove the shift solenoid valve (SLT).
(b) Measure the resistance according to the value(s) in the table below.

Resistance

Tester Connection	Specified Condition 20°C (68°F)
1 - 2	5.0 to 5.6 Ω

(c) Connect the positive (+) lead with a 21 W bulb to terminal 2 and the negative (-) lead to terminal 1 of the solenoid valve connector, then check the movement of the valve.

OK:

The solenoid makes an operating sound.

NG → **REPLACE SHIFT SOLENOID VALVE (SLT)**

OK

REPAIR OR REPLACE TRANSMISSION WIRE

AX

DTC	P2769	Torque Converter Clutch Solenoid Circuit Low (Shift Solenoid Valve DSL)

DTC	P2770	Torque Converter Clutch Solenoid Circuit High (Shift Solenoid Valve DSL)

DESCRIPTION

The shift solenoid valve DSL is turned "ON" and "OFF" by signals from the ECM in order to control the hydraulic pressure operation, the lock-up relay valve, which then controls operation of the lock-up clutch.

DTC No.	DTC Detection Condition	Trouble Area
P2769	ECM detects short in solenoid valve DSL circuit (0.1 sec.) when solenoid valve DSL is operated (2-trip detection logic)	• Short in shift solenoid valve DSL circuit • Shift solenoid valve DSL • ECM
P2770	ECM detects open in solenoid valve DSL circuit (0.1 sec.) when solenoid valve DSL is not operated (2-trip detection logic)	• Open in shift solenoid valve DSL circuit • Shift solenoid valve DSL • ECM

MONITOR DESCRIPTION

Torque converter lock-up is controlled by the ECM based on engine rpm, engine load, engine temperature, vehicle speed, transmission temperature, and shift range selection. The ECM determines the lock-up status of the torque converter by comparing the engine rpm (NE) to the input turbine rpm (NT). The ECM calculates the actual transmission gear by comparing input turbine rpm (NT) to counter gear rpm (NC). When conditions are appropriate, the ECM requests "lock-up" by applying control voltage to the shift solenoid DSL. When the DSL is opened, it applies pressure to the lock-up relay valve and locks the torque converter clutch. If the ECM detects an open or short in the DSL solenoid circuit, the ECM interprets this as a fault in the DSL solenoid or circuit. The ECM will turn on the MIL and store the DTC.

MONITOR STRATEGY

AX

Related DTCs	P2769: Shift solenoid valve DSL/Range check (Low resistance) P2770: Shift solenoid valve DSL/Range check (High resistance)
Required sensors/Components	Shift solenoid valve DSL
Frequency of operation	Continuous
Duration	0.064 sec. or more
MIL operation	2 driving cycles
Sequence of operation	None

TYPICAL ENABLING CONDITIONS

P2769: Range check (Low resistance):

The monitor will run whenever this DTC is not present.	None
Shift solenoid valve DSL	ON
Solenoid current cut status	Not cut
Battery voltage	8 V or more
Ignition switch	ON
Starter	OFF

P2770: Range check (High resistance):

The monitor will run whenever this DTC is not present.	None
Shift solenoid valve DSL	ON
Battery voltage	8 V or more
Ignition switch	ON

Starter	OFF

TYPICAL MALFUNCTION THRESHOLDS

P2769: Range check (Low resistance):

Shift solenoid valve DSL resistance	8 Ω or less

P2770: Range check (High resistance):

Shift solenoid valve DSL resistance	100 kΩ or more

COMPONENT OPERATING RANGE

Shift solenoid valve DSL	Resistance: 11 to 13 Ω at 20°C (68°F)

WIRING DIAGRAM

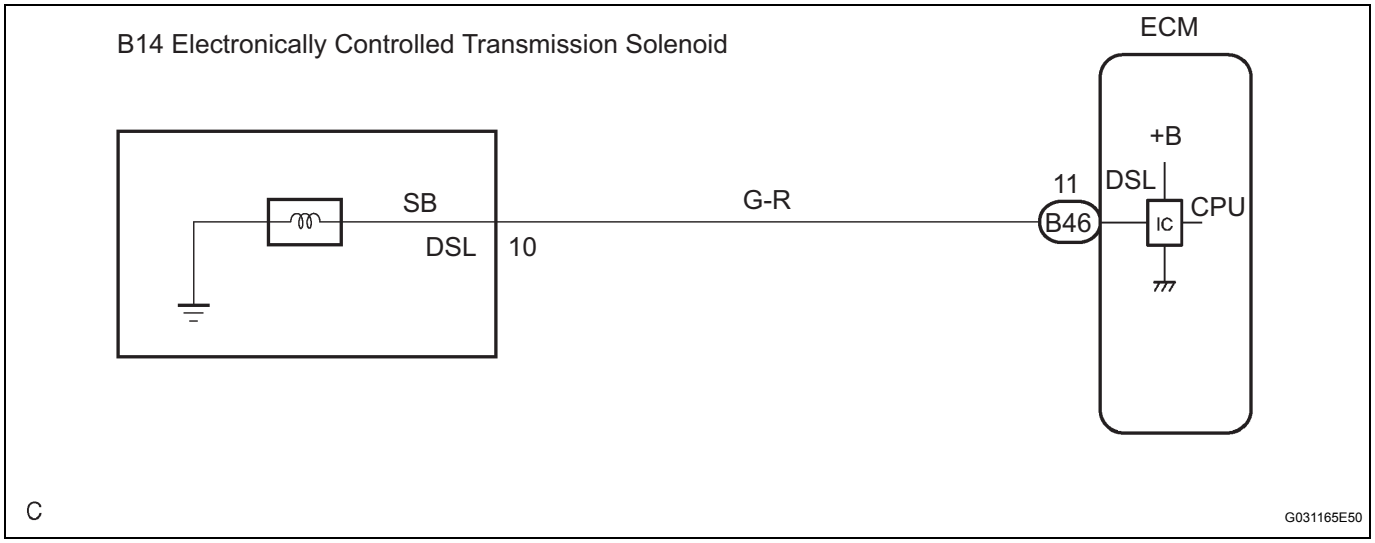

AX

INSPECTION PROCEDURE

1	INSPECT TRANSMISSION WIRE (DSL)

Transmission Wire Side:

(Connector Front View):

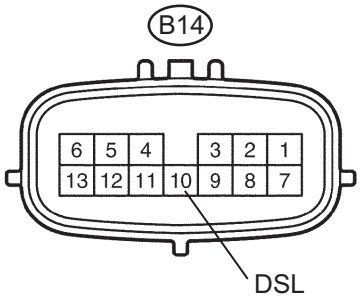

(a) Disconnect the transmission wire connector from the transaxle.
(b) Measure the resistance according to the value(s) in the table below.

Resistance

Tester Connection	Specified Condition 20°C (68°F)
10 - Body ground	11 to 13 Ω

NG → **Go to step 3**

OK

2	CHECK HARNESS AND CONNECTOR (TRANSMISSION WIRE - ECM)

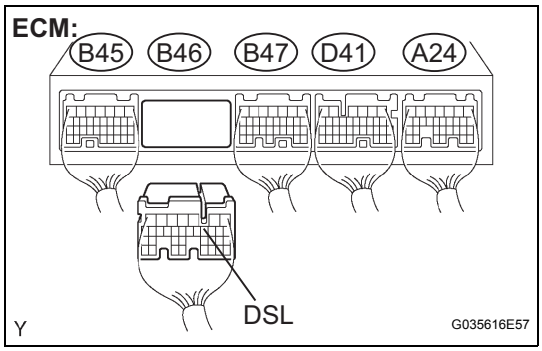

(a) Connect the transmission wire connector.
(b) Disconnect the ECM connector.
(c) Measure the resistance according to the value(s) in the table below.

Resistance

Tester Connection	Specified Condition 20°C (68°F)
B46 - 11 (DSL) - Body ground	11 to 13 Ω

NG → **REPAIR OR REPLACE HARNESS OR CONNECTOR**

OK

REPLACE ECM

3	INSPECT SHIFT SOLENOID VALVE (DSL)

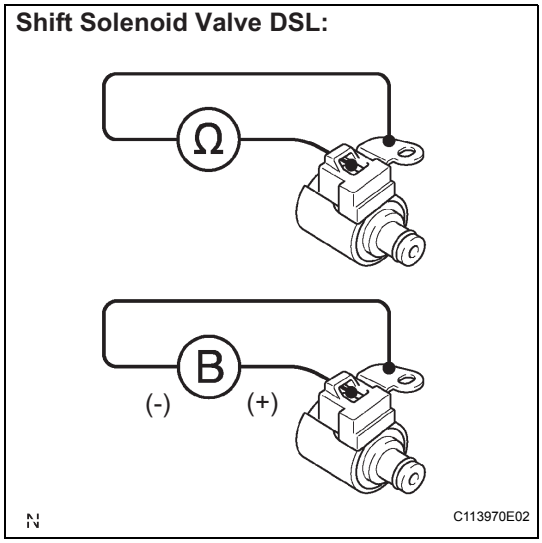

(a) Remove the shift solenoid valve DSL.
(b) Measure the resistance according to the value(s) in the table below.

Resistance

Tester Connection	Specified Condition 20°C (68°F)
Solenoid Connector (DSL) - Solenoid Body (DSL)	11 to 13 Ω

(c) Connect the positive (+) lead to the terminal of the solenoid connector, and the negative (-) lead to the solenoid body.

OK:

The solenoid valve makes an operating sound.

NG → **REPLACE SHIFT SOLENOID VALVE (DSL)**

OK

REPAIR OR REPLACE TRANSMISSION WIRE

AX

Transmission Control Switch Circuit

DESCRIPTION

When moving the shift lever into the S position using the transmission control switch, it is possible to switch the shift range position between "1" (first range) and "5" (fifth range).
Shifting up "+" once raises one shift range position, and shifting down "-" lowers one shift range position.

WIRING DIAGRAM

w/ Smart Key System:

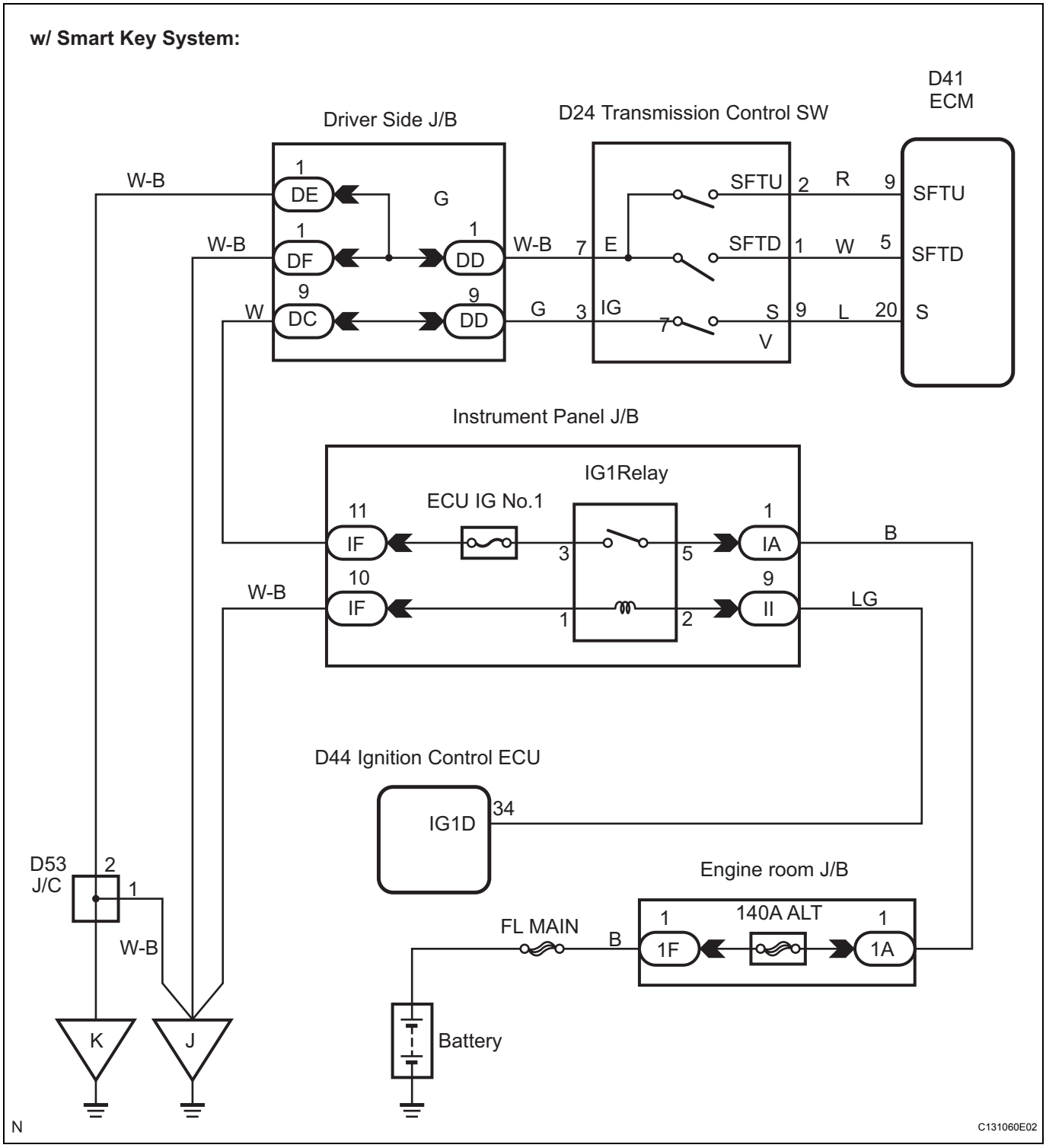

AX

w/o Smart Key System:

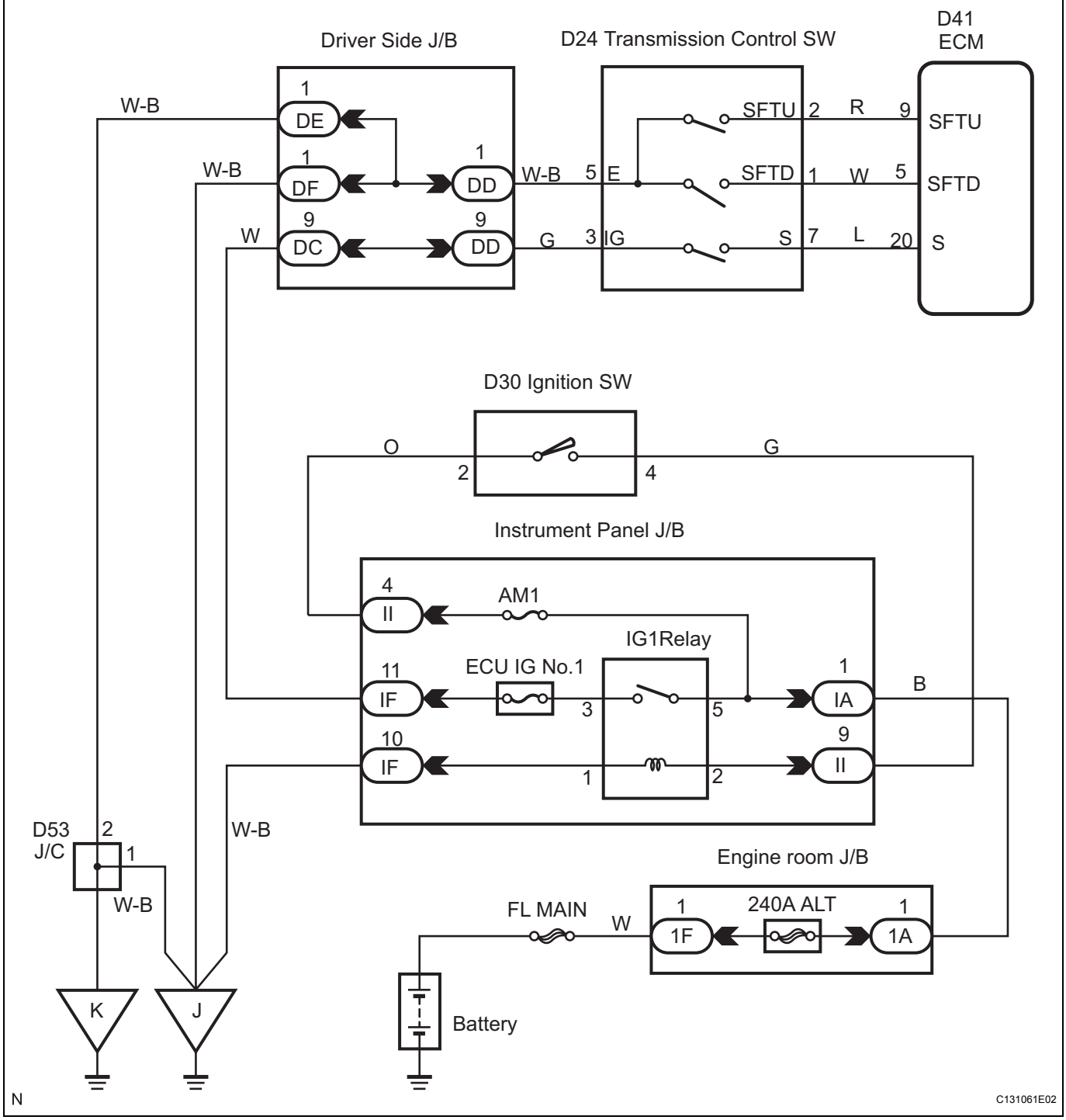

AX

INSPECTION PROCEDURE

1	CHECK HARNESS AND CONNECTOR (BATTERY - TRANSMISSION CONTROL SWITCH)

Wire Harness Side:
(Connector Front View):

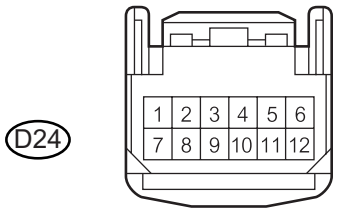

w/o Smart Key System:

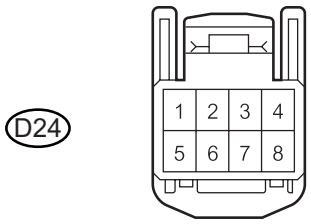

w/o Smart Key System:

H

C131062E01

(a) Disconnect the transmission control switch connector of shift lock control unit assembly.
(b) Measure the voltage according to the value(s) in the table below.
Voltage

Switch Condition	Tester Connection	Specified Condition
IG switch on (IG)	3 - Body ground	10 to 14 V
IG switch OFF	↑	Below 1 V

NG → **REPAIR OR REPLACE HARNESS OR CONNECTOR**

OK

2	CHECK HARNESS AND CONNECTOR (TRANSMISSIONÅ@CONTROL SWITCH - BODY GROUND)

AX

Wire Harness Side:
(Connector Front View):

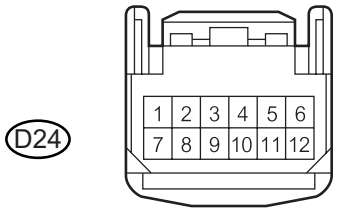

w/o Smart Key System:

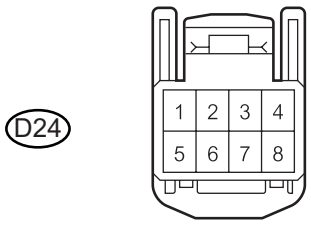

w/o Smart Key System:

H

C131062E02

(a) Measure the resistance according to the value(s) in the table below.
Resistance

Tester Connection	Specified Condition
7 *1 - Body ground 5 *2 - Body ground	Below 1 Ω

*1: w/ Smart Key System
*2: w/o Smart Key System

NG → **REPAIR OR REPLACE HARNESS OR CONNECTOR**

OK

3 INSPECT TRANSMISSION CONTROL SWITCH

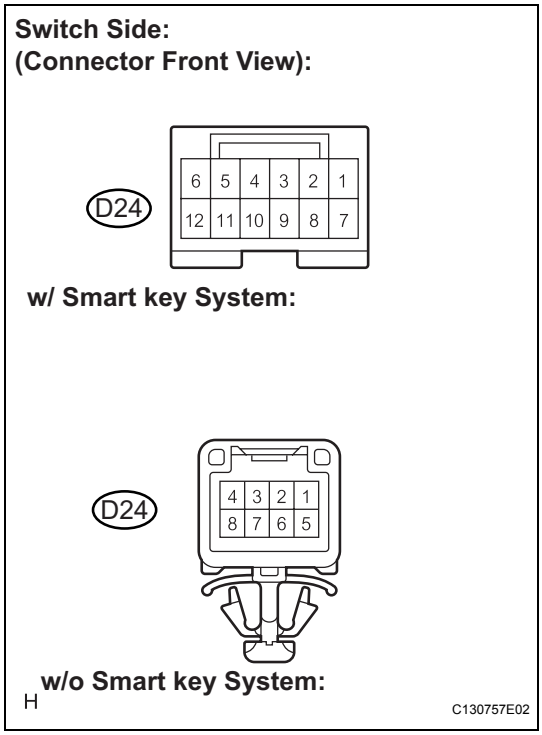

(a) Measure resistance between each terminal of shift lock control unit assembly when the shift lever is moved to each position.

Resistance (Check for short)

Shift Position	Tester Connection	Specified Condition
S, "+" and "-"	3 - 9 *1 3 - 7 *2	Below 1 Ω
Except S, "+" and "-"	↑	10 kΩ or higher
Press continuously "+" (Up shift)	2 - 7 *1 2 - 5 *2	Below 1 Ω
S	↑	10 kΩ or higher
Press continuously "-" (Down shift)	1 - 7 *1 1 - 5 *2	Below 1 Ω
S	↑	10 kΩ or higher

*1: w/ Smart Key System
*2: w/o Smart Key System

NG → REPLACE TRANSMISSION CONTROL SWITCH

OK

4 CHECK HARNESS AND CONNECTOR (TRANSMISSION CONTROL SWITCH - ECM)

AX

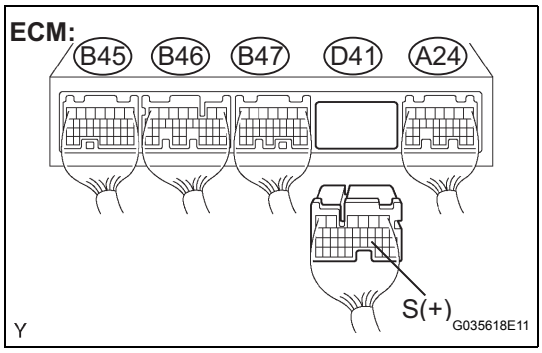

(a) Connect the transmission control switch connector of shift lock control unit assembly.
(b) Disconnect the ECM connector.
(c) Turn the ignition switch on (IG), and measure the voltage according to the value(s) in the table below when the shift lever is moved to each position.

Voltage

Shift Position	Tester Connection	Specified Condition
S, "+" and "-"	D41 - 20(S) - Body ground	10 to 14 V
Except S, "+" and "-"	↑	Below 1 V

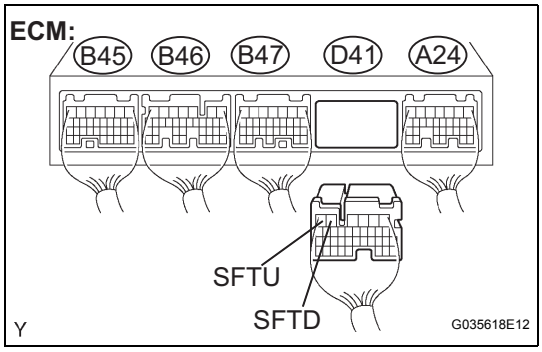

(d) Turn the ignition switch to the LOCK position.
(e) Measure the resistance according to the value(s) in the table below when the shift lever is moved to each position.

Resistance

Shift Position	Tester Connection	Specified Condition
Press continuously "+" (Up shift)	D41 - 6 (SFTU) - Body ground	Below 1 Ω
S	↑	10 kΩ or higher

Shift Position	Tester Connection	Specified Condition
Press continuously "-" (Down shift)	D41 - 5 (SFTD) - Body ground	Below 1 Ω
S	↑	10 kΩ or higher

NG → REPAIR OR REPLACE HARNESS OR CONNECTOR

OK

PROCEED TO NEXT CIRCUIT INSPECTION SHOWN IN PROBLEM SYMPTOMS TABLE

AUTOMATIC TRANSAXLE FLUID

ON-VEHICLE INSPECTION

1. CHECK FLUID LEVEL

HINT:

Drive the vehicle so that the engine and transaxle are at normal operating temperature.

Fluid temperature:

70 to 80°C (158 to 176°F)

(a) Park the vehicle on a level surface and set the parking brake.

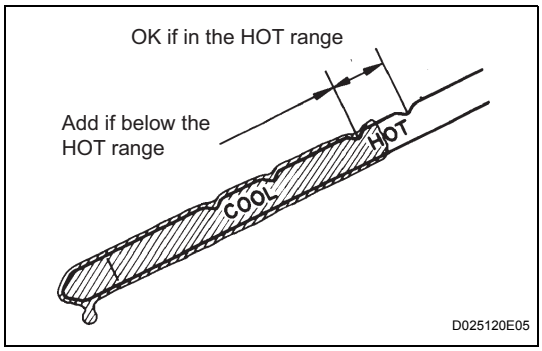

(b) With the engine idling and the brake pedal depressed, move the shift lever to all positions from P to L (S1) and return to the P position.

(c) Take out the dipstick and wipe it clean.

(d) Put the dipstick back all the way.

(e) Take out the dipstick again and check that the fluid level is within the HOT range.

If the fluid level is below the HOT range, add new fluid and recheck the fluid level.

If the fluid level exceeds the HOT range, drain the fluid once, add the proper amount of new fluid and recheck the fluid level.

If there are leaks, it is necessary to repair or replace O-rings, FIPGs, oil seals, plugs and/or other parts.

SPEED SENSOR

COMPONENTS

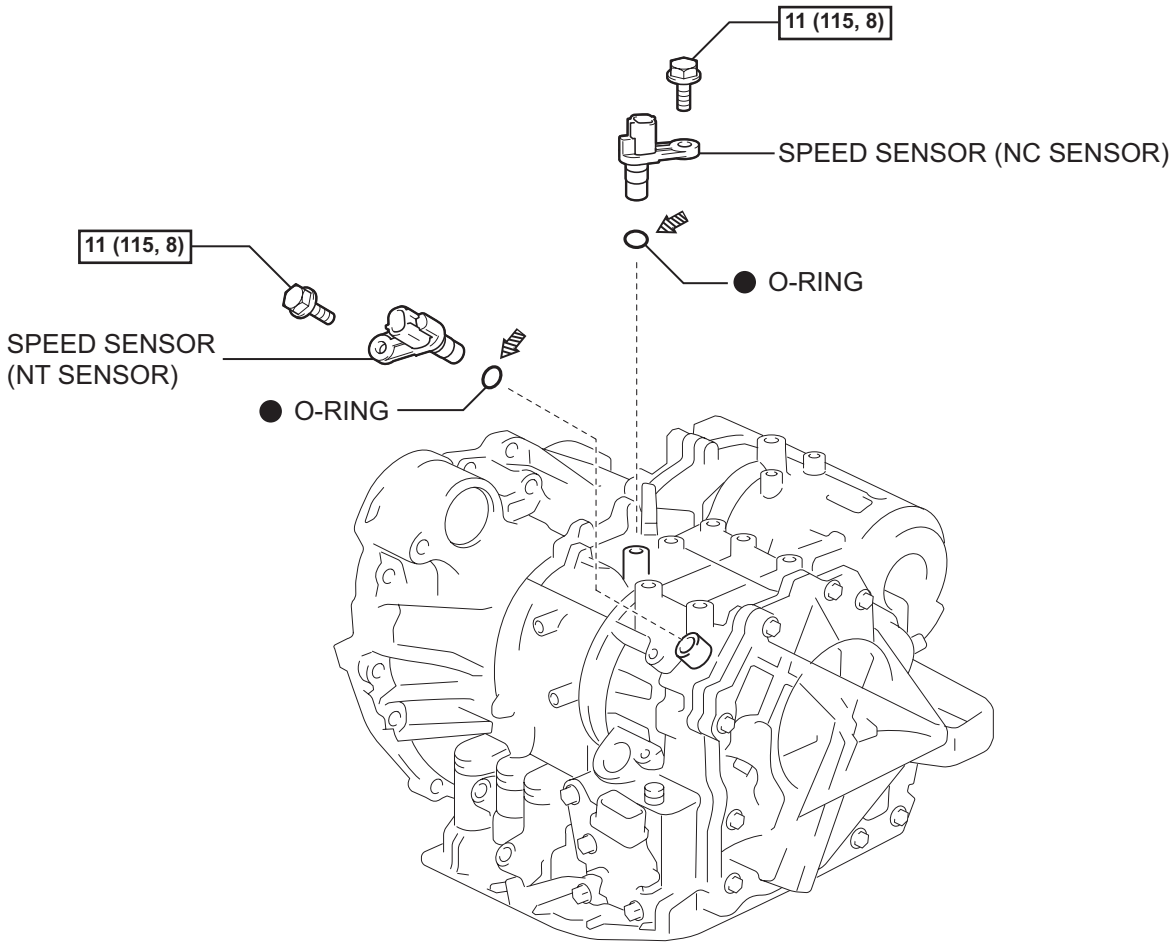

Precoated part ● Non-reusable part

N*m (kgf*cm, ft.*lbf) : Specified torque

P

C126418E01

AX

REMOVAL

1. **REMOVE BATTERY**
2. **REMOVE AIR CLEANER ASSEMBLY**
   HINT:
   (See page EM-28)
3. **REMOVE SPEED SENSOR (NT SENSOR)**
   (a) Disconnect the speed sensor connector.
   (b) Remove the bolt and speed sensor.

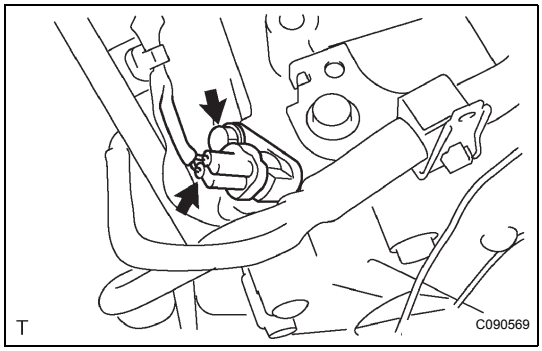

4. **REMOVE SPEED SENSOR (NC SENSOR)**
   (a) Disconnect the speed sensor connector.
   (b) Remove the bolt and speed sensor.

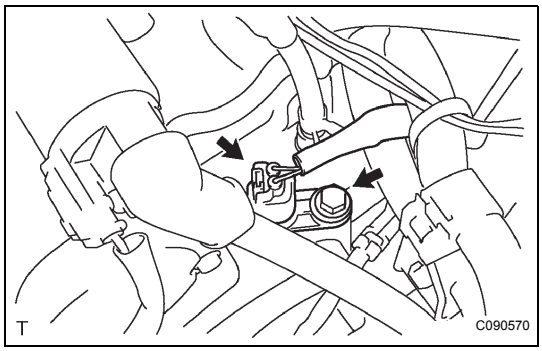

INSPECTION

1. **INSPECT SPEED SENSOR (NT SENSOR)**
   (a) Disconnect the speed sensor connector from the transaxle.
   (b) Measure the resistance according to the value(s) in the table below.
   Resistance:

Tester Connection	Specified Condition 20°C (68°F)
1 - 2	560 to 680 Ω

Sensor Side:

(Connector Front View):

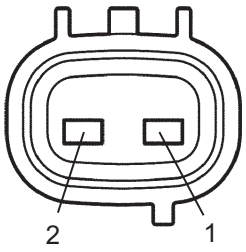

AX

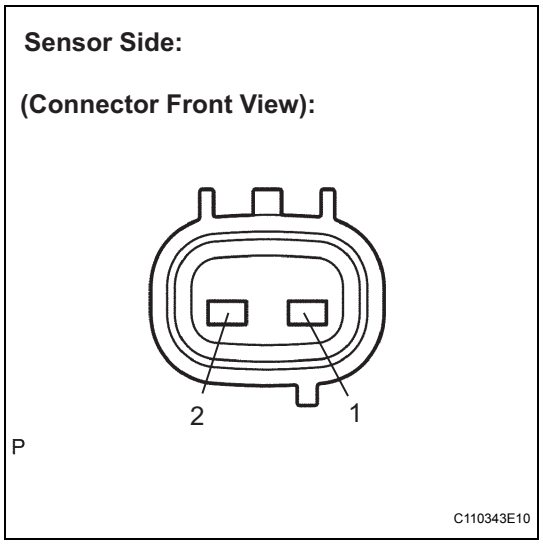

2. INSPECT SPEED SENSOR (NC SENSOR)

(a) Disconnect the speed sensor connector from the transaxle.

(b) Measure the resistance according to the value(s) in the table below.

Resistance:

Tester Connection	Specified Condition 20°C (68°F)
1 - 2	560 to 680 Ω

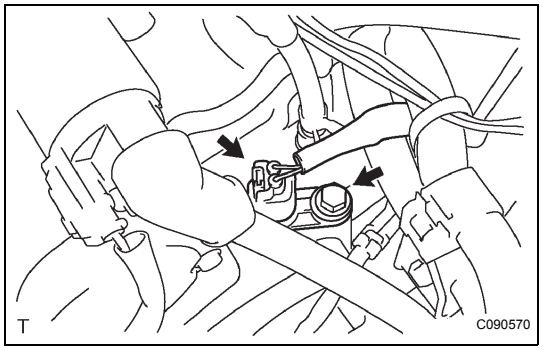

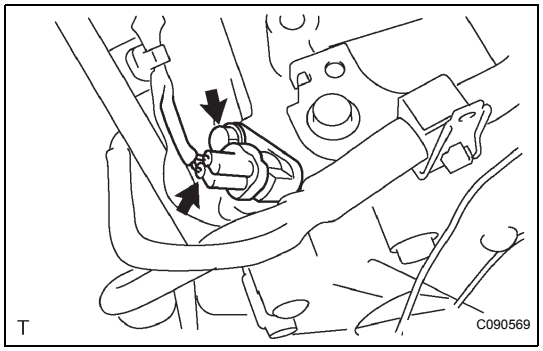

INSTALLATION

1. INSTALL SPEED SENSOR (NC SENSOR)

(a) Coat the O-ring with ATF.

(b) Install the speed sensor with the bolt.

Torque: 11 N*m (115 kgf*cm, 8 ft.*lbf)

HINT:

Make sure to install the same manufacturer's sensor.

(c) Connect the speed sensor connector.

2. INSTALL SPEED SENSOR (NT SENSOR)

(a) Coat the O-ring with ATF.

(b) Install the speed sensor with the bolt.

Torque: 11 N*m (115 kgf*cm, 8 ft.*lbf)

HINT:

Make sure to install the same manufacturer's sensor.

(c) Connect the speed sensor connector.

3. INSTALL AIR CLEANER ASSEMBLY

HINT:

(See page EM-44)

4. INSTALL BATTERY

5. PERFORM INITIALIZATION

HINT:

Some systems need initialization when disconnecting the cable from the negative battery terminal (See page AX-1).

PARK / NEUTRAL POSITION SWITCH

COMPONENTS

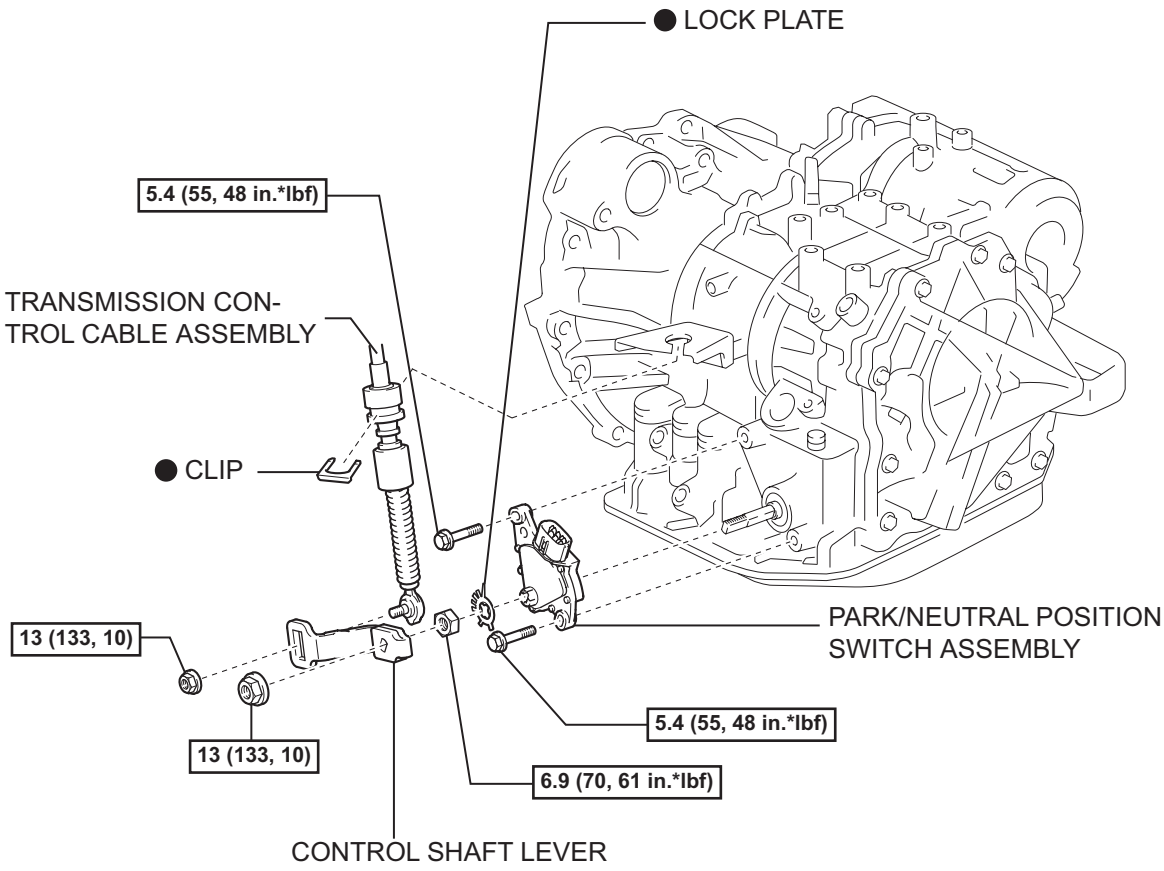

● Non-reusable part

N*m (kgf*cm, ft.*lbf) : Specified torque

P

C126420E01

REMOVAL

1. REMOVE BATTERY

2. REMOVE AIR CLEANER ASSEMBLY

HINT:

(See page EM-28)

3. SEPARATE TRANSMISSION CONTROL CABLE ASSEMBLY

(a) Remove the nut from the control shaft lever.

(b) Disconnect the control cable from the control shaft lever.

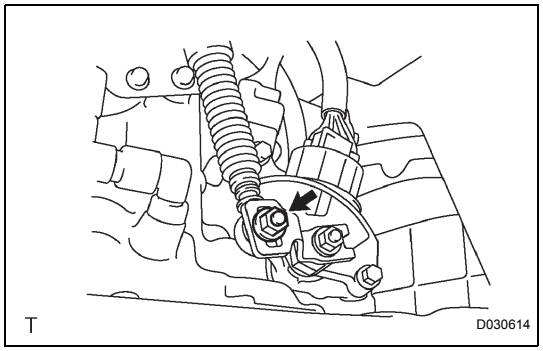

(c) Remove the clip and disconnect the control cable from the control cable bracket.

NOTICE:

Do not hold the resin guide pipe.

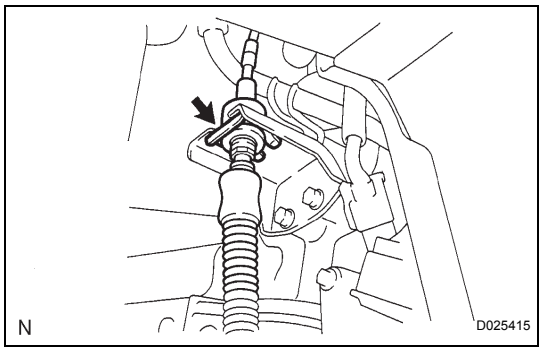

4. REMOVE PARK/NEUTRAL POSITION SWITCH ASSEMBLY

(a) Disconnect the park/neutral position switch connector.

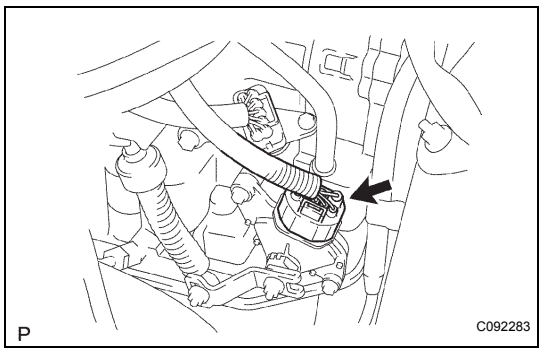

(b) Remove the nut, washer and control shaft lever.

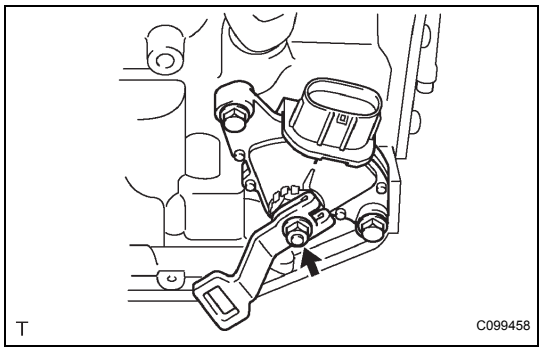

AX

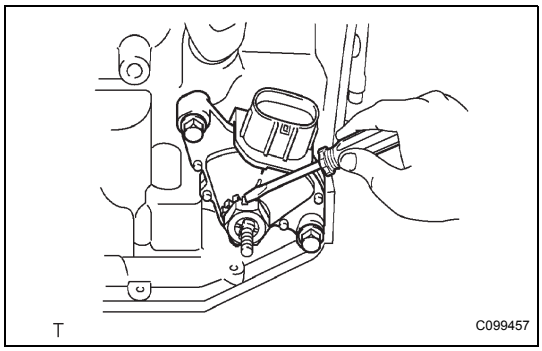

(c) Using a screwdriver, pry up the lock plate.

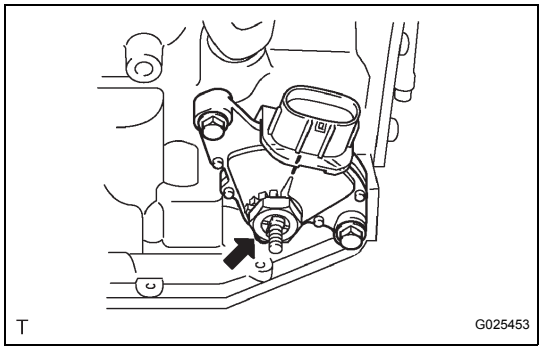

(d) Remove the lock nut and the lock plate.

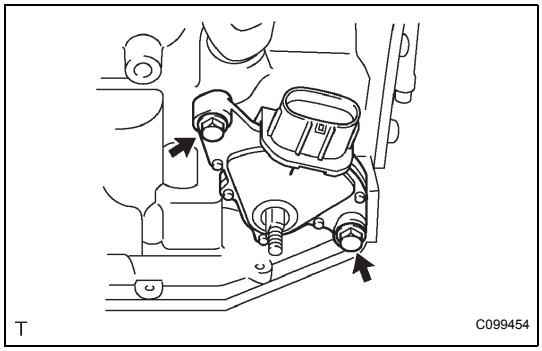

(e) Remove the 2 bolts and pull out the park/neutral position switch.

INSPECTION

1. INSPECT PARK/NEUTRAL POSITION SWITCH ASSEMBLY OPERATION

(a) Apply the parking brake and turn the ignition switch to the ON position.

(b) Depress the brake pedal and check that the engine starts only when the shift lever is in the N or P position and the engine does not start when the shift lever is in other positions.

(c) Check that the back up light comes on and the reverse warning buzzer sounds only when the shift lever is in the R position and the light and buzzer do not operate when the shift lever is in other positions.

(d) If a failure is found, check the park/neutral position switch for continuity.

2. INSPECT PARK/NEUTRAL POSITION SWITCH ASSEMBLY

(a) Jack up the vehicle.

(b) Disconnect the park/neutral position switch connector.

(c) Measure the resistance according to the value(s) in the table below when the shift lever is moved to each position.

Resistance

Shift Position	Tester Connection	Specified Condition
P	2 - 6 and 4 - 5	Below 1 Ω
Except P		10 kΩ or higher
R	2 - 1	Below 1 Ω
Except R		10 kΩ or higher
N	2 - 9 and 4 - 5	Below 1 Ω
Except N		10 kΩ or higher
D, S, "+" and "-"	2 - 7	Below 1 Ω
Except D, S, "+" and "-		10 kΩ or higher

Switch Side:

(Connector Front View):

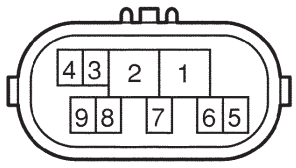

P

C110340E10

ADJUSTMENT

1. ADJUST PARK/NEUTRAL POSITION SWITCH ASSEMBLY

(a) Loosen the 2 bolts of the park/neutral position switch and move the shift lever to the N position.

(b) Align the groove with the neutral basic line.

(c) Hold the switch in position and tighten the 2 bolts.

Torque: 5.4 N*m (55 kgf*cm, 48 in.*lbf)

(d) After adjustment, perform the inspection described in park/neutral position switch assembly operation.

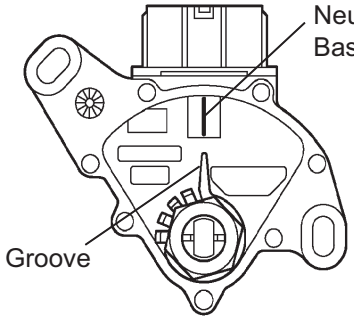

T

C099453E01

AX

INSTALLATION

1. INSTALL PARK/NEUTRAL POSITION SWITCH ASSEMBLY

(a) Install the park/neutral position switch to the manual valve shaft.
(b) Temporarily install the 2 bolts.

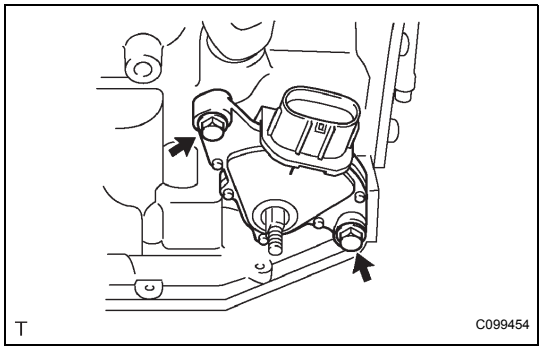

(c) Place a new lock plate and tighten the nut.
Torque: 6.9 N*m (70 kgf*cm, 61 in.*lbf)
(d) Temporarily install the control shaft lever.

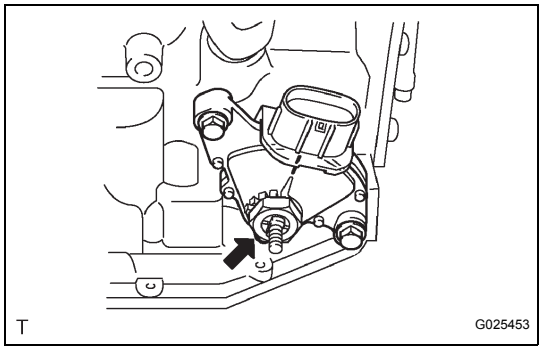

(e) Turn the lever counterclockwise until it stops, then turn it clockwise 2 notches.
(f) Remove the control shaft lever.

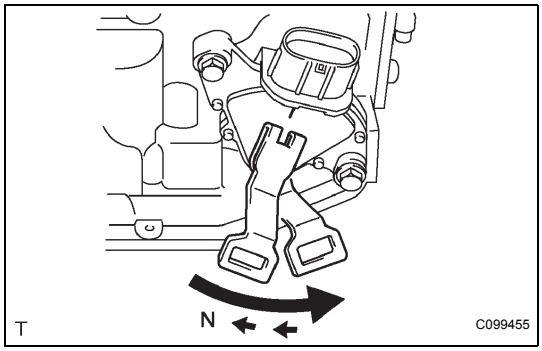

AX

(g) Align the groove with the neutral basic line.
(h) Hold the switch in position and tighten the 2 bolts.
Torque: 5.4 N*m (55 kgf*cm, 48 in.*lbf)

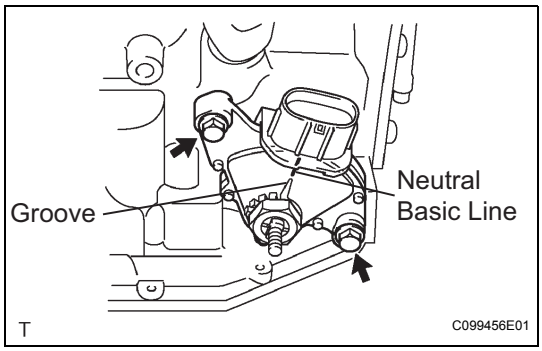

(i) Using a screwdriver, bend the tabs of the lock plate.

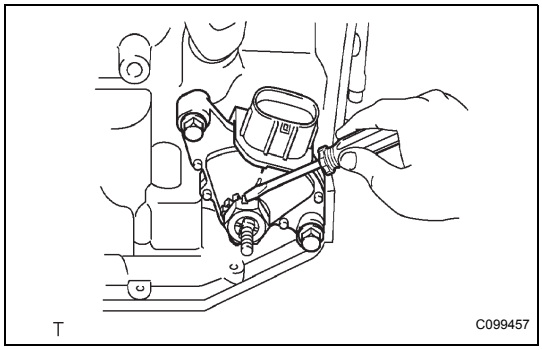

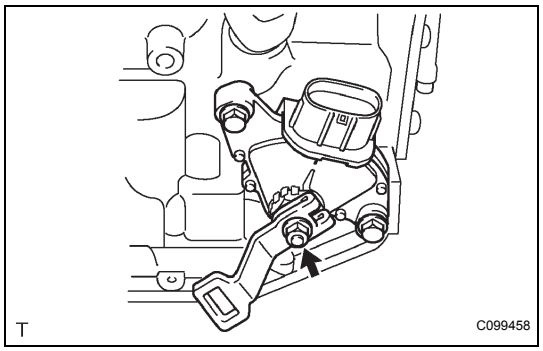

(j) Install the control shaft lever, washer and the nut.
Torque: 13 N*m (130 kgf*cm, 9 ft.*lbf)

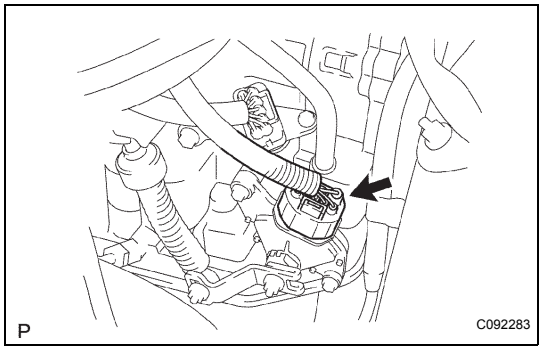

(k) Connect the park/neutral position switch connector.

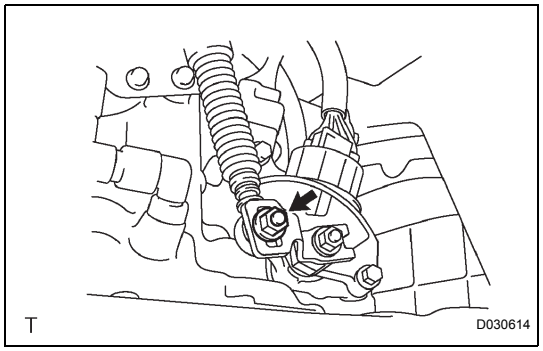

2. CONNECT TRANSMISSION CONTROL CABLE ASSEMBLY

(a) Connect the control cable to the control shaft lever with the nut.
Torque: 13 N*m (133 kgf*cm, 10 ft.*lbf)

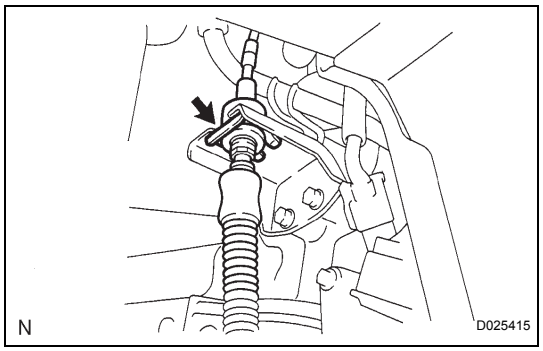

(b) Install the control cable with a new clip to the bracket.

3. ADJUST PARK/NEUTRAL POSITION SWITCH ASSEMBLY (See page AX-127)

4. INSPECT PARK/NEUTRAL POSITION SWITCH ASSEMBLY OPERATION (See page AX-126)

5. INSPECT SHIFT LEVER POSITION (See page AX-147)

6. ADJUST SHIFT LEVER POSITION (See page AX-147)

7. INSTALL AIR CLEANER ASSEMBLY
HINT:
(See page EM-44)

8. INSTALL BATTERY

9. PERFORM INITIALIZATION
HINT:
Some systems need initialization when disconnecting the cable from the negative battery terminal (See page AX-1).

AX

TRANSMISSION WIRE

COMPONENTS

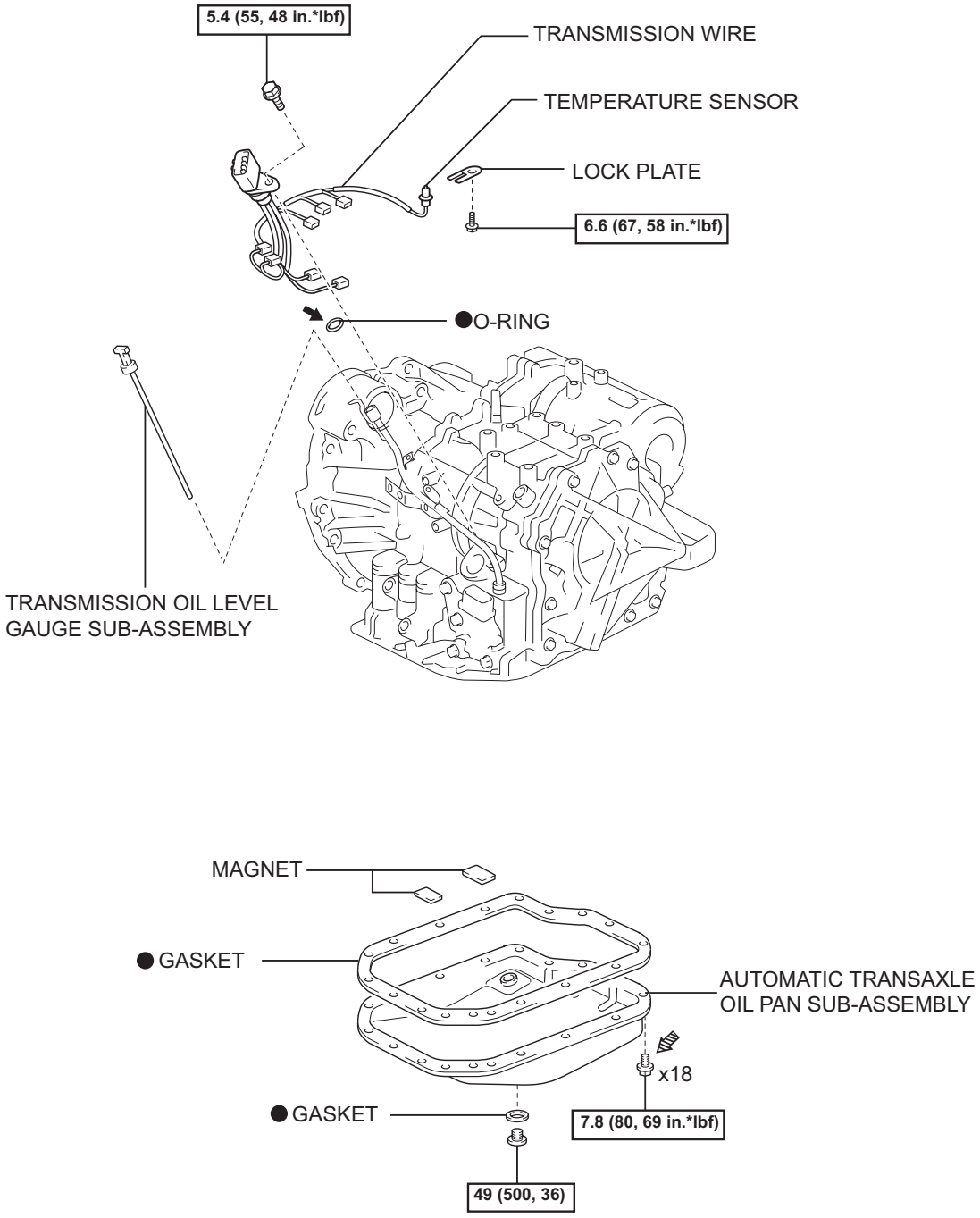

AX

REMOVAL

1. DISCONNECT CABLE FROM NEGATIVE BATTERY TERMINAL

2. REMOVE ENGINE UNDER COVER LH

3. DRAIN AUTOMATIC TRANSAXLE FLUID

(a) Remove the drain plug and gasket, and drain the ATF.

(b) Install a new gasket and the drain plug.
Torque: 49 N*m (500 kgf*cm, 36 ft.*lbf)

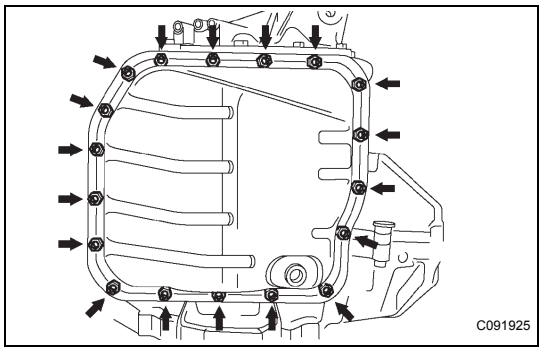

4. REMOVE AUTOMATIC TRANSAXLE OIL PAN SUB-ASSEMBLY

(a) Remove the 18 bolts, oil pan and gasket.
NOTICE:
Some fluid will remain in the oil pan. Carefully remove the oil pan so that fluid remaining in the pan does not spill out.

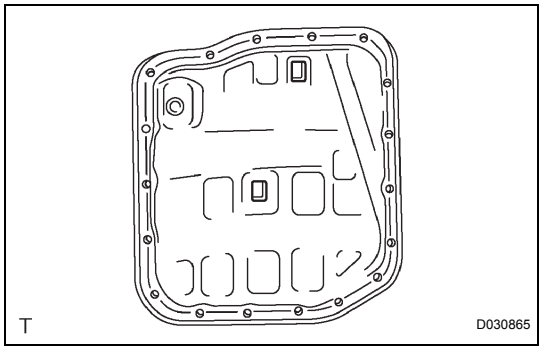

(b) Remove the 2 magnets from the oil pan.

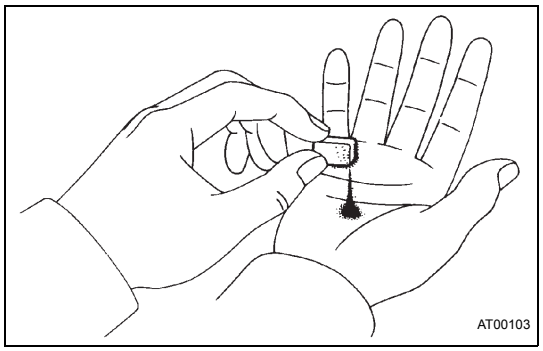

(c) Examine particles in the pan.

(1) Collect any steel chips using the removed magnets. Look carefully at the chips and particles in the pan and on the magnets to see the type of wear which might be found in the transaxle.
Result:
Steel (magnetic):
Wear of the bearing, gear or plate
Brass (non-magnetic):
Wear of the bearing

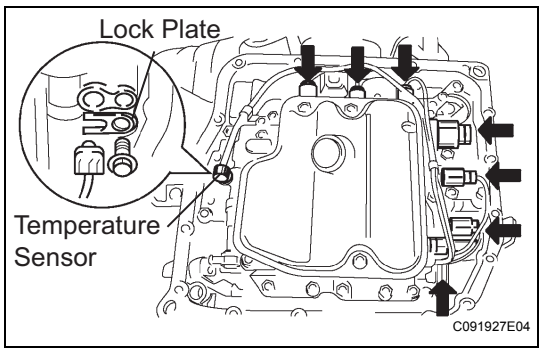

5. DISCONNECT TRANSMISSION WIRE

(a) Disconnect the 7 shift solenoid valve connectors.

(b) Remove the bolt and lock plate, and disconnect the ATF temperature sensor.

AX

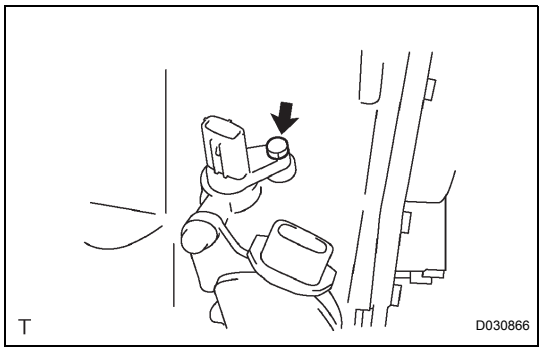

6. REMOVE TRANSMISSION WIRE

(a) Disconnect the transmission wire connector.
(b) Remove the bolt and transmission wire.
(c) Remove the O-ring from the transmission wire.

INSTALLATION

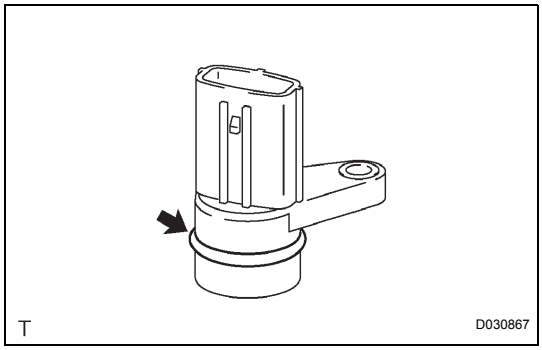

1. INSTALL TRANSMISSION WIRE

(a) Coat the O-ring of the transmission wire connector with ATF and install it.

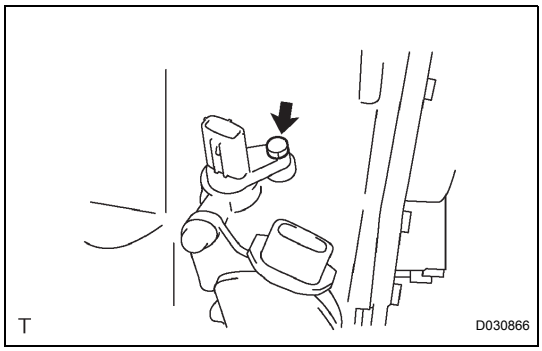

(b) Install the transmission wire with the bolt.
Torque: 5.4 N*m (55 kgf*cm, 48 ft.*lbf)

AX

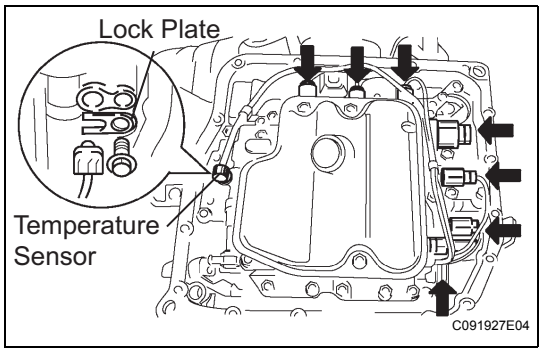

2. CONNECT TRANSMISSION WIRE

(a) Coat the O-ring of the ATF temperature sensor with ATF.
(b) Install the ATF temperature sensor with the lock plate and bolt.
Torque: 6.6 N*m (67 kgf*cm, 58 ft.*lbf)
(c) Connect the 7 shift solenoid valve connectors.

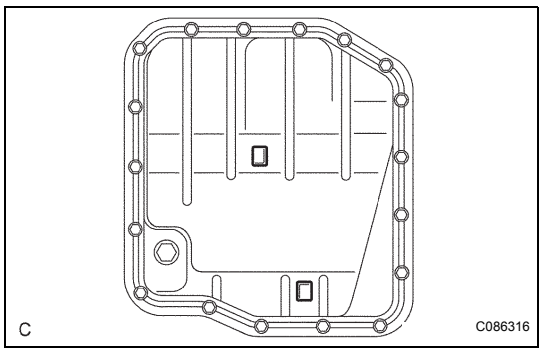

3. INSTALL AUTOMATIC TRANSAXLE OIL PAN SUB-ASSEMBLY

(a) Install the 2 magnets in the oil pan.
(b) Apply seal packing to the 18 bolts.
Seal packing:
THREE BOND 2430 or equivalent

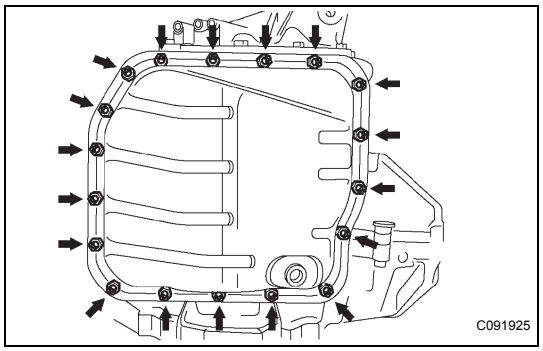

(c) Using a new gasket, install the oil pan to the transaxle case with the 18 bolts.
Torque: 7.8 N*m (80 kgf*cm, 69 in.*lbf)
NOTICE:
Apply seal packing to the bolts and tighten them within 10 minutes of application.

4. **CONNECT CABLE TO NEGATIVE BATTERY TERMINAL**

5. **ADD AUTOMATIC TRANSAXLE FLUID**

6. **INSPECT AUTOMATIC TRANSAXLE FLUID (See page AX-120)**

7. **INSTALL ENGINE UNDER COVER LH**

8. **RESET MEMORY**
HINT:
(See page AX-1)

9. **PERFORM INITIALIZATION**
HINT:
Some systems need initialization after reconnecting the cable to the negative battery terminal (See page AX-1).

AX

VALVE BODY ASSEMBLY

COMPONENTS

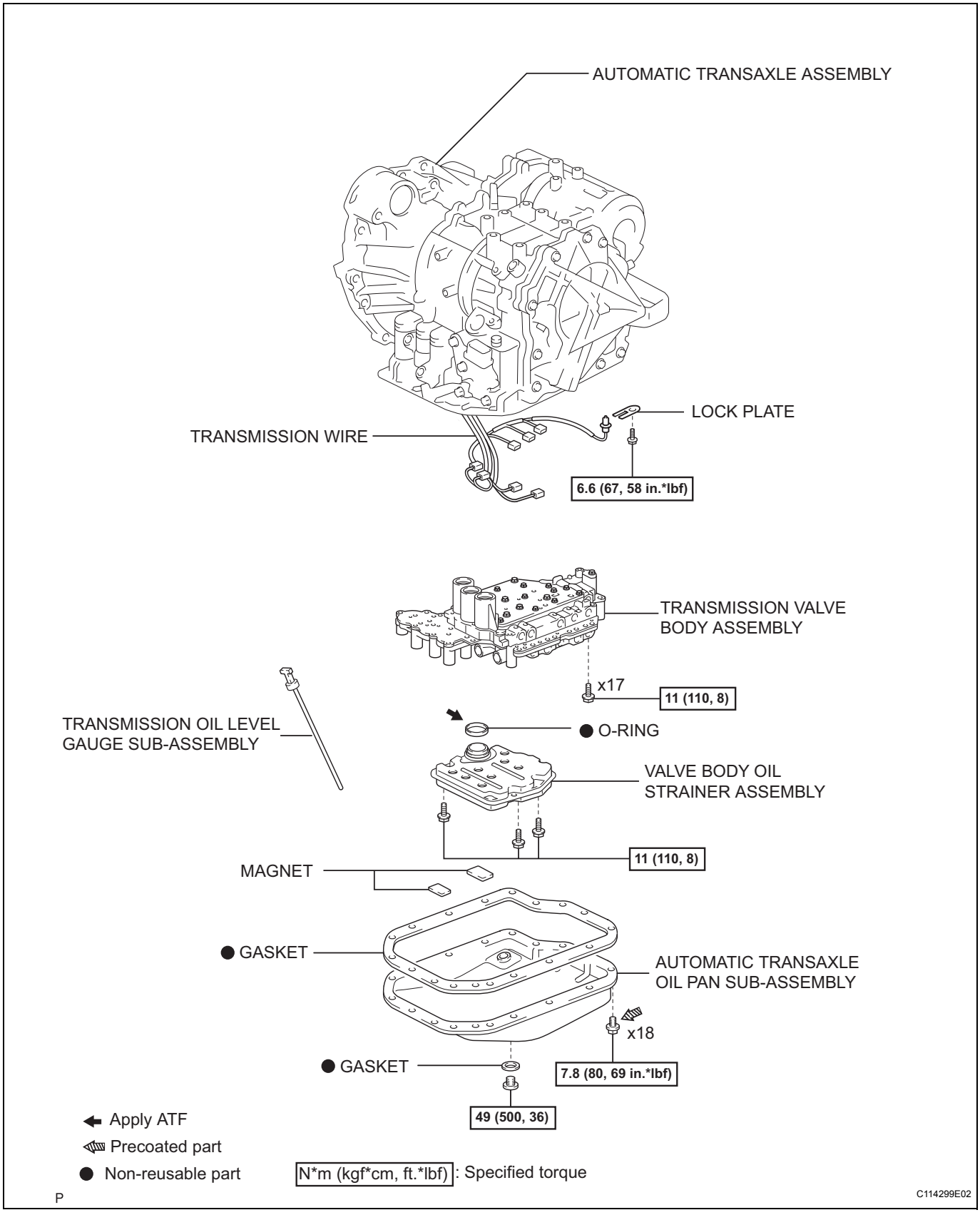

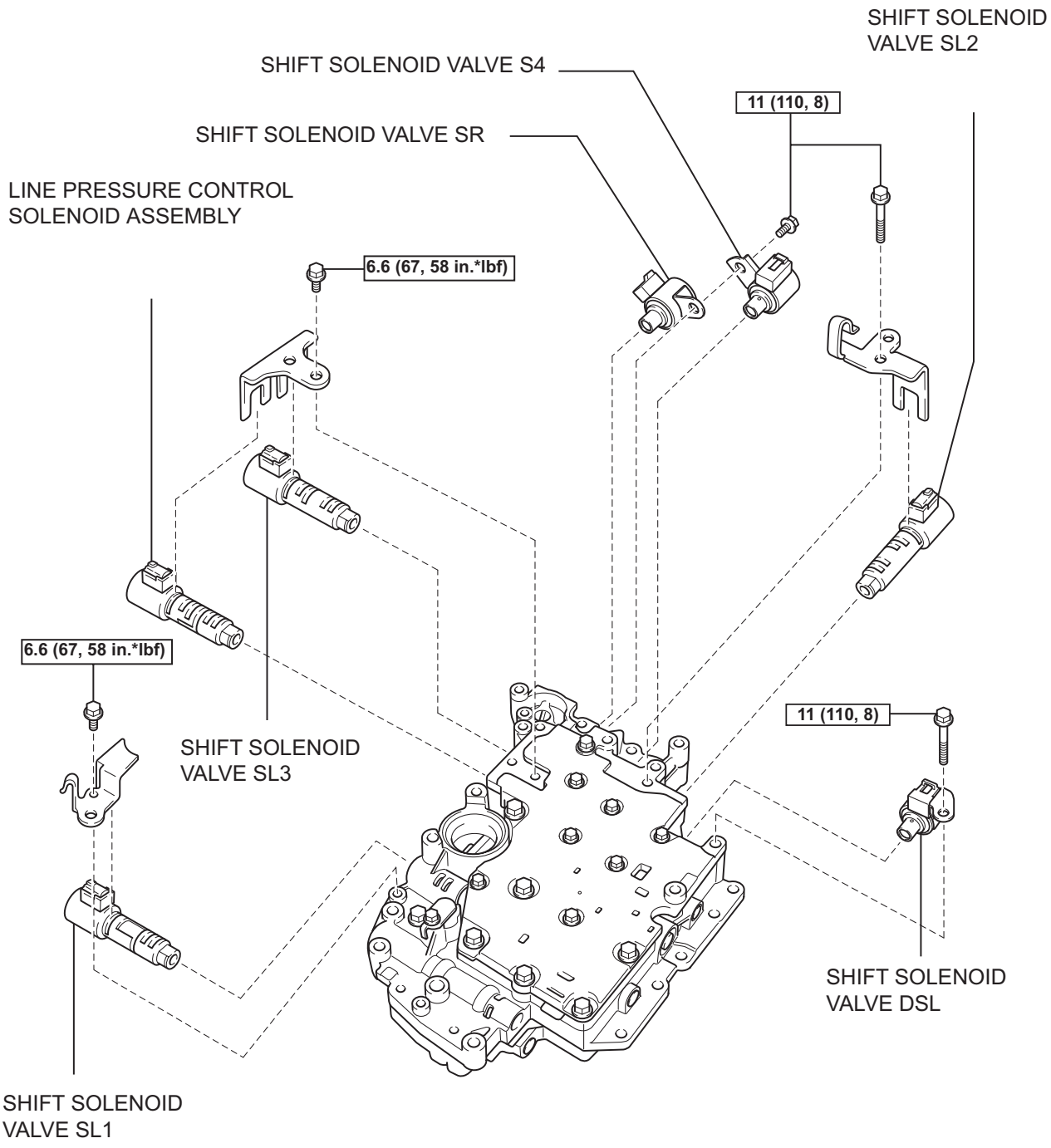

N*m (kgf*cm, ft.*lbf) : Specified torque

N

C114870E06

AX

REMOVAL

1. **REMOVE ENGINE UNDER COVER RH**
2. **DISCONNECT CABLE FROM NEGATIVE BATTERY TERMINAL**
3. **DRAIN AUTOMATIC TRANSAXLE FLUID (See page AX-131)**
4. **REMOVE AUTOMATIC TRANSAXLE OIL PAN SUB-ASSEMBLY**

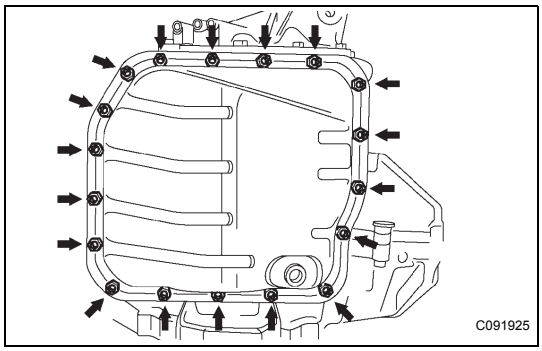

(a) Remove the 18 bolts, oil pan and gasket.

NOTICE:
Some fluid will remain in the oil pan. Carefully remove the oil pan so that the fluid remaining in the pan does not spill out.

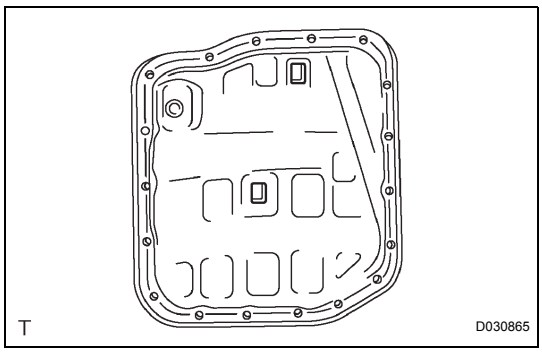

(b) Remove the 2 magnets from the oil pan.

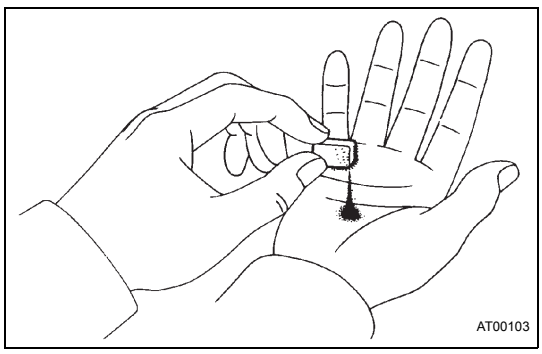

(c) Examine particles in the pan.
   (1) Collect any steel chips using the removed magnets. Look carefully at the chips and particles in the pan and on the magnets to see the type of wear which might be found in the transaxle.
   Result:
   Steel (magnetic):
   Wear of the bearing, gear or plate
   Brass (non-magnetic):
   Wear of the bearing

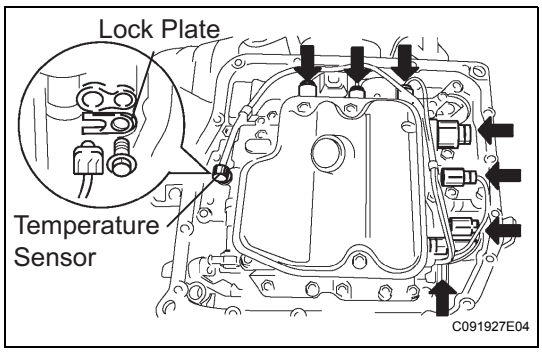

5. **DISCONNECT TRANSMISSION WIRE**
   (a) Disconnect the 7 shift solenoid valve connectors.
   (b) Remove the bolt and lock plate, and disconnect the ATF temperature sensor.

AX

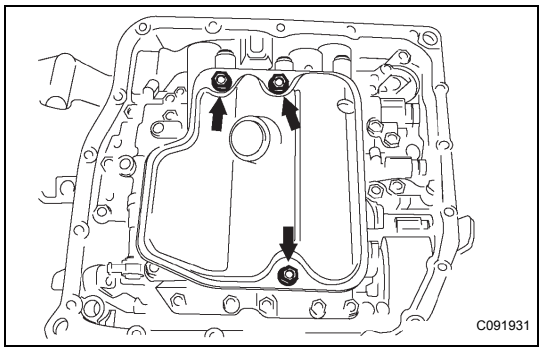

6. REMOVE VALVE BODY OIL STRAINER ASSEMBLY

(a) Remove the 3 bolts and oil strainer.

NOTICE:

Be careful when removing the oil strainer as fluid will come out.

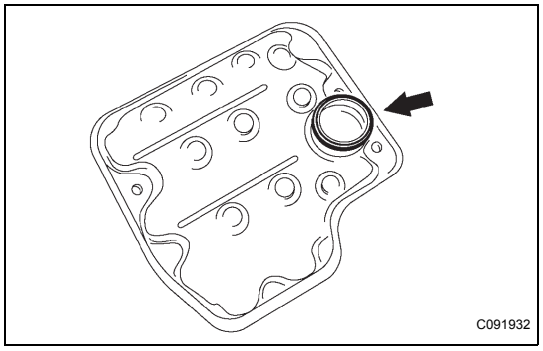

(b) Remove the O-ring from the valve body oil strainer assembly.

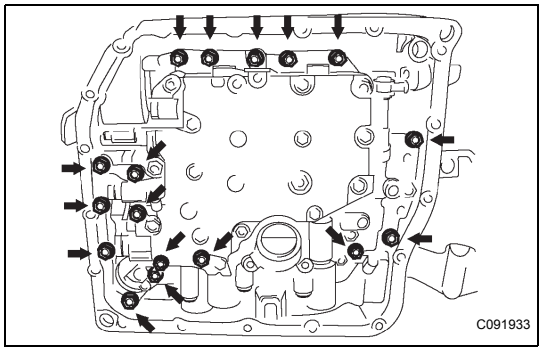

7. REMOVE TRANSMISSION VALVE BODY ASSEMBLY

(a) Support the valve body assembly and remove the 17 bolts and the transmission valve body assembly.

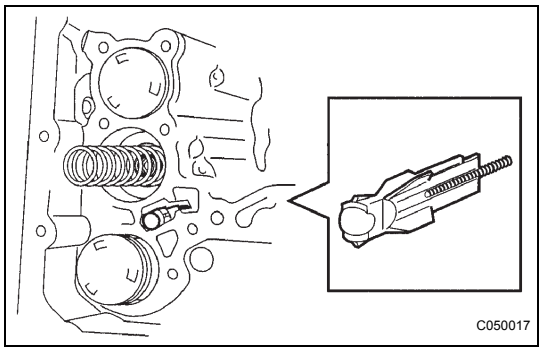

(b) Remove the check ball body and the spring.

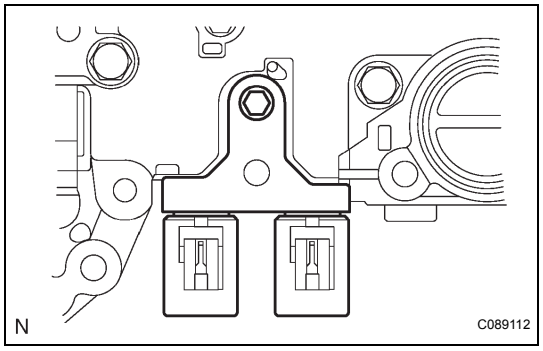

(c) Remove the bolt and lock plate from the valve body assembly.

(d) Remove the shift solenoid valve SL3 and SLT from the valve body assembly.

AX

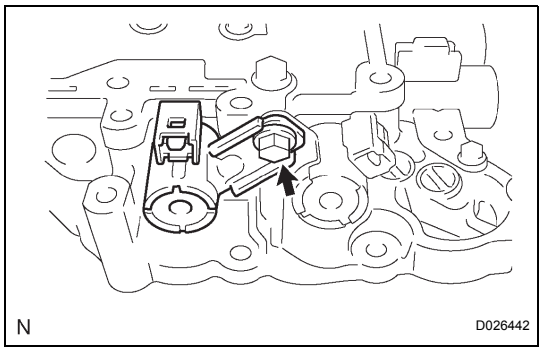

(e) Remove the bolt and shift solenoid valve S4 from the valve body assembly.

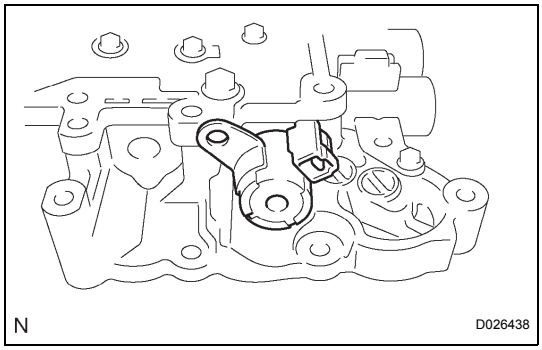

(f) Remove the shift solenoid valve SR from the valve body assembly.

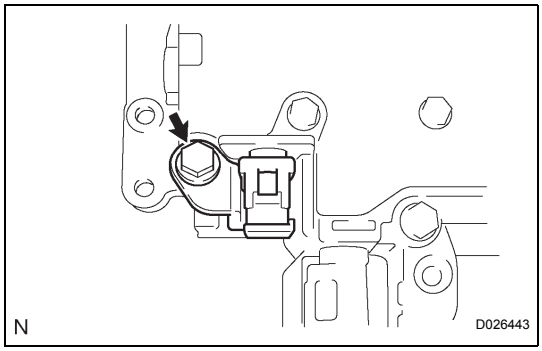

(g) Remove the bolt and shift solenoid valve DSL from the valve body assembly.

AX

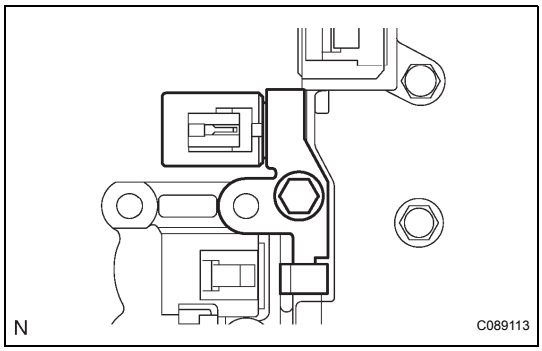

(h) Remove the bolt and shift solenoid valve SL2 from the valve body assembly.

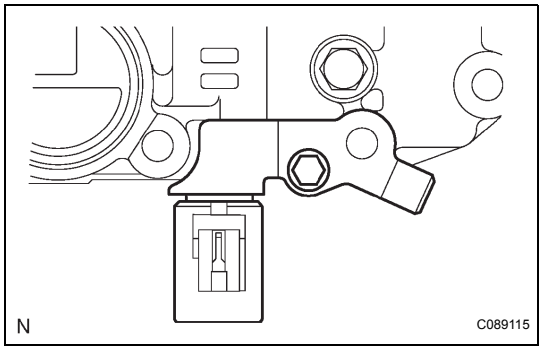

(i) Remove the bolt and shift solenoid valve SL1 from the valve body assembly.

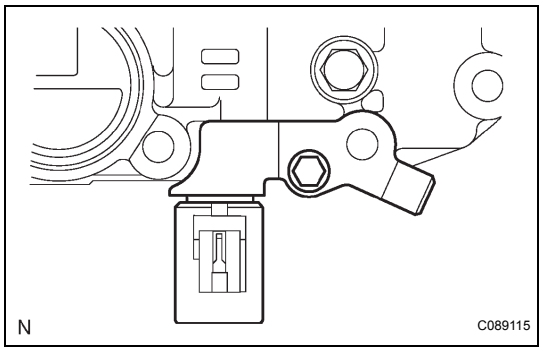

INSTALLATION

1. INSTALL TRANSMISSION VALVE BODY ASSEMBLY

(a) Install the shift solenoid valve SL1 to the valve body assembly with the bolt.
Torque: 6.6 N*m (67 kgf*cm, 58 in.*lbf)

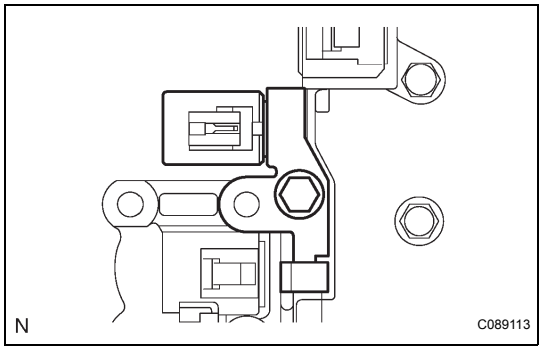

(b) Install the shift solenoid valve SL2 to the valve body assembly with the bolt.
Torque: 11 N*m (110 kgf*cm, 8 ft.*lbf)

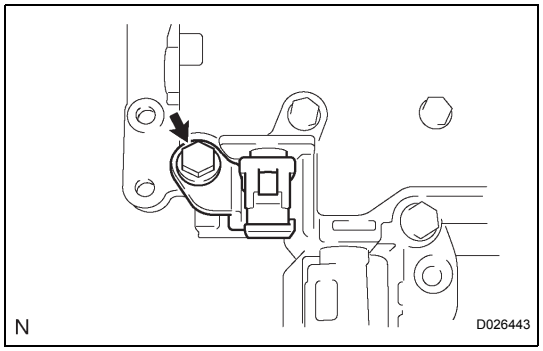

(c) Install the shift solenoid valve DSL to the valve body assembly with the bolt.
Torque: 11 N*m (110 kgf*cm, 8 ft.*lbf)

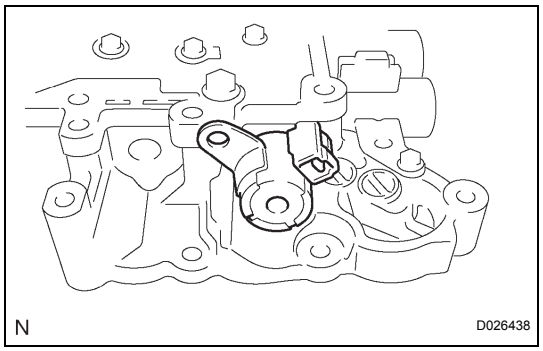

(d) Install the shift solenoid valve SR to the valve body assembly.

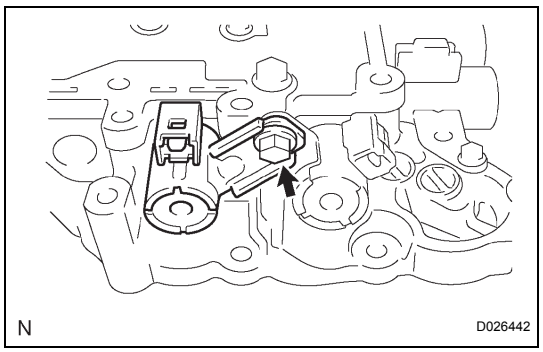

(e) Install the shift solenoid valve S4 to the valve body assembly with the bolt.
Torque: 11 N*m (110 kgf*cm, 8 ft.*lbf)

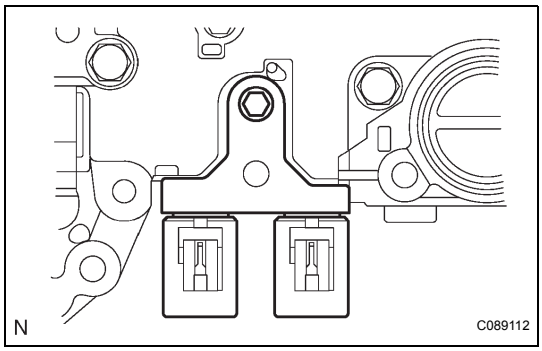

(f) Install the shift solenoid valve SL3 and SLT to the valve body assembly.
(g) Install the lock plate to the valve body assembly with the bolt.
Torque: 6.6 N*m (67 kgf*cm, 58 in.*lbf)

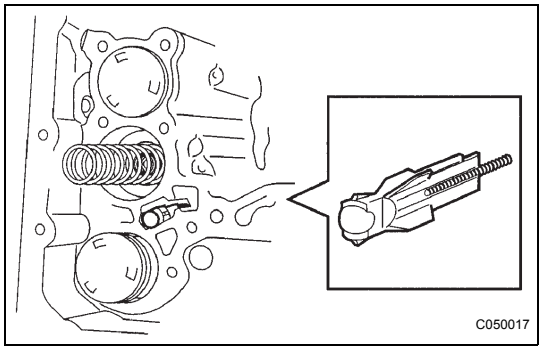

(h) Install the spring and check ball body.

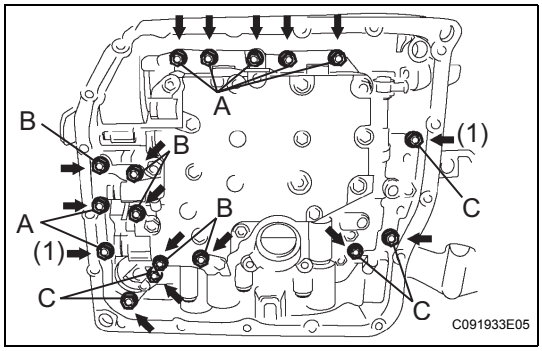

(i) Align the groove of the manual valve with the pin of the lever.
(j) Install the 17 bolts.
Torque: 11 N*m (110 kgf*cm, 8 ft.*lbf)
NOTICE:
- **Push the valve body against the accumulator piston springs and check ball body to install the valve body.**
- **First, temporarily tighten the bolts marked with (1) in the illustration because they are positioning bolts.**

Bolt length:
Bolt A:
41 mm (1.614 in.)
Bolt B:
57 mm (2.244 in.)
Bolt C:
25 mm (0.984 in.)

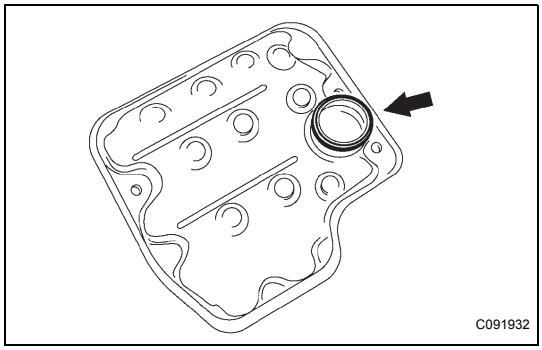

2. INSTALL VALVE BODY OIL STRAINER ASSEMBLY
(a) Coat a new O-ring with ATF.
(b) Install the O-ring to the oil strainer.

AX

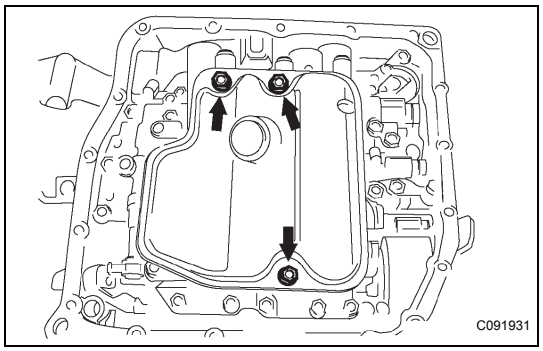

(c) Install the oil strainer with the 3 bolts.
Torque: 11 N*m (110 kgf*cm, 8 ft.*lbf)

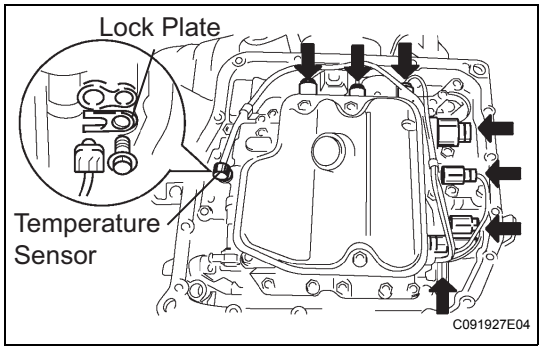

3. INSTALL TRANSMISSION WIRE
(a) Coat the O-ring with ATF.
(b) Install the ATF temperature sensor with the lock plate and bolt.
Torque: 6.6 N*m (67 kgf*cm, 58 in.*lbf)
(c) Connect the 7 shift solenoid valve connectors.

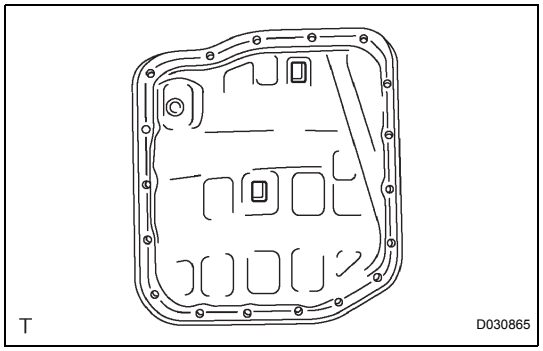

4. INSTALL AUTOMATIC TRANSAXLE OIL PAN SUB-ASSEMBLY
(a) Install the 2 magnets in the oil pan.
(b) Apply seal packing or equivalent to the 18 bolts.
Seal packing:
THREE BOND 2430 or equivalent

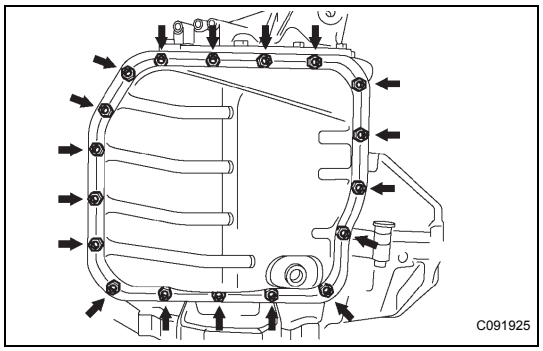

(c) Install the oil pan and new gasket with the 18 bolts to the transaxle case.
Torque: 7.8 N*m (80 kgf*cm, 69 in.*lbf)
NOTICE:
Tighten the bolts within 10 minutes of sealant application.

5. CONNECT CABLE TO NEGATIVE BATTERY TERMINAL

6. ADD AUTOMATIC TRANSAXLE FLUID

7. CHECK FLUID LEVEL IN AUTOMATIC TRANSAXLE (See page AX-120)

8. INSTALL ENGINE UNDER COVER RH

9. RESET MEMORY
HINT:
(See page AX-1)

10. PERFORM INITIALIZATION
HINT:
Some systems need initialization after reconnecting the cable to the negative battery terminal (See page AX-1).

AX

SHIFT LOCK SYSTEM

ON-VEHICLE INSPECTION

1. CHECK SHIFT LOCK OPERATION

(a) Move the shift lever to the P position.
(b) Turn the ignition switch to the LOCK position.
(c) Check that the shift lever cannot be moved to any position other than P.
(d) Turn the ignition switch to the on position, depress the brake pedal and check that the shift lever can be moved to another position. If operation can not be done as specified, inspect the shift lock control unit.

2. CHECK SHIFT LOCK RELEASE BUTTON OPERATION

(a) Using a small screwdriver, remove the shift lock release cover.
(b) When operating the shift lever with the shift lock release button pressed, check that the lever can be moved to any position other than P.
If operation can not be done as specified, check the shift lever assembly installation condition.

3. CHECK KEY INTERLOCK OPERATION

(a) Turn the ignition switch to the ON position.
(b))Depress the brake pedal and move the shift lever to any position other than P.
(c) Check that the ignition key cannot be turned to the LOCK position.
(d) Move the shift lever to the P position, turn the ignition key to the LOCK position and check that the ignition key can be removed.
If operation cannot be done as specified, inspect the shift lock control unit.

AX

4. INSPECT SHIFT LOCK CONTROL UNIT ASSEMBLY

(a) Measure the voltage according to the value(s) in the table below.
HINT:
Do not disconnect the shift lock control unit assembly connector.

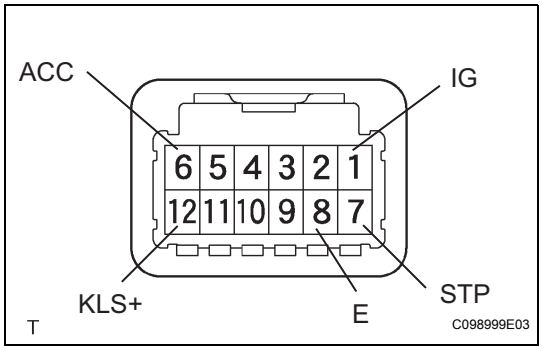

Voltage

Terminal	Measuring Condition	Voltage (V)
6 (ACC) - 8 (E)	Ignition switch ACC	10 to 14
6 (ACC) - 8 (E)	Ignition switch OFF	Below 1
7 (STP) - 8 (E)	Depress brake pedal	10 to 14
7 (STP) - 8 (E)	Release brake pedal	Below 1
12 (KLS+) - 8 (E)	1. Ignition switch ACC and shift lever P position 2. Ignition switch ACC and shift lever except P position 3. Ignition switch ACC and shift lever except P position (After approx. 1 second)	Below 1 7.5 to 11 6 to 9

Terminal	Measuring Condition	Voltage (V)
1 (IG) - 8 (E)	Ignition switch ON	10 to 14
1 (IG) - 8 (E)	Ignition switch OFF	Below 1

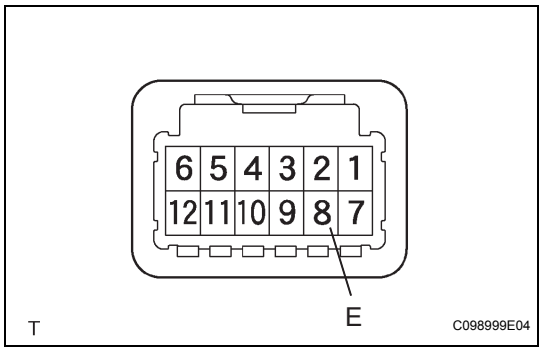

(b) Measure the resistance according to the value(s) in the table below.
HINT:
Do not disconnect the shift lock control unit assembly connector.
If operation cannot be done as specified, replace the shift lever assembly.

Resistance

Terminal	Measuring Condition	Specified Value
8 (E) - Body ground	Always	Below 1 Ω

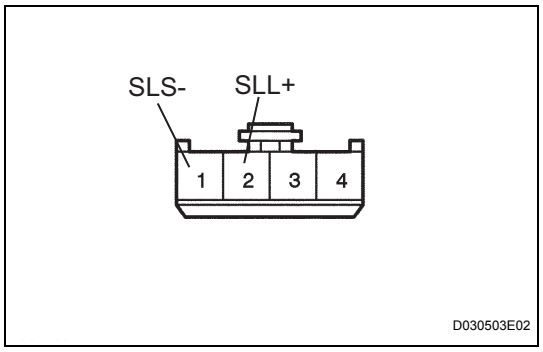

5. INSPECT SHIFT LOCK SOLENOID

(a) Disconnect the solenoid connector.
(b) Connect the SLL+ (2) terminal to the battery positive (+) terminal, and the SLS- (1) terminal to the battery negative (-) terminal, and apply about 12 V between the SLL+ and SLS- terminals.
(c) Check that operation noise can be heard from the solenoid.
If the solenoid does not operate, replace the solenoid.

TRANSMISSION CONTROL CABLE ASSEMBLY

COMPONENTS

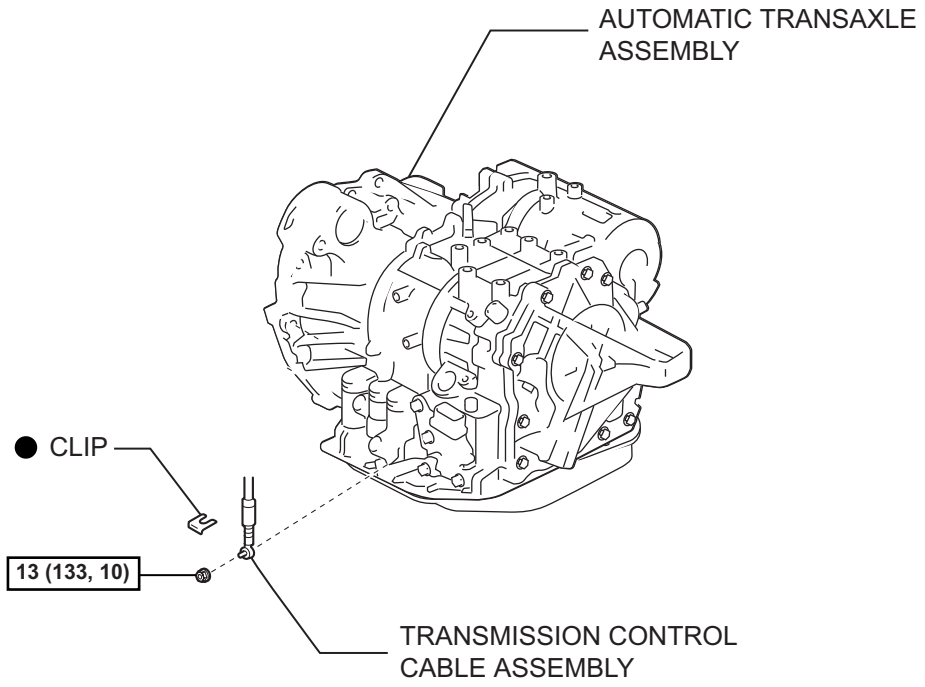

AX

● Non-reusable part

N*m (kgf*cm, ft.*lbf) : Specified torque

C126460E01

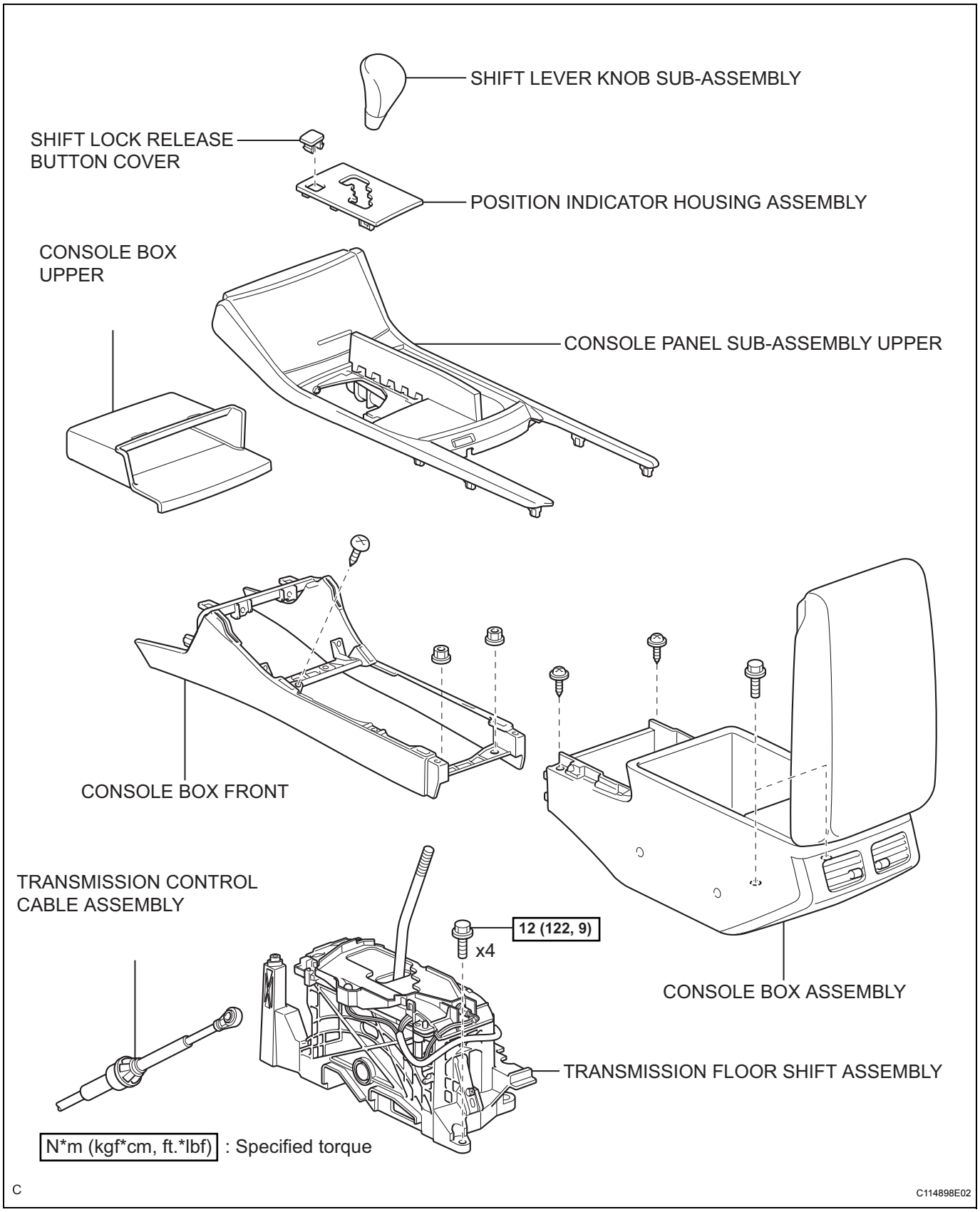
SHIFT LEVER KNOB SUB-ASSEMBLY
SHIFT LOCK RELEASE BUTTON COVER
POSITION INDICATOR HOUSING ASSEMBLY
CONSOLE BOX UPPER
CONSOLE PANEL SUB-ASSEMBLY UPPER
CONSOLE BOX FRONT
TRANSMISSION CONTROL CABLE ASSEMBLY
12 (122, 9)
x4
CONSOLE BOX ASSEMBLY
TRANSMISSION FLOOR SHIFT ASSEMBLY
N*m (kgf*cm, ft.*lbf) : Specified torque
C
C114898E02

AX

REMOVAL

1. **DISCONNECT CABLE FROM NEGATIVE BATTERY TERMINAL**
2. **REMOVE SHIFT LEVER KNOB SUB-ASSEMBLY (See page IP-12)**
3. **REMOVE POSITION INDICATOR HOUSING ASSEMBLY (See page IP-12)**
4. **REMOVE CONSOLE BOX UPPER**
5. **REMOVE CONSOLE PANEL SUB-ASSEMBLY UPPER (See page IP-13)**
6. **REMOVE CONSOLE BOX ASSEMBLY (See page IP-13)**
7. **REMOVE CONSOLE BOX FRONT (See page IP-14)**
8. **REMOVE AIR BAG SENSOR ASSEMBLY CENTER (See page RS-354)**
9. **REMOVE AIR CLEANER ASSEMBLY (See page EM-28)**
10. **REMOVE INTAKE AIR RESONATOR SUB-ASSEMBLY (See page EM-28)**
11. **REMOVE ENGINE UNDER COVER LH**
12. **REMOVE TRANSMISSION CONTROL CABLE ASSEMBLY**
    (a) Remove the 2 bolts and disconnect the shift cable grommet retainer No. 2.

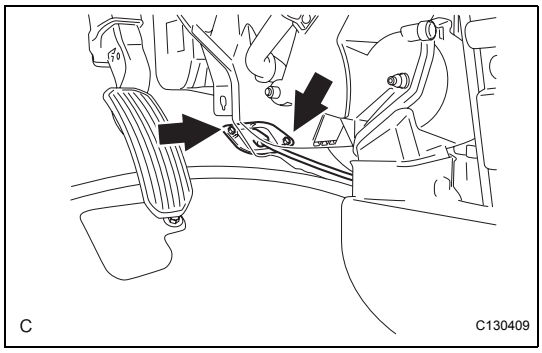

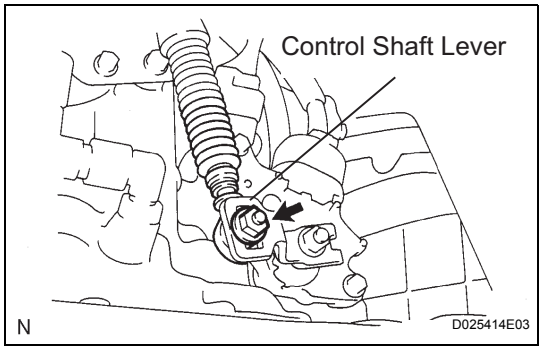

(b) Remove the nut from the control shaft lever.
(c) Disconnect the transmission control cable assembly from the control shaft lever.

AX

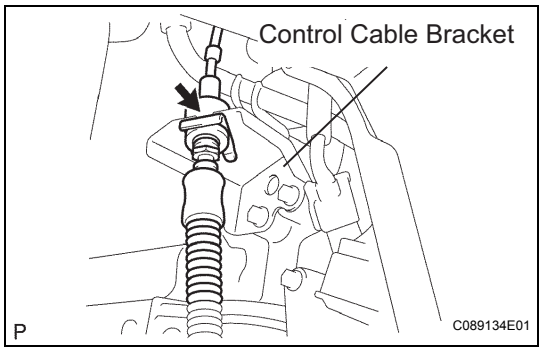

(d) Remove the clip and disconnect the transmission control cable assembly from the control cable bracket.

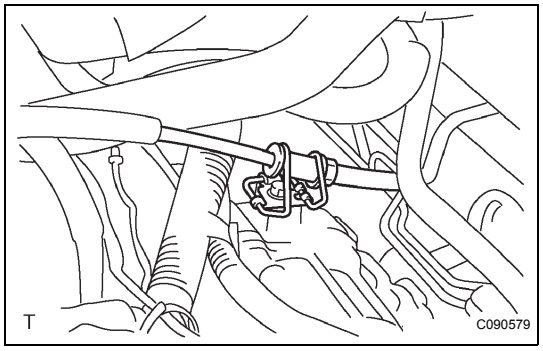

(e) Disconnect the control cable from the control cable clamp.

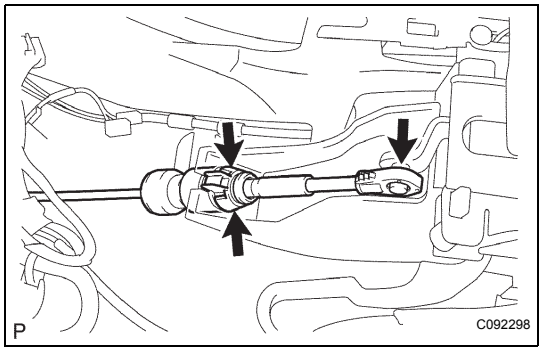

(f) Disconnect the floor shift cable from the transmission floor shift assembly.
(g) Pull out the control cable from the body.
(h) Remove the shift cable grommet retainer No. 2.

ADJUSTMENT

1. INSPECT SHIFT LEVER POSITION

(a) When shifting from the P to R position only with the ignition switch on and brake pedal depressed, make sure that the shift lever moves smoothly and can be moderately operated.

(b) Start the engine and make sure that the vehicle moves forward when shifting from the N to D position and moves rearward when shifting to the R position.

2. ADJUST SHIFT LEVER POSITION

(a) Loosen the nut on the control shaft lever.

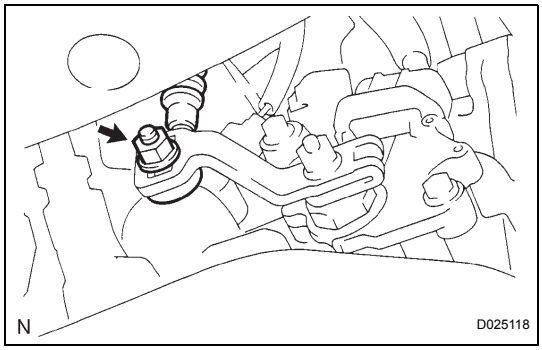

(b) Push the control shaft fully downward.

(c) Return the control shaft lever 2 notches to the N position.

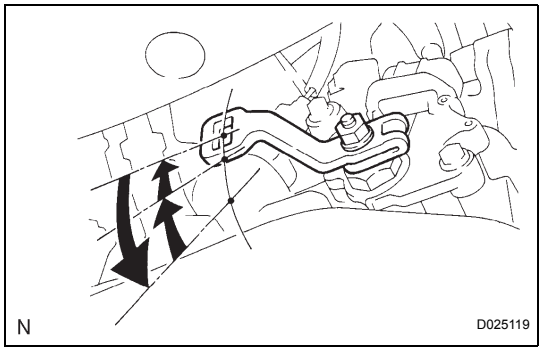

AX

(d) While pushing the control cable end up with the shift lever in the N position, install it to the control shaft lever with the nut.

Torque: 15 N*m (150 kgf*cm, 10 ft.*lbf)

NOTICE:

- **If the control cable end is excessively pushed up, the shift lever can not be adjusted.**
- **When tightening the nut, confirm that the control cable is properly stretched.**

(e) Start the engine and make sure that the vehicle moves forward when shifting the lever from the N to D position and moves rearward when shifting it to the R position.

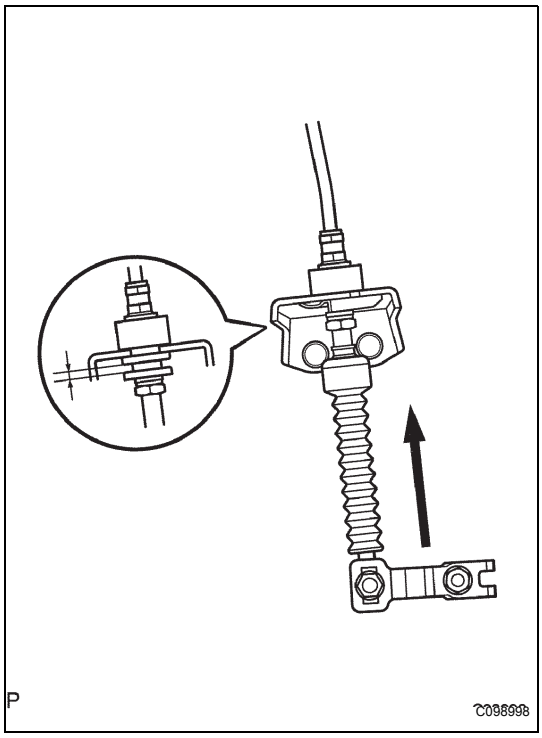

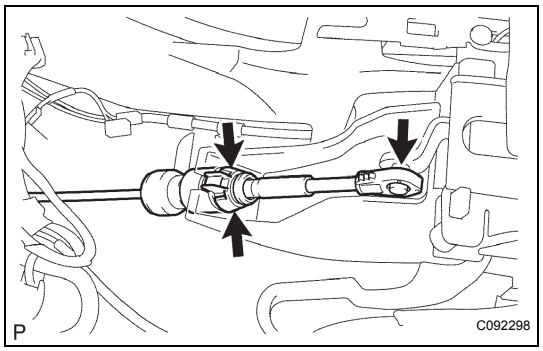

INSTALLATION

1. INSTALL TRANSMISSION CONTROL CABLE ASSEMBLY

(a) Install the shift cable grommet retainer No. 2 to the floor shift cable.

(b) Put in the control cable to the body.

(c) Install the floor shift cable as shown in the illustration.
HINT:
- Install it with the uneven surface facing up.
- Securely engage the claws.

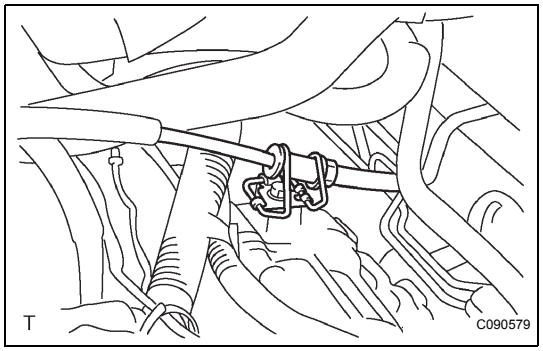

(d) Connect the control cable to the control cable clamp.

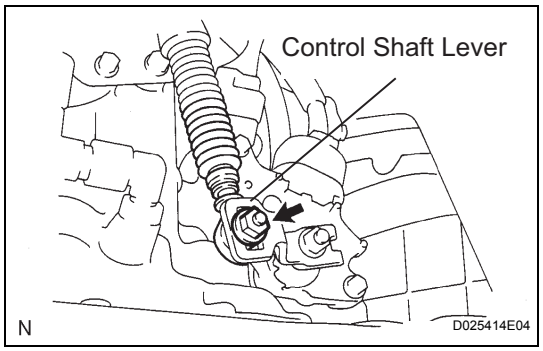

(e) Temporarily install the transmission control cable assembly to the control shaft lever with the nut.

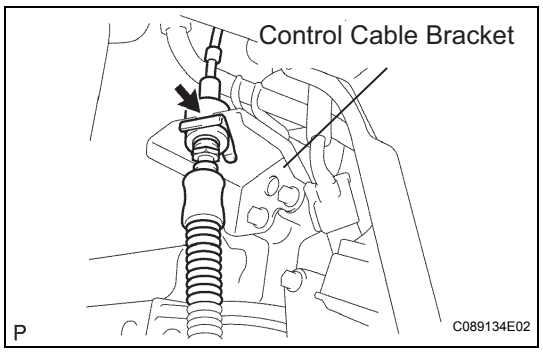

(f) Connect the transmission control cable assembly with a new clip to the bracket.

AX

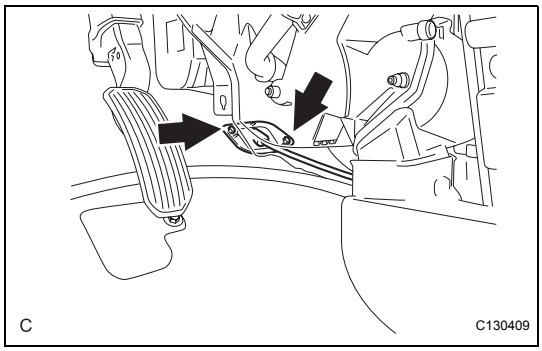

(g) Install the shift cable grommet retainer No. 2 with the 2 bolts.
Torque: 5.0 N*m (50 kgf*cm, 43 in.*lbf)

2. **INSTALL INTAKE AIR RESONATOR SUB-ASSEMBLY (See page EM-44)**
3. **INSTALL AIR CLEANER ASSEMBLY**
HINT:
(See page EM-44)
4. **INSTALL AIR BAG SENSOR ASSEMBLY CENTER**
HINT:
(See page RS-354)
5. **INSTALL CONSOLE BOX FRONT**
HINT:
(See page IP-17)
6. **INSTALL CONSOLE BOX ASSEMBLY**
HINT:
(See page IP-17)
7. **INSTALL CONSOLE PANEL SUB-ASSEMBLY UPPER**
HINT:
(See page IP-17)
8. **INSTALL CONSOLE BOX UPPER**
HINT:
(See page IP-17)
9. **INSTALL POSITION INDICATOR HOUSING ASSEMBLY**
HINT:
(See page IP-17)
10. **INSTALL SHIFT LEVER KNOB SUB-ASSEMBLY**
HINT:
(See page IP-17)
11. **CONNECT CABLE TO NEGATIVE BATTERY TERMINAL**
12. **INSPECT SHIFT LEVER POSITION (See page AX-147)**
13. **ADJUST SHIFT LEVER POSITION (See page AX-147)**

DIFFERENTIAL OIL SEAL

COMPONENTS

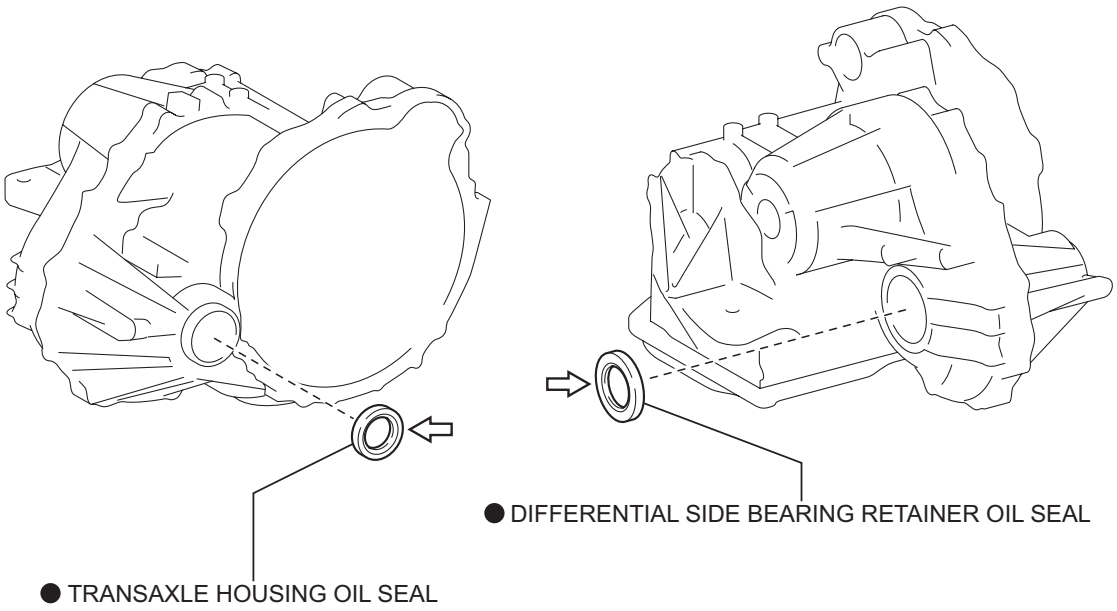

⇦ Apply MP grease

● Non-reusable part

T

C126455E01

AX

REMOVAL

1. **REMOVE FRONT WHEELS**
2. **REMOVE ENGINE UNDER COVER RH**
3. **REMOVE ENGINE UNDER COVER LH**
4. **DRAIN AUTOMATIC TRANSAXLE FLUID**
   (a) Remove the drain plug, gasket and drain ATF.
   (b) Install a new gasket and the drain plug.
   Torque: 49 N*m (500 kgf*cm, 36 ft.*lbf)
5. **REMOVE FRONT DRIVE SHAFT ASSEMBLY LH**
   HINT:
   (See page DS-6)
   SST 09520-01010, 09520-24010 (09520-32040)
6. **REMOVE FRONT DRIVE SHAFT ASSEMBLY RH**
   HINT:
   (See page DS-7)
   SST 09520-01010, 09520-24010 (09520-32040)
7. **REMOVE TRANSAXLE HOUSING OIL SEAL**
   (a) Using SST, pull out the oil seal.
   SST 09308-00010

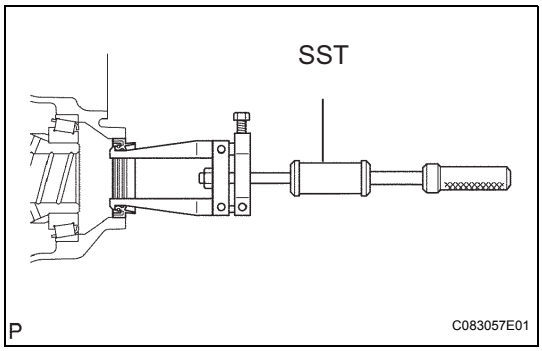

8. **REMOVE DIFFERENTIAL SIDE BEARING RETAINER OIL SEAL**
   (a) Using SST, pull out the oil seal.
   SST 09308-00010

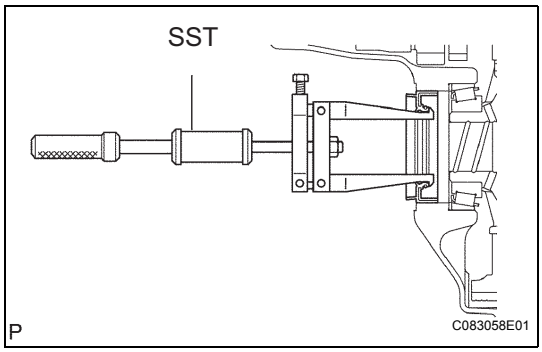

INSTALLATION

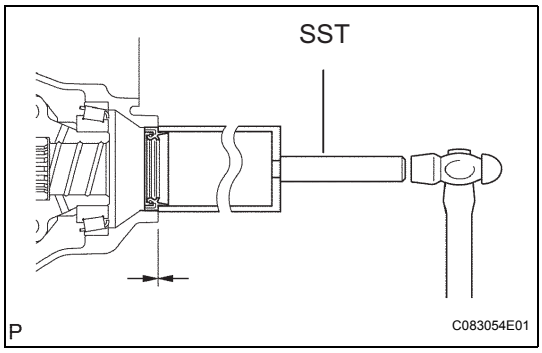

1. **INSTALL TRANSAXLE HOUSING OIL SEAL**
   (a) Using SST and a hammer, install a new oil seal.
   SST 09316-60011 (09316-00011)
   Oil seal installation depth:
   -0.5 to 0.5 mm (-0.020 to 0.020 in.)
   (b) Coat the lip of the oil seal with MP grease.

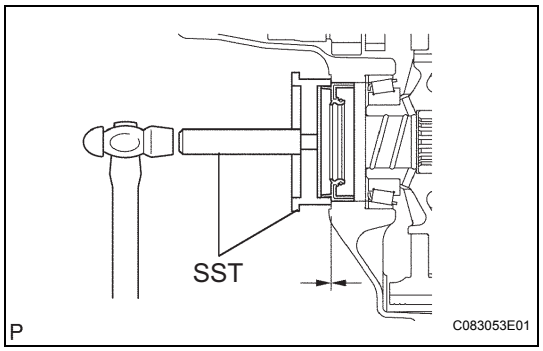

2. **INSTALL DIFFERENTIAL SIDE BEARING RETAINER OIL SEAL**
   (a) Using SST and a hammer, install a new oil seal.
   SST 09223-15020, 09950-70010 (09951-07150)
   Oil seal installation depth:
   -0.5 to 0.5 mm (-0.020 to 0.020 in.)
   (b) Coat the lip of the oil seal with MP grease.

3. **INSTALL FRONT DRIVE SHAFT ASSEMBLY LH**
   HINT:
   (See page DS-13)

4. **INSTALL FRONT DRIVE SHAFT ASSEMBLY RH**
   HINT:
   (See page DS-13)

5. **INSTALL FRONT WHEELS**
   Torque: 103 N*m (1,050 kgf*cm, 76 ft.*lbf)

6. **ADD AUTOMATIC TRANSAXLE FLUID**

7. **INSPECT AUTOMATIC TRANSAXLE FLUID (See page AX-120)**

8. **INSTALL ENGINE UNDER COVER LH**

9. **INSTALL ENGINE UNDER COVER RH**

10. **CHECK ABS SPEED SENSOR SIGNAL**
    HINT:
    (See page BC-107)

11. **PERFORM INITIALIZATION**
    HINT:
    Some systems need initialization when disconnecting the cable from the negative battery terminal (See page AX-1).

AUTOMATIC TRANSAXLE ASSEMBLY

COMPONENTS

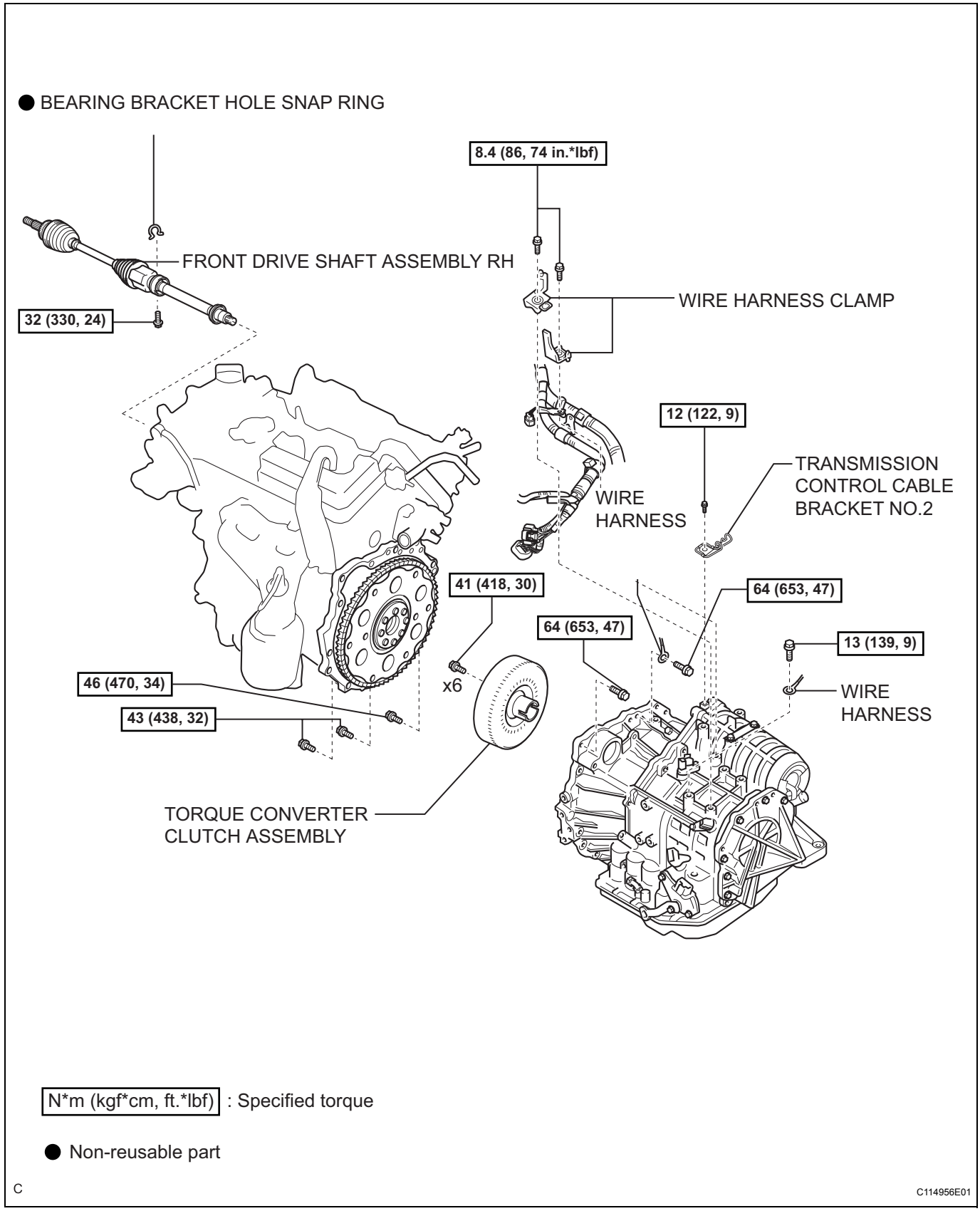

AX

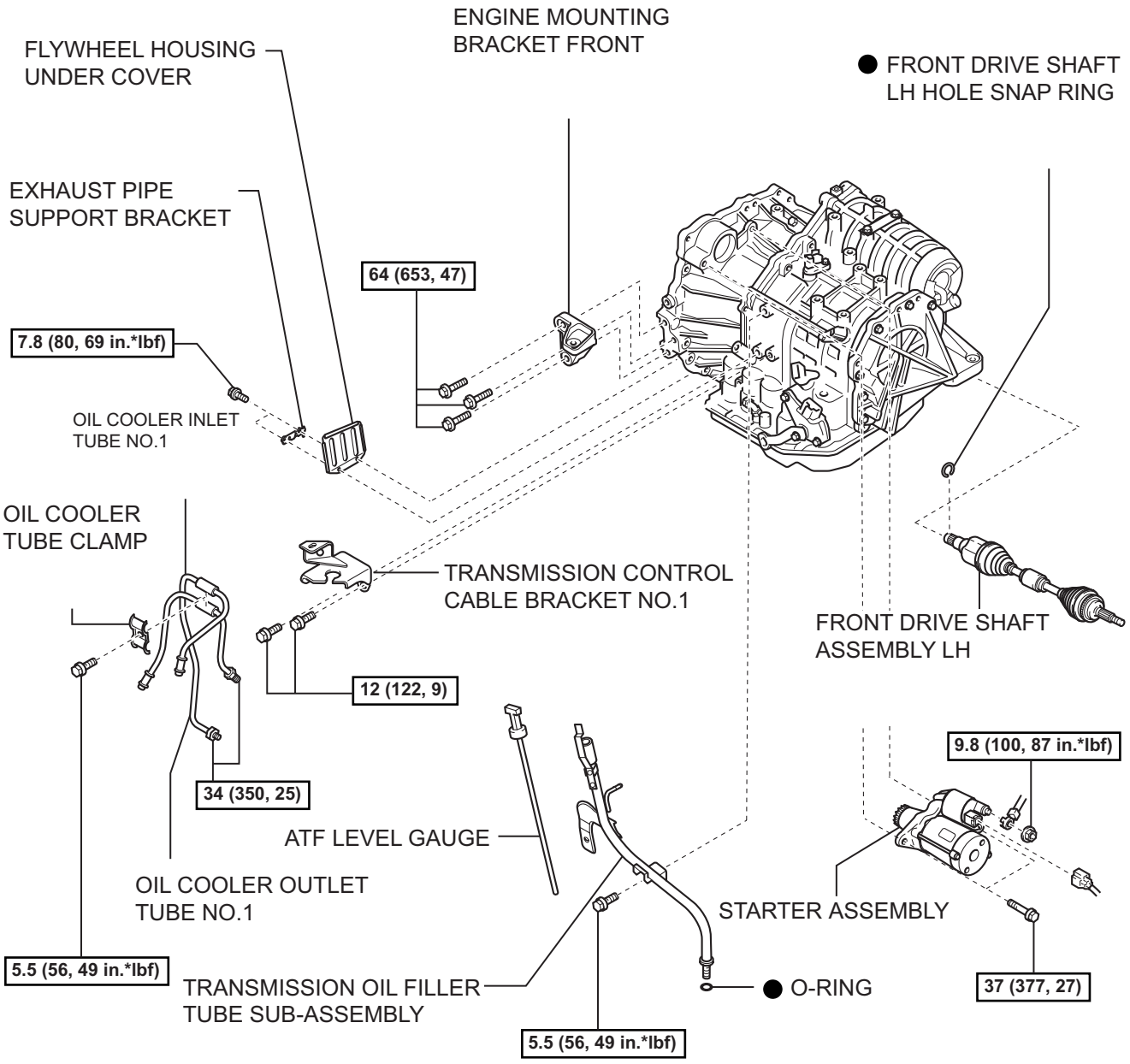

N*m (kgf*cm, ft.*lbf) : Specified torque

● Non-reusable part

C

C114897E02

AX

REMOVAL

1. **REMOVE ENGINE ASSEMBLY WITH TRANSAXLE**
HINT:
(See page EM-27)

2. **REMOVE FRONT DRIVE SHAFT ASSEMBLY LH**
HINT:
(See page DS-6)

3. **REMOVE FRONT DRIVE SHAFT ASSEMBLY RH**
HINT:
(See page DS-7)

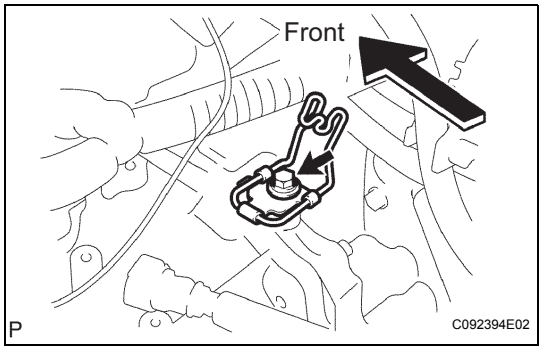

4. **REMOVE TRANSMISSION CONTROL CABLE BRACKET NO.2**
   (a) Remove the bolt and the transmission control cable bracket No.2.

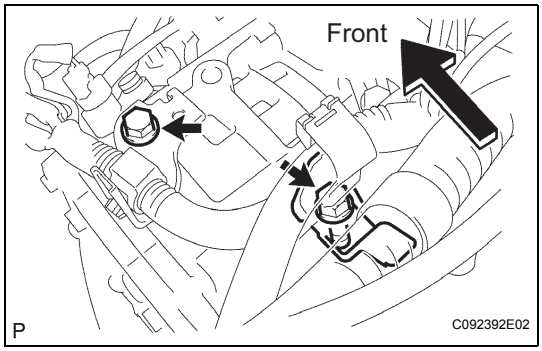

5. **REMOVE WIRE HARNESS CLAMP**
   (a) Disconnect the wire harnesses from the 2 clamps.
   (b) Remove the 4 bolts and 4 clamps.

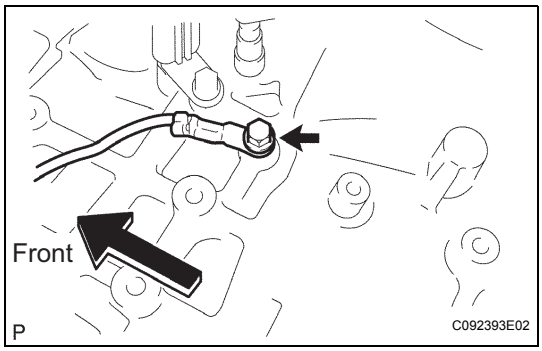

6. **DISCONNECT WIRE HARNESS**
   (a) Remove the bolt and disconnect the wire harness.

AX

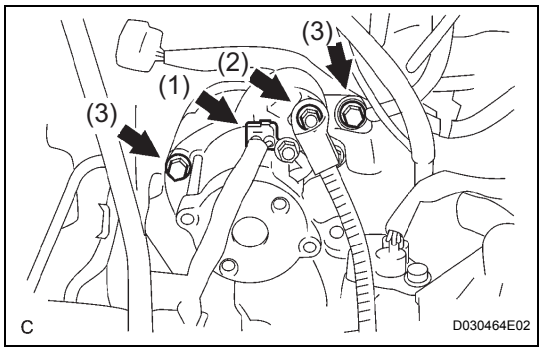

7. REMOVE STARTER ASSEMBLY

(a) Disconnect the connector (1).
(b) Remove the nut (2) and disconnect the starter wire.
(c) Remove the 2 bolts (3) and starter assembly.

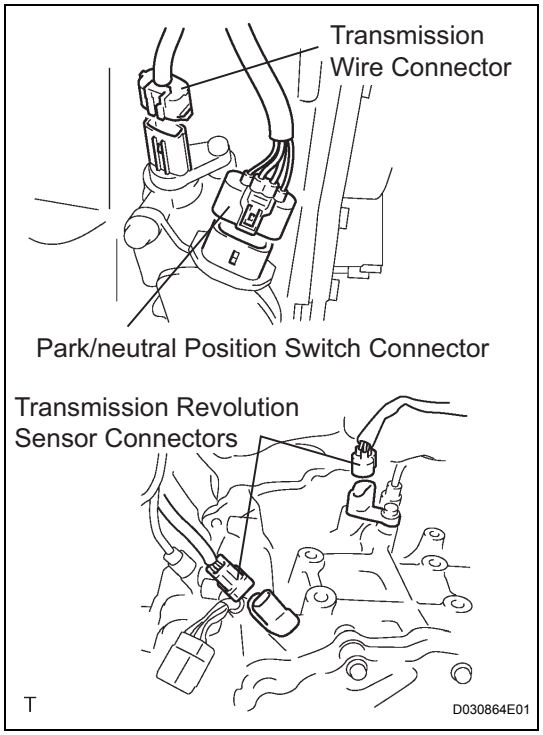

8. DISCONNECT CONNECTORS

(a) Disconnect the transmission wire connector.
(b) Disconnect the park/neutral position switch connector.
(c) Disconnect the 2 transmission revolution sensor connectors.

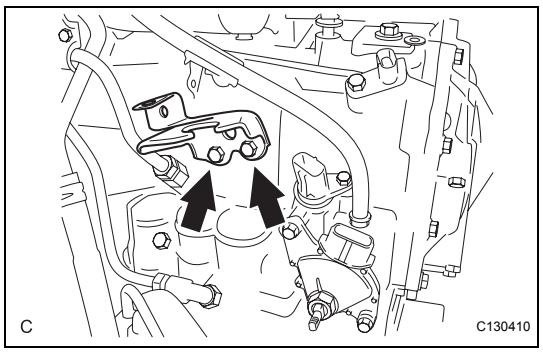

9. REMOVE TRANSMISSION CONTROL CABLE BRACKET NO.1

(a) Remove the 2 bolts and transmission control cable bracket No.1.

AX

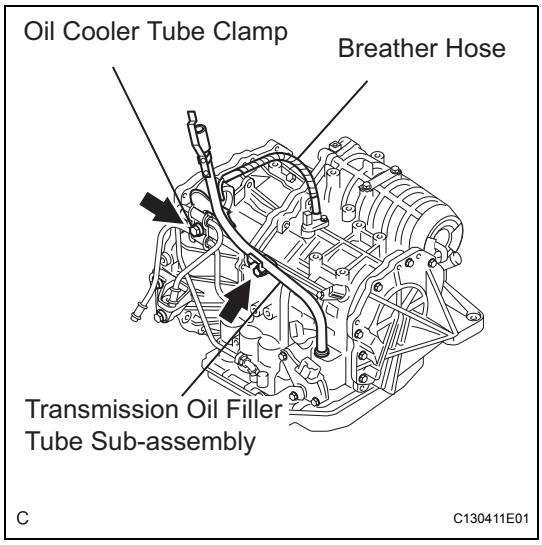

10. REMOVE TRANSMISSION OIL FILLER TUBE SUB-ASSEMBLY

(a) Remove the ATF level gauge.
(b) Remove the bolt and oil cooler tube clamp.
(c) Disconnect the breather hose.
(d) Remove the bolt and transmission oil filter tube sub-assembly.
(e) Remove the O-ring from the oil filter tube sub-assembly.

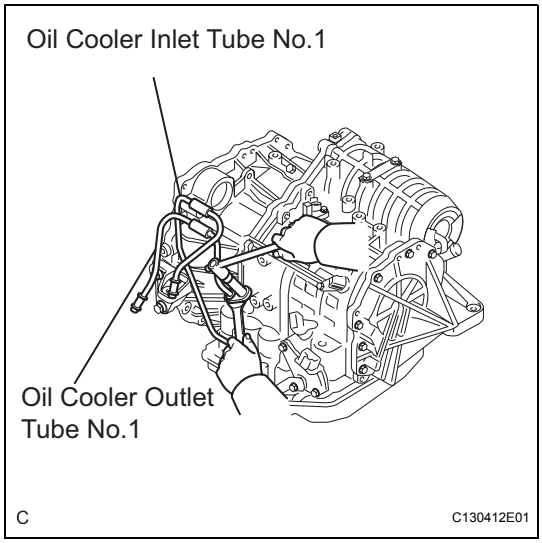

11. REMOVE OIL COOLER INLET TUBE NO.1

(a) Using SST and a wrench, disconnect the oil cooler inlet tube No.1.
SST 09023-12701

12. REMOVE OIL COOLER OUTLET TUBE NO.1

(a) Using SST and a wrench, disconnect the oil cooler outlet tube No.1.
SST 09023-12701

AX

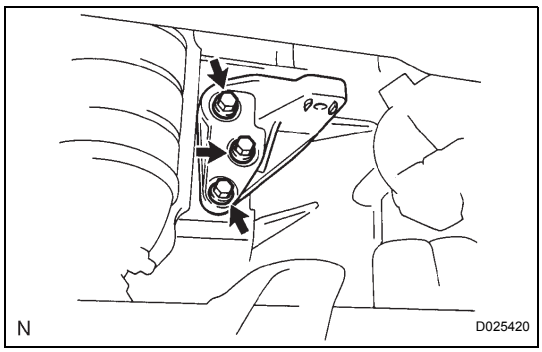

13. REMOVE ENGINE MOUNTING BRACKET FRONT

(a) Remove the 3 bolts and engine mounting bracket front.

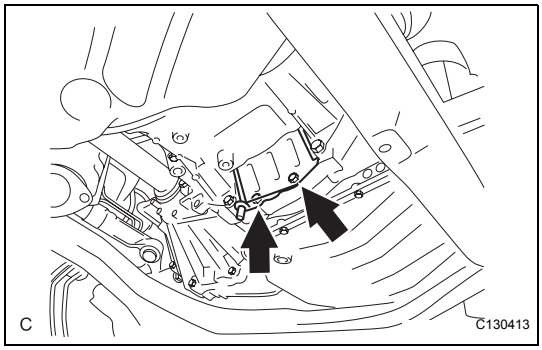

14. REMOVE AUTOMATIC TRANSAXLE ASSEMBLY

(a) Remove the 2 bolts.
(b) Remove the exhaust pipe support bracket and flywheel under cover from the automatic transaxle.

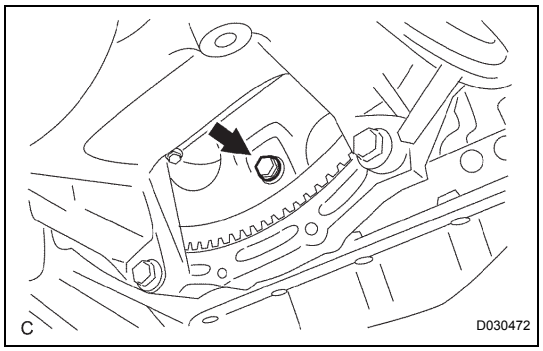

(c) Turn the crankshaft to gain access and remove the 6 bolts while holding the crankshaft pulley bolt with a wrench.
HINT:
There will be one green colored bolt.

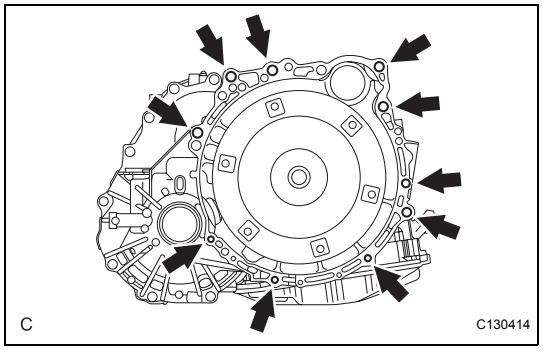

(d) Remove the 10 bolts.
(e) Separate and remove the automatic transaxle.

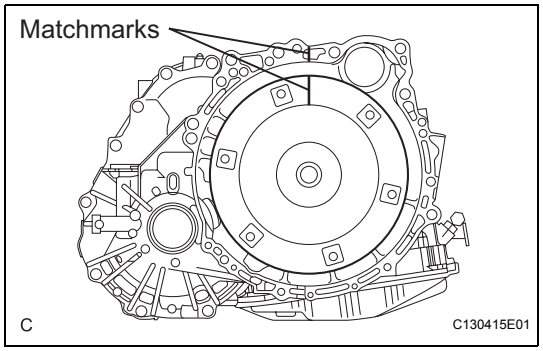

15. REMOVE TORQUE CONVERTER CLUTCH ASSEMBLY

(a) Put matchmarks on the transaxle case and torque converter clutch assembly.
(b) Remove the torque converter clutch assembly from the automatic transaxle assembly.

16. INSPECT TORQUE CONVERTER CLUTCH ASSEMBLY

HINT:
(See page AX-175)

INSTALLATION

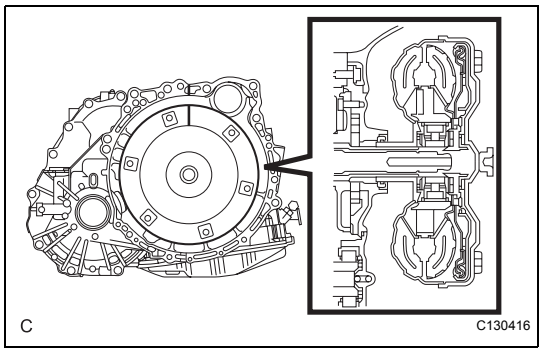

1. INSTALL TORQUE CONVERTER CLUTCH ASSEMBLY

(a) Aligning the matchmarks on the transmission case and torque converter clutch assembly, engage the splines of the input shaft and turbine runner.
NOTICE:
Do not push on the torque converter when aligning the matchmarks.

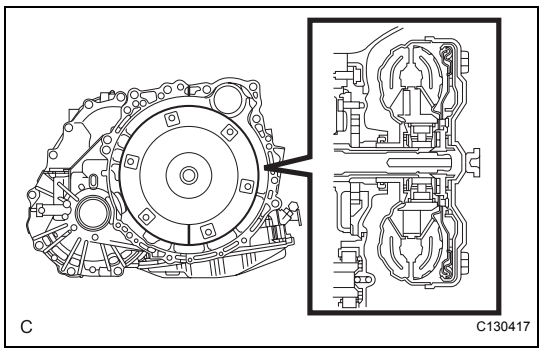

(b) Engage the splines of the stator shaft and stator while turning the torque converter clutch assembly.
HINT:
Turn the torque converter clutch assembly approximately 180°.

AX

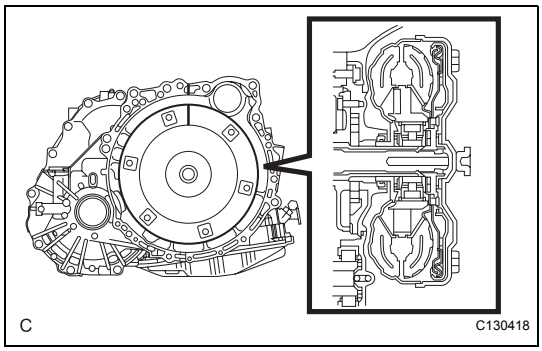

(c) Turn the torque converter clutch assembly and align the matchmarks on the torque converter clutch assembly and transmission case to engage the key of the oil pump drive gear into the slot on the torque converter clutch assembly.

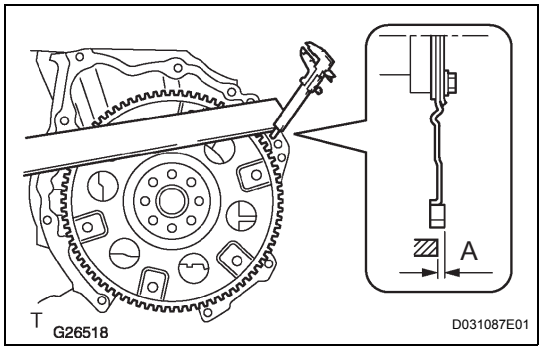

(d) Using vernier calipers and a straight edge, measure the dimension "A" between the transaxle fitting part of the engine and the converter fitting part of the drive plate (*1).

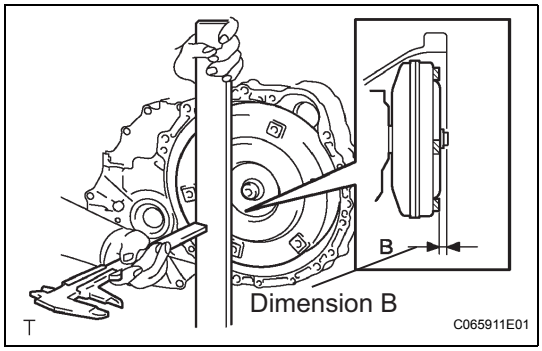

(e) Using vernier calipers and a straight edge, measure the dimension "B" shown in the illustration and check that "B" is greater than "A" (measured in step (*1)).

Standard:

A + 1 mm (0.03937 in.) or more

NOTICE:

Remember to minus the thickness of the straight edge.

AX

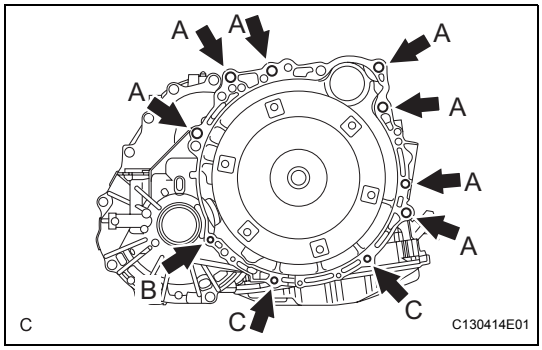

2. INSTALL AUTOMATIC TRANSAXLE ASSEMBLY

(a) Install the automatic transaxle to the engine with the 10 bolts.

Torque: Bolt A

64 N*m (650 kgf*cm, 47 ft.*lbf)

Bolt B

46 N*m (470 kgf*cm, 34 ft.*lbf)

Bolt C

43 N*m (438 kgf*cm, 32 ft.*lbf)

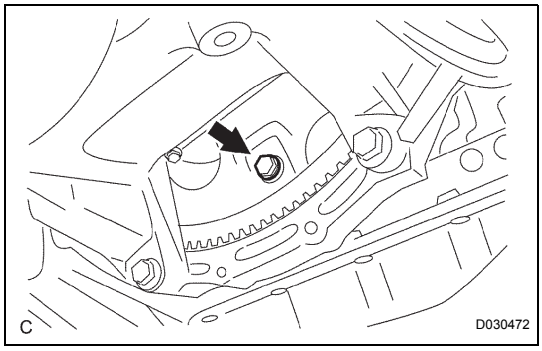

(b) Install the 6 torque converter clutch mounting bolts.

Torque: 41 N*m (418 kgf*cm, 30 ft.*lbf)

NOTICE:

First install the green colored bolt, and then the remaining 5 bolts.

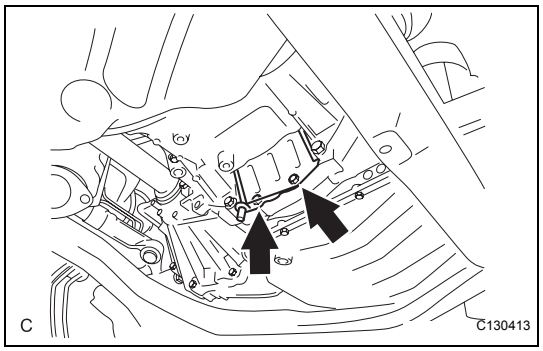

(c) Install the exhaust pipe support bracket and flywheel housing under cover to the automatic transaxle with the 2 bolts.
Torque: 7.8 N*m (80 kgf*cm, 69 in.*lbf)

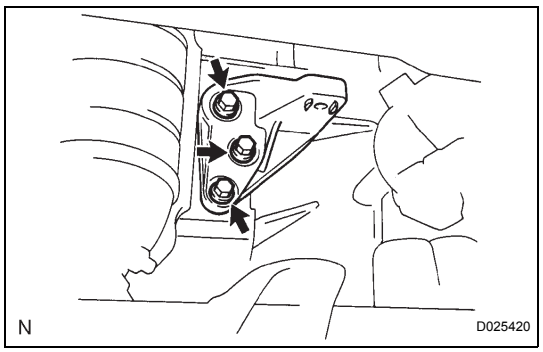

3. INSTALL ENGINE MOUNTING BRACKET FRONT

(a) Install the engine mounting bracket front to the automatic transaxle with the 3 bolts.
Torque: 64 N*m (653 kgf*cm, 47 ft.*lbf)

4. INSTALL OIL COOLER INLET TUBE NO.1

(a) Temporarily install the oil cooler outlet tube No.1.

(b) Temporarily install the oil cooler inlet tube No.1.

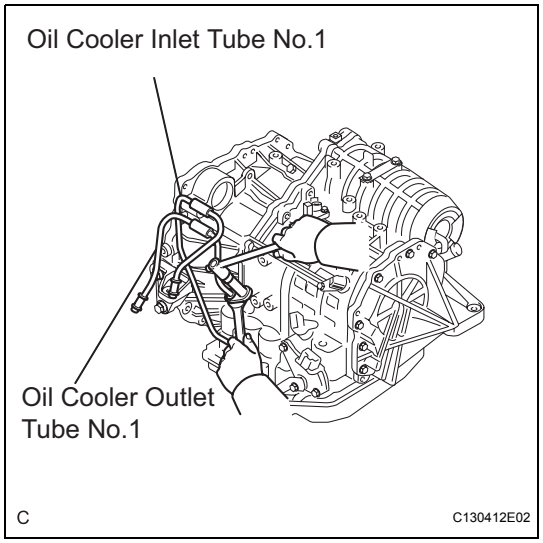

(c) Using SST and a wrench, tighten the oil cooler inlet tube No.1.
SST 09023-12701
Torque: 34 N*m (347 kgf*cm, 25 ft.*lbf)

5. INSTALL OIL COOLER OUTLET TUBE NO.1

(a) Using SST and a wrench, tighten the oil cooler outlet tube No.1.
SST 09023-12701
Torque: 34 N*m (347 kgf*cm, 25 ft.*lbf)

AX

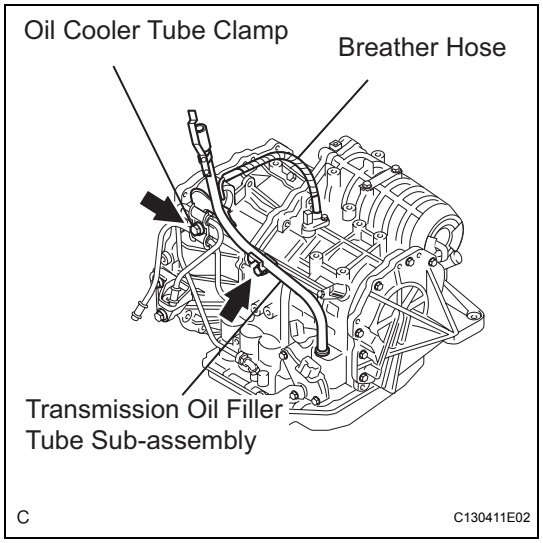

6. INSTALL TRANSMISSION OIL FILLER TUBE SUB-ASSEMBLY

(a) Coat a new O-ring with ATF, and install it to the oil filler tube.

(b) Install the oil filler tube to the automatic transaxle with the bolt.
Torque: 5.5 N*m (56 kgf*cm, 49 in.*lbf)

(c) Install the oil cooler tube clamp with the bolt.
Torque: 5.5 N*m (56 kgf*cm, 49 in.*lbf)

(d) Connect the breather hose to the oil filter tube.

(e) Install the ATF level gauge.

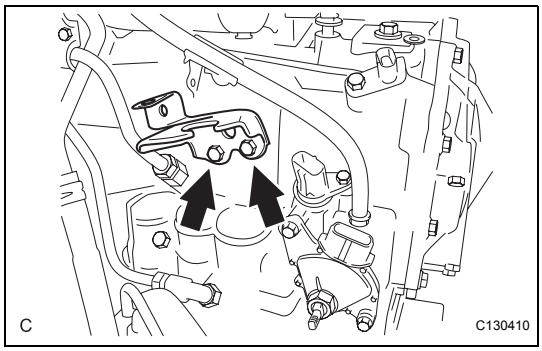

7. INSTALL TRANSMISSION CONTROL CABLE BRACKET NO.1

(a) Install the control cable bracket No.1 with the 2 bolts.
Torque: 12 N*m (122 kgf*cm, 9 ft.*lbf)

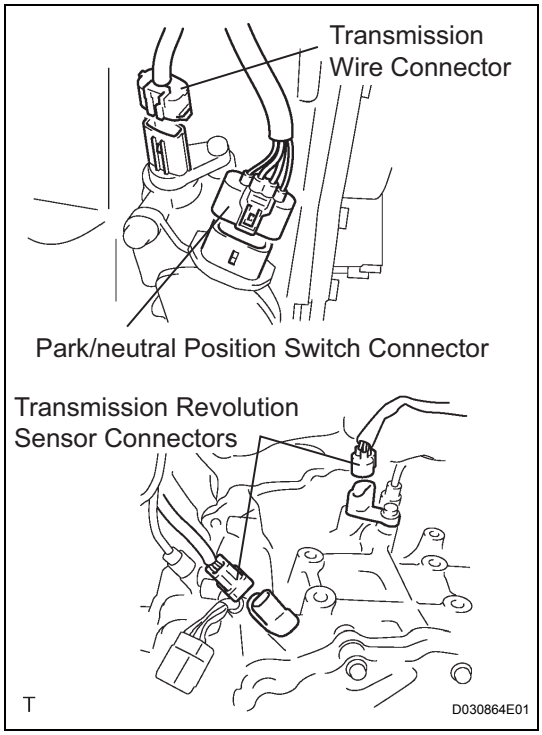

8. CONNECT CONNECTORS

(a) Connect the transmission wire connector.
(b) Connect the park/neutral position switch connector.
(c) Connect the 2 transmission revolution sensor connectors.

AX

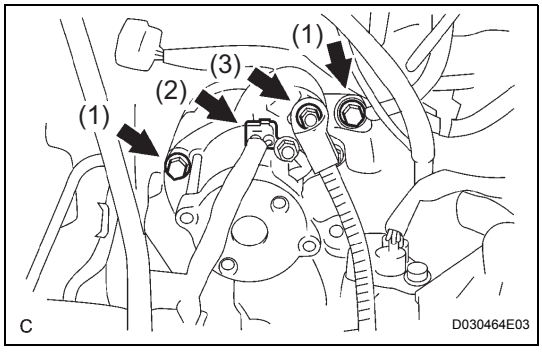

9. INSTALL STARTER ASSEMBLY

(a) Install the starter assembly with the 2 bolts (1).
Torque: 37 N*m (377 kgf*cm, 27 ft.*lbf)
(b) Connect the connector (2).
(c) Connect the starter wire with the nut (3).
Torque: 9.8 N*m (100 kgf*cm, 87 in.*lbf)

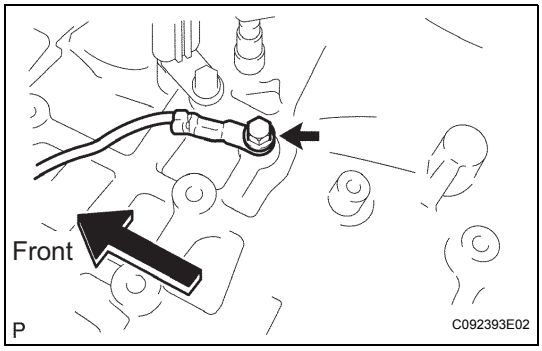

10. CONNECT WIRE HARNESS

(a) Connect the wire harness with the bolt.
Torque: 13 N*m (133 kgf*cm, 10 ft.*lbf)

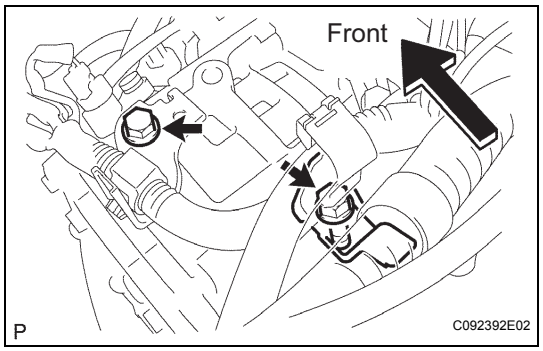

11. INSTALL WIRE HARNESS CLAMP

(a) Install the 4 clamps and 4 bolts.
Torque: 8.4 N*m (86 kgf*cm, 74 in.*lbf)

(b) Connect the wire harnesses to the clamps.

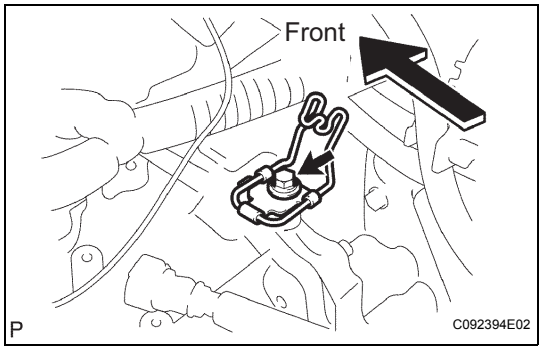

12. INSTALL TRANSMISSION CONTROL CABLE BRACKET NO.2

(a) Install the transmission control cable bracket No.2 with the bolt.
Torque: 12 N*m (122 kgf*cm, 9 ft.*lbf)

13. INSTALL LH FRONT DRIVE SHAFT ASSEMBLY

HINT:
(See page DS-13)

14. INSTALL RH FRONT DRIVE SHAFT ASSEMBLY

HINT:
(See page DS-13)

15. INSTALL ENGINE ASSEMBLY WITH TRANSAXLE

HINT:
(See page EM-37)

16. RESET MEMORY

HINT:
(See page AX-1)

17. PERFORM INITIALIZATION

HINT:
Some system need initialization when disconnecting the cable from the negative battery terminal (See page AX-1).

AX

SHIFT LEVER

COMPONENTS

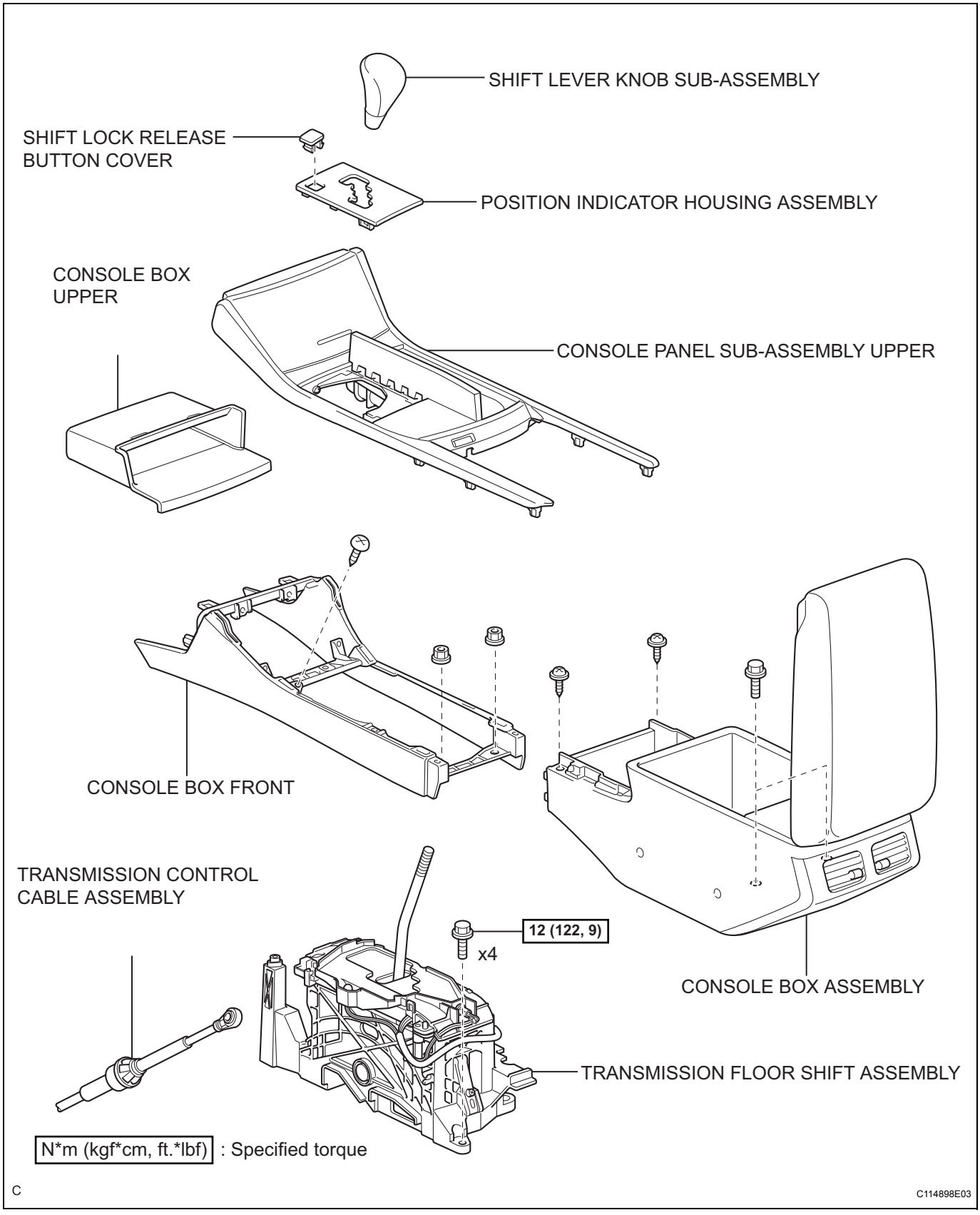

AX

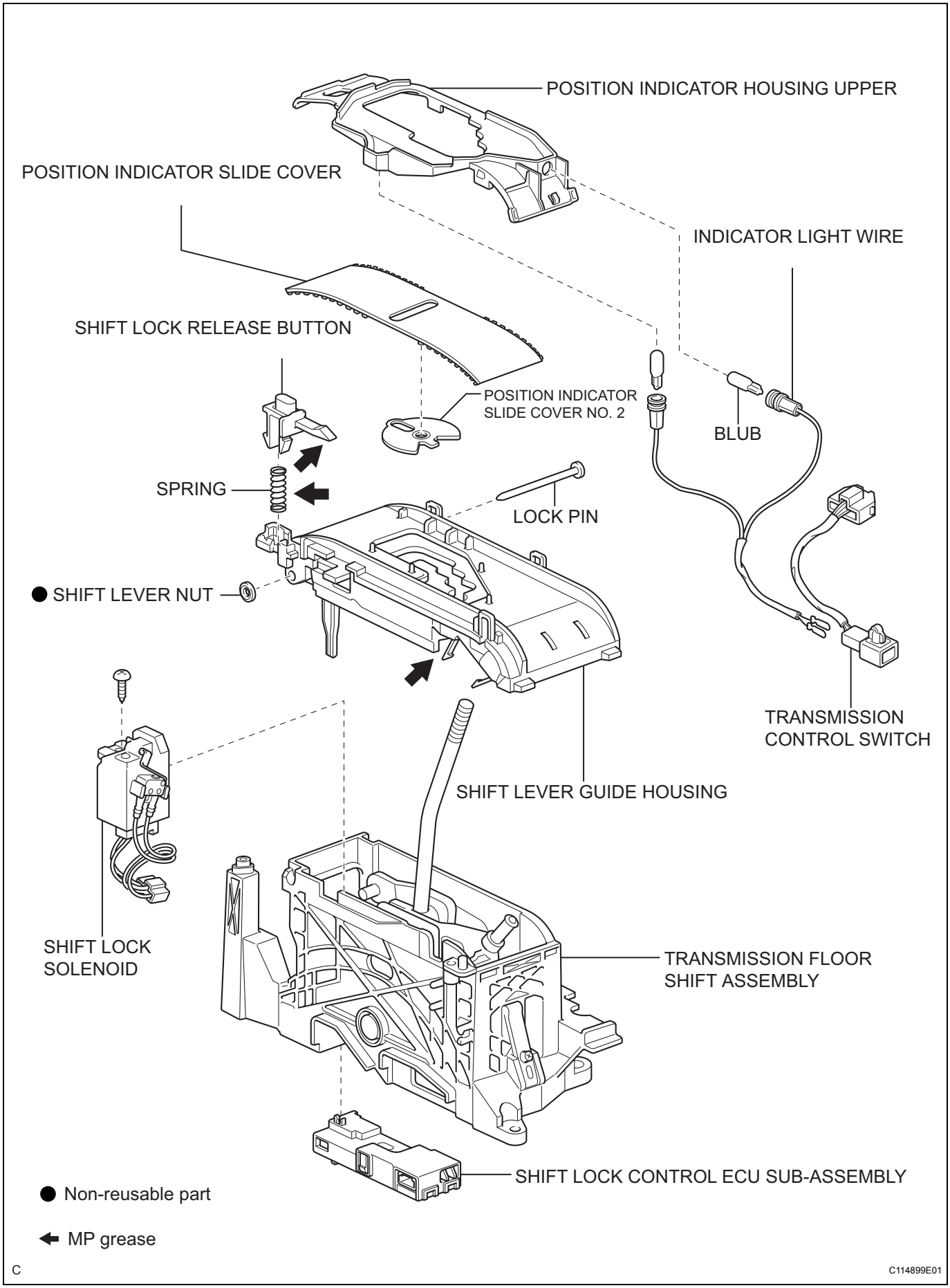
POSITION INDICATOR HOUSING UPPER
POSITION INDICATOR SLIDE COVER
INDICATOR LIGHT WIRE
SHIFT LOCK RELEASE BUTTON
POSITION INDICATOR SLIDE COVER NO. 2
BLUB
SPRING
LOCK PIN
● SHIFT LEVER NUT
TRANSMISSION CONTROL SWITCH
SHIFT LEVER GUIDE HOUSING
SHIFT LOCK SOLENOID
TRANSMISSION FLOOR SHIFT ASSEMBLY
SHIFT LOCK CONTROL ECU SUB-ASSEMBLY
● Non-reusable part
MP grease
C
C114899E01

AX

REMOVAL

1. **DISCONNECT CABLE FROM NEGATIVE BATTERY TERMINAL**

2. **REMOVE SHIFT LEVER KNOB SUB-ASSEMBLY**
   (a) Remove the shift lever knob sub-assembly.

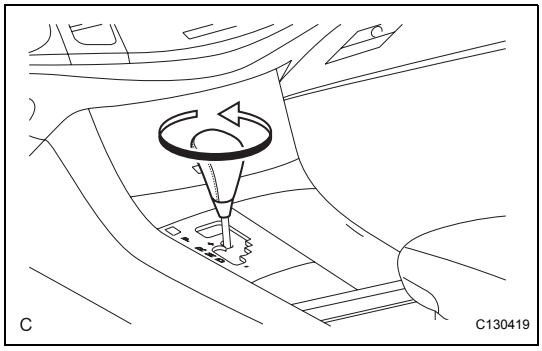

3. **REMOVE POSITION INDICATOR HOUSING ASSEMBLY**
   (a) Remove the position indicator housing assembly.

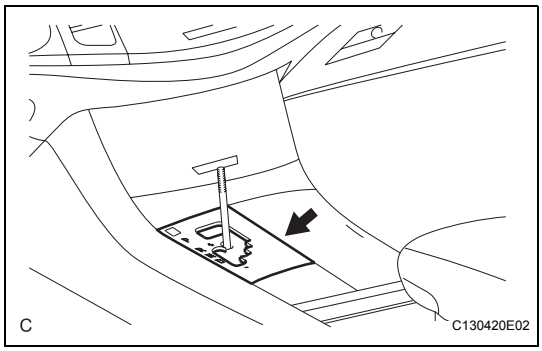

4. **REMOVE SHIFT LOCK RELEASE BUTTON COVER**
   (a) Using a screwdriver, remove the shift lock release button cover from the position indicator housing assembly.

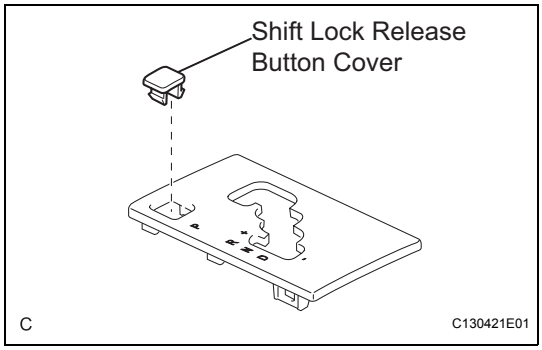

5. **REMOVE CONSOLE BOX UPPER**
   HINT:
   (See page IP-13)

6. **REMOVE CONSOLE PANEL SUB-ASSEMBLY UPPER**
   HINT:
   (See page IP-13)

7. **REMOVE CONSOLE BOX ASSEMBLY**
   HINT:
   (See page IP-13)

8. **REMOVE CONSOLE BOX FRONT**
   HINT:
   (See page IP-14)

9. **REMOVE TRANSMISSION CONTROL CABLE ASSEMBLY**
   (a) Disconnect the transmission control cable assembly from the transmission floor shift assembly.

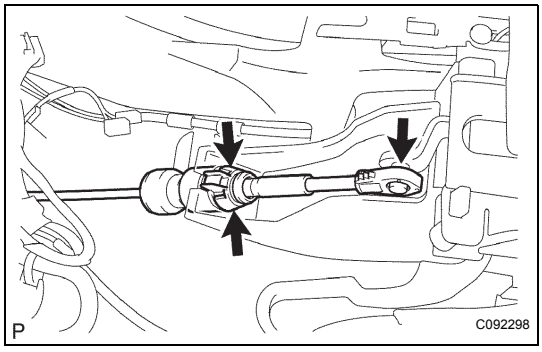

AX

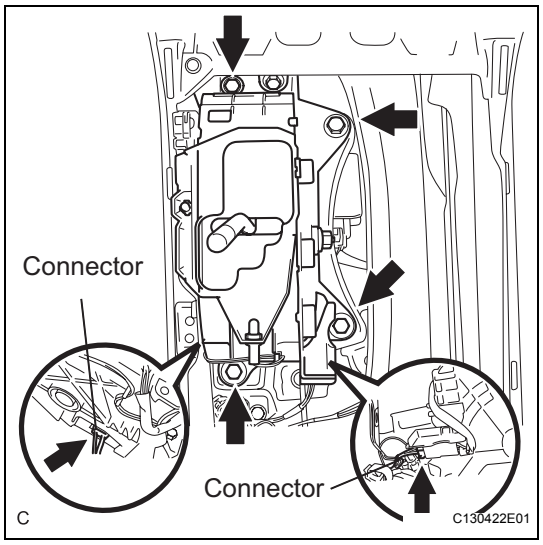

10. REMOVE TRANSMISSION FLOOR SHIFT ASSEMBLY

(a) Disconnect the 2 connectors and clamp.

(b) Remove the 4 bolts and floor shift assembly.

DISASSEMBLY

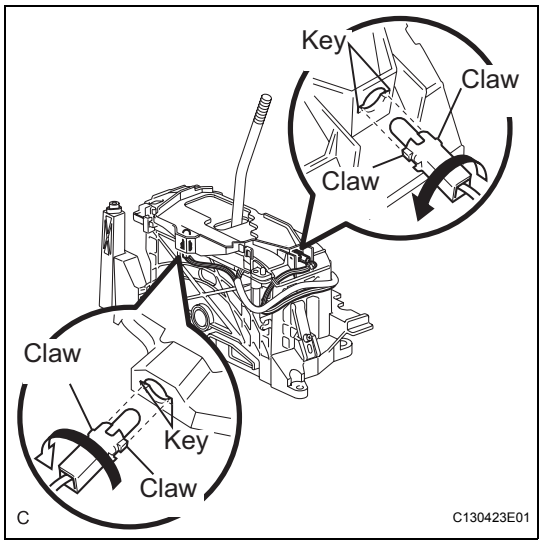

1. REMOVE INDICATOR LIGHT WIRE

(a) Remove the indicator light wire from the floor shift assembly as shown in the illustration.

(b) Remove the position indicator bulb from the indicator light wire.

(c) Remove the position indicator bulb cap from the position indicator bulb.

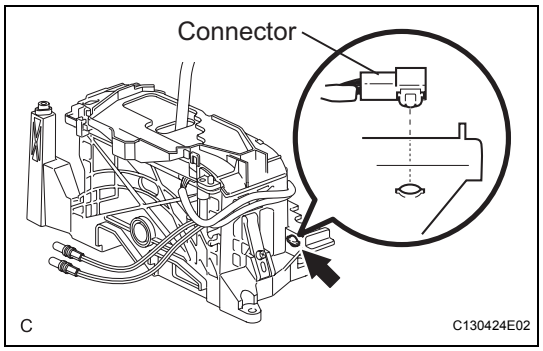

(d) Separate the transmission control switch connector.

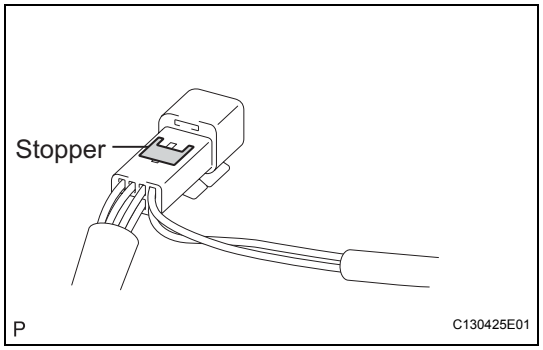

(e) Using a screwdriver, release the stopper.

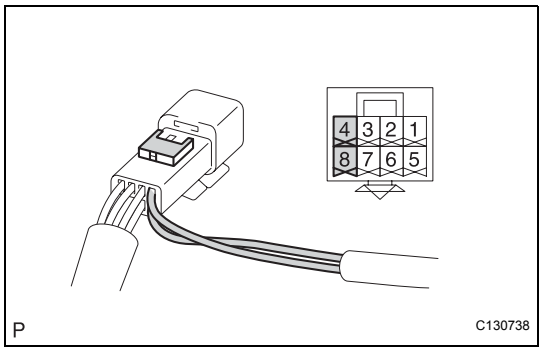

(f) Using a screwdriver, disengage the locking lug of terminal (4) and (8), and pull the terminals out from the rear.

2. REMOVE POSITION INDICATOR SLIDE COVER

(a) Using a screwdriver, remove the position indicator housing upper.

NOTICE:

Be careful not to damage the position indicator housing upper.

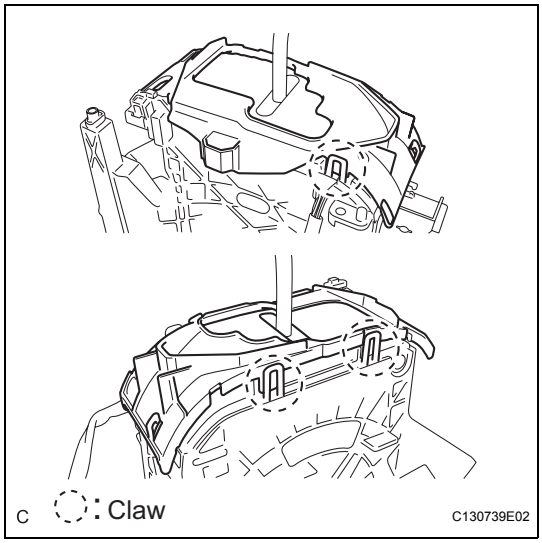

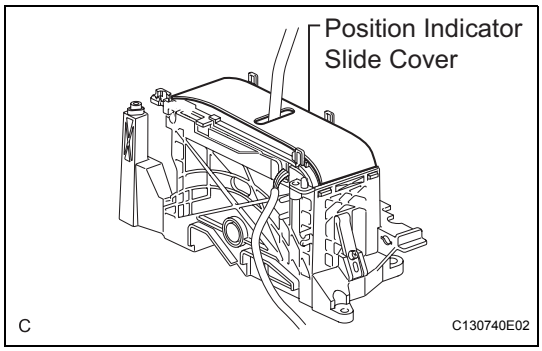

(b) Remove the position indicator slide cover from the shift lever guide housing.

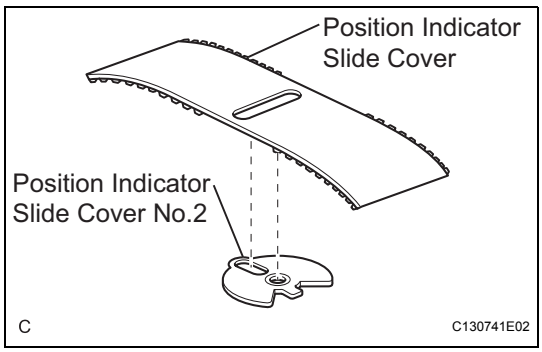

(c) Remove the position indicator slide cover No. 2.

AX

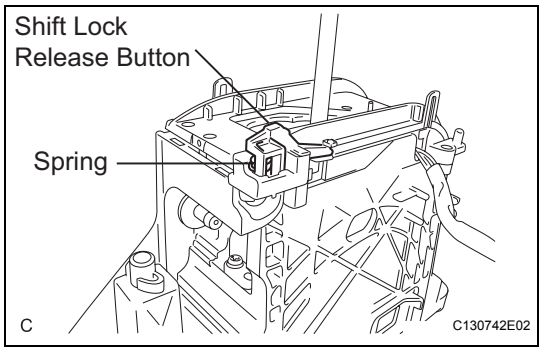

3. REMOVE SHIFT LOCK RELEASE BUTTON

(a) Remove the shift lock release button and spring from the floor shift assembly.

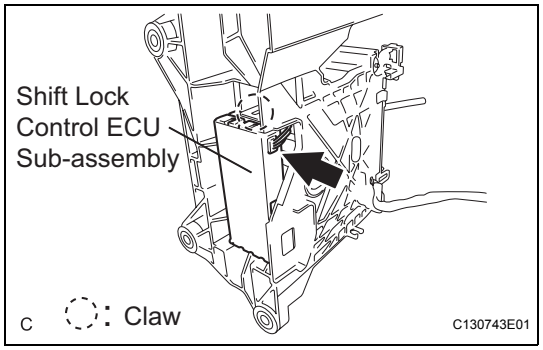

4. REMOVE SHIFT LOCK CONTROL ECU SUB-ASSEMBLY

(a) Disconnect the connector.

(b) Using a screwdriver, remove the shift lock control ECU sub-assembly.

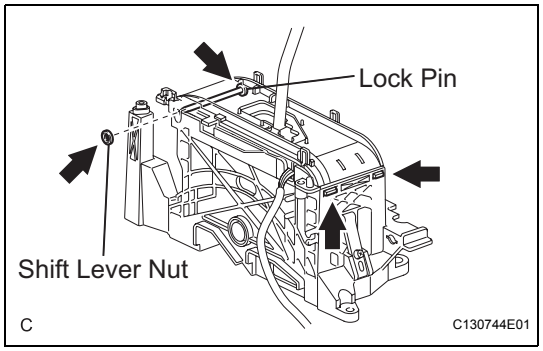

5. REMOVE SHIFT LOCK SOLENOID

(a) Remove the shift lever nut and lock pin from the floor shift assembly.

(b) Remove the shift lever guide housing from the floor shift assembly.

NOTICE:

First remove the shift lever nut and lock pin, then disengage the 2 claws.

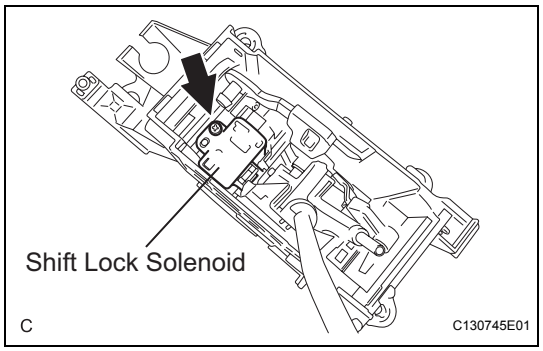

(c) Remove the screw and shift lock solenoid.

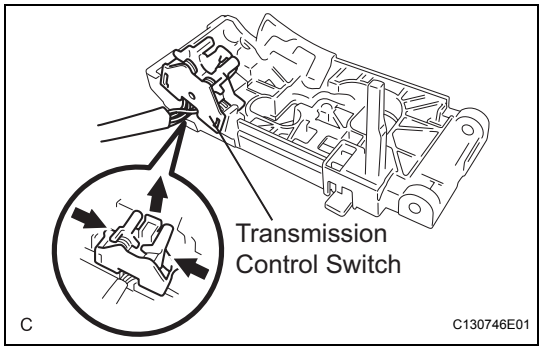

6. REMOVE TRANSMISSION CONTROL SWITCH

(a) Remove the transmission control switch from the shift lever guide housing.

AX

ADJUSTMENT

1. INSPECT SHIFT LEVER POSITION

(a) When shifting from the P to R position only with the ignition switch on and brake pedal depressed, make sure that the shift lever moves smoothly and can be moderately operated.

(b) Start the engine and make sure that the vehicle moves forward when shifting from the N to D position and moves rearward when shifting to the R position.

2. ADJUST SHIFT LEVER POSITION

(a) Loosen the nut on the control shaft lever.

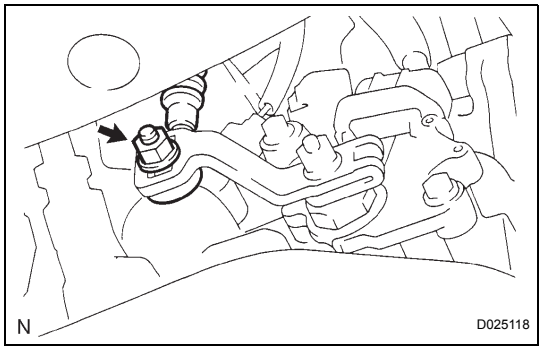

(b) Push the control shaft fully downward.

(c) Return the control shaft lever 2 notches to the N position.

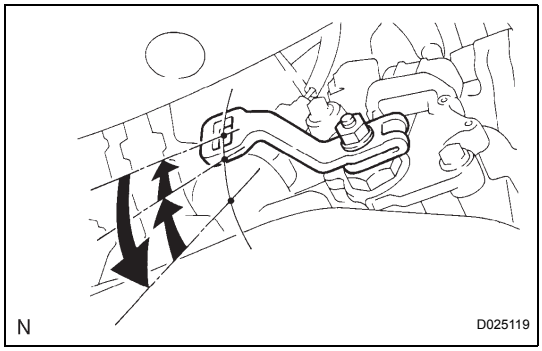

AX

(d) While pushing the control cable end up with the shift lever in the N position, install it to the control shaft lever with the nut.

Torque: 15 N*m (150 kgf*cm, 10 ft.*lbf)

NOTICE:

- **If the control cable end is excessively pushed up, the shift lever can not be adjusted.**
- **When tightening the nut, confirm that the control cable is properly stretched.**

(e) Start the engine and make sure that the vehicle moves forward when shifting the lever from the N to D position and moves rearward when shifting it to the R position.

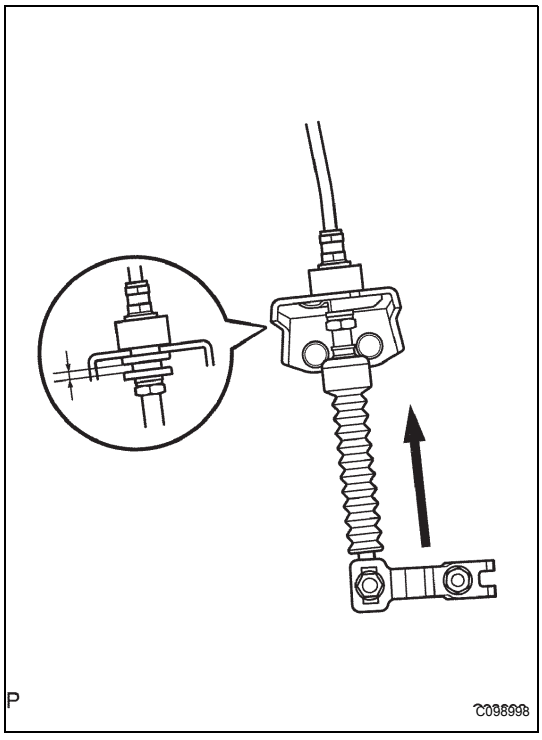

REASSEMBLY

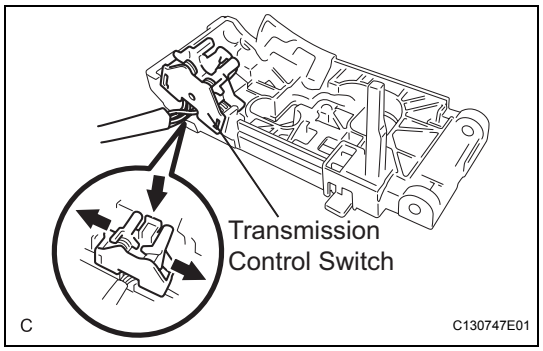

1. INSTALL TRANSMISSION CONTROL SWITCH

(a) Install the transmission control switch to the shift lever guide housing.
HINT:
Securely engage the claws.

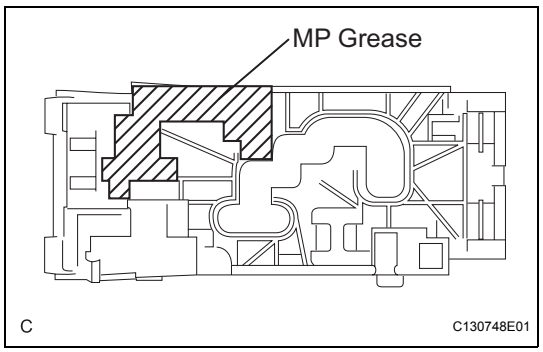

2. INSTALL SHIFT LOCK SOLENOID

(a) Apply MP grease to the hatched area of the shift lever guide housing as indicated in the illustration.

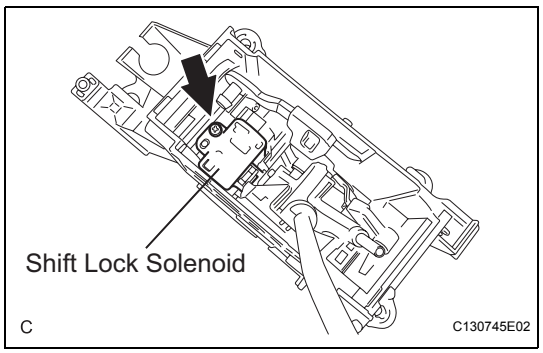

(b) Install the shift lock solenoid with the screw.

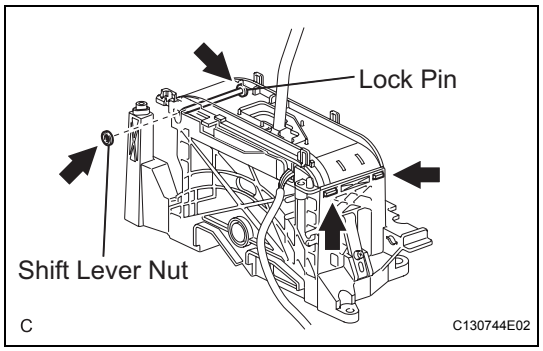

(c) Install the shift lever guide housing with the lock pin and a new shift lever nut.
NOTICE:
- **Install the shift lever nut and lock pin after engaging the 2 claws.**
- **Securely engage the claws.**

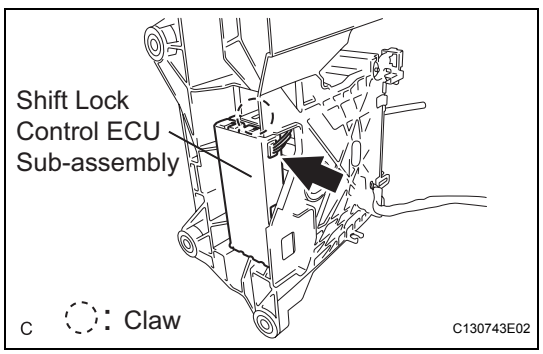

3. INSTALL SHIFT LOCK CONTROL ECU SUB-ASSEMBLY

(a) Install the shift lock control ECU sub-assembly.
(b) Connect the connector to the shift lock control ECU sub-assembly.

AX

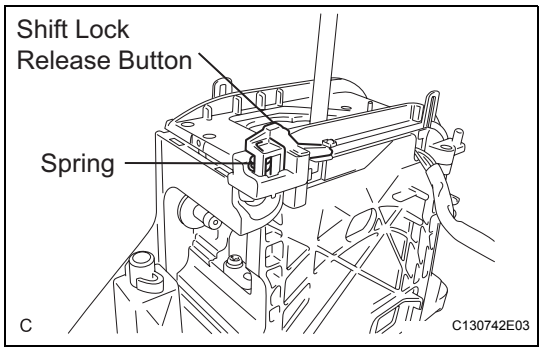

4. INSTALL SHIFT LOCK RELEASE BUTTON

(a) Apply MP grease to the shift lock release button and spring in the illustration.

(b) Install the shift lock release button and spring to the floor shift assembly.
HINT:
Securely engage the claws.

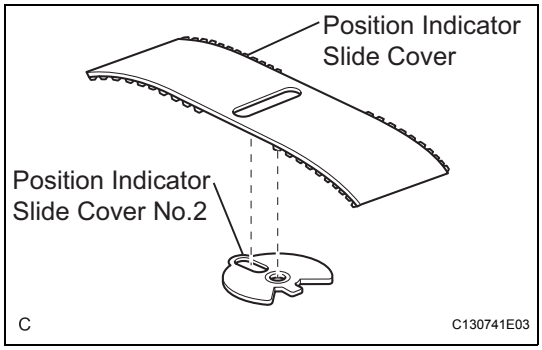

5. INSTALL POSITION INDICATOR SLIDE COVER

(a) Install position indicator slide cover No. 2 to the position indicator slide cover.

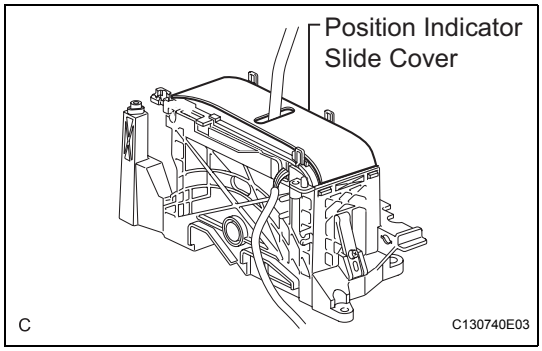

(b) Install the position indicator slide cover to the shift lever guide housing.

AX

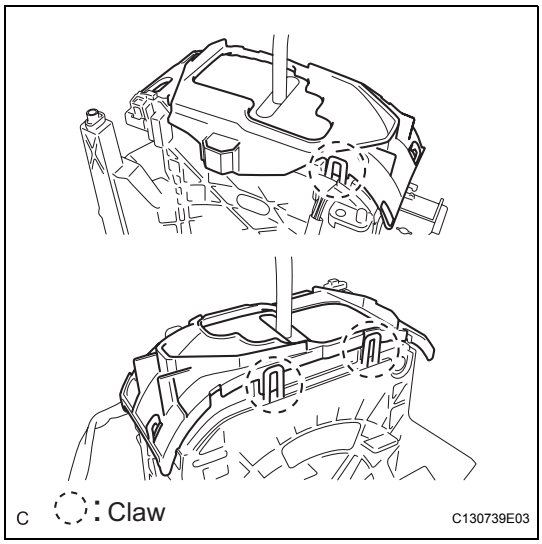

(c) Install the position indicator housing upper to the shift lever guide housing.
HINT:
Securely engage the claws.

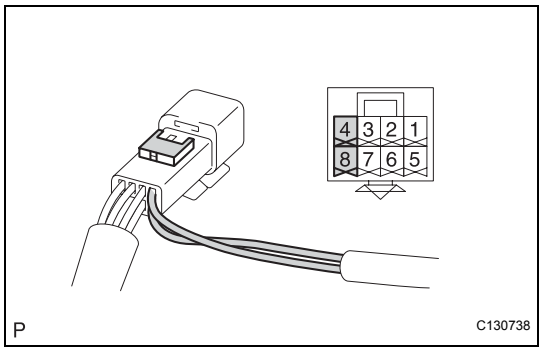

6. INSTALL INDICATOR LIGHT WIRE

(a) Securely connect the 2 terminals of the indicator light wire harness to the transmission control switch connector.

(b) Install the position indicator light bulb to the indicator light wire.

(c) Install the position indicator bulb cap to the position indicator light bulb.

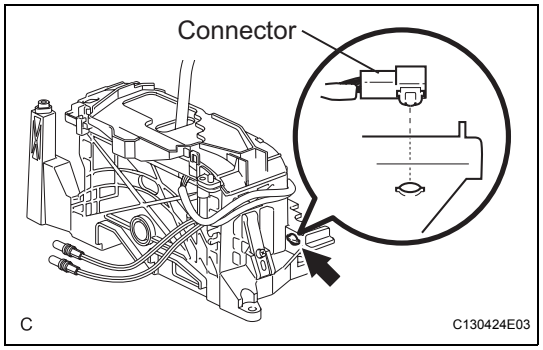

(d) Install the transmission control switch connector.

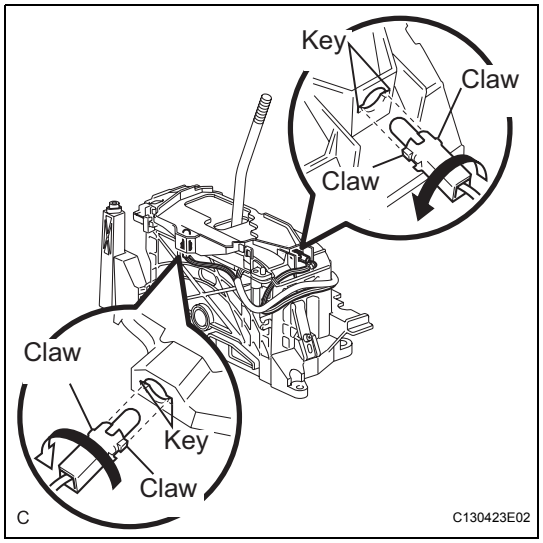

(e) Install the indicator light wire to the position indicator housing upper.

NOTICE:
Make sure that the indicator light wire is securely installed to the position indicator housing upper.

AX

INSTALLATION

1. INSTALL TRANSMISSION FLOOR SHIFT ASSEMBLY

(a) Install the floor shift assembly with the 4 bolts.
Torque: 12 N*m (122 kgf*cm, 9 ft.*lbf)

(b) Connect the 2 connectors and clamp to the floor shift assembly.

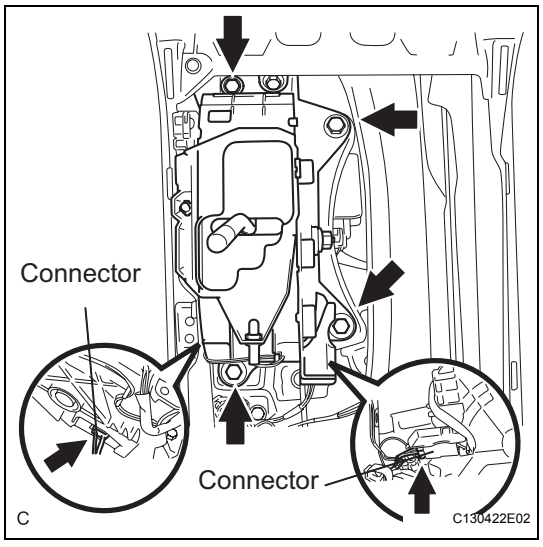

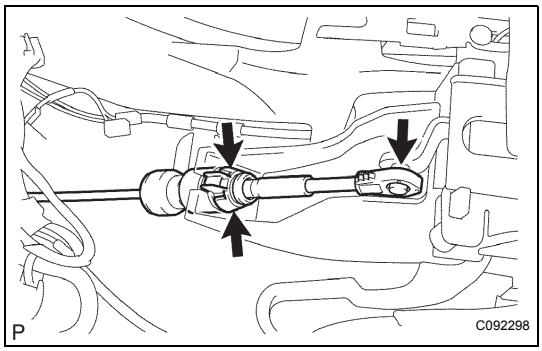

2. **INSTALL TRANSMISSION CONTROL CABLE ASSEMBLY**
   (a) Connect the transmission control cable assembly to the transmission floor shift assembly.
   HINT:
   - Install it with the uneven surface facing up.
   - Securely engage the claws.

3. **INSTALL CONSOLE BOX FRONT**
   HINT:
   (See page IP-17)

4. **INSTALL CONSOLE BOX ASSEMBLY**
   HINT:
   (See page IP-17)

5. **INSTALL CONSOLE PANEL SUB-ASSEMBLY UPPER**
   HINT:
   (See page IP-17)

6. **INSTALL CONSOLE BOX UPPER**
   HINT:
   (See page IP-17)

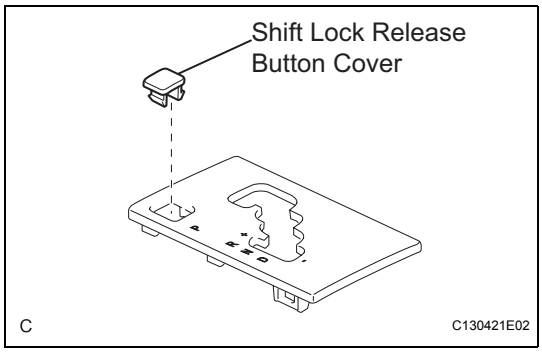

7. **INSTALL SHIFT LOCK RELEASE BUTTON COVER**
   (a) Install the shift lock release button cover to the position indicator housing assembly.

AX

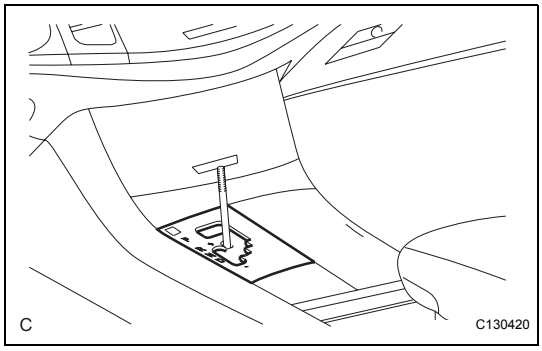

8. **INSTALL POSITION INDICATOR HOUSING ASSEMBLY**
   (a) Install the position indicator housing.

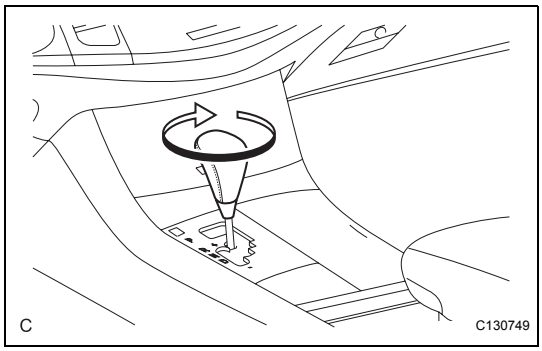

9. **INSTALL SHIFT LEVER KNOB SUB-ASSEMBLY**
   (a) Install the shift lever knob sub-assembly to the floor shift lever assembly.

10. **CONNECT CABLE TO NEGATIVE BATTERY TERMINAL**

11. **INSPECT SHIFT LEVER POSITION (See page AX-169)**

12. **ADJUST SHIFT LEVER POSITION (See page AX-170)**

13. **PERFORM INITIALIZATION**
    HINT:
    (See page AX-1)

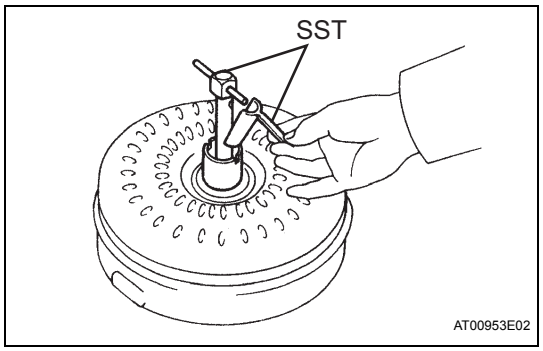

TORQUE CONVERTER CLUTCH AND DRIVE PLATE

INSPECTION

1. INSPECT TORQUE CONVERTER CLUTCH ASSEMBLY

(a) Inspect the one-way clutch.

(1) Set SST into the inner race of the one-way clutch.

SST 09350-32014 (09351-32010)

(2) Install SST so that it fits in the notch of the converter hub and outer race of the one-way clutch.

SST 09350-32014 (09351-32010, 09351-32020)

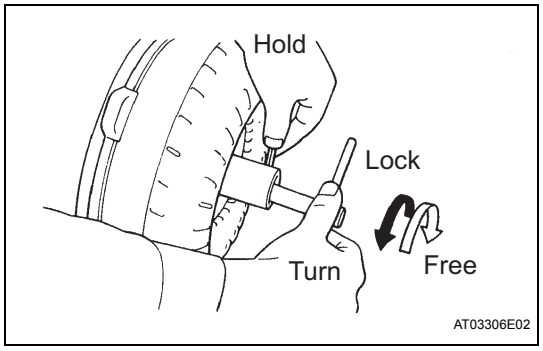

(3) Stand the torque converter up and turn the SST.

Standard:

If the one-way clutch is turned clockwise, it rotates freely and if turned counterclockwise, it locks.

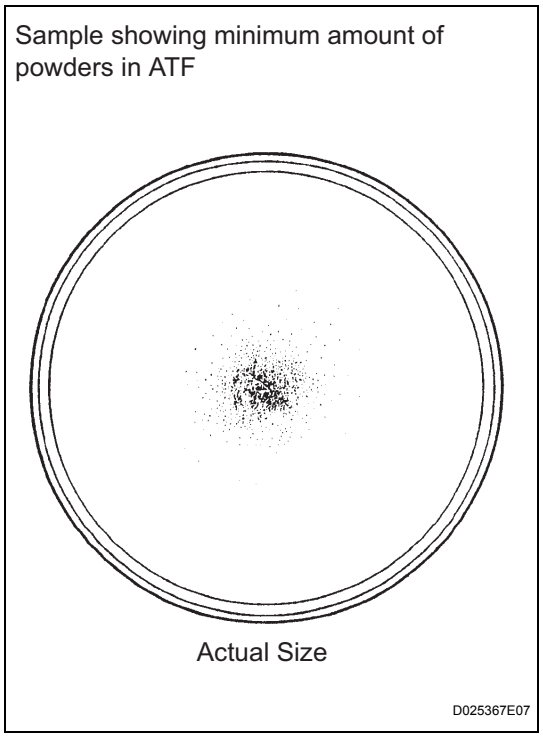

(b) Determine the condition of the torque converter clutch assembly.

(1) If the inspection result of the torque converter clutch assembly satisfies the following conditions, replace the torque converter clutch assembly.

Malfunction item:

A metallic sound is emitted from the torque converter clutch assembly during the stall test or when the shift lever is moved to the N position.

The one-way clutch is free or locked in both directions.

The amount of powder in the ATF is greater than the sample shown on the illustration (see the sample).

HINT:

The sample shows the auto fluid of approximately 0.25 liters (0.26 US qts, 0.22 Imp. qts) that is taken out from the removed torque converter clutch.

(c) Exchange the ATF in the torque converter clutch.

(1) If the ATF is discolored and/or has a foul odor, completely stir the ATF in the torque converter clutch and drain it with the torque converter facing up.

AX

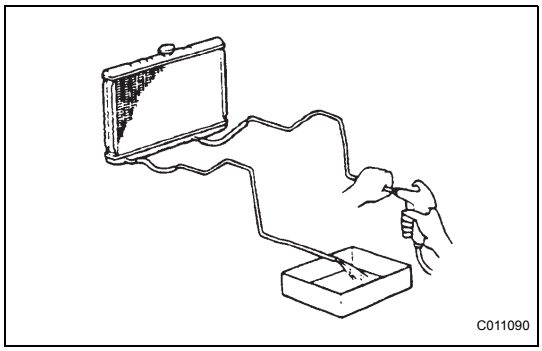

(d) Clean and check the oil cooler and oil pipe line.
  (1) If the torque converter clutch is inspected or the ATF is exchanged, clean the oil cooler and oil pipe line.
  HINT:
  - Spray compressed air of 196 kPa (2 kgf/cm 2, 28 psi) from the inlet hose.
  - If plenty of fine powders are identified in the ATF, add new ATF using a bucket pump and clean it again.
  (2) If the ATF is cloudy, inspect the oil cooler (radiator).

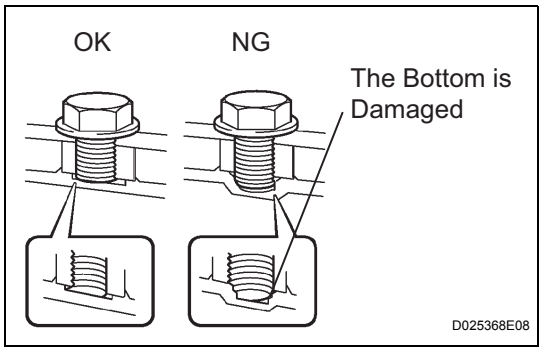

(e) Prevent deformation of the torque converter clutch and damage to the oil pump gear.
  (1) When there is any damage on the end of the bolt for the torque converter clutch and on the bottom of the bolt hole, replace the bolt and the torque converter clutch.
  (2) All of the bolts must be same length.
  (3) Bolts with washers must be used.

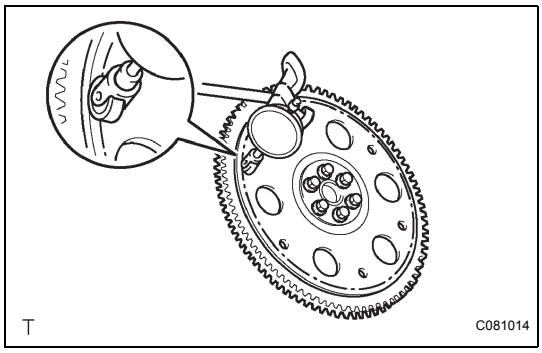

2. INSPECT DRIVE PLATE & RING GEAR SUB-ASSEMBLY

(a) Set up a dial indicator with a roller instrument and measure the drive plate runout.

(b) Check for damage of the ring gear.

Maximum runout:

0.20 mm (0.0079 in.)

If runout is not within specification or ring gear is damaged, replace the drive plate.

AUTOMATIC TRANSAXLE UNIT

COMPONENTS

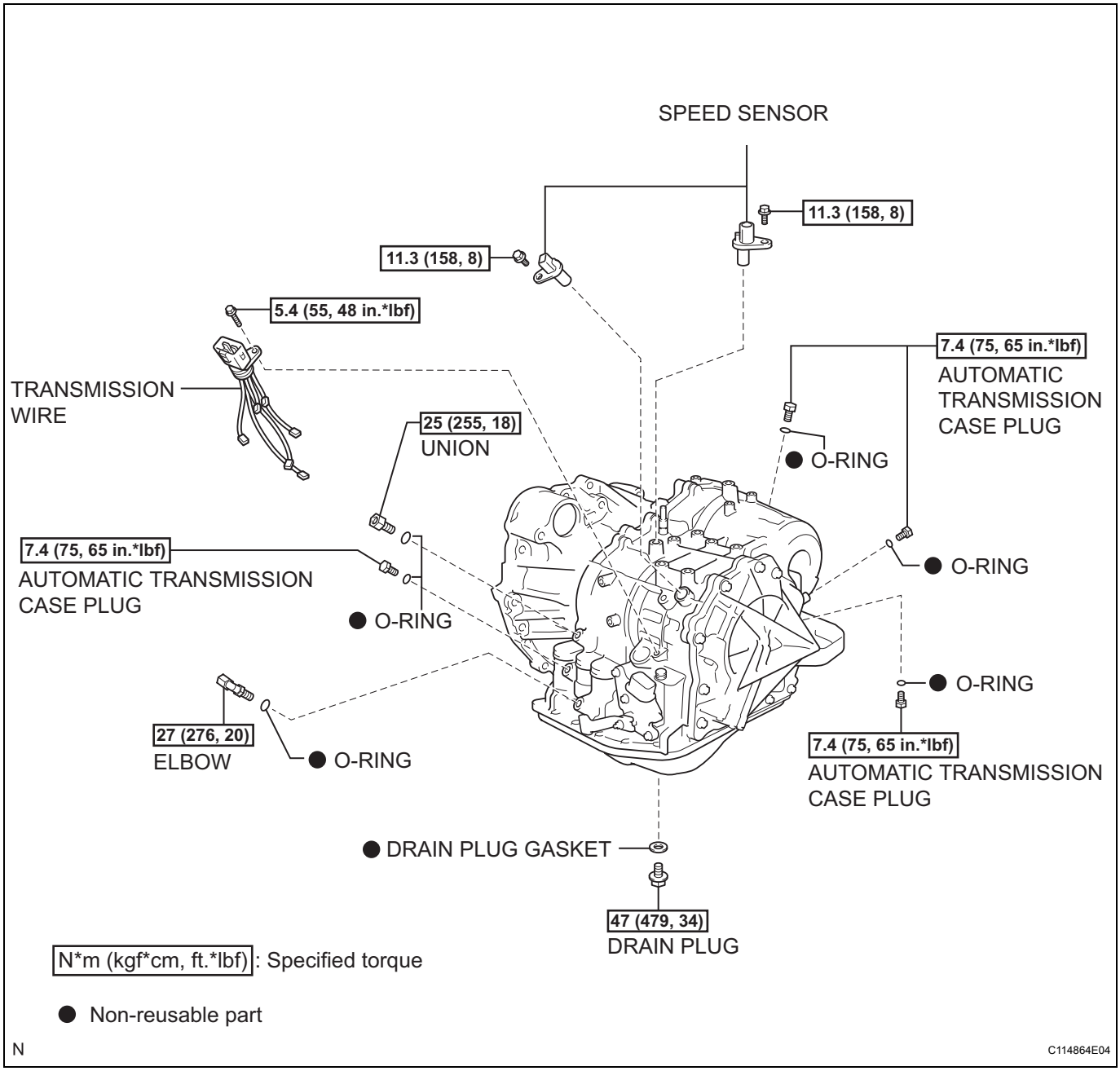

AX

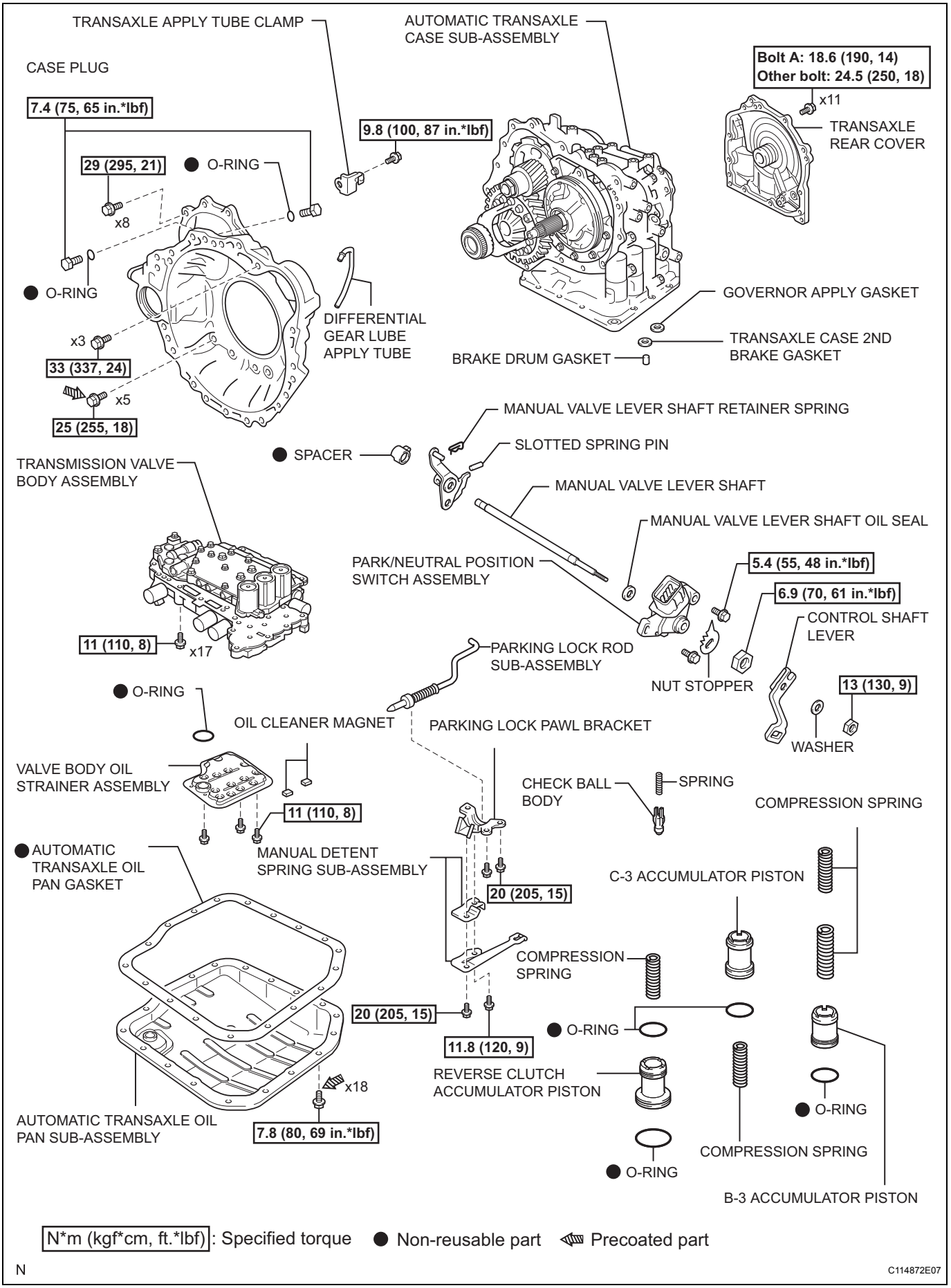

N*m (kgf*cm, ft.*lbf): Specified torque ● Non-reusable part Precoated part

N

C114872E07

AX

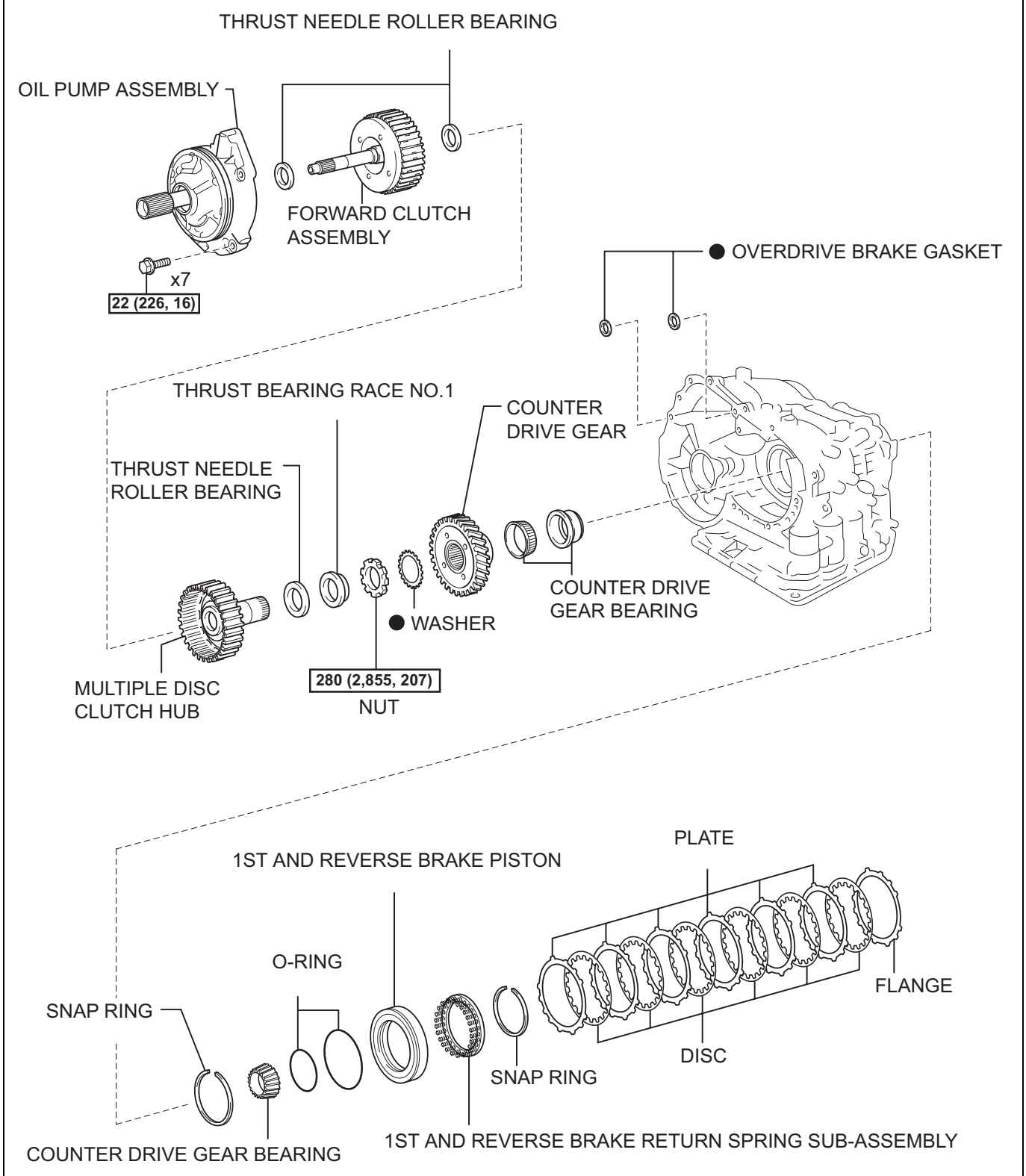

N*m (kgf*cm, ft.*lbf): Specified torque ● Non-reusable part

N

C114873E04

AX

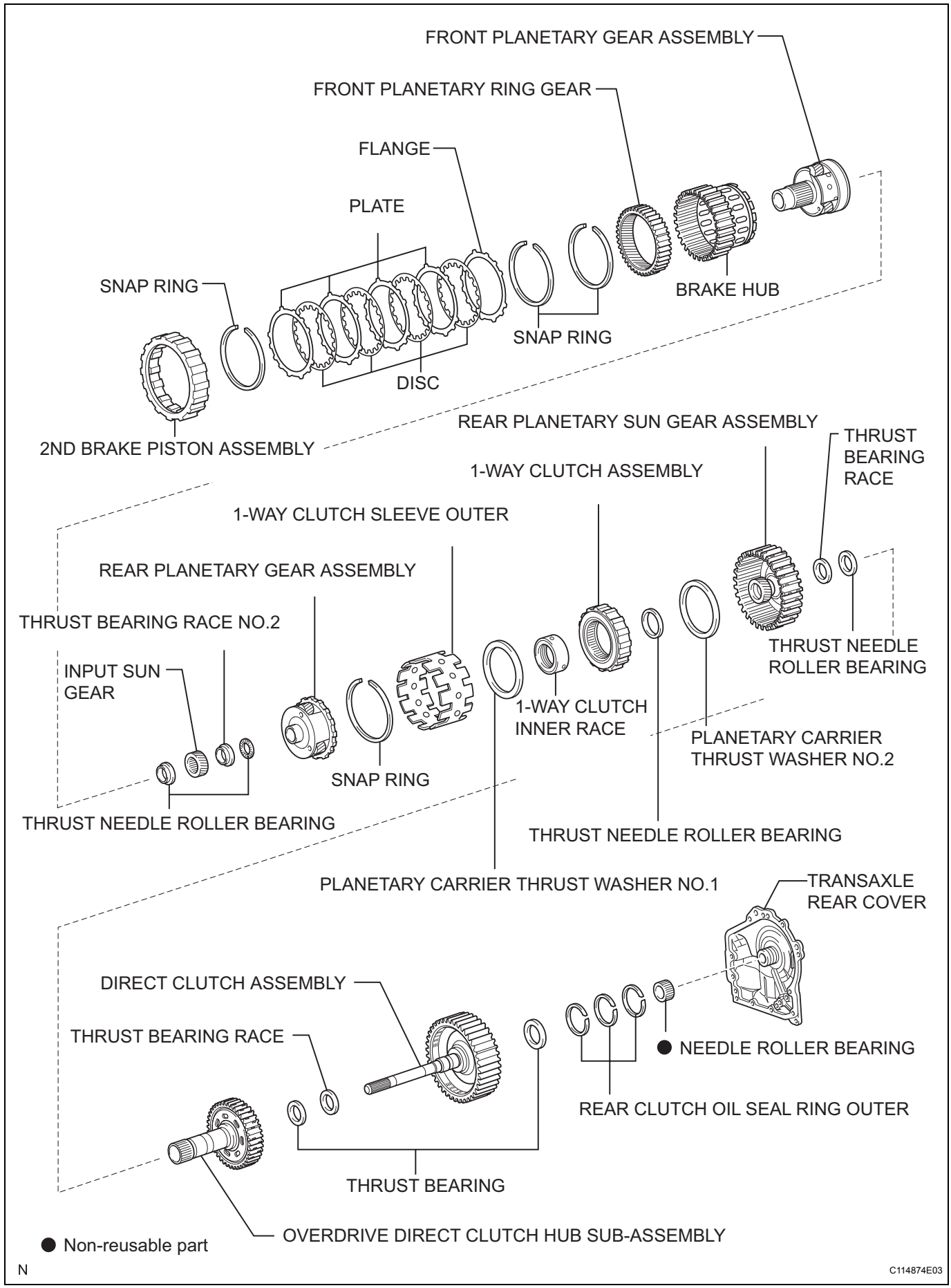
FRONT PLANETARY GEAR ASSEMBLY
FRONT PLANETARY RING GEAR
FLANGE
PLATE
SNAP RING
BRAKE HUB
SNAP RING
DISC
2ND BRAKE PISTON ASSEMBLY
REAR PLANETARY SUN GEAR ASSEMBLY
THRUST BEARING RACE
1-WAY CLUTCH ASSEMBLY
1-WAY CLUTCH SLEEVE OUTER
REAR PLANETARY GEAR ASSEMBLY
THRUST BEARING RACE NO.2
THRUST NEEDLE ROLLER BEARING
INPUT SUN GEAR
1-WAY CLUTCH INNER RACE
PLANETARY CARRIER THRUST WASHER NO.2
SNAP RING
THRUST NEEDLE ROLLER BEARING
THRUST NEEDLE ROLLER BEARING
PLANETARY CARRIER THRUST WASHER NO.1
TRANSAXLE REAR COVER
DIRECT CLUTCH ASSEMBLY
THRUST BEARING RACE
● NEEDLE ROLLER BEARING
REAR CLUTCH OIL SEAL RING OUTER
THRUST BEARING
OVERDRIVE DIRECT CLUTCH HUB SUB-ASSEMBLY
● Non-reusable part
N
C114874E03

AX

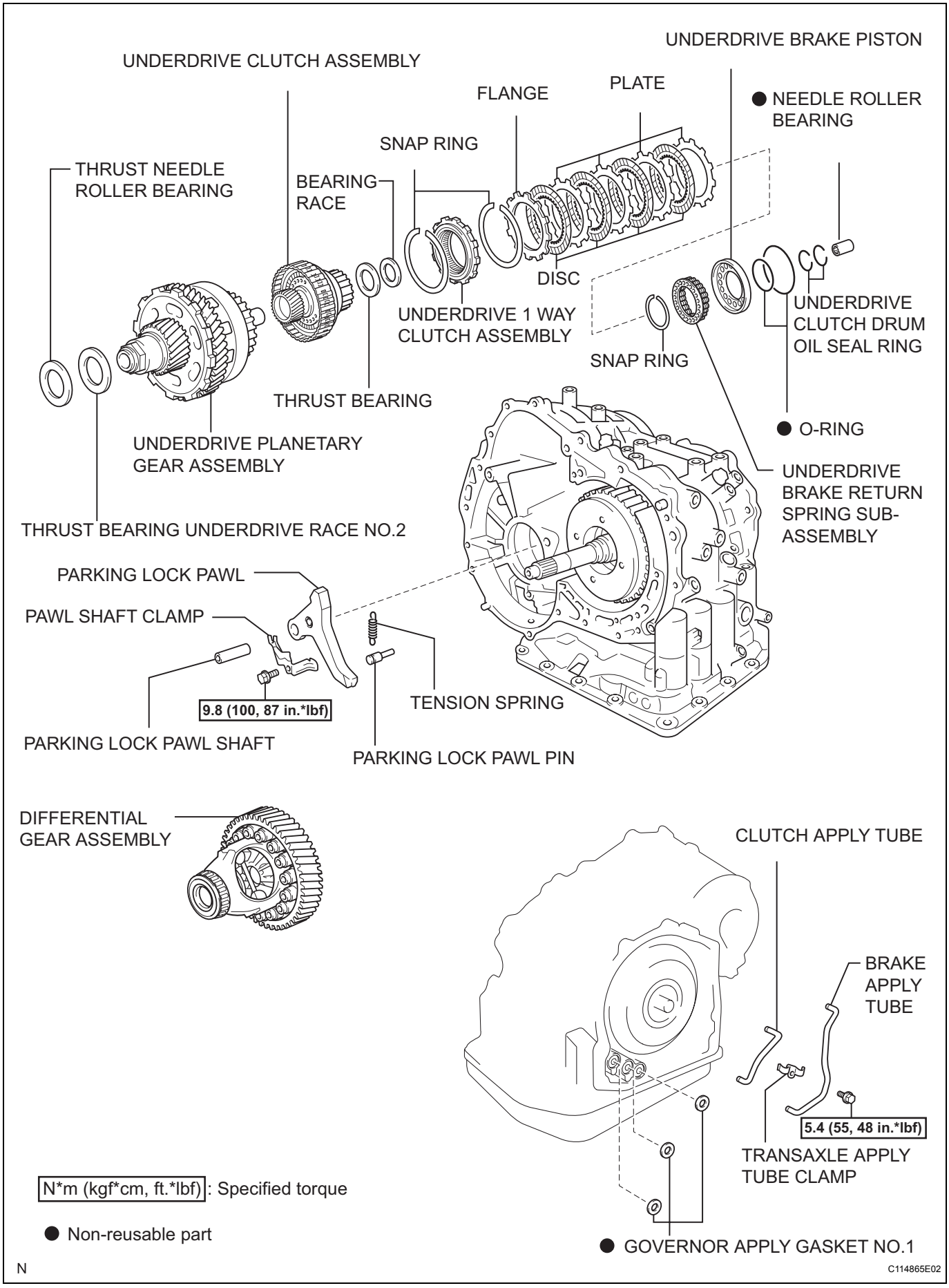
UNDERDRIVE BRAKE PISTON
UNDERDRIVE CLUTCH ASSEMBLY
FLANGE
PLATE
● NEEDLE ROLLER BEARING
SNAP RING
THRUST NEEDLE ROLLER BEARING
BEARING RACE
DISC
UNDERDRIVE 1 WAY CLUTCH ASSEMBLY
UNDERDRIVE CLUTCH DRUM OIL SEAL RING
SNAP RING
THRUST BEARING
● O-RING
UNDERDRIVE PLANETARY GEAR ASSEMBLY
UNDERDRIVE BRAKE RETURN SPRING SUB-ASSEMBLY
THRUST BEARING UNDERDRIVE RACE NO.2
PARKING LOCK PAWL
PAWL SHAFT CLAMP
9.8 (100, 87 in.*lbf)
TENSION SPRING
PARKING LOCK PAWL SHAFT
PARKING LOCK PAWL PIN
DIFFERENTIAL GEAR ASSEMBLY
CLUTCH APPLY TUBE
BRAKE APPLY TUBE
5.4 (55, 48 in.*lbf)
TRANSAXLE APPLY TUBE CLAMP
N*m (kgf*cm, ft.*lbf): Specified torque
● Non-reusable part
● GOVERNOR APPLY GASKET NO.1
N
C114865E02

AX

DISASSEMBLY

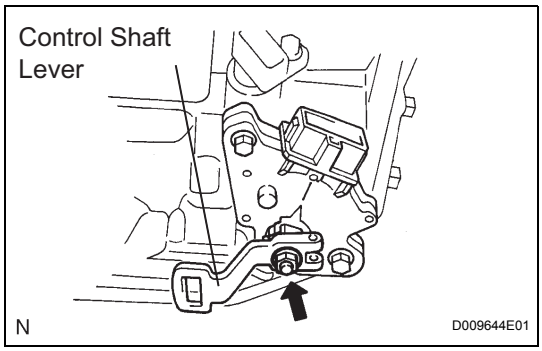

1. REMOVE PARK/NEUTRAL POSITION SWITCH ASSEMBLY

(a) Remove the nut, washer and control shaft lever.

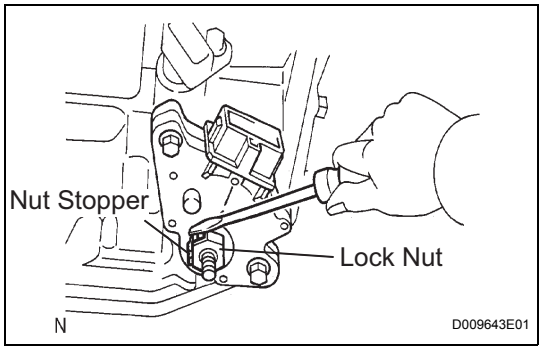

(b) Using a screwdriver, unstake the nut stopper, and remove the lock nut and nut stopper.

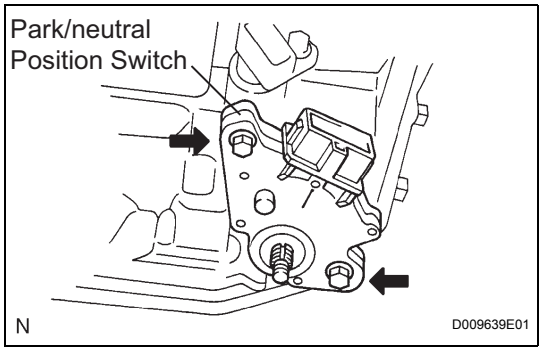

(c) Remove the 2 bolts and pull out the park/neutral position switch.

2. REMOVE BREATHER PLUG HOSE

(a) Remove the breather plug hose from the transaxle case.

AX

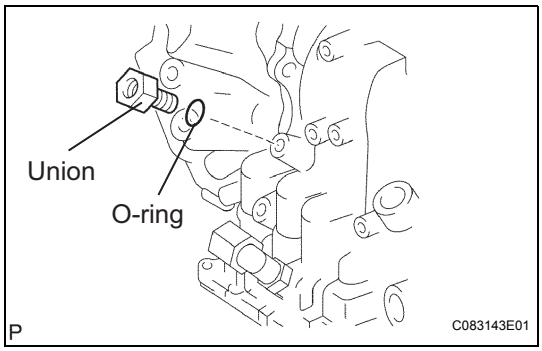

3. REMOVE OIL COOLER TUBE UNION (INLET OIL COOLER UNION)

(a) Remove the union.

(b) Remove the O-ring from the union.

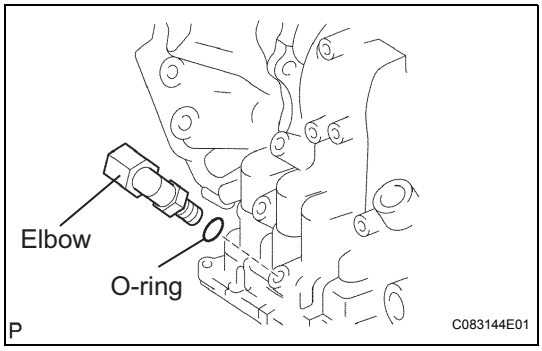

4. REMOVE OIL COOLER TUBE UNION (OUTLET OIL COOLER UNION)

(a) Remove the elbow.

(b) Remove the O-ring from the elbow.

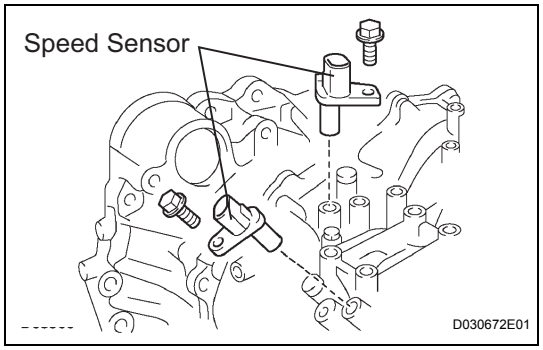

5. REMOVE SPEED SENSOR

(a) Remove the 2 bolts and the 2 speed sensors from the transaxle assembly.

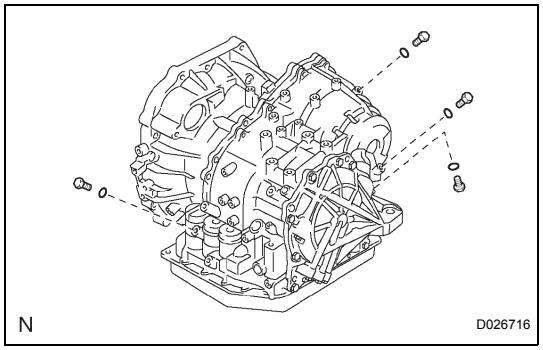

6. REMOVE TRANSAXLE CASE NO.1 PLUG

(a) Remove the 4 transaxle case No.1 plugs from the transaxle case.

(b) Remove the 4 O-rings from the 4 transaxle case No.1 plugs.

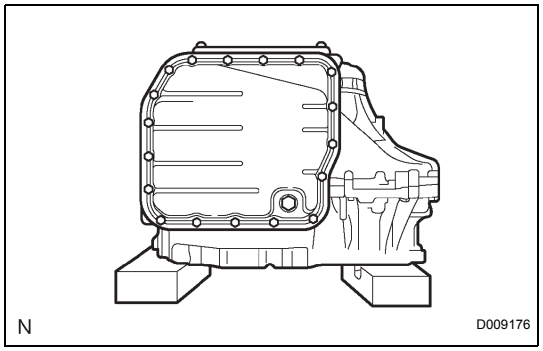

7. FIX AUTOMATIC TRANSAXLE ASSEMBLY

(a) Fix the transaxle assembly.

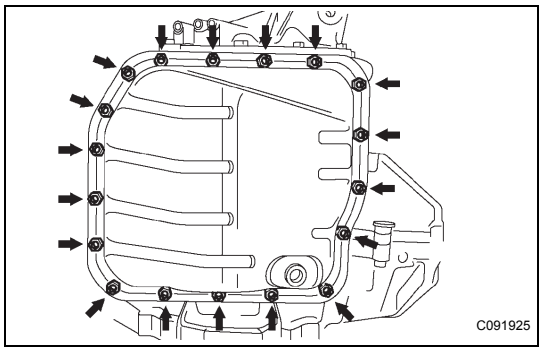

8. REMOVE AUTOMATIC TRANSAXLE OIL PAN SUB-ASSEMBLY

(a) Remove the 18 bolts, oil pan and gasket.

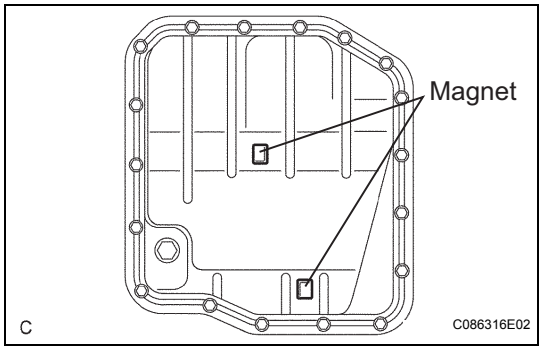

(b) Remove the 2 magnets from the oil pan.

AX

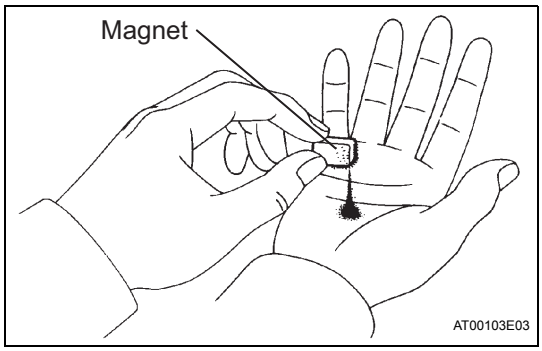

9. INSPECT TRANSMISSION OIL CLEANER MAGNET

(a) Remove the magnets and use them to collect any steel chips. Examine the chips and particles in the pan and on the magnet to determine what type of wear has occurred in the transaxle:

Result:

Steel (magnetic):

Wear of the bearing, gear and plate

Brass (non-magnetic):

Wear of the bushing

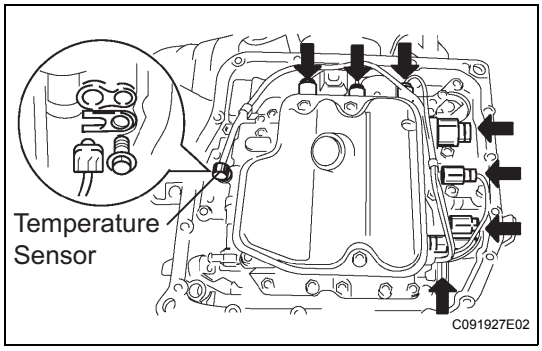

10. DISCONNECT TRANSMISSION WIRE

(a) Remove the 7 connectors from the shift solenoid valves.

(b) Remove the bolt, lock plate and temperature sensor.

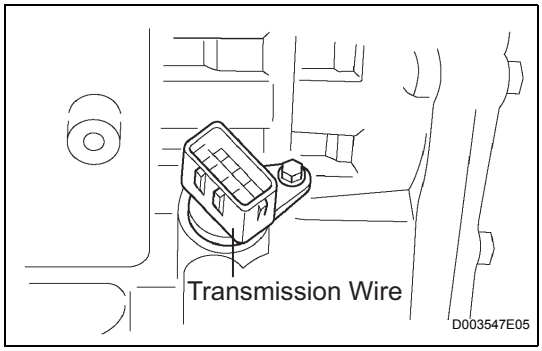

11. REMOVE TRANSMISSION WIRE

(a) Remove the bolt and transmission wire from the transaxle case.

AX

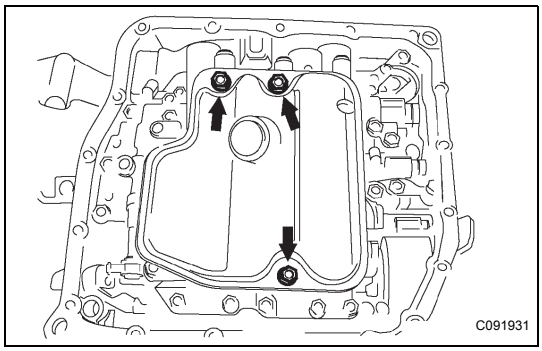

12. REMOVE VALVE BODY OIL STRAINER ASSEMBLY

(a) Remove the 3 bolts and oil strainer.

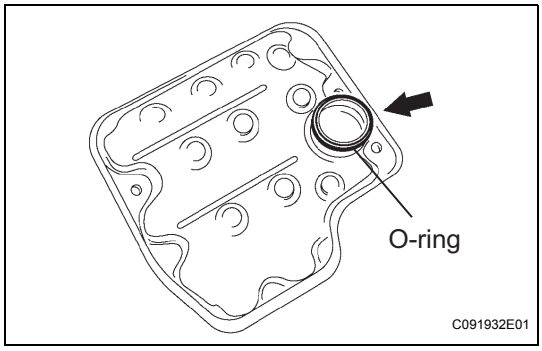

(b) Remove the O-ring from the oil strainer.

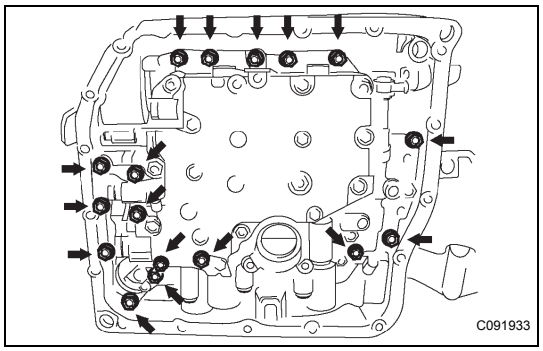

13. REMOVE TRANSMISSION VALVE BODY ASSEMBLY

(a) Support the valve body assembly and remove the 17 bolts and valve body assembly.

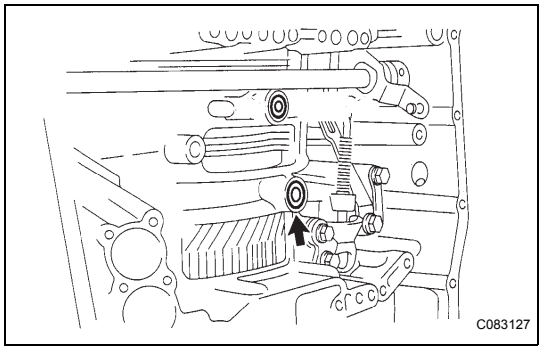

14. REMOVE GOVERNOR APPLY GASKET NO.1

(a) Remove the governor apply gasket No.1 from the transaxle case.

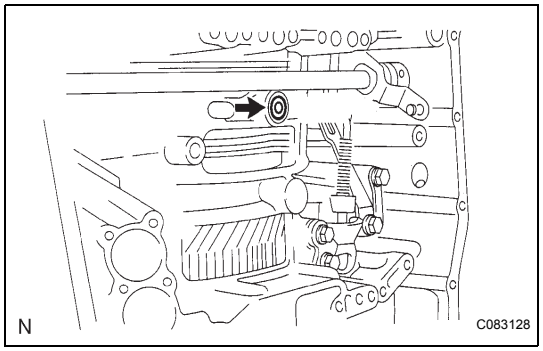

15. REMOVE TRANSAXLE CASE 2ND BRAKE GASKET

(a) Remove the transaxle case 2nd brake gasket from the transaxle case.

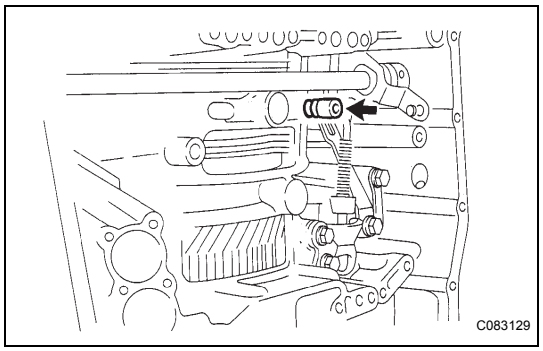

16. REMOVE BRAKE DRUM GASKET

(a) Remove the brake drum gasket from the transaxle case.

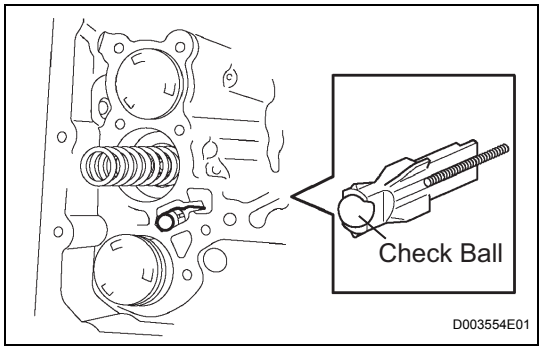

17. REMOVE CHECK BALL BODY

(a) Remove the check ball body and spring from the transaxle case.

AX

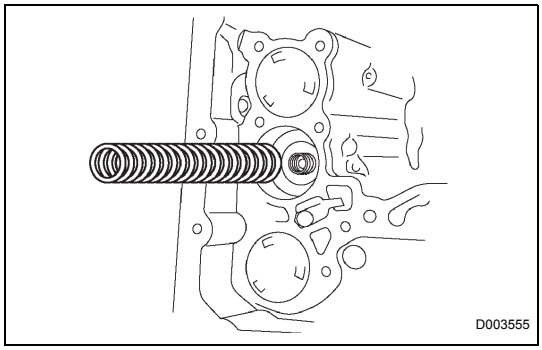

18. REMOVE C-3 ACCUMULATOR PISTON

(a) Remove the spring from the C-3 accumulator piston.

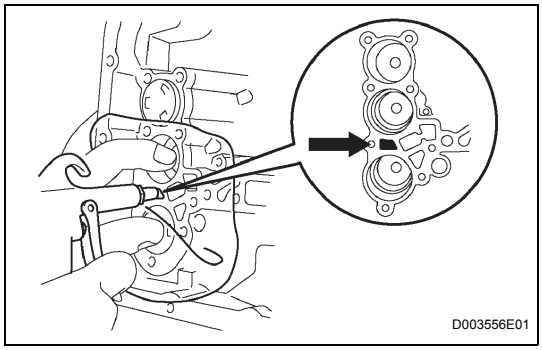

(b) Apply compressed air (392 kPa, 4.0 kgf/cm^2, 57 psi) to the oil hole and remove the C-3 accumulator piston.

NOTICE:

- **Applying compressed air may cause the piston to jump-out. When removing the piston, hold it using a waste cloth.**
- **Take care not to splash ATF when applying compressed air.**

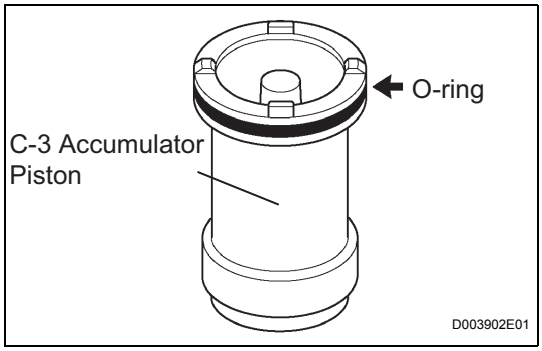

(c) Remove the O-ring from the C-3 accumulator piston.

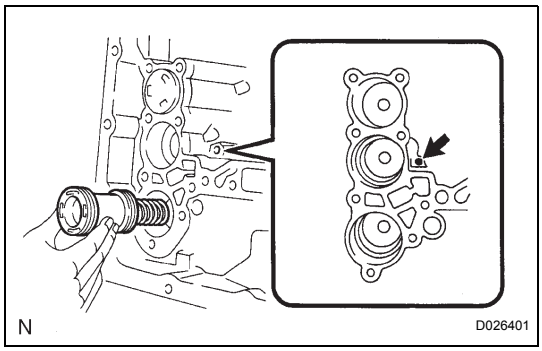

19. REMOVE REVERSE CLUTCH ACCUMULATOR PISTON

(a) Apply compressed air (392 kPa, 4.0 kgf/cm^2, 57 psi) to the oil hole and remove the reverse accumulator piston and spring.

NOTICE:

- **Applying compressed air may cause the piston to jump-out. When removing the piston, hold it using a waste cloth.**
- **Take care not to splash ATF when applying compressed air.**

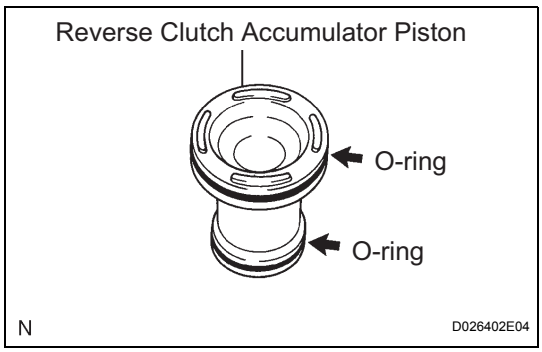

(b) Remove the 2 O-rings from the reverse clutch accumulator piston.

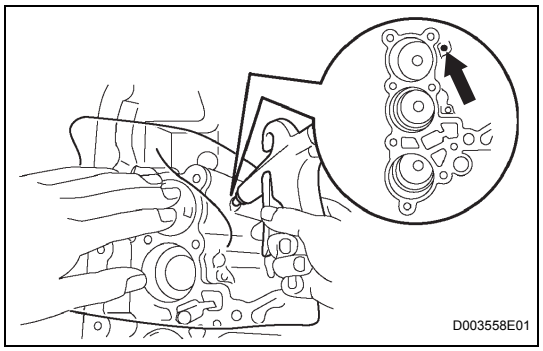

20. REMOVE B-3 ACCUMULATOR PISTON

(a) Apply compressed air (392 kPa, 4.0 kgf/cm^2, 57 psi) to the oil hole and remove the B-3 accumulator piston and 2 springs.

NOTICE:

- **Applying compressed air may cause the piston to jump-out. When removing the piston, hold it using a waste cloth.**
- **Take care not to splash ATF when applying compressed air.**

(b) Remove the O-ring from the B-3 accumulator piston.

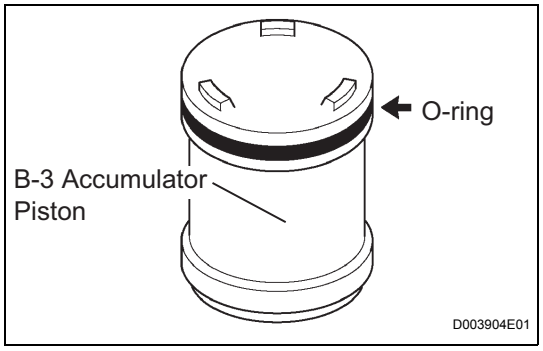

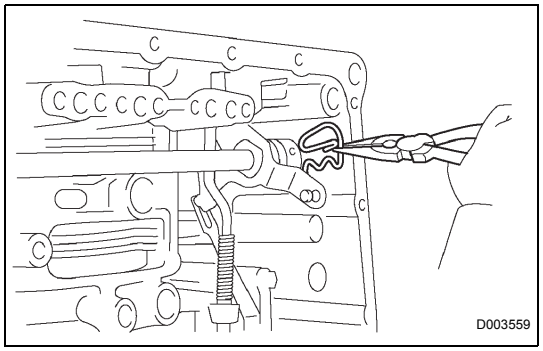

21. REMOVE MANUAL VALVE LEVER SHAFT RETAINER SPRING

(a) Using needle-nose pliers, remove the manual valve lever shaft retainer spring.

AX

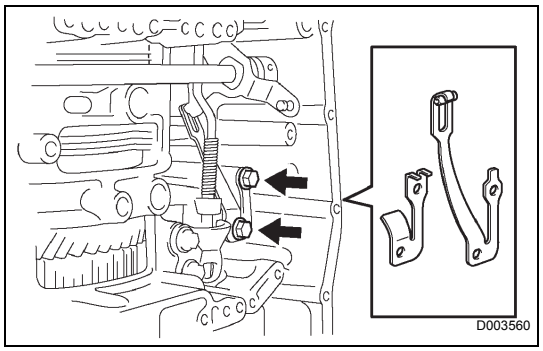

22. REMOVE MANUAL DETENT SPRING SUB-ASSEMBLY

(a) Remove the 2 bolts, the manual detent spring sub-assembly and cover.

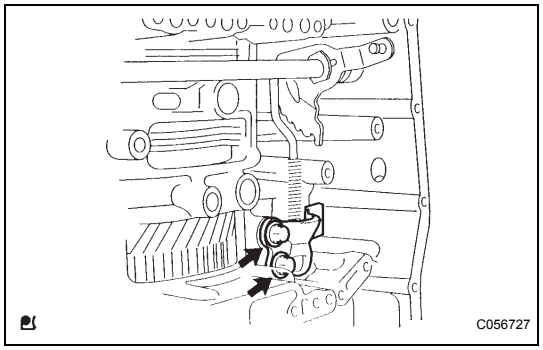

23. REMOVE PARKING LOCK PAWL BRACKET

(a) Remove the 2 bolts and parking lock pawl bracket.

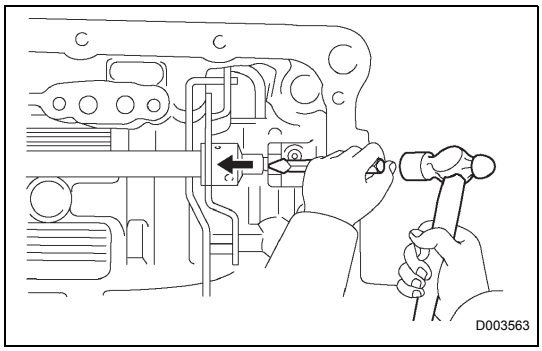

24. REMOVE MANUAL VALVE LEVER SUB-ASSEMBLY

(a) Using a chisel and hammer, cut off and remove the spacer.

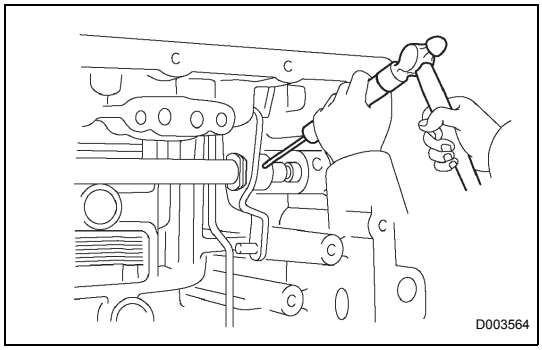

(b) Using a pin punch (ϕ35 mm) and hammer, drive out the pin.
HINT:
Slowly drive out the pin so that it will not fall into the transaxle case.

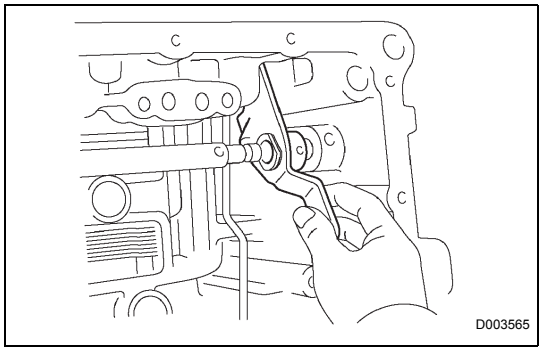

(c) Remove the manual valve lever shaft and manual valve lever.

AX

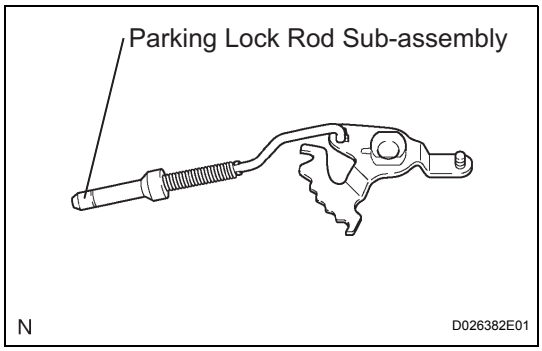

25. REMOVE PARKING LOCK ROD SUB-ASSEMBLY

(a) Remove the parking lock rod from the manual valve lever.

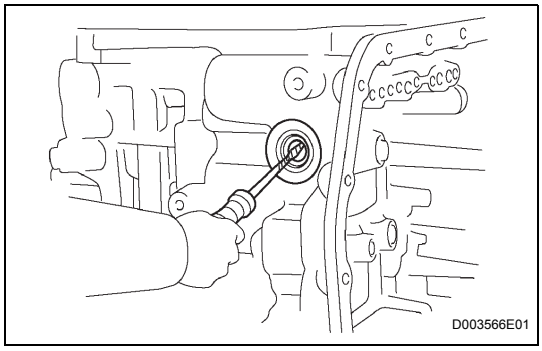

26. REMOVE MANUAL VALVE LEVER SHAFT OIL SEAL

(a) Using a screwdriver, remove the oil seal from the transaxle case.
NOTICE:
Do not apply excessive force when removing the oil seal.

27. FIX AUTOMATIC TRANSAXLE ASSEMBLY

(a) Fix the transaxle case with the oil pump side facing up.

28. INSPECT INPUT SHAFT ENDPLAY

HINT:

(See page AX-205)

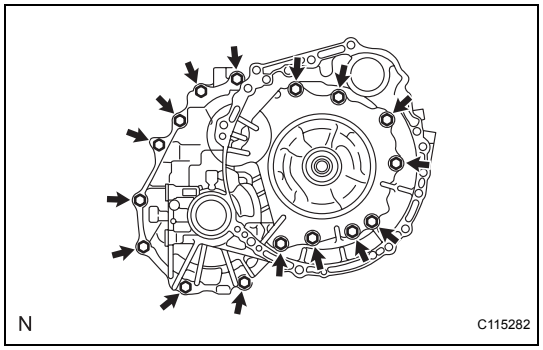

29. REMOVE TRANSAXLE HOUSING

(a) Remove the 16 bolts.

(b) Tap on the circumference of the transaxle housing with a plastic hammer to remove the transaxle housing from the transaxle case.

NOTICE:

The differential may be accidentally removed when the transaxle housing is removed.

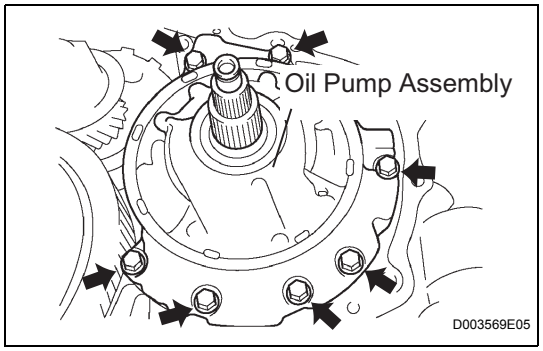

30. REMOVE OIL PUMP ASSEMBLY

(a) Remove the 7 bolts and oil pump from the transaxle case.

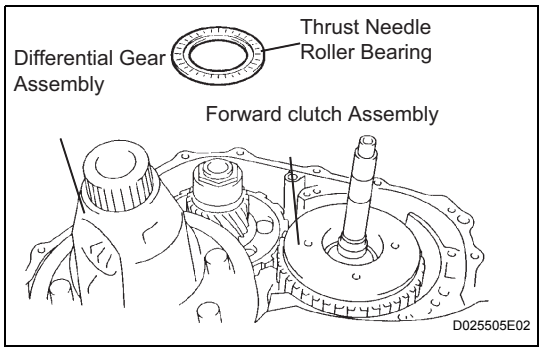

31. REMOVE THRUST NEEDLE ROLLER BEARING

(a) Remove the thrust needle roller bearing from the underdrive planetary gear assembly.

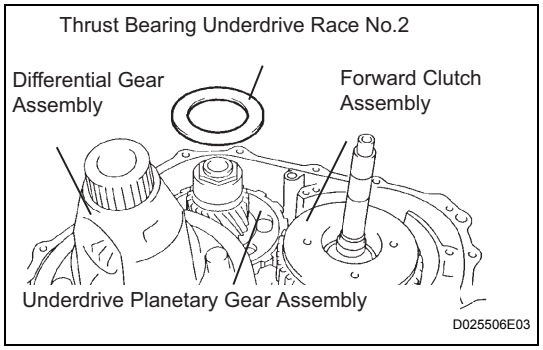

32. REMOVE THRUST BEARING UNDERDRIVE RACE NO.2

(a) Remove the thrust bearing underdrive race No.2 from the underdrive planetary gear assembly.

AX

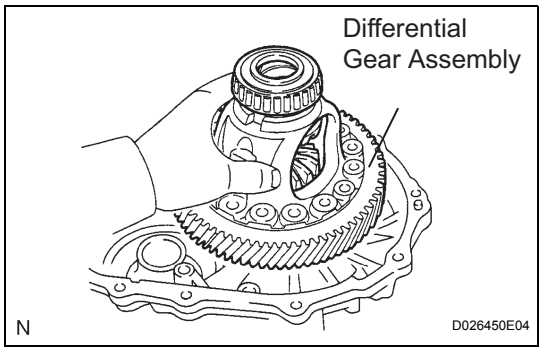

33. REMOVE DIFFERENTIAL GEAR ASSEMBLY

(a) Remove the differential gear assembly from the transaxle case.

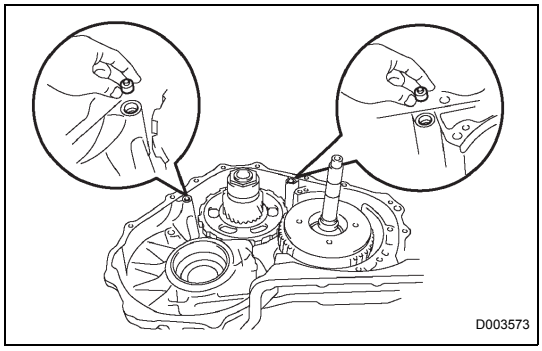

34. REMOVE OVERDRIVE BRAKE GASKET

(a) Remove the 2 overdrive brake gaskets from the transaxle case.

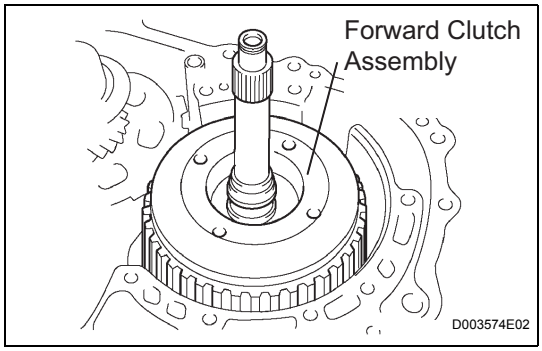

35. REMOVE FORWARD CLUTCH ASSEMBLY

(a) Remove the forward clutch assembly from the transaxle case.

AX

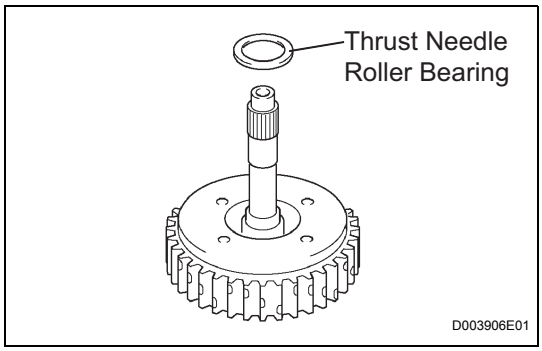

(b) Remove the thrust needle roller bearing from the forward clutch.

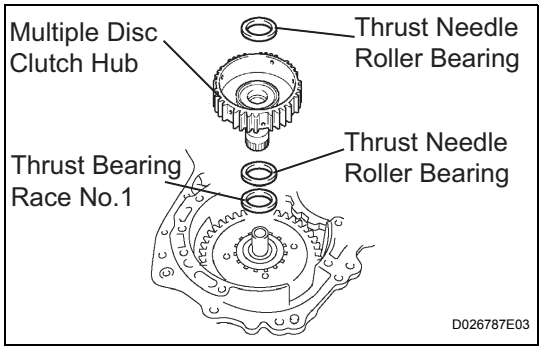

36. REMOVE MULTIPLE DISC CLUTCH HUB

(a) Remove the thrust needle roller bearing, multiple disc clutch hub, thrust needle roller bearing and thrust bearing race No.1 from the transaxle case.

37. INSPECT MULTIPLE DISC CLUTCH CLUTCH HUB

HINT:

(See page AX-202)

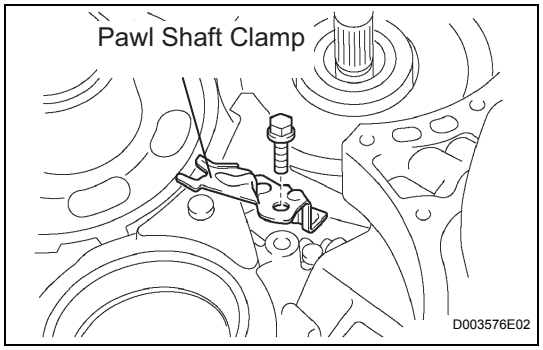

38. REMOVE UNDERDRIVE PLANETARY GEAR ASSEMBLY

(a) Remove the bolt and pawl shaft clamp.

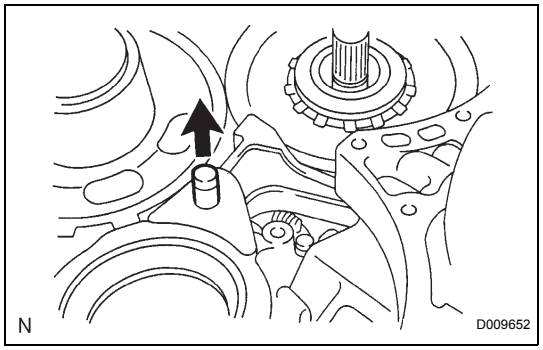

(b) Remove the parking lock pawl shaft.

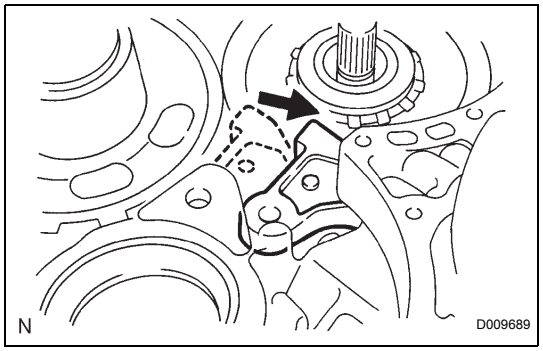

(c) Push the parking lock pawl.
HINT:
Failure to do so will cause interference when the underdrive planetary gear is removed.

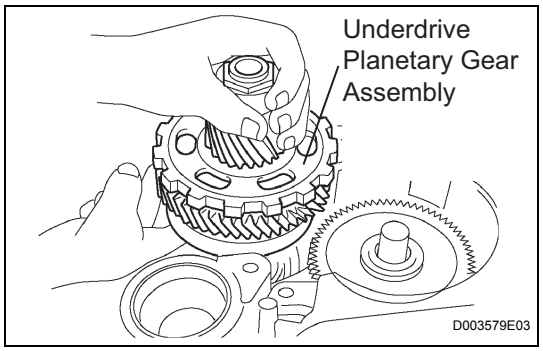

(d) Remove the underdrive planetary gear assembly from the transaxle case.
NOTICE:
Be careful so that the underdrive planetary gear assembly will not fall out.

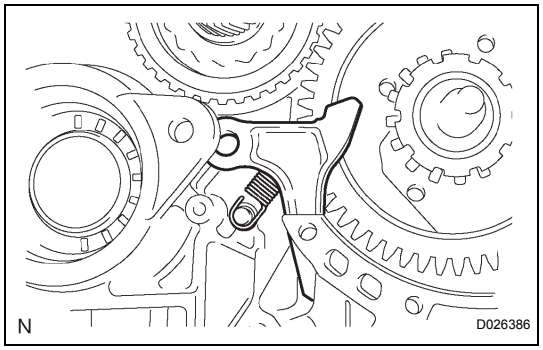

39. REMOVE PARKING LOCK PAWL

(a) Remove the spring, pawl pin and parking lock pawl.

AX

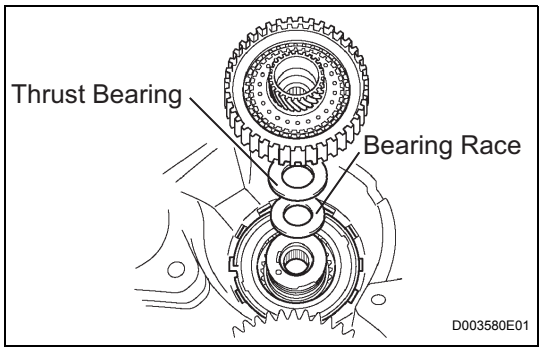

40. REMOVE UNDERDRIVE CLUTCH ASSEMBLY

(a) Remove the underdrive clutch assembly, thrust bearing and bearing race from the transaxle case.

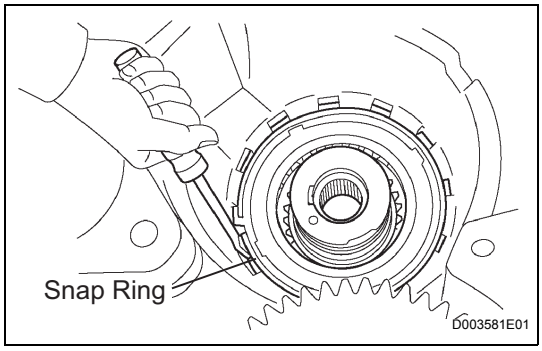

41. REMOVE UNDERDRIVE 1-WAY CLUTCH ASSEMBLY

(a) Using a screwdriver, remove the snap ring from the transaxle case.

NOTICE:
Do not apply excessive force when removing the snap ring.

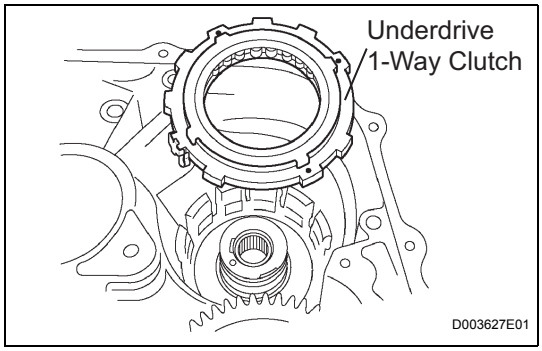

(b) Remove the underdrive 1-way clutch from the transaxle case.

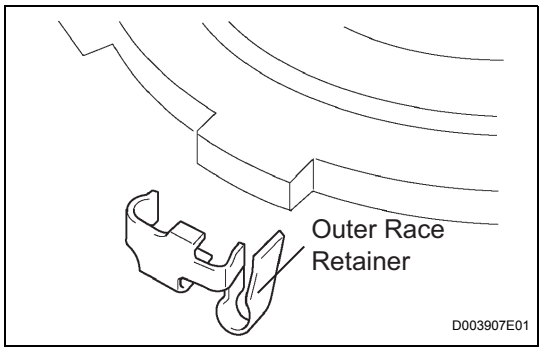

(c) Remove the outer race retainer from the 1-way clutch.

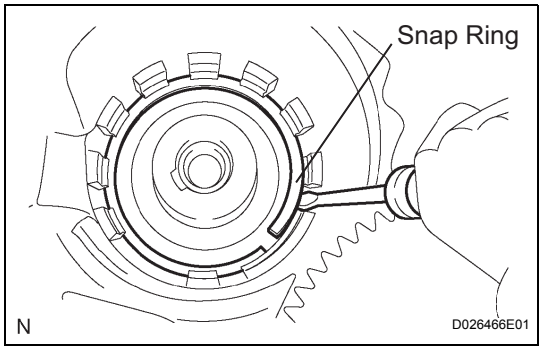

42. REMOVE UNDERDRIVE CLUTCH DISC NO.2

(a) Using a screwdriver, remove the snap ring.

NOTICE:
Do not apply excessive force when removing the snap ring.

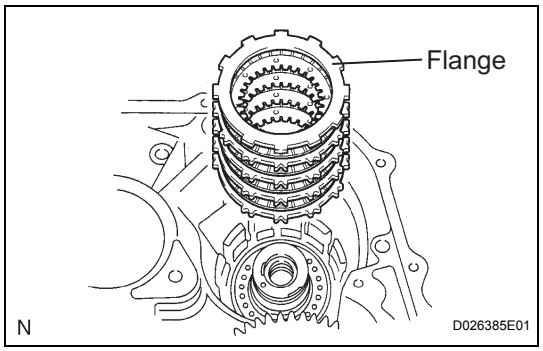

(b) Remove the flange, 4 discs and 4 plates from the transaxle case.

43. INSPECT UNDERDRIVE CLUTCH DISC NO.2

HINT:

(See page AX-202)

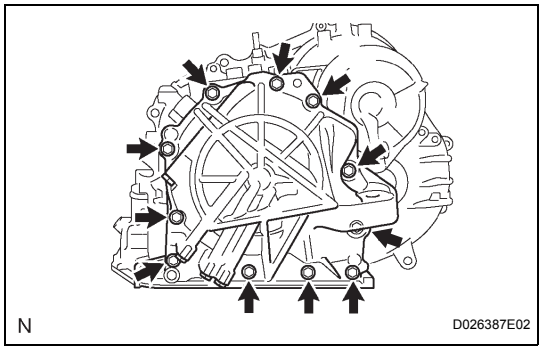

44. REMOVE TRANSAXLE REAR COVER SUB-ASSEMBLY

(a) Remove the 11 bolts.

(b) Tap on the circumference of the rear cover with a plastic hammer to remove the transaxle rear cover from the transaxle case.

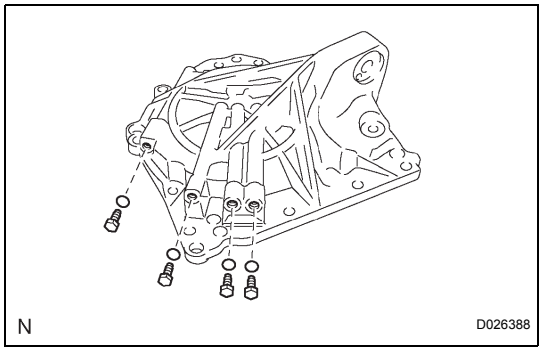

45. REMOVE TRANSAXLE CASE NO.1 PLUG

(a) Remove the 4 transaxle case No.1 plugs from the transaxle rear cover.

(b) Remove the 4 O-rings from the 4 transaxle case No.1 plugs.

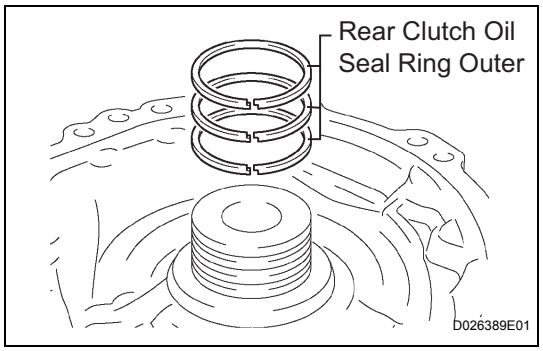

46. REMOVE REAR CLUTCH OIL SEAL RING OUTER

(a) Remove the 3 rear clutch oil seal rings from the transaxle rear cover.

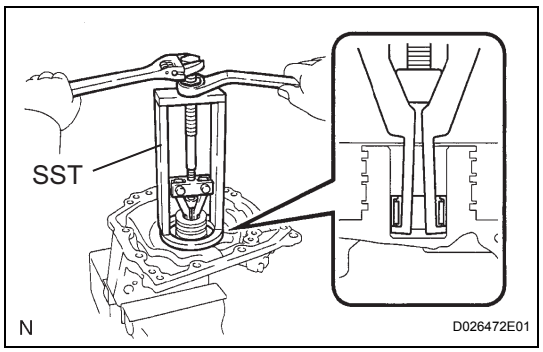

47. REMOVE NEEDLE-ROLLER BEARING

(a) Using SST, remove the needle-roller bearing from the transaxle rear cover.

SST 09387-00041 (09387-01021, 09387-01030, 09387-01040)

AX

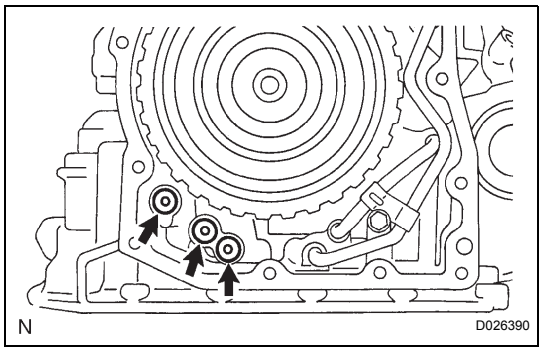

48. REMOVE GOVERNOR APPLY GASKET NO.1

(a) Using a screwdriver, remove the 3 apply gaskets.

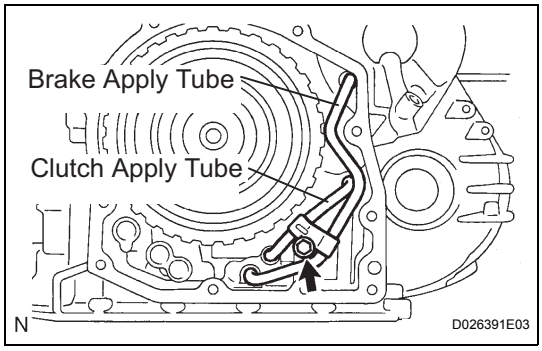

49. REMOVE BRAKE APPLY TUBE

(a) Remove the bolt, clamp and brake apply tube.
(b) Remove the clutch apply tube.
(c) Remove the brake apply tube from the clamp.

NOTICE:
Do not bend the tubes.

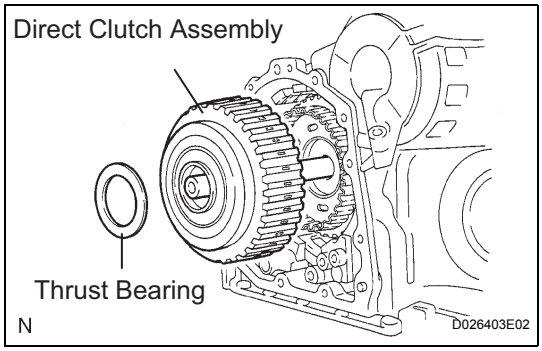

50. REMOVE DIRECT CLUTCH ASSEMBLY

(a) Remove the thrust bearing and the direct clutch assembly from the transaxle case.

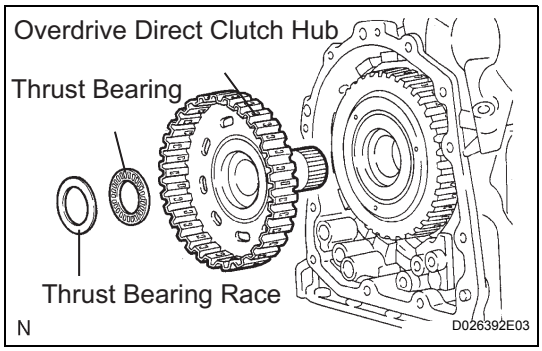

51. REMOVE OVERDRIVE DIRECT CLUTCH HUB SUB-ASSEMBLY

(a) Remove the thrust bearing race, thrust bearing and overdrive direct clutch hub from the planetary gear assembly.

52. INSPECT OVERDRIVE DIRECT CLUTCH DRUM SUB-ASSEMBLY

HINT:
(See page AX-203)

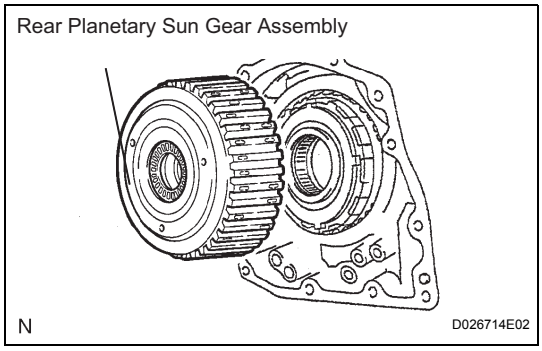

53. REMOVE REAR PLANETARY SUN GEAR ASSEMBLY

(a) Remove the rear planetary sun gear assembly from the transaxle case.

AX

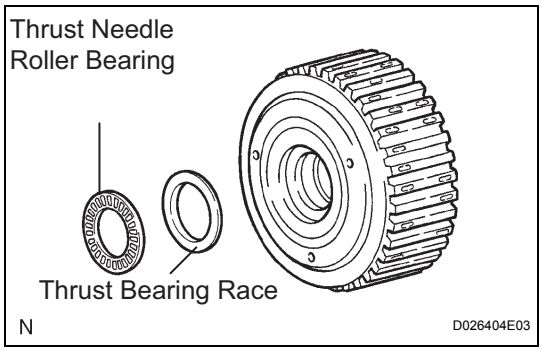

(b) Remove the thrust needle roller bearing and thrust bearing race from the rear planetary sun gear assembly.

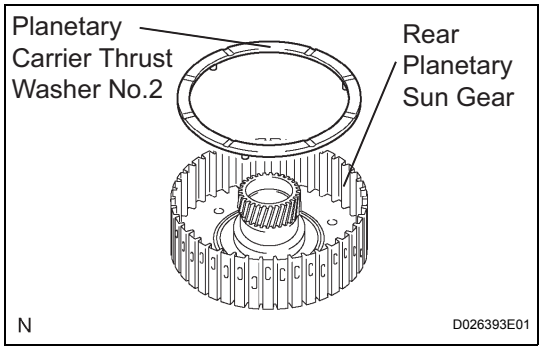

(c) Remove the planetary carrier thrust washer No.2 from the rear planetary sun gear assembly.

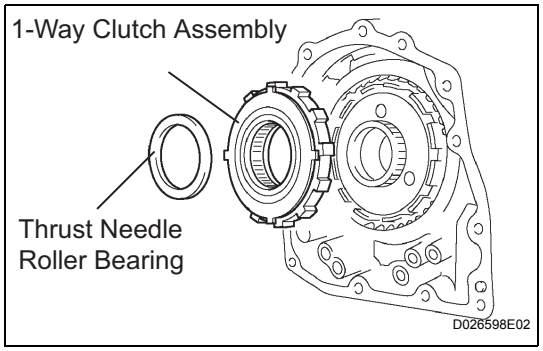

54. REMOVE 1-WAY CLUTCH ASSEMBLY

(a) Remove the 1-way clutch assembly and the thrust needle roller bearing from the transaxle case.

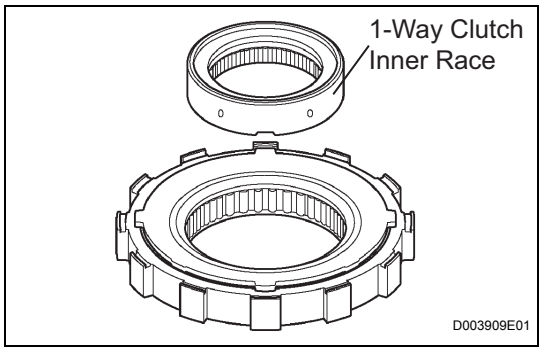

(b) Remove the 1-way clutch inner race from the 1-way clutch assembly.

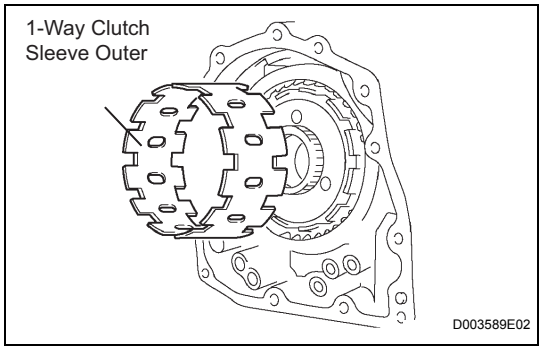

55. REMOVE 1-WAY CLUTCH SLEEVE OUTER

(a) Remove the 1-way clutch sleeve outer from the transaxle case.

AX

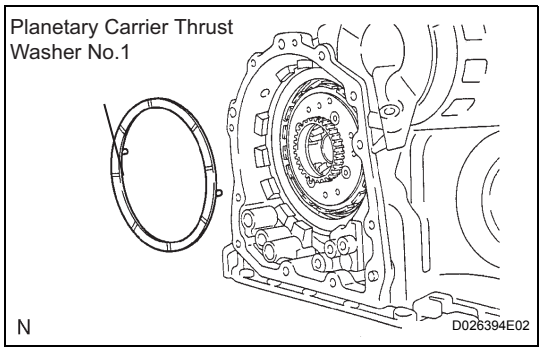

56. REMOVE PLANETARY CARRIER THRUST WASHER NO.1

(a) Remove the planetary carrier thrust washer No.1 from the planetary gear assembly.

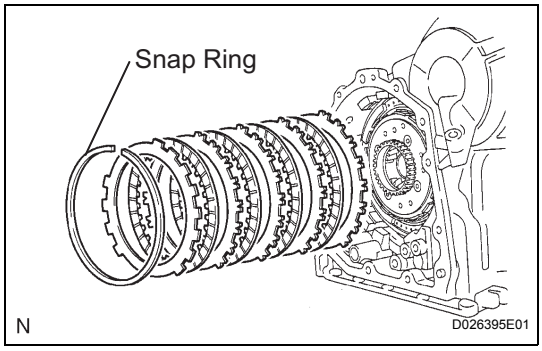

57. REMOVE 2ND BRAKE CLUTCH DISC

(a) Using a screwdriver, remove the snap ring.

(b) Remove the flange, 4 discs and 4 plates from the transaxle case.

58. INSPECT 2ND BRAKE CLUTCH DISC

HINT:

(See page AX-203)

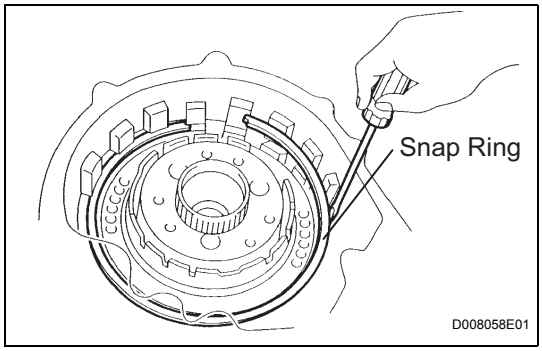

59. REMOVE 2ND BRAKE PISTON ASSEMBLY

(a) Using a screwdriver, remove the snap ring.

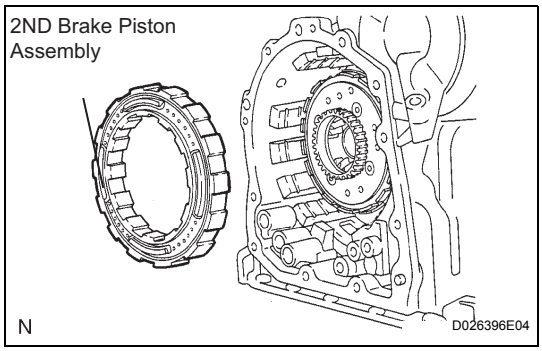

(b) Remove the 2ND brake piston assembly from the transaxle case.

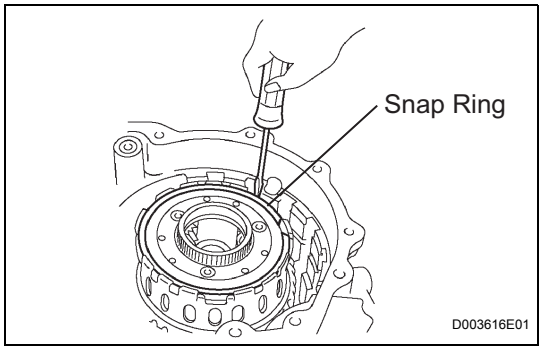

60. REMOVE REAR PLANETARY GEAR ASSEMBLY

(a) Using a screwdriver, remove the snap ring.

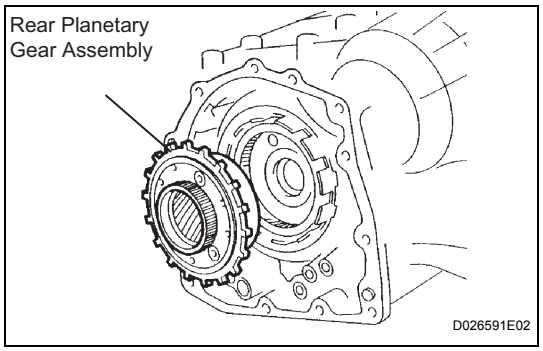

(b) Remove the rear planetary gear assembly from the transaxle case.

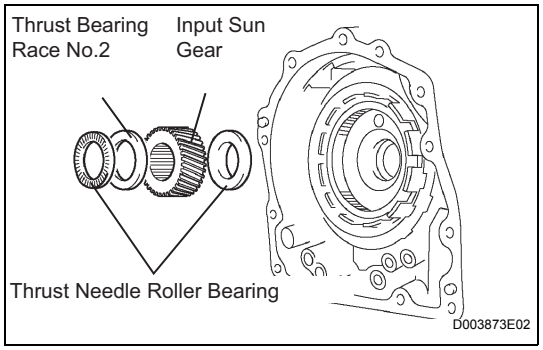

61. REMOVE INPUT SUN GEAR

(a) Remove the 2 thrust needle roller bearings, thrust bearing race No.2 and the input sun gear from the transaxle case.

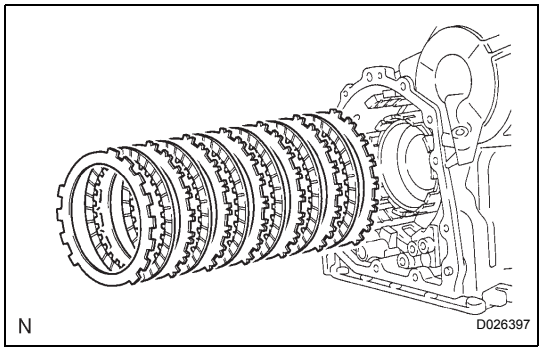

62. REMOVE 1ST AND REVERSE BRAKE CLUTCH DISC

(a) Remove the flange, 6 discs and 6 plates from the transaxle case.

63. INSPECT 1ST AND REVERSE BRAKE CLUTCH DISC

HINT:

(See page AX-203)

AX

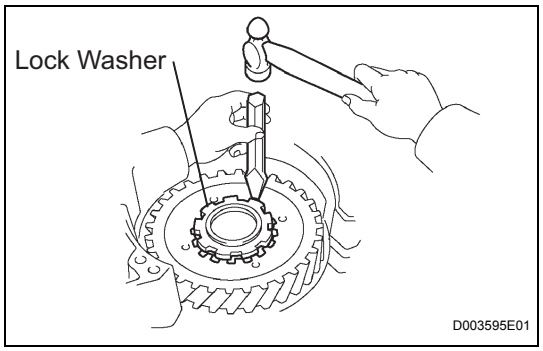

64. REMOVE FRONT PLANETARY GEAR ASSEMBLY

(a) Using a chisel and hammer, unstake the lock washer.

NOTICE:

Push down all claws of the washer. Otherwise the SST cannot be fully pressed against the nut, and cannot loosen the nut.

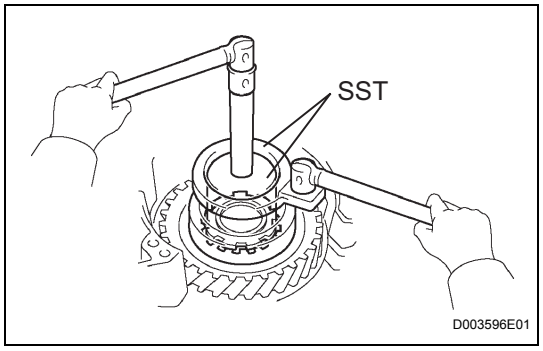

(b) Using SST, remove the nut.

SST 09387-00030, 09387-00080

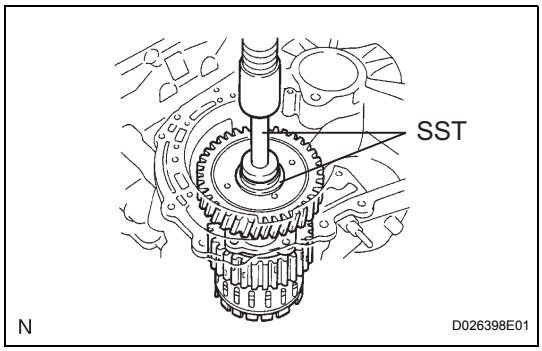

(c) Using SST and a press, remove the front planetary gear assembly from the counter drive gear.
SST 09950-60010 (09951-00450), 09950-70010 (09951-07100)

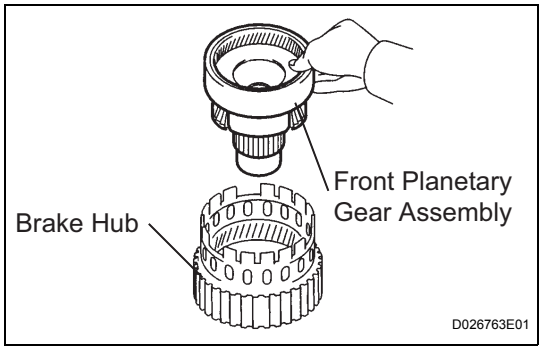

(d) Remove the front planetary gear assembly from the brake hub.

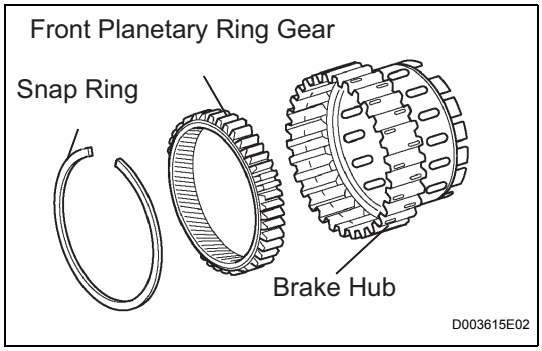

65. REMOVE FRONT PLANETARY RING GEAR

(a) Using a screwdriver, remove the snap ring and front planetary ring gear from the brake hub.

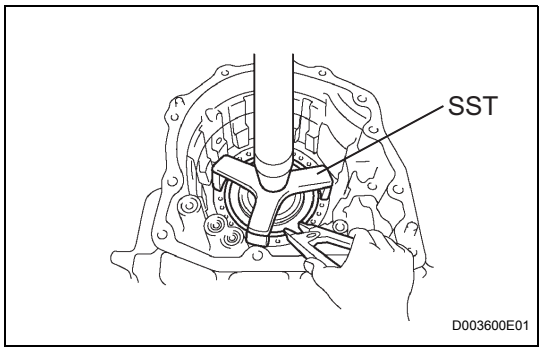

66. REMOVE 1ST AND REVERSE BRAKE RETURN SPRING SUB-ASSEMBLY

(a) Place SST on the return spring, and compress the return spring with a press.
SST 09387-00070

(b) Using a snap ring expander, remove the snap ring.
NOTICE:
- **Stop the press when the spring seat is lowered 1 to 2 mm (0.039 to 0.078 in.) from the snap ring groove, to prevent the spring seat from being deformed.**
- **Do not expand the snap ring excessively.**

67. INSPECT 1ST AND REVERSE BRAKE RETURN SPRING SUB-ASSEMBLY

HINT:
(See page AX-203)

AX

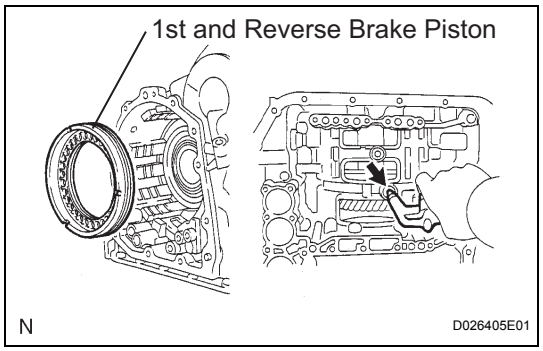

68. REMOVE 1ST AND REVERSE BRAKE PISTON

(a) Apply compressed air (392 kPa, 4.0 kgf/cm^2, 57 psi) to the transaxle case to remove the 1st and reverse brake piston.

NOTICE:

- **Applying compressed air may cause the piston to jump-out. When removing the piston, hold it using a waste cloth.**
- **Take care not to splash ATF when applying compressed air.**

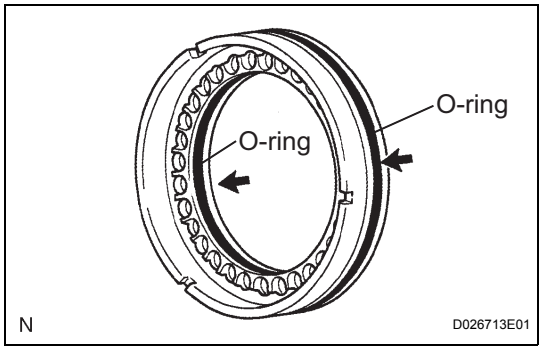

(b) Remove the 2 O-rings from the 1st and reverse brake piston.

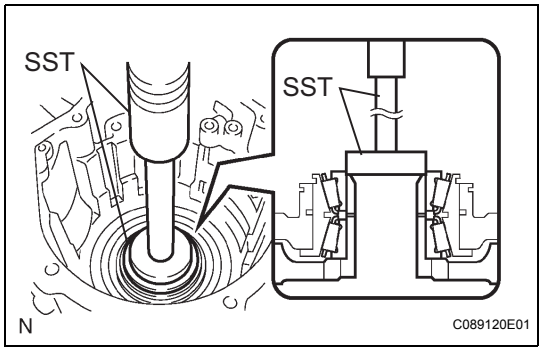

69. REMOVE COUNTER DRIVE GEAR

(a) Using SST and a press, remove the counter drive gear from the transaxle case.

SST 09950-60010 (09951-00590), 09950-70010 (09951-07100)

AX

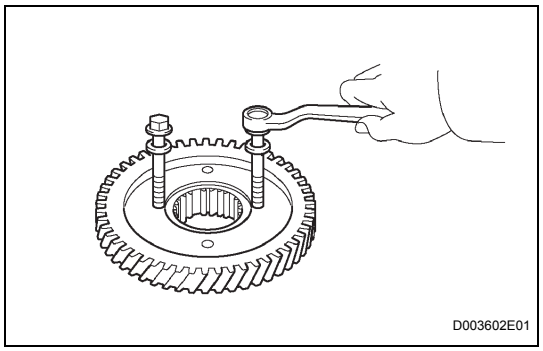

(b) As shown in the illustration, tighten the 2 bolts evenly and make clearance of approx. 20.0 mm (0.787 in.) between the counter drive gear and the inner race.

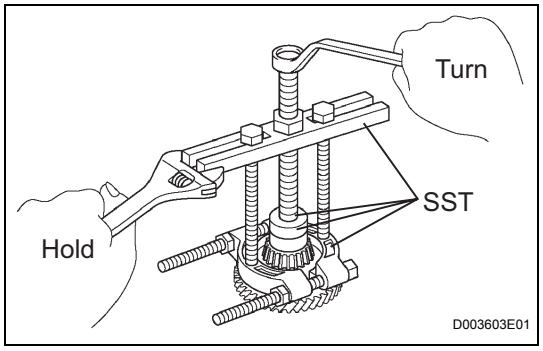

(c) Using SST, remove the tapered roller bearing.

SST 09950-60010 (09951-00590), 09950-00020, 09950-00030, 09950-40011 (09957-04010)

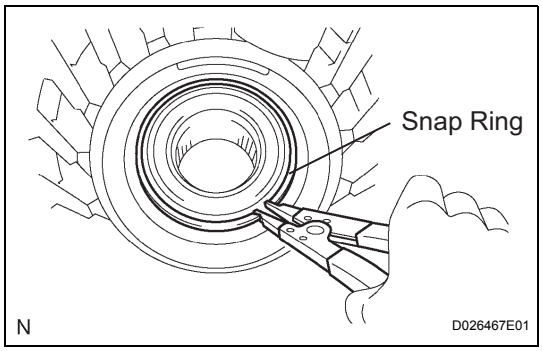

70. REMOVE TRANSFER DRIVEN PINION FRONT BEARING

(a) Using a snap ring expander, remove the snap ring.

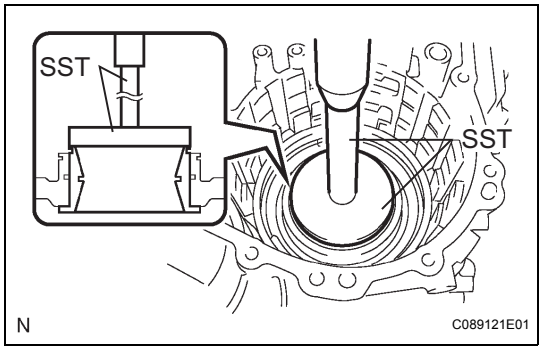

(b) Using SST and a press, remove the bearing outer race.
SST 09950-60020 (09951-00910)

71. REMOVE BREATHER PLUG NO.2 (ATM)

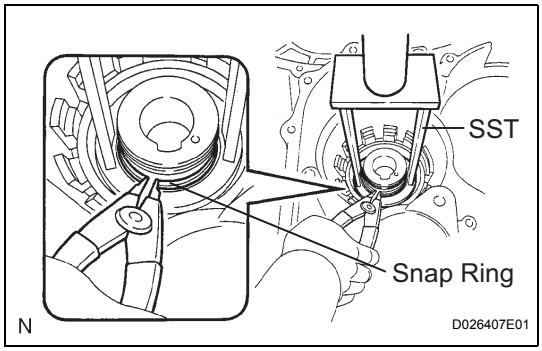

72. REMOVE UNDERDRIVE BRAKE RETURN SPRING SUB-ASSEMBLY

(a) Place SST on the return spring, and compress the return spring with a press.
SST 09387-00020

(b) Using a snap ring expander, remove the snap ring.
NOTICE:
- **Stop the press when the spring seat is lowered 1 to 2 mm (0.039 to 0.078 in.) from the snap ring groove, to prevent the spring seat from being deformed.**
- **Do not expand the snap ring excessively.**

73. INSPECT UNDERDRIVE BRAKE RETURN SPRING SUB-ASSEMBLY

HINT:
(See page AX-204)

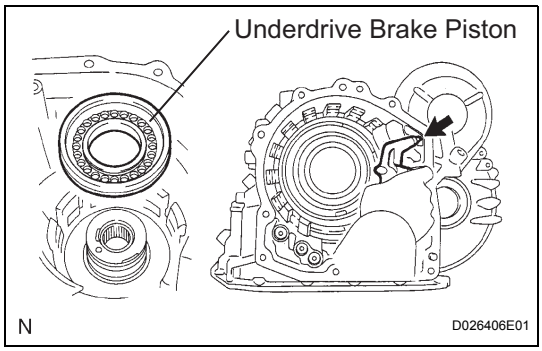

74. REMOVE UNDERDRIVE BRAKE PISTON

(a) Apply compressed air (392 kPa, 4.0 kgf/cm^2, 57 psi) to the transaxle case to remove the underdrive brake piston.

AX

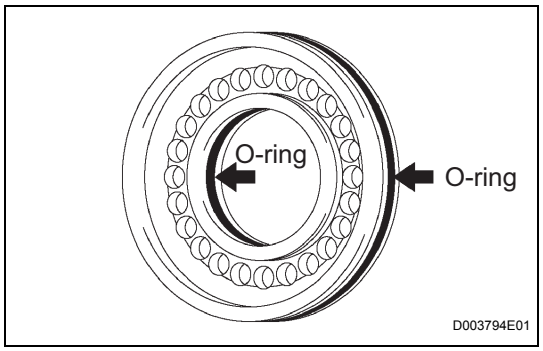

(b) Remove the 2 O-rings from the underdrive brake piston.

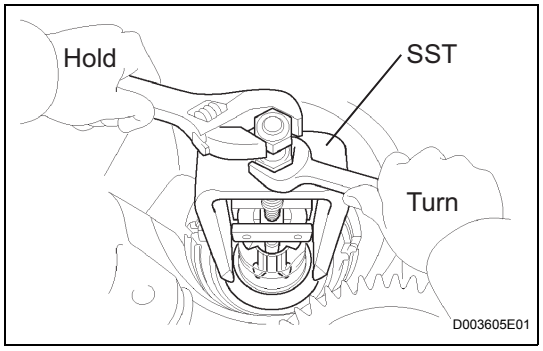

75. REMOVE NEEDLE ROLLER BEARING

(a) Using SST, remove the needleroller bearing from the transaxle case.

SST 09387-00041 (09387-01010, 09387-01030, 09387-01040)

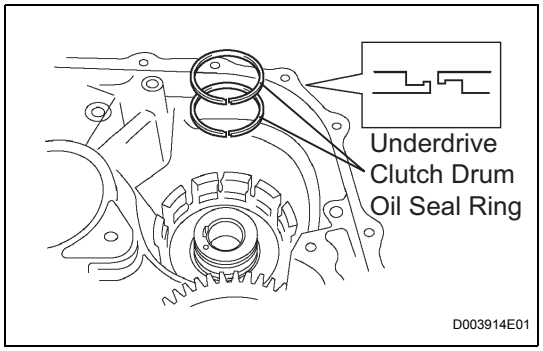

76. REMOVE UNDERDRIVE CLUTCH DRUM OIL SEAL RING

(a) Remove the 2 oil seal rings from the transaxle case.

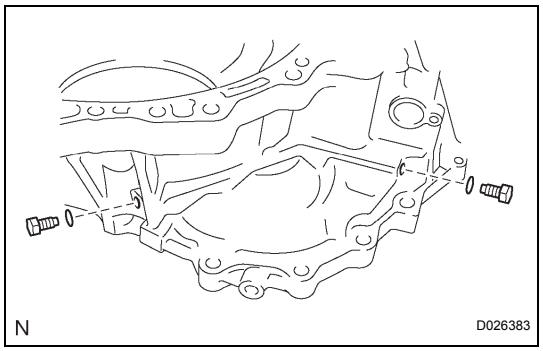

77. REMOVE TRANSAXLE CASE NO.1 PLUG

(a) Remove the 2 transaxle case No.1 plugs.

(b) Remove the 2 O-rings from the 2 transaxle case No.1 plugs.

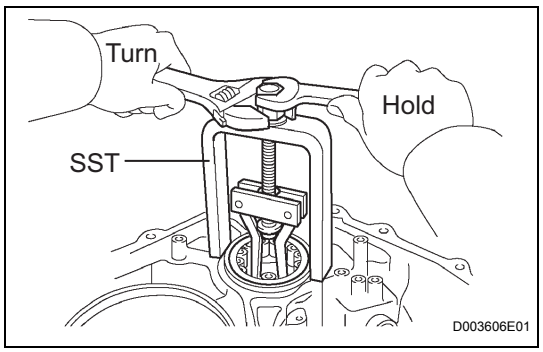

78. REMOVE UNDERDRIVE CYLINDRICAL ROLLER BEARING

(a) Using SST, remove the underdrive cylindrical roller bearing from the transaxle case.

SST 09514-35011

AX

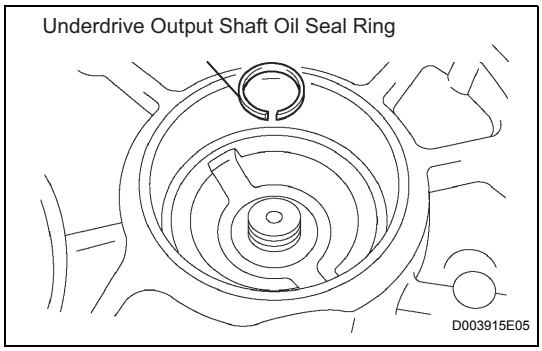

79. REMOVE UNDERDRIVE OUTPUT SHAFT OIL SEAL RING

(a) Remove the oil seal ring from the transaxle housing.

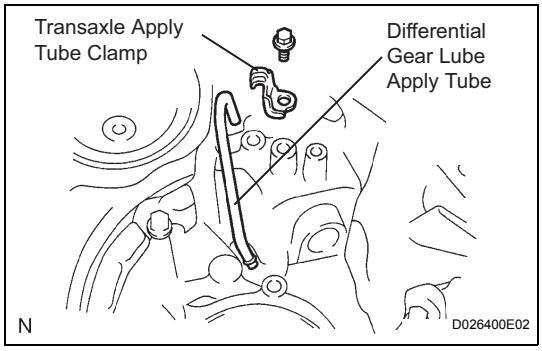

80. REMOVE DIFFERENTIAL GEAR LUBE APPLY TUBE

(a) Remove the bolt, transaxle apply tube clamp and differential gear lube apply tube from the transaxle housing.

NOTICE:

Do not bend the tubes.

INSPECTION

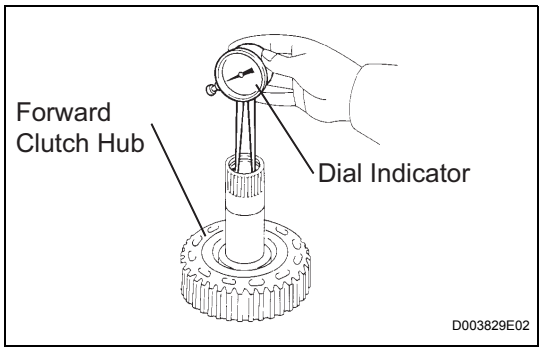

1. INSPECT MULTIPLE DISC CLUTCH HUB

(a) Using a dial indicator, measure the inside diameter of the forward clutch hub bushing

Standard inside diameter:

23.025 to 23.046 mm (0.9065 to 0.9073 in.)

Maximum inside diameter:

23.09 mm (0.9091 in.)

NOTICE:

Check the contact surface of the bushing in the direct clutch shaft. If any scratch or discoloration is found, replace the direct clutch sub-assembly with a new one.

If the inside diameter is greater than the maximum, replace the forward clutch hub with a new one.

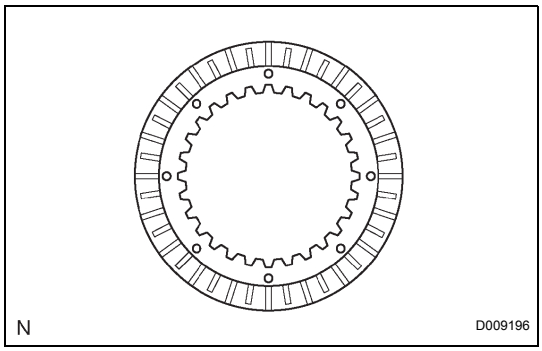

2. INSPECT UNDERDRIVE CLUTCH DISC NO.2

(a) Check if the sliding surfaces of the disc, plate and flange are worn or burnt.

If necessary, replace them.

NOTICE:

- **If the lining of the disc comes off or discolors, or if a part of the groove is worn, replace all discs.**
- **Before installing new discs, immerse them in ATF for at least 15 minutes.**

AX

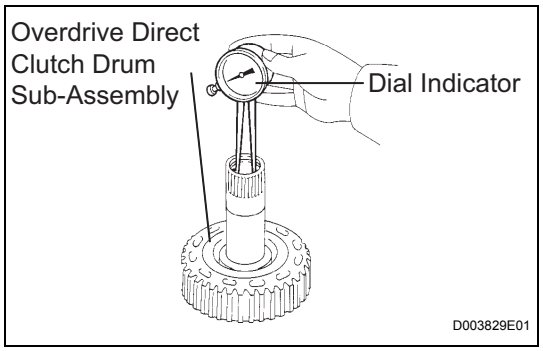

3. INSPECT OVERDRIVE DIRECT CLUTCH DRUM SUB-ASSEMBLY

(a) Using a dial indicator, measure the inside diameter of the forward clutch hub bushing.

Standard inside diameter:
23.025 to 23.046 mm (0.9065 to 0.9073 in.)
Maximum inside diameter:
23.09 mm (0.9091 in.)
NOTICE:
Check the contact surface of the bushing in the direct clutch shaft. If any scratch or discoloration is found, replace the direct clutch sub-assembly with a new one.
If the inside diameter is greater than the maximum, replace the forward clutch hub with a new one.

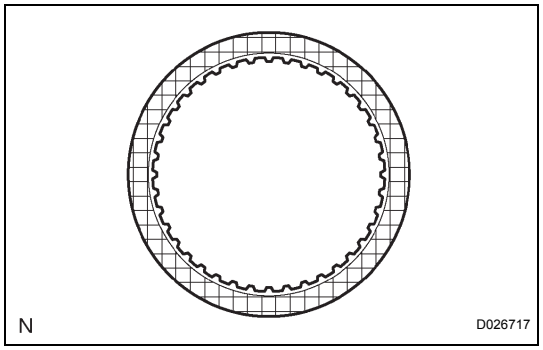

4. INSPECT 2ND BRAKE CLUTCH DISC

(a) Check if the sliding surface of the disc, plate and flange are worn or burnt.
If necessary, replace them.
NOTICE:
- **If the lining of the disc comes off or discolors, or if a part of the groove is worn, replace all discs.**
- **Before installing new discs, immerse them in ATF for at least 15 minutes.**

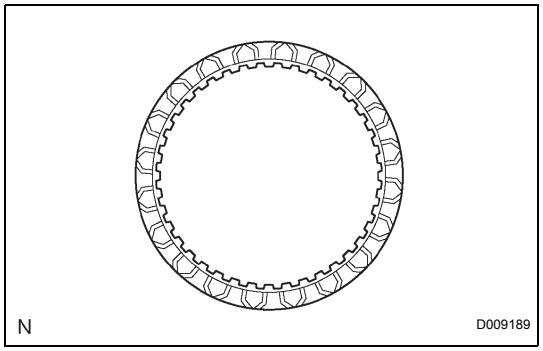

5. INSPECT 1ST AND REVERSE BRAKE CLUTCH DISC

(a) Check if the sliding surface of the disc, plate and flange are worn or burnt.
If necessary, replace them.
NOTICE:
- **If the lining of the disc comes off or discolors, or if a part of the groove is worn, replace all discs.**
- **Before installing new discs, immerse them in ATF for at least 15 minutes.**

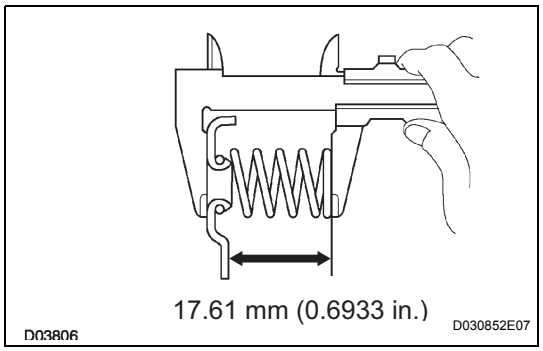

6. INSPECT 1ST AND REVERSE BRAKE RETURN SPRING SUB-ASSEMBLY

(a) Using a vernier calipers, measure the free length of the spring together with the spring seat.

Standard free length:
17.61 mm (0.6933 in.)
HINT:
If the result is not as specified, replace the spring.

AX

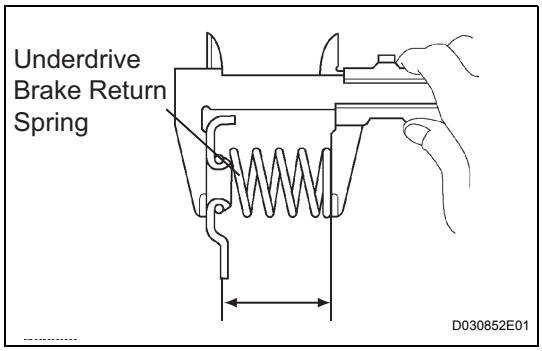

7. INSPECT UNDERDRIVE BRAKE RETURN SPRING SUB-ASSEMBLY

(a) Using a vernier calipers, measure the free length of the spring together with the spring seat.
Standard free length:
13.24 mm (0.5213 in.)
HINT:
If the result is not as specified, replace the spring.

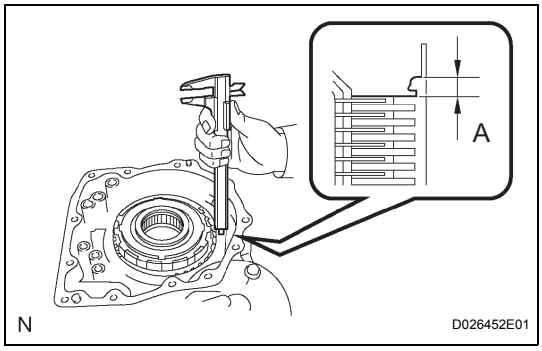

8. INSPECT PACK CLEARANCE OF 1ST AND REVERSE BRAKE

(a) Using vernier calipers, measure the distance between the disc surface and the contact surface of the 2nd brake cylinder and transaxle case (Dimension A).
(b) Select an appropriate flange so that the pack clearance will meet the specified value.
Pack clearance:
1.16 to 1.35 mm (0.0457 to 0.0531 in.)
HINT:
Piston stroke = Dimension A - Flange thickness
Flange thickness: mm (in.)

Mark	Thickness	Mark	Thickness
1	1.8 (0.071)	5	2.2 (0.087)
2	1.9 (0.075)	6	2.3 (0.091)
3	2.0 (0.079)	7	2.4 (0.094)
4	2.1 (0.083)	8	2.5 (0.098)

(c) Install the flange.

AX

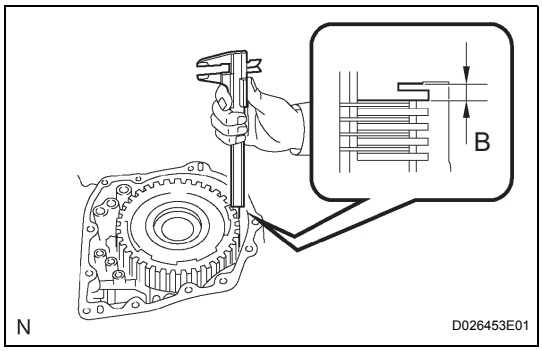

9. INSPECT PACK CLEARANCE OF 2ND BRAKE

(a) Using a vernier calipers, measure the distance between the disc surface and snap ring surface (Dimension B).
(b) Select an appropriate flange so that the pack clearance will meet the specified value.
Pack clearance:
0.62 to 0.91 mm (0.0244 to 0.0358 in.)
HINT:
Piston stroke = Dimension B - Flange thickness - Snap ring thickness 1.6 mm (0.063 in.)
Flange thickness: mm (in.)

Mark	Thickness	Mark	Thickness
1	3.0 (0.118)	5	3.4 (0.134)
2	3.1 (0.122)	6	3.5 (0.138)
3	3.2 (0.126)	7	3.6 (0.142)
4	3.3 (0.130)	8	-

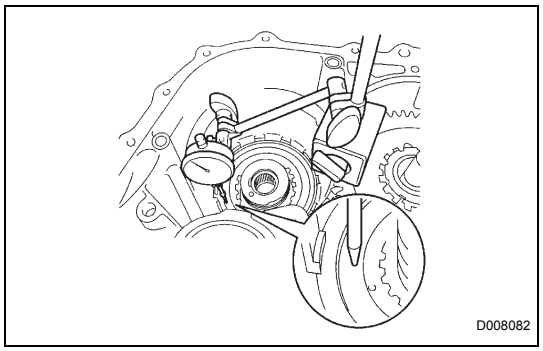

10. INSPECT PACK CLEARANCE OF UNDERDRIVE BRAKE

(a) Using a dial indicator, measure the underdrive brake pack clearance while applying and releasing compressed air (392 kPa, 4.0 kgf/cm^2, 57 psi).

Pack clearance:

1.81 to 2.20 mm (0.0713 to 0.0866 in.)

HINT:

Select an appropriate flange from the table below so that it will meet the specified value.

Flange thickness: mm (in.)

Mark	Thickness	Mark	Thickness
1	3.0 (0.118)	4	3.1 (0.122)
2	3.2 (0.126)	5	3.3 (0.130)
3	3.4 (0.134)	-	-

(b) Temporarily remove the snap ring and attach it to the flange.

(c) Reinstall the snap ring.

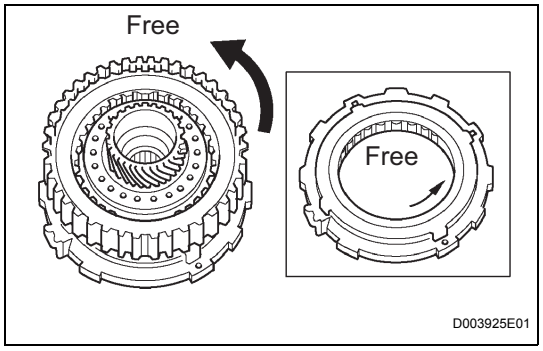

11. INSPECT UNDERDRIVE 1-WAY CLUTCH ASSEMBLY

(a) Install the underdrive clutch assembly to the 1-way clutch.

(b) Rotate the underdrive 1-way clutch assembly to check the rotating direction for the lock or free operation.

HINT:

If the result is not as specified, replace the underdrive 1-way clutch.

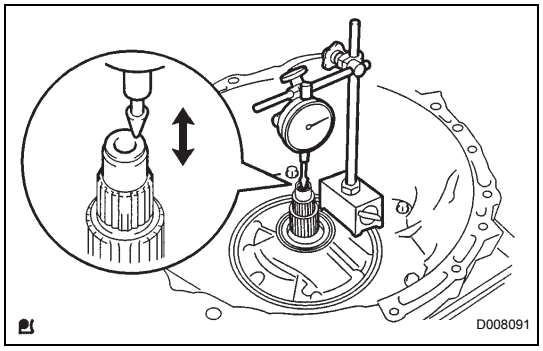

12. INSPECT INPUT SHAFT END PLAY

(a) Using a dial indicator, measure the input shaft end play.

End play:

0.262 to 1.244 mm (0.01 to 0.049 in.)

HINT:

If the result is not as specified, replace the input shaft or thrust needle roller bearing.

AX

REASSEMBLY

1. BEARING POSITION

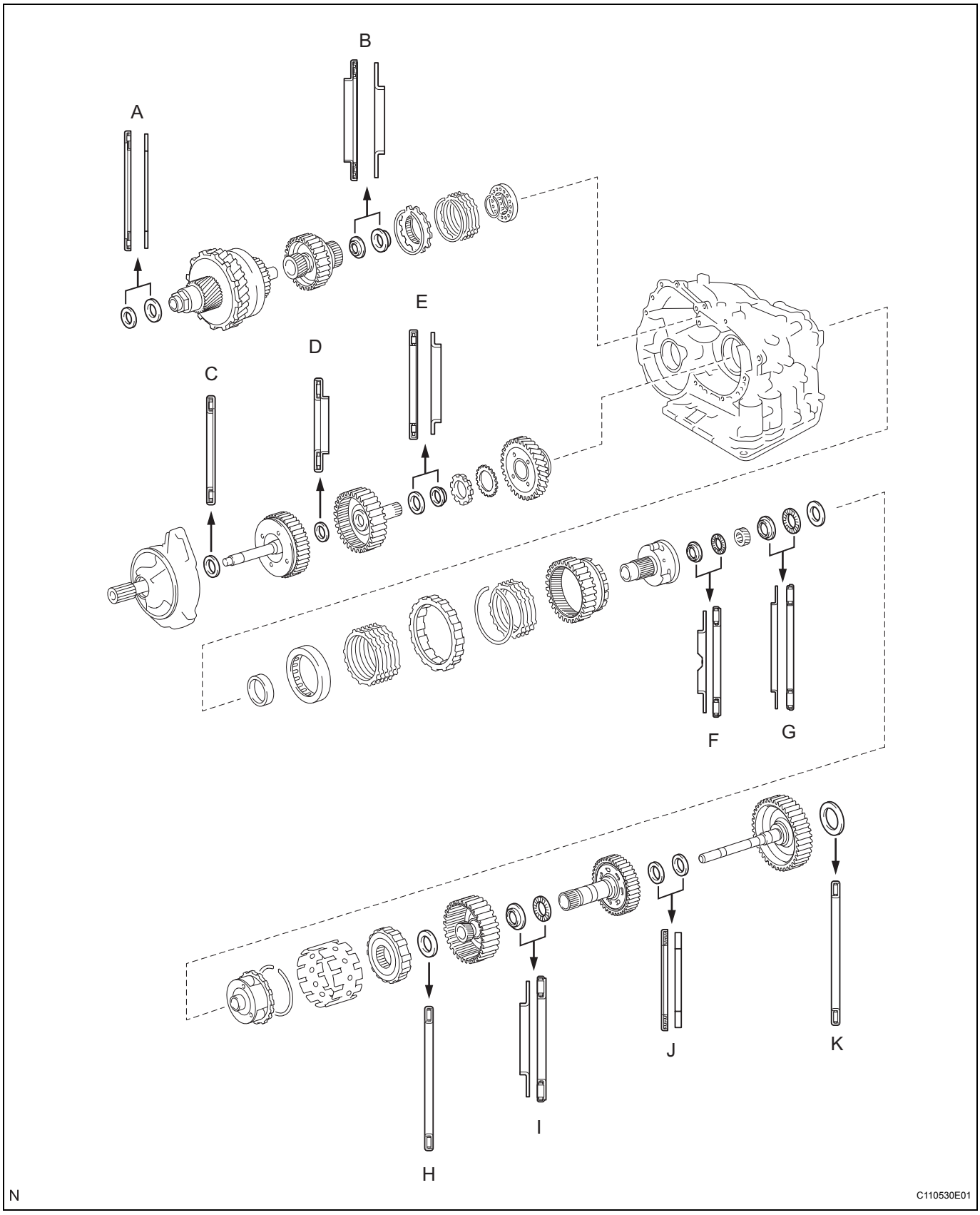

Mark	Front Race Diameter Inside / Outside mm (in.)	Thrust Bearing Diameter Inside / Outside mm (in.)	Rear Race Diameter Inside / Outside mm (in.)
A	-	57.2 (2.252) / 84.96 (3.3449)	56.4 (2.220) / 83.0 (3.268)
B	-	37.73 (1.4854) / 58.0 (2.283)	-
C	-	33.85 (1.3327) / 52.2 (2.055)	-
D	24.94 (0.982)	23.5 (0.925) / 44.0(1.732)	-
E	-	36.3 (1.429) / 51.93 (2.044)	34.5 (1.358) / 48.35 (1.904)
F	34.35 (1.352) / 56.57 (2.227)	32.45 (1.278) / 56.48 (2.223)	-
G	40.15 (1.581) / 59.25 (2.333)	38.65 (1.522) / 59.79 (2.354)	38.65 (1.522) / 59.25 (2.332)
H	-	53.6 (2.110) / 69.6 (2.740)	-
I	33.02 (1.3) / 45.8 (1.803)	31.85 (1.254) / 57.3 (2.256)	-
J	-	24.79 (0.976) / 39.5 (1.555)	23.6 (0.929) / 37.95 (1.494)
K	-	56.3 (2.216) / 75.96 (2.991)	-

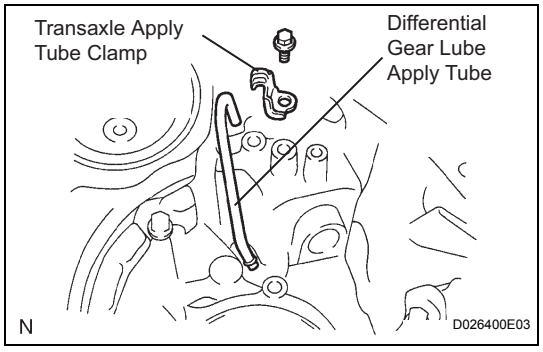

2. INSTALL DIFFERENTIAL GEAR LUBE APPLY TUBE

(a) Install the differential gear lube apply tube and transaxle apply tube clamp with the bolt to the transaxle housing.
Torque: 9.8 N*m (100 kgf*cm, 87 in.*lbf)
NOTICE:
Make sure to insert the pipe to the stopper.

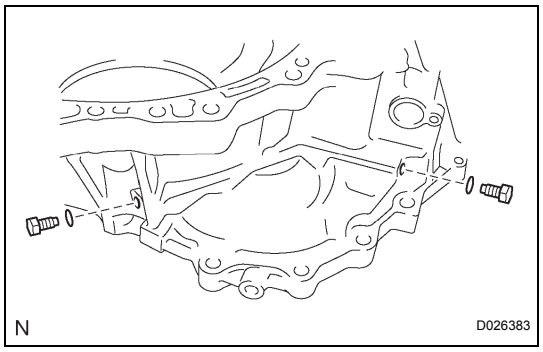

3. INSTALL TRANSAXLE CASE NO.1 PLUG

(a) Install 2 new O-rings to the 2 transaxle case No.1 plugs.
(b) Install the 2 transaxle case No.1 plugs to the transaxle rear cover.
Torque: 7.4 N*m (75 kgf*cm, 65 in.*lbf)

AX

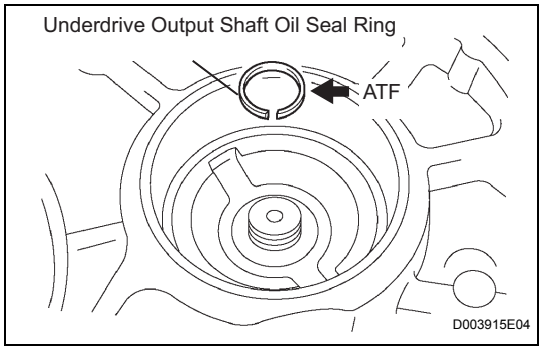

4. INSTALL UNDERDRIVE OUTPUT SHAFT OIL SEAL RING

(a) Coat a new oil seal ring with ATF and install it to the transaxle housing.

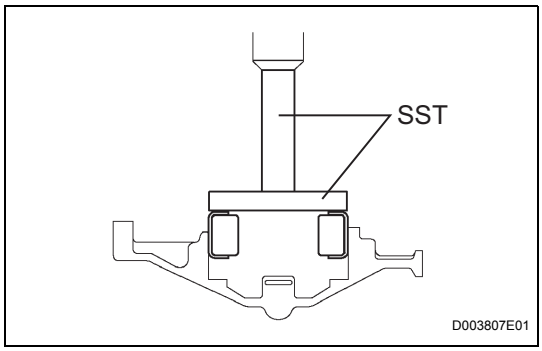

5. INSTALL UNDERDRIVE CYLINDRICAL ROLLER BEARING

(a) Coat the underdrive cylindrical roller bearing with ATF.

(b) Using SST and a press, install the underdrive cylindrical roller bearing.

SST 09950-60020 (09951-00810), 09950-70010 (09951-07100)

NOTICE:

Do not apply excessive pressure to the bearing.

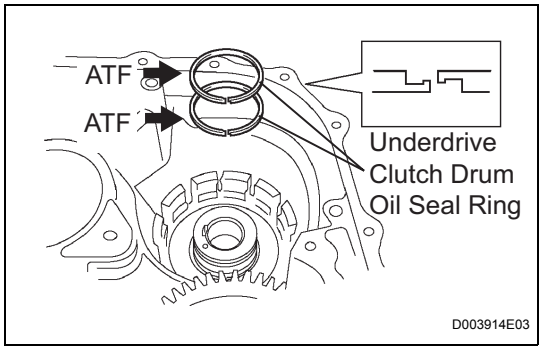

6. INSTALL UNDERDRIVE CLUTCH DRUM OIL SEAL RING

(a) Coat 2 new oil seal rings with ATF, and install them to the transaxle rear cover.

NOTICE:

- **Do not expand the end gap of the oil seal ring too much.**
- **Fix the hooks firmly. Confirm that the oil seal ring rotates freely in its groove.**

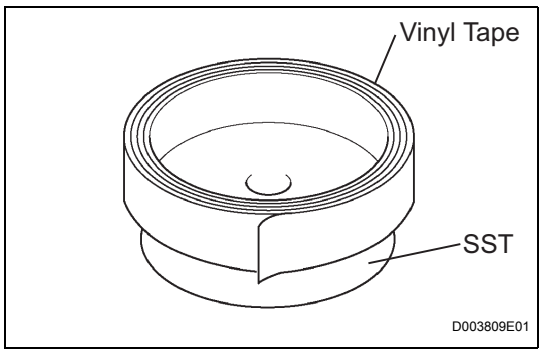

7. INSTALL NEEDLE ROLLER BEARING

(a) Wrap vinyl tape around the SST 4.0 mm (0.157 in.) from the bottom of the SST until the thickness of the tape is about 5.0 mm (0.197 in.).

SST 09950-60010 (09951-00320), 09950-70010 (09951-07100)

NOTICE:

Clean SST to remove deposited oil, before wrapping vinyl tape.

(b) Coat the needle roller bearing with ATF.

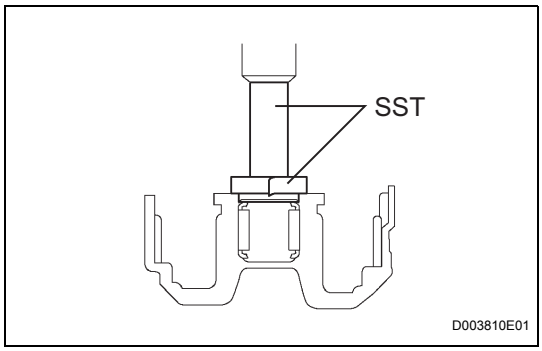

(c) Using SST and a press, install the needle-roller bearing to the transaxle case.

SST 09950-60010 (09951-00320), 09950-70010 (09951-07100)

NOTICE:

When the wrapped vinyl tape contacts the transaxle case, stop press-fitting.

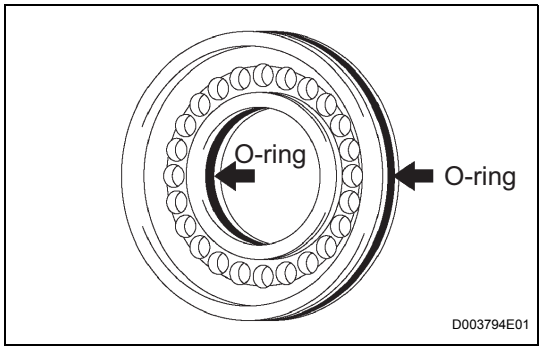

8. INSTALL UNDERDRIVE BRAKE PISTON

(a) Coat 2 new O-rings with ATF, and install them to the underdrive brake piston.

NOTICE:

- **Make sure that the O-rings are not twisted or pinched when they are installed.**
- **Apply sufficient ATF to the O-ring before installing.**

(b) Coat the underdrive brake piston with ATF.

AX

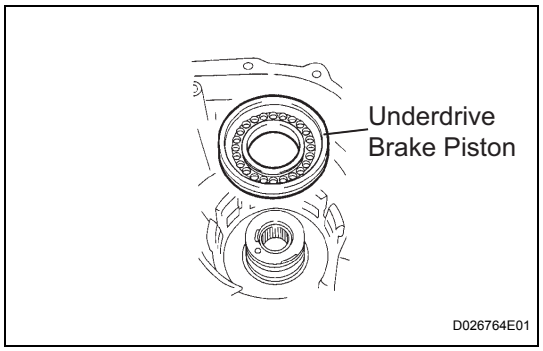

(c) Install the underdrive brake piston to the transaxle case.
NOTICE:
Be careful not to damage the O-ring.

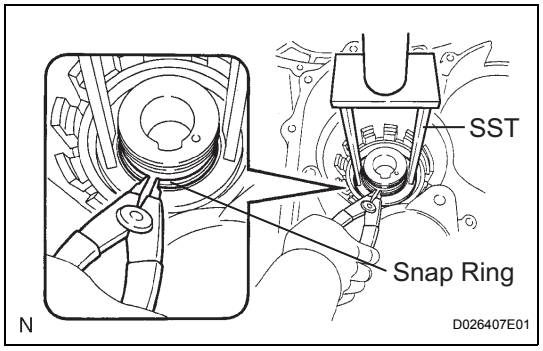

9. INSTALL UNDERDRIVE BRAKE RETURN SPRING SUB-ASSEMBLY

(a) Place SST on the return spring and compress the return spring with a press.
SST 09387-00020

(b) Using a snap ring expander, install the snap ring to the transaxle case.
NOTICE:
- **Stop the press when the spring seat is lowered 1 to 2 mm (0.039 to 0.078 in.) from the snap ring groove, to prevent the spring seat from being deformed.**
- **Do not expand the snap ring excessively.**
- **Installing the spring sub-assembly, check that all of the springs are fit in the piston correctly.**
- **The snap ring should be fully engaged in the groove of the transaxle case.**

10. INSTALL BREATHER PLUG NO.2 (ATM)

11. INSTALL COUNTER DRIVE GEAR BEARING

(a) Coat the counterdrive gear bearing with ATF.

(b) Using SST and a press, install the bearing outer race.
SST 09950-60020 (09951-01030), 09950-70010 (09951-07150), 09649-17010
NOTICE:
- **Do not apply excessive pressure to the bearing.**
- **Press-fit the bearing outer race until it contacts the transaxle case.**

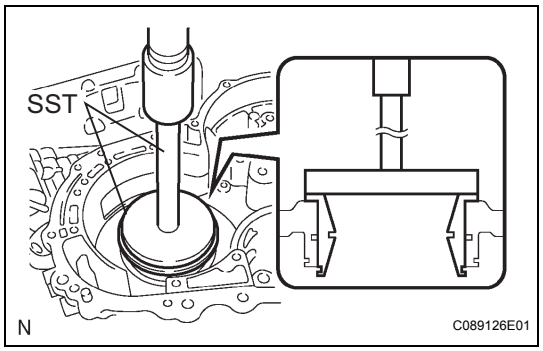

(c) Using a snap ring expander, install the snap ring.
NOTICE:
The white mark side of the snap ring should face upward.

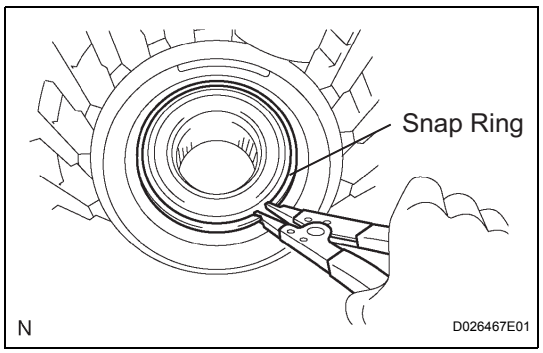

AX

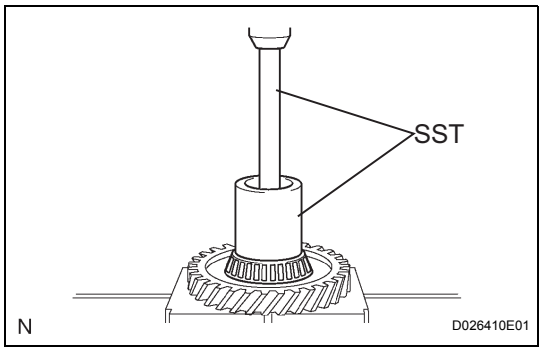

12. INSTALL COUNTER DRIVE GEAR

(a) Coat the couterdrive gear with ATF.

(b) Using SST and a press, install the tapered roller bearing to the counter drive gear.

SST 09950-70010 (09951-07150), 09649-17010

NOTICE:

Do not apply excessive pressure to the bearing.

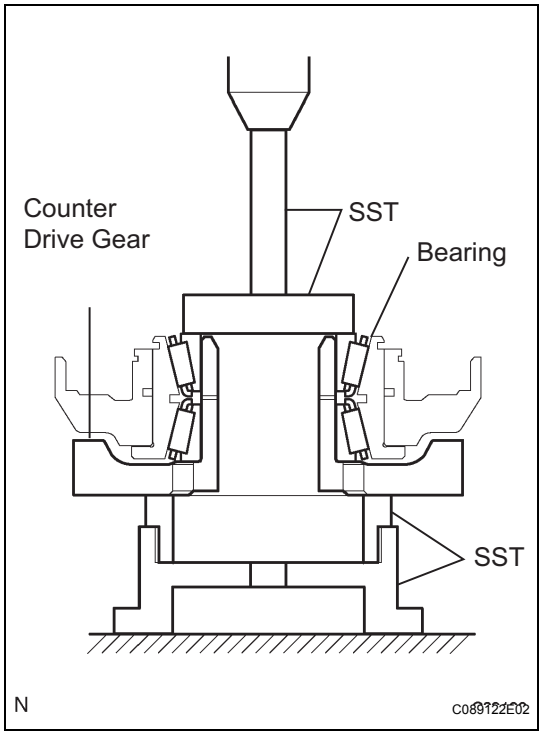

(c) Using SST and a press, install the counter drive gear and bearing to the transaxle case.

SST 09950-70010 (09951-07150), 09223-15030, 09527-17011, 09950-60020 (09951-00750)

NOTICE:

Do not apply excessive pressure to the counter drive gear.

AX

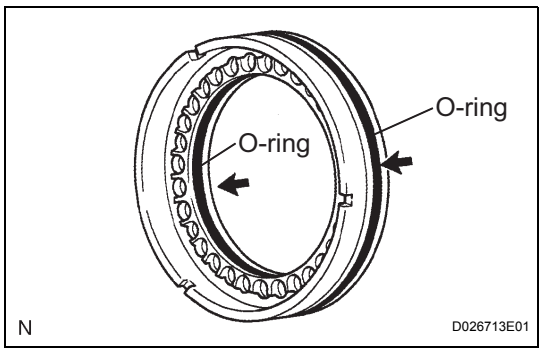

13. INSTALL 1ST AND REVERSE BRAKE PISTON

(a) Coat 2 new O-rings with ATF.

(b) Install the 2 O-rings to the 1st and reverse brake piston.

NOTICE:

- **Make sure that the O-rings are not twisted or pinched when they are installed.**
- **Apply sufficient ATF to the O-ring prior to assembling.**

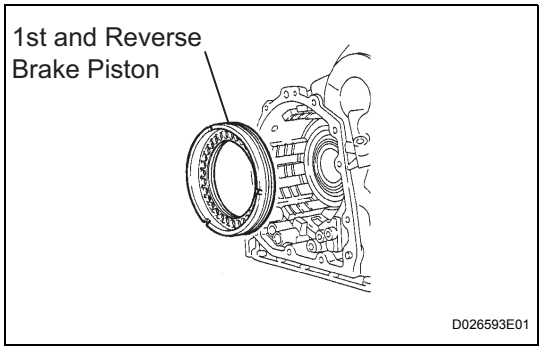

(c) Coat the 1st and reverse brake piston with ATF, and install it to the transaxle case.

NOTICE:

Be careful not to damage the O-ring.

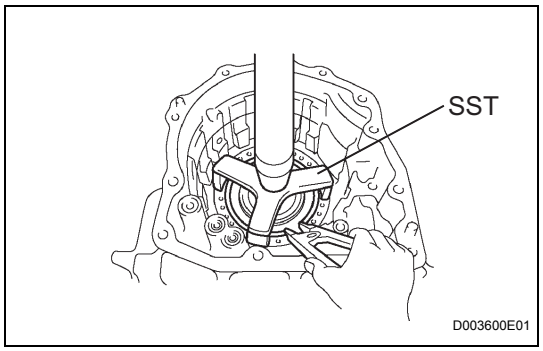

14. INSTALL 1ST AND REVERSE BRAKE RETURN SPRING SUB-ASSEMBLY

(a) Place SST on the return spring and compress the return spring with a press.
SST 09387-00070

(b) Using a snap ring expander, install the snap ring to the transaxle case.
NOTICE:
- **Stop the press when the spring seat is lowered to the place 1 to 2 mm (0.039 to 0.078 in.) from the snap ring groove, preventing the spring seat from being deformed.**
- **Do not expand the snap ring excessively.**
- **Installing the spring sub-assembly, check that all of the springs are fit in the piston correctly.**
- **The snap ring should be fully engaged in the groove of the cylinder.**
- **Fix the snap ring to the inside of the claw of the spring seat firmly.**

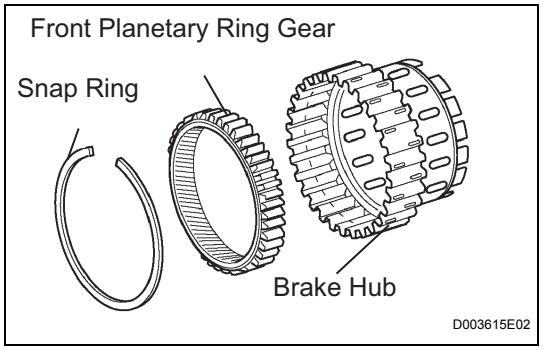

15. INSTALL FRONT PLANETARY RING GEAR

(a) Using a screwdriver, install the front planetary ring gear and snap ring to the brake hub.
NOTICE:
Confirm that the snap ring is engaged in the groove of the brake hub correctly.

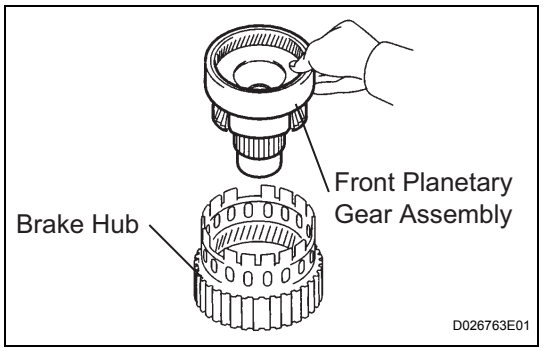

16. INSTALL FRONT PLANETARY GEAR ASSEMBLY

(a) Install the front planetary gear assembly to the brake hub.

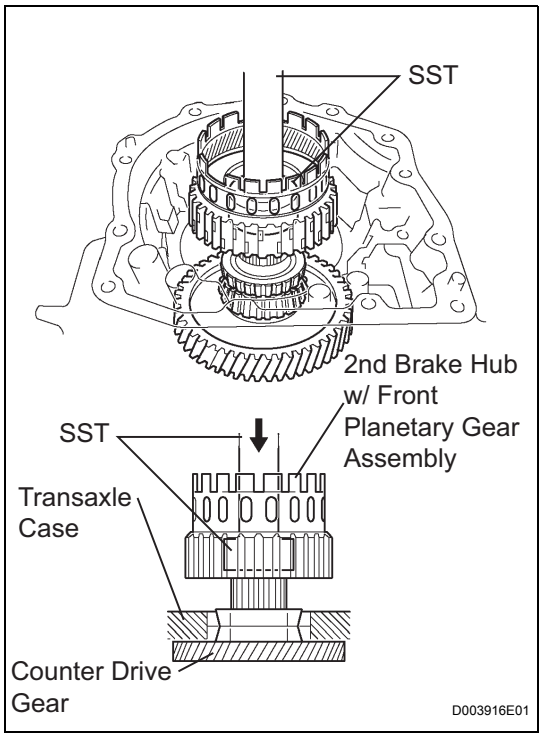

(b) Using SST and a press, press-fit the front planetary gear assembly.
SST 09950-60010 (09951-00500), 09950-70010 (09951-07100)
NOTICE:
- **Do not apply excessive pressure to the planetary gear assembly.**
- **Press the inner race of LH tapered roller bearing, counter gear and front planetary gear assembly to the position where no pre-load should be applied to one pair of tapered roller bearings (left and right).**

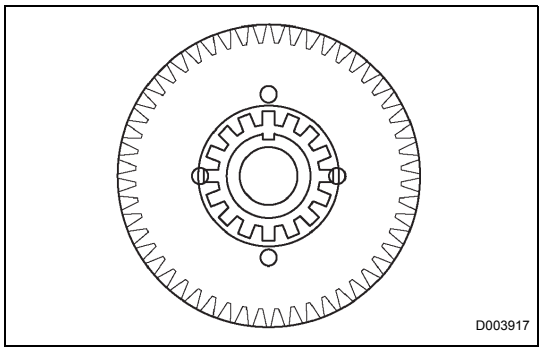

(c) Install a new washer as shown in the illustration.

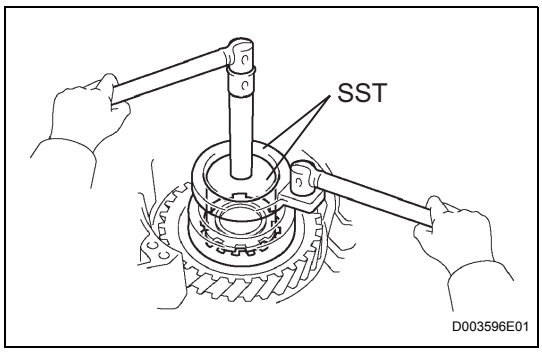

(d) Using SST, install the nut.
SST 09387-00030, 09387-00080
Torque: 280 N*m (3,355 kgf*cm, 207 ft.*lbf)
NOTICE:
Assemble the washer after pressing each part, then tighten the nut to the minimum tightening torque.

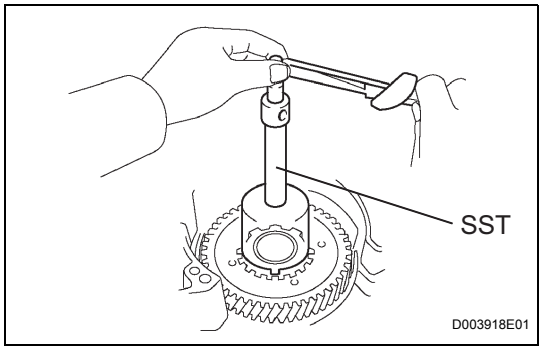

(e) Using SST and a torque wrench, measure the turning torque of the bearing while rotating SST at 60 rpm. When the measured value is not as specified, gradually tighten the nut until it reaches the specified value.
SST 09387-00080
Standard:
Turning torque at 60 rpm
Bearing:
New Bearing:

0.51 to 1.02 N*m (5.1 to 10.0 kgf*cm, 4.4 to 8.7 in.*lbf)

Used Bearing:

0.26 to 0.51 N*m (2.7 to 5.2 kgf*cm, 2.3 to 4.5 in.*lbf)

HINT:

Use a torque wrench with a fulcrum length of 160 mm (6.3 in.).

(f) Tighten the nut gradually until the specified turning torque of tapered roller bearing is measured.
Torque: 350 N*m (3,569 kgf*cm, 258 ft.*lbf)

(g) Using a chisel and hammer, stake the front lock washer.

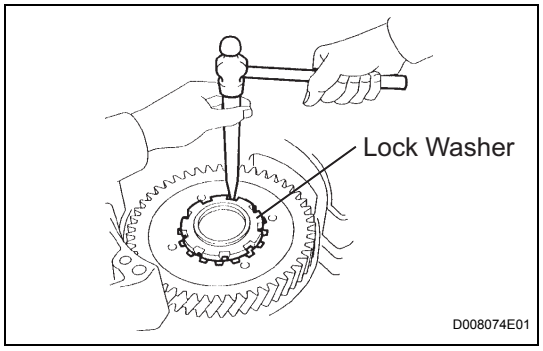

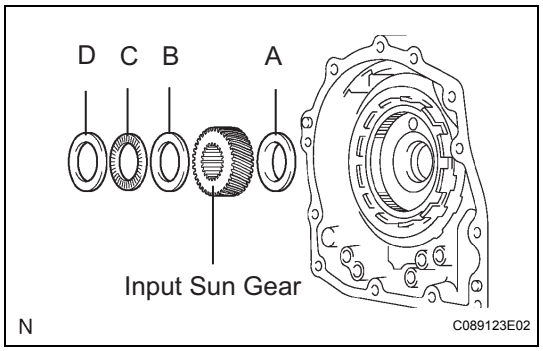

17. INSTALL INPUT SUN GEAR

(a) Coat the 2 thrust bearings with ATF.

(b) Install the 2 thrust bearings, the bearing race and the input sun gear to the front planetary gear assembly.

NOTICE:

- **Install the bearing race on the side of the front planetary carrier. Be careful about the direction of the race.**
- **Installing thrust bearing and front sun gears, be careful about the direction of the parts.**
- **Install the bearing race on the side of the front sun gear. Be careful about the direction of the race.**
- **Install the thrust bearing and the race after holding the parts on the input sun gear by applying grease. Make sure that the assembling order is correct.**

Thrust bearing and bearing race diameter: mm (in.)

	Inside	Outside
Thrust Bearing, A	32.5 (1.28)	56.5 (2.224)
Bearing Race, B	40.2 (1.583)	59.3 (2.335)
Thrust Bearing, C	38.6 (1.520)	59.7 (2.35)
Bearing Race, D	38.6 (1.520)	59.3 (2.335)

AX

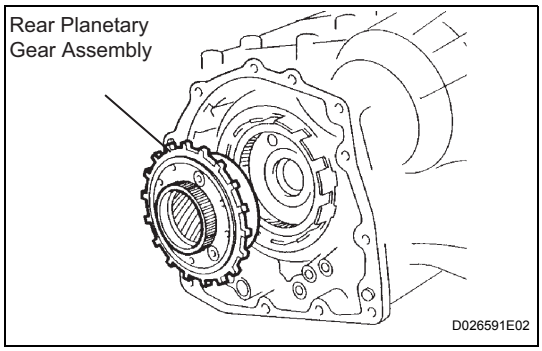

18. INSTALL REAR PLANETARY GEAR ASSEMBLY

(a) Install the rear planetary gear assembly to the rear planetary ring gear.

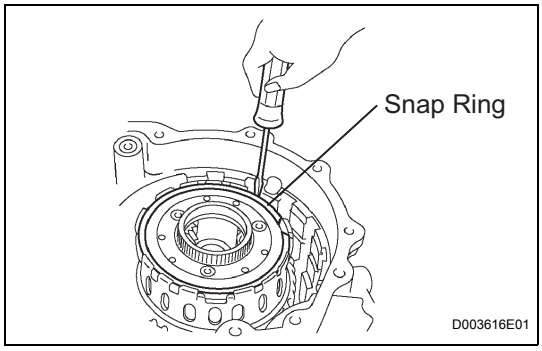

(b) Using a screwdriver, install the snap ring.
NOTICE:
Confirm that the snap ring is fixed in the groove of the 1st and reverse brake hub correctly.

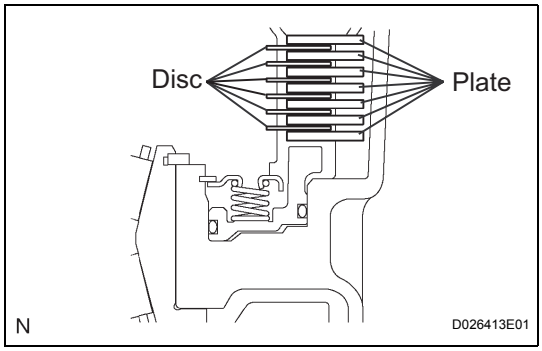

19. INSTALL 1ST AND REVERSE BRAKE CLUTCH DISC

(a) Coat the 6 discs with ATF.
(b) Install the 7 plates and 6 discs.
NOTICE:
Make sure that the plates, discs, and flange are installed as shown in the illustration.

AX

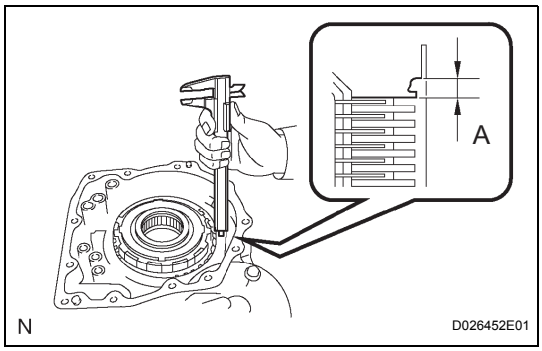

20. INSPECT PACK CLEARANCE OF FIRST AND REVERSE BRAKE

(a) Using vernier calipers, measure the distance between the disc surface and the contact surface of the 2nd brake cylinder and transaxle case (Dimension A).
(b) Select an appropriate flange so that the pack clearance will meet the specified value.
Pack clearance:
1.16 to 1.35 mm (0.0457 to 0.0531 in.)
HINT:
Piston stroke = Dimension A - Flange thickness
Flange thickness: mm (in.)

Mark	Thickness	Mark	Thickness
1	1.8 (0.071)	5	2.2 (0.087)
2	1.9 (0.075)	6	2.3 (0.091)
3	2.0 (0.079)	7	2.4 (0.094)
4	2.1 (0.083)	8	2.5 (0.098)

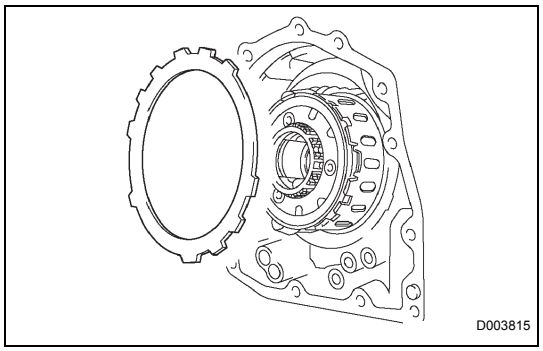

(c) Install the flange.

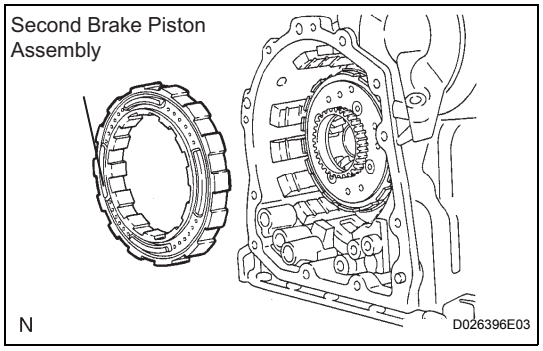

21. INSTALL SECOND BRAKE PISTON ASSEMBLY

(a) Install the second brake piston assembly to the transaxle case.

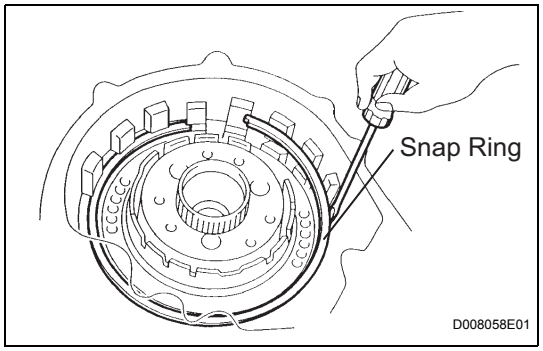

(b) Install the snap ring and measure the inside diameter.

Inside diameter:

Greater than 167 mm (6.57 in.)

NOTICE:

- **Make sure that the taper snap ring is installed in the correct direction.**
- **When the diameter does not meet the specified value, replace the snap ring with a new one.**
- **After installing, confirm that there is no clearance between the 2nd brake cylinder and the fitting surface of the cylinder in the transaxle case.**

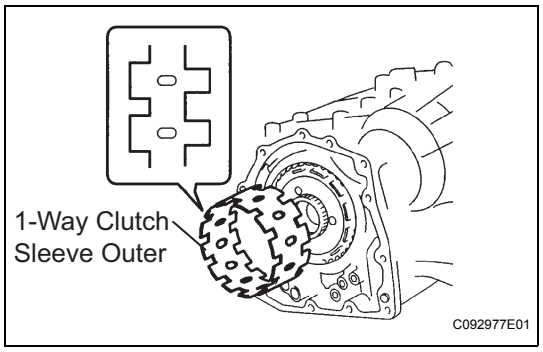

22. INSTALL 1-WAY CLUTCH SLEEVE OUTER

(a) Install the 1-way clutch sleeve outer to the 2nd brake cylinder assembly.

NOTICE:

Make sure that the outer sleeve is installed in the correct direction.

AX

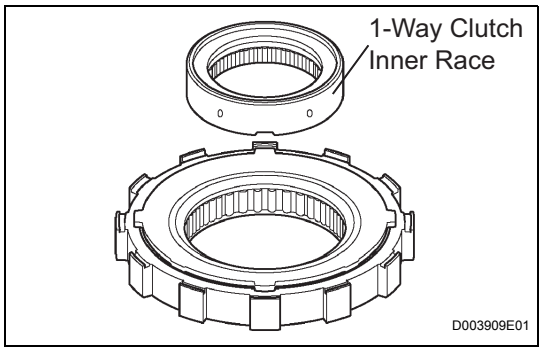

23. INSTALL 1-WAY CLUTCH ASSEMBLY

(a) Install the 1-way clutch inner race to the 1-way clutch.

NOTICE:

- **Make sure that the inner race is installed in the correct direction.**
- **Confirm that the discrimination mark is visible.**

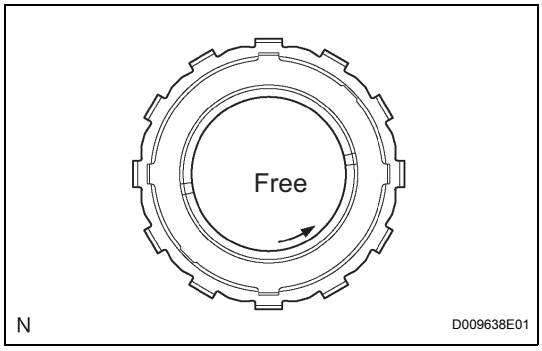

(b) Check the rotating direction of 1-way clutch for the lock or free operation as shown in the illustration.

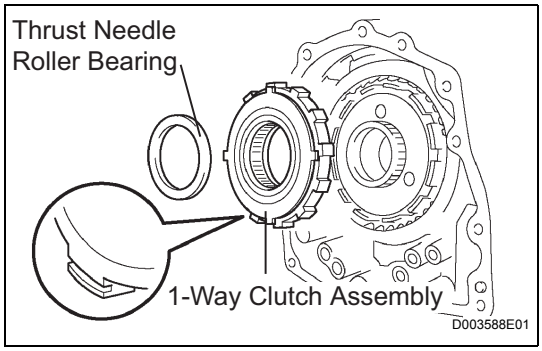

(c) Install the 1-way clutch and thrust needle roller bearing to the 1-way clutch sleeve outer.

Bearing diameter: mm (in.)

	Inside	Outside
Bearing	53.6 (2.110)	69.4 (2.732)

NOTICE:

Install the thrust bearing properly so that no-colored race will be visible.

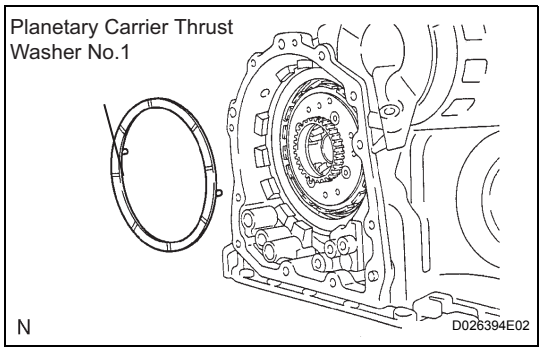

24. INSTALL PLANETARY CARRIER THRUST WASHER NO.1

(a) Coat the planetary carrier thrust washer No.1 with yellow petrolatum, and install the washer onto the planetary sun gear assembly.

NOTICE:

After installing, confirm that the projection should be fixed firmly in the hole of the planetary sun gear assembly.

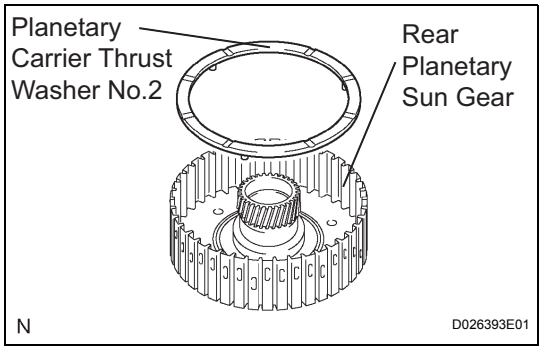

25. REMOVE REAR PLANETARY SUN GEAR ASSEMBLY

(a) Coat the planetary carrier thrust washer No.2 with yellow petrolatum, and install the washer onto the rear planetary sun gear.

AX

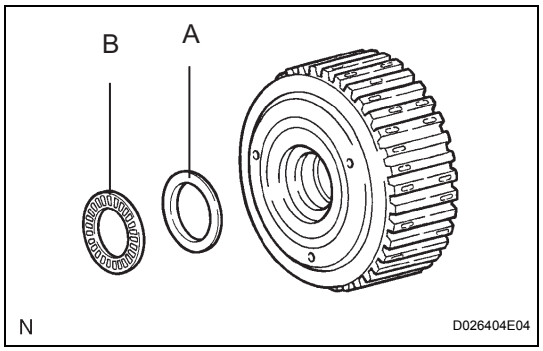

(b) Coat the bearing with yellow petrolatum, and install the bearing onto the rear planetary sun gear.
Bearing diameter: mm (in.)

	Inside	Outside
Race, A	33.0 (1.299)	45.4 (1.787)
Bearing, B	31.85 (1.254)	45.2 (1.78)

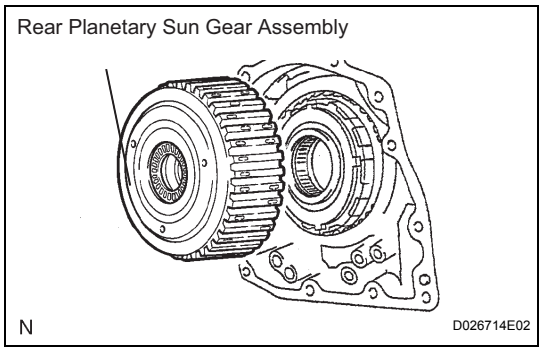

(c) Install the rear planetary sun gear assembly to the rear planetary gear.
NOTICE:
Installing the rear planetary sun gear assembly, make sure that the B1 discs are engaged.

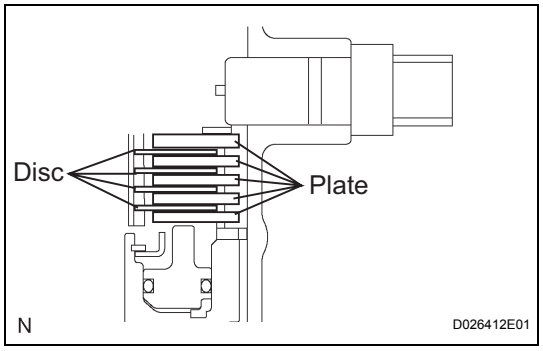

26. INSTALL 2ND BRAKE CLUTCH DISC
(a) Coat the 4 discs with ATF.
(b) Install the 4 discs and 5 plates to the transaxle case.
(c) Temporarily install the snap ring.

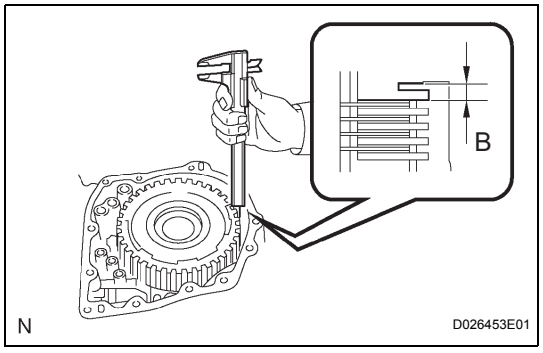

27. INSPECT PACK CLEARANCE OF 2ND BRAKE
(a) Using a vernier calipers, measure the distance between the disc surface and snap ring surface (Dimension B).
(b) Select an appropriate flange so that the pack clearance will meet the specified value.
Clearance:
0.62 to 0.91 mm (0.0244 to 0.0358 in.)
HINT:
Piston stroke = Dimension B - Flange thickness - Snap ring thickness 1.6 mm (0.063 in.)
Flange thickness: mm (in.)

Mark	Thickness	Mark	Thickness
1	3.0 (0.118)	5	3.4 (0.134)
2	3.1 (0.122)	6	3.5 (0.138)
3	3.2 (0.126)	7	3.6 (0.142)
4	3.3 (0.130)	8	-

AX

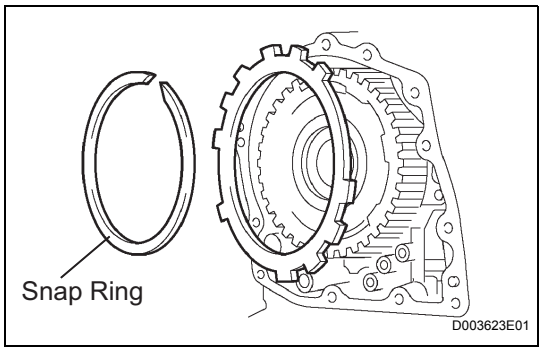

(c) Temporarily remove the snap ring, attach the selected flange and reinstall the snap ring.
NOTICE:
Secure the snap ring so that the ends visible through the groove of the transaxle case.

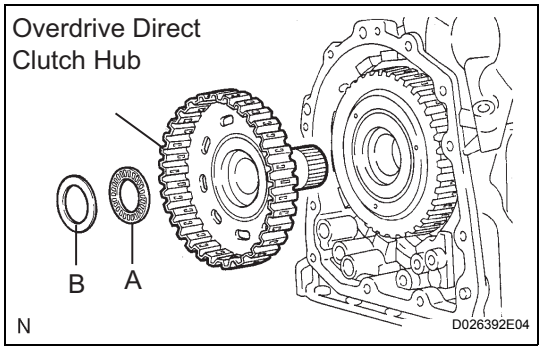

28. INSTALL OVERDRIVE DIRECT CLUTCH HUB SUB-ASSEMBLY

(a) Install the direct clutch hub to the planetary gear assembly.
NOTICE:
Be careful not to damage the bushing inside the overdrive clutch hub during installation.

(b) Coat the thrust bearing with ATF.

(c) Install the bearing race and the thrust bearing to the direct clutch hub.
NOTICE:
Be careful not to drop the bearing when it is installed.
Bearing and race diameter: mm (in.)

	Inside	Outside
Bearing, A	24.7 (0.972)	39.5 (1.555)
Race, B	23.6 (0.929)	38.0 (1.496)

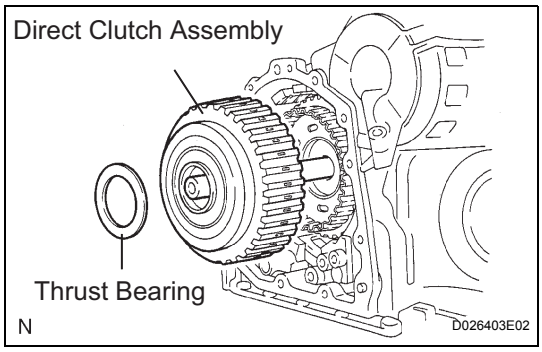

29. INSTALL DIRECT CLUTCH ASSEMBLY

(a) Coat the thrust bearing with ATF.

(b) Install the direct clutch assembly and thrust bearing to the rear planetary sun gear assembly.
NOTICE:
The disc in the direct clutch should completely match with the hub attached outside the rear planetary sun gear. Otherwise, the rear cover cannot be installed.

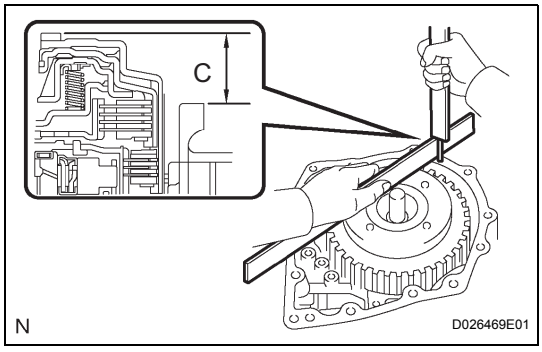

(c) Clean the connecting part of the transaxle case and the rear cover.

(d) As shown in the illustration, place a straightedge on the direct clutch drum and measure the distance between the transaxle case and the straightedge using vernier calipers (Dimension C).

AX

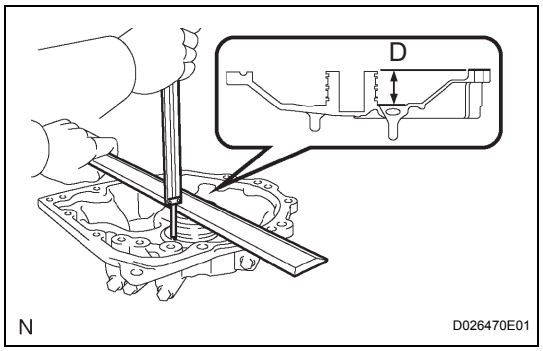

(e) Using vernier calipers and a straightedge, measure the dimension shown in the illustration.

(f) Calculate the end play value using the following formula. Select a thrust bearing which satisfies the end play value and install the selected bearing.

End play:

0.244 to 0.901 mm (0.0096 to 0.0355 in.)

NOTICE:

Make sure that the no-colored race side is facing the direct clutch assembly.

HINT:

End play = Dimension D - Dimension C

Bearing thickness and diameter : mm (in.)

Thickness	Inside	Outside
3.6 (0.1417)	56.3 (2.217)	75.7 (2.980)
3.8 (0.1496)	56.3 (2.217)	75.7 (2.980)

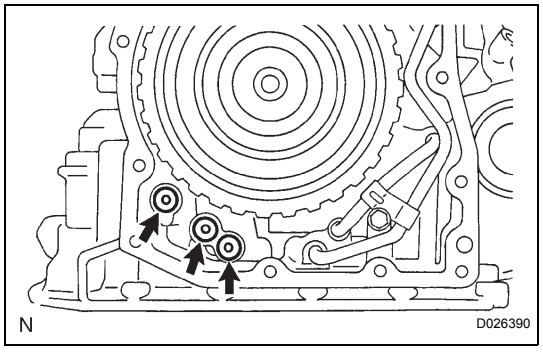

30. INSTALL GOVERNOR APPLY GASKET NO.1

(a) Install 3 new governor apply gaskets No.1 to the transaxle case.

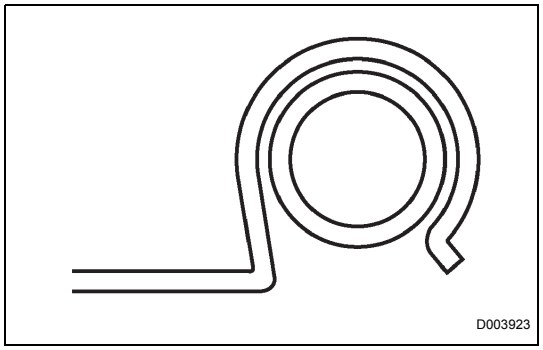

31. INSTALL BRAKE APPLY TUBE

(a) Install the clamp to the brake apply tube.

NOTICE:

Make sure to install the clamp to the apply tube before installing the apply tube to the transaxle case. This prevents the apply tube from being deformed or damaged.

(b) Install the clutch apply tube.

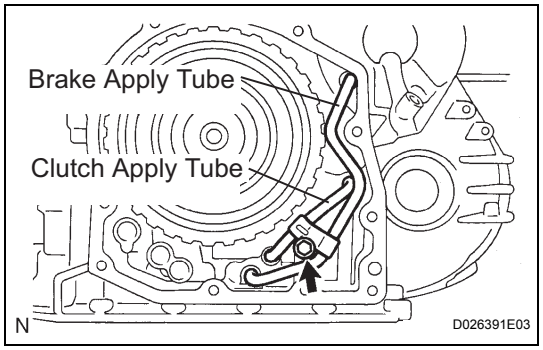

(c) Install the brake apply tube and a bolt to the transaxle case.

Torque: 5.4 N*m (55 kgf*cm, 48 in.*lbf)

NOTICE:

The tube should be securely inserted until it reaches the stopper.

AX

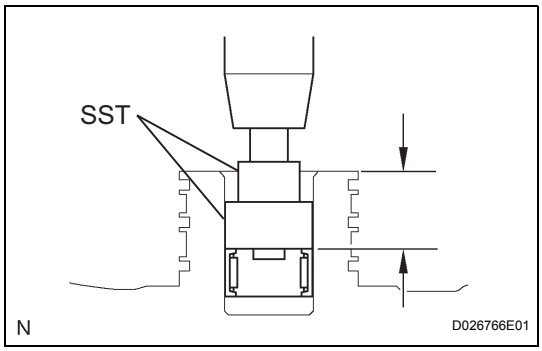

32. INSTALL NEEDLE ROLLER BEARING

(a) Using SST and a press, press the needle roller bearing into the transaxle rear cover.

SST 09950-60010 (09951-00230, 09952-06010)

Press fit depth:

20.55 to 21.25 mm (0.8091 to 0.8366 in.)

NOTICE:

- **The engraved mark side of the bearing should face upward.**
- **Repeat the press fit until the specified value is obtained.**

(b) Coat a needle roller bearing with ATF.

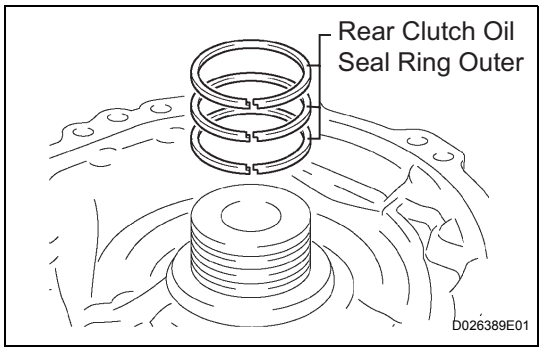

33. INSTALL REAR CLUTCH OIL SEAL RING OUTER

(a) Coat 3 new rear clutch oil seal rings with ATF, install them to the transaxle rear cover.

NOTICE:

The snap ring should be fully engaged in the groove of the drum.

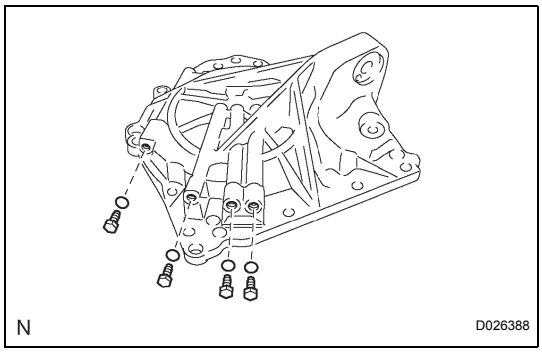

34. INSTALL TRANSAXLE CASE NO.1 PLUG

(a) Coat 4 new O-rings with ATF.

(b) Install the 4 O-rings to the 4 transaxle case No.1 plugs.

(c) Install the 4 transaxle case No.1 plugs to the transaxle rear cover.

Torque: 7.4 N*m (75 kgf*cm, 65 in.*lbf)

AX

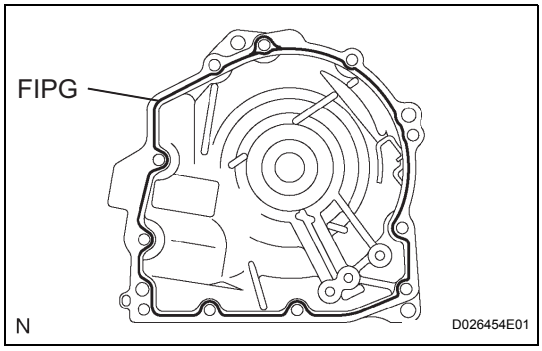

35. INSTALL TRANSAXLE REAR COVER SUB-ASSEMBLY

(a) Remove any packing material and be careful not to spill oil on the contact surfaces of the transaxle rear cover or the transaxle case.

(b) Apply FIPG to the cover.

FIPG:

Part No. 08826-00090, THREE BOND 1281 or equivalent.

NOTICE:

Make sure that the FIPG is applied in a bead (section diameter: ϕ1.2) so that the entire sealing surface will be evenly sealed. The FIPG should also protrude slightly from the flange after the assembly of the parts has been completed.

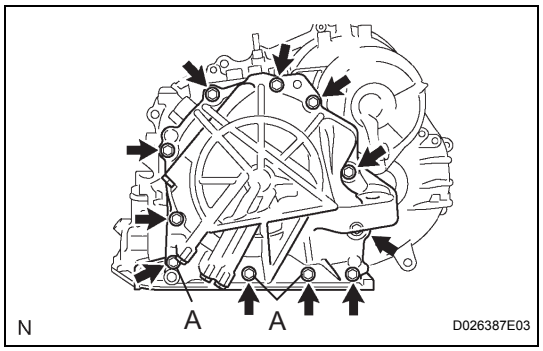

(c) Apply liquid sealer to the "A" bolt threads.
Sealant:
Part No. 08833-00080, THREE BOND 1344, LOCTITE 242 or equivalent.

(d) Install the 11 bolts.
Torque: Bolt A
19 N*m (190 kgf*cm, 14 ft.*lbf)
Other bolts:
25 N*m (250 kgf*cm, 18 ft.*lbf)

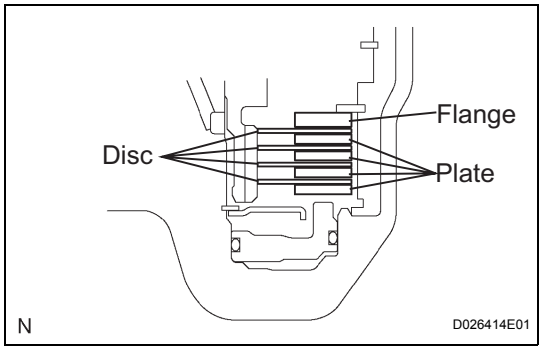

36. INSTALL UNDERDRIVE CLUTCH DISC NO.2

(a) Coat the 4 discs with ATF.

(b) Install the 4 discs, 4 plates and flange to the transaxle case.
NOTICE:
Be careful about the order of discs, plate and flange assembly.

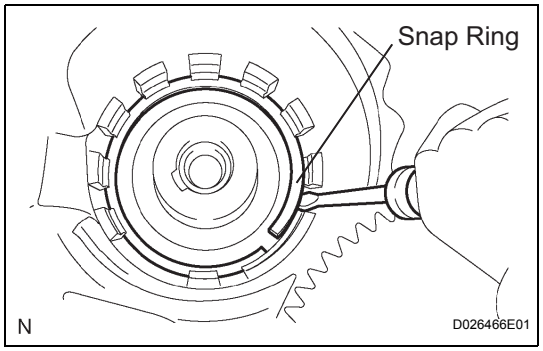

(c) Using a screwdriver, install the snap ring.
NOTICE:
The snap ring should be fully engaged in the groove of the drum.

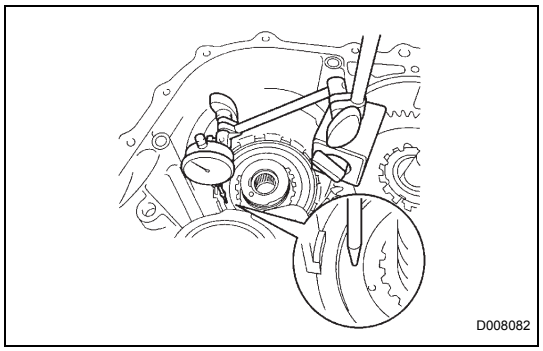

37. INSPECT PACK CLEARANCE OF UNDERDRIVE BRAKE

(a) Using a dial indicator, measure the underdrive brake pack clearance while applying and releasing compressed air (392 kPa, 4.0 kgf/cm ^{2}, 57 psi).
Pack clearance:
1.81 to 2.20 mm (0.0713 to 0.0866 in.)
HINT:
Select an appropriate flange from the table below so that it will meet the specified value.
Flange thickness: mm (in.)

Mark	Thickness	Mark	Thickness
1	3.0 (0.118)	4	3.1 (0.122)
2	3.2 (0.126)	5	3.3 (0.130)
3	3.4 (0.134)	-	-

(b) Temporarily remove the snap ring and attach it to the flange.

(c) Reinstall the snap ring.

AX

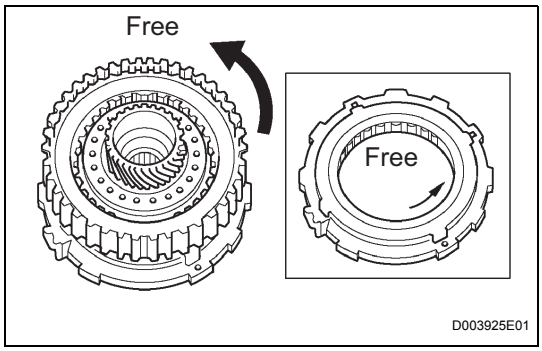

38. INSPECT UNDERDRIVE 1-WAY CLUTCH ASSEMBLY

(a) Install the underdrive clutch assembly to the 1-way clutch.

(b) Rotate the underdrive clutch assembly to check the rotating direction for the lock or free operation.

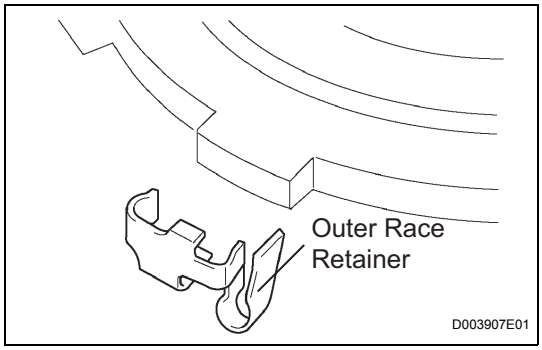

39. INSTALL UNDERDRIVE 1-WAY CLUTCH ASSEMBLY

(a) Install the outer race retainer to the 1-way clutch.
NOTICE:
Fix the outer race retainer to the external tooth of the 1-way clutch firmly.

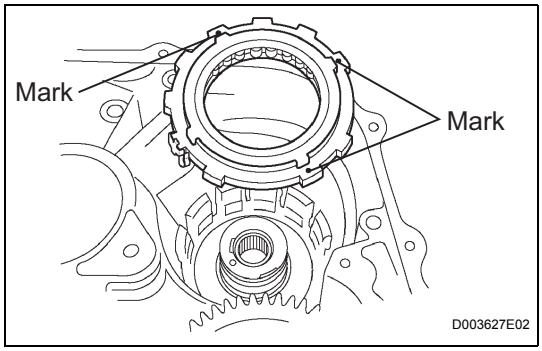

(b) Install the 1-way clutch to the transaxle case.
NOTICE:
Make sure that the mark on the 1-way clutch outer race is visible.

AX

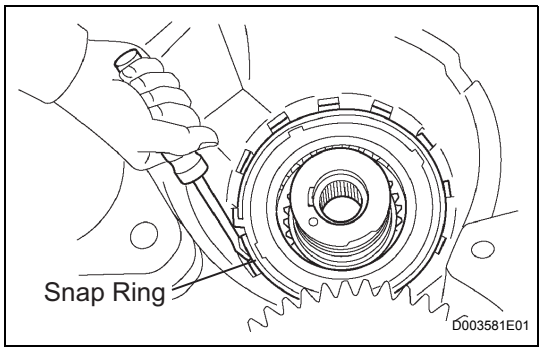

(c) Using a screwdriver, install the snap ring to the transaxle case.
NOTICE:
The snap ring should be fixed fully engaged in the groove of the transaxle case.

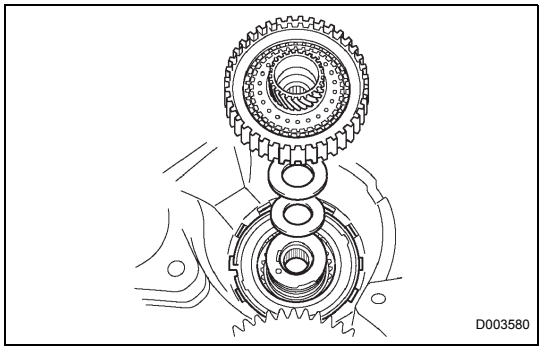

40. INSTALL UNDERDRIVE CLUTCH ASSEMBLY

(a) Coat the bearing and bearing race with petroleum jelly, install them onto the underdrive clutch.
Bearing and bearing race diameter: mm (in.)

	Inside	Outside
Bearing	37.73 (1.4854)	58.0 (2.2835)
Race	29.9 (1.1772)	55.5 (2.185)

(b) Install the underdrive clutch assembly to the transaxle case.
NOTICE:
Do not damage the oil seal when installing the underdrive clutch drum sub-assembly.

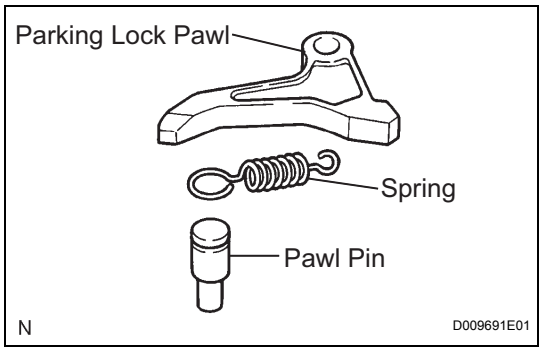

41. INSTALL PARKING LOCK PAWL

(a) Install the pawl pin and spring to the parking lock pawl.

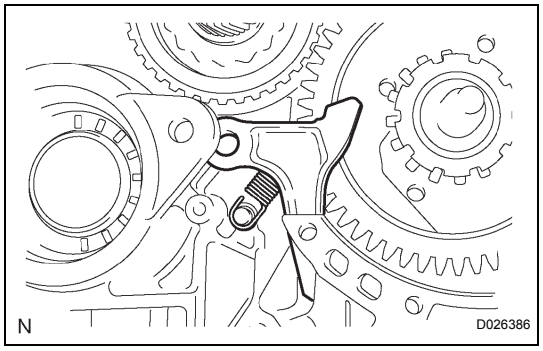

(b) Temporarily install the parking lock pawl, shaft and spring to the transaxle case, as shown in the illustration.

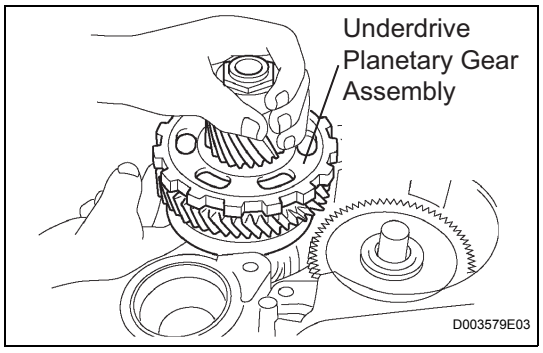

42. INSTALL UNDERDRIVE PLANETARY GEAR ASSEMBLY

(a) Install the underdrive planetary gear assembly to the transaxle case.
NOTICE:
Fully engage all the discs of underdrive clutch and hub splines of the underdrive planetary gear assembly and install them securely.

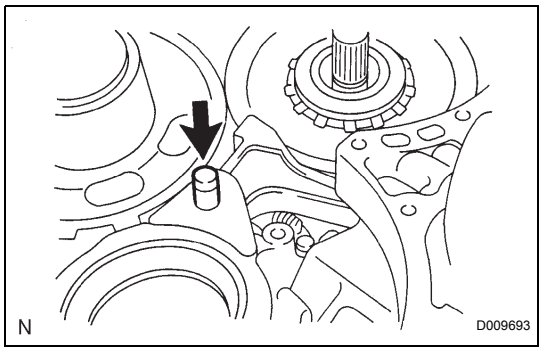

(b) Install the parking lock pawl shaft.

AX

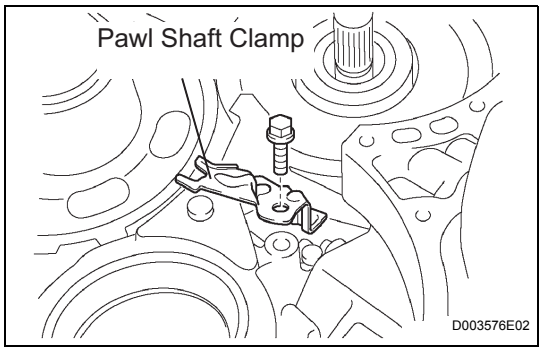

(c) Install the pawl shaft clamp with the bolt.
Torque: 9.8 N*m (100 kgf*cm, 87 in.*lbf)

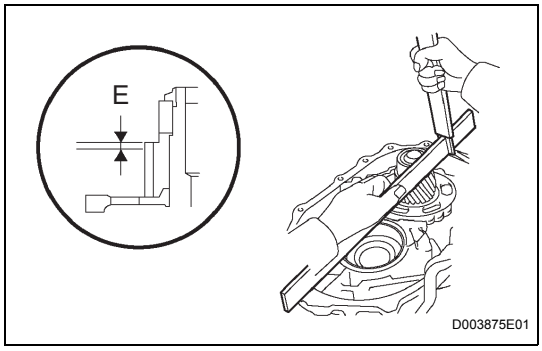

(d) Using a straightedge and vernier calipers as shown in the illustration, measure the gap between the top of the differential drive pinion in the underdrive planetary gear and the contact surface of the transaxle case and housing (Dimension E).
NOTICE:
Record dimension E for the following process.

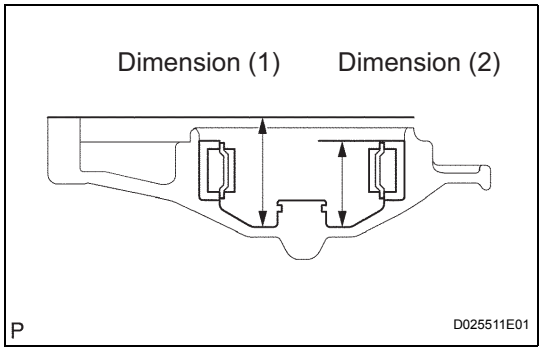

(e) As shown in the illustration, measure the 2 places of the transaxle housing, and calculate dimension F using the formula below.
NOTICE:
Recoad dimension F for the following process.
HINT:
Dimension F = Dimension (1) - Dimension (2)

AX

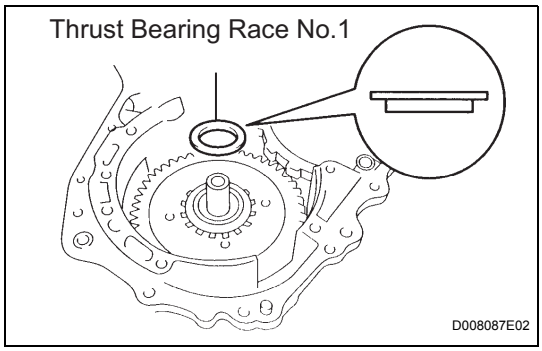

43. INSTALL MULTIPLE DISC CLUTCH HUB

(a) Install the thrust bearing race No.1 to the transaxle case while checking its direction.
Bearing race diameter: mm (in.)

	Inside	Outside
Bearing race	39.5 (1.555)	45.8 (1.803)

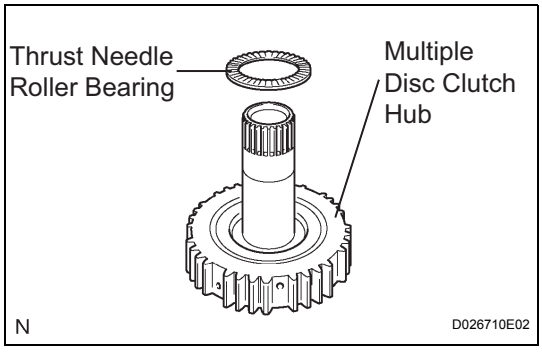

(b) Coat the thrust needle roller bearing and race with yellow petrolatum, install them onto the multiple disc clutch hub.
Thrust bearing and race diameter: mm (in.)

	Inside	Outside
Thrust Bearing	36.4 (1.433)	52.2 (2.055)

(c) Coat the needle roller bearing with ATF.

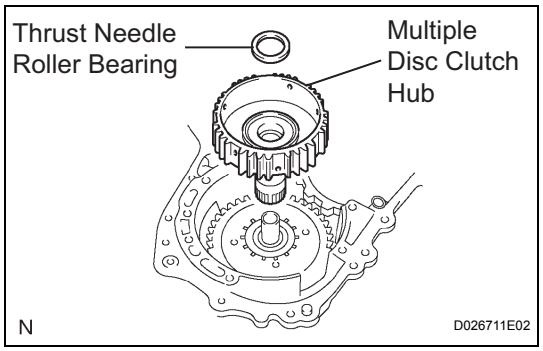

(d) Install the needle roller bearing to the multiple clutch hub.

Bearing diameter: mm (in.)

	Inside	Outside
Bearing	23.6 (0.929)	44 (1.732)

(e) Install the multiple clutch hub to the transaxle case.

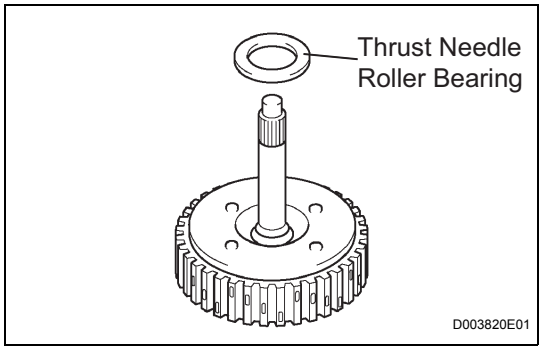

44. INSTALL FORWARD CLUTCH ASSEMBLY

(a) Coat the thrust needle roller bearing with ATF.

(b) Install the thrust needle roller bearing to the forward clutch.

Thrust bearing diameter: mm (in.)

	Inside	Outside
Thrust Bearing	33.58 (1.3220)	51.9 (2.043)

NOTICE:
Install the thrust bearing properly so that the no-colored race or blue ink jet race will be visible.

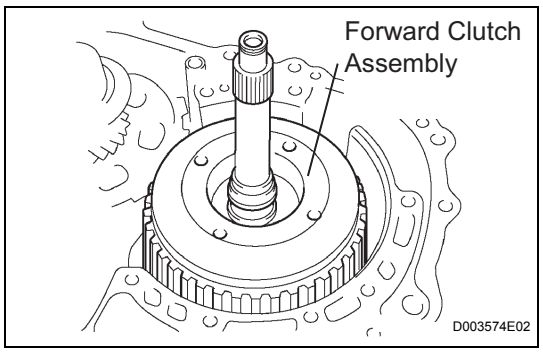

(c) Install the forward clutch to the forward clutch assembly.

NOTICE:
- **Align the splines of all discs in the forward clutch with those of multiple clutch hub to install them securely.**
- **Be careful not to damage the bushing inside of the forward clutch hub during installation.**

AX

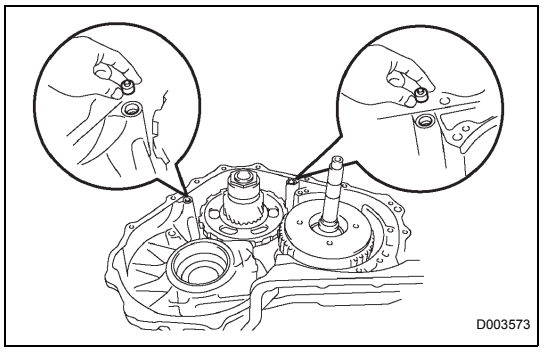

45. INSTALL OVERDRIVE BRAKE GASKET

(a) Install 2 new overdrive brake gaskets.

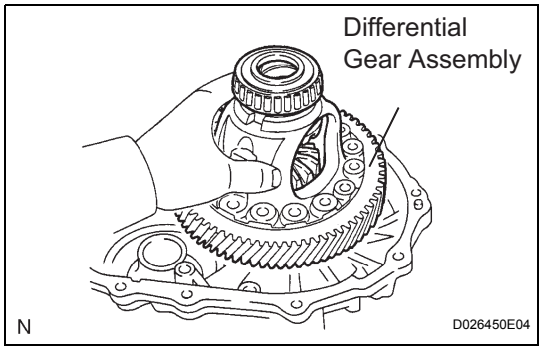

46. INSTALL DIFFERENTIAL GEAR ASSEMBLY

(a) Install the differential gear assembly to the transaxle case.

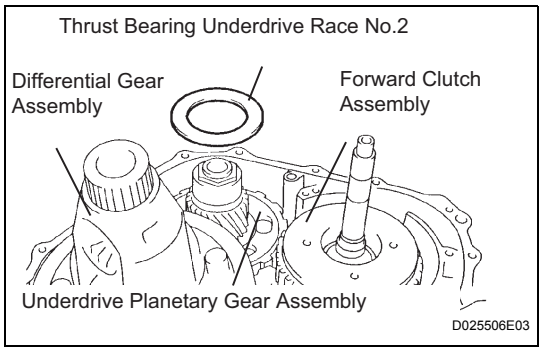

47. INSTALL THRUST BEARING UNDERDRIVE RACE NO.2

(a) Install the thrust bearing underdrive race No.2 to the underdrive planetary gear assembly.

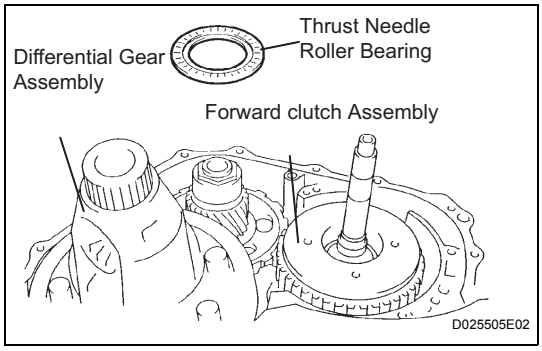

48. INSTALL THRUST NEEDLE ROLLER BEARING

(a) Coat the thrust needle roller bearing with ATF.

(b) Calculate the end play value using the following formula and values of Dimension E and F that are measured when installing the cylindrical roller bearing and underdrive planetary gear. Select an appropriate underdrive planetary gear thrust bearing race No.2 which satisfies the specified end play value, and install the selected bearing race.

End play:

0.498 to 0.993 mm (0.01961 to 0.03909 in.)

HINT:

End play = Dimension F - Dimension E - thrust bearing thickness 2.5 mm (0.0984 in.) - underdrive thrust bearing race No.2 thickness.

Race thickness: mm (in.)

F - E	Thickness
Less than 7.72 (0.3039)	3.5 (0.138)
7.72 (0.3039)	3.8 (0.150)

Bearing and bearing race diameter: mm (in.)

	Inside	Outside
Bearing	57.2 (2.252)	84.96 (3.345)
Bearing race	56.4 (2.22)	83 (3.268)

AX

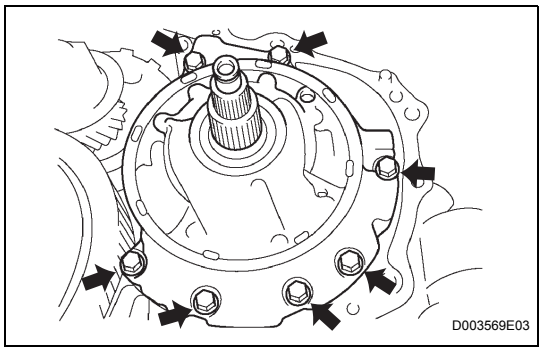

49. INSTALL OIL PUMP ASSEMBLY

(a) Install the oil pump to the transaxle case with the 7 bolts.

Torque: 22 N*m (226 kgf*cm, 16 ft.*lbf)

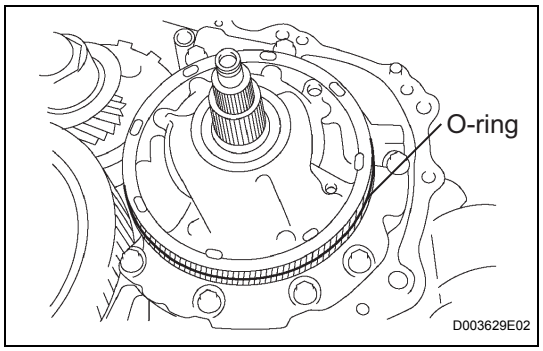

(b) Coat the O-ring of oil pump with ATF.
NOTICE:
Confirm that the input shaft rotates smoothly with the manual operation after installing the oil pump.

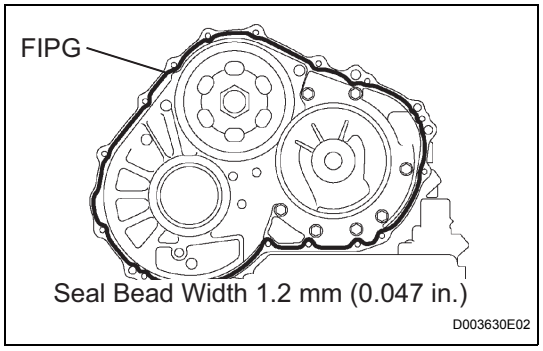

50. INSTALL TRANSAXLE HOUSING

(a) Remove any packing material and be careful not to spill oil on the contact surface of the transaxle case or transaxle housing.

(b) Apply FIPG to the transaxle case.
FIPG:
Part No. 08826-00090, THREE BOND 1281 or equivalent

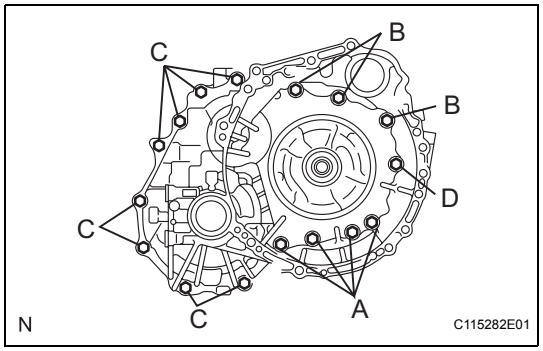

(c) Install the transaxle housing and 16 bolts to the transaxle case.
Torque: Bolt A
25 N*m (255 kgf*cm, 18 ft.*lbf)
Bolt B
33 N*m (337 kgf*cm, 24 ft.*lbf)
Bolt C
29 N*m (295 kgf*cm, 21 ft.*lbf)
Bolt D
22 N*m (226 kgf*cm, 16 ft.*lbf)
HINT:
Apply seal packing or equivalent to bolts A and D.
Seal packing:
THREE BOND 2403 or equivalent
Bolt length
Bolt A:
50 mm (1.969 in.)
Bolt B:
50 mm (1.969 in.)
Bolt C:
42 mm (1.654 in.)
Bolt D:
72 mm (2.835 in.)
NOTICE:
Tighten the bolts within 10 minutes of sealant application.

AX

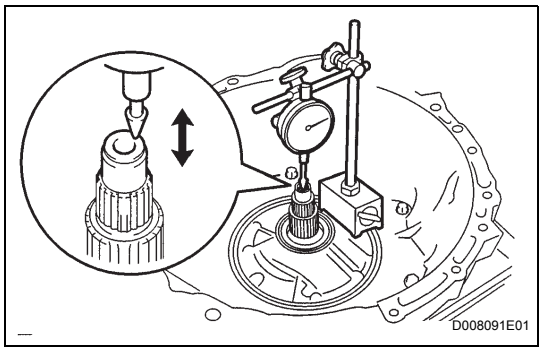

51. INSPECT INPUT SHAFT END PLAY

(a) Using a dial indicator, measure the input shaft end play.

End play:

0.262 to 1.249 mm (0.0100 to 0.0494 in.)

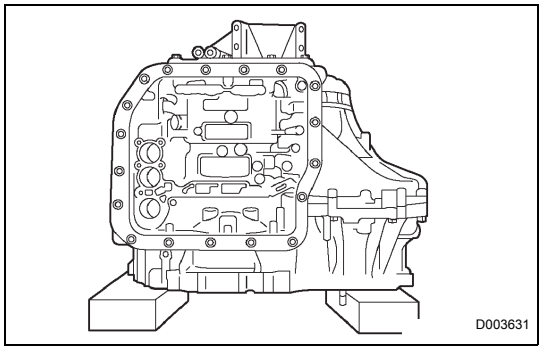

52. FIX AUTOMATIC TRANSAXLE ASSEMBLY

(a) Fix the transaxle assembly.

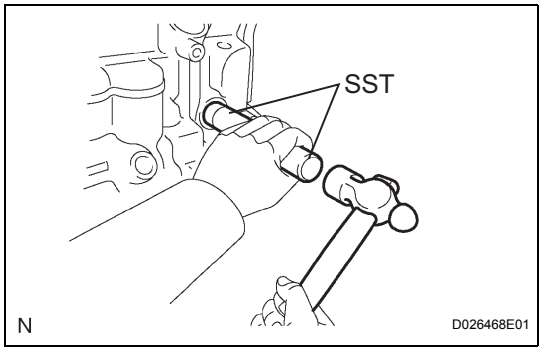

53. INSTALL MANUAL VALVE LEVER SHAFT OIL SEAL

(a) Coat a new oil seal with MP grease.

(b) Install the oil seal to the transaxle case.

SST 09950-60010 (09951-00230), 09950-70010 (09951-07100)

Oil seal installation depth:

0 +- 0.5 mm (0 +- 0.197 in.)

AX

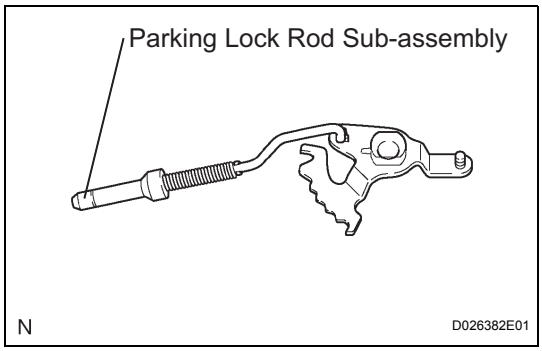

54. INSTALL PARKING LOCK ROD SUB-ASSEMBLY

(a) Install the parking lock rod to the manual valve lever.

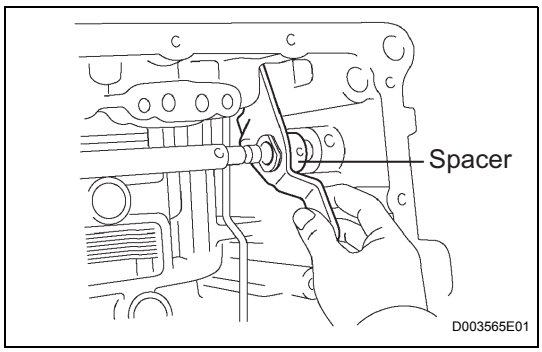

55. INSTALL MANUAL VALVE LEVER SUB-ASSEMBLY

(a) Install a new spacer and manual valve lever shaft to the transaxle case.

NOTICE:

Do not damage the oil seal when installing the shaft to the transaxle case.

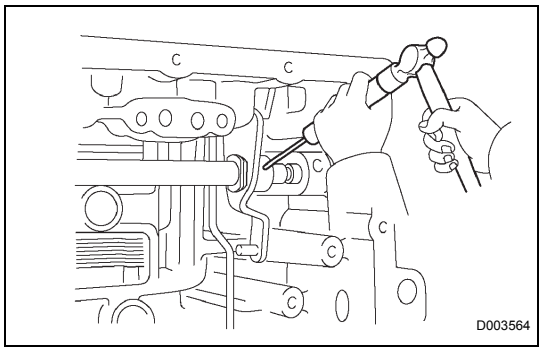

(b) Using a pin punch and hammer, drive in a new pin.

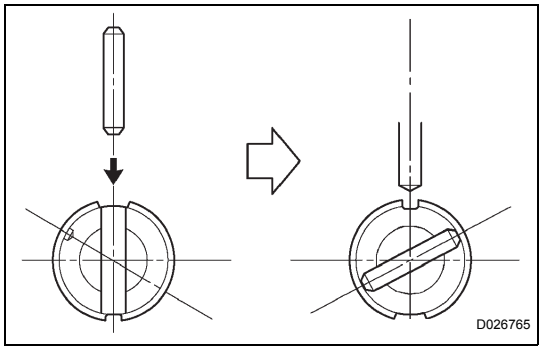

(c) Turn the spacer and the lever shaft to align the small hole for locating the staking position in the spacer with the staking position mark on the lever shaft.
(d) Using a pin punch, stake the spacer through the small hole.
(e) Check that the spacer does not turn.

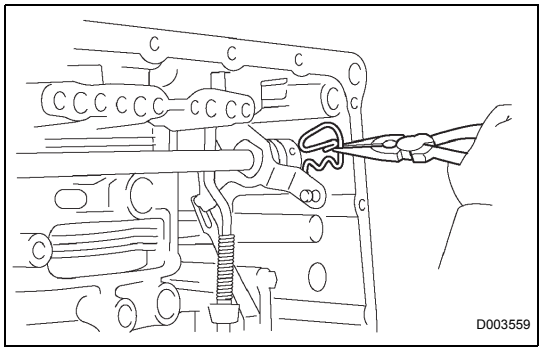

56. INSTALL MANUAL VALVE LEVER SHAFT RETAINER SPRING

(a) Using needle-nose pliers, install the retainer spring.
NOTICE:
Hang the spring on the shaft firmly.

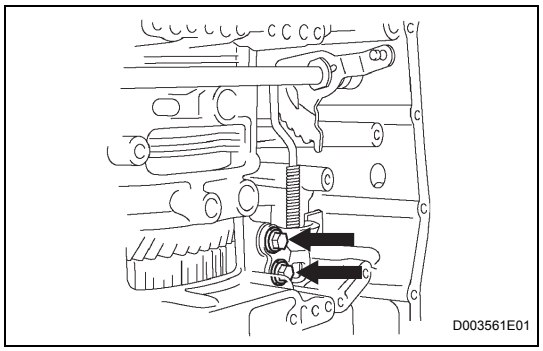

57. INSTALL PARKING LOCK PAWL BRACKET

(a) Install the parking lock pawl bracket with the 2 bolts.
Torque: 20 N*m (205 kgf*cm, 15 ft.*lbf)
Bolt length:
25 mm (0.984 in.)
NOTICE:
Make sure that the parking rod is placed between the parking pawl and the guide of the parking bracket when the parking bracket is installed.

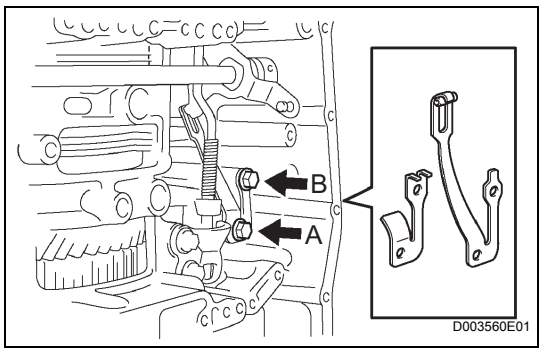

58. INSTALL MANUAL DETENT SPRING SUB-ASSEMBLY

(a) Install the manual detent spring and cover with the 2 bolts.
NOTICE:
Make sure to install the manual detent spring and cover in this order.
HINT:
Tighten bolt A first, and then bolt B.
Torque: Bolt A
20 N*m (205 kgf*cm, 15 ft.*lbf)

AX

Bolt B
12 N*m (120 kgf*cm, 9 ft.*lbf)
Bolt length:
Bolt A:
27 mm (1.063 in.)
Bolt B:
16 mm (0.630 in.)

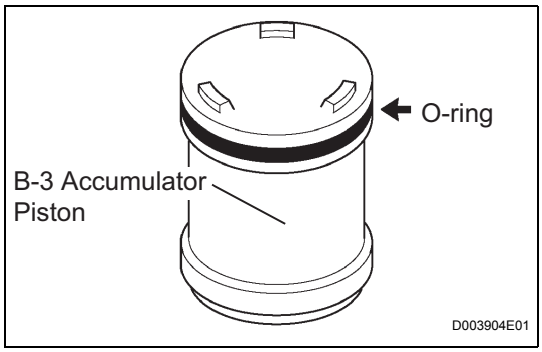

59. INSTALL B-3 ACCUMULATOR PISTON

(a) Coat a new O-ring with ATF, install it to the B-3 accumulator piston.
NOTICE:
Make sure that the O-ring is not twisted and that it does not protrude abnormally from the accumulator piston. Apply sufficient ATF before installing the O-ring. The O-ring must be installed in the correct position.

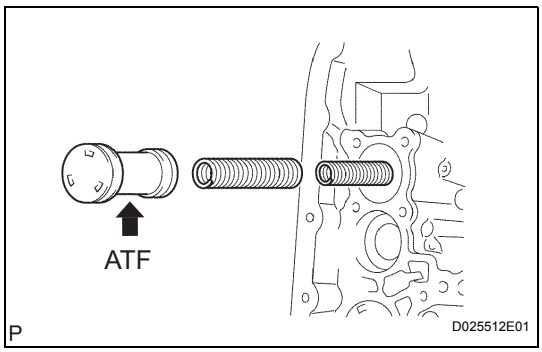

(b) Coat the piston with ATF, install it to the transaxle case.
NOTICE:
Install the springs to each accumulator piston, checking the identification color or each spring.
Accumulator spring:

Free length Outer diameter mm (in.)	Color
Inner 62.00 (2.4409) / 15.50 (0.610)	Purple
Outer 74.23 (2.9224) / 21.70 (0.854)	Purple

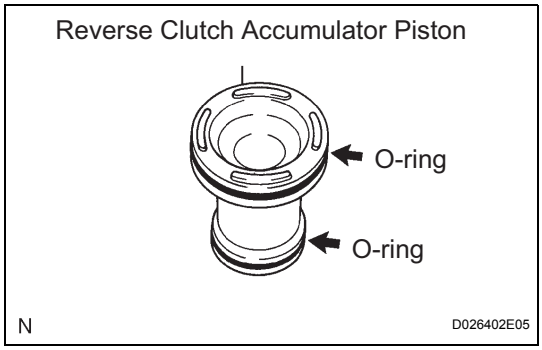

60. INSTALL REVERSE CLUTCH ACCUMULATOR PISTON

(a) Coat 2 new O-rings with ATF, install them to the reverse accumulator piston.
NOTICE:
Make sure that the O-ring is not twisted and that it does not protrude abnormally from the accumulator piston. Apply sufficient ATF before installing the O-ring. The O-ring must be installed in the correct position.

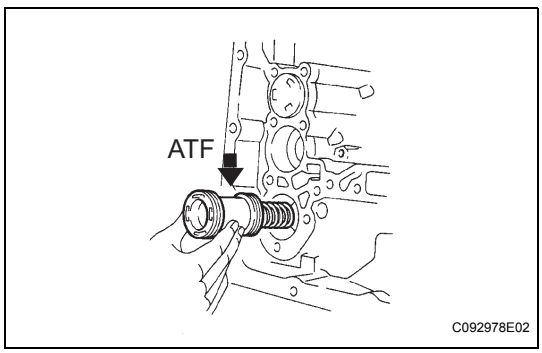

(b) Coat the piston with ATF, install it to the transaxle case.
NOTICE:
Install the springs to each accumulator piston, checking the identification color or each spring.
Accumulator spring:

Free length Outer diameter mm (in.)	Color
60.96 (2.3999) / 14.10 (0.555)	Yellow

AX

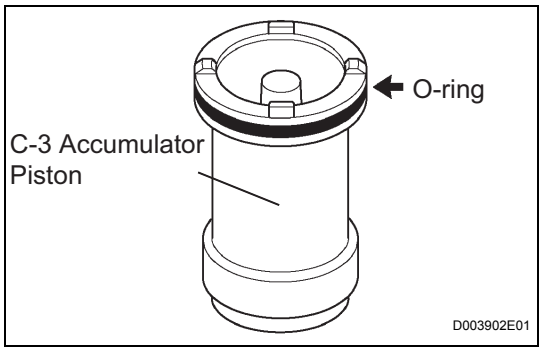

61. INSTALL C-3 ACCUMULATOR PISTON

(a) Coat a new O-ring with ATF, install it to the C-3 accumulator piston.

NOTICE:

Make sure that the O-ring is not twisted and that it does not protrude abnormally from the accumulator piston. Apply sufficient ATF before installing the O-ring. The O-ring must be installed in the correct position.

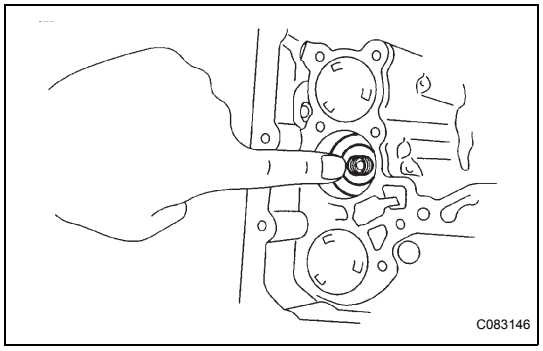

(b) Coat the piston with ATF, install it to the transaxle case.

NOTICE:

Install the springs to each accumulator piston, checking the identification color or each spring.

Accumulator spring:

Free length Outer diameter mm (in.)	Color
72.20 (2.8425) / 19.0 (0.748)	Colorless

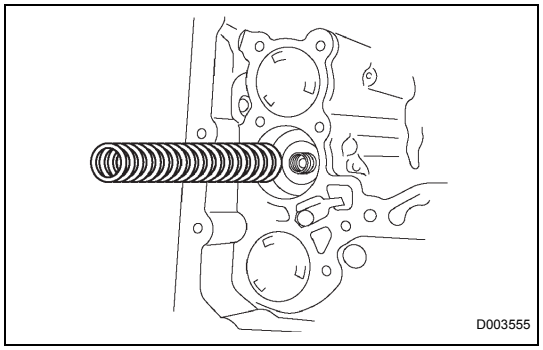

(c) Install the spring to the C-3 accumulator piston.

NOTICE:

Install the springs to each accumulator piston, checking the identification color or each spring.

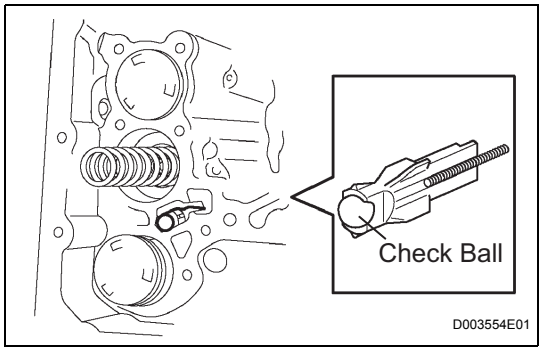

62. INSTALL CHECK BALL BODY

(a) Coat the check ball body with ATF.

(b) Install the check ball body and spring.

NOTICE:

Be sure to place the spring in the hole in the check ball body. Be careful about the direction of the parts.

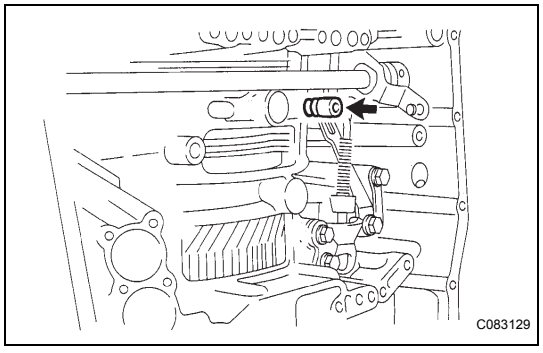

63. INSTALL BRAKE DRUM GASKET

(a) Coat a new brake drum gasket with ATF, install it to the transaxle case.

NOTICE:

Be sure not to damage the lip of the transaxle case brake gasket when inserting the gasket to the case. Apply sufficient ATF to the gasket before installation. Be careful about the direction of parts.

AX

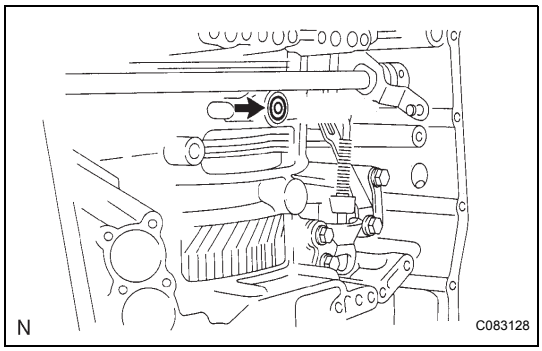

64. INSTALL TRANSAXLE CASE 2ND BRAKE GASKET

(a) Coat a new transaxle case 2nd brake gasket with ATF, and install it to the transaxle case.

NOTICE:

Be sure not to damage the lip of the transaxle case brake gasket when inserting the gasket to the case. Apply sufficient ATF to the gasket before installation. Be careful about the direction of parts.

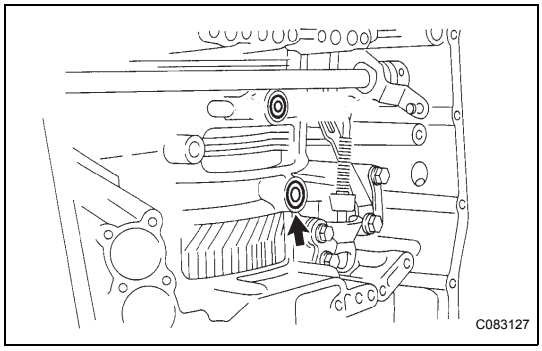

65. INSTALL GOVERNOR APPLY GASKET NO.1

(a) Coat a new governor apply gasket No.1 with ATF, and install it to the transaxle case.

NOTICE:

Be sure not to damage the lip of the transaxle case brake gasket when inserting the gasket to the case. Apply sufficient ATF to the gasket before installation. Be careful about the direction of parts.

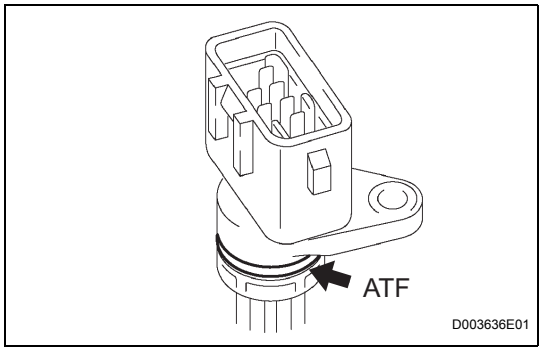

66. INSTALL TRANSMISSION WIRE

(a) Coat a new O-ring with ATF, and install it to the transmission wire.

NOTICE:

Make sure that the O-ring is not twisted, protruded, or pinched when installing the wire transmission to the transaxle case. Apply sufficient ATF to the O-ring before installation.

AX

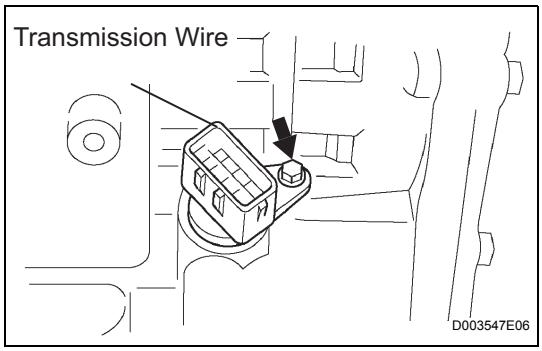

(b) Install the transmission wire retaining bolt.

Torque: 5.4 N*m (55 kgf*cm, 48 in.*lbf)

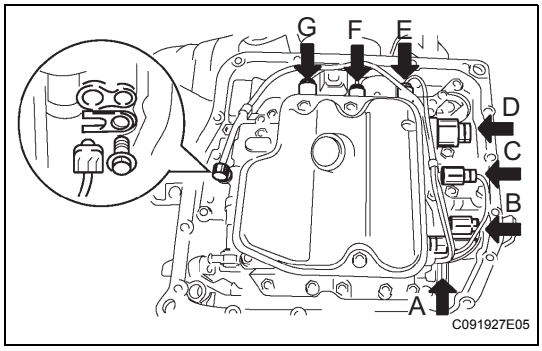

67. CONNECT TRANSMISSION WIRE

(a) Coat an O-ring of the ATF temperature sensor with ATF.

(b) Install the ATF temperature sensor with the lock plate and bolt.

Torque: 6.6 N*m (67 kgf*cm, 58 in.*lbf)

(c) Connect the 7 solenoid connectors.

NOTICE:

- **Connect the connectors A, B, C, D, E, F, G, in the order from shortest to longest.**
- **Apply ATF to the bolt.**

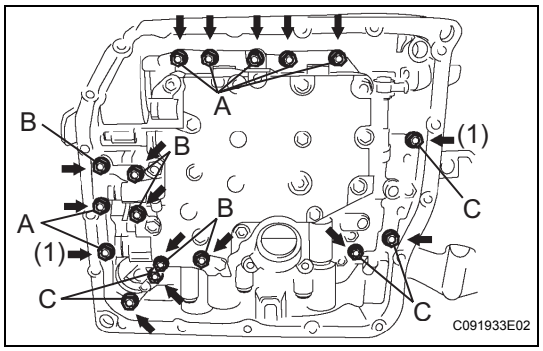

68. INSTALL TRANSMISSION VALVE BODY ASSEMBLY

(a) While positioning the manual valve lever position, install the valve body to the transaxle case with the 17 bolts.

Torque: 11 N*m (110 kgf*cm, 8 ft.*lbf)

Bolt length:

Bolt A:

41 mm (1.614 in.)

Bolt B:

57 mm (2.244 in.)

Bolt C:

25 mm (0.984 in.)

NOTICE:

- **Push the valve body against the accumulator piston spring and the check ball body to install the valve body.**
- **When installing the valve body to the transaxle case, do not hold the solenoids.**
- **Temporarily tighten the bolts marked with (1) in the illustration first because they are positioning bolts.**

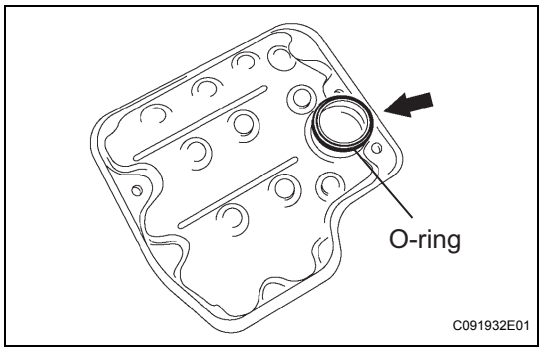

69. INSTALL VALVE BODY OIL STRAINER ASSEMBLY

(a) Coat a new O-ring with ATF and install it to the oil strainer.

NOTICE:

Make sure that the O-ring is not twisted or pinched. Apply sufficient ATF to the O-ring before installation.

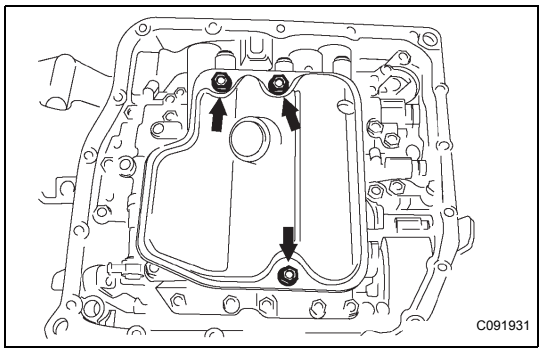

(b) Install the oil strainer and 3 bolts to the valve body.

Torque: 11 N*m (110 kgf*cm, 8 ft.*lbf)

NOTICE:

Apply ATF to the bolts.

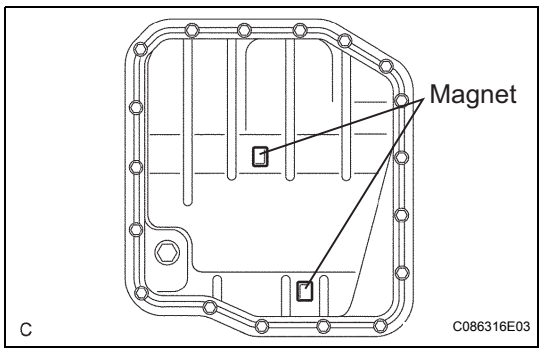

70. INSTALL AUTOMATIC TRANSAXLE OIL PAN SUB-ASSEMBLY

(a) Install the 2 magnets to the oil pan.

(b) Apply seal packing or equivalent to new 18 bolts.

Seal packing:

THREE BOND 2430 or equivalent

AX

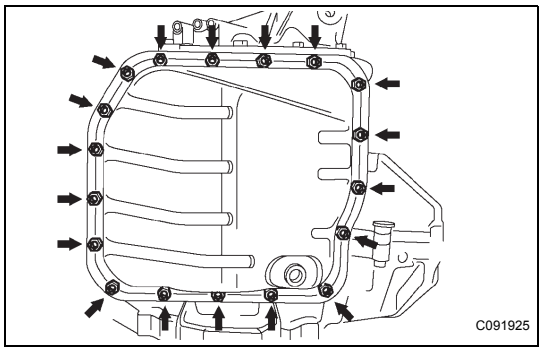

(c) Install the oil pan and new oil pan gasket to the transaxle case with the 18 bolts.
Torque: 7.8 N*m (80 kgf*cm, 69 in.*lbf)
NOTICE:
- **Tighten the bolts within 10 minutes of sealant application.**
- **Completely remove any oil or grease from the contact surface of the transaxle case and the oil pan with the gasket before installing the oil pan to the case.**

71. INSTALL TRANSAXLE CASE NO.1 PLUG

(a) Coat 4 new O-rings with ATF, and install them to the 4 transaxle case No.1 plugs.
(b) Install the 4 transaxle case No.1 plugs to the transaxle case.
Torque: 7.4 N*m (75 kgf*cm, 65 in.*lbf)

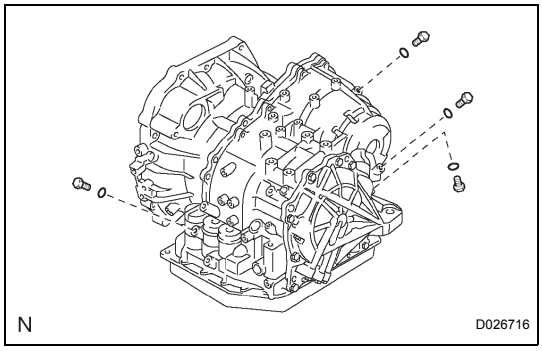

72. INSTALL SPEED SENSOR

(a) Coat 2 new O-rings with ATF and install them to the 2 sensors.
(b) Install the 2 sensors to the transaxle case with the 2 bolts.
Torque: 11.0 N*m (115 kgf*cm, 8 ft.*lbf)

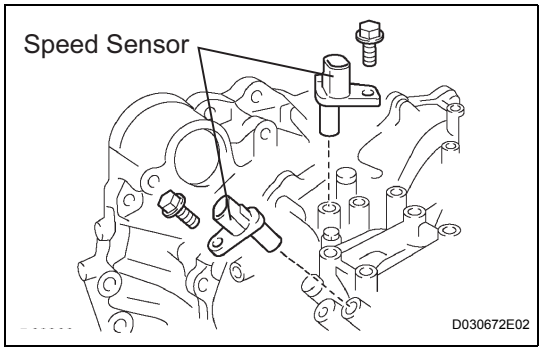

AX

73. INSTALL OIL COOLER TUBE UNION (OUTLET OIL COOLER UNION)

(a) Coat a new O-ring with ATF, and install it to the elbow.
(b) Install the elbow to the transaxle case.
Torque: 27 N*m (276 kgf*cm, 20 ft.*lbf)

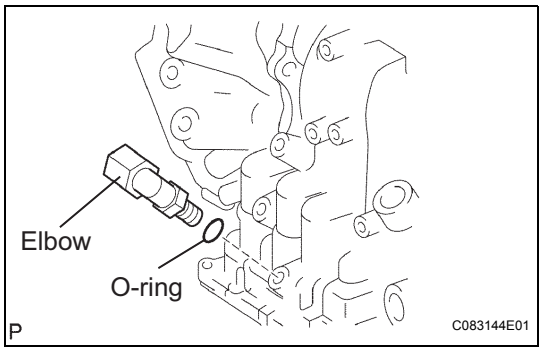

74. INSTALL OIL COOLER TUBE UNION (INLET OIL COOLER UNION)

(a) Coat a new O-ring with ATF, and install it to the union.
(b) Install the union to the transaxle case.
Torque: 25 N*m (255 kgf*cm, 18 ft.*lbf)

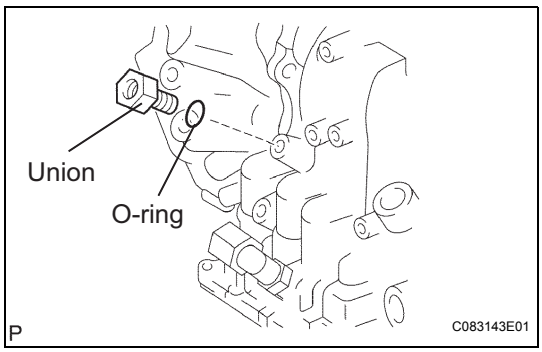

75. INSTALL BREATHER PLUG HOSE

(a) Install the breather plug hose to the transaxle case firmly.

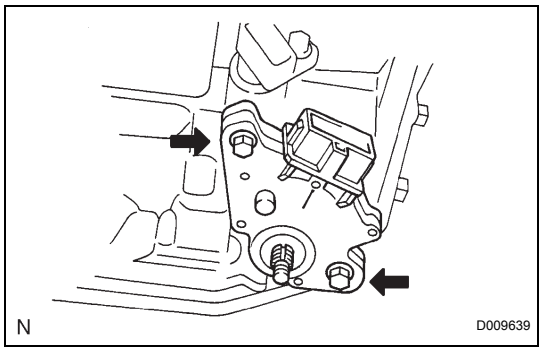

76. INSTALL PARK/NEUTRAL POSITION SWITCH ASSEMBLY

(a) Install the park/neutral position switch onto the manual valve lever shaft, and temporarily install the 2 adjusting bolts.

(b) Install a new nut stopper and nut.
Torque: 6.9 N*m (70 kgf*cm, 61 in.*lbf)

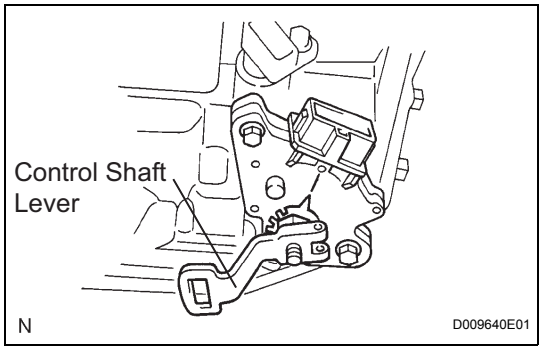

(c) Temporarily install the control shaft lever.

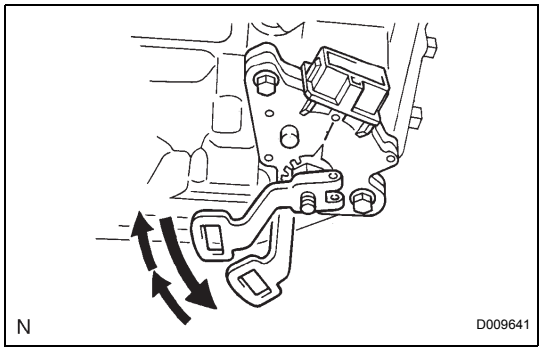

(d) Turn the lever counterclockwise until it stops, and then turn it clockwise 2 notches.

(e) Remove the control shaft lever.

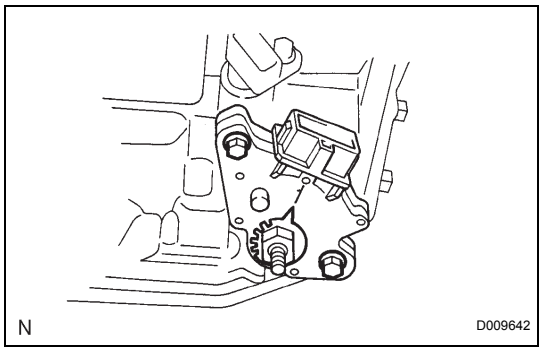

(f) Align the groove with the neutral basic line.

(g) Tighten the 2 bolts.
Torque: 5.4 N*m (55 kgf*cm, 48 in.*lbf)

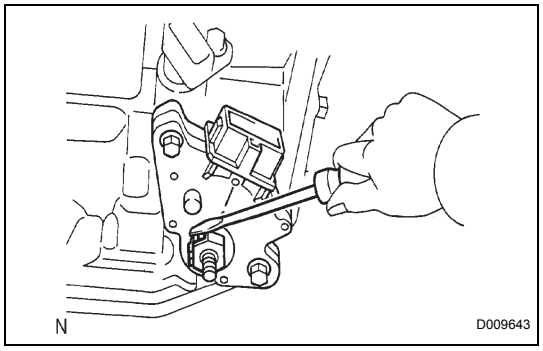

(h) Using a screwdriver, stake the nut with the nut stopper.

AX

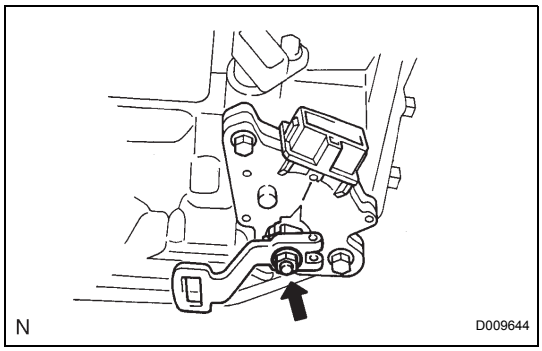

(i) Install the control shaft lever, washer and nut.
Torque: 13 N*m (130 kgf*cm, 9 ft.*lbf)

77. INSTALL SPEEDOMETER DRIVEN HOLE (ATM) COVER SUB-ASSEMBLY

(a) Coat a new O-ring with ATF and install it to the speedometer driven hole cover.

(b) Install the bolt and speedometer driven hoke cover sub assembly to the transaxle assembly.
Torque: 6.9 N*m (70 kgf*cm, 61 in.*lbf)

OIL PUMP

COMPONENTS

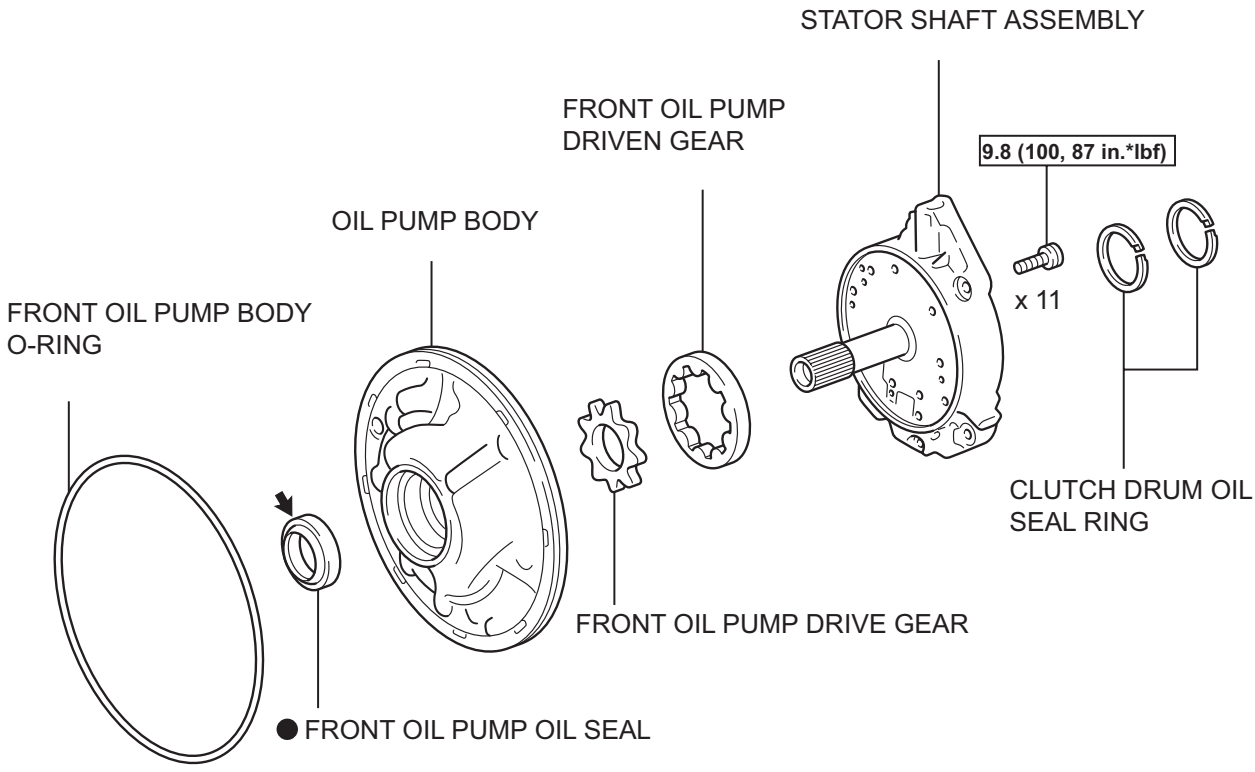

N*m (kgf*cm, ft.*lbf): Specified torque

● Non-reusable part

⬅ Apply petroleum jelly

N

C114866E01

AX

DISASSEMBLY

1. INSPECT OIL PUMP ASSEMBLY

HINT:

(See page AX-239)

2. REMOVE CLUTCH DRUM OIL SEAL RING

(a) Remove the 2 clutch drum oil seal rings.

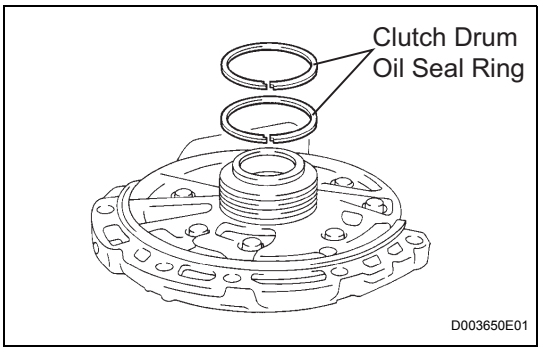

3. REMOVE STATOR SHAFT ASSEMBLY

(a) Using a "torx" socket (T30), remove the 11 bolts and stator shaft.

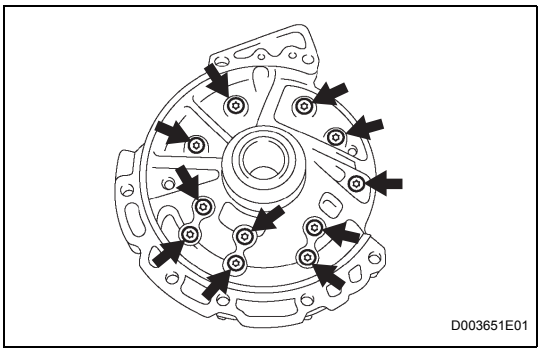

4. INSPECT CLEARANCE OF OIL PUMP ASSEMBLY

HINT:

(See page AX-239)

5. REMOVE FRONT OIL PUMP DRIVE GEAR

(a) Remove the front oil pump drive gear.

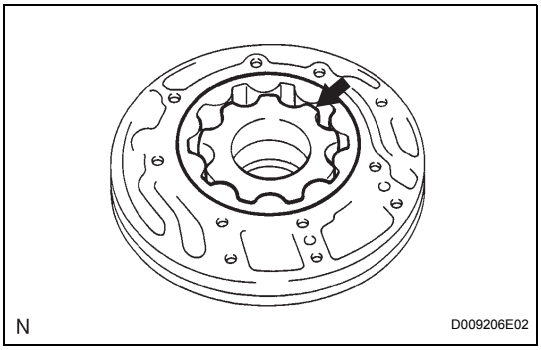

6. REMOVE FRONT OIL PUMP DRIVEN GEAR

(a) Remove the front oil pump driven gear.

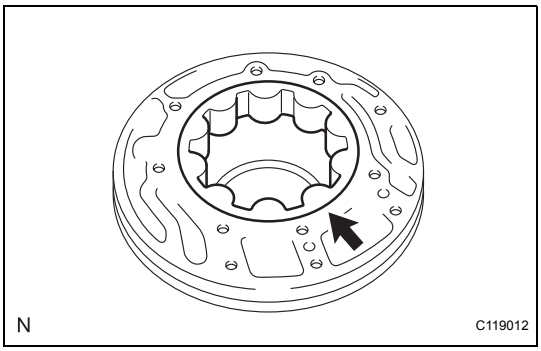

AX

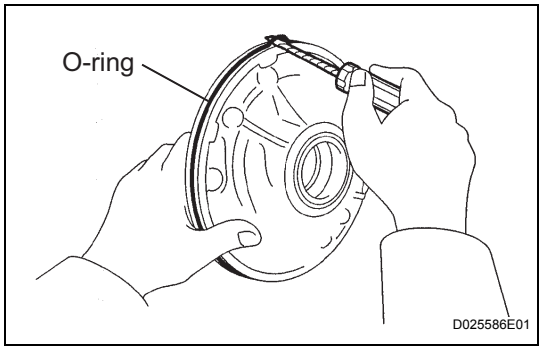

7. REMOVE FRONT OIL PUMP BODY O-RING

(a) Using a screwdriver, remove the O-ring.
HINT:
Tape the screwdriver before use.

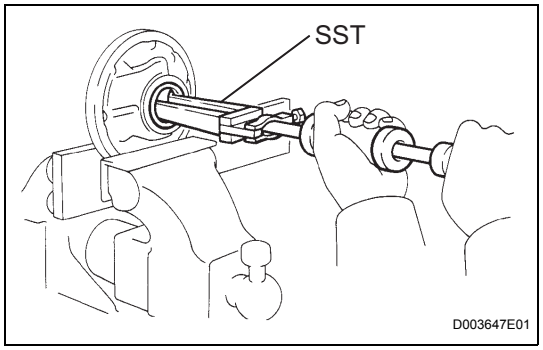

8. REMOVE FRONT OIL PUMP OIL SEAL

(a) Mount the oil pump in a soft jaw vise.
(b) Using SST, remove the oil seal from the oil pump body.
SST 09308-00010

INSPECTION

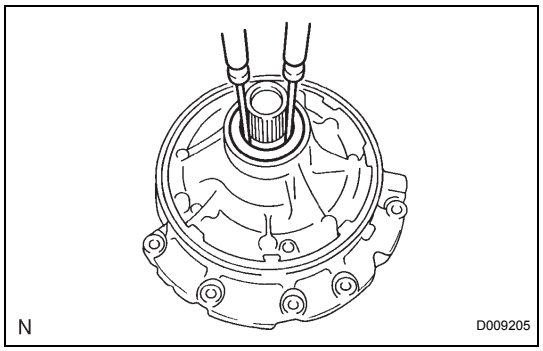

1. INSPECT OIL PUMP ASSEMBLY

(a) Turn the drive gear with the 2 screwdrivers and make sure that it rotates smoothly.
NOTICE:
Be careful not to damage the oil seal lip.

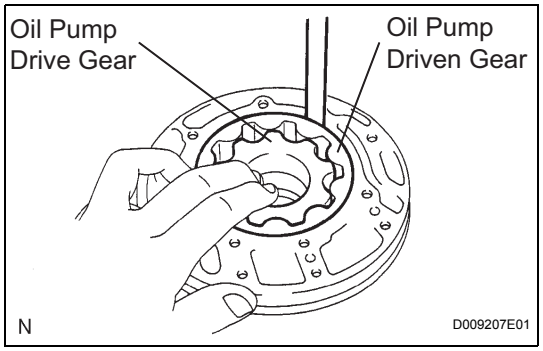

2. INSPECT CLEARANCE OF OIL PUMP ASSEMBLY

(a) Push the driven gear to one side of the body.
(b) Using a feeler gauge, measure the clearance.
Standard body clearance:
0.10 to 0.17 mm (0.0039 to 0.0067 in.)
Side clearance:
0.02 to 0.05 mm (0.001 to 0.002 in.)
Maximum body clearance:
0.17 mm (0.0067 in.)
If the body clearance is greater than the maximum, replace the oil pump body sub-assembly.

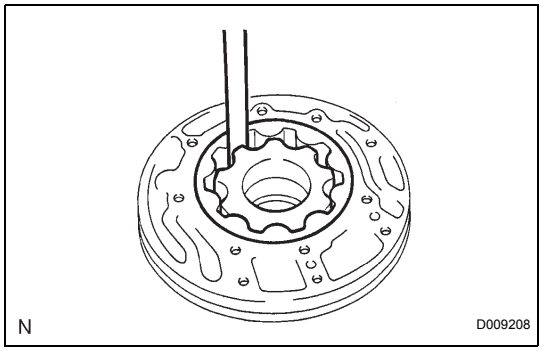

(c) Using a feeler gauge, measure the tip clearance between the driven gear teeth and drive gear teeth.
Standard tip clearance:
0.07 to 0.15 mm (0.0028 to 0.0059 in.)
Maximum tip clearance:
0.15 mm (0.0059 in.)
If the tip clearance is greater than the maximum, replace the oil pump body sub-assembly.

AX

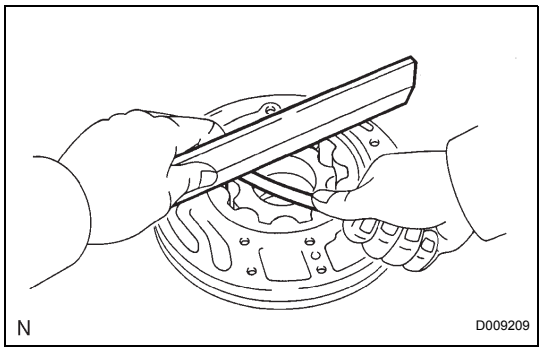

(d) Using a straightedge and feeler gauge, measure the side clearance of both gears.
Standard side clearance:
0.02 to 0.05 mm (0.0008 to 0.0020 in.)
Maximum side clearance:
0.05 mm (0.0020 in.)

Drive gear thickness: mm (in.)

Mark	Thickness
A	11.690 to 11.699 (0.4602 to 0.4606)
B	11.700 to 11.709 (0.4606 to 0.4610)
C	11.710 to 11.720 (0.4610 to 0.4614)
D	11.721 to 11.730 (0.4615 to 0.4618)
E	11.731 to 11.740 (0.4619 to 0.4622)

Driven gear thickness: mm (in.)

Mark	Thickness
A	11.690 to 11.699 (0.4602 to 0.4606)
B	11.700 to 11.709 (0.4606 to 0.4610)
C	11.710 to 11.720 (0.4610 to 0.4614)
D	11.721 to 11.730 (0.4615 to 0.4618)
E	11.731 to 11.740 (0.4619 to 0.4622)

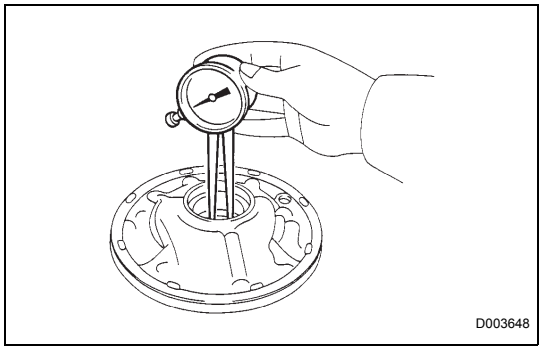

3. INSPECT FRONT OIL PUMP AND GEAR BODY SUB-ASSEMBLY

(a) Using a dial indicator, measure the inside diameter of the oil pump body bushing.
Standard inside diameter:
38.113 to 38.138 mm (1.50051 to 1.50149 in.)
Maximum inside diameter:
38.188 mm (1.50346 in.)
If the inside diameter is greater than the maximum, replace the oil pump body sub-assembly.

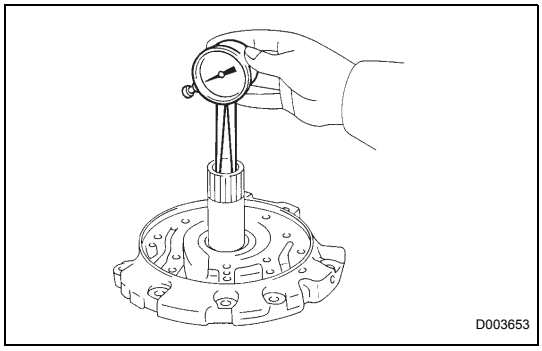

4. INSPECT STATOR SHAFT ASSEMBLY

(a) Using a dial indicator, measure the inside diameter of the stator shaft.
Standard inside diameter:
21.500 to 21.526 mm (0.84646 to 0.84748 in.)
Maximum inside diameter:
21.57 mm (0.8492 in.)
If the inside diameter is greater than the maximum, replace the stator shaft.

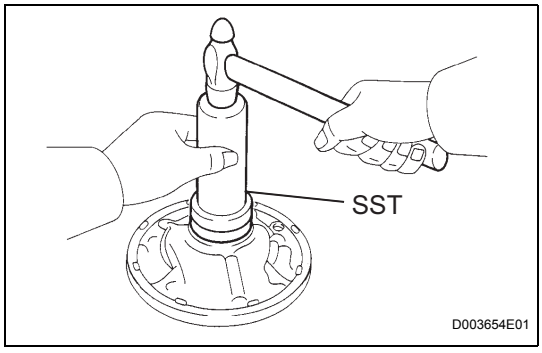

REASSEMBLY

1. INSTALL FRONT OIL PUMP OIL SEAL

(a) Using SST and a hammer, install a new oil seal to the oil pump body.
SST 09350-32014 (09351-32140)
HINT:
The seal end should be flat with the outer edge of the oil pump.

(b) Coat the lip of the oil seal with MP grease.

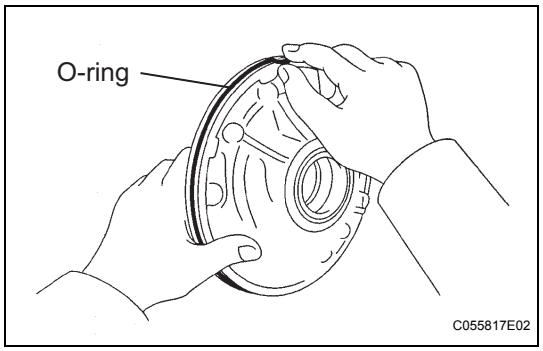

2. INSTALL FRONT OIL PUMP BODY O-RING

(a) Coat new O-ring with ATF, and install it to the oil pump body.

NOTICE:

Make sure that the O-ring is not twisted or pinched. Moreover, apply enough ATF to the O-ring before installation.

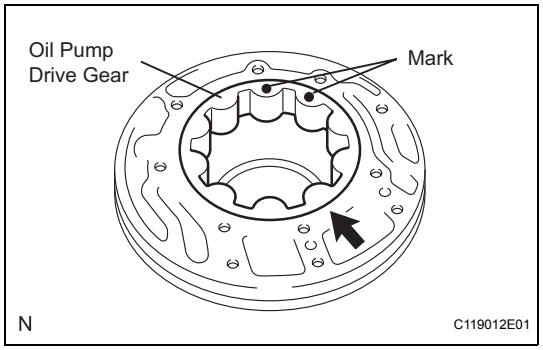

3. INSTALL FRONT OIL PUMP DRIVEN GEAR

(a) Coat the front oil pump driven gear with ATF, and install it to the oil pump body with the marked side facing upward.

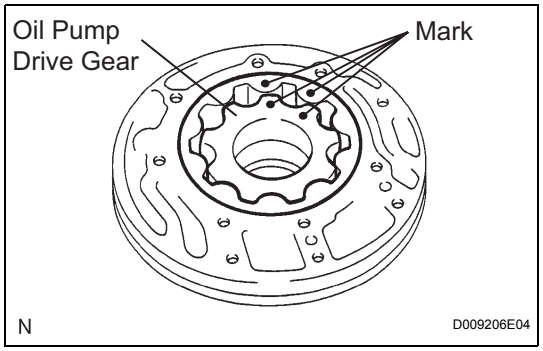

4. INSTALL FRONT OIL PUMP DRIVE GEAR

(a) Coat the front oil pump drive gear with ATF, and install it to the oil pump body with the marked side facing upward.

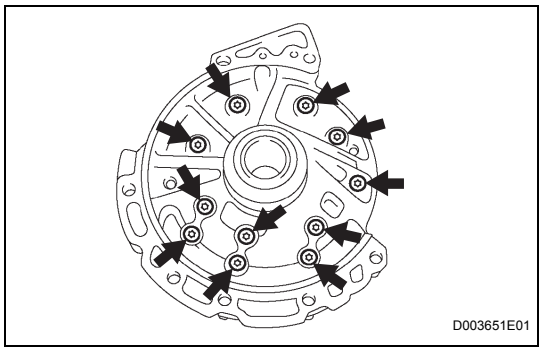

5. INSTALL STATOR SHAFT ASSEMBLY

(a) Set the stator shaft and align it with each bolt hole.

(b) Using a "torx" socket (T30), install the 11 bolts.

Torque: 9.8 N*m (100 kgf*cm, 87 in.*lbf)

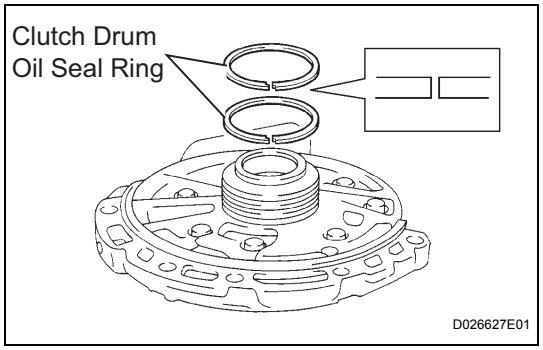

6. INSTALL CLUTCH DRUM OIL SEAL RING

(a) Coat 2 new clutch drum oil seal rings with ATF.

(b) Install 2 new clutch drum oil seal rings.

NOTICE:

Do not expand the ring ends excessively.

7. INSPECT OIL PUMP ASSEMBLY

HINT:

(See page AX-239)

AX

SECOND BRAKE PISTON

COMPONENTS

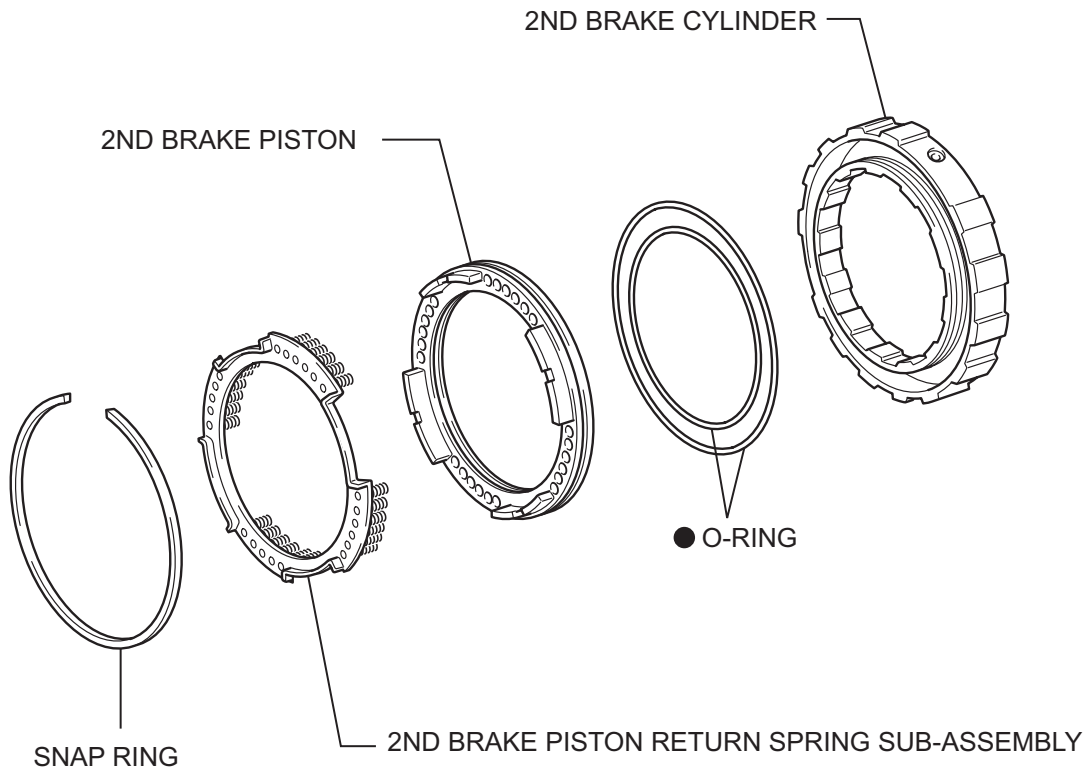

AX

● Non-reusable part

N

C109736E04

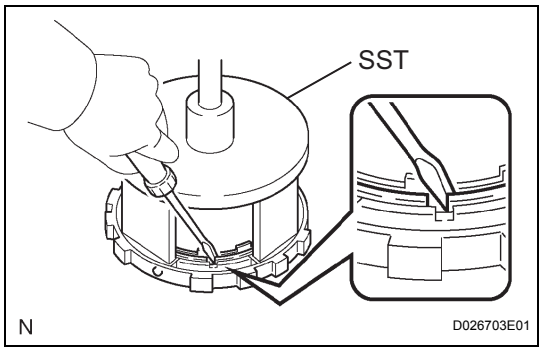

DISASSEMBLY

1. REMOVE 2ND BRAKE PISTON RETURN SPRING SUB-ASSEMBLY

(a) Place SST on the return spring and compress the return spring with a press.
SST 09387-00060

(b) Using a screwdriver, remove the snap ring.

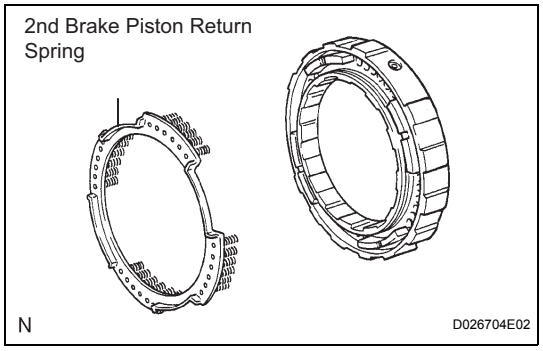

(c) Remove the 2nd brake piston return spring.

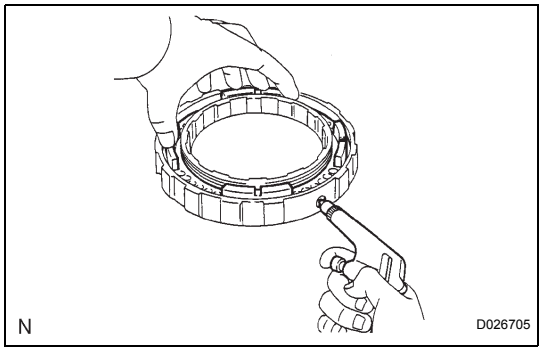

2. REMOVE 2ND BRAKE PISTON

(a) Hold the 2nd brake piston and apply compressed air (392 kPa, 4.0 kgf/cm^2, 57 psi) to the 2nd brake cylinder to remove the 2nd brake piston.
NOTICE:
Hold the piston with a shop rag or a piece of cloth when removing the piston. Failure to do so may result in the piston jumping out from the cylinder.

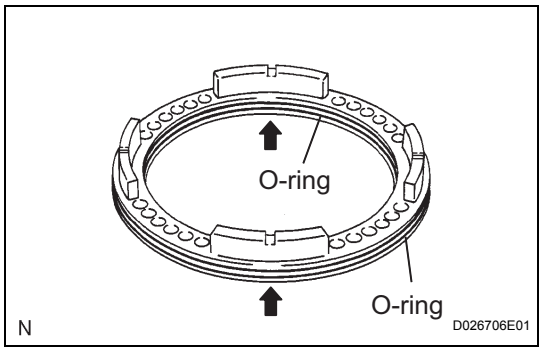

3. REMOVE 2ND BRAKE PISTON O-RING

(a) Remove the 2 O-rings from the 2nd brake piston.

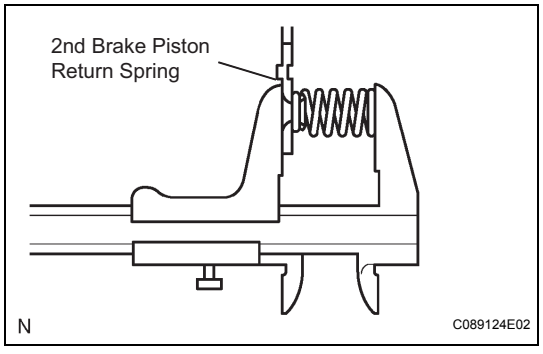

INSPECTION

1. INSPECT 2ND BRAKE PISTON RETURN SPRING SUB-ASSEMBLY

(a) Using vernier calipers, measure the free length of the spring together with the spring seat.
Standard free length:
16.61 mm (0.6539 in.)

AX

REASSEMBLY

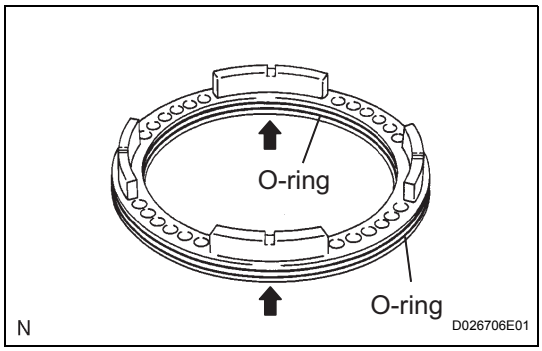

1. INSTALL 2ND BRAKE PISTON O-RING

(a) Coat 2 new O-rings with ATF, and install them in the 2nd brake piston.

NOTICE:

Make sure that the O-ring is not twisted or pinched.

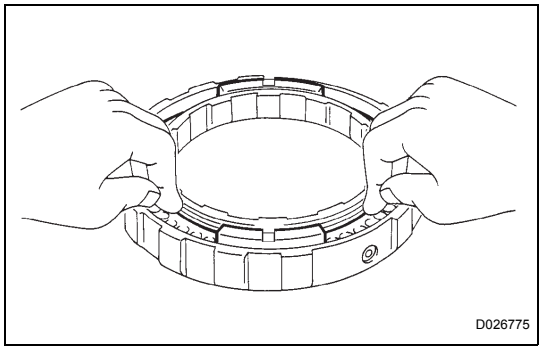

2. INSTALL 2ND BRAKE PISTON

(a) Coat the 2nd brake piston with ATF, and install it to the 2nd brake cylinder.

NOTICE:

Be careful not to damage the O-ring.

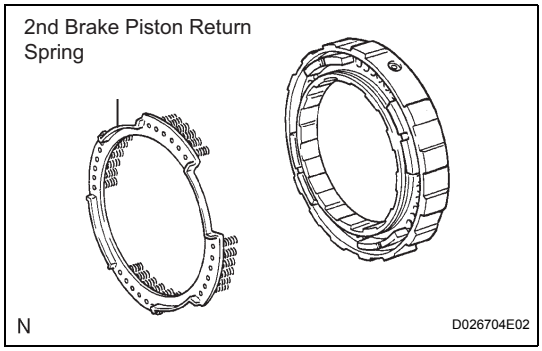

3. INSTALL 2ND BRAKE PISTON RETURN SPRING SUB-ASSEMBLY

(a) Install the 2nd brake piston return spring.

NOTICE:

Installing the spring sub- assembly, check that all of the springs are fit in the piston correctly.

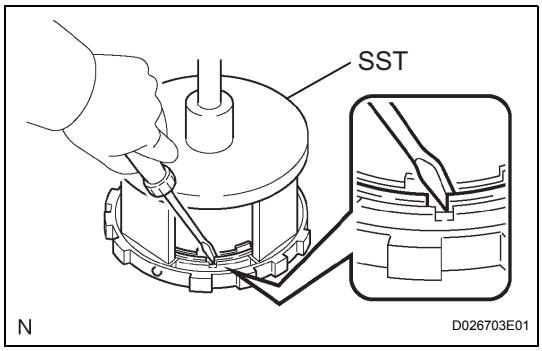

(b) Place SST on the piston return spring, and compress the piston return spring with a press.

SST 09387-00060

(c) Using a screwdriver, install the snap ring.

(d) Be sure that the end gap of the snap ring is not aligned with the spring retainer claw.

NOTICE:

- **Stop the press when the spring seat is lowered to the place 1 to 2 mm (0.039 to 0.078 in.) from the snap ring groove.**
- **This prevents the spring seat from being deformed.**

AX

FORWARD CLUTCH

COMPONENTS

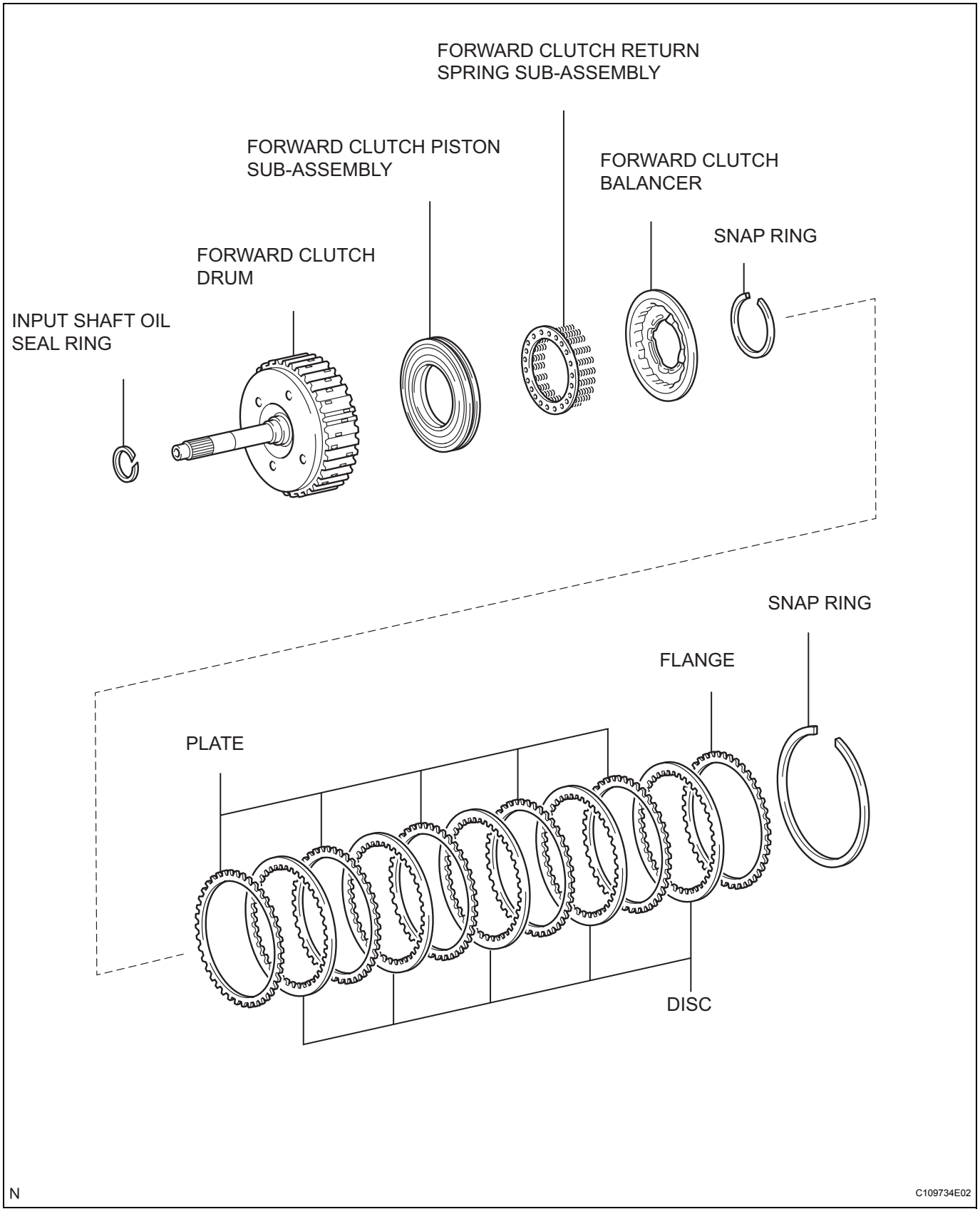

AX

DISASSEMBLY

1. INSPECT PACK CLEARANCE OF FORWARD CLUTCH

HINT:

(See page AX-247)

2. REMOVE FORWARD MULTIPLE DISC CLUTCH DISC

(a) Using a screwdriver, remove the snap ring.

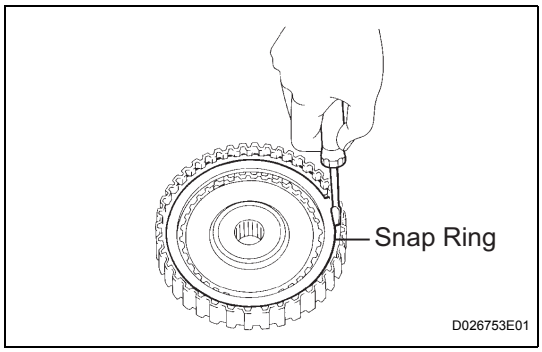

(b) Remove the flange, 5 discs and 5 plates from the input shaft assembly.

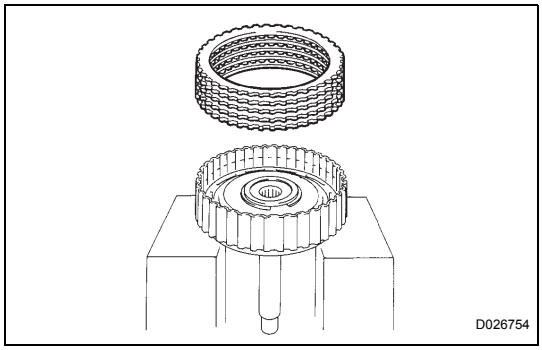

3. REMOVE FORWARD CLUTCH RETURN SPRING SUB-ASSEMBLY

(a) Place SST on the spring retainer and compress the return spring with a press.

(b) Using a snap ring expander, remove the snap ring.

NOTICE:

- **Stop the press when the spring seat is lowered 1 to 2 mm (0.039 to 0.078 in.) from the snap ring groove, preventing the spring seat from being deformed.**
- **Do not expand the snap ring excessively.**

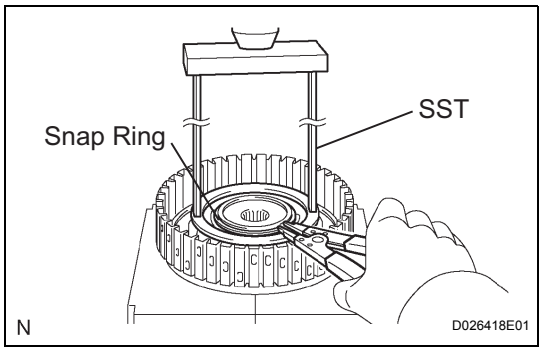

(c) Remove the clutch balancer from the input shaft.

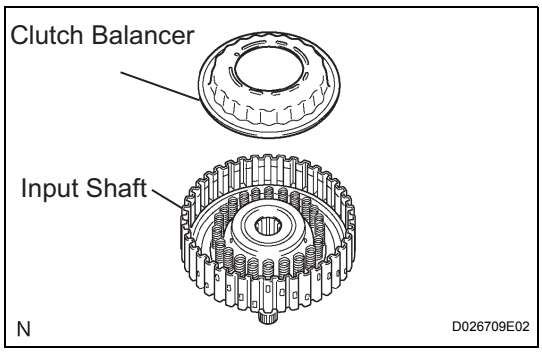

AX

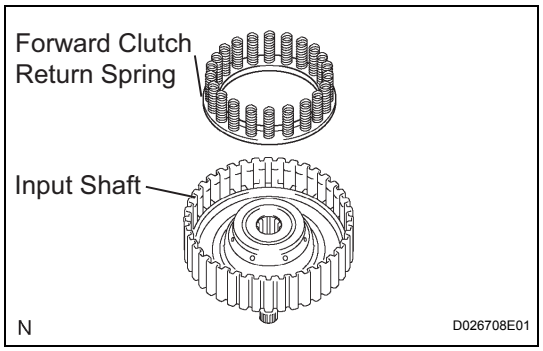

(d) Remove the forward clutch return spring from the input shaft.

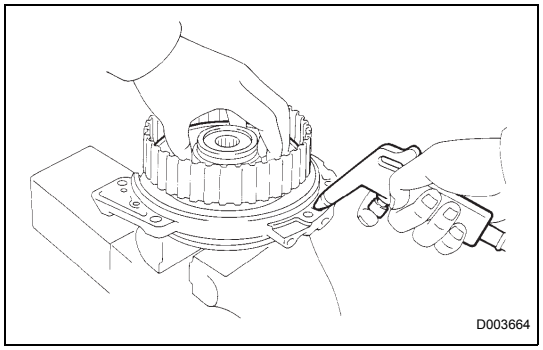

4. REMOVE FORWARD CLUTCH RETURN SPRING SUB-ASSEMBLY

(a) Place the forward clutch drum onto the oil pump.

(b) Holding the forward clutch piston by hand, apply compressed air (392 kPa, 4.0 kgf/cm^2, 57 psi) to the oil pump to remove the forward clutch piston.
HINT:
When the piston cannot be removed as it is slanted, blow air again with the protruding side pushed, or remove the piston using the needle nose pliers with vinyl tape on the tip.

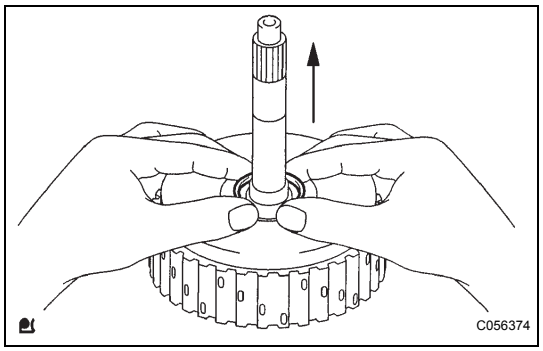

5. REMOVE INPUT SHAFT OIL SEAL RING

(a) Remove the input shaft oil seal ring from the input shaft.

AX

INSPECTION

1. INSPECT PACK CLEARANCE OF FORWARD CLUTCH

(a) Install the forward clutch on the oil pump.
NOTICE:
Be careful not to damage the oil seal ring of oil pump.

(b) Using a dial indicator, measure the forward clutch pack clearance while applying and releasing compressed air (392 kPa, 4.0 kgf/cm^2, 57 psi).
Pack clearance:
1.00 to 1.25 mm (0.0394 to 0.4921 in.)
If the clearance is not as specified, inspect the discs, plates and flange.
HINT:
If the opening is large, cover it with a shop rug or a piece of cloth to prevent the compressed air from being released.

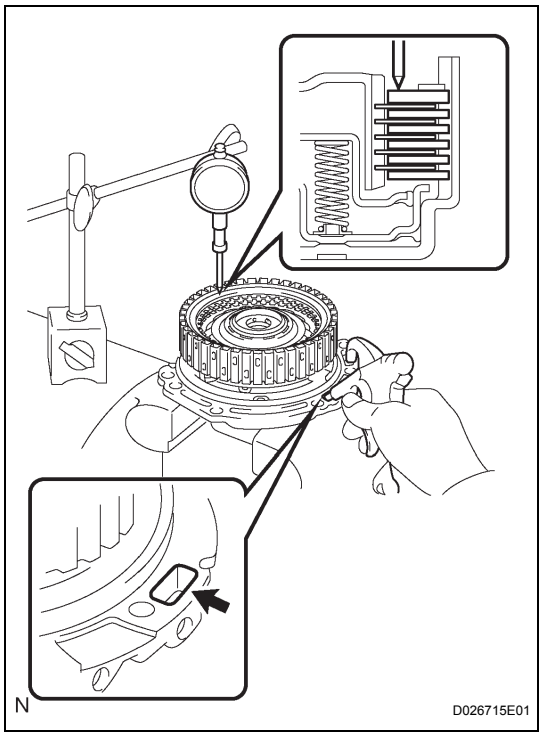

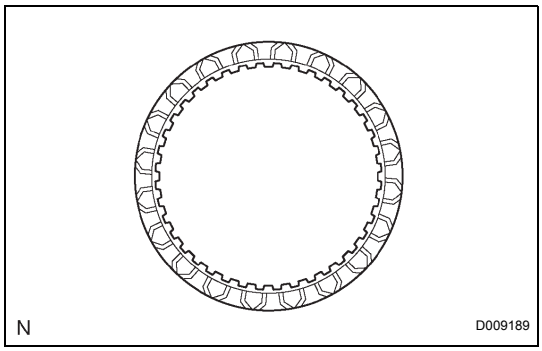

2. INSPECT FORWARD MULTIPLE DISC CLUTCH DISC

(a) Check if the sliding surface of the disc, plate and flange are worn or burnt.
If necessary, replace them.
HINT:
- If the lining of the disc comes off or discolors, or if a part of the groove is worn, replace all discs.
- Before installing new discs, immerse them in ATF for at least 15 minutes.

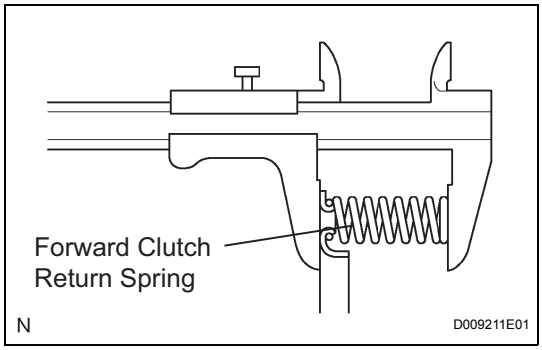

3. INSPECT FORWARD CLUTCH RETURN SPRING SUB-ASSEMBLY

(a) Using vernier calipers, measure the free length of the spring together with the spring seat.
Standard free length:
26.74 mm (1.0528 in.)

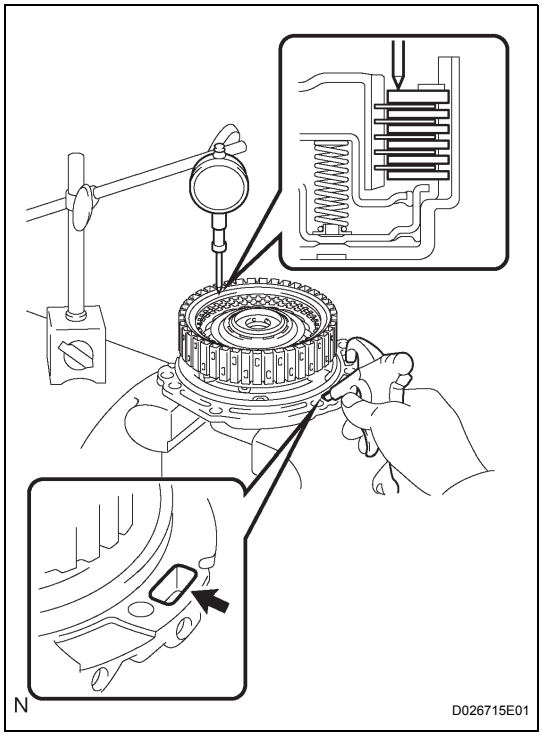

4. INSPECT PACK CLEARANCE OF FORWARD CLUTCH

(a) Using a dial indicator, measure the forward clutch pack clearance while applying and releasing compressed air (392 kgf/cm^2, 4.0 kPa, 57 psi).
Pack clearance:
1.00 to 1.25 mm (0.0394 to 0.4921 in.)
If the piston stroke is less than the minimum, parts may be assembled incorrectly. Check and reassemble the parts again.
If the clearance is not as specified, select another flange.
HINT:
There are 5 different thicknesses of flanges available.
Flange thickness: mm (in.)

No.	Thickness	No.	Thickness
1	3.00 (0.1181)	4	3.45 (0.1358)
2	3.15 (0.1240)	5	3.60 (0.1417)
3	3.30 (0.1299)	-	-

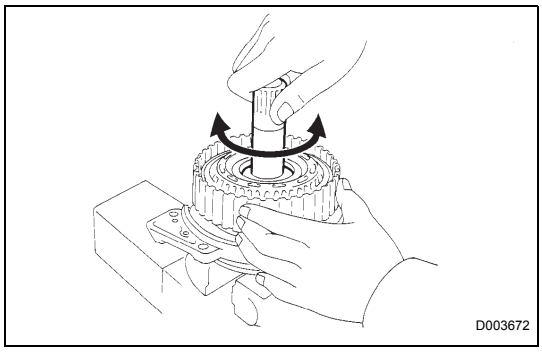

5. INSPECT FORWARD MULTIPLE DISC CLUTCH DISC

(a) Check if the disc lightly rotates when rotating the forward clutch assembly after inserting the multiple disc clutch into it.
NOTICE:
Do not place the forward clutch assembly in a vise.

AX

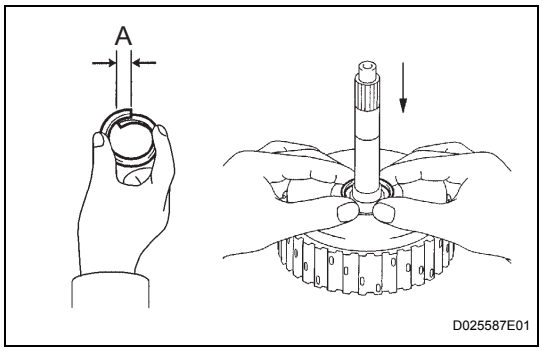

REASSEMBLY

1. INSTALL INPUT SHAFT OIL SEAL RING

(a) Compress a new input shaft oil seal ring from both sides to reduce dimension A.
Dimension A:
5 mm (0.197 in.)

(b) Coat the oil seal ring with ATF and install it to the input shaft.
NOTICE:
Do not expand the end gap of the oil seal ring too much. Fix the hooks firmly.

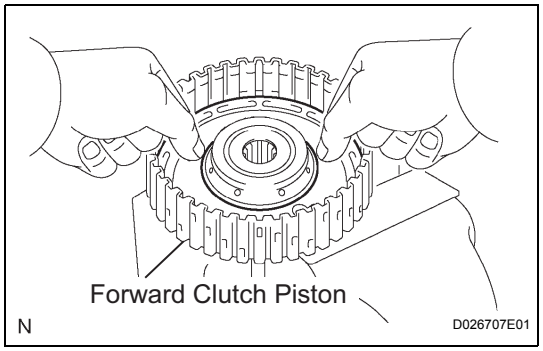

2. INSTALL FORWARD CLUTCH PISTON SUB-ASSEMBLY

(a) Coat the forward clutch piston with ATF, and install it to the input shaft.
NOTICE:
Be careful not to damage the lip of the forward clutch piston.

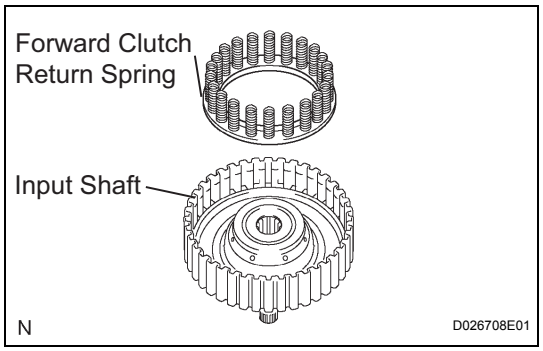

3. INSTALL FORWARD CLUTCH RETURN SPRING SUB-ASSEMBLY

(a) Install the return spring to the input shaft.
NOTICE:
Installing the spring sub-assembly, check that all of the springs are fit in the piston correctly.

(b) Coat the clutch balancer with ATF.

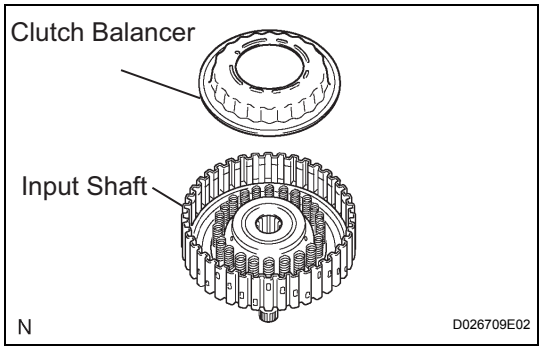

(c) Install the clutch balancer to the input shaft.
NOTICE:
- **Be careful not to damage the lip of the forward clutch balancer.**
- **Make sure that the clutch balancer is not pinched and that there are no other defects at the lip.**
- **Apply sufficient ATF to the sealing lip before installation.**

AX

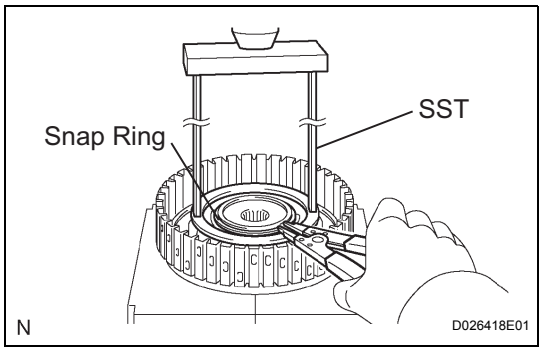

(d) Place SST on the clutch balancer, and compress the clutch balancer with a press.
SST 09387-00020

(e) Install the snap ring with a snap ring expander.

(f) Be sure that the end gap of the snap ring is not aligned with the spring retainer claw.
NOTICE:
- **Stop the press when the spring seat is lowered to the place 1 to 2 mm (0.039 to 0.078 in.) from the snap ring groove.**
- **This prevents the spring seat from being deformed.**
- **Do not expand the snap ring excessively.**

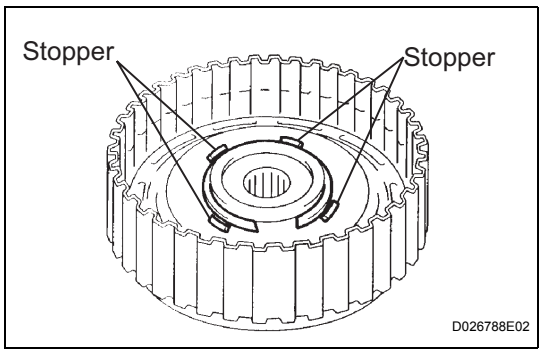

(g) Set the end gap of the snap ring in the piston as shown in the illustration.
NOTICE:
The end gap of the snap ring should not align with any of the stoppers.

4. INSTALL FORWARD MULTIPLE DISC CLUTCH DISC

(a) Coat the 5 discs with ATF.

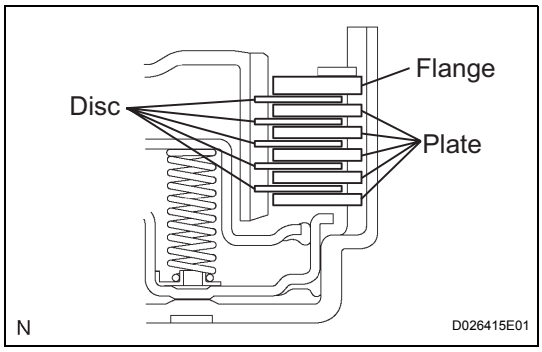

(b) Install the 5 plates, 5 discs and flange input shaft.
NOTICE:
Make sure that the plates, discs, and flange are installed as shown in the illustration.

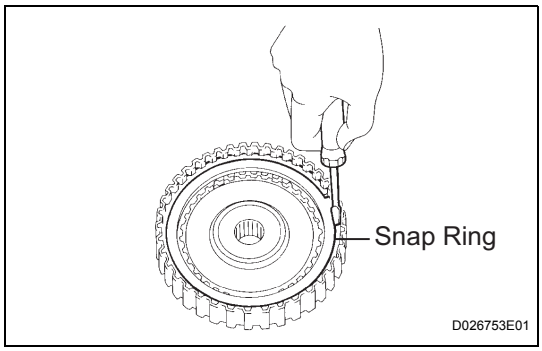

(c) Using a screwdriver, install the snap ring.

(d) Check that the end gap of the snap ring is not aligned with one of the cutouts.
NOTICE:
The snap ring should be fully engaged in the groove of the drum.

5. INSPECT PACK CLEARANCE OF FORWARD CLUTCH
HINT:
(See page AX-248)

6. INSPECT FORWARD MULTIPLE DISC CLUTCH DISC
HINT:
(See page AX-248)

DIRECT CLUTCH

COMPONENTS

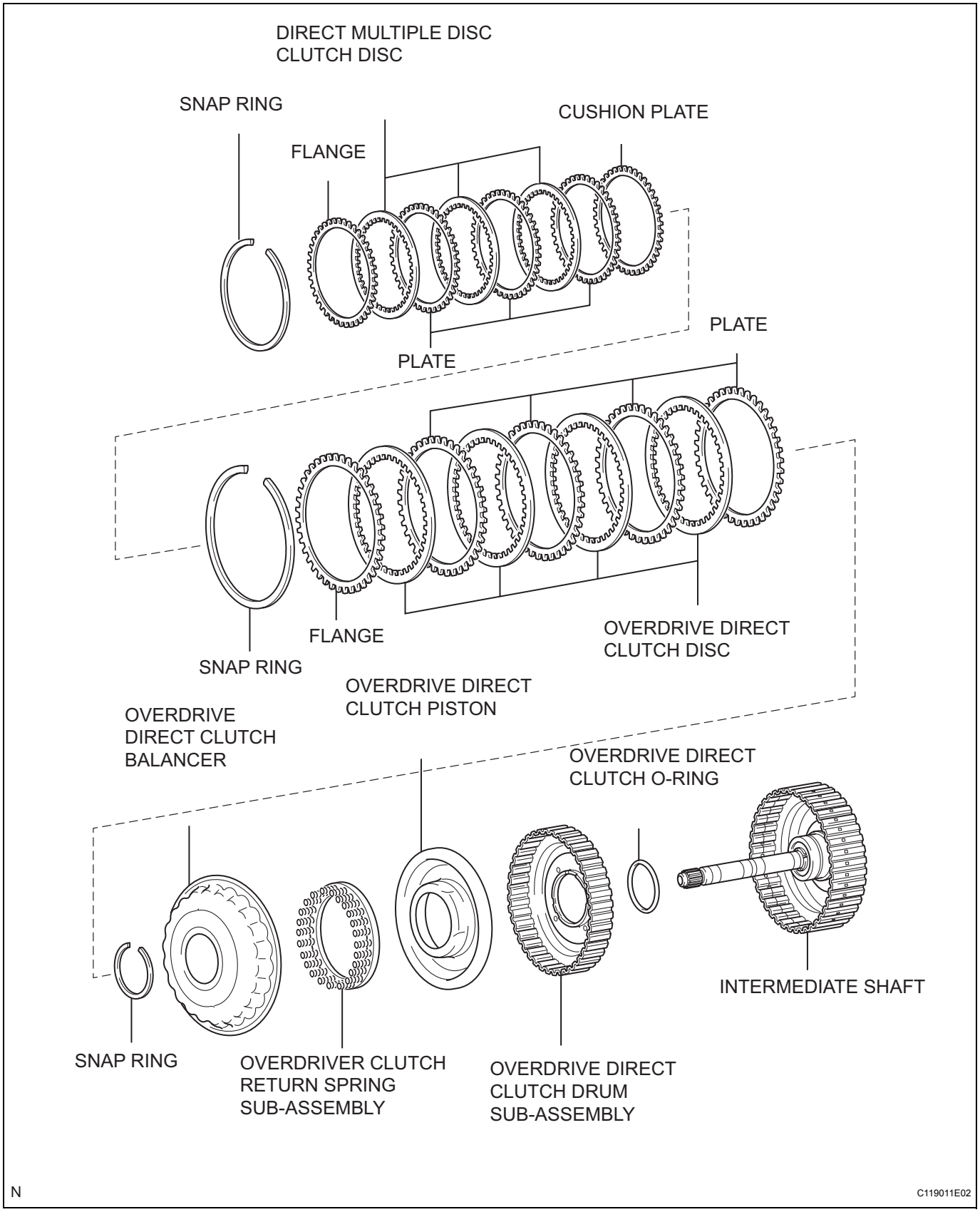

AX

DISASSEMBLY

1. INSPECT PACK CLEARANCE OF REVERSE CLUTCH

HINT:

(See page AX-254)

2. INSPECT PACK CLEARANCE OF DIRECT CLUTCH AND OVERDRIVE CLUTCH

HINT:

(See page AX-254)

3. REMOVE DIRECT MULTIPLE DISC CLUTCH DISC

(a) Using a screwdriver, remove the snap ring from the intermediate shaft.

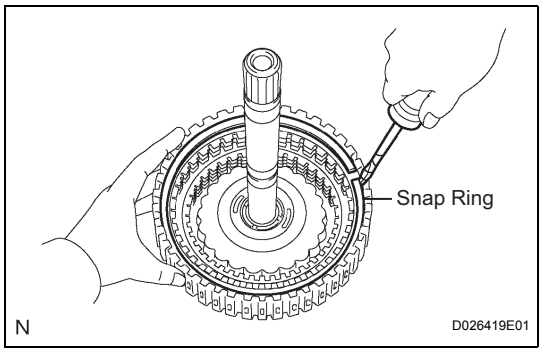

(b) Remove the flange, 3 discs, 3 plates and cushion plate from the intermediate shaft.

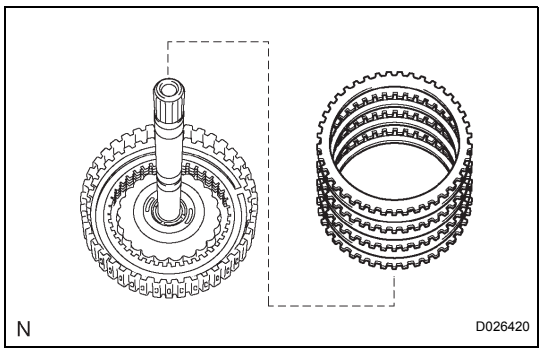

AX

4. REMOVE OVERDRIVE DIRECT CLUTCH DISC

(a) Using a screwdriver, remove the snap ring from the intermediate shaft.

(b) Remove the flange, 4 discs and 4 plates from the intermediate shaft.

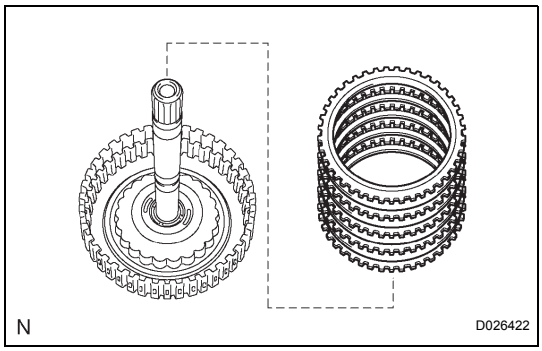

5. REMOVE OVERDRIVE CLUTCH RETURN SPRING SUB-ASSEMBLY

(a) Place SST on the clutch balancer and compress the spring with a press.

SST 09387-00020

(b) Using a snap ring expander, remove the snap ring from the direct clutch drum.

NOTICE:

- **Stop the press when the spring seat is lowered to the place 1 to 2 mm (0.039 to 0.078 in.) from the snap ring groove.**

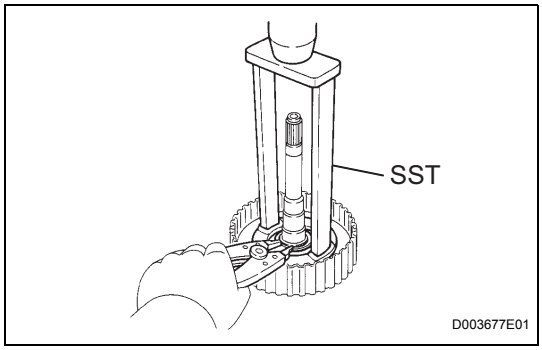

- **This prevents the spring seat from being deformed.**
- **Do not expand the snap ring excessively.**

(c) Remove the clutch balancer from the direct clutch drum.

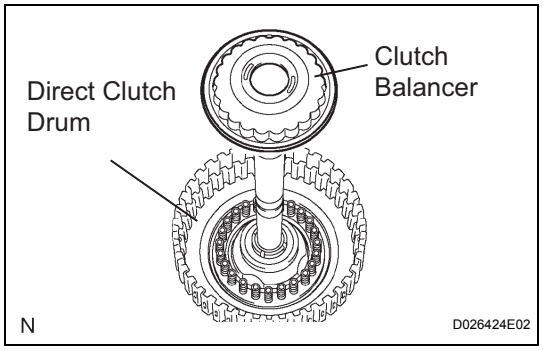

(d) Remove the overdrive clutch return spring from the direct clutch drum.

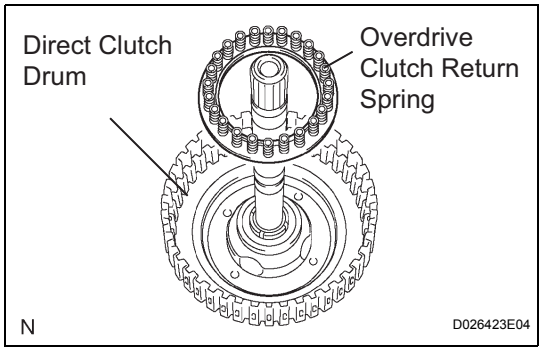

6. REMOVE OVERDRIVE DIRECT CLUTCH PISTON

(a) Install the intermediate shaft on the transaxle rear cover.

(b) Holding the direct clutch piston with your hand, apply compressed air (392 kPa, 4.0 kgf/cm^2, 57 psi) to the transaxle rear cover to remove the direct clutch piston.

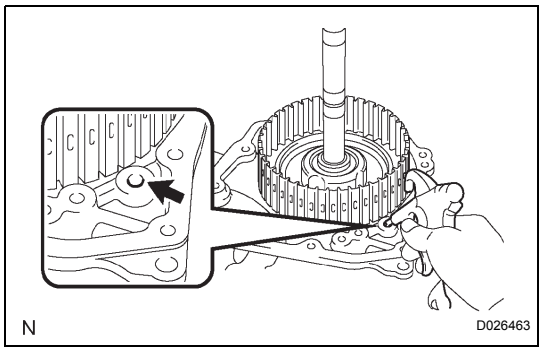

7. REMOVE OVERDRIVE DIRECT CLUTCH DRUM SUB-ASSEMBLY

(a) Holding the direct clutch drum by hand, apply compressed air (392 kPa, 4.0 kgf/cm^2, 57 psi) to the transaxle rear cover to remove the direct clutch drum.

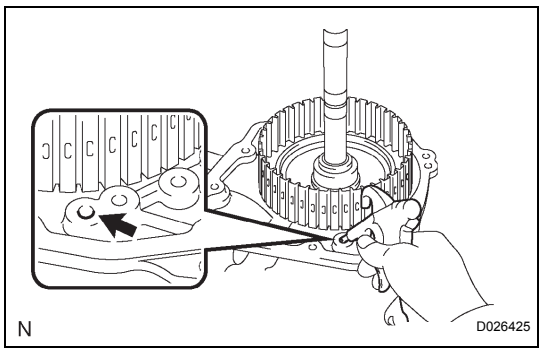

AX

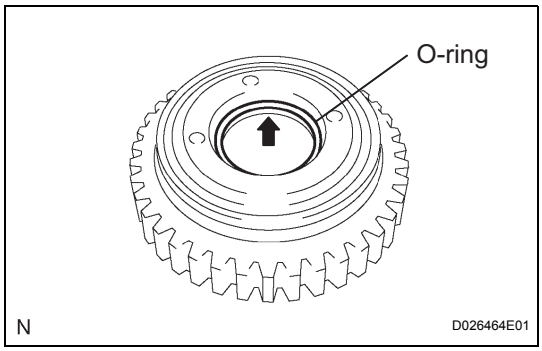

8. REMOVE OVERDRIVE DIRECT CLUTCH O-RING

(a) Using a screwdriver, remove the O-ring from the direct clutch drum.

INSPECTION

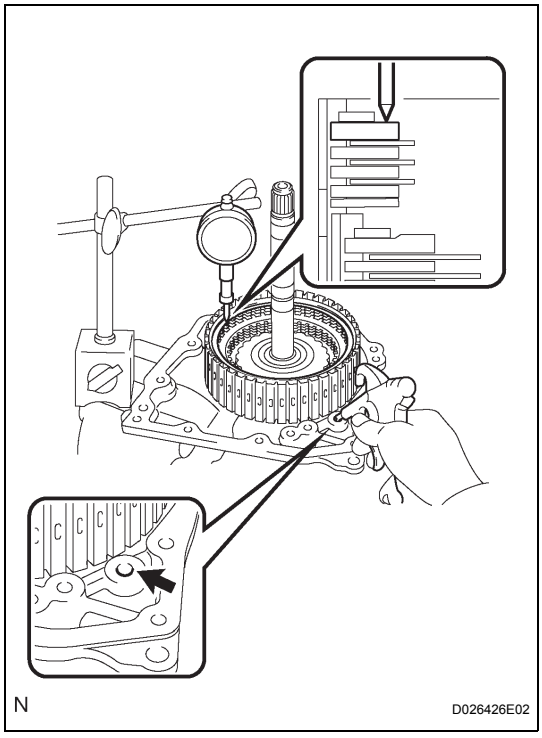

1. INSPECT PACK CLEARANCE OF REVERSE CLUTCH

(a) Install the intermediate shaft and needle roller bearing onto the transaxle rear cover.

(b) Using a dial indicator, measure the reverse clutch pack clearance while applying and releasing compressed air (392 kPa, 4.0 kgf/cm^2, 57 psi).

Pack clearance:

0.60 to 0.82 mm (0.02362 to 0.03228 in.)

If the pack clearance is not as specified, inspect the discs, plates and flange.

AX

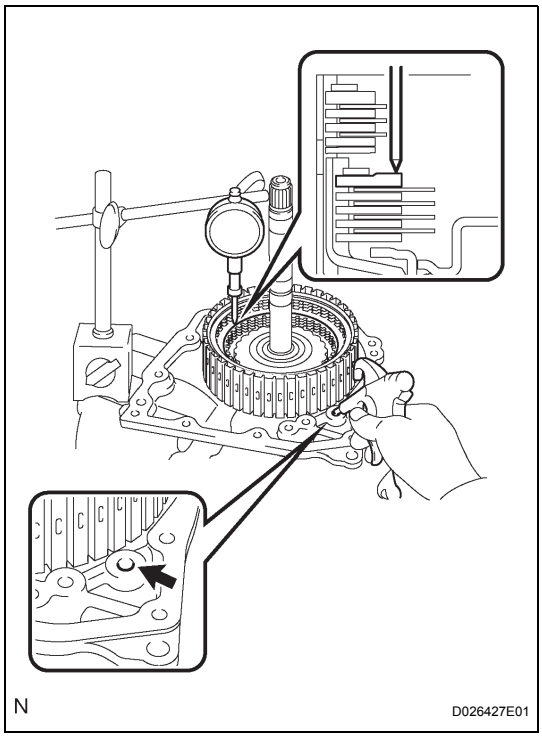

2. INSPECT PACK CLEARANCE OF DIRECT CLUTCH AND OVERDRIVE CLUTCH

(a) Using a dial indicator, measure the direct clutch and overdrive clutch pack clearance while applying and releasing compressed air (392 kPa, 4.0 kgf/cm^2, 57 psi).

Pack clearance:

0.61 to 0.83 mm (0.02401 to 0.03268 in.)

If the pack clearance is not as specified, inspect the discs, plates and flange.

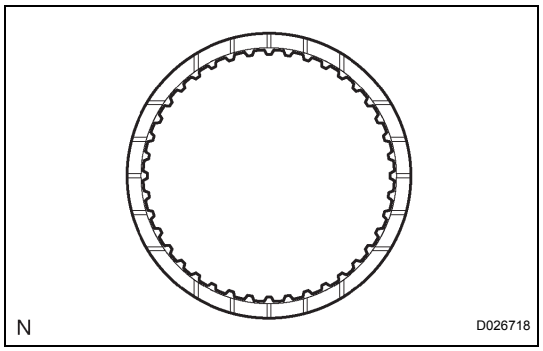

3. INSPECT DIRECT MULTIPLE DISC CLUTCH DISC

(a) Check if the sliding surfaces of the disc, plate and flange are worn or burnt.
If necessary, replace them.
HINT:
- If the lining of the disc comes off or discolors, or if a part of the groove is worn, replace all discs.
- Before installing new discs, immerse them in ATF for at least 15 minutes.

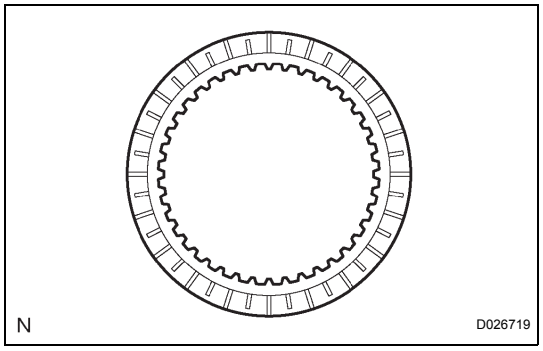

4. INSPECT OVERDRIVE DIRECT CLUTCH DISC

(a) Check if the sliding surface of the disc, plate and flange are worn or burnt.
If necessary, replace them.
HINT:
- If the lining of the disc comes off or discolors, or if a part of the groove is worn, replace all discs.
- Before installing new discs, immerse them in ATF for at least 15 minutes.

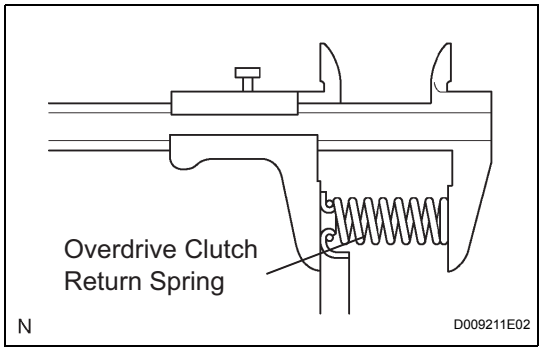

5. INSPECT OVERDRIVE CLUTCH RETURN SPRING SUB-ASSEMBLY

(a) Using vernier calipers, measure the free length of the spring together with the spring seat.
Standard free length:
25.91 mm (1.0201 in.)

AX

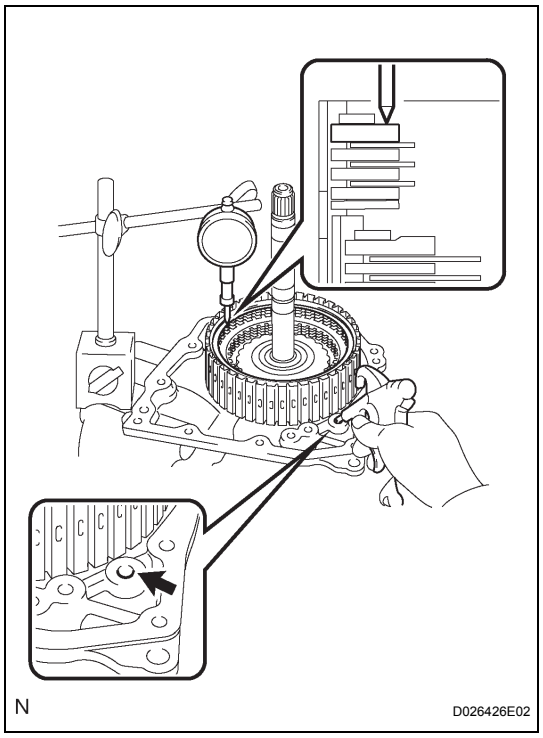

6. INSPECT PACK CLEARANCE OF REVERSE CLUTCH

(a) Install the intermediate shaft onto the transaxle rear cover.

(b) Using a dial indicator, measure the direct clutch pack clearance while applying and releasing compressed air (392 kPa, 4.0 kgf/cm2, 57 psi).
Clearance:
0.60 to 0.82 mm (0.02362 to 0.03228 in.)
If the pack clearance is less than the minimum, parts may have been assembled incorrectly, so check and reassemble again. If the clearance is not as specified, select another flange.
HINT:
There are 7 flanges of different thickness.
Flange thickness: mm (in.)

No.	Thickness	No.	Thickness
1	3.0 (0.118)	5	3.4 (0.134)
2	3.1 (0.122)	6	3.5 (0.138)
3	3.2 (0.126)	7	3.6 (0.142)
4	3.3 (0.130)	-	-

7. INSPECT PACK CLEARANCE OF DIRECT CLUTCH AND OVERDRIVE CLUTCH

(a) Using a dial indicator, measure the direct clutch & overdrive clutch pack clearance while applying and releasing compressed air (392 kPa, 4.0 kgf/cm^2, 57 psi).

Clearance:

0.61 to 0.83 mm (0.02401 to 0.03268 in.)

If the pack clearance is less than the minimum, parts may have been assembled incorrectly, so check and reassemble again. If the clearance is not as specified, select another flange.

HINT:

There are 7different thicknesses of flanges available.

Flange thickness: mm (in.)

No.	Thickness	No.	Thickness
0	2.5 (0.098)	4	2.9 (0.114)
1	2.6 (0.102)	5	3.0 (0.118)
2	2.7 (0.106)	6	3.1 (0.122)
3	2.8 (0.110)	-	-

(b) Check that the disc rotates when rotating the disc after inserting the rear planetary sun gear.

NOTICE:

Do not place the rear planetary sun gear in a vise.

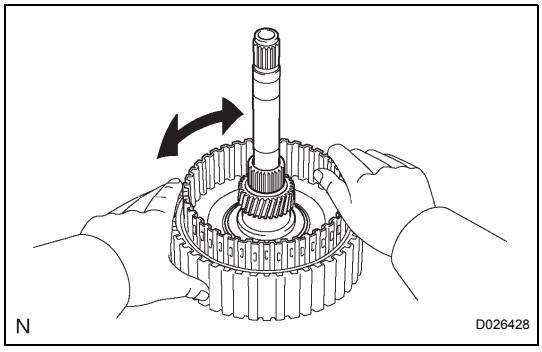

AX

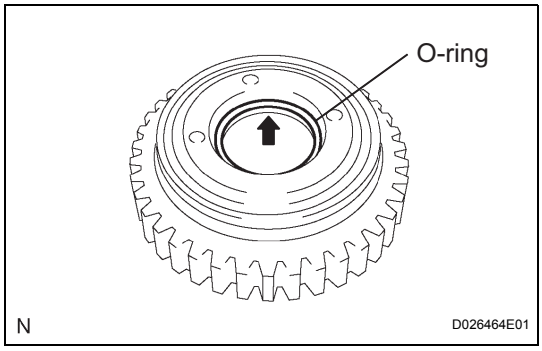

REASSEMBLY

1. INSTALL OVERDRIVE DIRECT CLUTCH O-RING

(a) Coat an O-ring with ATF, and install it to the direct clutch drum.

NOTICE:

Make sure that the O-ring is not twisted or pinched when it is installed.

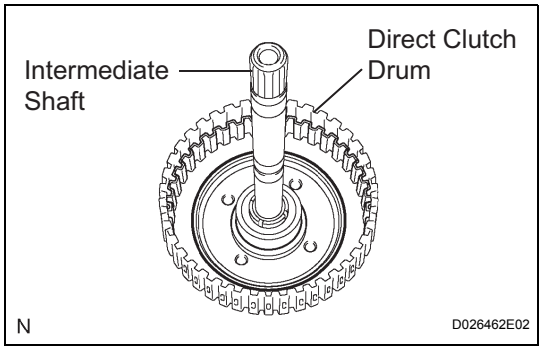

2. INSTALL OVERDRIVE DIRECT CLUTCH DRUM SUB-ASSEMBLY

(a) Coat the direct clutch drum with ATF, and install it to the intermediate shaft.

NOTICE:

- **Be careful not to damage the O-ring.**
- **Be careful not to damage the lip of the direct clutch drum.**

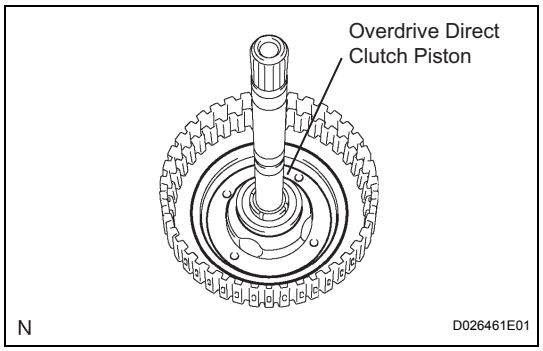

3. INSTALL OVERDRIVE DIRECT CLUTCH PISTON

(a) Coat the overdrive direct clutch piston with ATF, and install it to the direct clutch drum.

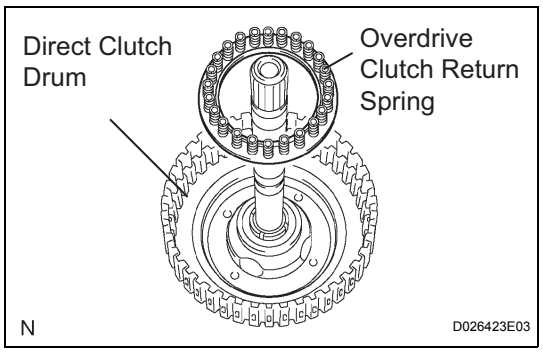

4. INSTALL OVERDRIVE CLUTCH RETURN SPRING SUB-ASSEMBLY

(a) Install the overdrive clutch return spring to the direct clutch drum.

NOTICE:

Installing the spring sub-assembly, check that all of the springs are fit in piston correctly.

(b) Coat the clutch balancer with ATF.

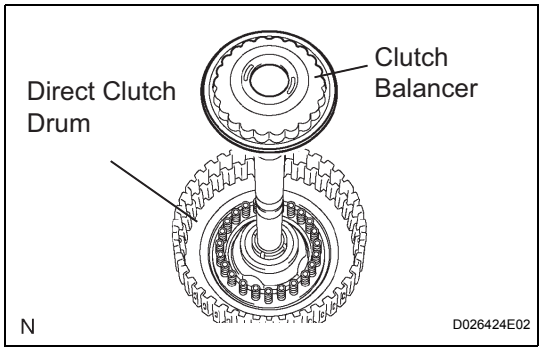

(c) Install the clutch balancer to the direct clutch drum.

NOTICE:

- **Be careful not to damage the lip of the direct clutch balancer.**
- **Make sure that the lip of the seal is not pinched and that it has no other defects.**
- **Apply sufficient ATF to the sealing lip before installing the clutch balancer.**

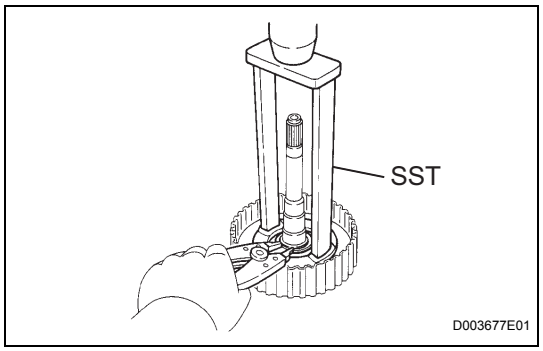

(d) Place SST on the clutch balancer and compress the overdrive clutch return spring with a press.

SST 09387-00020

(e) Using a snap ring expander, install the snap ring to the direct clutch drum.

(f) Be sure that the end gap of the snap ring is not aligned with the spring retainer claw.

NOTICE:

- **Stop the press when the spring seat is lowered to the place 1 to 2 mm (0.039 to 0.078 in.) from the snap ring groove.**
- **This prevents the spring seat from being deformed.**
- **Do not expand the snap ring excessively.**

AX

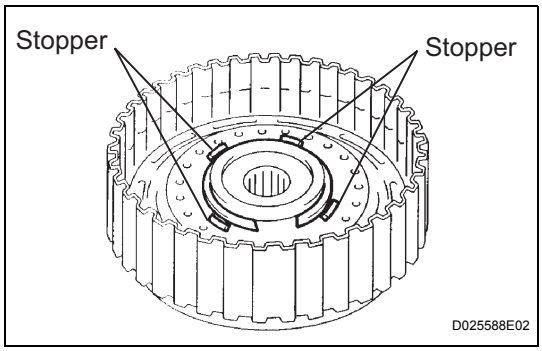

(g) Set the end gap of the snap ring in the piston shown in the illustration.
NOTICE:
The end gap of the snap ring should not align with any of the stoppers.

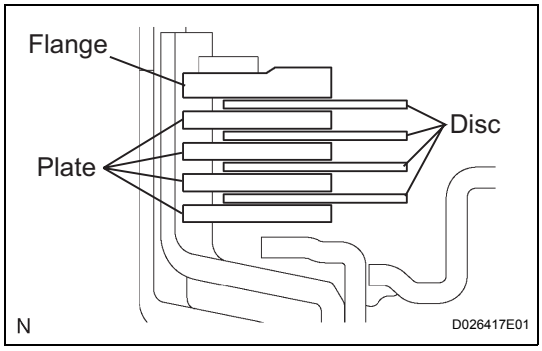

5. INSTALL OVERDRIVE DIRECT CLUTCH DISC
(a) Coat the 4 discs with ATF.
(b) Install the 4 plates, 4 discs and flange to the intermediate shaft.
NOTICE:
Make sure that the plates, discs, and flange are installed as shown in the illustration.

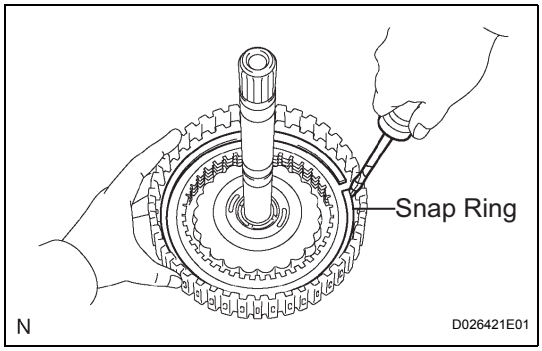

(c) Using a screwdriver, install the snap ring.
(d) Check that the end gap of the snap ring is not aligned with one of the cutouts.
NOTICE:
The snap ring should be fully engaged in the groove of the drum.

AX

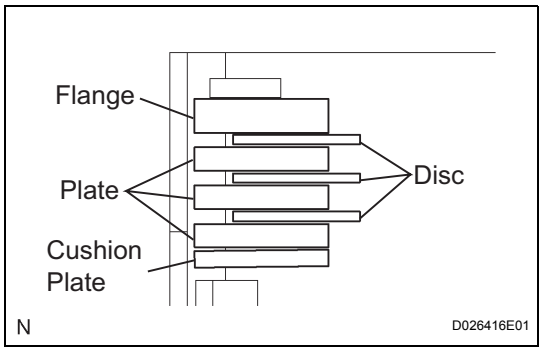

6. INSTALL DIRECT MULTIPLE DISC CLUTCH DISC
(a) Coat the 3 disc with ATF.
(b) Install the cushion plate, 3 plates, 3 disc and flange to the intermediate shaft.
NOTICE:
- **Install the cushion plate with the mark on the white surface facing to plate.**
- **Be careful about the order of discs, plate and flange assembly.**

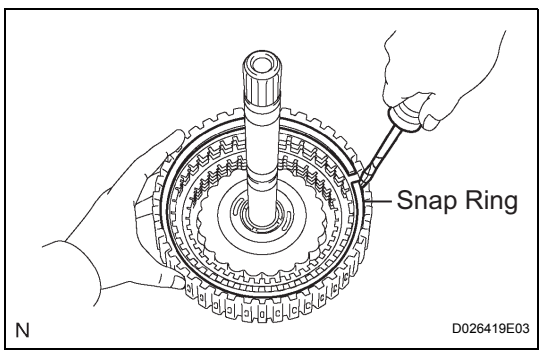

(c) Using a screwdriver, install the snap ling.
(d) Check that the end gap of the snap ling is not aligned with one of the cutouts.
NOTICE:
The slap ring should be fixed certainly in the groove of the drum.

UNDERDRIVE PLANETARY GEAR

COMPONENTS

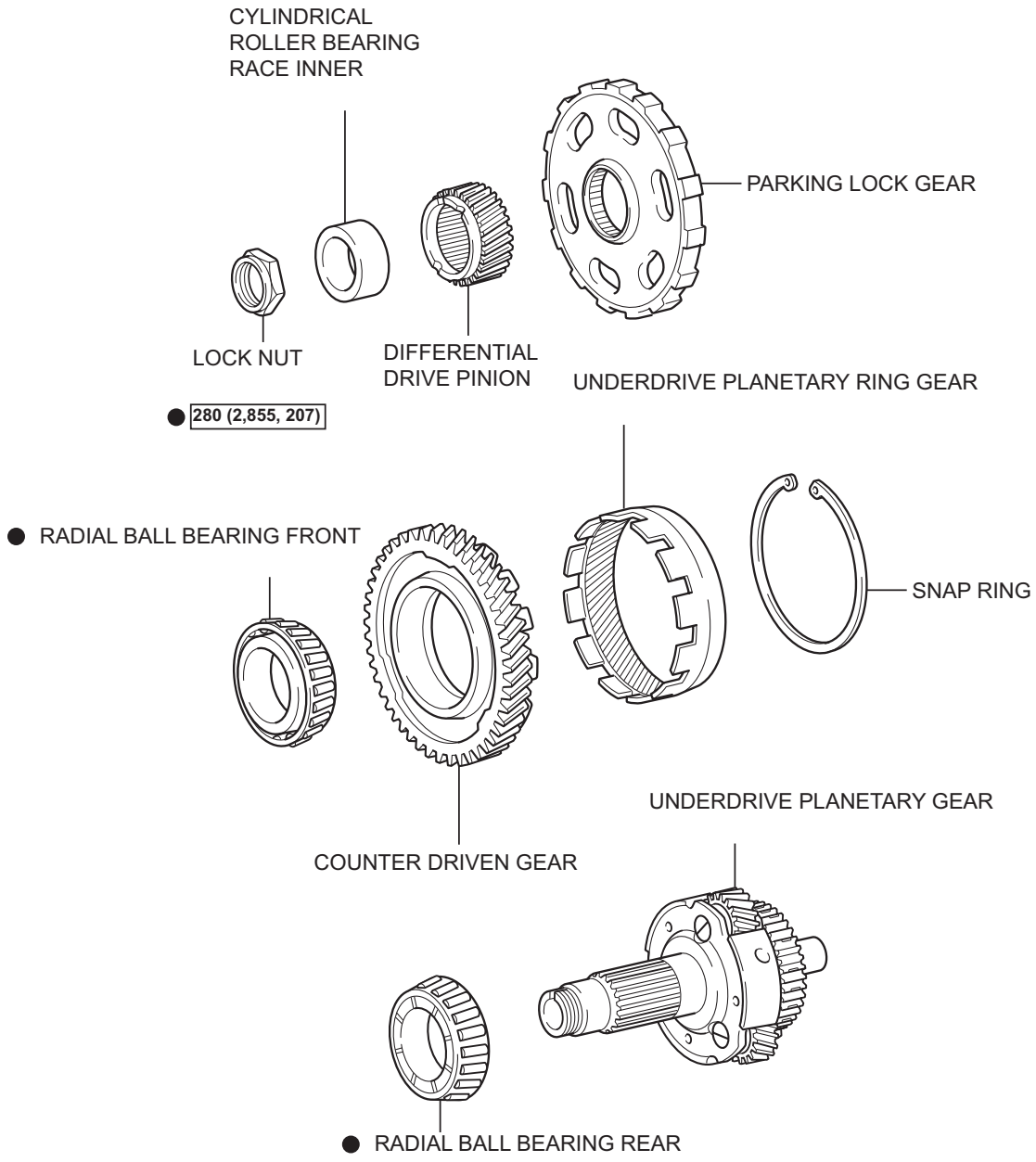

N*m (kgf*cm, ft.*lbf): Specified torque

● Non-reusable part

N

C114868E03

AX

DISASSEMBLY

1. INSPECT UNDERDRIVE PLANETARY GEAR PRELOAD

HINT:

(See page AX-261)

2. REMOVE FRONT PLANETARY GEAR NUT

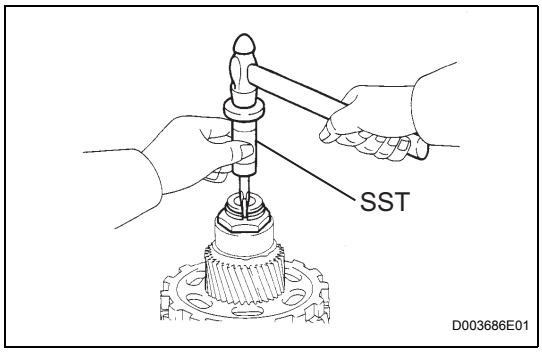

(a) Using SST, loosen the staked part of the lock nut.

SST 09930-00010 (09931-00010, 09931-00020), 09387-00050

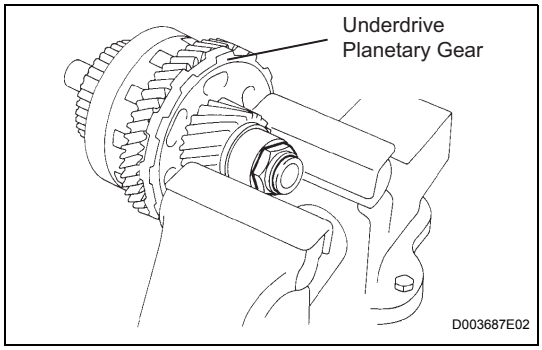

(b) Place the underdrive planetary gear in a soft jaw vise.

NOTICE:

Be careful not to damage the differential drive pinion.

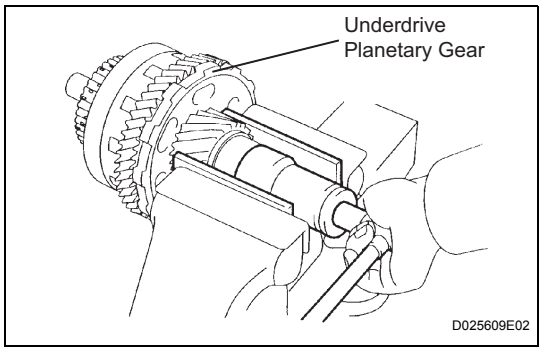

(c) Using a socket wrench, remove the lock nut.

3. REMOVE CYLINDRICAL ROLLER BEARING RACE INNER

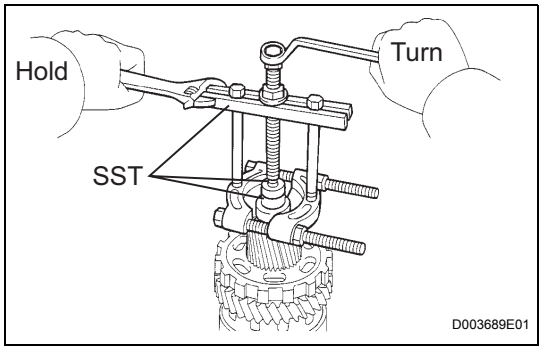

(a) Using SST, remove the cylindrical roller bearing race inner.

SST 09950-00020, 09950-00030, 09950-60010 (09951-00320, 09957-04010)

AX

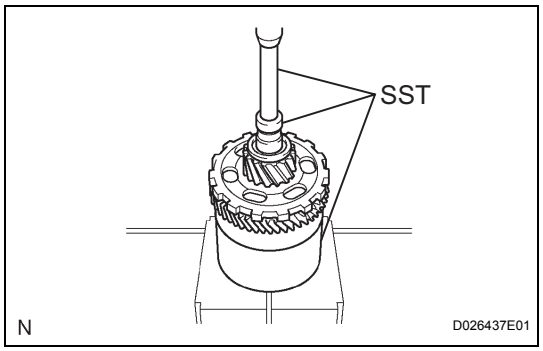

4. REMOVE UNDERDRIVE PLANETARY GEAR ASSEMBLY

(a) Using SST and a press, remove the differential drive pinion, parking lock gear, counter driven gear with underdrive planetary ring gear and radial ball bearing front.

SST 09950-60010 (09951-00320), 09387-00050, 09950-00020, 09950-00030, 09950-40011 (09957-04010)

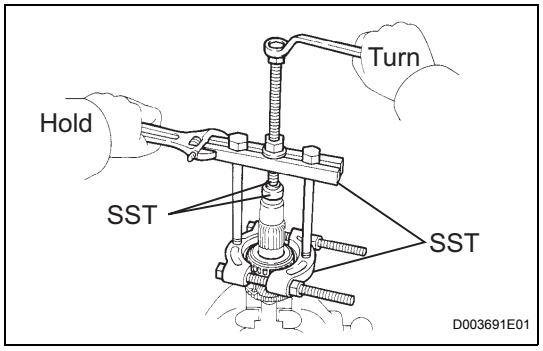

(b) Place the underdrive planetary gear in a soft jaw vise.

(c) Using SST, remove the radial ball bearing rear from the underdrive planetary gear.

SST 09950-60010 (09951-00320), 09950-00030, 09950-40011 (09957-04010)

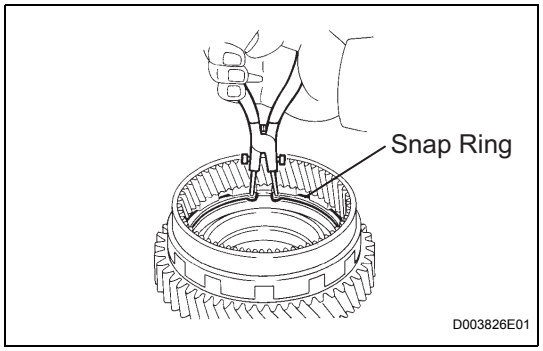

5. REMOVE UNDERDRIVE PLANETARY RING GEAR

(a) Using a snap ring pliers, remove the snap ring.

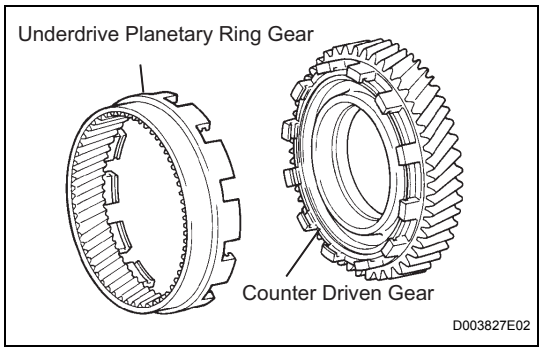

(b) Remove the underdrive planetary ring gear from the counter driven gear.

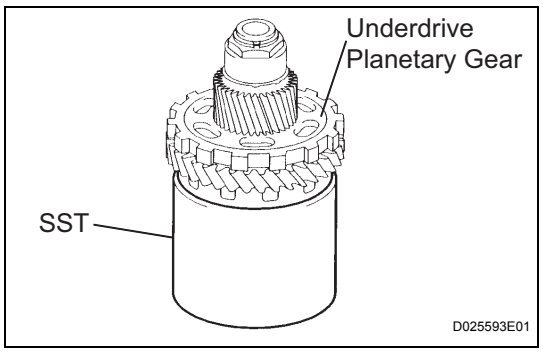

INSPECTION

1. INSPECT UNDERDRIVE PLANETARY GEAR PRELOAD

(a) Using SST, fix the underdrive planetary gear assembly.

SST 09387-00050

AX

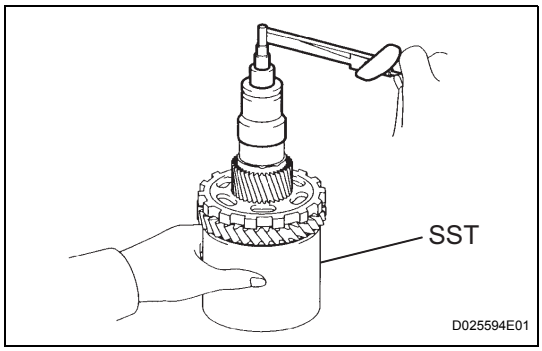

(b) Using SST and a torque wrench, measure the turning torque of the underdrive planetary gear assembly while rotating the torque wrench at 60 rpm.
SST 09387-00050
Turning torque at 60 rpm.:
0.50 to 1.42 N*m (5.1 to 14.5 kgf*cm, 4.4 to 12.6 in.*lbf)
HINT:
Use a torque wrench with a fulcrum length of 160 mm (6.3 in.).

REASSEMBLY

1. INSTALL UNDERDRIVE PLANETARY RING GEAR

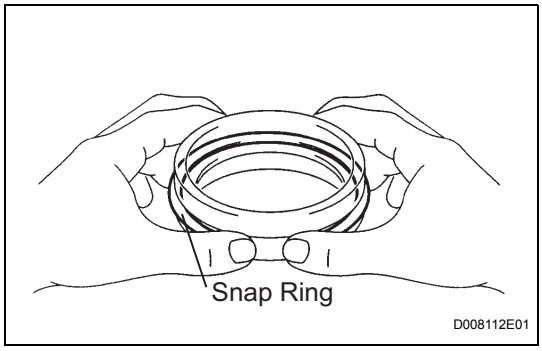

(a) Install a new snap ring to the outer race of the radial ball bearing rear.
HINT:
When replacing the bearing, also replace the counter driven gear with a new one.

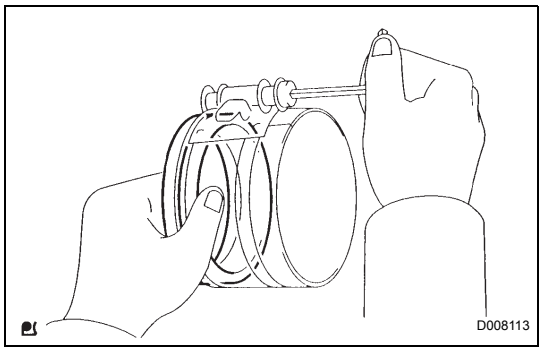

(b) Using a piston ring compressor, squeeze the snap ring.

AX

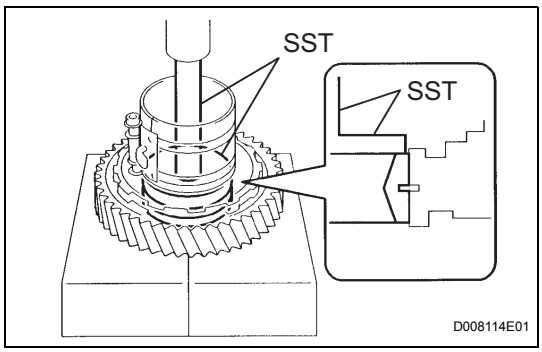

(c) Using SST and a press, press in the outer race of the radial ball bearing rear.
SST 09950-60020 (09951-00890), 09950-70010 (09951-07100)
NOTICE:
Be sure not to damage the snap ring during outer race installation.

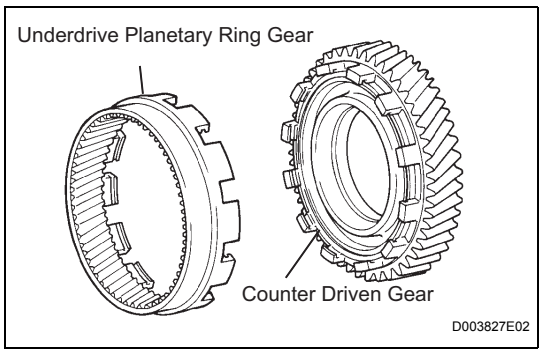

(d) Install the underdrive planetary ring gear to the counter driven gear.

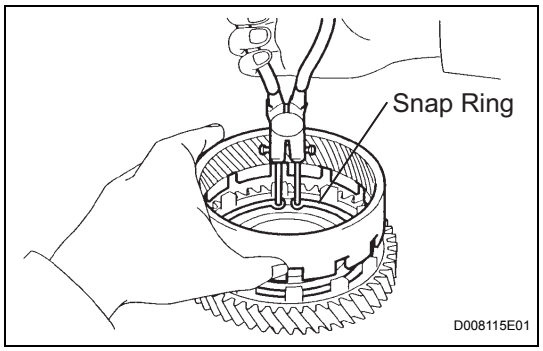

(e) Using a snap ring pliers, install the snap ring.

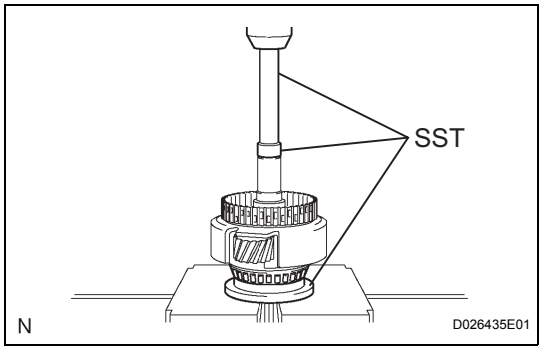

2. INSTALL UNDERDRIVE PLANETARY GEAR ASSEMBLY

(a) Using SST and a press, press the radial ball bearing rear in the underdrive planetary gear.

SST 09502-12010, 09950-60010 (09951-00260), 09950-70010 (09951-07100)

NOTICE:

Press the bearing until it becomes flat at the bottom.

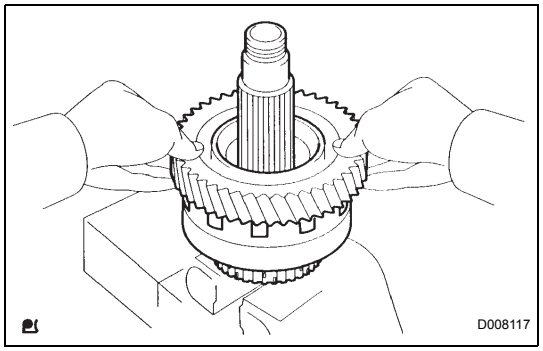

(b) Install the counter driven gear with planetary ring gear to the underdrive planetary gear.

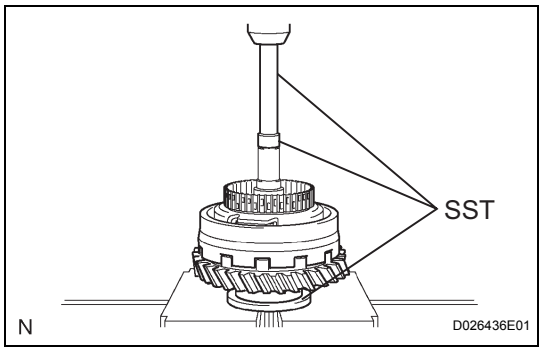

(c) Using SST and a press, press in the radial ball bearing front.

SST 09502-12010, 09950-60010 (09951-00260), 09950-70010 (09951-07100)

NOTICE:

Press the counter driven gear while rotating it.

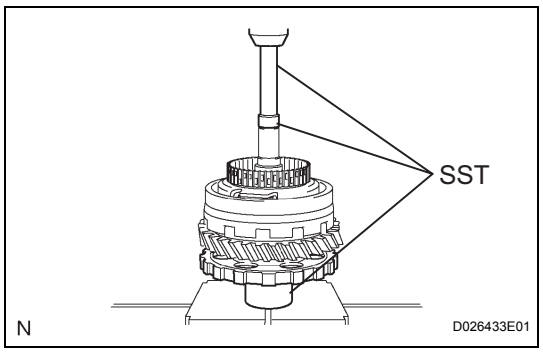

(d) Using SST and a press, press in the parking lock gear.

SST 09502-12010, 09950-60010 (09951-00260), 09950-70010 (09951-07100)

NOTICE:

Press the counter driven gear while rotating it.

AX

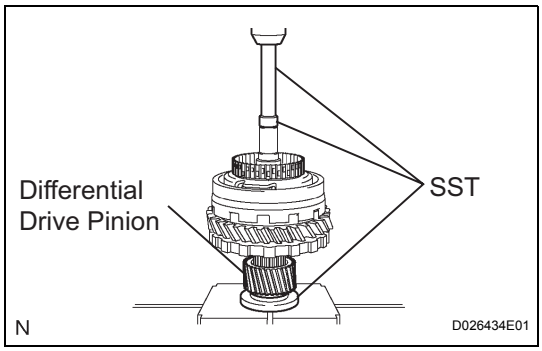

3. INSTALL DIFFERENTIAL DRIVE PINION

(a) Using SST and a press, press the differential drive pinion.

SST 09726-40010, 09950-60010 (09951-00260), 09950-70010 (09951-07100)

NOTICE:

Press the counter driven gear while rotating it.

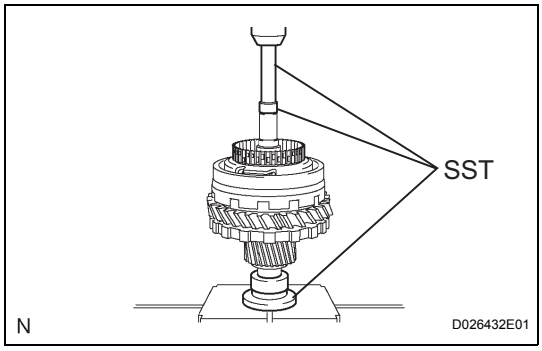

4. INSTALL CYLINDRICAL ROLLER BEARING RACE INNER

(a) Using SST and a press, press the cylindrical roller bearing race inner.

SST 09506-35010, 09950-60010 (09951-00260), 09950-70010 (09951-07100)

NOTICE:

Press the counter driven gear while rotating it.

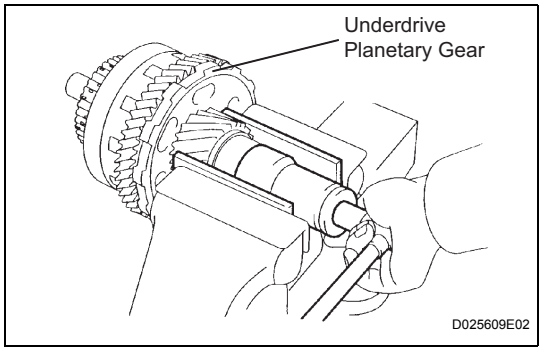

5. INSTALL FRONT PLANETARY GEAR NUT

(a) Place the underdrive planetary gear in a soft jaw vise.

NOTICE:

Be careful not to damage the differential drive pinion.

(b) Using a socket wrench, install a new lock nut.

Torque: 280 N*m (2,885 kgf*cm, 207 ft.*lbf)

HINT:

Use a torque wrench with a fulcrum length of 750 mm (29.53 in.).

(c) Using a pin punch and hammer, stake the lock nut.

CAUTION:

Be sure that there are no cracks on the nut.

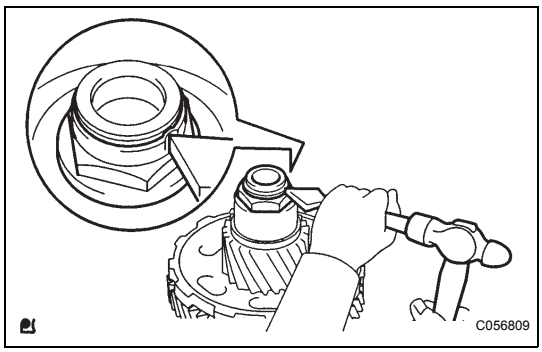

6. INSPECT UNDERDRIVE PLANETARY GEAR PRELOAD

HINT:

(See page AX-261)

AX

UNDERDRIVE CLUTCH

COMPONENTS

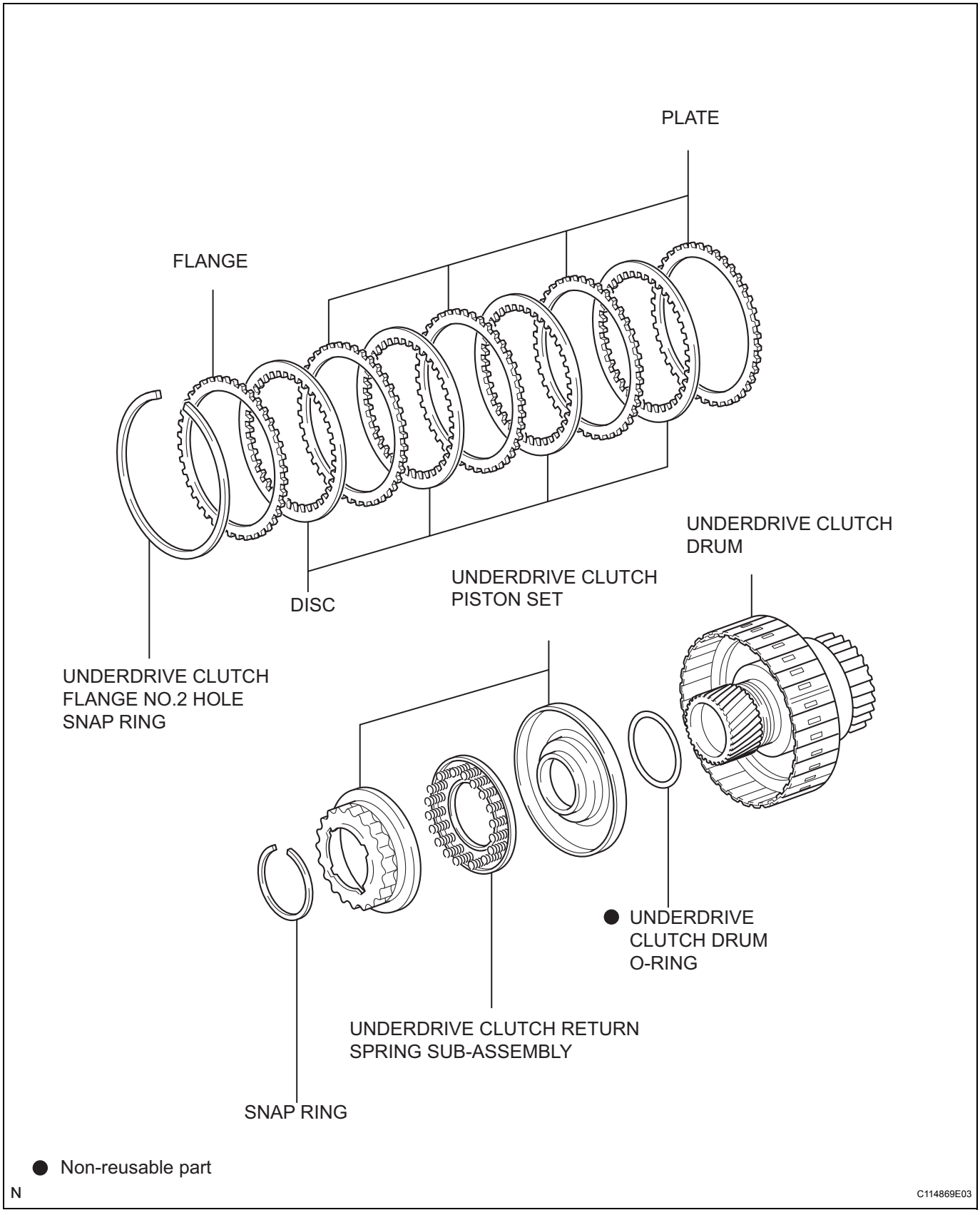

AX

DISASSEMBLY

1. INSPECT UNDERDRIVE PACK CLEARANCE

HINT:

(See page AX-267)

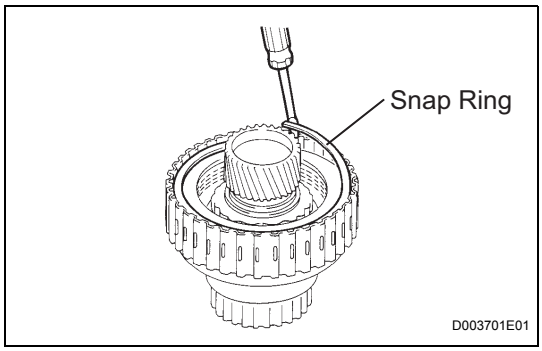

2. REMOVE UNDERDRIVE CLUTCH FLANGE NO.2 HOLE SNAP RING

(a) Using a screwdriver, remove the underdrive clutch flange No.2 snap ring.

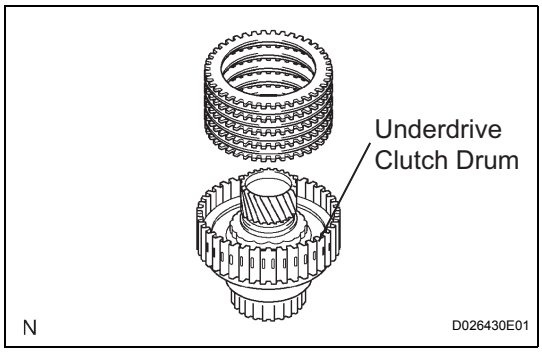

3. REMOVE UNDERDRIVE CLUTCH DISC NO.1

(a) Remove the flange, 4 discs and 4 plates from the underdrive clutch drum.

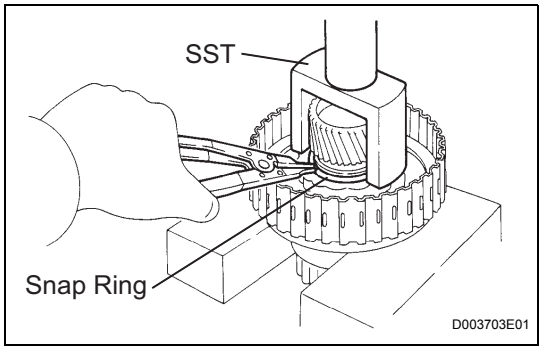

4. REMOVE UNDERDRIVE CLUTCH RETURN SPRING SUB-ASSEMBLY

(a) Place SST on the clutch balancer and compress the spring with a press.

SST 09350-32014

(b) Using a snap ring expander, remove the snap ring.

NOTICE:

- **Stop the press when the spring seat is lowered to the place 1 to 2 mm (0.039 to 0.078 in.) from the snap ring groove.**
- **This prevents the spring seat from being deformed.**
- **Do not expand the snap ring excessively.**

(c) Remove the clutch balancer from the underdrive clutch drum.

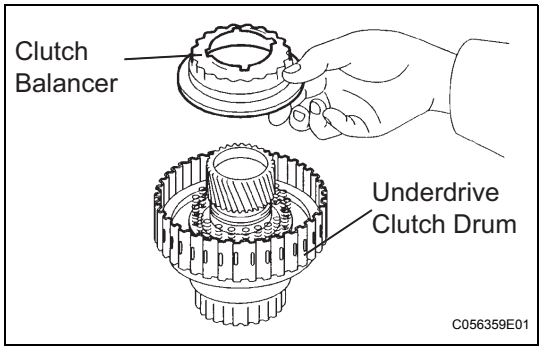

AX

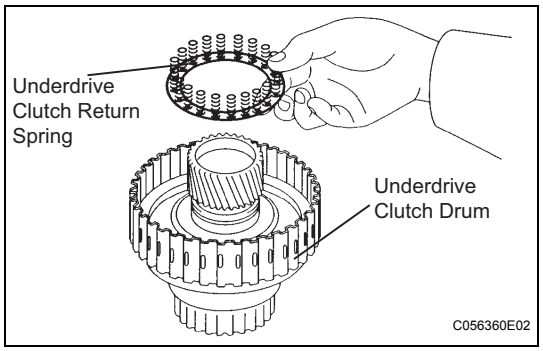

(d) Remove the return spring from the underdrive clutch drum.

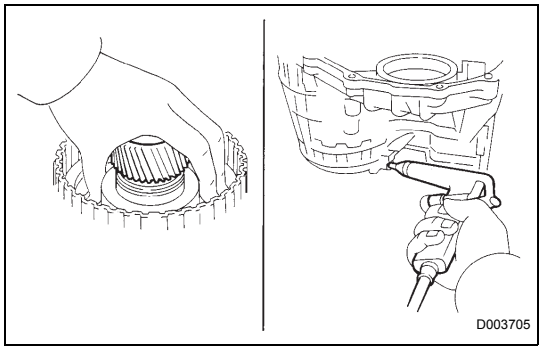

5. REMOVE UNDERDRIVE CLUTCH PISTON SET

(a) Install the underdrive clutch to the transaxle case.
NOTICE:
Be careful not to damage the oil seal ring.

(b) Holding the underdrive clutch piston by hand, apply compressed air (392 kPa, 4.0 kgf/cm^2, 57 psi) to the transaxle case to remove the underdrive clutch piston.

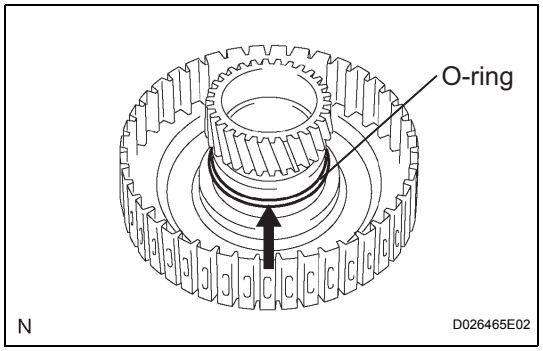

6. REMOVE UNDERDRIVE CLUTCH DRUM O-RING

(a) Using a screwdriver, remove the O-ring from the underdrive clutch drum.

INSPECTION

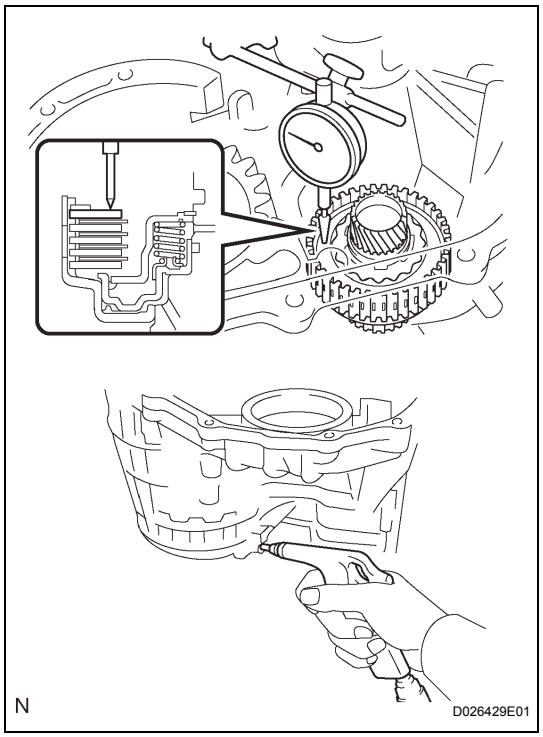

1. INSPECT UNDERDRIVE PACK CLEARANCE

(a) Install the underdrive clutch to the transaxle case.
NOTICE:
Be careful not to damage the oil seal rings.

(b) Install a dial indicator as shown in the illustration.

(c) Measure the underdrive clutch pack clearance while applying and releasing compressed air (392 kPa, 4.0 kgf/cm^2, 57 psi).
Pack clearance:
1.51 to 1.71 mm (0.0594 to 0.0673 in.)
If the pack clearance is not as specified, inspect the discs, plates and flange.
HINT:
There are 5 flanges in different thickness.
Flange thickness: mm (in.)

Mark	Thickness	Mark	Thickness
1	3.0 (0.118)	4	3.6 (0.122)
2	3.2 (0.126)	5	3.8 (0.130)
3	3.4 (0.134)	-	-

AX

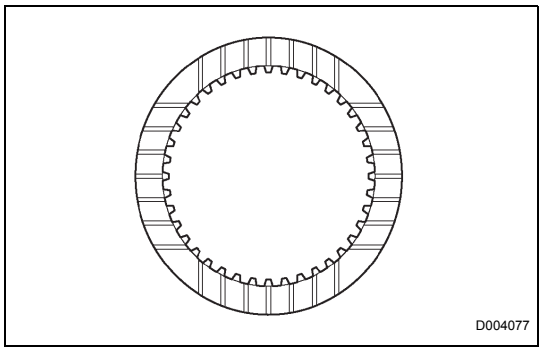

2. INSPECT UNDERDRIVE CLUTCH DISC NO.1

(a) Check if the sliding surface of the disc, plate and flange are worn or burnt. If necessary, replace them.
HINT:
- If the lining of the disc comes off or discolors, or if a part of the groove is worn, replace all discs.
- Before installing new discs, immerse them in ATF for at least 15 minutes.

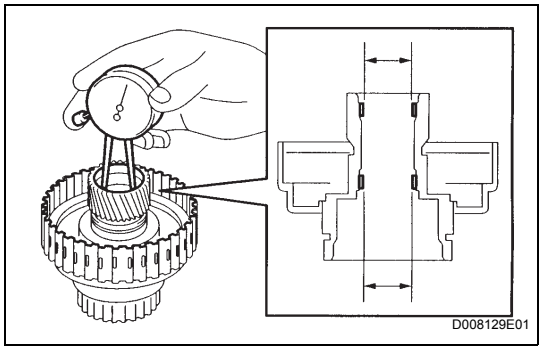

3. INSPECT UNDERDRIVE CLUTCH DRUM SUB-ASSEMBLY

(a) Using a dial indicator, measure the inside diameter of the underdrive clutch drum bushing.
Standard drum bushing:
37.06 to 37.08 mm (1.4591 to 1.4598 in.)
Maximum drum bushing:
37.13 mm (1.4618 in.)
If the inside diameter is greater than the maximum, replace the underdrive clutch drum.

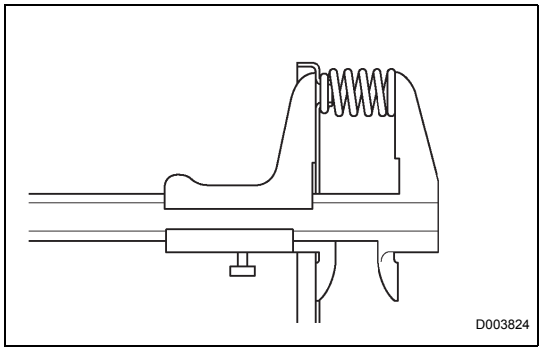

4. INSPECT UNDERDRIVE CLUTCH RETURN SPRING SUB-ASSEMBLY

(a) Using a vernier calipers, measure the free length of the spring together with the spring seat.
Standard free length:
17.14 mm (0.6752 in.)

AX

REASSEMBLY

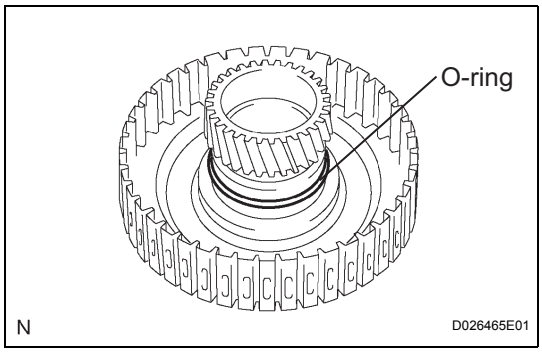

1. INSTALL UNDERDRIVE CLUTCH DRUM O-RING

(a) Coat a new O-ring with ATF, and install it to the underdrive clutch drum.
NOTICE:
Make sure that the O-ring is not twisted or pinched.

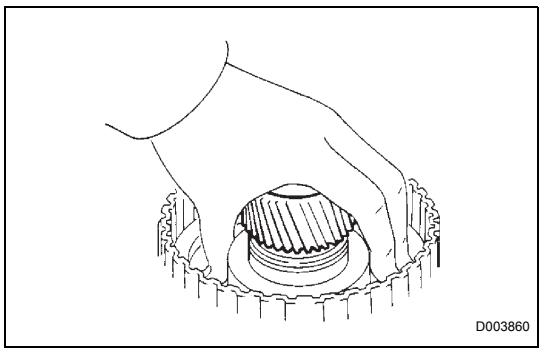

2. INSTALL UNDERDRIVE CLUTCH PISTON SET

(a) Coat the underdrive clutch piston with ATF, and install it to the underdrive clutch piston drum.
NOTICE:
- **Be careful not to damage the O-ring.**
- **Be careful not to damage the lip of the piston.**

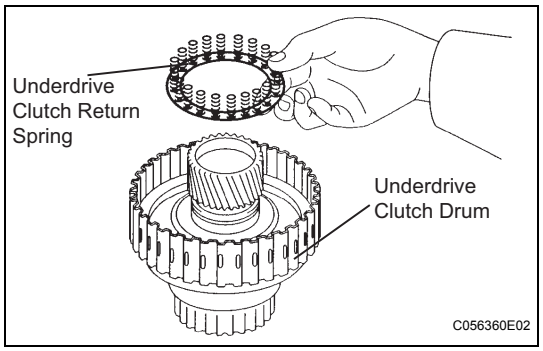

3. INSTALL UNDERDRIVE CLUTCH RETURN SPRING SUB-ASSEMBLY

(a) Install the return spring to the underdrive clutch drum.

NOTICE:

Installing the spring sub-assembly, check that all of the springs are fit in the piston correctly.

(b) Coat the clutch balancer with ATF.

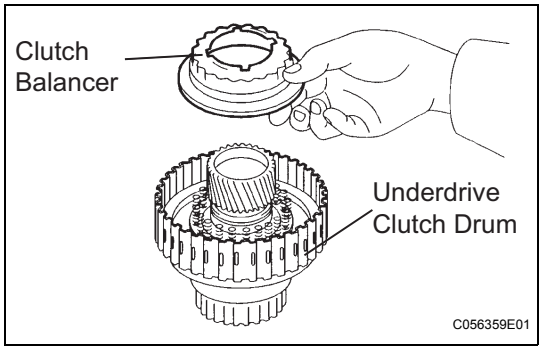

(c) Install the clutch balancer to the underdrive clutch drum.

NOTICE:

Be careful not to damage the lip of the clutch balancer.

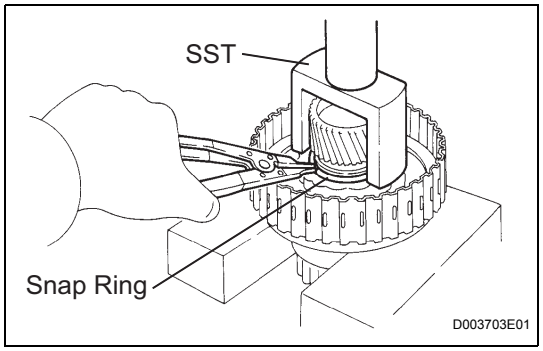

(d) Place SST on the clutch balancer and compress the piston return spring with a press.

SST 09350-32014 (09351-32070)

(e) Using a snap ring expander, install the snap ring to the underdrive clutch drum.

(f) Be sure that the end gap of the snap ring is not aligned with the spring retainer claw.

NOTICE:

- **Stop the press when the spring seat is lowered to the place 1 to 2 mm (0.039 to 0.078 in.) from the snap ring groove.**
- **This prevents the spring seat from being deformed.**
- **Do not expand the snap ring excessively.**

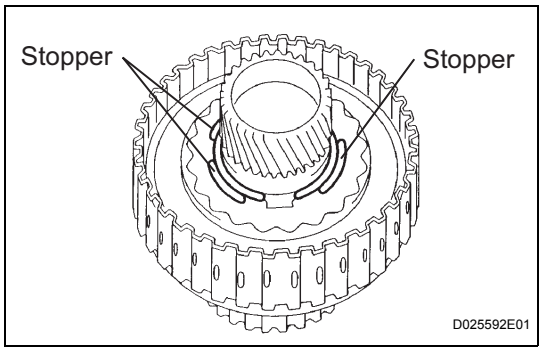

(g) Set the end gap of the snap ring in the underdrive clutch drum as shown in the illustration.

NOTICE:

The end gap of the snap ring should not align with any of the stoppers.

AX

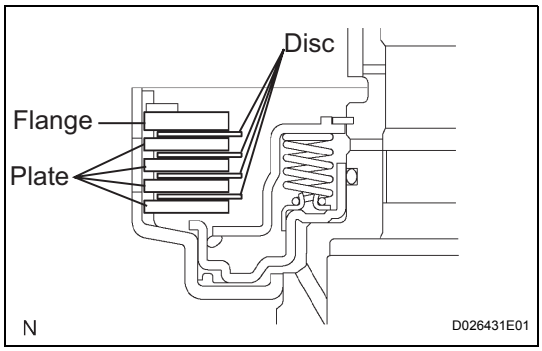

4. **INSTALL UNDERDRIVE CLUTCH DISC NO.1**
   (a) Coat the 4 discs with ATF.
   (b) Install the 4 plates, 4 discs and flange to the underdrive clutch drum.
   NOTICE:
   Make sure that the plates, discs, and flange are installed as shown in the illustration.

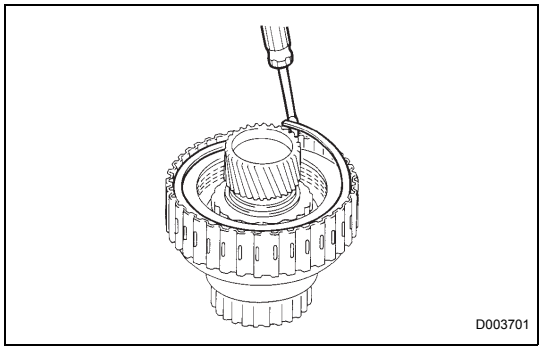

5. **INSTALL 1ST & REVERSE BRAKE RETURN SPRING SHAFT SNAP RING**
   (a) Using a screwdriver, install the underdrive clutch flange No.2 hole snap ring.
   (b) Check that the end gap of snap ring is not aligned with one of the cutouts.
   NOTICE:
   The snap ring should be fully engaged in the groove of the drum.

6. **INSPECT UNDERDRIVE PACK CLEARANCE**
   HINT:
   (See page AX-267)

DIFFERENTIAL CASE

COMPONENTS

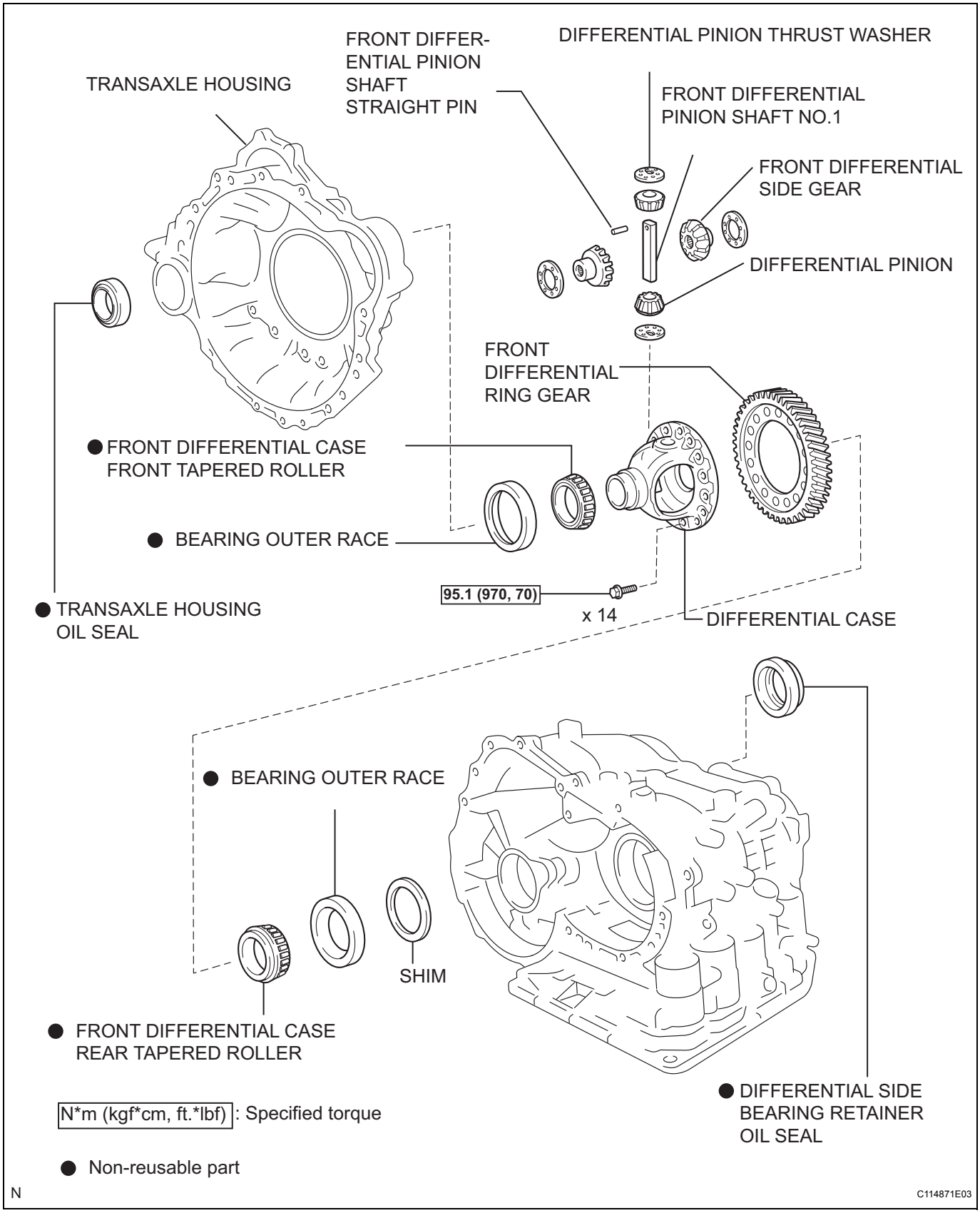

AX

DISASSEMBLY

1. REMOVE FRONT DIFFERENTIAL RING GEAR

(a) Place matchmarks on the front differential ring gear and differential case.

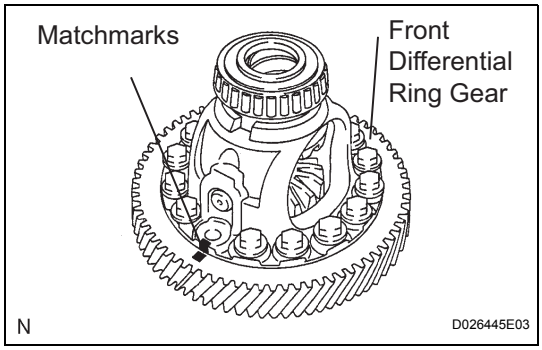

(b) Remove the 14 bolts.

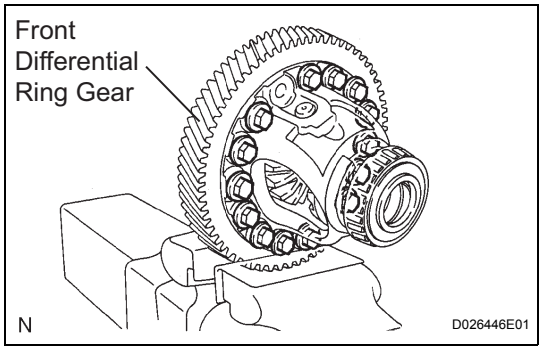

(c) Using a plastic hammer, tap on the front differential ring gear to remove it from the case.

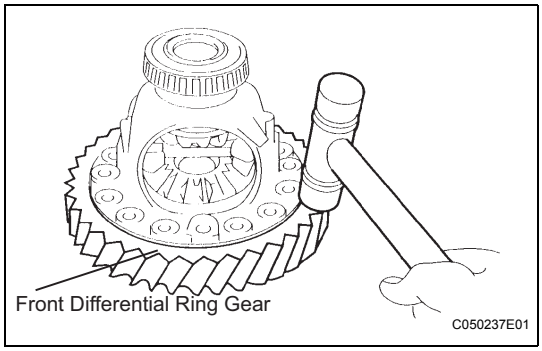

AX

2. REMOVE FRONT DIFFERENTIAL CASE FRONT TAPERED ROLLER BEARING

(a) Using SST, remove the front differential case front differential tapered roller bearing from the differential case.

SST 09950-00020, 09950-00030, 09950-60010 (09951-00490), 09950-40011 (09957-04010)

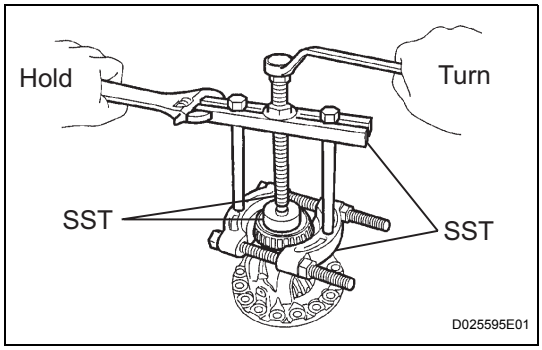

(b) Using SST, remove the front differential case front tapered roller bearing outer race.

SST 09308-00010

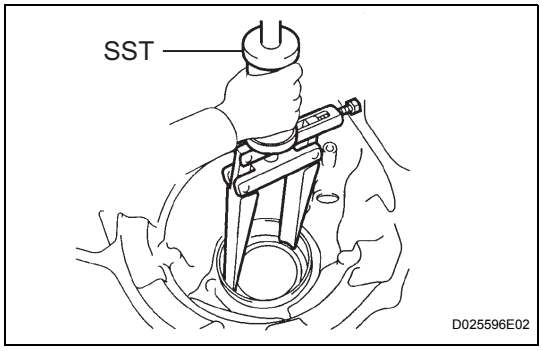

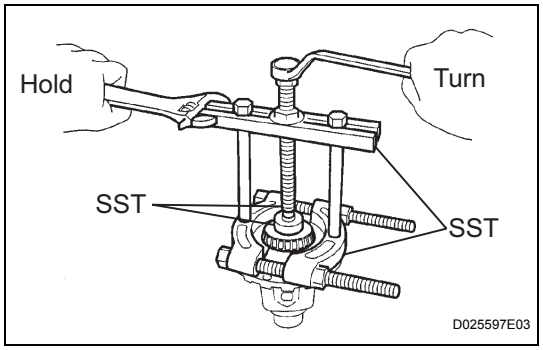

3. REMOVE FRONT DIFFERENTIAL CASE REAR TAPERED ROLLER BEARING

(a) Using SST, remove the front differential case rear tapered roller bearing from the differential case.
SST 09950-00020, 09950-00030, 09950-60010 (09951-00490), 09950-40011 (09957-04010), 09308-00010

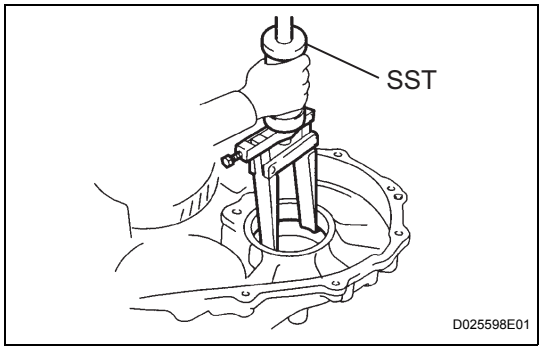

(b) Using SST, remove the front differential case rear tapered roller bearing outer race.
SST 09308-00010

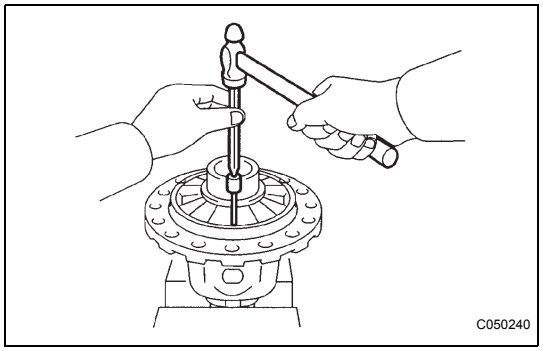

4. REMOVE FRONT DIFFERENTIAL PINION SHAFT STRAIGHT PIN

(a) Using a pin punch and hammer, install the straight pin.
NOTICE:
Before removing the straight pin, unstake it with a pin punch.

AX

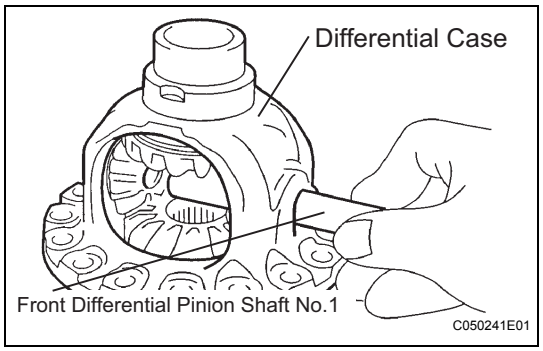

5. REMOVE FRONT DIFFERENTIAL PINION SHAFT NO.1

(a) Remove the front differential pinion shaft No.1 from the differential case.

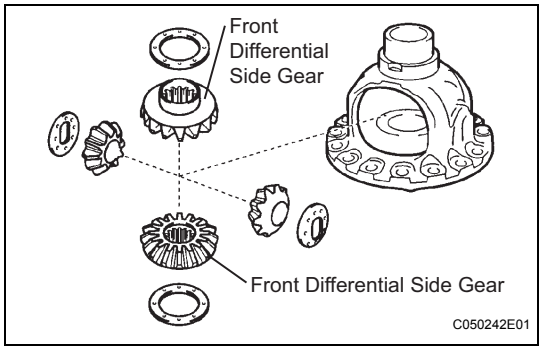

6. REMOVE FRONT DIFFERENTIAL SIDE GEAR

(a) Remove the 2 front differential pinions, 2 pinion thrust washers, 2 front differential side gears and 2 side gear thrust washers from the differential case.

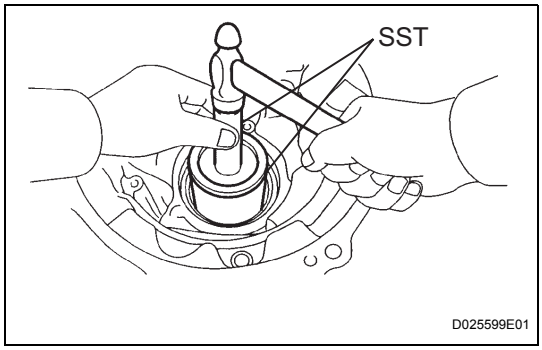

7. REMOVE TRANSAXLE HOUSING OIL SEAL

(a) Using SST and a hammer, remove the oil seal.

SST 09950-70010 (09951-07100), 09215-00013 (09215-00471)

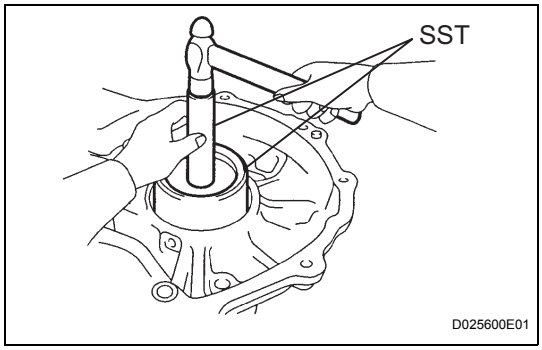

8. REMOVE DIFFERENTIAL SIDE BEARING RETAINER OIL SEAL

(a) Using SST, remove the oil seal.

SST 09950-70010 (09951-07100), 09608-10010

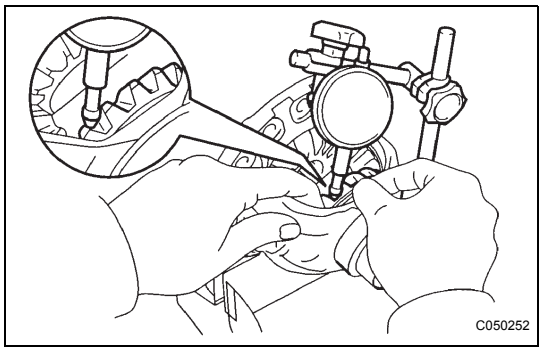

INSPECTION

1. INSPECT BACKLASH

(a) Using a dial indicator, inspect the backlash of the side gear.

Standard backlash:
0.05 to 0.20 mm (0.0020 to 0.0079 in.)

Thrust washer thickness

Mark	Thickness
-	1.625 mm (0.0640 in.)
-	1.725 mm (0.0679 in.)
-	1.825 mm (0.0719 in.)

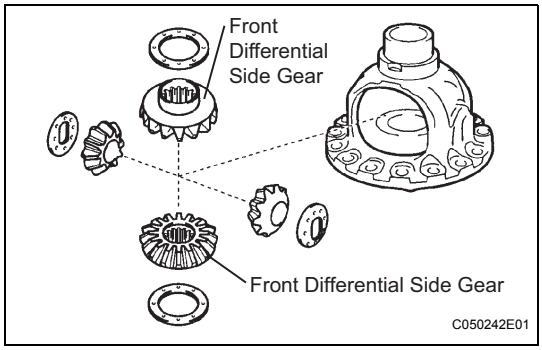

REASSEMBLY

1. INSTALL FRONT DIFFERENTIAL SIDE GEAR

(a) Apply ATF to the 2 front differential side gears, 2 side gear thrust washers, 2 front differential pinions and 2 pinion thrust washers and install them to the differential case.

AX

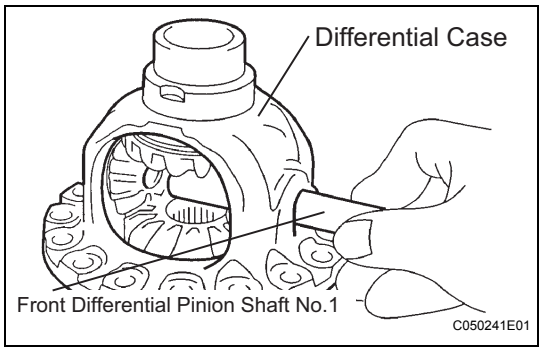

2. INSTALL FRONT DIFFERENTIAL PINION SHAFT NO.1

(a) Coat the front differential pinion shaft No.1 with ATF, and install it to the differential case.

3. INSPECT BACKLASH

HINT:

(See page AX-274)

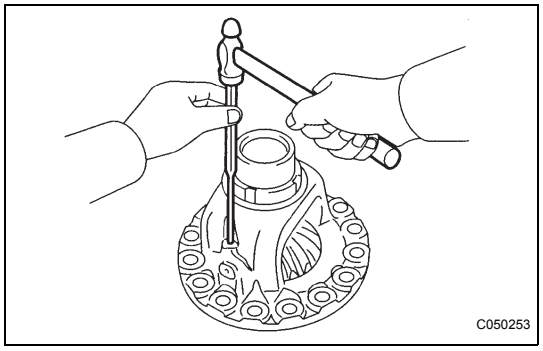

4. INSTALL FRONT DIFFERENTIAL PINION SHAFT STRAIGHT PIN

(a) Using a pin punch and a hammer, install the pinion shaft straight pin.

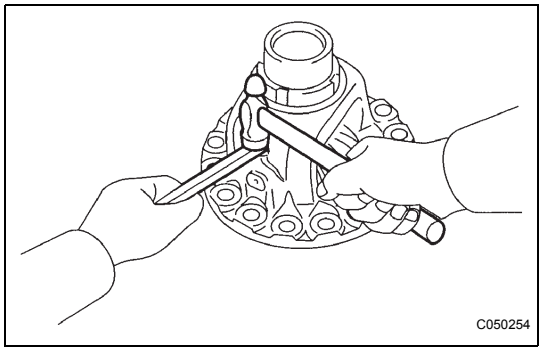

(b) Using a chisel and a hammer, stake the differential case.

NOTICE:

Stake the differential case after adjusting the backlash.

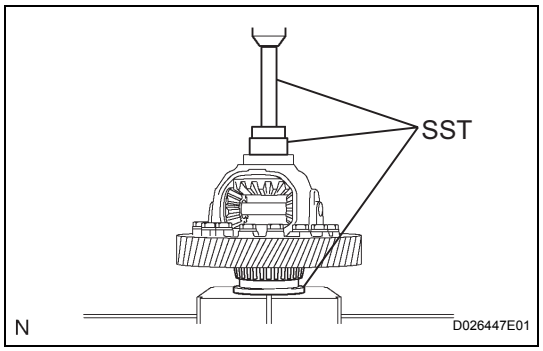

5. INSTALL FRONT DIFFERENTIAL CASE FRONT TAPERED ROLLER BEARING

(a) Using SST and a press, install the front differential case front tapered roller bearing to the differential case.

SST 09316-12010, 09550-60010 (09951-00490), 09950-70010 (09951-07100)

NOTICE:

Do not damage the bearing cage when installing the bearing inner race.

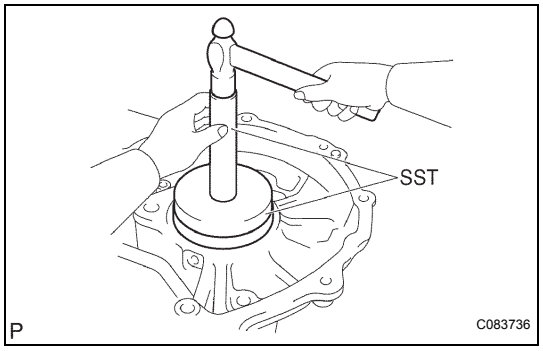

(b) Using SST and a hammer, install the front differential case tapered roller bearing front outer race to the transaxle housing.

SST 09550-60010 (09951-00490), 09950-60020 (09951-00910)

AX

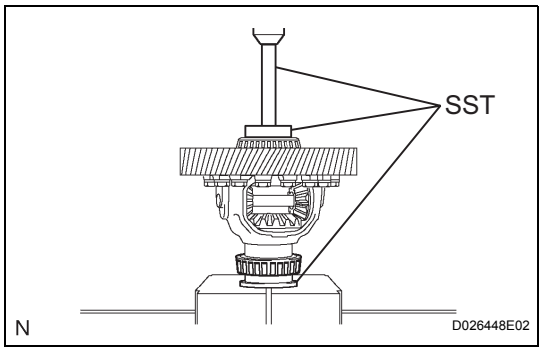

6. INSTALL FRONT DIFFERENTIAL CASE REAR TAPERED ROLLER BEARING

(a) Using SST and a press, install the front differential case front tapered roller bearing to the differential case.

SST 09316-12010, 09550-60010 (09951-00490), 09950-70010 (09951-07100, 09951-07150)

NOTICE:

Do not damage the bearing cage when installing the bearing inner race.

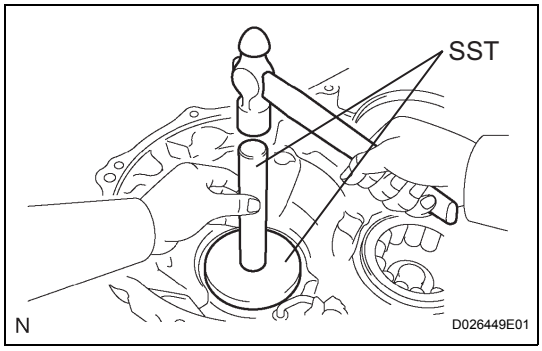

(b) Using SST and a hammer, install the front differential case tapered roller bearing rear outer race to the transaxle housing.

SST 09950-70010 (09951-07100, 09951-07150), 09950-60020 (09951-00890)

NOTICE:

No clearance is allowed between the bearing and transaxle housing.

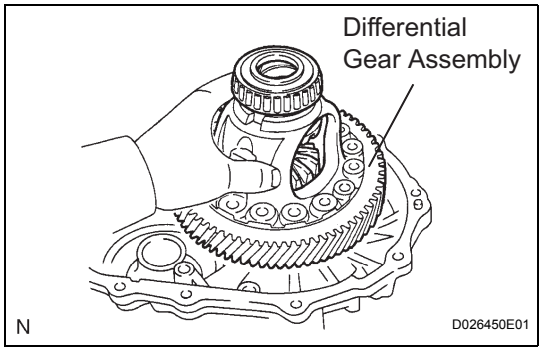

7. ADJUST DIFFERENTIAL SIDE BEARING PRELOAD

(a) Install the differential assembly to the transaxle case.

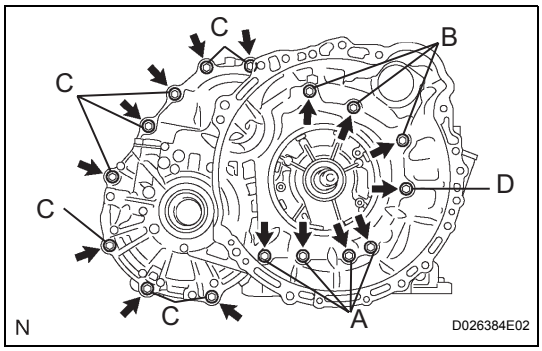

(b) Clean the mating surfaces of the transaxle case and transaxle housing.

(c) Install the transaxle housing to the transaxle case and tighten them with the 16 bolts.

Torque: Bolt A
25 N*m (255 kgf*cm, 18 ft.*lbf)
Bolt B
33 N*m (337 kgf*cm, 24 ft.*lbf)
Bolt C
29 N*m (295 kgf*cm, 21 ft.*lbf)
Bolt D
22 N*m (226 kgf*cm, 16.0 ft.*lbf)

HINT:

Apply seal packing or equivalent to bolts A and D.

Seal packing:
THREE BOND 2403 or equivalent

Bolt length:
Bolt A:
50 mm (1.969 in.)
Bolt B:
50 mm (1.969 in.)
Bolt C:

AX

42 mm (1.654 in.)
Bolt D:
72 mm (2.835 in.)

HINT:
Usually, bolt A is non-reusable. In this case, however, the bolt can be used after cleaning it.

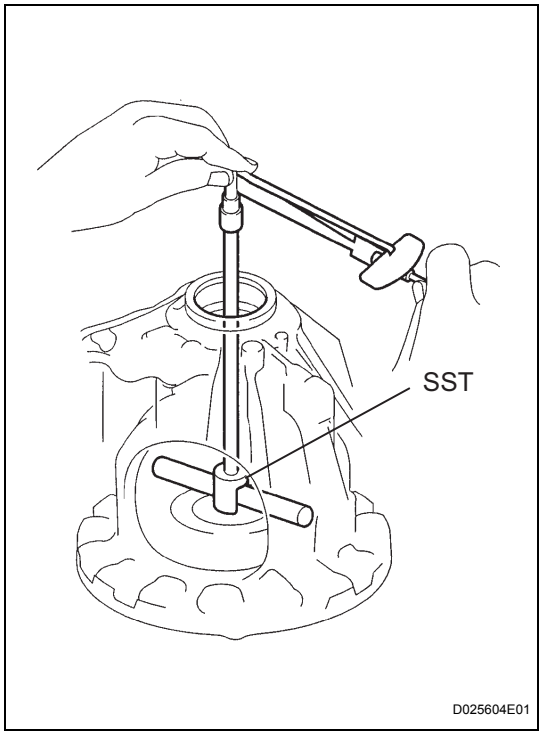

(d) Using SST, turn the differential assembly to the right and left 2 or 3 times to settle the bearing.
SST 09564-32011

(e) Using SST and a torque wrench, measure the turning torque of the differential.
SST 09564-32011
Turning torque at 60 rpm:
New bearing:
0.20 to 0.69 N*m (2.0 to 7.0 kgf*cm, 1.8 to 6.1 in.*lbf)
Used bearing:
0.10 to 0.35 N*m (1.0 to 3.6 kgf*cm, 0.9 to 3.1 in.*lbf)

HINT:
If the turning torque is not as specified, refer to the table below to select a thrust washer so that the specified value is achieved.

Flange thickness: mm (in.)

Mark	Thickness	Mark	Thickness
0	2.00 (0.0787)	9	2.45 (0.0965)
1	2.05 (0.0807)	A	2.50 (0.0984)
2	2.10 (0.0827)	B	2.55 (0.1004)
3	2.15 (0.0846)	C	2.60 (0.1024)
4	2.20 (0.0866)	D	2.65 (0.1043)
5	2.25 (0.0886)	E	2.70 (0.1063)
6	2.30 (0.0906)	F	2.75 (0.1083)
7	2.35 (0.0925)	G	2.80 (0.1102)
8	2.40 (0.0945)	H	2.85 (0.1122)

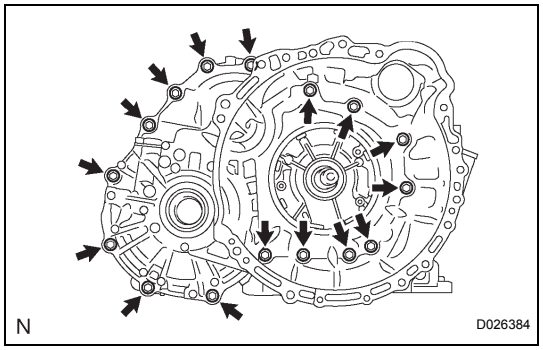

(f) Remove the 16 bolts and the transaxle housing.

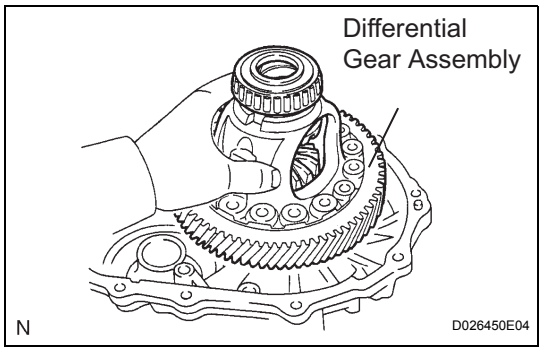

(g) Remove the differential assembly.

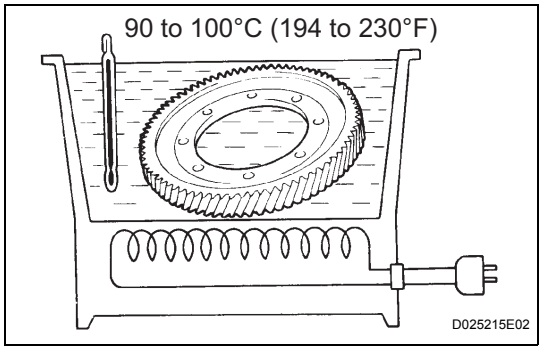

8. INSTALL FRONT DIFFERENTIAL RING GEAR

(a) Using ATF and heater, heat the front differential ring gear to 90 to 110°C (194.0 to 230.0°F).
NOTICE:
Do not heat the ring gear to more than 110°C (230.0°F).

(b) Clean the contact surface of the front differential case.

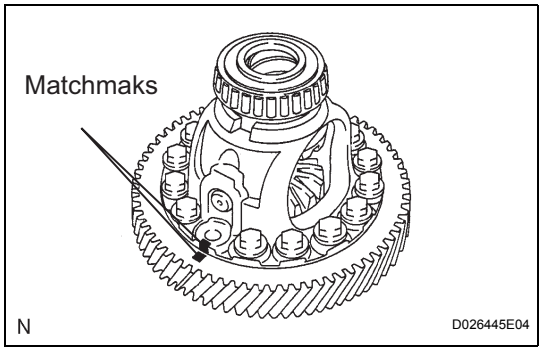

(c) Align the matchmarks, and install the front differential ring gear case quickly.
NOTICE:
Do not install the bolts while the ring gear is hot.

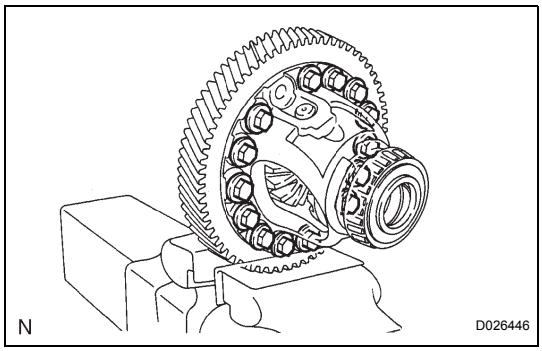

(d) Tighten the 14 bolts.
Torque: 95.0 N*m (970 kgf*cm, 70 ft.*lbf)
NOTICE:
Tighten the bolts a little at a time in a diagonal pattern.

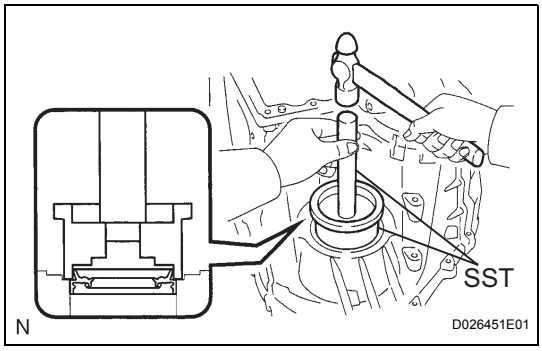

9. INSTALL TRANSAXLE HOUSING OIL SEAL

(a) Using SST and a hammer, install a new oil seal.
SST 09223-15020, 09950-70010 (09951-07150)

(b) Coat the lip of oil seal with a little MP grease.
Oil seal installation depth:
0 +- 0.5 mm (0 +- 0.0197 in.)

AX

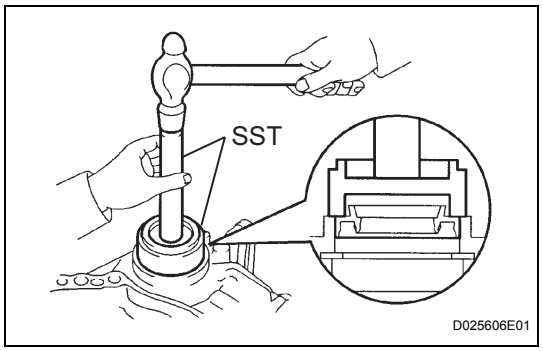

10. INSTALL DIFFERENTIAL SIDE BEARING RETAINER OIL SEAL

(a) Using SST and a hammer, install a new oil seal.
SST 09710-30050, 09950-70010 (09951-07150)

(b) Coat the lip of the oil seal with a little MP grease.
Oil seal installation depth:
0 +- 0.5 mm (0 +- 0.0197 in.)

AXLE SYSTEM

PROBLEM SYMPTOMS TABLE

Use the table below to help find the cause of the problem.
The causes of the problem are listed in order of probability in the "Suspected Area" column.
Check each part in order. If necessary, replace these parts.

FRONT DRIVE SHAFT

Symptom	Suspected area	See page
Wander	1. Wheel alignment (Front)	SP-4
	2. Wheel alignment (Rear)	SP-11
	3. Steering linkage (Loosen or worm)	PS-28
	4. Hub bearing(Worn)	AH-5
	5. Stabilizer bar	SP-56
Front wheel shimmy	1. Wheel balance	TW-2
	2. Shock absorber	SP-15
	3. Ball joint (Worn)	SP-25
	4. Hub bearing (Worn)	AH-5

FRONT AXLE HUB BOLT

COMPONENTS

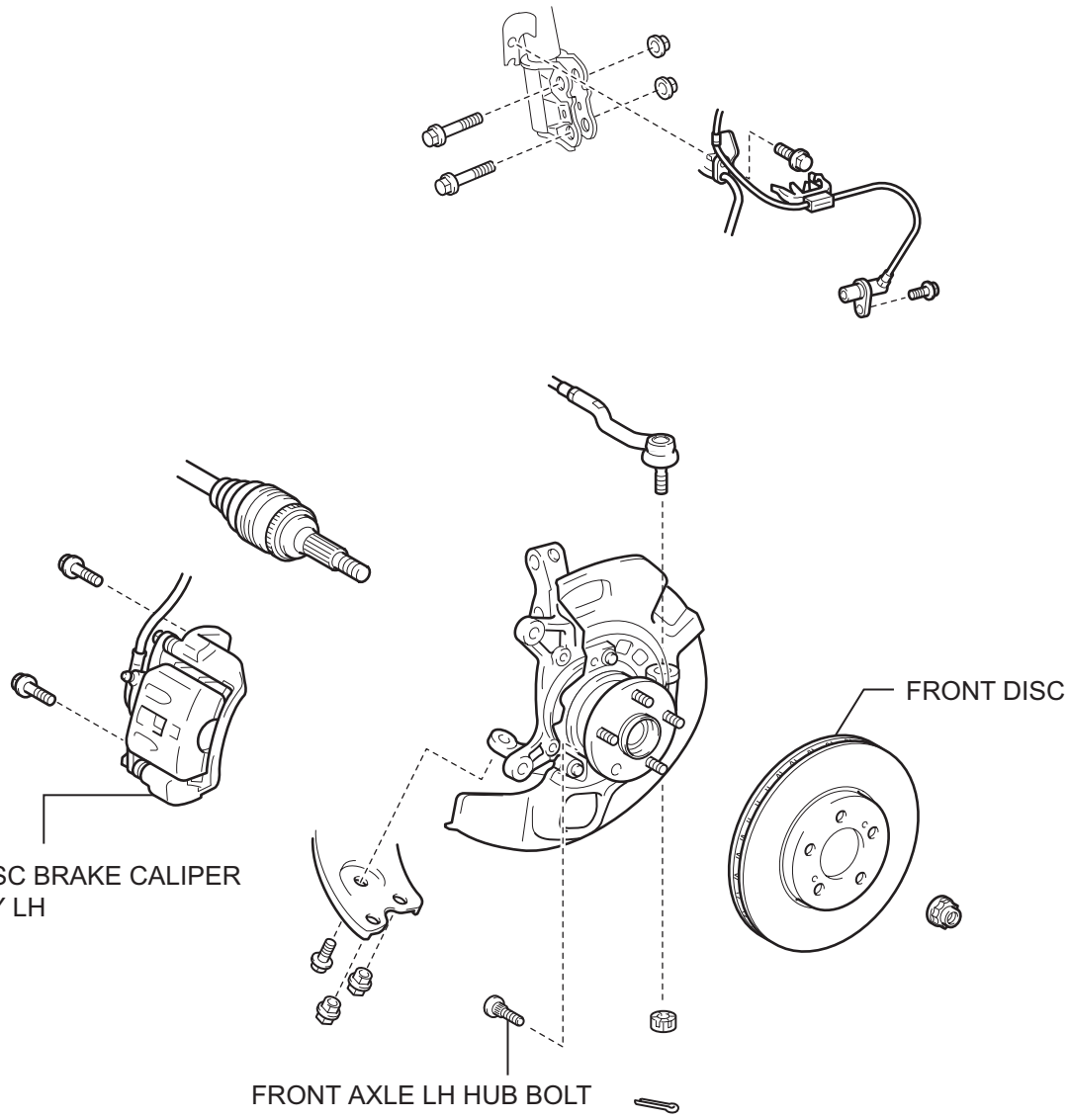

T

A122565E01

AH

REMOVAL

HINT:
- Use the same procedures for the RH side and LH side.
- The procedures listed below are for the LH side.

1. **REMOVE FRONT WHEEL**
2. **SEPARATE FRONT DISC BRAKE CALIPER ASSEMBLY LH (See page AH-6)**
3. **REMOVE FRONT DISC**
4. **REMOVE FRONT AXLE LH HUB BOLT**
   (a) Temporarily install the 2 nuts and 2 washers to the front axle LH hub bolts as shown in the illustration.
   (b) Using SST and a screwdriver or an equivalent to hold the front axle, remove the front axle LH hub bolt.
   SST 09628-10011

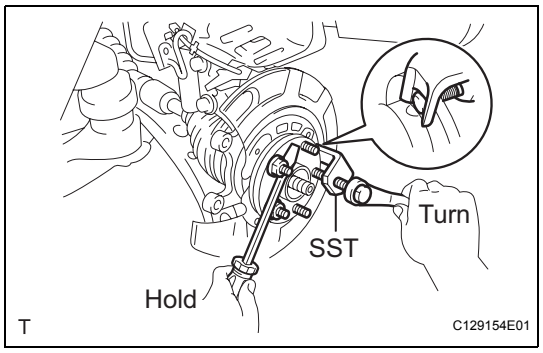

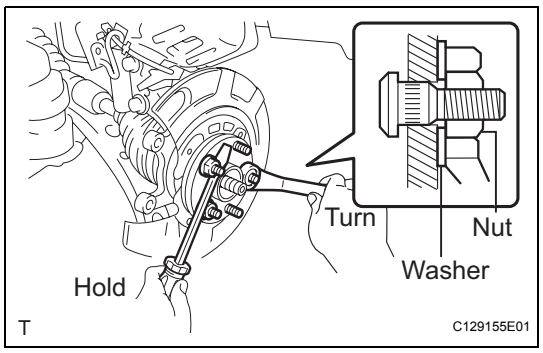

INSTALLATION

1. **INSTALL FRONT AXLE LH HUB BOLT**
   (a) Install a washer and nut to a new front axle LH hub bolt as shown in the illustration.
   (b) Using SST and a screwdriver or an equivalent hold the front axle, install a new hub bolt by tightening the nut.
2. **INSTALL FRONT DISC**
3. **INSTALL FRONT DISC BRAKE CALIPER ASSEMBLY LH (See page AH-11)**
4. **INSTALL FRONT WHEEL**
   Torque: 103 N*m (1.050 kgf*cm, 76 ft.*lbf)

FRONT AXLE HUB

COMPONENTS

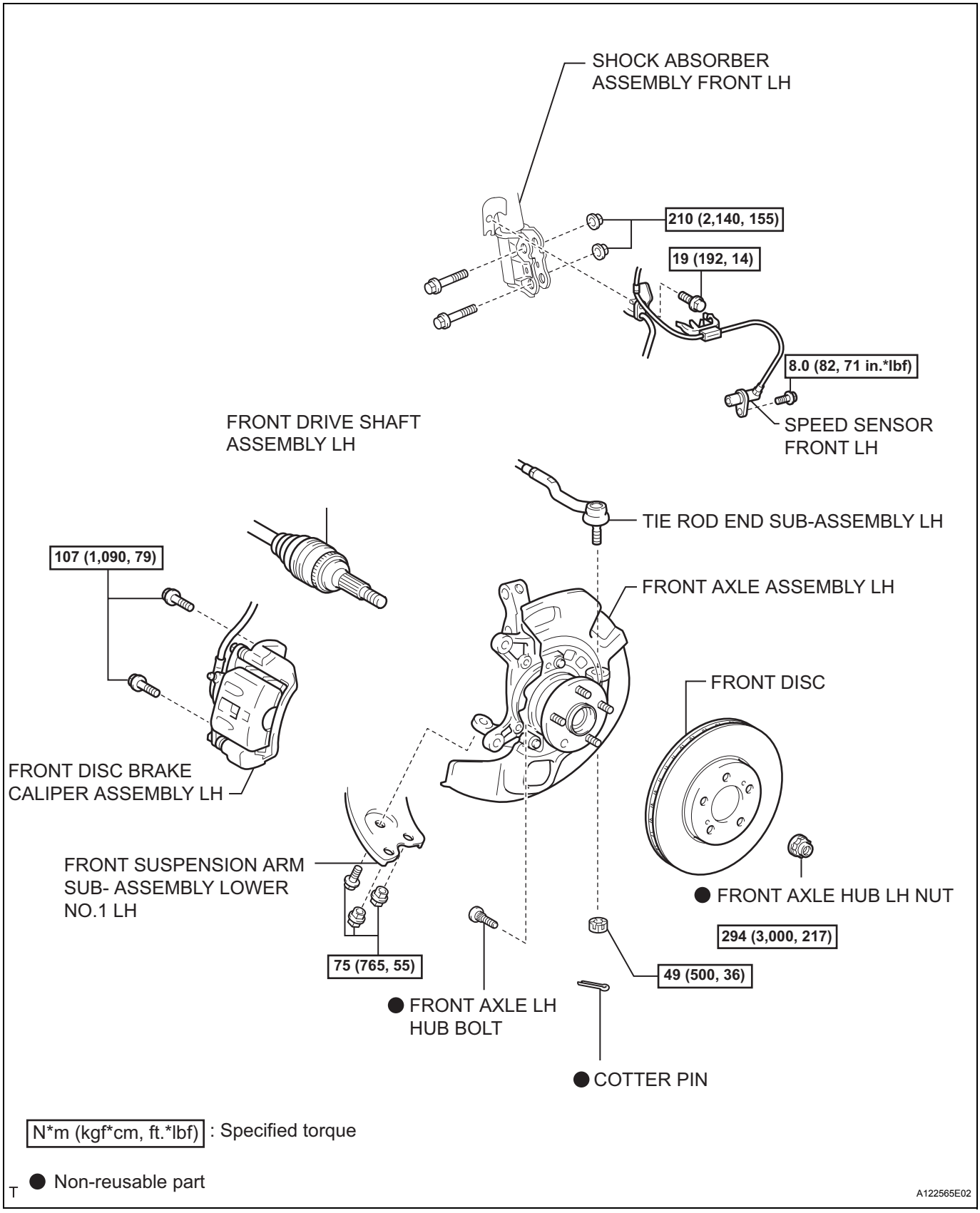

AH

T

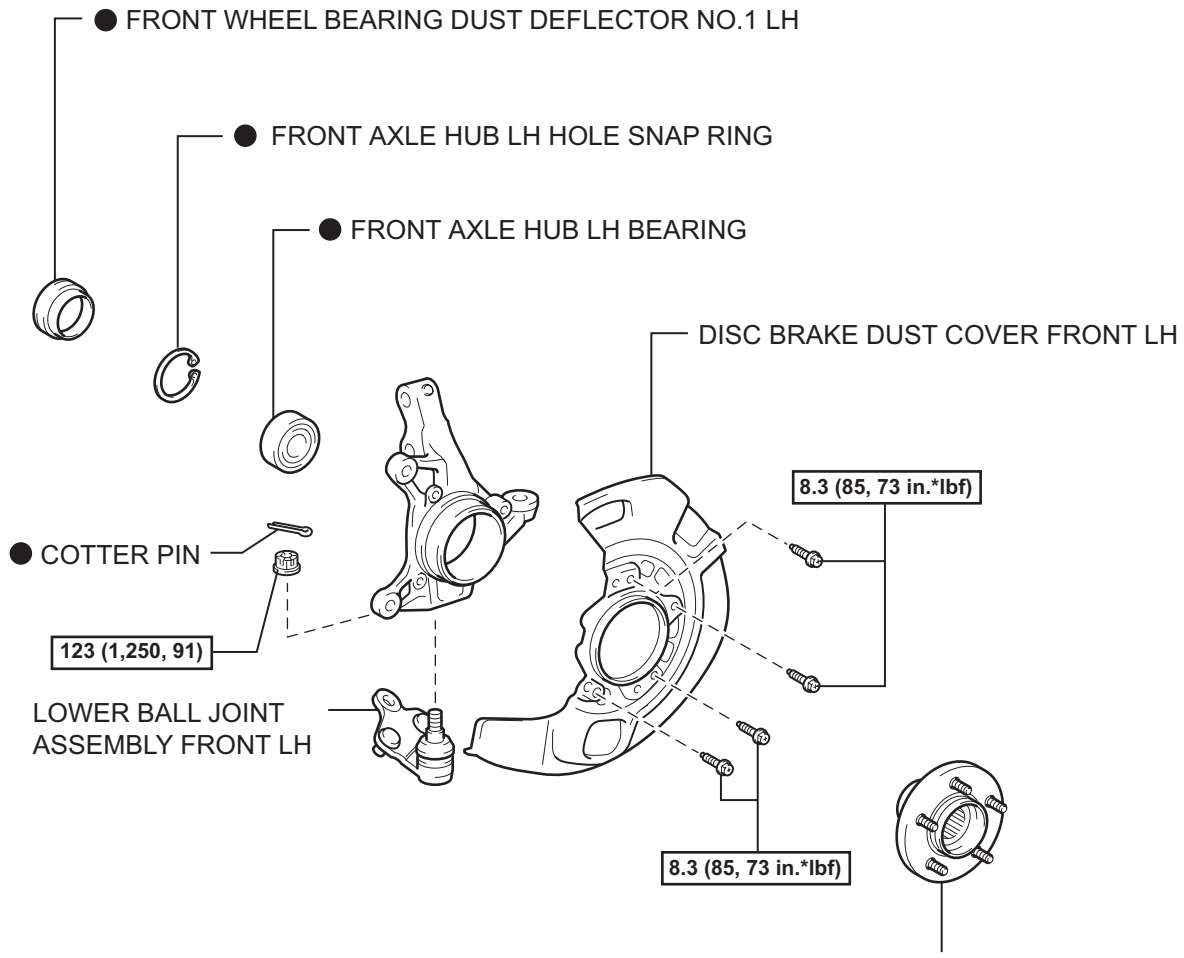

AH

N*m (kgf*cm, ft.*lbf) : Specified torque

● Non-reusable part

T

A122566E01

ON-VEHICLE INSPECTION

1. **REMOVE FRONT WHEEL**
2. **REMOVE FRONT DISC BRAKE CALIPER ASSEMBLY LH (See page AH-6)**
3. **REMOVE FRONT DISC**
4. **INSPECT FRONT AXLE HUB BEARING LOOSENESS**

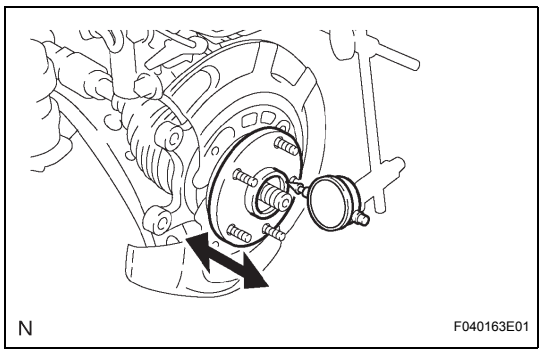

(a) Using a dial indicator, check for looseness near the center of the axle hub.
Maximum:
0.05 mm (0.0020 in.)
NOTICE:
Ensure that the dial indicator is set at right angles to the measurement surface.
If looseness exceeds the maximum, replace the bearing.

5. **INSPECT FRONT AXLE HUB RUNOUT**

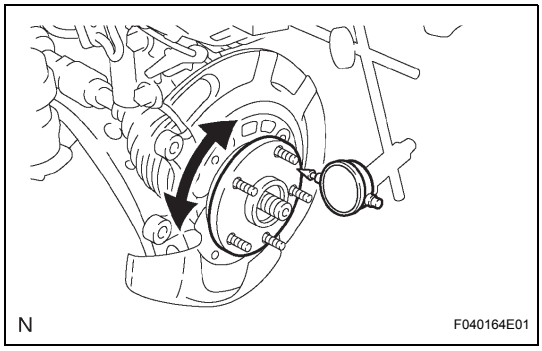

(a) Using a dial indicator, check for runout on the surface of the axle hub outside the hub bolt.
Maximum:
0.05 mm (0.0020 in.)
NOTICE:
Ensure that the dial indicator is set at right angles to the measurement surface.
If runout exceeds the maximum, replace the axle hub.

6. **INSTALL FRONT DISC**
7. **INSTALL FRONT DISC BRAKE CALIPER ASSEMBLY LH (See page AH-11)**
8. **INSTALL FRONT WHEEL**
Torque: 103 N*m (1.050 kgf*cm, 76 ft.*lbf)

REMOVAL

HINT:
- Use the same procedures for the RH side and LH side.
- The procedures listed below are for the LH side.

1. **REMOVE FRONT WHEEL**
2. **REMOVE FRONT AXLE HUB LH NUT (See page DS-5)**
3. **SEPARATE SPEED SENSOR FRONT LH (See page DS-5)**
4. **SEPARATE FRONT DISC BRAKE CALIPER ASSEMBLY LH**
   (a) Remove the 2 bolts and separate the front disc brake caliper assembly LH from the steering knuckle LH.
   NOTICE:
   Use a wire or an equivalent to keep the brake caliper from hanging down by the flexible hose.

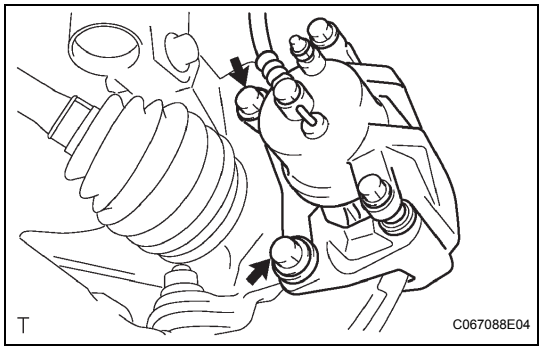

5. **REMOVE FRONT DISC**
6. **SEPARATE TIE ROD END SUB-ASSEMBLY LH (See page DS-6)**
7. **SEPARATE FRONT SUSPENSION ARM SUB-ASSEMBLY NO.1 LH (See page DS-6)**
8. **REMOVE FRONT AXLE ASSEMBLY LH**
   (a) Put matchmarks on the front drive shaft assembly LH and the front axle hub sub-assembly LH.
   (b) Using a plastic hammer, separate the front drive shaft assembly LH from the front axle hub sub-assembly LH.
   NOTICE:
   Be careful not to damage the drive shaft boot and speed sensor rotor.

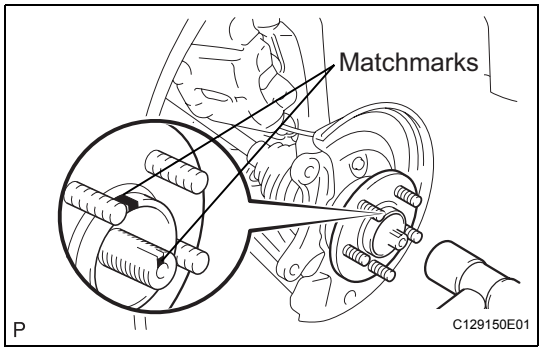

   (c) Remove the 2 bolts, nuts and steering knuckle LH with the front axle hub sub-assembly LH.

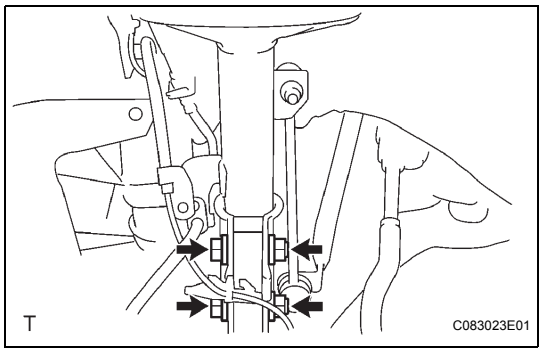

AH

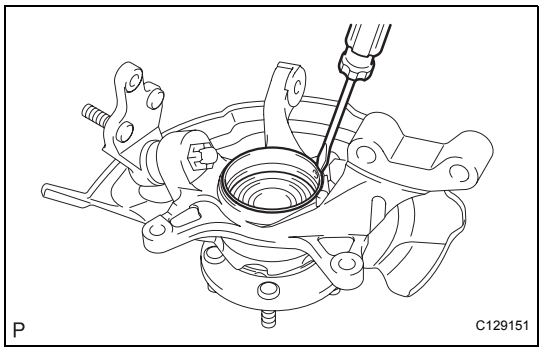

DISASSEMBLY

1. REMOVE FRONT WHEEL BEARING DUST DEFLECTOR NO.1 LH

(a) Using a screwdriver, remove the front wheel bearing dust deflector No.1 LH.

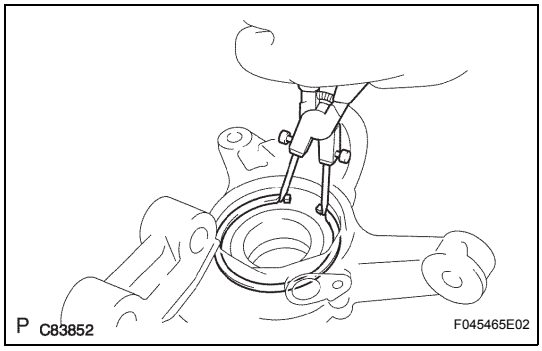

2. REMOVE FRONT AXLE HUB LH HOLE SNAP RING

(a) Using snap ring pliers, remove the front axle hub LH hole snap ring.

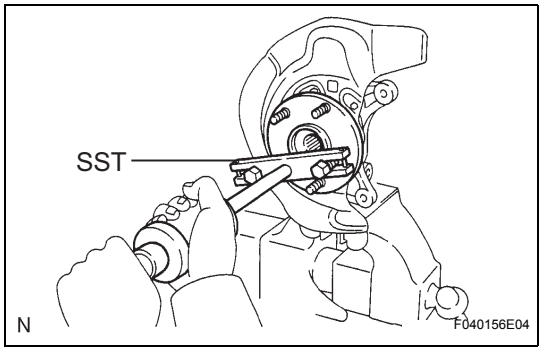

3. REMOVE FRONT AXLE HUB SUB-ASSEMBLY LH

(a) Using SST, remove the front axle hub sub-assembly LH.

SST 09520-00031

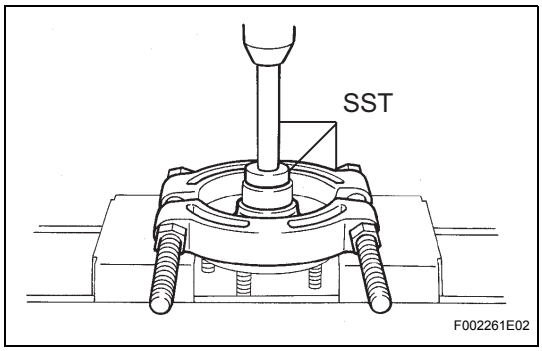

(b) Using SST and a press, remove the bearing inner race (outside) from the front axle hub sub-assembly LH.

SST 09950-00020, 09950-60010 (09951-00430), 09950-70010 (09951-07100)

4. REMOVE DISC BRAKE DUST COVER FRONT LH

(a) Using a torx wrench (T30), remove the 4 bolts and disc brake dust cover front LH.

5. REMOVE LOWER BALL JOINT ASSEMBLY FRONT LH (See page SP-24)

6. REMOVE FRONT AXLE HUB LH BEARING

(a) Place the bearing inner race (outside) on the front axle hub LH bearing.

AH

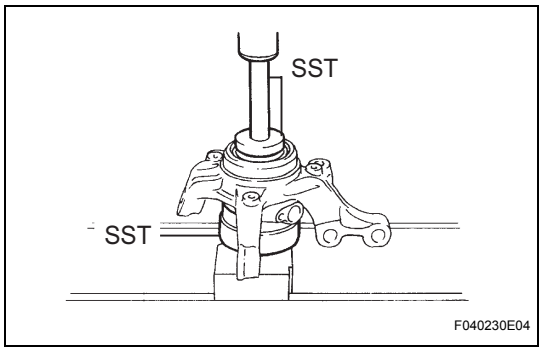

(b) Using SST and a press, press the front axle hub LH bearing until it comes into contact with the SST.
SST 09527-17011, 09950-60010 (09951-00600), 09950-70010 (09951-07100)

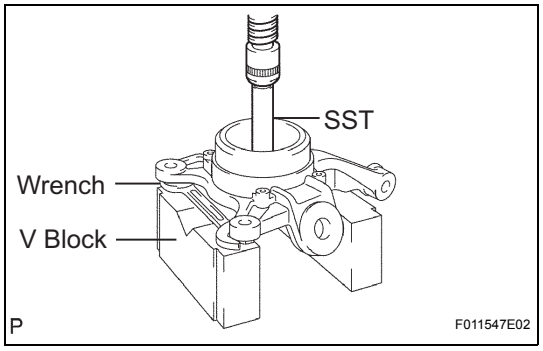

(c) Using a wrench to make the steering knuckle LH horizontal, fix it to the V block, as shown in the illustration.
NOTICE:
Be sure steering knuckle is horizontally positioned.

(d) Using SST and a press, remove the front axle hub LH bearing.
SST 09950-60010 (09951-00600), 09950-70010 (09951-07100)

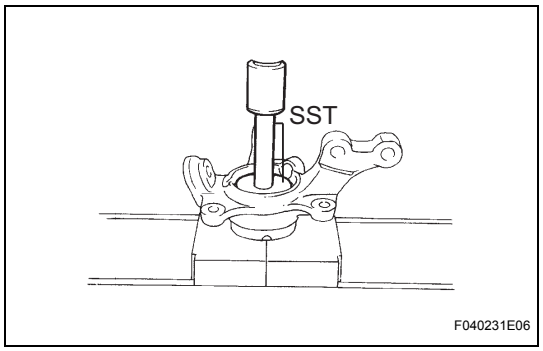

REASSEMBLY

1. INSTALL FRONT AXLE HUB LH BEARING

(a) Using SST and a press, install a new front axle hub LH bearing to the steering knuckle LH.
SST 09950-60020 (09951-00810), 09950-70010 (09951-07100)

2. INSTALL LOWER BALL JOINT ASSEMBLY FRONT LH (See page SP-25)

3. INSTALL DISC BRAKE DUST COVER FRONT LH

(a) Place the disc brake dust cover front LH and use a torx wrench (T30) to torque the 4 bolts.
Torque: 8.3 N*m (85 kgf*cm, 73 in.*lbf)

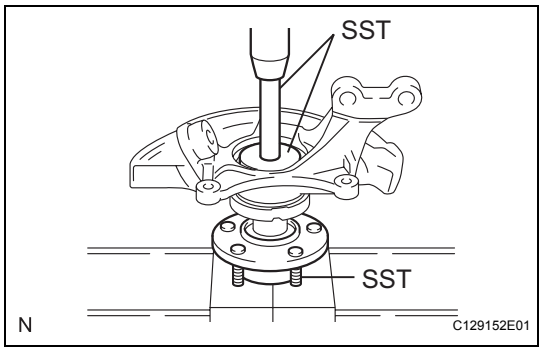

4. INSTALL FRONT AXLE HUB SUB-ASSEMBLY LH

(a) Using SST and a press, install the front axle hub sub-assembly LH.
SST 09608-32010, 09950-60020 (09951-00810), 09950-70010 (09951-07100)

AH

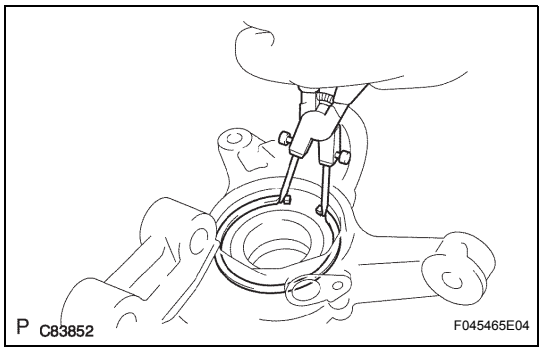

5. INSTALL FRONT AXLE HUB LH HOLE SNAP RING

(a) Using snap ring pliers, install a new front axle hub LH hole snap ring.

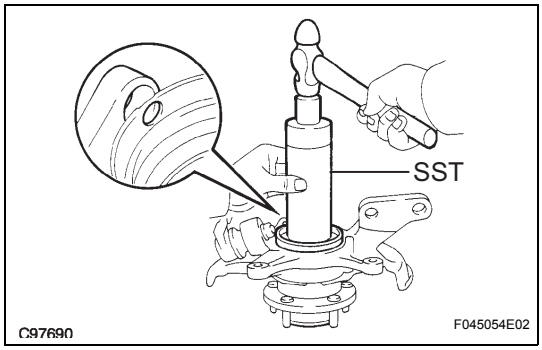

6. INSTALL FRONT WHEEL BEARING DUST DEFLECTOR NO.1 LH

(a) Using SST and a hammer, install a new bearing dust deflector No.1 LH.

SST 09316-60011 (09316-00011, 09316-00031), 09608-32010

HINT:

Align the hole for the speed sensor in the bearing dust deflector No.1 LH with the steering knuckle.

INSTALLATION

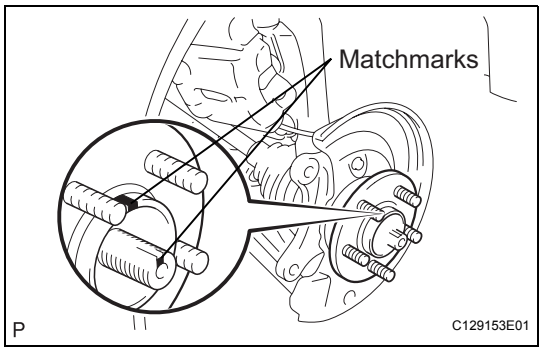

1. INSTALL FRONT AXLE ASSEMBLY LH

(a) Align the matchmarks and install the front drive shaft assembly LH to the front axle hub sub-assembly LH.

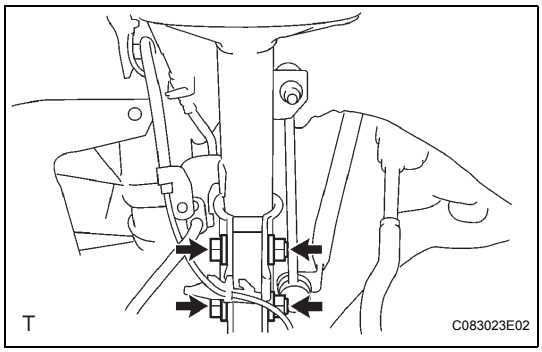

(b) Install the steering knuckle LH with the front axle hub sub-assembly LH to the shock absorber assembly front LH with the 2bolts and 2 nuts.

Torque: 210 N*m (2.140 kgf*cm, 155 ft.*lbf)

NOTICE:

- **Only when reusing the bolts and nuts, apply a small amount of engine oil to the threads of the nuts.**
- **Be careful not to damage the drive shaft boot and speed sensor rotor.**

2. INSTALL FRONT SUSPENSION ARM SUB-ASSEMBLY LOWER NO.1 LH (See page DS-14)

3. INSTALL TIE ROD END SUB-ASSEMBLY LH (See page DS-14)

4. INSTALL FRONT DISC

AH

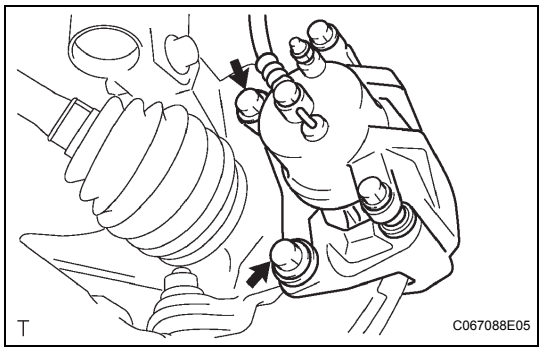

5. **INSTALL FRONT DISC BRAKE CALIPER ASSEMBLY LH**
   (a) Install the front disc brake caliper assembly LH to the steering knuckle LH with the 2 bolts.
   Torque: 107 N*m (1.090 kgf*cm, 79 ft.*lbf)
   NOTICE:
   Do not twist the brake hose when installing the front disc brake caliper assembly LH.

6. **INSTALL FRONT AXLE HUB LH NUT**
   (a) Using a socket wrench (30 mm), install a new axle hub LH nut.
   Torque: 294 N*m (3.000 kgf*cm, 217 ft.*lbf)
   HINT:
   Stake the nut after inspecting for looseness and runout through the following steps.

7. **SEPARATE FRONT DISC BRAKE CALIPER ASSEMBLY LH**
   (a) Remove the 2 bolts and separate the front disc brake caliper assembly LH from the steering knuckle LH.
   NOTICE:
   Use a wire or an equivalent to keep the brake caliper from hanging down by the flexible hose.

8. **REMOVE FRONT DISC**

9. **INSPECT FRONT AXLE HUB BEARING LOOSENESS (See page AH-6)**

10. **INSPECT FRONT AXLE HUB RUNOUT (See page AH-6)**

11. **INSTALL FRONT DISC**

12. **INSTALL FRONT DISC BRAKE CALIPER ASSEMBLY LH**
   (a) Install the front disc brake caliper assembly LH with the 2 bolts to the steering knuckle LH.
   Torque: 107 N*m (1.090 kgf*cm, 79 ft.*lbf)
   NOTICE:
   Do not twist the brake hose when installing the front disc brake caliper assembly LH.

13. **INSTALL SPEED SENSOR FRONT LH (See page DS-14)**

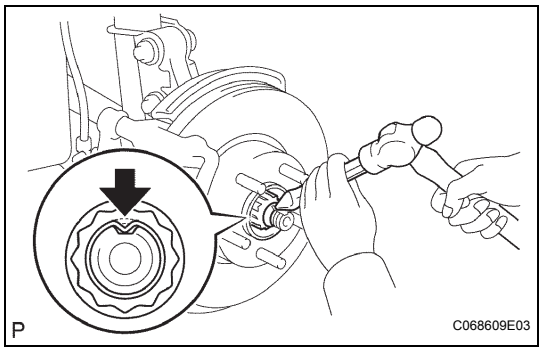

14. **INSTALL FRONT AXLE HUB LH NUT**
   (a) Using a chisel and hammer, stake the axle hub LH nut.

15. **INSTALL FRONT WHEEL**
   Torque: 103 N*m (1.050 kgf*cm, 76 ft.*lbf)

16. **INSPECT AND ADJUST FRONT WHEEL ALIGNMENT**
   (a) Inspect and adjust front wheel alignment (See page SP-4).

17. CHECK ABS SPEED SENSOR SIGNAL

(a) ABS WITH EBD & TRAC & VSC SYSTEM (See page BC-107)

(b) ABS WITH EBD SYSTEM (See page BC-11)

REAR AXLE HUB BOLT

COMPONENTS

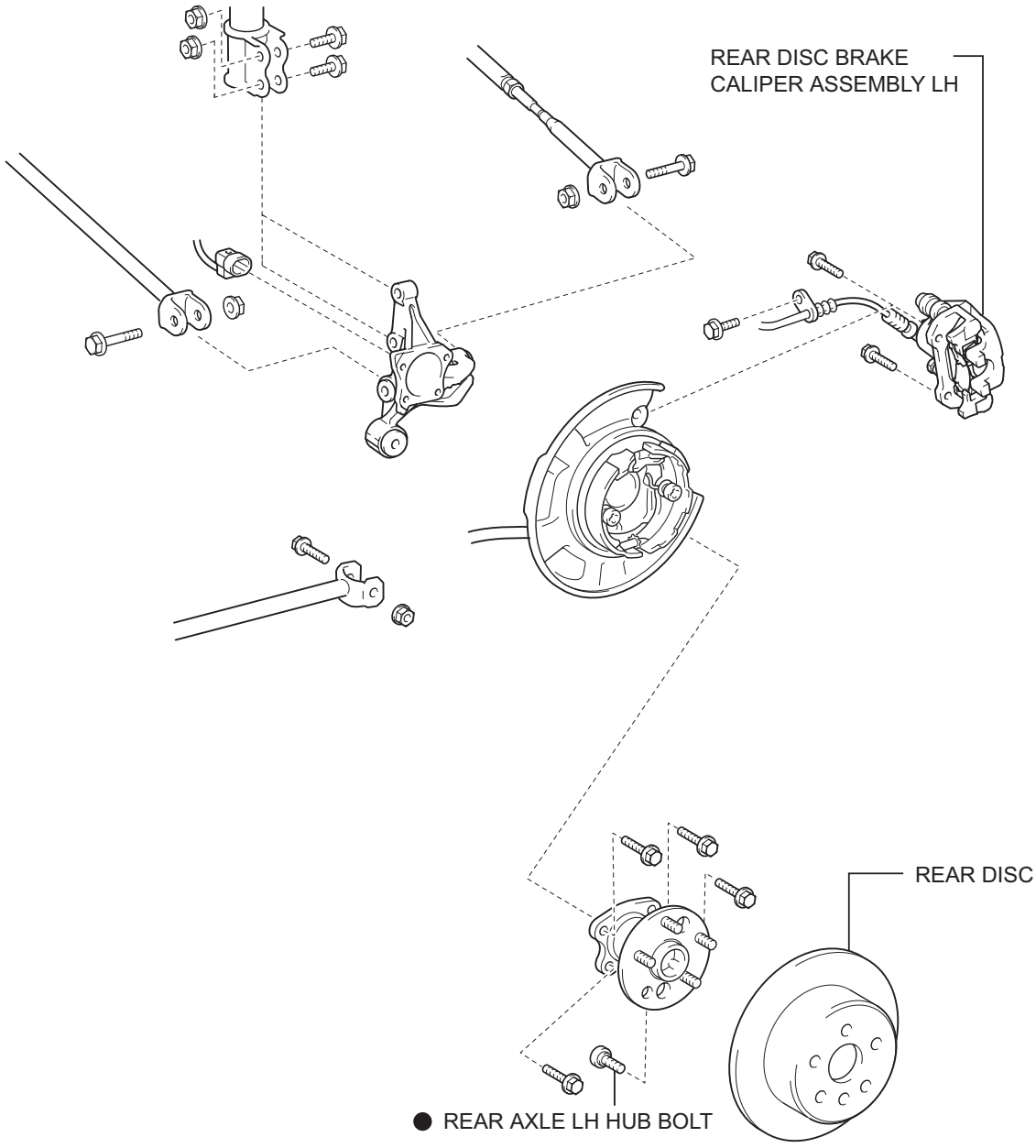

● Non-reusable part

P

C109661E07

AH

REMOVAL

HINT:
- Use the same procedures for the RH side and LH side.
- The procedures listed below are for the LH side.

1. **REMOVE REAR WHEEL**
2. **SEPARATE REAR DISC BRAKE CALIPER ASSEMBLY LH (See page AH-15)**
3. **REMOVE REAR DISC**
4. **REMOVE REAR AXLE LH HUB BOLT**
   (a) Temporarily install the 2 nuts and 2 washers to the rear axle LH hub bolts as shown in the illustration.
   (b) Using SST and a screwdriver or an equivalent to hold the hub & bearing assembly, remove the rear axle LH hub bolt.
   SST 09628-10011

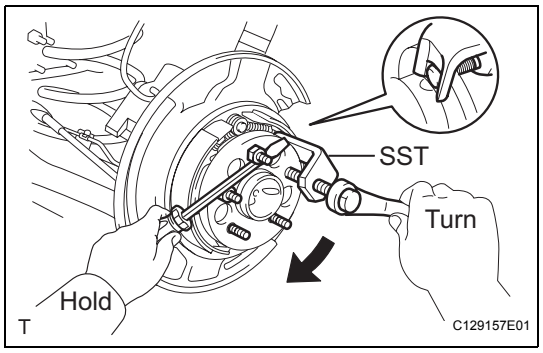

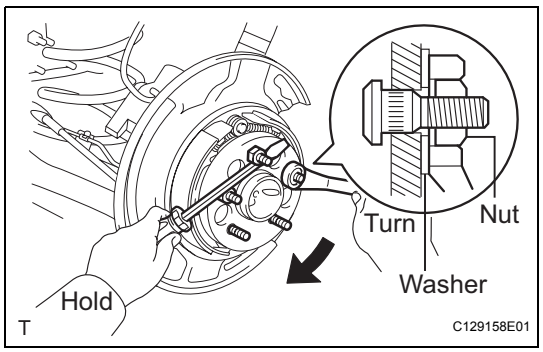

INSTALLATION

1. **INSTALL REAR AXLE LH HUB BOLT**
   (a) Install a washer and nut to a new bolt, as shown in the illustration.
   (b) Using a screwdriver or an equivalent to hold the hub & bearing assembly, install a new rear axle LH hub bolt by tightening the nut.
2. **INSTALL REAR DISC**
3. **INSTALL REAR DISC BRAKE CALIPER ASSEMBLY LH (See page AH-16)**
4. **INSTALL REAR WHEEL**

REAR AXLE HUB AND BEARING

COMPONENTS

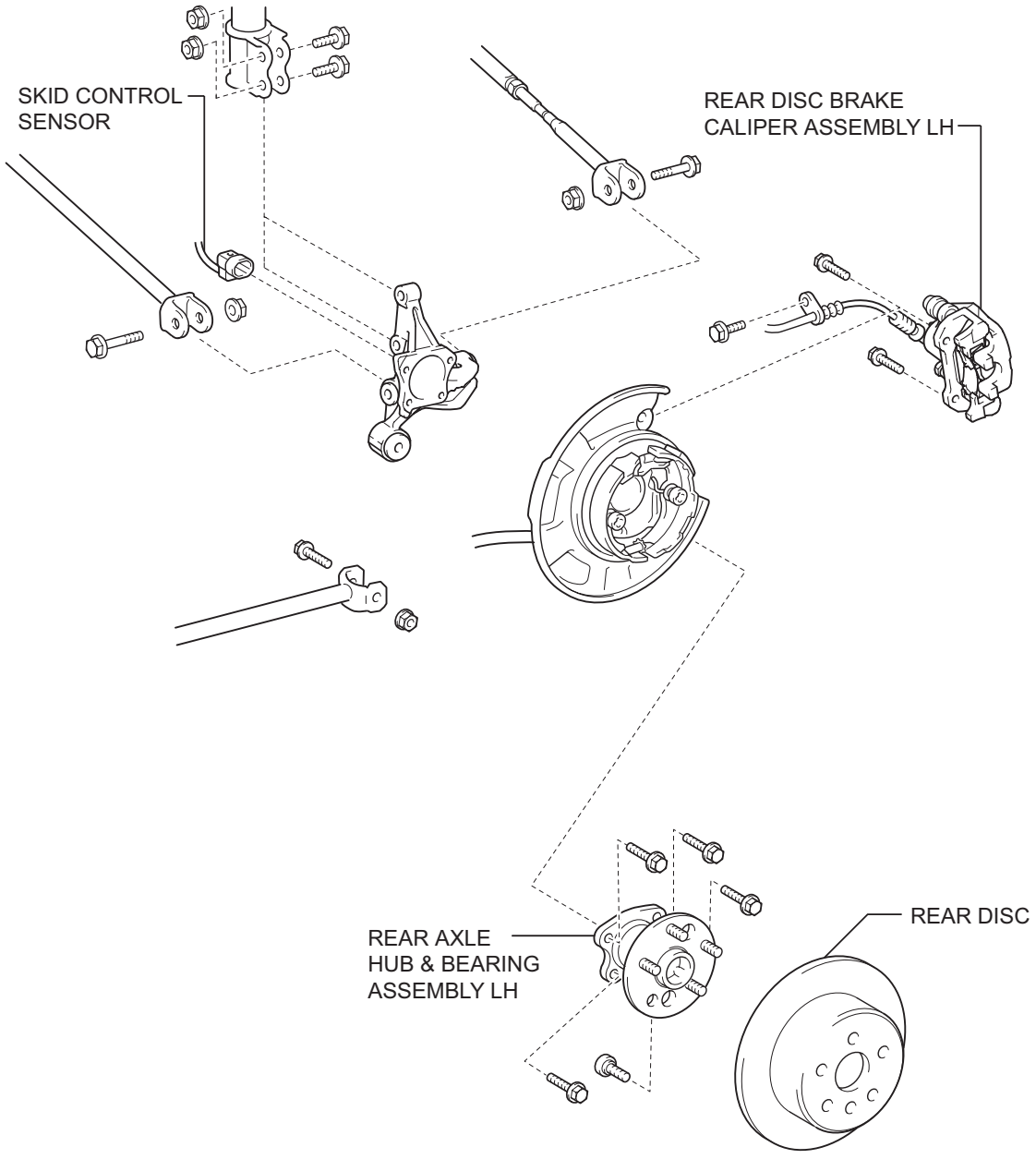

P

C109661E06

ON-VEHICLE INSPECTION

1. **REMOVE REAR WHEEL**
2. **SEPARATE REAR DISC BRAKE CALIPER ASSEMBLY LH (See page AH-15)**
3. **REMOVE REAR DISC**
4. **INSPECT REAR AXLE HUB BEARING LOOSENESS**
   (a) Using a dial indicator, check for looseness near the center of the axle hub.
   Maximum:
   0.05 mm (0.0020 in.)
   NOTICE:
   Ensure that the dial indicator is set at right angles to the measurement surface.
   If looseness exceeds the maximum, replace the axle hub assembly.

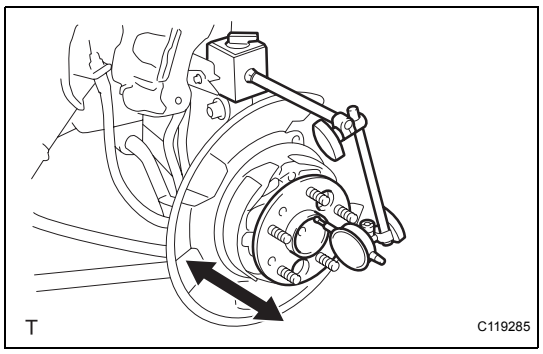

5. **INSPECT REAR AXLE HUB RUNOUT**
   (a) Using a dial indicator, check for runout on the surface of the axle hub outside the hub bolt.
   Maximum:
   0.07 mm (0.0027 in.)
   NOTICE:
   Ensure that the dial indicator is set at right angles to the measurement surface.
   If runout exceeds the maximum, replace the axle hub assembly.

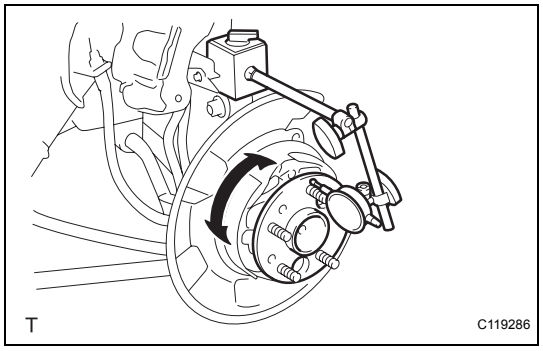

6. **INSTALL REAR DISC**
7. **INSTALL REAR DISC BRAKE CALIPER ASSEMBLY LH (See page AH-16)**
8. **INSTALL REAR WHEEL**
   Torque: 103 N*m (1,050 kgf*cm, 76 ft.*lbf)

REMOVAL

HINT:
- Use the same procedures for the RH side and LH side.
- The procedures listed below are for the LH side.

1. REMOVE REAR WHEEL

2. SEPARATE REAR DISC BRAKE CALIPER ASSEMBLY LH

(a) Remove the bolt and separate the flexible hose from the shock absorber.

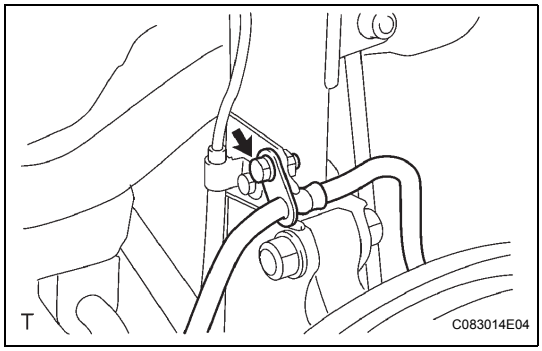

(b) Remove the 2 bolts and separate the rear disc brake caliper assembly LH.
NOTICE:
Use a wire or an equivalent to keep the brake caliper from hanging down by the flexible hose.

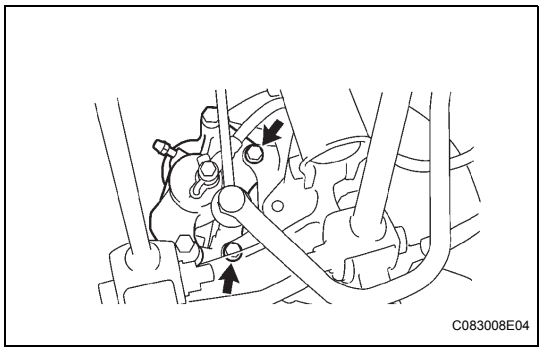

3. REMOVE REAR DISC

4. DISCONNECT SKID CONTROL SENSOR

(a) Disconnect the skid control sensor connector.

5. REMOVE REAR AXLE HUB & BEARING ASSEMBLY LH

(a) Remove the 4 bolts and hub & bearing assembly LH.

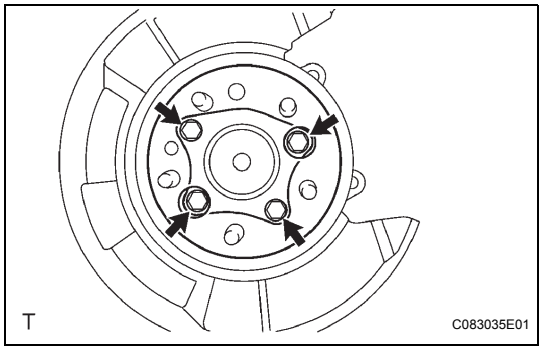

INSTALLATION

1. INSTALL REAR AXLE HUB & BEARING ASSEMBLY LH

(a) Install the hub & bearing assembly LH with the 4 bolts.
Torque: 80 N*m (816 kgf*cm, 59 ft.*lbf)

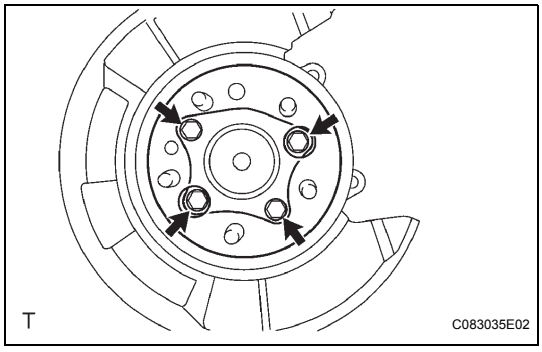

2. CONNECT SKID CONTROL SENSOR

(a) Connect the skid control sensor connector.
NOTICE:
Do not twist the sensor wire when connecting it.

3. INSPECT REAR AXLE HUB BEARING LOOSENESS (See page AH-15)

4. INSPECT REAR AXLE HUB RUNOUT (See page AH-15)

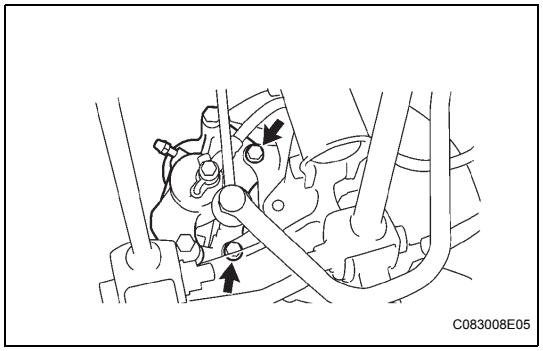

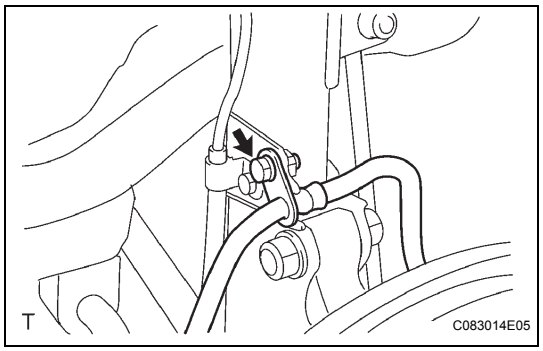

5. **INSTALL REAR DISC**

6. **INSTALL REAR DISC BRAKE CALIPER ASSEMBLY LH**
   (a) Install the rear disc brake caliper assembly LH with the 2 bolts.
   Torque: 62 N*m (632 kgf*cm, 46 ft.*lbf)
   NOTICE:
   Do not twist the brake hose when installing the rear disc brake caliper assembly LH.

   (b) Install the rear flexible hose with the bolt.
   Torque: 19 N*m (192 kgf*cm, 14 ft.*lbf)

7. **INSTALL REAR WHEEL**
   Torque: 103 N*m (1.050 kgf*cm, 76 ft.*lbf)

8. **ABS SPEED SENSOR SIGNAL**
   (a) ABS WITH EBD & TRAC & VSC SYSTEM (See page BC-107)
   (b) ABS WITH EBD SYSTEM (See page BC-11)

REAR AXLE CARRIER

COMPONENTS

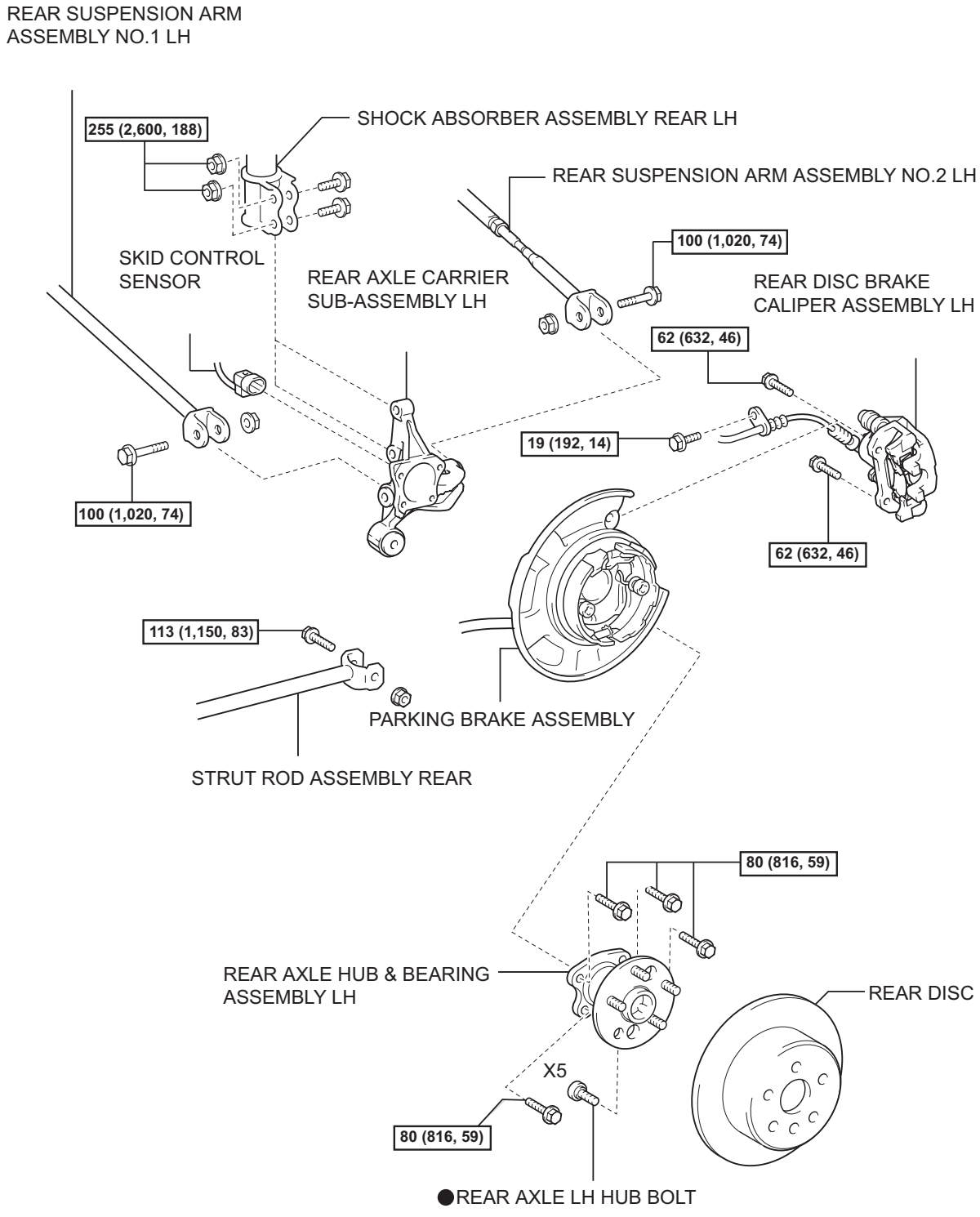

N*m (kgf*cm, ft.*lbf) : Specified torque

● Non-reusable part

P

C109661E05

AH

REMOVAL

HINT:
- Use the same procedures for the RH side and LH side.
- The procedures listed below are for the LH side.

1. REMOVE REAR WHEEL

2. SEPARATE REAR DISC BRAKE CALIPER ASSEMBLY LH

(a) Remove the bolt, and separate the flexible hose from the shock absorber.

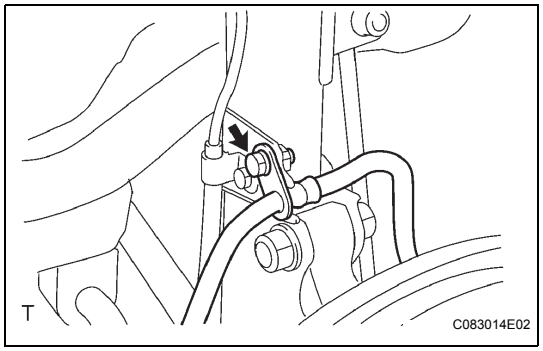

(b) Remove the 2 bolts and separate the rear disc brake caliper assembly LH.
NOTICE:
Use a wire or an equivalent to keep the brake caliper from hanging down by the flexible hose.

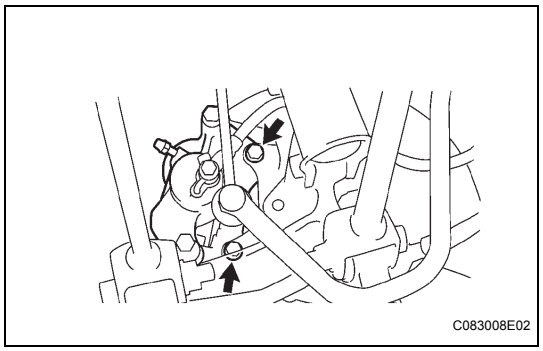

3. REMOVE REAR DISC

4. DISCONNECT SKID CONTROL SENSOR

(a) Disconnect the skid control sensor connector.

5. REMOVE REAR AXLE HUB & BEARING ASSEMBLY LH

(a) Remove the 4 bolts and rear axle hub & bearing assembly LH.

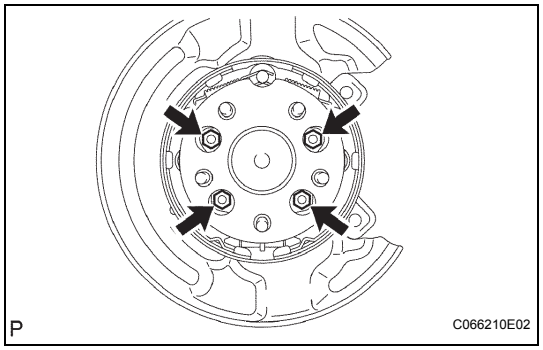

6. SEPARATE STRUT ROD ASSEMBLY REAR

(a) Remove the bolt and nut, and the strut rod assembly rear (rear axle carrier side) from the rear axle carrier sub-assembly LH.
HINT:
When removing the bolt, keep the nut from rotating.

7. SEPARATE REAR SUSPENSION ARM ASSEMBLY NO.2 LH

(a) Remove the bolt and nut, and separate the rear suspension arm assembly No.2 LH (rear axle carrier side) from the rear axle carrier sub-assembly LH.
HINT:
When removing the bolt, keep the nut from rotating.

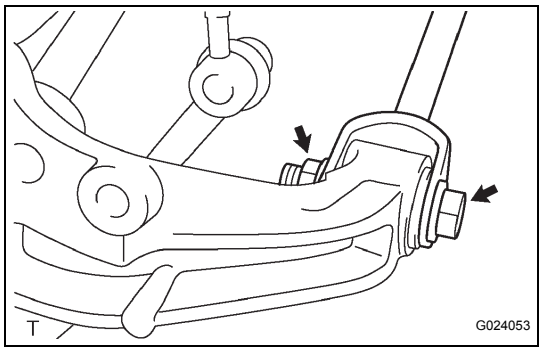

AH

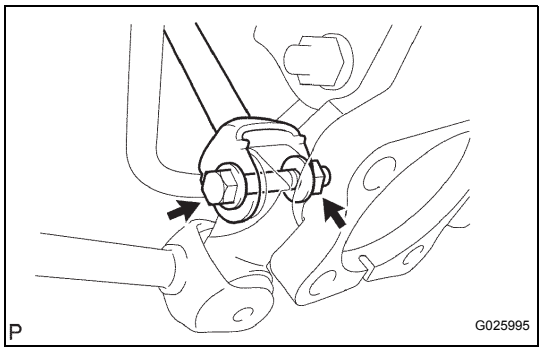

8. SEPARATE REAR SUSPENSION ARM ASSEMBLY NO.1 LH

(a) Remove the bolt and nut, separate the rear suspension arm assembly No.1 LH (rear axle carrier side) from the rear axle carrier sub-assembly.
HINT:
When removing the bolt, keep the nut from rotating.

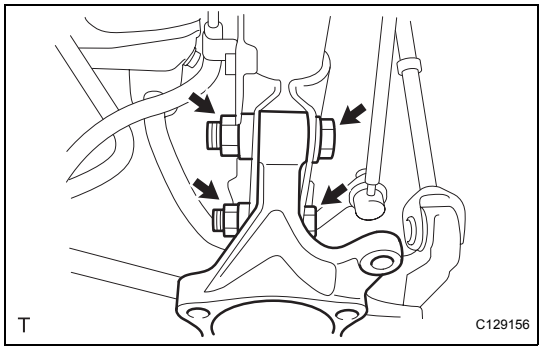

9. REMOVE REAR AXLE CARRIER SUB-ASSEMBLY LH

(a) Remove the 2 bolts and 2 nuts, and remove the rear axle carrier sub-assembly LH from the shock absorber.

INSTALLATION

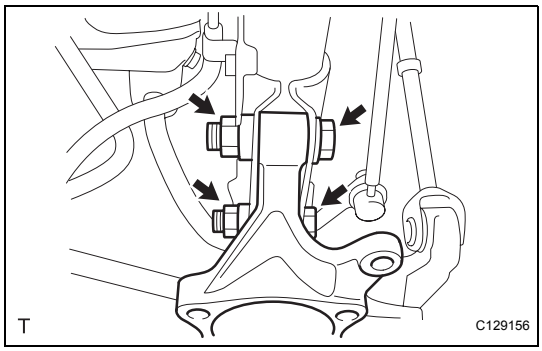

1. INSTALL REAR AXLE CARRIER SUB-ASSEMBLY LH

(a) Install the rear axle carrier sub-assembly LH with the 2 bolts and 2 nuts to the shock absorber.
Torque: 255 N*m (2.600 kgf*cm, 188 ft.*lbf)

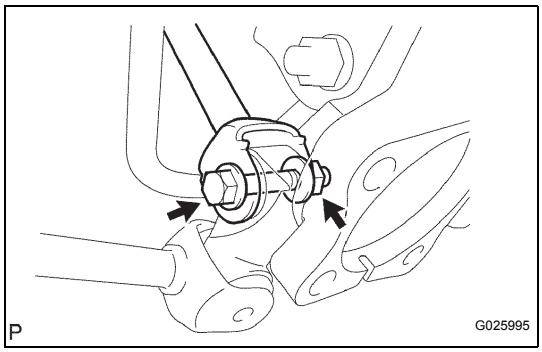

2. TEMPORARILY TIGHTEN REAR SUSPENSION ARM ASSEMBLY NO.1 LH

(a) Temporarily tighten the rear suspension arm assembly No.1 LH with the bolt and nut.
HINT:
Insert the bolt from the rear side of the vehicle and temporarily tighten the bolt.

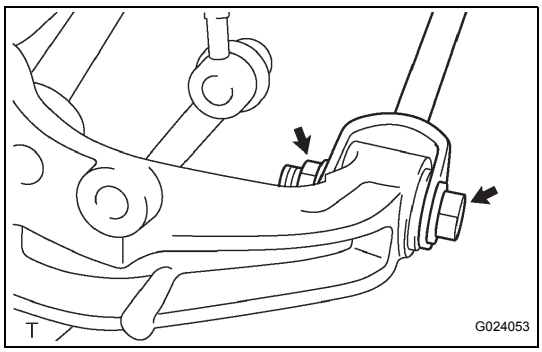

3. TEMPORARILY TIGHTEN REAR SUSPENSION ARM ASSEMBLY NO.2 LH

(a) Temporarily tighten the rear suspension arm assembly No.2 LH with the bolt and nut.
HINT:
Insert the bolt from the rear side of the vehicle and temporarily tighten the bolt.

4. **TEMPORARILY TIGHTEN STRUT ROD ASSEMBLY REAR**
   (a) Temporarily tighten the strut assembly rear with the bolt and nut.
   HINT:
   Insert the bolt from the inside of the vehicle and temporarily tighten the bolt.

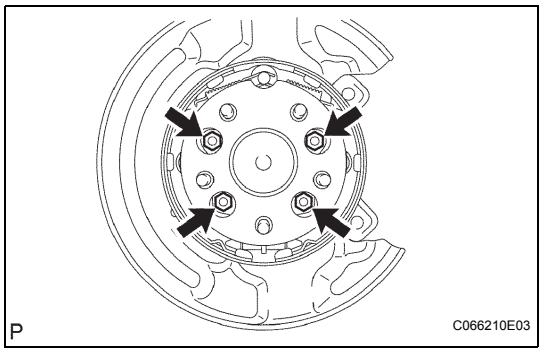

5. **INSTALL REAR AXLE HUB & BEARING ASSEMBLY LH**
   (a) Install the hub & bearing assembly LH with the 4 bolts.
   Torque: 80 N*m (816 kgf*cm, 59 ft.*lbf)

6. **INSPECT REAR AXLE HUB BEARING LOOSENESS (See page AH-15)**

7. **INSPECT REAR AXLE HUB RUNOUT (See page AH-15)**

8. **CONNECT SKID CONTROL SENSOR**
   (a) Connect the skid control sensor connector.
   NOTICE:
   Do not twist the sensor wire when connecting it.

9. **INSTALL REAR DISC**

10. **INSTALL REAR DISC BRAKE CALIPER ASSEMBLY LH**
    (a) Install the rear disc brake caliper with the 2 bolts.
    Torque: 62 N*m (632 kgf*cm, 46 ft.*lbf)
    NOTICE:
    Do not twist the brake hose when installing the rear disc brake caliper assembly LH.

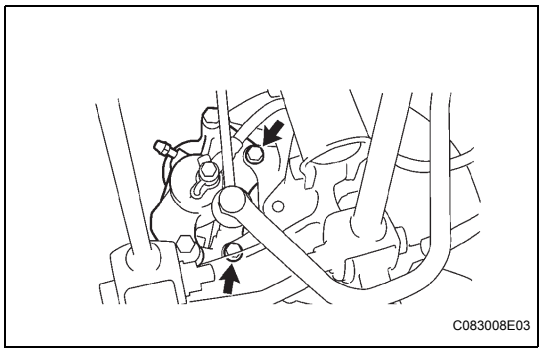

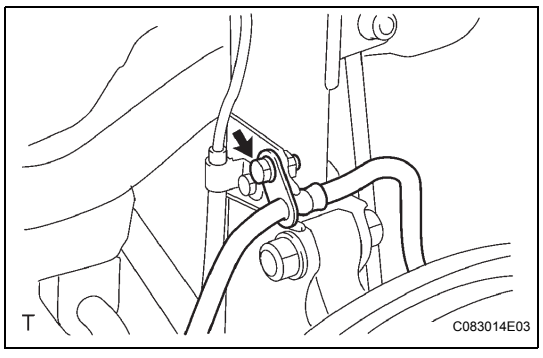

    (b) Install the rear flexible hose with the bolt.
    Torque: 19 N*m (192 kgf*cm, 14 ft.*lbf)

11. **INSTALL REAR WHEEL**
    Torque: 103 N*m (1.050 kgf*cm, 76 ft.*lbf)

12. **STABILIZE SUSPENSION (See page SP-47)**

13. **FULLY TIGHTEN REAR SUSPENSION ARM ASSEMBLY NO.1 LH (See page SP-47)**

14. **FULLY TIGHTEN REAR SUSPENSION ARM ASSEMBLY NO.2 LH (See page SP-48)**

15. **FULLY TIGHTEN STRUT ROD ASSEMBLY REAR (See page SP-41)**

16. **INSPECT AND ADJUST REAR WHEEL ALIGNMENT**
    (a) Inspect and adjust rear wheel alignment (See page SP-11).

17. **ABS SPEED SENSOR SIGNAL**
    (a) ABS WITH EBD & TRAC & VSC SYSTEM (See page BC-107)

(b) ABS WITH EBD SYSTEM (See page BC-11)

BRAKE SYSTEM

PRECAUTION

- Care must be taken to replace each part properly as it could affect the performance of the brake system and result in a driving hazard. Replace the parts with parts having the same part number or equivalent.
- It is very important to keep parts and the surrounding area clean when repairing the brake system.
- If the vehicle is equipped with a mobile communication system, refer to the precaution in the INTRODUCTION section.

PROBLEM SYMPTOMS TABLE

Use the table below to help find the cause of each problem. The numbers indicate the priority of the likely cause of the problem. Check each part in order. If necessary, replace these parts.

Symptom	Suspected Area	See page
Low pedal or spongy pedal	1. Fluid leaks in the brake system	BR-3
	2. Air in the brake system	BR-3
	3. Piston seals are worn or damaged (for front)	BR-26
	4. Piston seals are worn or damaged (for rear)	BR-33
	5. Master cylinder is faulty	BR-17
	6. Booster push rod clearance is out of adjustment	BR-22
Brake drag	1. Brake pedal free play (Minimal)	BR-10
	2. Parking brake lever travel clearance is out of adjustment	PB-1
	3. Parking brake cable is stuck	PB-12
	4. Parking brake shoe clearance is out of adjustment	PB-17
	5. Pad is cracked or distorted (for front)	BR-27
	6. Pad is cracked or distorted (for rear)	BR-34
	7. Piston is stuck (for front)	BR-26
	8. Piston is stuck (for rear)	BR-33
	9. Piston is frozen (for front)	BR-26
	10. Piston is frozen (for rear)	BR-33
	11. Booster push rod clearance is out of adjustment	BR-22
	12. Vacuum check valve	BR-22
	13. Vacuum leaks in the booster system	BR-20
	14. Master cylinder is faulty	BR-17
Brake pull	1. Piston is stuck (for front)	BR-26
	2. Piston is stuck (for rear)	BR-33
	3. Pad is oily (for front)	BR-27
	4. Pad is oily (for rear)	BR-34
	5. Piston is frozen (for front)	BR-26
	6. Piston is frozen (for rear)	BR-33
	7. Disc is scored (for front)	BR-27
	8. Disc is scored (for rear)	BR-34
	9. Pad is cracked or distorted (for front)	BR-27
	10. Pad is cracked or distorted (for rear)	BR-34

Symptom	Suspected Area	See page
Hard pedal but brake inefficient	1. Fluid leaks in the brake system	BR-3
	2. Air in the brake system	BR-3
	3. Pad is worn (for front)	BR-27
	4. Pad is worn (for rear)	BR-34
	5. Pad is cracked or distorted (for front)	BR-27
	6. Pad is cracked or distorted (for rear)	BR-34
	7. Pad is oily (for front)	BR-27
	8. Pad is oily (for rear)	BR-34
	9. Pad is glazed (for front)	BR-27
	10. Pad is glazed (for rear)	BR-34
	11. Disc is scored (for front)	BR-27
	12. Disc is scored (for rear)	BR-34
	13. Booster push rod clearance is out of adjustment	BR-22
	14. Vacuum check valve	BR-22
	15. Vacuum leaks in the booster system	BR-20
Brake noise	1. Pad is cracked or distorted (for front)	BR-27
	2. Pad is cracked or distorted (for rear)	BR-34
	3. Installation bolt is loosen (for front)	BR-25
	4. Installation bolt is loosen (for rear)	BR-32
	5. Disc is scored (for front)	BR-27
	6. Disc is scored (for rear)	BR-34
	7. Pad support plate is loosen (for front)	BR-25
	8. Pad support plate is loosen (for rear)	BR-32
	9. Sliding pin is worn (for front)	BR-25
	10. Sliding pin is worn (for rear)	BR-32
	11. Pad is dirty (for front)	BR-27
	12. Pad is dirty (for rear)	BR-34
	13. Pad is glazed (for front)	BR-27
	14. Pad is glazed (for rear)	BR-34
	15. Anti-squeal shim is damaged (for front)	BR-25
	16. Anti-squeal shim is damaged (for rear)	BR-32

BRAKE FLUID

BLEEDING

HINT:
If any work is performed on the brake system or if air in the brake lines is suspected, bleed the air from the brake system.
NOTICE:
Wash brake fluid off immediately if it adheres to any painted surface.

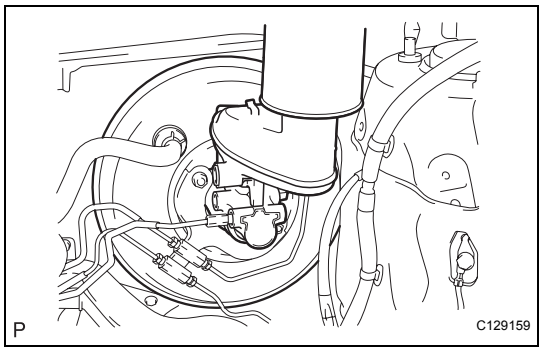

1. FILL RESERVOIR WITH BRAKE FLUID

(a) Fill the reservoir with brake fluid.
Fluid:
SAE J1703 or FMVSS No. 116 DOT3

2. BLEED MASTER CYLINDER

HINT:
If the master cylinder has been disassembled or if the reservoir has become empty, bleed the air from the master cylinder.

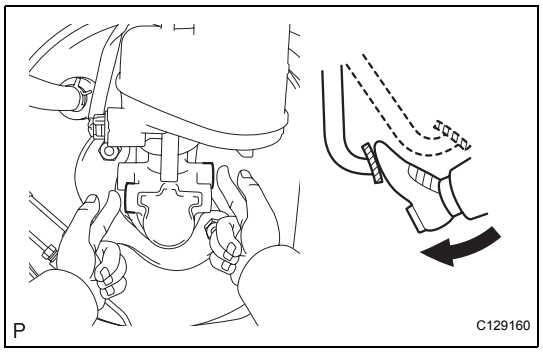

(a) Disconnect the brake lines from the master cylinder.
SST 09023-00101
(b) Slowly depress and hold the brake pedal.

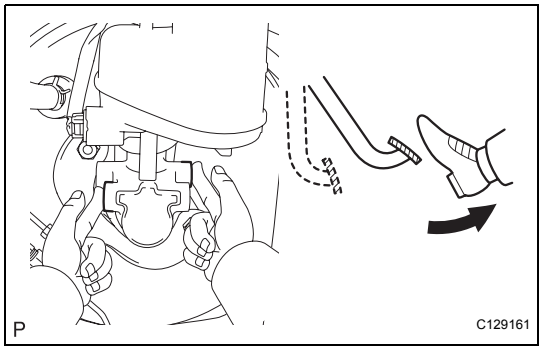

(c) Cover the outer holes with your fingers, and release the brake pedal.
(d) Repeat the above bleeding operation several times until the air in the master cylinder is temporary bled out.
(e) Connect the brake lines to the master cylinder.
SST 09023-00101
Torque: 15 N*m (155 kgf*cm, 11 ft.*lbf)

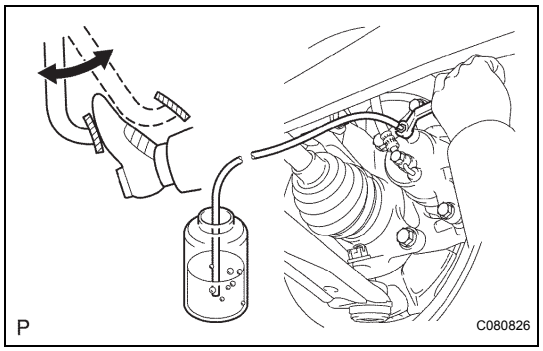

3. BLEED BRAKE LINE

(a) Connect the vinyl tube to the bleeder plug.
(b) Depress the brake pedal several times, then loosen the bleeder plug with the pedal depressed.
(c) When fluid stops coming out, tighten the bleeder plug, then release the brake pedal. (Procedure "B")
(d) Repeat the above bleeding operation until all air in the fluid is completely bled out.
(e) Completely tighten the bleeder plug.
Torque: 8.3 N*m (85 kgf*cm, 73 in.*lbf)

(f) Repeat the above procedures for each wheel to bleed the air from the brake line.

4. BLEED ABS & TRACTION ACTUATOR ASSEMBLY (w/ VSC)

NOTICE:

After bleeding the air from the brake system, if the height or feel of the brake pedal cannot be obtained, bleed the air from the brake actuator assembly with a intelligent tester by following the procedures below.

(a) Depress the brake pedal more than 20 times with the engine off.

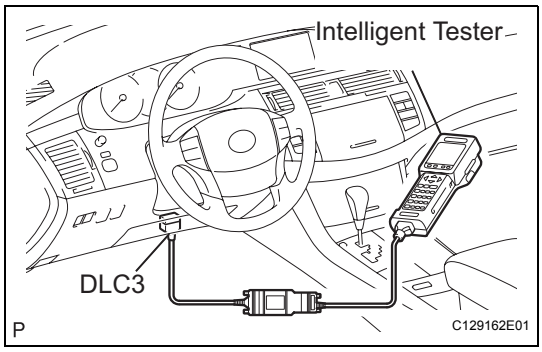

(b) Connect the intelligent tester to the DLC3, and turn the ignition switch on (IG).

NOTICE:

Do not start the engine.

(c) Select "AIR BLEEDING" on the intelligent tester.

HINT:

Refer to the intelligent tester operator's manual for further details.

(d) Bleed the air from the brake line when "Step 1: Increase" appears on the intelligent tester display.

NOTICE:

- **Bleed the air by following the steps displayed on the intelligent tester.**
- **Make sure that the master cylinder reservoir tank does not become empty of brake fluid.**

(1) Cannot the vinyl tube to either one of the bleeder plugs.

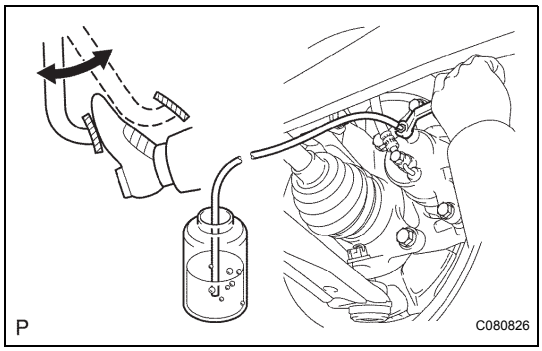

(2) Depress the brake pedal several times, then loosen the bleeder plug connected to the vinyl tube with the pedal depressed.

(3) When fluid stops coming out, tighten the bleeder plug and release the brake pedal.

(4) Repeat the above bleeding operation until all air in the fluid is completely bled out.

(5) Tighten the bleeder plug completely.

Torque: 8.3 N*m (85 kgf*cm, 73 in.*lbf)

(6) Repeat the above procedures for each wheel to bleed the air from the brake line.

(e) Bleed the air from the suction line when "Step2: Inhalation" appears on the intelligent tester display.

NOTICE:

- **Bleed the air by following the steps displayed on the intelligent tester.**
- **Make sure that the master cylinder reservoir tank does not become empty of brake fluid.**

(1) Connect the vinyl tube to the bleeder plug at the right front wheel or the right rear wheel and loosen the bleeder plug.

(2) Operate the brake actuator assembly to bleed the air using the intelligent tester.
NOTICE:
- **This operation stops automatically after 4 seconds.**
- **At this time, be sure to release the brake pedal.**

(3) Check if the operation has stopped by referring to the intelligent tester display.
(4) Repeat the above bleeding operation until all air in the fluid is completely bled out.
(5) Completely tighten the bleeder plug.
Torque: 8.3 N*m (85 kgf*cm, 73 in.*lbf)
(6) Repeat the above procedures to bleed the air from the brake line for each wheel.

(f) Bleed the air from the pressure reduction line when "Step3: Decrease" appears on the intelligent tester display.
NOTICE:
- **Bleed the air by following the steps displayed on the intelligent tester.**
- **Make sure that the master cylinder reservoir tank does not become empty of brake fluid.**

(1) Connect the vinyl tube to either one of the bleeder plugs (Procedure "A").
(2) Loosen the bleeder plug.
(3) Using the intelligent tester, operate the brake actuator assembly, completely depress and hold the brake pedal (Procedure "B").
NOTICE:
- **This operation stops automatically after 4 seconds. When performing this procedure continuously, set an interval of at least 20 seconds.**
- **When the operation is complete, the brake pedal goes down sightly. This is a normal phenomenon caused when the solenoid opens.**
- **During this procedure, the pedal will feel heavy, but completely depress it so that the brake fluid comes out from the bleeder plug.**
- **Be sure to keep the brake pedal depressed. Do not repeatedly depress and release the pedal.**

(4) Tighten the bleeder plug, then release the brake pedal (Procedure "C").
(5) Repeat the above bleeding operation until all air in the fluid is completely bled out (See procedure "A" to "C").
(6) Completely tighten the bleeder plug.
Torque: 8.3 N*m (85 kgf*cm, 73 in.*lbf)
(7) Repeat the above procedures for each wheel to bleed the air from the brake line.

(g) Bleed the air from the brake line again when "Step4: Increase" appears on the intelligent tester display.
NOTICE:
- **Bleed the air by following the steps displayed on the intelligent tester.**
- **Make sure that the master cylinder reservoir tank does not become empty of brake fluid.**

(1) Connect the vinyl tube to either one of the bleeder plugs.

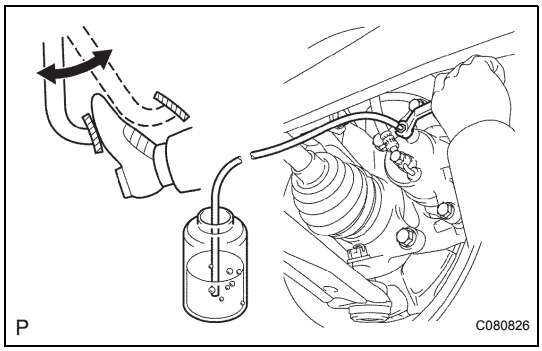

(2) Depress the brake pedal several times, then loosen the bleeder plug connected to the vinyl tube with the pedal depressed.
(3) When fluid stops coming out, tighten the bleeder plug, then release the brake pedal.
(4) Repeat the above bleeding operation until all air in the fluid is completely bled out.
(5) Completely tighten the bleeder plug.
Torque: 8.3 N*m (85 kgf*cm, 73 in.*lbf)
(6) Repeat the above procedures for each wheel to bleed the air from the brake line.

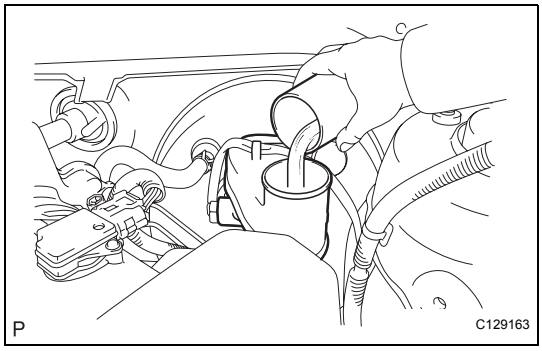

5. CHECK FLUID LEVEL IN RESERVOIR

(a) Check the fluid level and add fluid if necessary.
Fluid:
SAE J1703 or FMVSS No. 116 DOT3

BRAKE PEDAL

COMPONENTS

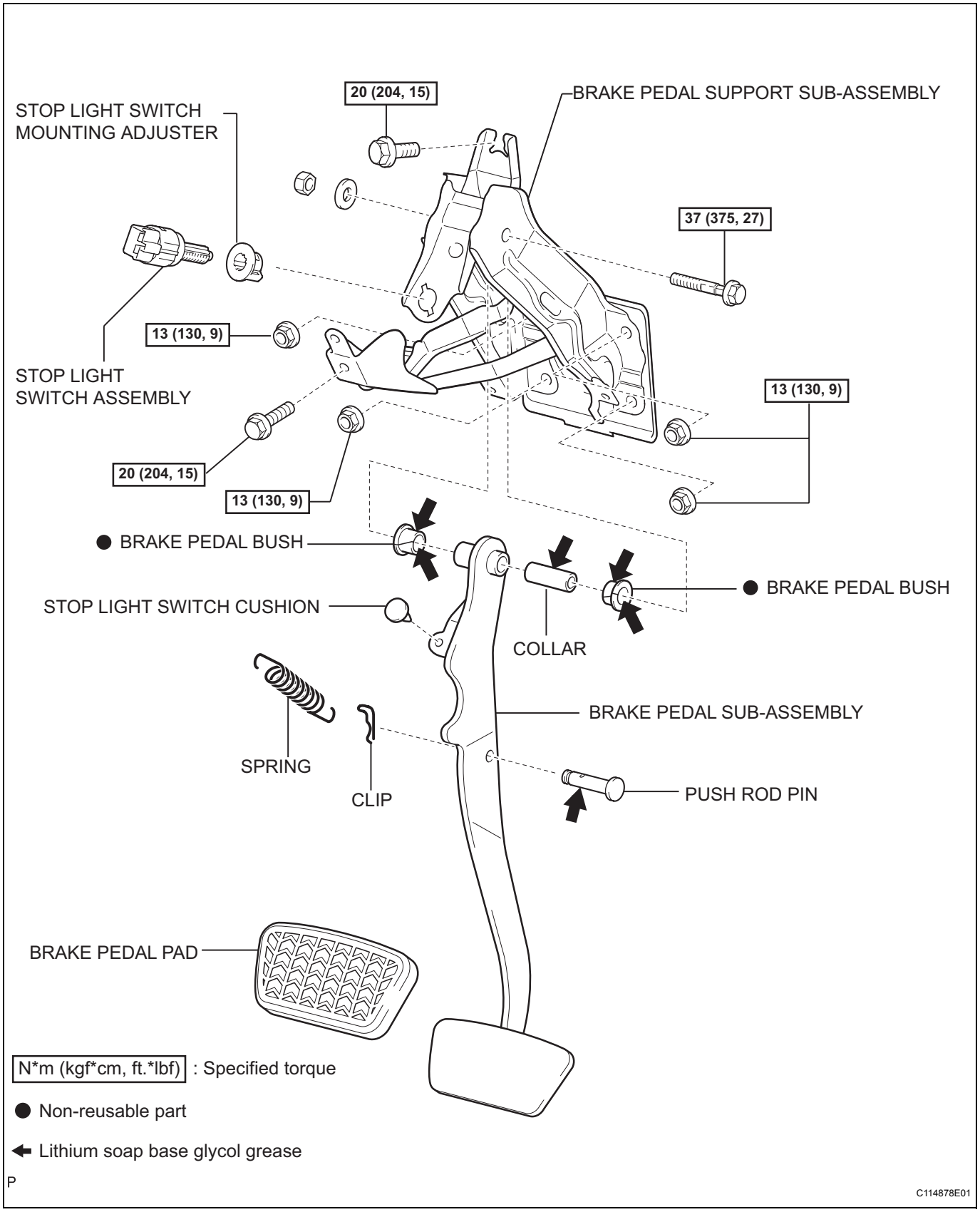

BR

REMOVAL

1. DISCONNECT BATTERY NEGATIVE TERMINAL (See page RS-303)
2. REMOVE WINDSHIELD WIPER ARM AND BLADE ASSEMBLY LH (See page WW-38)
3. REMOVE WINDSHIELD WIPER ARM AND BLADE ASSEMBLY RH (See page WW-38)
4. REMOVE COWL TOP VENTILATOR LOUVER (See page WW-38)
5. REMOVE WINDSHIELD WIPER MOTOR AND LINK ASSEMBLY (See page WW-38)
6. REMOVE COWL TOP PANEL OUTER (See page BR-20)
7. DRAIN BRAKE FLUID
8. REMOVE AIR CLEANER ASSEMBLY
9. REMOVE BRAKE MASTER WITH PLATE CYLINDER SUB-ASSEMBLY (See page BR-17)
10. DISCONNECT VACUUM HOSE ASSEMBLY (See page BR-21)
11. REMOVE FRONT BRAKE TUBE NO.5 (See page BR-21)
12. REMOVE FRONT DOOR SCUFF PLATE (See page IR-12)
13. REMOVE COWL SIDE TRIM SUB-ASSEMBLY (See page IR-12)
14. REMOVE INSTRUMENT SIDE PANEL (See page IP-14)
15. REMOVE INSTRUMENT PANEL FINISH LOWER PANEL (See page IP-12)
16. REMOVE INSTRUMENT PANEL AIR BAG ASSEMBLY LOWER NO.1
17. REMOVE INSTRUMENT CLUSTER FINISH PANEL GARNISH NO.1 (See page IP-9)
18. REMOVE INSTRUMENT CLUSTER FINISH PANEL GARNISH NO.2 (See page IP-9)
19. REMOVE INSTRUMENT CLUSTER FINISH PANEL SUB-ASSEMBLY CENTER
20. REMOVE INSTRUMENT CLUSTER FINISH PANEL SUB-ASSEMBLY (See page IP-10)
21. REMOVE COMBINATION METER ASSEMBLY (See page ME-70)
22. REMOVE PUSH ROD PIN (See page BR-21)
23. REMOVE BRAKE BOOSTER ASSEMBLY (See page BR-22)

24. REMOVE BRAKE BOOSTER GASKET

25. REMOVE INSTRUMENT PANEL JUNCTION BLOCK ASSEMBLY

26. REMOVE BRAKE PEDAL RETURN SPRING (See page BR-21)

27. REMOVE BRAKE PEDAL SUPPORT SUB-ASSEMBLY

(a) Disconnect the stop light switch connector and wire harness clamp.

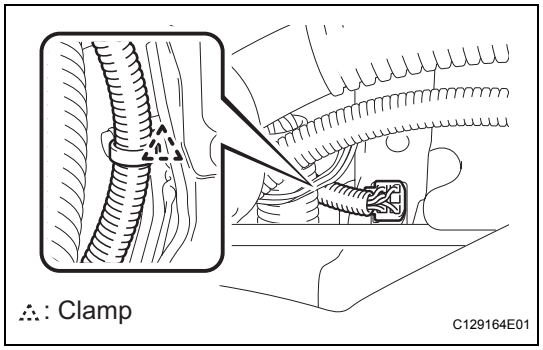

(b) Remove the 2 bolts and brake pedal support sub-assembly.

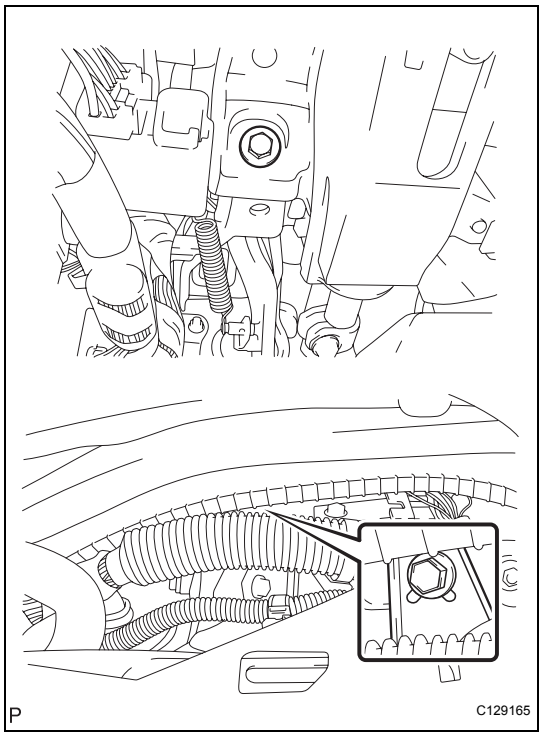

DISASSEMBLY

1. REMOVE STOP LIGHT SWITCH ASSEMBLY

(a) Turn the stop light switch assembly counterclockwise and remove the stop light switch assembly.

(b) Remove the stop light switch mounting adjuster.

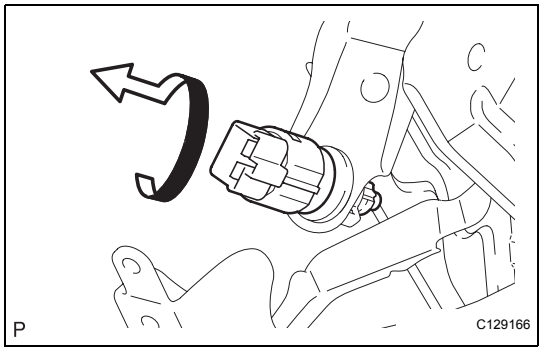

BR

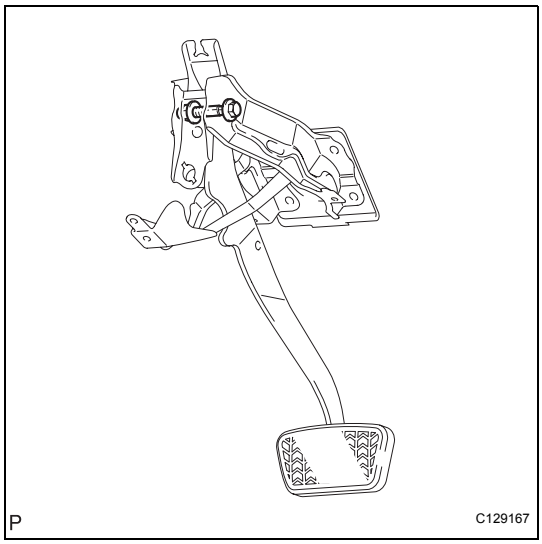

2. REMOVE BRAKE PEDAL SUB-ASSEMBLY

(a) Remove the nut, bolt, washer and brake pedal sub-assembly from the brake pedal support sub-assembly.

(b) Remove the 2 brake pedal bushes and collar from the brake pedal sub-assembly.

3. REMOVE BRAKE PEDAL PAD

ADJUSTMENT

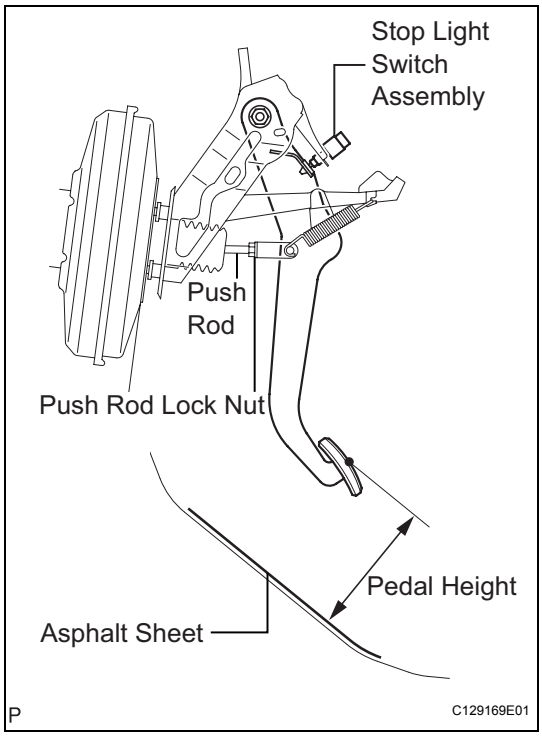

1. CHECK AND ADJUST BRAKE PEDAL HEIGHT

(a) Check brake pedal height.

Pedal height from asphalt sheet:
143.3 to 153.3 mm (5.641 to 6.035 in.)

(b) Adjust brake pedal height.

(1) Remove instrument panel sub-assembly LWR No.1 and instrument panel airbag assembly LWR No.1.

(2) Disconnect the stop light switch assembly connector from the stop light switch assembly.

(3) Turn the stop light switch assembly counterclockwise and remove the stop light switch assembly.

(4) Adjust the pedal height by turning the pedal push rod.

(5) Tighten the push rod lock nut.

Torque: 26 N*m (265 kgf*cm, 19 ft.*lbf)

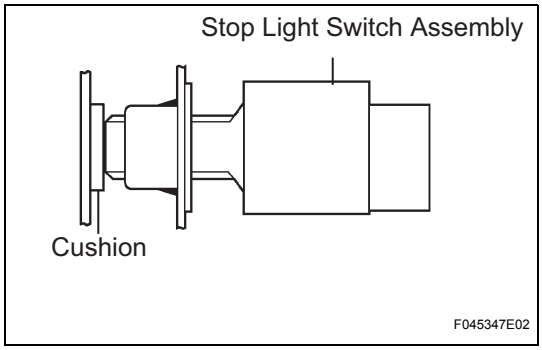

(6) Insert the stop light switch assembly until the body hits the cushion.

NOTICE:
When inserting the stop light switch assembly, support the pedal from behind so that the pedal is not pushed in.

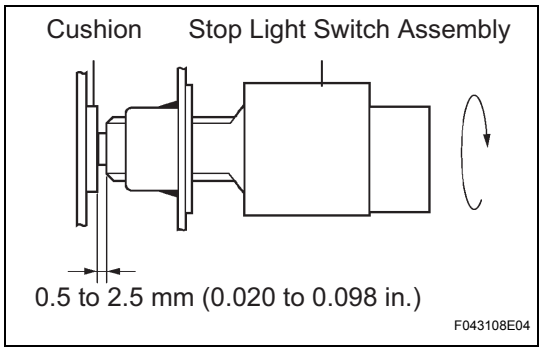

(7) Make a quarter turn clockwise to install the stop light switch assembly.
NOTICE:
- **When inserting the stop light switch assembly, support the pedal from behind so that the pedal is not pushed in.**
- **The turning torque for installing the stop light switch assembly.**

Torque: 1.5 N*m (15 kgf*cm, 13 in.*lbf) or less

(8) Connect the stop light switch connector to the stop light switch assembly.
(9) Check the protrusion of the rod.
Protrusion of the rod:
0.5 to 2.5 mm (0.020 to 0.098 in.)
(10) Install instrument panel sub-assembly LWR No.1 and instrument panel airbag assembly LWR No.1.

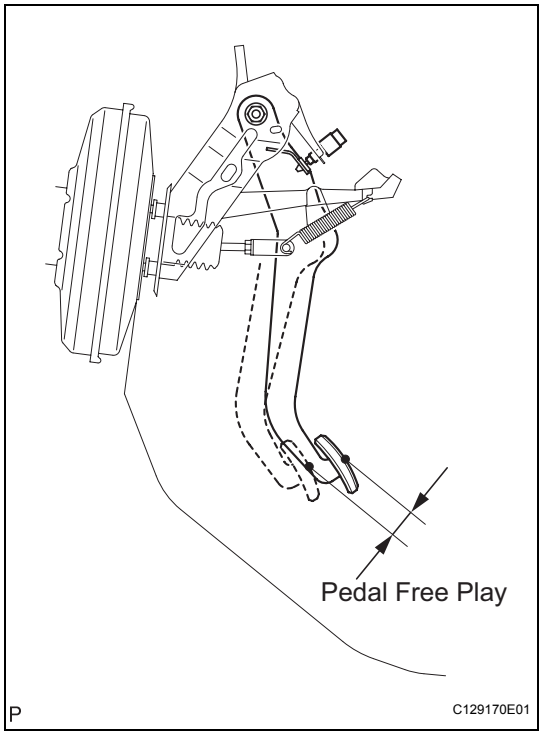

2. CHECK PEDAL FREE PLAY
(a) Stop the engine and depress the brake pedal several times until no vacuum remains in the booster.
(b) Press the pedal until resistance is felt. Measure the distance as shown in the illustration.
Pedal free play:
1.0 to 6.0 mm (0.039 to 0.236 in.)
If incorrect, proceed to the following step.
(1) Check the stop light switch clearance.
Stop light switch clearance:
0.5 to 2.5 mm (0.020 to 0.098 in.)
If correct, the pedal free play is OK.
If incorrect, adjust the stop light switch clearance.

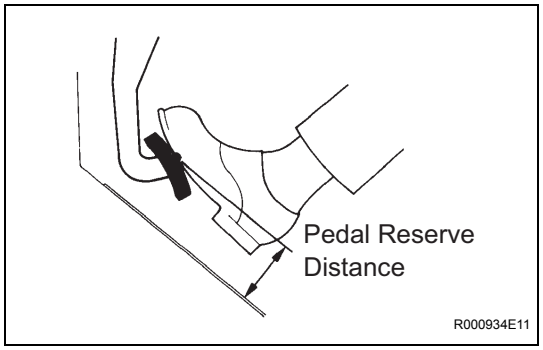

3. CHECK PEDAL RESERVE DISTANCE
(a) Release the parking brake pedal.
With the engine running, depress the brake pedal and measure the pedal reserve distance as shown in the illustration.
Pedal reserve distance from asphalt sheet at 490 N (50 kgf, 110 lbf):
More than 77 mm (3.0 in.)
If incorrect, troubleshoot the brake system.

REASSEMBLY

1. INSTALL BRAKE PEDAL PAD

2. INSTALL BRAKE PEDAL SUB-ASSEMBLY

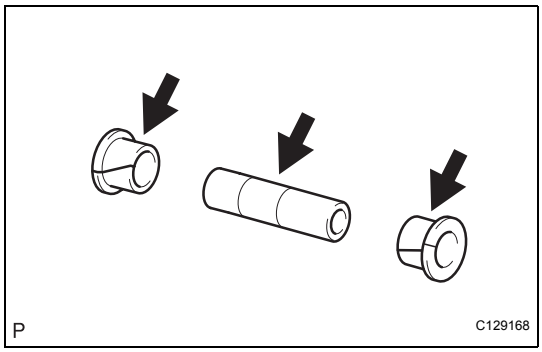

(a) Install 2 new brake pedal bushes and the collar to the brake pedal sub-assembly.
HINT:
Apply lithium soap base glycol grease to the parts indicated by arrows.

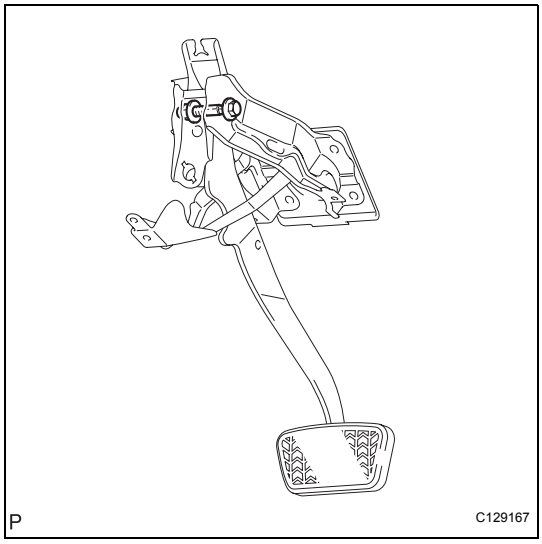

(b) Install the brake pedal sub-assembly with the bolt, washer and nut.
Torque: 37 N*m (375 kgf*cm, 27 ft.*lbf)

3. INSTALL STOP LIGHT SWITCH ASSEMBLY

(a) Install the stop light switch mounting adjuster.
(b) Insert the stop light switch assembly until the body hits the cushion.
(c) Make a quarter turn clockwise to install the stop light switch assembly.
(d) Connect the stop light switch connector.
NOTICE:
- **When inserting the stop light switch assembly, support the pedal from behind so that the pedal is not pushed in.**
- **The turning torque for installing the stop light switch assembly**

Torque: 1.5 N*m (15 kgf*cm, 13 in.*lbf) or less
HINT:
After adjusting the brake pedal height, adjust the stop light switch assembly.

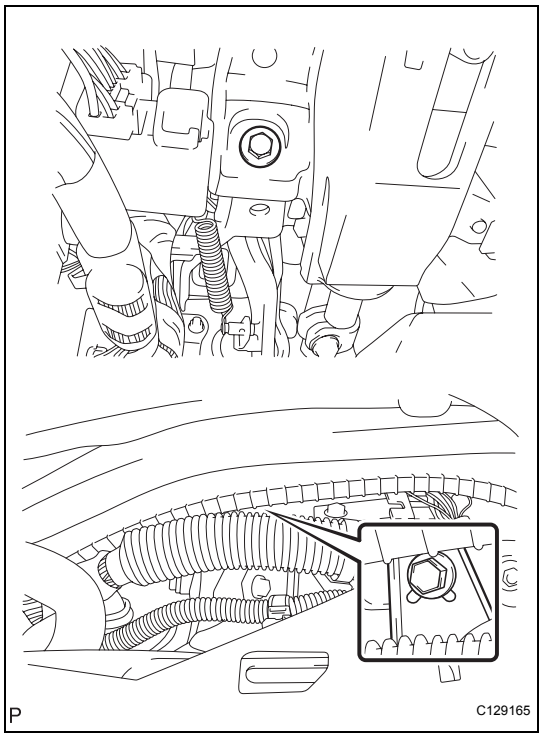

INSTALLATION

1. **INSTALL BRAKE PEDAL SUPPORT SUB-ASSEMBLY**
   (a) Temporarily install the brake pedal support sub-assembly with the 2 bolts.
   (b) Install the brake booster gasket (See page BR-22).
   (c) Install the brake booster assembly (See page BR-22).
   (d) Fully tighten the 2 bolts.
   Torque: 20 N*m (204 kgf*cm, 15 ft.*lbf)
2. **INSTALL MASTER CYLINDER PUSH ROD CLEVIS (See page BR-22)**
3. **INSTALL PUSH ROD PIN (See page BR-22)**
4. **INSTALL BRAKE PEDAL RETURN SPRING**
5. **INSTALL COMBINATION METER ASSEMBLY**
6. **INSTALL INSTRUMENT CLUSTER FINISH PANEL SUB-ASSEMBLY**
7. **INSTALL INSTRUMENT CLUSTER FINISH PANEL SUB-ASSEMBLY CENTER**
8. **INSTALL INSTRUMENT CLUSTER FINISH PANEL GARNISH NO.2**
9. **INSTALL INSTRUMENT CLUSTER FINISH PANEL GARNISH NO.1**
10. **INSTALL FRONT BRAKE TUBE NO.5 (See page BR-23)**
11. **CONNECT VACUUM HOSE ASSEMBLY (See page BR-23)**
12. **INSPECT AND ADJUST BRAKE BOOSTER PUSH ROD (See page BR-23)**
13. **INSTALL BRAKE MASTER WITH PLATE CYLINDER SUB-ASSEMBLY (See page BR-23)**
14. **FILL RESERVOIR WITH BRAKE FLUID (See page BR-3)**
15. **BLEED MASTER CYLINDER (See page BR-3)**
16. **BLEED BRAKE LINE (See page BR-3)**
17. **INSTALL AIR CLEANER ASSEMBLY**
18. **CHECK FLUID LEVEL IN RESERVOIR (See page BR-6)**
19. **CHECK BRAKE FLUID LEAKAGE**
20. **INSTALL COWL TOP PANEL OUTER (See page BR-23)**
21. **INSTALL WINDSHIELD WIPER MOTOR AND LINK ASSEMBLY (See page WW-40)**
22. **INSTALL WINDSHIELD WIPER ARM AND BLADE ASSEMBLY RH (See page WW-40)**

23. **INSTALL WINDSHIELD WIPER ARM AND BLADE ASSEMBLY LH (See page WW-41)**
24. **CHECK AND ADJUST BRAKE PEDAL HEIGHT (See page BR-10)**
25. **CHECK PEDAL FREE PLAY (See page BR-11)**
26. **CHECK PEDAL RESERVE DISTANCE (See page BR-11)**
27. **INSTALL INSTRUMENT PANEL AIR BAG ASSEMBLY LOWER NO.1**
28. **INSTALL INSTRUMENT PANEL FINISH LOWER PANEL**
29. **INSTALL INSTRUMENT SIDE PANEL**
30. **INSTALL COWL SIDE TRIM SUB-ASSEMBLY**
31. **INSTALL FRONT DOOR SCUFF PLATE**
32. **CONNECT BATTERY NEGATIVE TERMINAL**
33. **INSPECT SRS WARNING LIGHT (See page RS-306)**
34. **PERFORM INITIALIZATION**
    (a) Some systems need initialization after reconnecting the negative battery cable.

BRAKE MASTER CYLINDER

COMPONENTS

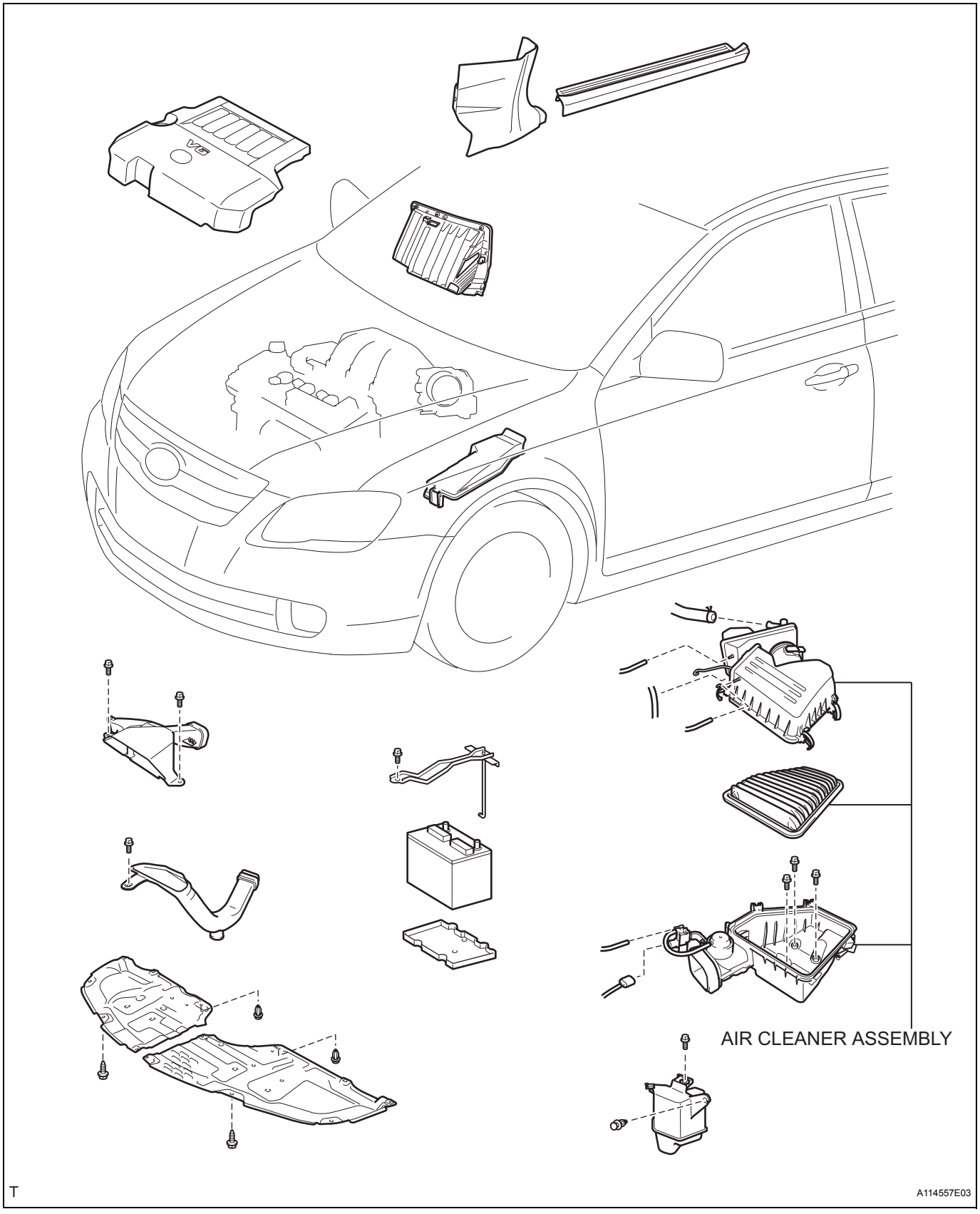

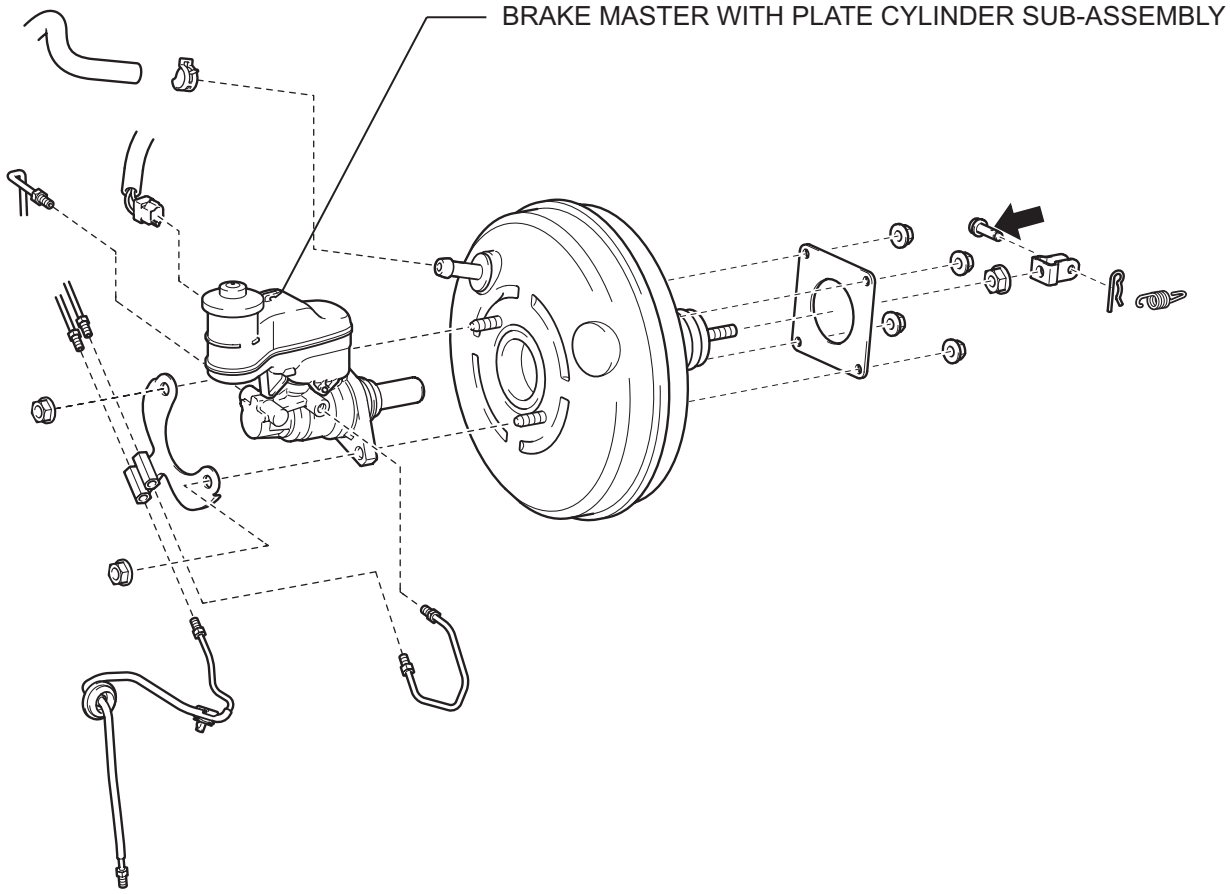

P

C114879E01

REMOVAL

1. **DRAIN BRAKE FLUID**
   NOTICE:
   Wash brake fluid off immediately if it adheres to any painted surface.

2. **REMOVE AIR CLEANER ASSEMBLY**

3. **REMOVE BRAKE MASTER WITH PLATE CYLINDER SUB-ASSEMBLY**
   (a) Disconnect the level warning switch connector.
   (b) Using SST, disconnect the 6 brake tubes from the brake master w/ plate cylinder sub-assembly.
   SST 09023-00101

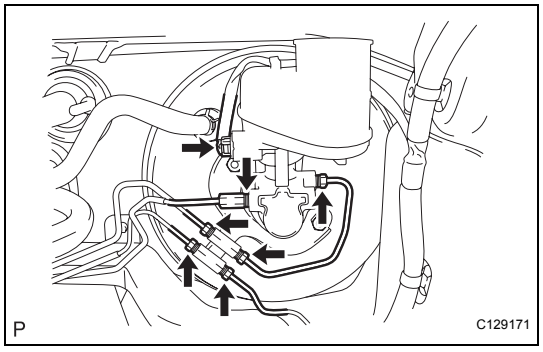

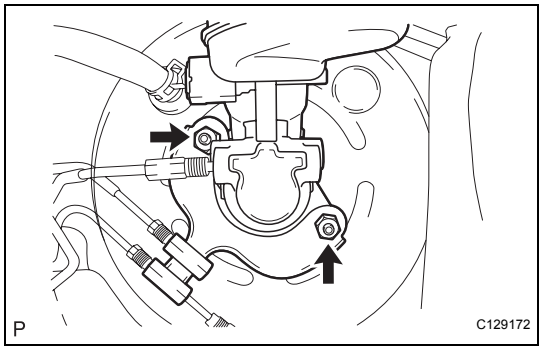

   (c) Remove the 2 nuts, and pull out the 2-way and brake master w/ plate cylinder sub-assembly.

INSPECTION

1. INSPECT AND ADJUST BRAKE BOOSTER PUSH ROD

NOTICE:

Make an adjustment with the brake booster assembly having no vacuum. (Depress the brake pedal several times with the engine off.)

HINT:

Adjustment of the brake booster push rod is required if the brake master cylinder sub-assembly is replaced with a new one. The adjustment is not necessary if the brake master cylinder sub-assembly is reinstalled and the brake booster assembly is replaced with a new one.

(a) Apply the chalk to the tip of an accessory tool.

HINT:

An accessory tool is enclosed with a new brake master cylinder sub-assembly.

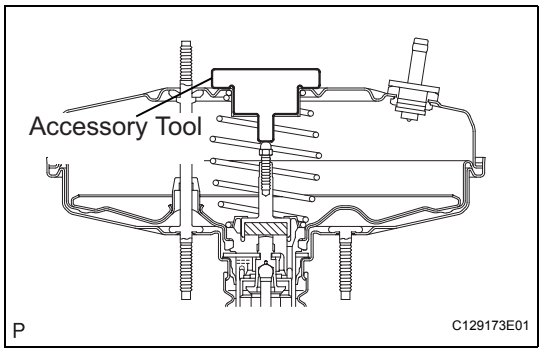

(b) Place the accessory tool on the brake booster assembly.

(c) Measure the clearance between the brake booster push rod and accessory tool.

Clearance:

0 mm (0 in.)

HINT:

Adjust the clearance in the following cases:

- If there is a clearance between the accessory tool and the shell of the brake booster (floating accessory tool), the push rod is protruding too far.
- If the chalk does not stick on the tip of the brake booster push rod, the push rod protrusion is insufficient.

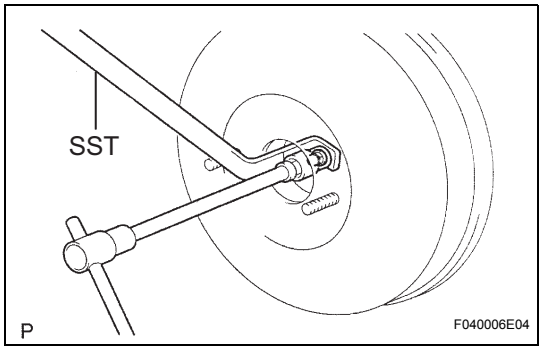

(d) If clearance is outside the specified range, fix the push rod using SST and adjust the length of the protruding adjusting bolt.

SST 09737-00020

HINT:

When adjusting the push rod, depress the brake pedal sufficiently so that the push rod sticks out.

BR

INSTALLATION

1. INSTALL BRAKE MASTER WITH PLATE CYLINDER SUB-ASSEMBLY

(a) Install the master cylinder sub-assembly and 2-way with the 2 nuts.

Torque: 13 N*m (130 kgf*cm, 9 ft.*lbf)

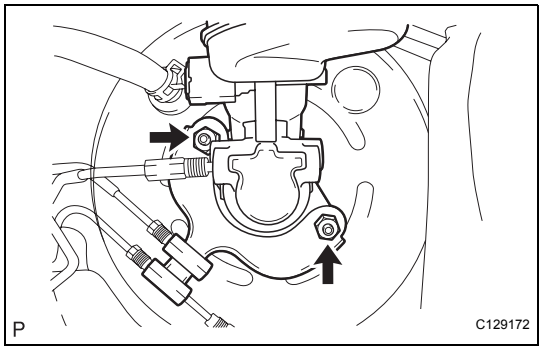

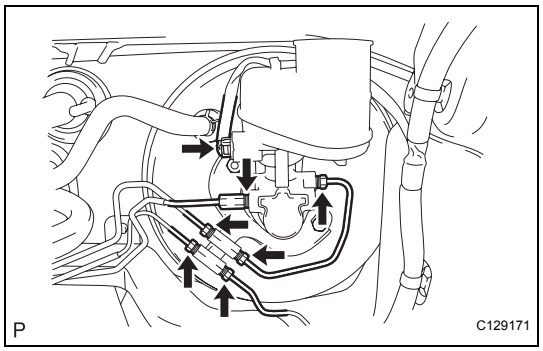

(b) Using SST, connect the 6 brake tubes to the master cylinder sub-assembly.
Torque: 15 N*m (155 kgf*cm, 11 ft.*lbf)
SST 09023-00101

(c) Connect the level warning switch connector.

2. **FILL RESERVOIR WITH BRAKE FLUID (See page BR-3)**
3. **BLEED MASTER CYLINDER (See page BR-3)**
4. **BLEED BRAKE LINE (See page BR-3)**
5. **INSTALL AIR CLEANER ASSEMBLY**
6. **CHECK FLUID LEVEL IN RESERVOIR (See page BR-6)**
7. **CHECK BRAKE FLUID LEAKAGE**

BRAKE BOOSTER

COMPONENTS

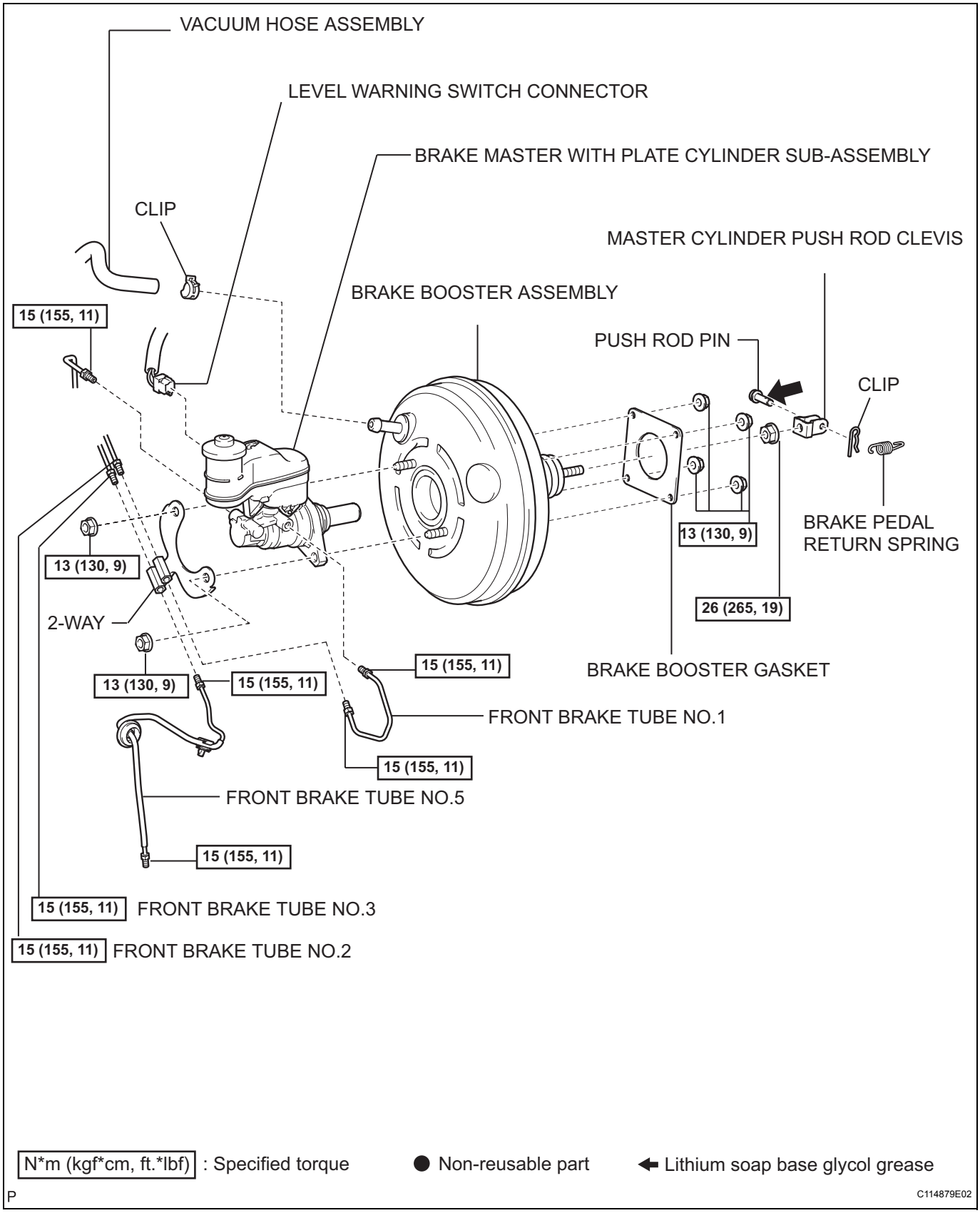

BR

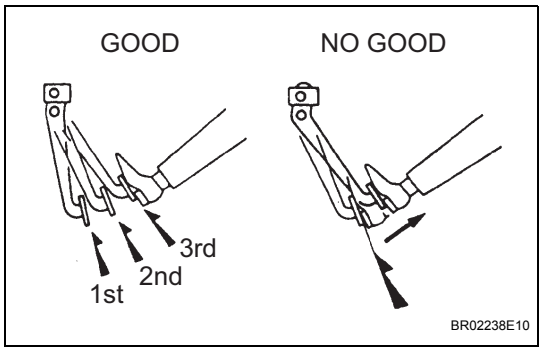

ON-VEHICLE INSPECTION

1. INSPECT BRAKE BOOSTER

(a) Air tightness check.

(1) Start the engine and stop it after 1 or 2 minutes. Slowly depress the brake pedal several times.
HINT:
If the pedal can be depressed to the floor the first time, but on the 2nd and 3rd time cannot be depressed as far, the booster is airtight.

(2) Depress the brake pedal while the engine is running, and stop the engine with the pedal depressed.
HINT:
If there is no change in the pedal reserve distance while holding the pedal for 30 seconds, the booster is airtight.

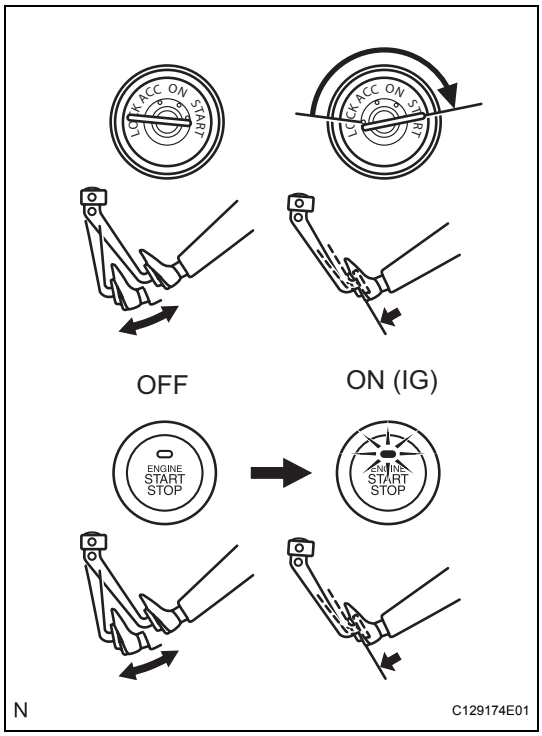

(b) Operating check.

(1) Depress the brake pedal several times with the ignition switch off and check that there is no change in the pedal reserve distance when the pedal is depressed.

(2) Start the engine with the brake pedal depressed.
HINT:
If the pedal goes down slightly, operation is normal.

REMOVAL

1. **REMOVE WINDSHIELD WIPER ARM AND BLADE ASSEMBLY LH (See page WW-38)**
2. **REMOVE WINDSHIELD WIPER ARM AND BLADE ASSEMBLY RH (See page WW-38)**
3. **REMOVE COWL TOP VENTILATOR LOUVER (See page WW-38)**
4. **REMOVE WINDSHIELD WIPER MOTOR AND LINK ASSEMBLY (See page WW-38)**
5. **REMOVE COWL TOP PANEL OUTER**
   (a) Remove the 4 bolts, 2 nuts and cowl top panel outer from the body.
6. **DRAIN BRAKE FLUID**
   NOTICE:
   Wash brake fluid off immediately if it adheres to any painted surface.
7. **REMOVE AIR CLEANER ASSEMBLY**
8. **REMOVE BRAKE MASTER WITH PLATE CYLINDER SUB-ASSEMBLY**
   SST 09023-00101
9. **DISCONNECT VACUUM HOSE ASSEMBLY**
   (a) Slide the clip and disconnect the vacuum hose from the brake booster assembly.

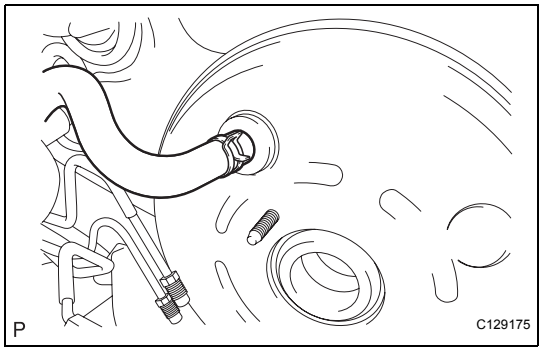

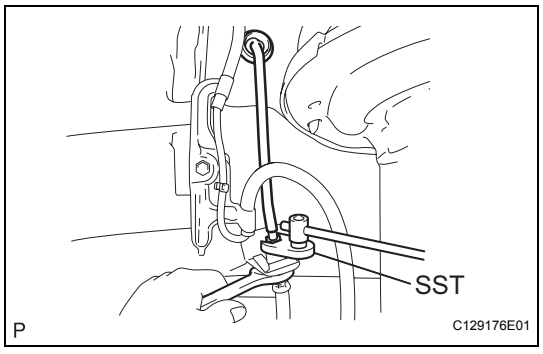

10. **REMOVE FRONT BRAKE TUBE NO.5**
    (a) Using SST, remove front brake tube No.5.
    SST 09023-00101
11. **REMOVE FRONT DOOR SCUFF PLATE (See page IR-12)**
12. **REMOVE COWL SIDE TRIM SUB-ASSEMBLY (See page IR-12)**
13. **REMOVE INSTRUMENT SIDE PANEL (See page IP-14)**
14. **REMOVE INSTRUMENT PANEL FINISH LOWER PANEL (See page IP-12)**
15. **REMOVE INSTRUMENT PANEL AIR BAG ASSEMBLY LOWER NO.1**

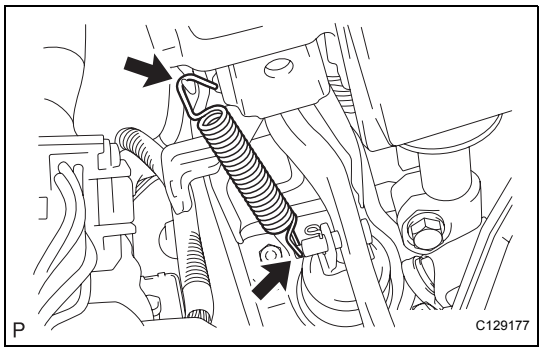

16. REMOVE BRAKE PEDAL RETURN SPRING

(a) Remove the brake pedal return spring.

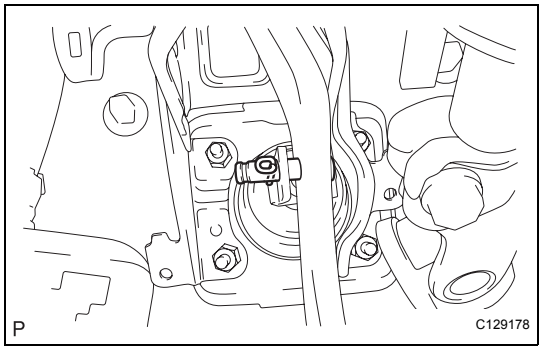

17. REMOVE PUSH ROD PIN

(a) Remove the clip and push rod pin.

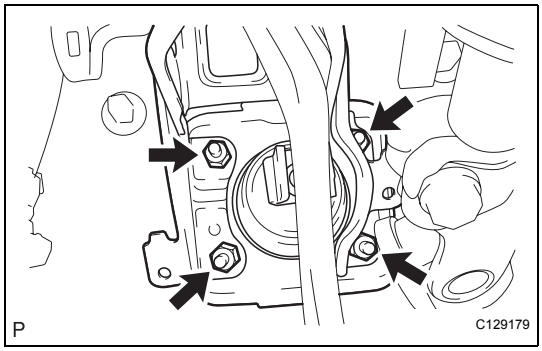

18. REMOVE BRAKE BOOSTER ASSEMBLY

(a) Remove the 4 nuts.

(b) Pull out the brake booster assembly.

NOTICE:

Do not damage the brake tubes and the wire harness.

19. REMOVE BRAKE BOOSTER GASKET

INSPECTION

1. INSPECT BRAKE VACUUM CHECK VALVE ASSEMBLY

(a) Check the vacuum check valve.

(1) Slide the clip and disconnect the vacuum hose.

(2) Remove the vacuum check valve.

(3) Check that there is ventilation from the booster to the engine, and no ventilation from the engine to the booster.

(4) If any fault is found, replace the vacuum check valve.

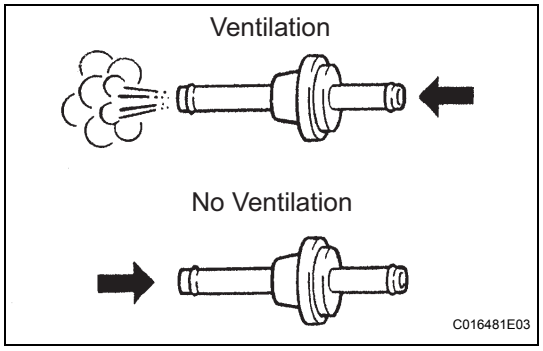

INSTALLATION

1. INSTALL BRAKE BOOSTER GASKET

(a) Install a new brake booster gasket to the brake booster.

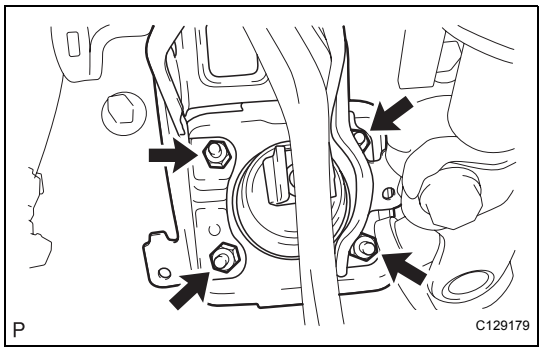

2. INSTALL BRAKE BOOSTER ASSEMBLY

(a) Install the brake booster with the 4 nuts.
Torque: 13 N*m (130 kgf*cm, 9 ft.*lbf)
NOTICE:
Do not damage the brake tubes and the wire harness.

3. INSTALL MASTER CYLINDER PUSH ROD CLEVIS

(a) Install the push rod clevis and the push rod lock nut.
HINT:
After adjusting the brake pedal height, tighten the lock nut.

4. INSTALL PUSH ROD PIN

(a) Apply lithium soap base glycol grease to the parts indicated by arrows (See page BR-19).

(b) Install the push rod pin and clip.

5. INSTALL BRAKE PEDAL RETURN SPRING

6. INSTALL INSTRUMENT PANEL AIR BAG ASSEMBLY LOWER NO.1

7. INSTALL INSTRUMENT PANEL FINISH LOWER PANEL

8. INSTALL INSTRUMENT SIDE PANEL

9. INSTALL COWL SIDE TRIM SUB-ASSEMBLY

10. INSTALL FRONT DOOR SCUFF PLATE

11. INSTALL FRONT BRAKE TUBE NO.5

(a) Using SST, install front brake tube No.5.
SST 09023-00101
Torque: 15 N*m (155 kgf*cm, 11 ft.*lbf)

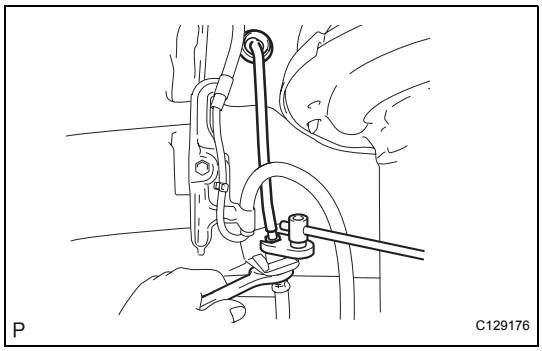

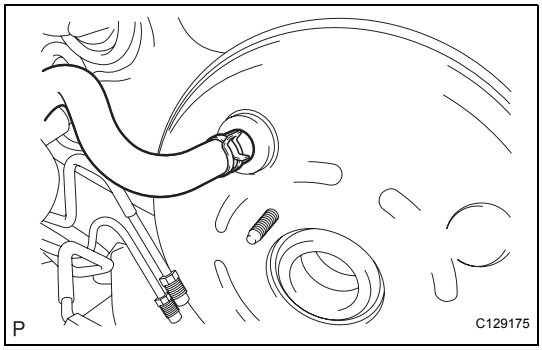

12. CONNECT VACUUM HOSE ASSEMBLY

(a) Connect the vacuum hose to the brake booster assembly and install the clip.

13. INSPECT AND ADJUST BRAKE BOOSTER PUSH ROD
SST 09737-00020

14. INSTALL BRAKE MASTER WITH PLATE CYLINDER SUB-ASSEMBLY
SST 09023-00101

15. **FILL RESERVOIR WITH BRAKE FLUID (See page BR-3)**
16. **BLEED MASTER CYLINDER (See page BR-3)**
17. **BLEED BRAKE LINE (See page BR-3)**
18. **INSTALL AIR CLEANER ASSEMBLY**
19. **CHECK FLUID LEVEL IN RESERVOIR (See page BR-6)**
20. **CHECK BRAKE FLUID LEAKAGE**
21. **INSTALL COWL TOP PANEL OUTER**
    (a) Install the cowl top panel outer with the 4 bolts and nut.
    Torque: Nut
    80 N*m (816 kgf*cm, 59 ft.*lbf)
22. **INSTALL WINDSHIELD WIPER MOTOR AND LINK ASSEMBLY (See page WW-40)**
23. **INSTALL WINDSHIELD WIPER ARM AND BLADE ASSEMBLY RH (See page WW-40)**
24. **INSTALL WINDSHIELD WIPER ARM AND BLADE ASSEMBLY LH (See page WW-41)**
25. **CHECK AND ADJUST BRAKE PEDAL HEIGHT (See page BR-10)**

FRONT BRAKE

COMPONENTS

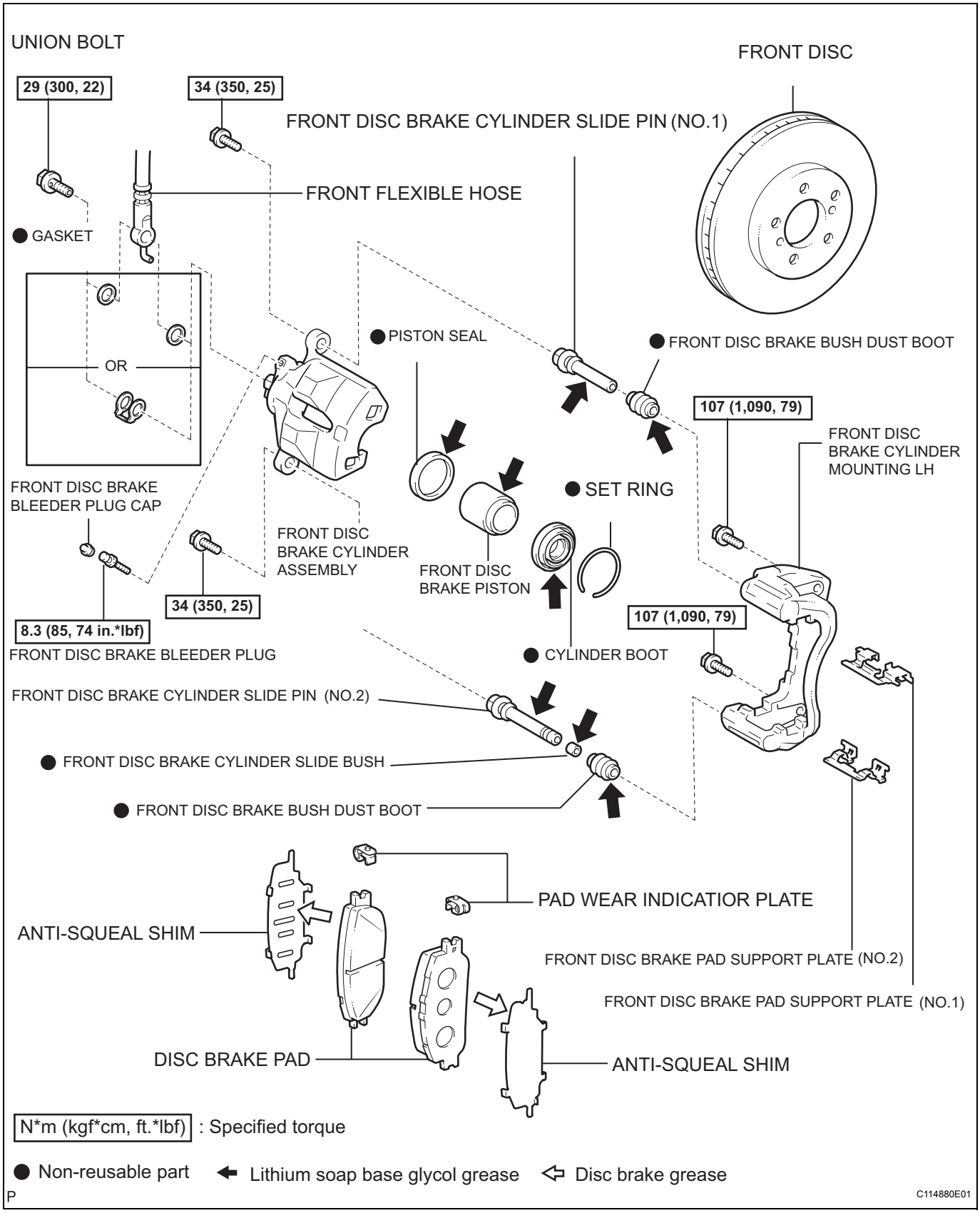

BR

REMOVAL

1. **REMOVE FRONT WHEEL**

2. **DRAIN BRAKE FLUID**
   NOTICE:
   Wash brake fluid off immediately if it adheres to any painted surface.

3. **DISCONNECT FRONT FLEXIBLE HOSE**
   (a) Remove the union bolt and the gasket(s) from the disc brake cylinder assembly, then disconnect the flexible hose.

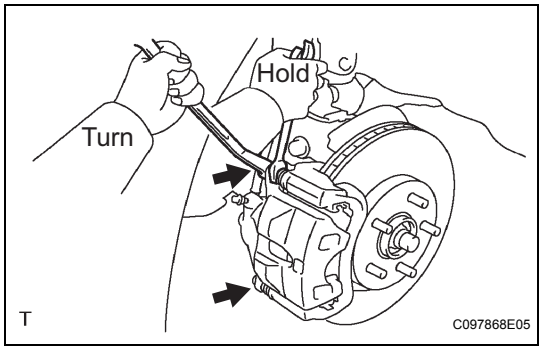

4. **REMOVE DISC BRAKE CYLINDER ASSEMBLY LH**
   (a) Hold the cylinder slide pin (No.1) and cylinder side pin (No.2), and remove the 2 bolts.
   (b) Remove the disc brake cylinder assembly.

5. **REMOVE DISC BRAKE PAD KIT FRONT (PAD ONLY)**
   (a) Remove the 2 disc brake pads with anti-squeal shims from the cylinder mounting LH.

6. **REMOVE ANTI SQUEAL SHIM KIT FRONT**
   (a) Remove the 2 anti-squeal shims from the pads.
   (b) Using a screwdriver, remove the 2 pad wear indicator plates from the pads.

7. **REMOVE FRONT DISC BRAKE PAD SUPPORT PLATE**
   (a) Remove the pad support plate (No.1) from the cylinder mounting LH.

8. **REMOVE FRONT DISC BRAKE PAD SUPPORT PLATE**
   (a) Remove the pad support plate (No.2) from the cylinder mounting LH.

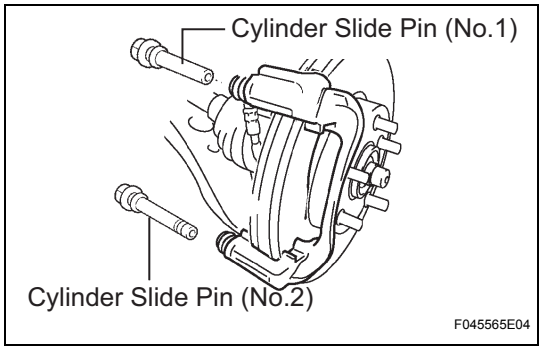

9. **REMOVE FRONT DISC BRAKE CYLINDER SLIDE PIN**
   (a) Remove the cylinder slide pin (No.1) and cylinder slide pin (No.2) from the cylinder mounting LH.

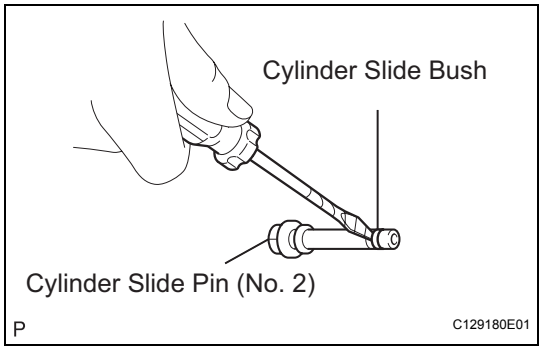

10. **REMOVE FRONT DISC BRAKE CYLINDER SLIDE BUSH**
    (a) Using a screwdriver, remove the cylinder slide bush from the cylinder slide pin (No.2).
    NOTICE:
    Do not damage the cylinder slide pin (No.2).
    HINT:
    Tape the screwdriver tip before use.

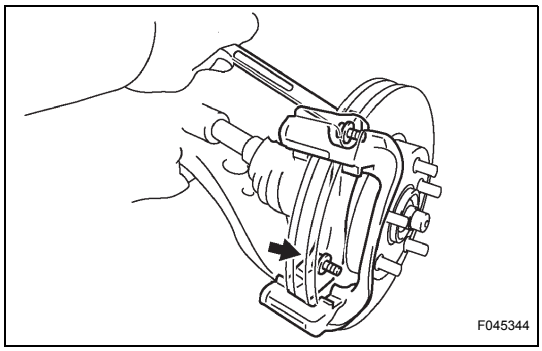

11. REMOVE FRONT DISC BRAKE CYLINDER MOUNTING LH

(a) Remove the 2 bolts and cylinder mounting LH.

DISASSEMBLY

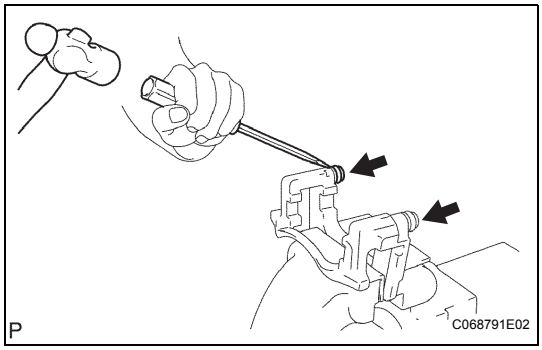

1. REMOVE FRONT DISC BRAKE BUSH DUST BOOT

(a) Hold the cylinder mounting LH in a vise between aluminum plates.

(b) Using a screwdriver and hammer, remove the 2 bush dust boots from the cylinder mounting LH.
NOTICE:
Do not damage the cylinder mounting LH.

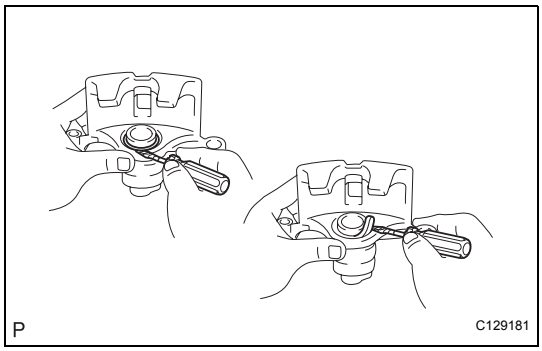

2. REMOVE CYLINDER BOOT

(a) Using a screwdriver, remove the set ring and cylinder boot.
NOTICE:
Do not damage the piston groove or cylinder groove.
HINT:
Tape the screwdriver tip before use.

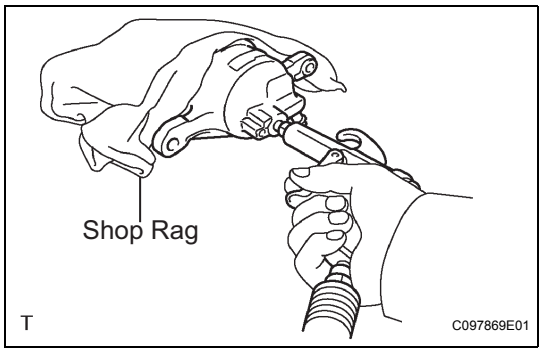

3. REMOVE FRONT DISC BRAKE PISTON

(a) Place a shop rag or a piece of cloth between the disc brake piston and the disc brake cylinder assembly.

(b) Use compressed air to remove the disc brake piston from the disc brake cylinder assembly.
CAUTION:
Do not place your fingers in front of the piston when using compressed air.
NOTICE:
Do not spatter the brake fluid.

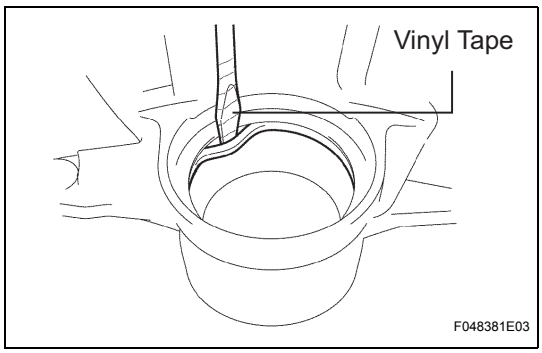

4. REMOVE PISTON SEAL

(a) Using a screwdriver, remove the piston seal from the disc brake cylinder assembly.
NOTICE:
Do not damage the inner cylinder or cylinder groove.
HINT:
Tape the screwdriver tip before use.

5. REMOVE FRONT DISC BRAKE BLEEDER PLUG

6. REMOVE FRONT DISC BRAKE BLEEDER PLUG CAP

INSPECTION

1. INSPECT BRAKE CYLINDER AND PISTON

(a) Check the brake cylinder bore and disc brake piston for rust or scoring.
If necessary, replace the disc brake cylinder assembly and disc brake piston.

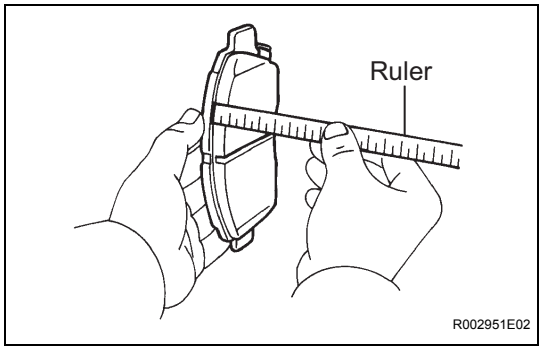

2. INSPECT DISC BRAKE PAD KIT FRONT (PAD ONLY)

(a) Using a ruler, measure the pad lining thickness.
Standard thickness:
12.0 mm (0.472 in.)
Minimum thickness:
1.0 mm (0.039 in.)
If the pad lining thickness is equal to or less than the minimum thickness, replace the brake pad.

3. INSPECT FRONT DISC BRAKE PAD SUPPORT PLATE

(a) Inspect the pad support plate (No. 1).
HINT:
Make sure that both plates have sufficient rebound and have no deformation, cracks or wear, and that all rust and dirt is cleaned off.
If necessary, replace the brake pad support plates.

4. INSPECT FRONT DISC BRAKE PAD SUPPORT PLATE

(a) Inspect the pad support plate (No. 2).
HINT:
Make sure that both plates have sufficient rebound and have no deformation, cracks or wear, and that all rust and dirt is cleaned off.
If necessary, replace the brake pad support plates.

5. INSPECT BRAKE DISC

(a) Using a micrometer, measure the disc thickness.
Standard thickness:
28.0 mm (1.102 in.)
Minimum thickness:
26.0 mm (1.024 in.)
If the disc thickness is less than the minimum, replace the disc.

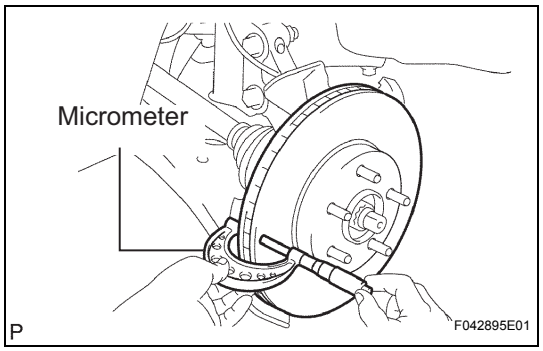

6. REMOVE FRONT DISC

(a) Put matchmarks on the front disc and the axle hub.
(b) Remove the front disc.

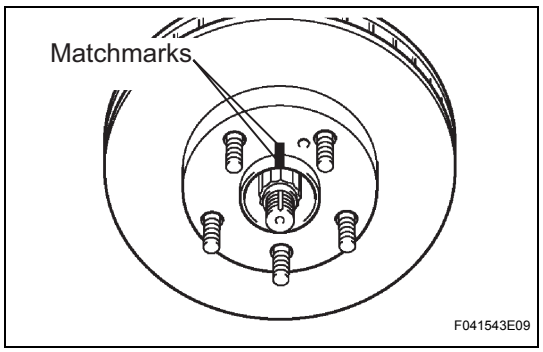

7. INSTALL FRONT DISC

(a) Aligning the matchmarks, install the front disc.
HINT:
When replacing the disc with a new one, select the installation position where the front disc has the minimum runout.

BR

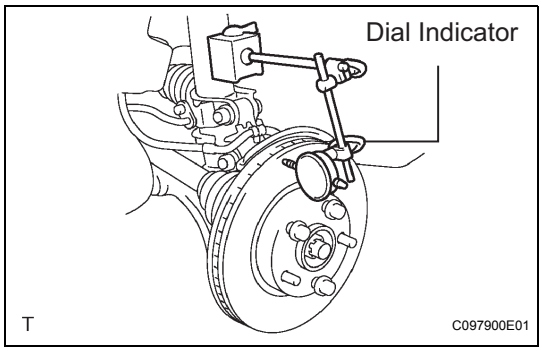

8. INSPECT DISC RUNOUT

(a) Check the bearing play in the axial direction and check for axle hub runout (See page AH-6).

(b) Temporarily fasten the front disc together with the hub nuts.
Torque: 103 N*m (1,050 kgf*cm, 76 ft.*lbf)

(c) Using a dial indicator, measure the disc runout 10 mm (0.39 in.) from the outer edge of the front disc.
Maximum disc runout:
0.05 mm (0.0020 in.)
If the runout exceeds the maximum value, change the installation positions of the disc and axle so that the runout will become minimal. If the runout exceeds the maximum even when the installation positions are changed, grind the disc. If the disc thickness is less than the minimum, replace the front disc.

REASSEMBLY

1. INSTALL FRONT DISC BRAKE BLEEDER PLUG

2. INSTALL FRONT DISC BRAKE BLEEDER PLUG CAP

3. INSTALL PISTON SEAL

(a) Apply lithium soap base glycol grease to a new piston seal.

(b) Install the piston seal to the disc brake cylinder assembly.

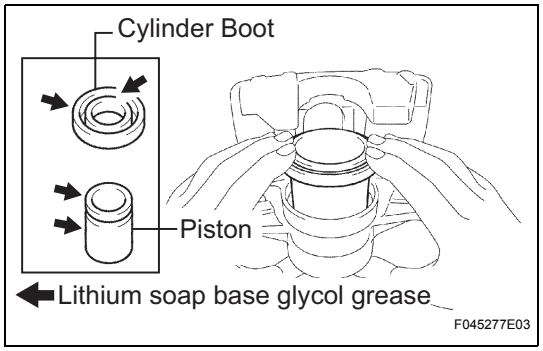

4. INSTALL FRONT DISC BRAKE PISTON

(a) Apply lithium soap base glycol grease to the disc brake piston and new cylinder boot.

(b) Install the cylinder boot to the disc brake piston.

(c) Install the disc brake piston to the disc brake cylinder assembly.

NOTICE:

Do not install the piston forcibly in the disc brake cylinder assembly.

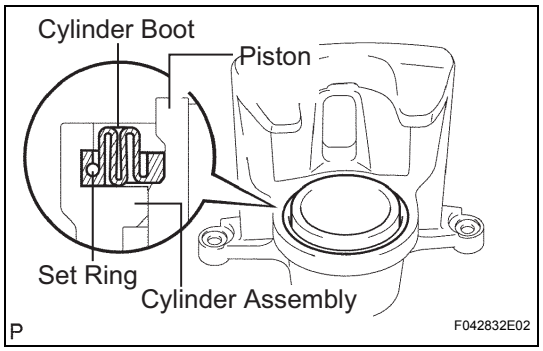

5. INSTALL CYLINDER BOOT

(a) Install the cylinder boot to the disc brake cylinder assembly.

NOTICE:

Install the cylinder boot securely into the grooves of the cylinder and piston.

(b) Using a screwdriver, install the set ring.

NOTICE:

- **Install the set ring securely into the grooves of the cylinder boot.**
- **Do not damage the cylinder boot.**

HINT:

Tape the screwdriver tip before use.

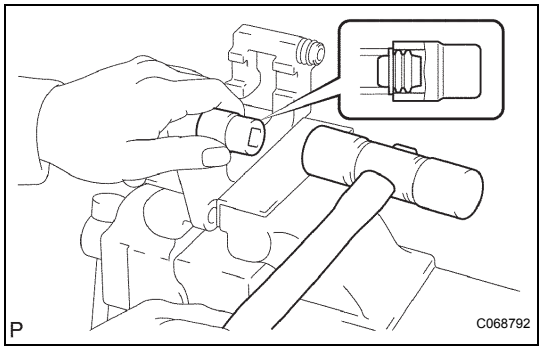

6. INSTALL FRONT DISC BRAKE BUSH DUST BOOT

(a) Secure the cylinder mounting LH in a vise.

(b) Apply lithium soap base glycol grease to the sealing surface of 2 new bush dust boots.

(c) Using a socket wrench (19 mm) and hammer, install the 2 bush dust boots to the cylinder mounting LH.

7. INSTALL FRONT DISC BRAKE CYLINDER SLIDE BUSH

(a) Apply lithium soap base glycol grease to a new cylinder slide bush.

(b) Install the cylinder slide bush to the cylinder slide pin (No.2).

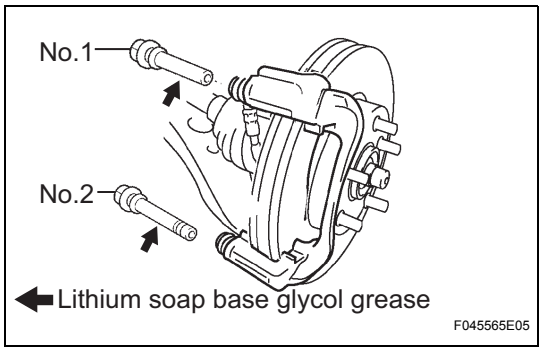

INSTALLATION

1. INSTALL FRONT DISC BRAKE CYLINDER SLIDE PIN

(a) Apply lithium soap base glycol grease to the sliding part and the sealing surface of the cylinder slide pin (No.1) and cylinder slide pin (No.2).

(b) Install the cylinder slide pin (No.1) and cylinder slide pin (No.2) to the cylinder mounting LH.

(c) Install the cylinder slide pin (No.2) to the cylinder mounting LH.

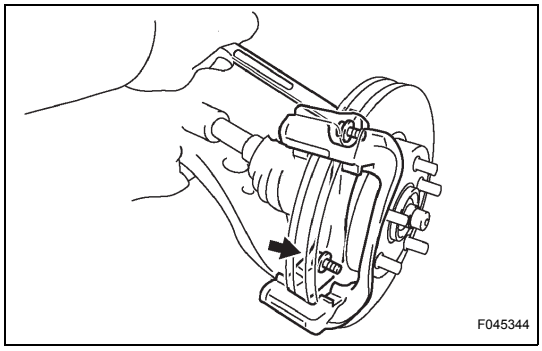

2. INSTALL FRONT DISC BRAKE CYLINDER MOUNTING LH

(a) Install the cylinder mounting with the 2 bolts.
Torque: 107 N*m (1,090 kgf*cm, 79 ft.*lbf)

3. INSTALL FRONT DISC BRAKE PAD SUPPORT PLATE

(a) Install the pad support plate (No.1) to the cylinder mounting LH.

4. INSTALL FRONT DISC BRAKE PAD SUPPORT PLATE

(a) Install the pad support plate (No.2) to the cylinder mounting LH.

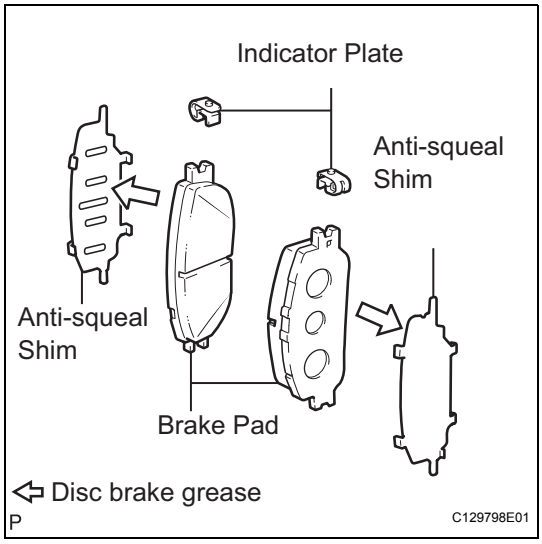

5. INSTALL ANTI SQUEAL SHIM KIT FRONT

(a) Apply disc brake grease to the anti-squeal shims and install them to each pad.
NOTICE:
- **When replacing worn pads, replace the anti-squeal shims together with the pads.**
- **Install the shims in the correct positions and directions.**

(b) Install the 2 pad wear indicator plates to the pads.

6. INSTALL DISC BRAKE PAD KIT FRONT (PAD ONLY)

(a) Install the disc brake pads with anti-squeal shims to the cylinder mounting LH.
NOTICE:
- **There should be no oil or grease on the friction surface of the pads and the disc.**
- **Install the brake pads with indicator plates facing upward.**

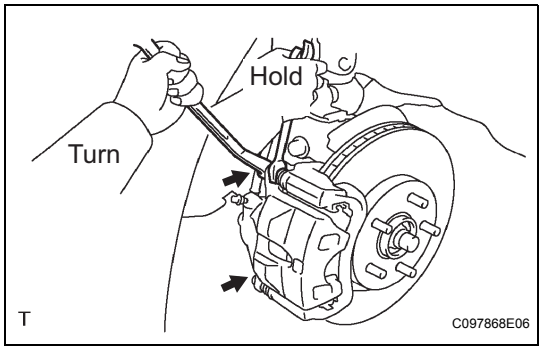

7. INSTALL BRAKE CYLINDER ASSEMBLY LH

(a) Install the disc brake cylinder assembly with the 2 bolts.
Torque: 34 N*m (350 kgf*cm, 25 ft.*lbf)

8. INSTALL FRONT FLEXIBLE HOSE

(a) Connect the flexible hose with the union bolt and new gasket(s).
Torque: 29 N*m (300 kgf*cm, 22 ft.*lbf)
NOTICE:
Install the flexible hose lock securely in the lock hole in the disc brake cylinder assembly.

9. FILL RESERVOIR WITH BRAKE FLUID (See page BR-3)
10. BLEED BRAKE LINE (See page BR-3)
11. CHECK FLUID LEVEL IN RESERVOIR (See page BR-6)
12. CHECK BRAKE FLUID LEAKAGE
13. INSTALL FRONT WHEEL
    Torque: 103 N*m (1,050 kgf*cm, 76 ft.*lbf)

REAR BRAKE

COMPONENTS

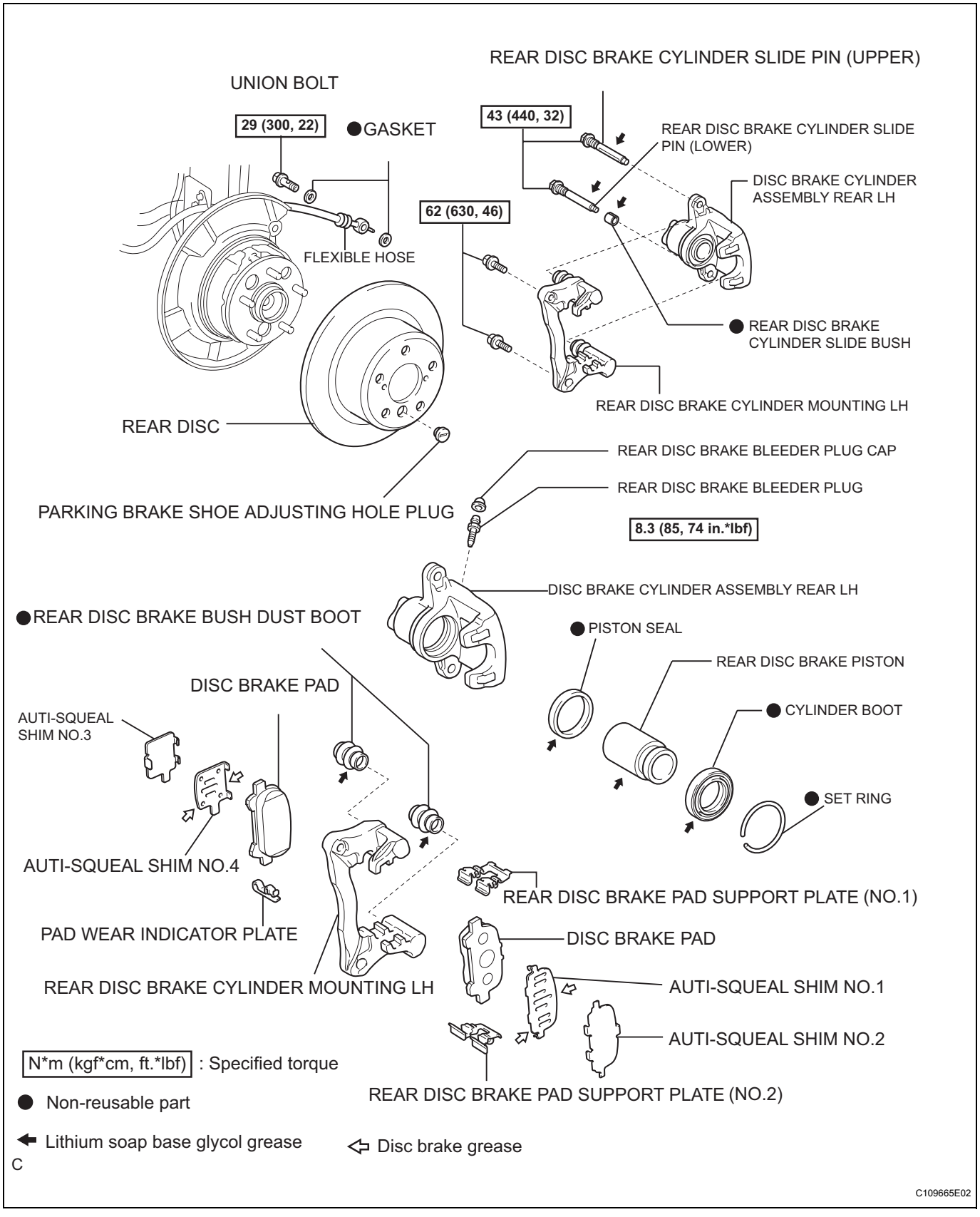

BR

REMOVAL

1. **REMOVE REAR WHEEL**

2. **DRAIN BRAKE FLUID**
   NOTICE:
   Wash brake fluid off immediately if it adheres to any painted surface.

3. **DISCONNECT FLEXIBLE HOSE**
   (a) Remove the union bolt and 2 gaskets from the disc brake cylinder assembly rear, then disconnect the flexible hose.

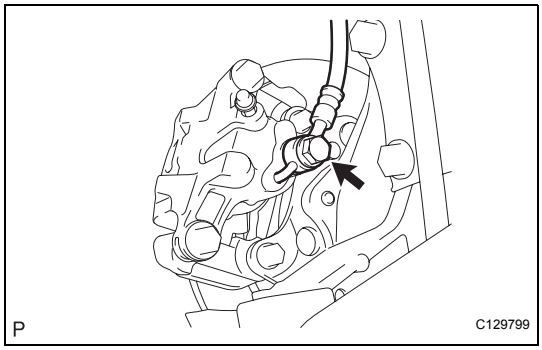

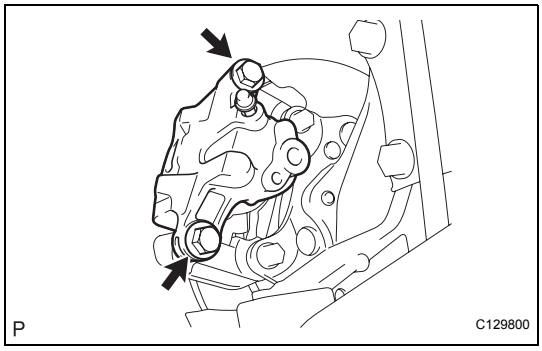

4. **REMOVE DISC BRAKE CYLINDER ASSEMBLY REAR LH**
   (a) Remove the 2 cylinder slide pins and disc brake cylinder assembly rear.

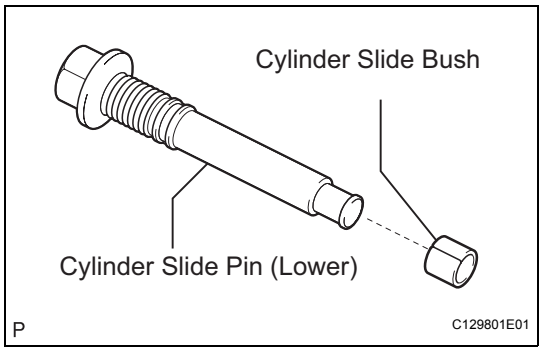

5. **REMOVE REAR DISC BRAKE CYLINDER SLIDE BUSH**
   (a) Using a screwdriver, remove the cylinder slide bush from the cylinder slide pin (lower).
   HINT:
   Tape the screwdriver tip before use.

6. **REMOVE DISC BRAKE PAD KIT REAR (PAD ONLY)**
   (a) Remove the 2 brake pads with the anti-squeal shims.

7. **REMOVE ANTI SQUEAL SHIM KIT REAR**
   (a) Remove the 2 anti-squeal shims from each of the 2 brake pads.
   (b) Remove the pad wear indicator plate from the inner pad.

8. **REMOVE REAR DISC BRAKE PAD SUPPORT PLATE**
   (a) Remove the pad support plate (No.1) from the cylinder mounting LH.

9. **REMOVE REAR DISC BRAKE PAD SUPPORT PLATE**
   (a) Remove the pad support plate (No.2) from the cylinder mounting LH.

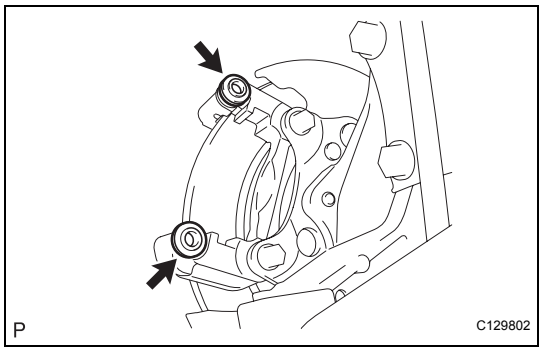

10. REMOVE REAR DISC BRAKE BUSH DUST BOOT

(a) Remove the 2 bush dust boots from the cylinder mounting LH.

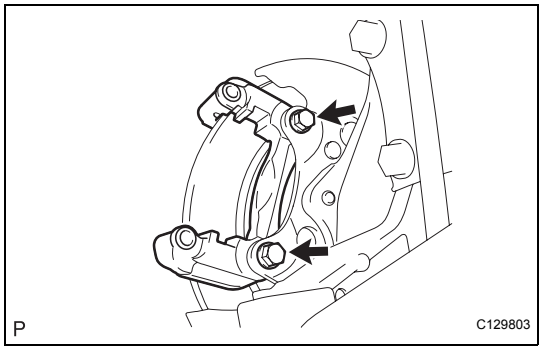

11. REMOVE REAR DISC BRAKE CYLINDER MOUNTING LH

(a) Remove the 2 bolts and cylinder mounting LH.

DISASSEMBLY

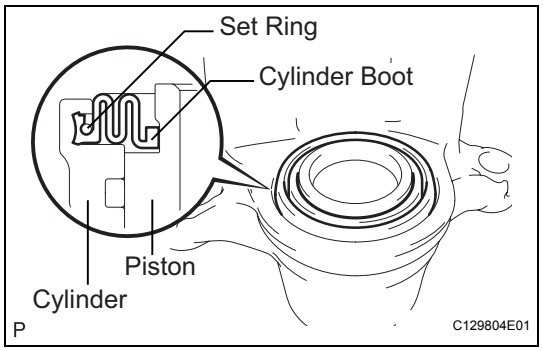

1. REMOVE CYLINDER BOOT

(a) Using a screwdriver, remove the set ring and cylinder boot.
NOTICE:
Do not damage the piston groove and cylinder groove.
HINT:
Tape the screwdriver tip before use.

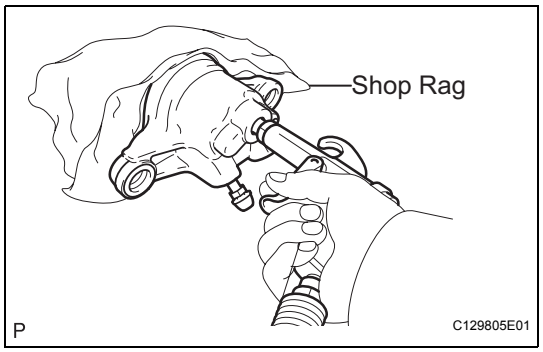

2. REMOVE REAR DISC BRAKE PISTON

(a) Place a shop rag or a piece of cloth between the piston and the disc brake cylinder.
(b) Use compressed air to remove the piston from the disc brake cylinder.
CAUTION:
Do not place your fingers in front of the piston when using compressed air.
NOTICE:
Do not spatter the brake fluid.

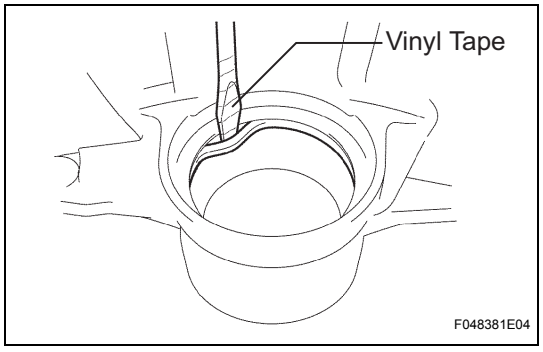

3. REMOVE PISTON SEAL

(a) Using a screwdriver, remove the piston seal from the brake cylinder.
NOTICE:
Do not damage the inner cylinder and the cylinder groove.
HINT:
Tape the screwdriver tip before use.

4. REMOVE REAR DISC BRAKE BLEEDER PLUG CAP

5. REMOVE REAR DISC BRAKE BLEEDER PLUG

INSPECTION

1. INSPECT BRAKE CYLINDER AND PISTON

(a) Check the cylinder bore and piston for rust or scoring.
If necessary, replace the brake cylinder assembly rear and piston.

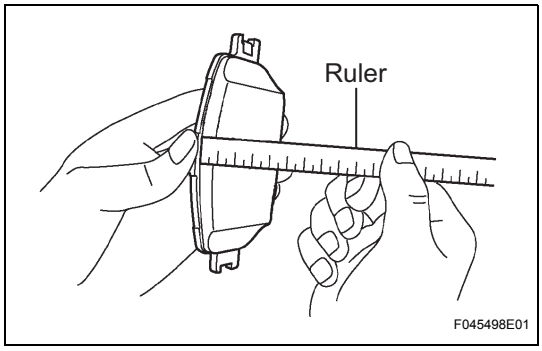

2. INSPECT DISC BRAKE PAD KIT REAR (PAD ONLY)

(a) Using a ruler, measure the pad lining thickness.
Standard thickness:
10.0 mm (0.394 in.)
Minimum thickness:
1.0 mm (0.039 in.)
If the pad lining thickness is equal to or less than the minimum thickness, replace the brake pad.

3. INSPECT REAR DISC BRAKE PAD SUPPORT PLATE

(a) Make sure that the pad support plates have sufficient rebound and have no deformation, cracks or wear, and that all rust and dirt is cleaned off.
If necessary, replace the brake pad support plates.

4. INSPECT REAR DISC BRAKE PAD SUPPORT PLATE

(a) Make sure that the pad support plates have sufficient rebound and have no deformation, cracks or wear, and that all rust and dirt is cleaned off.
If necessary, replace the brake pad support plates.

5. INSPECT BRAKE DISC

(a) Using a micrometer, measure the disc thickness.
Standard thickness:
12.0 mm (0.472 in.)
Minimum thickness:
10.5 mm (0.413 in.)
If the disc thickness is less than the minimum, replace the front disc.

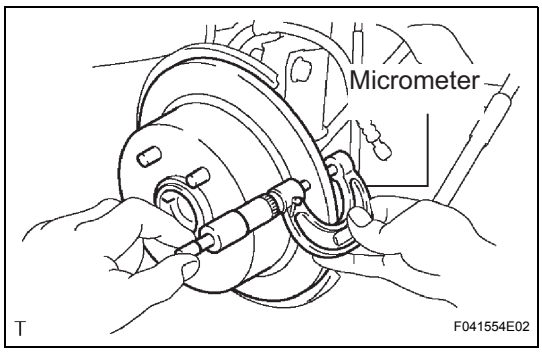

6. INSPECT DISC RUNOUT

(a) Check the bearing play in the axial direction and check for axle hub runout (See page AH-15).
(b) Temporarily fasten the rear disc with the hub nuts.
Torque: 103 N*m (1,050 kgf*cm, 76 ft.*lbf)
(c) Using a dial indicator, measure the disc runout 10 mm (0.39 in.) from the outer edge of the rear disc.
Maximum disc runout:
0.15 mm (0.0059 in.)
If the runout exceeds the maximum value, change the installation positions of the disc and axle so that the runout will become minimal. If the runout exceeds the maximum even when the installation positions are changed, grind the disc. If the disc thickness is less than the minimum, replace the rear disc.

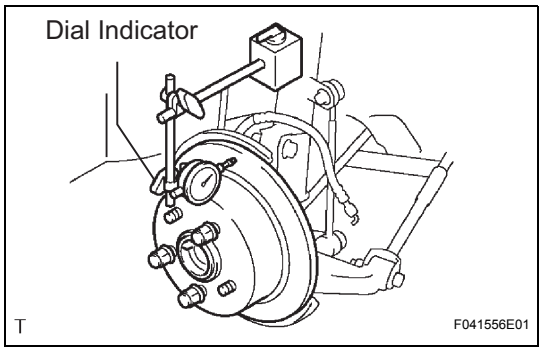

7. ADJUST PARKING BRAKE SHOE CLEARANCE

REASSEMBLY

1. INSTALL REAR DISC BRAKE BLEEDER PLUG

2. INSTALL REAR DISC BRAKE BLEEDER PLUG CAP

3. INSTALL PISTON SEAL

(a) Apply lithium soap base glycol grease to a new piston seal.

(b) Install the piston seal to the disc brake cylinder assembly rear.

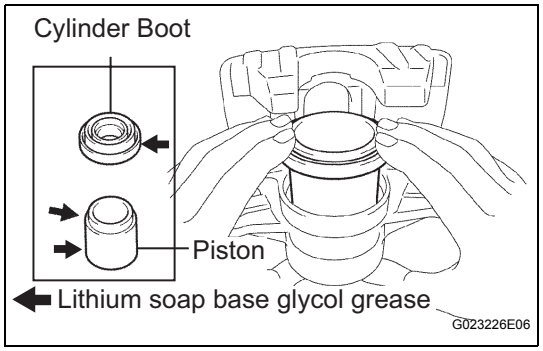

4. INSTALL REAR DISC BRAKE PISTON

(a) Apply lithium soap base glycol grease to the piston and a new cylinder boot.

(b) Install the cylinder boot to the piston.

(c) Install the piston to the disc brake cylinder assembly rear.

NOTICE:
Do not install the piston forcibly in the cylinder assembly rear.

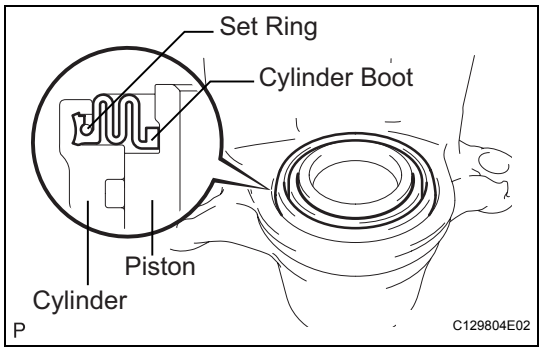

5. INSTALL CYLINDER BOOT

(a) Install the cylinder boot to the disc brake cylinder assembly rear.

NOTICE:
Install the cylinder boot securely into the grooves of the cylinder and piston.

(b) Using a screwdriver, install a new set ring.

NOTICE:
- **Install the set ring securely into the grooves of the cylinder boot.**
- **Do not damage the cylinder boot.**

HINT:
Tape the screwdriver tip before use.

INSTALLATION

1. INSTALL REAR DISC BRAKE CYLINDER MOUNTING LH

(a) Install the cylinder mounting LH with the 2 bolts.
Torque: 62 N*m (630 kgf*cm, 46 ft.*lbf)

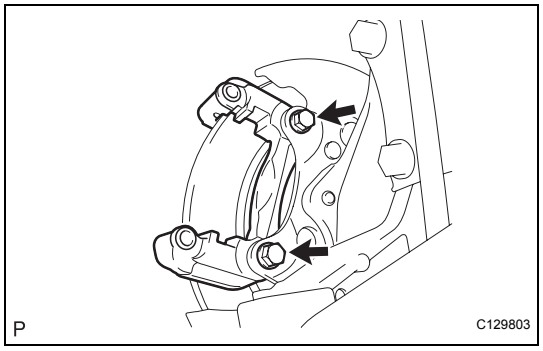

BR

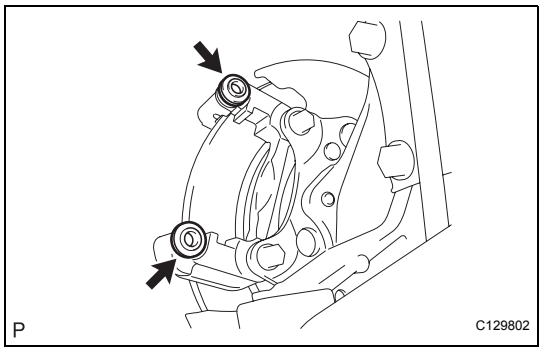

2. INSTALL REAR DISC BRAKE BUSH DUST BOOT

(a) Apply lithium soap base glycol grease to the sealing surface of 2 new bush dust boots.

(b) Install the 2 bush dust boots to the cylinder mounting LH.

3. INSTALL REAR DISC BRAKE PAD SUPPORT PLATE

(a) Install the pad support plate (No.1) to the cylinder mounting LH.

4. INSTALL REAR DISC BRAKE PAD SUPPORT PLATE

(a) Install the pad support plate (No.2) to the cylinder mounting LH.

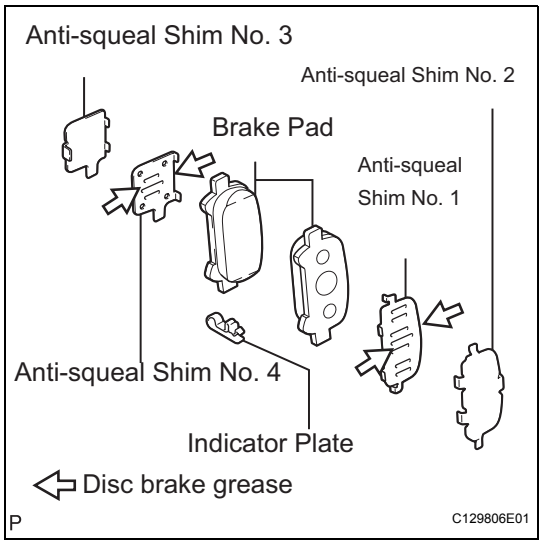

5. INSTALL ANTI SQUEAL SHIM KIT REAR

(a) Apply disc brake grease to anti-squeal shim No.1 and No.4 and install them to each pad.
NOTICE:
- **When replacing worn pads, replace the anti-squeal shims together with the pads.**
- **Install the anti-squeal shims in the correct positions and directions.**

(b) Install anti-squeal shim No.2 and No.3 to each pad.
NOTICE:
Install the anti-squeal shims in the correct positions and directions.

(c) Install the pad wear indicator plate to the inner pad.
NOTICE:
Install the pad wear indicator plate in the correct position and direction.

6. INSTALL DISC BRAKE PAD KIT REAR (PAD ONLY)

(a) Install the 2 brake pads with the anti-squeal shims.
NOTICE:
- **There should be no oil or grease on the friction surface of the pads and the disc.**
- **Install the inner pad with indicator plate facing downward.**

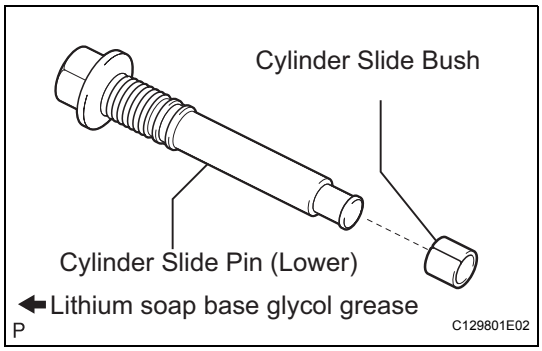

7. INSTALL REAR DISC BRAKE CYLINDER SLIDE BUSH

(a) Apply lithium soap base glycol grease to a new cylinder slide bush.

(b) Install the cylinder slide bush to the cylinder slide pin (lower).

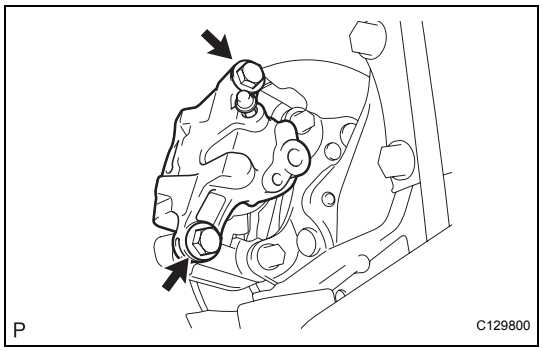

8. **INSTALL DISC BRAKE CYLINDER ASSEMBLY REAR LH**
   (a) Apply lithium soap base glycol grease to the sliding part and the seal surfaces of the cylinder slide pins.
   (b) Install the disc brake cylinder assembly rear with the 2 cylinder slide pins.
   Torque: 43 N*m (440 kgf*cm, 32 ft.*lbf)

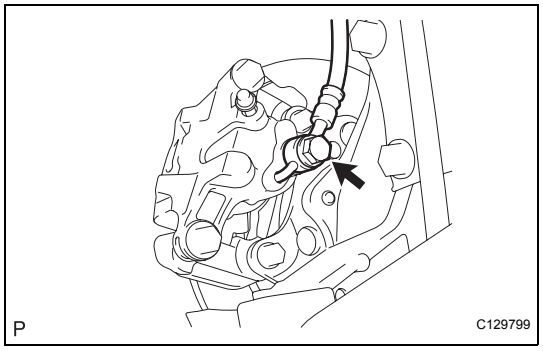

9. **CONNECT FLEXIBLE HOSE**
   (a) Connect the flexible hose with the union bolt and 2 new gaskets.
   Torque: 29 N*m (300 kgf*cm, 22 ft.*lbf)
   NOTICE:
   Install the flexible hose lock securely in the lock hole in the disc brake cylinder assembly rear.
10. **FILL RESERVOIR WITH BRAKE FLUID (See page BR-3)**
11. **BLEED BRAKE LINE (See page BR-3)**
12. **CHECK FLUID LEVEL IN RESERVOIR (See page BR-6)**
13. **CHECK BRAKE FLUID LEAKAGE**
14. **INSTALL REAR WHEEL**
    Torque: 103 N*m (1,050 kgf*cm, 76 ft.*lbf)

ANTI-LOCK BRAKE SYSTEM

PRECAUTION

NOTICE:
When disconnecting the negative (-) battery terminal, initialize the following system(s) after the terminal is reconnected.

System Name	See procedure
Power Window Control System	IN-29
Sliding Roof System	

1. TROUBLESHOOTING PRECAUTION

NOTICE:

- **When there is a malfunction in the contact point of the terminals or installation problems with parts, removal and installation of the suspected problem parts may return the system to the normal condition either completely or temporarily.**
- **In order to determine the malfunctioning area, be sure to check the conditions at the time the malfunction occurred, such as by DTC output and freeze frame data output, and record it before disconnecting each connector or removing and installing parts.**
- **Since the ABS with EBD systems may be influenced by a malfunction in the other systems, be sure to check for DTCs in the other systems.**
- **Be sure to remove and install the brake actuator and each sensor with the ignition switch off unless specified in the inspection procedure.**
- **When removing and installing the brake actuator and each sensor, be sure to check that the normal display is output in the test mode inspection and in DTC output inspection after installing all parts.**
- **The CAN communication system is used for data communication between the skid control ECU and the gateway ECU. If there is trouble in the CAN communication line, the DTC of the communication line is output.**
- **If the DTC of the CAN communication line is output, repair the malfunction in the communication line and troubleshoot the ABS with EBD system.**
- **Since the CAN communication line has its own length and route, it cannot be repaired temporarily with the bypass wire, etc.**

2. EXPRESSIONS OF IGNITION SWITCH

The type of ignition switch used on this model differs according to the specifications of the vehicle.
The expressions listed in the table below are used in this section.

Switch Type		Ignition Switch (position)	Engine Switch (condition)
Expression	Ignition Switch off	LOCK	Off
	Ignition Switch on (IG)	ON	On (IG)
	Ignition Switch on (ACC)	ACC	On (ACC)
	Engine Start	START	Start

PARTS LOCATION

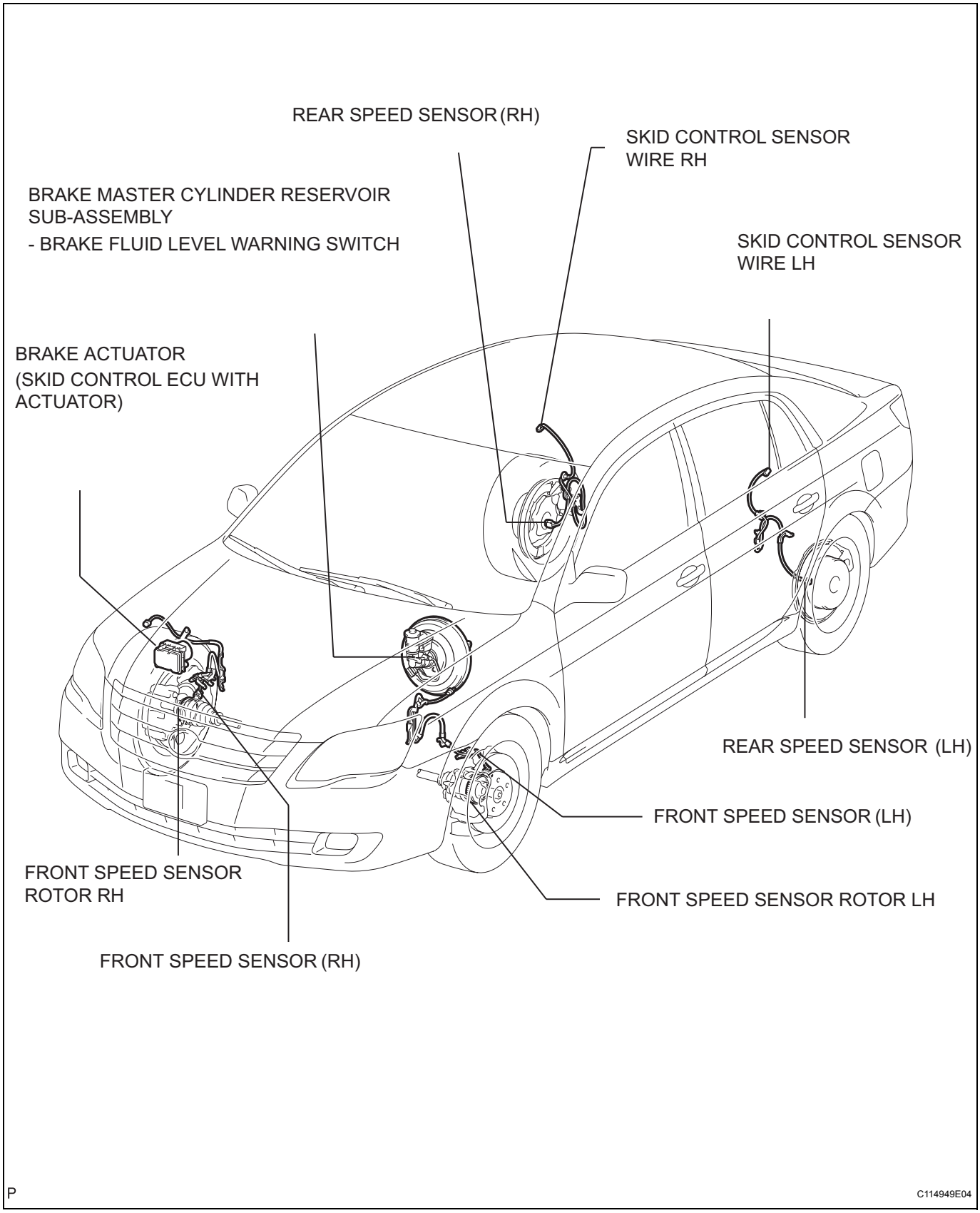

BC

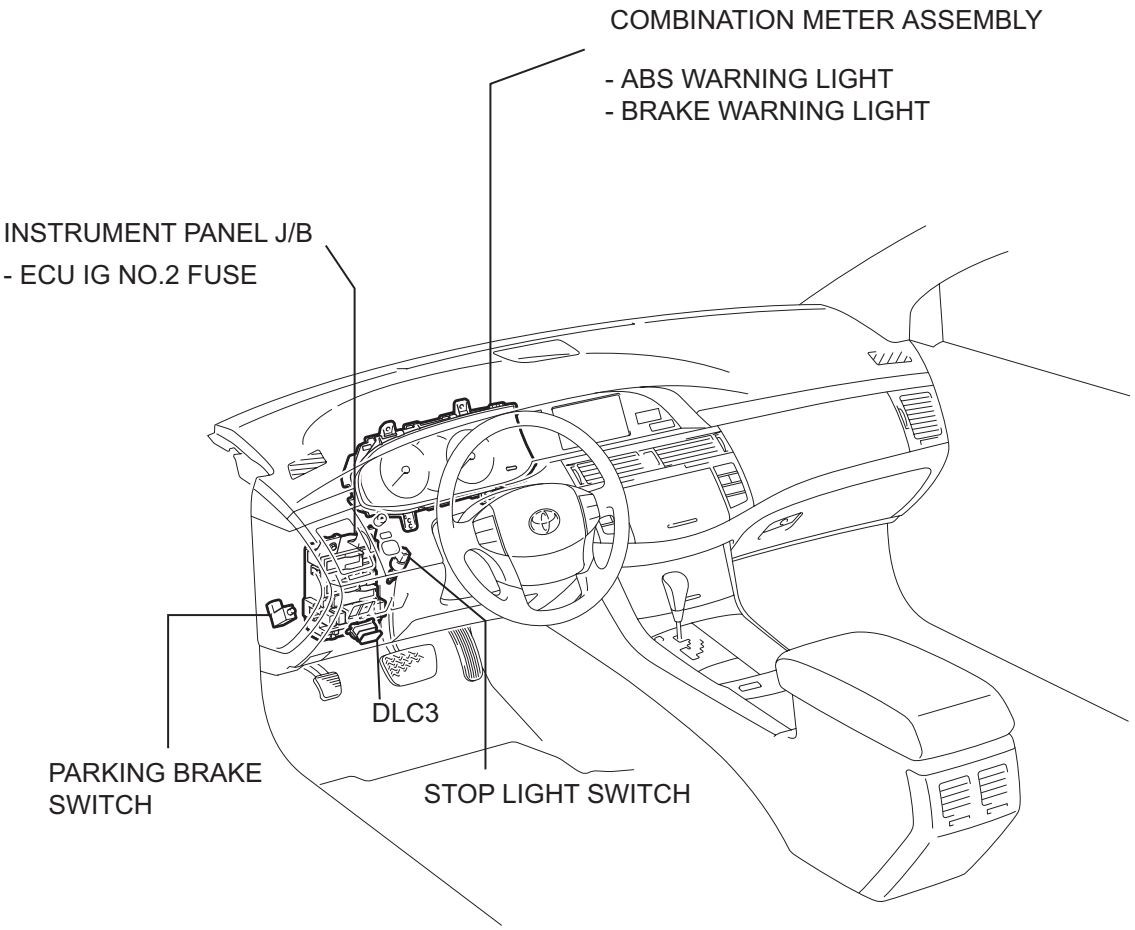

P

C114881E04

SYSTEM DIAGRAM

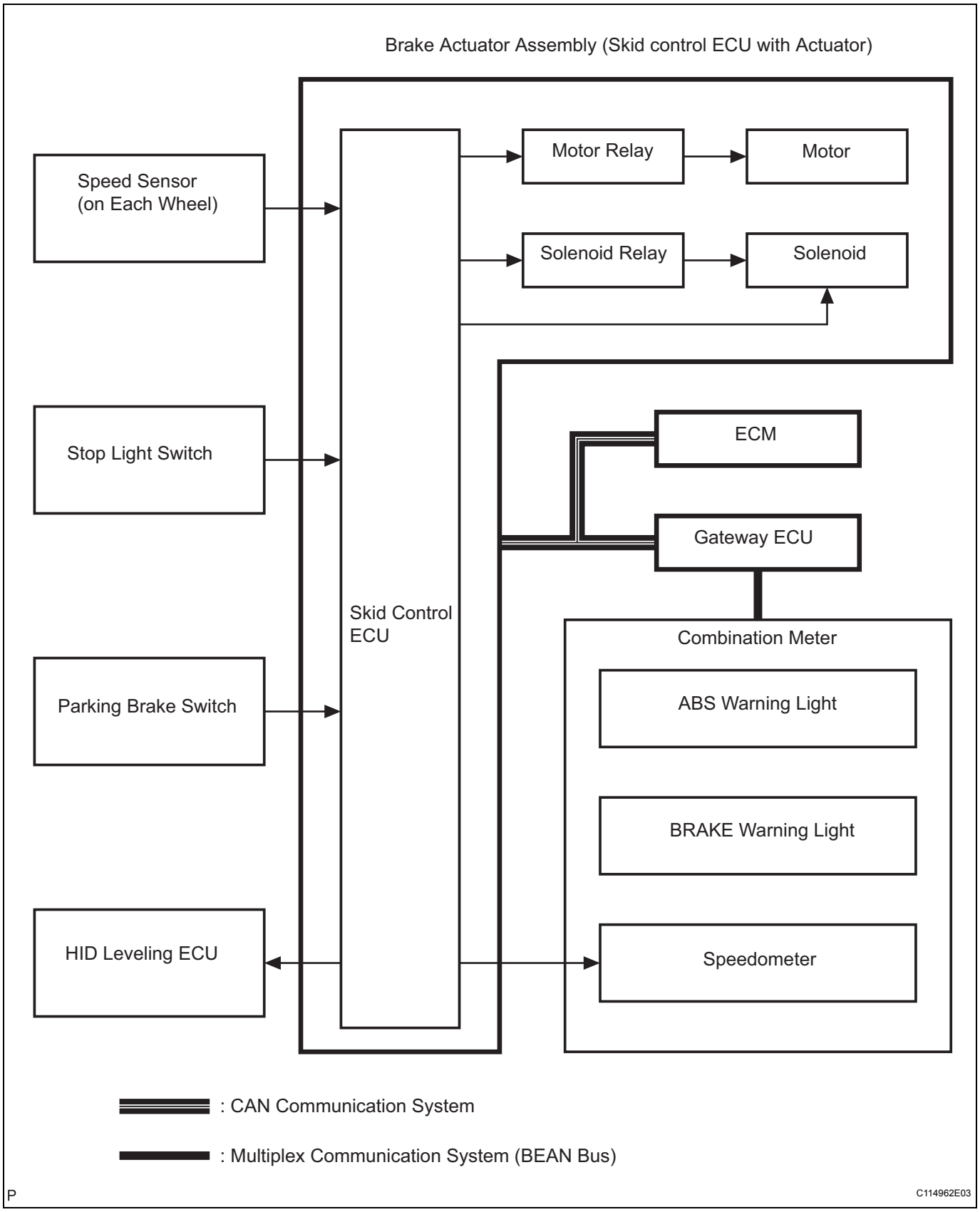

BC

Transmitting ECU	Receiving ECU	Signals	Communication method
Skid control ECU	Combination meter	• ABS warning light signal • BRAKE warning light signal	• CAN communication system • Multiplex communication system
ECM	Skid control ECU	Shift position signal	CAN communication system

SYSTEM DESCRIPTION

1. SYSTEM DESCRIPTION

HINT:

The skid control ECU is located within the brake actuator assembly.

(a) ABS

(Anti-lock Brake System)

The ABS helps prevent the wheels from locking when the brakes are applied firmly or when braking on a slippery surface.

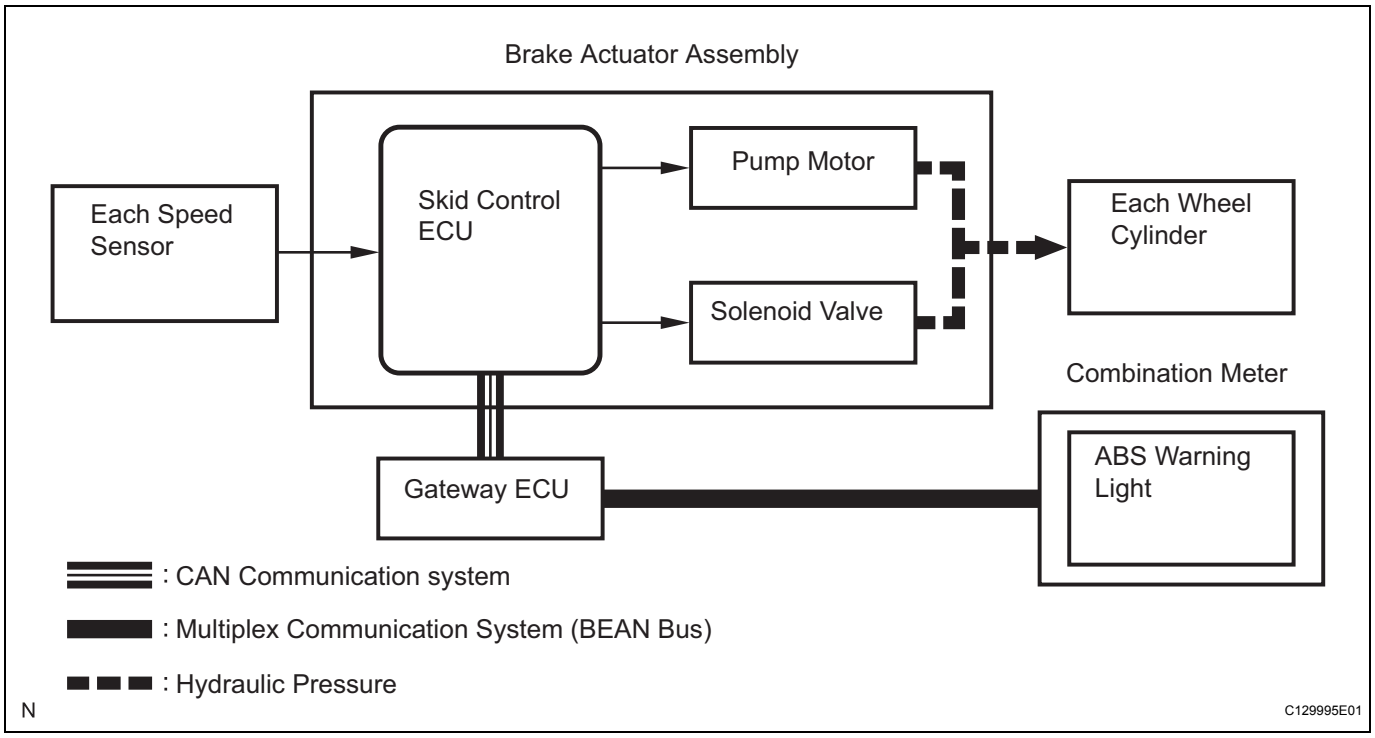

(1) Operation description

The skid control ECU detects wheel lock condition by receiving vehicle speed signals from each speed sensor, and sends control signals to the pump motor and solenoid valve. The pump motor and solenoid valve avoid wheel lock by controlling the hydraulic pressure of each wheel cylinder.

The ABS warning light comes on when the ABS system is malfunctioning.

(b) EBD
(Electronic Brake force Distribution)
The EBD control utilizes ABS, realizing proper brake force distribution between the front and rear wheels in accordance with driving conditions.
In addition, when braking while cornering, it also controls the brake forces of the right and left wheels, helping to maintain vehicle behavior.

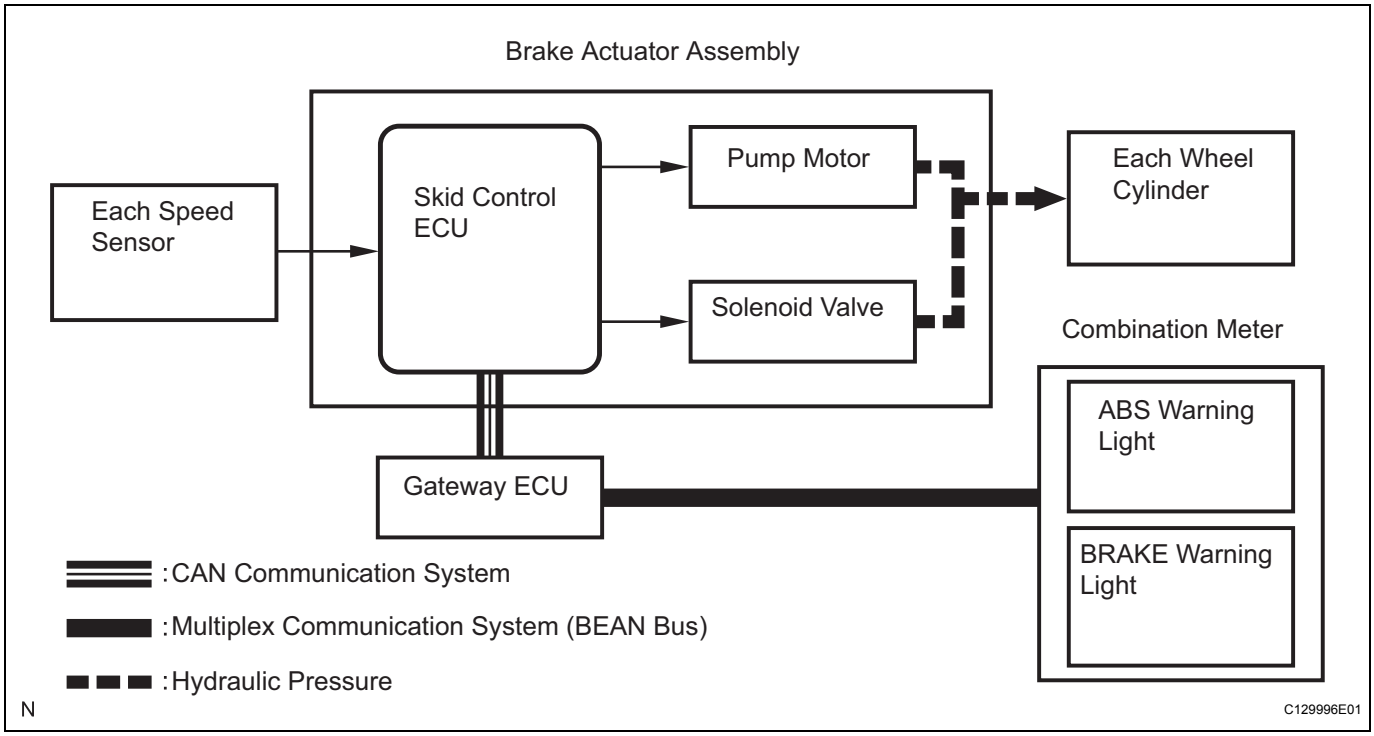

(1) Operation description
The skid control ECU receives the speed signal from each speed sensor to detect the slip condition of the wheels and sends the control signal to the solenoid.
The solenoid valve controls the hydraulic pressure of each wheel cylinder and splits the control power properly between the front and rear wheels and the right and left wheels.
Both of the ABS and BRAKE warning lights come on to indicate a malfunction in the EBD system.

BC

2. ABS with EBD OPERATION

(a) Based on the signals received from the 4 wheel speed sensors, the skid control ECU calculates the speed of each wheel and deceleration, and checks wheel slipping condition. According to the slipping condition, the skid control ECU controls the pressure holding valve and pressure reduction valve in order to adjust the fluid pressure of each wheel cylinder.

3. FAIL SAFE FUNCTION

(a) When a failure occurs in the ABS system, the ABS warning light comes on and operation is prohibited. In addition to this, when a failure which disables EBD operation occurs, the brake warning light comes on as well and operation is prohibited.

4. FUNCTION OF COMPONENTS

Components	Function
Brake actuator assembly	• Composed of the holding solenoid valve, pressure reduction solenoid valve, pump motor, reservoir, etc., and adjusts the brake fluid pressure applied to each wheel cylinder. • Houses the skid control ECU.
Skid Control ECU	Calculates brake control in accordance with sensor signals.
Speed sensor	Detects speed of each wheel and inputs the data into the skid control ECU.
Master cylinder	Generates pressure according to pedal effort.
Stop light switch	Illuminates the brake light when the brake pedal is depressed. (Sends brake on signal to the skid control ECU)
Solenoid relay	• Supplies power to each solenoid. • Housed in the skid control ECU.
Motor relay	• Supplies power to the pump motor. • Housed in the skid control ECU.
ABS warning light	• Comes on to inform the driver that a malfunction in the ABS has occurred. • Blinks to output DTC.
BRAKE warning light	• Comes on to inform the driver that the parking brake is on when the system is normal or the brake fluid has decreased. • Simultaneously comes on with the ABS warning light to inform the driver that both ABS and BED cannot operate.

HOW TO PROCEED WITH TROUBLESHOOTING

The intelligent tester can be used at step 3, 4, 6, 7, 11, 14, and 17.

1	VEHICLE BROUGHT TO WORKSHOP

NEXT

2	CUSTOMER PROBLEM ANALYSIS

HINT:
See page IN-36.

NEXT

3	CHECK DTC AND FREEZE FRAME DATA

NEXT

4	CLEAR DTC AND FREEZE FRAME DATA

NEXT

5	PROBLEM SYMPTOM CONFIRMATION

NEXT

6	CHECK CAN COMMUNICATION SYSTEM

(a) Check for output DTCs.
HINT:
The ECU of this system is connected to the CAN communication system. Therefore, before starting troubleshooting, make sure to check that there is no trouble in the CAN communication system.

BC

→	CAN COMMUNICATION SYSTEM DTC IS OUTPUT: PROCEED TO CAN COMMUNICATION SYSTEM
→	NO CAN COMMUNICATION SYSTEM DTC IS OUTPUT: GO TO STEP 7

7	CHECK MULTIPLEX COMMUNICATION SYSTEM

(a) Check for output DTCs.
HINT:
The skid control ECU sends the signals of each warning light to the gateway ECU via CAN communication, and the gateway ECU sends the signals to the combination meter via the multiplex communication system (BEAN).

→ **MULTIPLEX COMMUNICATION SYSTEM DTC IS OUTPUT: PROCEED TO MULTIPLEX COMMUNICATION SYSTEM**

→ **NO MULTIPLEX COMMUNICATION SYSTEM DTC IS OUTPUT: GO TO STEP 8**

8	DTC CHECK AND CLEAR

NEXT

9	PROBLEM SYMPTOM SIMULATION

→ **SYMPTOM DOES NOT OCCUR: GO TO STEP 10**

→ **SYMPTOM OCCURS: GO TO STEP 11**

10	SYMPTOM SIMULATION

NEXT

11	DTC CHECK (OTHER THAN CAN AND MULTIPLEX COMMUNICATION SYSTEM DTC)

→ **NORMAL SYSTEM CODE: GO TO STEP 12**

→ **TROUBLE CODE: GO TO STEP 13**

12	PROBLEM SYMPTOMS TABLE

NEXT

13	**DTC CHART**

NEXT

14	**CIRCUIT INSPECTION**

NEXT

15	**IDENTIFICATION OF PROBLEM**

NEXT

16	**REPAIR OR REPLACE**

NEXT

17	**CONFIRMATION TEST**

NEXT

END

TEST MODE PROCEDURE

1. SPEED SENSOR SIGNAL CHECK (TEST MODE) PROCEDURE (WHEN USING INTELLIGENT TESTER:)

HINT:

- If the ignition switch is turned from on (IG) to off during test mode (SIGNAL CHECK), the DTCs of the sensor check function will be erased.
- During test mode (SIGNAL CHECK), the skid control ECU records DTCs, if the abnormal sensor signal is received.

(a) Procedures for test mode:

(1) Turn the ignition switch off.

(2) Move the shift lever to the P position.

(3) Connect the intelligent tester to the DLC3.

(4) Turn the ignition switch on (IG)

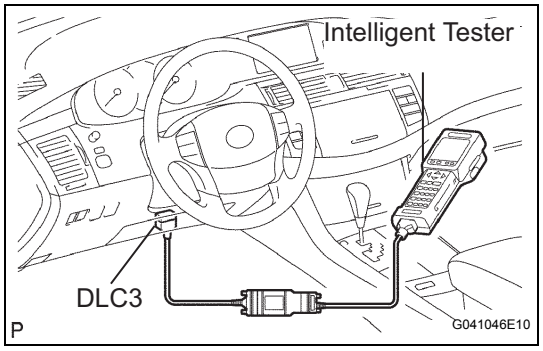

(5) Select "SIGNAL CHECK" on the intelligent tester screen.

HINT:

Refer to the intelligent tester operator's manual for further details.

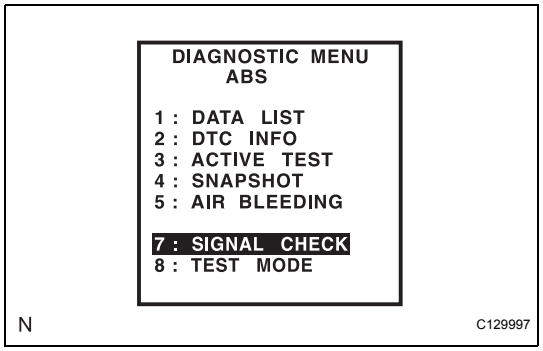

(6) Check that the ABS warning light comes on for several seconds and then blinks in test mode.

HINT:

If the ABS warning light does not blink, inspect the ABS warning light circuit.

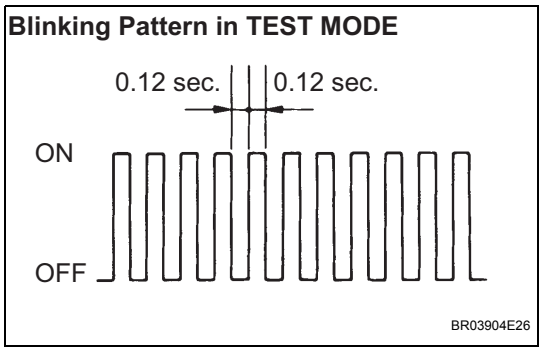

Trouble area	See procedure
ABS warning light circuit (Remains on)	BC-67
ABS warning light (Does not come on)	BC-71

(7) Start the engine.

(b) Check the speed sensor signal.

(1) Drive the vehicle straight forward.

Accelerate the vehicle to a speed of 34 mph (55 km/h) or more.

BC

(2) Depress the brake pedal and check that the ABS warning light goes off.
HINT:
- The sensor check may not be completed if the vehicle has its wheel spun or its steering wheel turned during this check.
- The ABS warning light goes off when the sensor signal check has been completed and the brake pedal is depressed.
- The ABS warning light comes on immediately after a malfunction has been detected during the speed sensor signal check.

(3) Stop the vehicle.
(4) Read the DTCs by following the tester screen.
HINT:
See the list of DTCs (See procedure "A").

2. SPEED SENSOR SIGNAL CHECK (TEST MODE) PROCEDURE (WHEN USING SST CHECK WIRE:)

HINT:
- If the ignition switch is turned from on (IG) to off during test mode, the DTCs of the sensor signal check function will be erased.
- During test mode (SIGNAL CHECK), the skid control ECU records DTCs, if the abnormal sensor is received.

(a) Procedures for test mode:
(1) Turn the ignition switch off.
(2) Move the shift lever to the P position.
(3) Using SST, connect terminals TS and CG of the DLC3.
SST 09843-18040
(4) Turn the ignition switch on (IG).

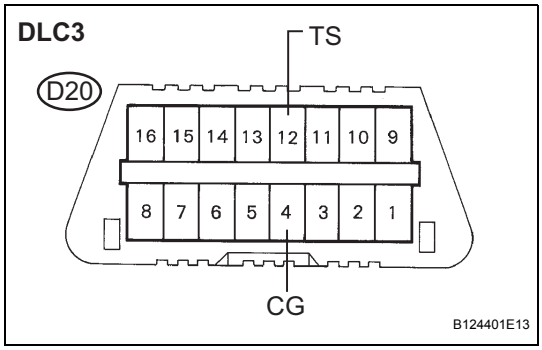

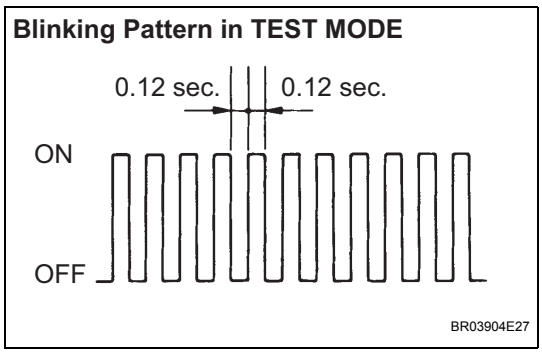

(5) Check that the ABS warning light comes on for several seconds and then blinks in test mode.
HINT:
If the ABS warning light does not blink, inspect the ABS warning light circuit and TS terminal circuit.

Trouble area	See procedure
ABS warning light circuit (Remains on)	BC-67
ABS warning light circuit (Does not come on)	BC-71
TS and CG terminal circuit	BC-86

(6) Start the engine.

BC

(b) Check the speed sensor signal:
(1) Drive the vehicle straight forward.
Accelerate the vehicle to a speed of 34 mph (55 km/h) or more.
(2) Depress the brake pedal and check that the ABS warning light goes off.
HINT:
- The sensor check may not be completed if the vehicle has its wheels spun or its steering wheel turned during this check.
- The ABS warning light goes off when the sensor signal check has been completed and the brake pedal is depressed.
- The ABS warning light comes on immediately after a malfunction has been detected during the speed sensor signal check.

(3) Stop the vehicle.

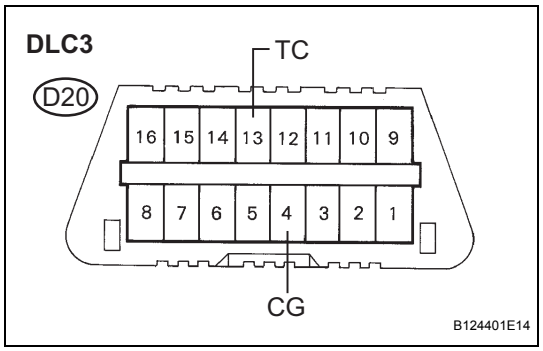

(4) Using SST, connect terminals TC and CG of the DLC3.
SST 09843-18040
(5) Read the number of blinks of the ABS warning light.

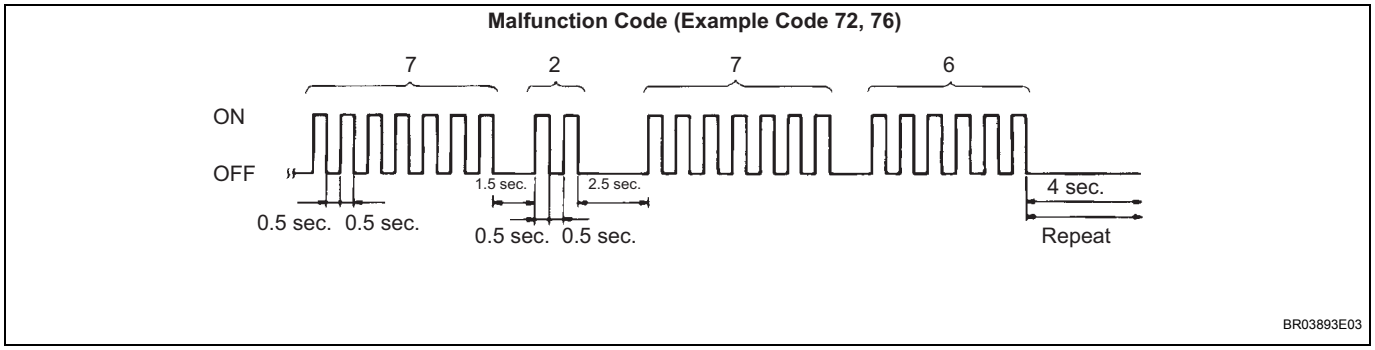

HINT:
- See the list of DTCs (See procedure "A").
- If every sensor is normal, a normal code will be output (Acycle of 0.25 second ON and 0.25 second OFF is repeated).
- If 2 or more malfunctions are indicated at the same time, the lowest numbered code will be displayed first.

(6) After performing the check, turn the ignition switch off, and remove the SST from the DLC3.
SST 09843-18040
(7) Turn the ignition switch on (IG).
HINT:
If the ignition switch is not turned to the ON position after the SST is removed from the DLC3, the previous TEST MODE will continue.

BC

3. DTC OF SIGNAL CHECK FUNCTION (test mode) (Procedure "A"):

Code No.	Diagnosis	Trouble Area
C1271/71	Low output voltage of right front speed sensor	• Front speed sensor RH • Front speed sensor circuit RH • Sensor installation • Sensor rotor • Brake actuator assembly (skid control ECU)
C1272/72	Low output voltage of left front speed sensor	• Front speed sensor LH • Front speed sensor circuit LH • Sensor installation • Sensor rotor • Brake actuator assembly (skid control ECU)
C1273/73	Low output voltage of right rear speed sensor	• Rear speed sensor RH • Rear speed sensor circuit RH • Sensor installation • Sensor rotor • Brake actuator assembly (skid control ECU)
C1274/74	Low output voltage of left rear speed sensor	• Rear speed sensor LH • Rear speed sensor circuit LH • Sensor installation • Sensor rotor • Brake actuator assembly (skid control ECU)
C1275/75	Abnormal change in output voltage of right front speed sensor	• Front speed sensor RH • Front speed sensor circuit RH • Sensor installation • Sensor rotor • Brake actuator assembly (skid control ECU)
C1276/76	Abnormal change in output voltage of left front speed sensor	• Front speed sensor RH • Front speed sensor circuit RH • Sensor installation • Sensor rotor • Brake actuator assembly (skid control ECU)
C1277/77	Abnormal change in output voltage of right rear speed sensor	• Front speed sensor LH • Front speed sensor circuit LH • Sensor installation • Sensor rotor • Brake actuator assembly (skid control ECU)
C1278/78	Abnormal change in output voltage of left rear speed sensor	• Front speed sensor LH • Front speed sensor circuit LH • Sensor installation • Sensor rotor • Brake actuator assembly (skid control ECU)

HINT:
The codes in this table are output only in signal check function (test mode).

PROBLEM SYMPTOMS TABLE

If there are no DTCs output but the problem still occurs, check the circuits for each problem symptom in the order given in the table below and proceed to the relevant troubleshooting page.

NOTICE:

When replacing the brake actuator assembly (skid control ECU), sensor, etc., turn the ignition switch off.

ANTI LOCK BRAKE SYSTEM

Symptom	Suspected area	See page
ABS does not operate	1. Check the DTC reconfirming that the normal system code is output.	BC-19
	2. IG power source circuit	BC-56
	3. Front speed sensor circuit	BC-26
	4. Rear speed sensor circuit	BC-34
	5. Check the brake actuator assembly with the intelligent tester. (Check brake actuator assembly operation using the active test function)	BC-245
	6. If the symptoms still occur even after the above circuits in suspected areas have been inspected and proved to be normal, replace the brake actuator assembly (skid control ECU)	BC-246
ABS does not operate properly	1. Check the DTC reconfirming that the normal system code is output.	BC-19
	2. Front speed sensor circuit	BC-26
	3. Rear speed sensor circuit	BC-34
	4. Stop light switch circuit	BC-60
	5. Check the brake actuator assembly with the intelligent tester. (Check brake actuator assembly operation using the active test function)	BC-245
	6. If the symptoms still occur even after the above circuits in suspected areas have been inspected and proved to be normal, replace the brake actuator asssembly (skid control ECU)	BC-246
ABS warning light malfunction (Remains on)	1. ABS warning light circuit	BC-67
	2. Brake actuator assembly (skid control ECU)	BC-246
ABS warning light malfunction (does not come on)	1. ABS warning light circuit	BC-71
	2. Brake actuator assembly (skid control ECU)	BC-246
Brake warning light malfunction (Remains on)	1. Brake warning light circuit	BC-73
	2. Brake actuator assembly (skid control ECU)	BC-246
Brake warning light malfunction (Does not come on)	1. Brake warning light circuit	BC-79
	2. Brake actuator assembly (skid control ECU)	BC-246
ABS sensor DTC check cannot be done	1. ABS warning light circuit (Remains on)	BC-67
	2. ABS warning light circuit (Does not come on)	BC-71
	3. TC and CG terminal circuit	BC-81
	4. TS and CG terminal circuit	BC-86
	5. When the above areas (1., 2. and 3.) are all normal but the problem still occurs, replace the brake actuator assembly (skid control ECU).	BC-246

TERMINALS OF ECU

1. TERMINALS OF ECU

Skid Control ECU (Brake Actuator Assembly) A40

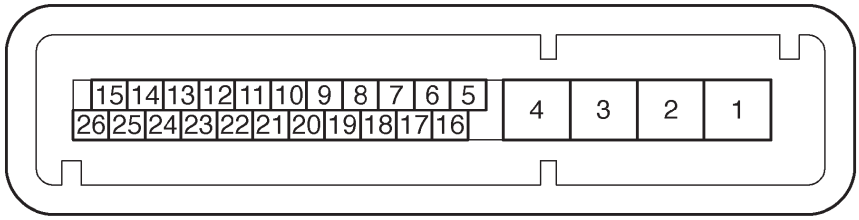

N

F045089E05

Symbols (Terminal No.)	Terminal Description
GND2 (1)	Actuator pump motor ground
+BM (2)	Motor relay power supply
+BS (3)	Solenoid valves power supply
GND1 (4)	Skid control ECU ground
FL+ (5)	Front LH (+) wheel speed signal input
FL- (6)	Front LH (-) wheel speed signal input
RL+ (7)	Front LH (+) wheel speed signal input
RR- (8)	Rear RH (-) wheel speed signal input
FR- (9)	Front RH (-) wheel speed signal input
FR+ (10)	Front RH (+) wheel speed signal input
D/G (11)	Diagnosis tester communication line
RRO (13)	Rear right wheel speed signal output
PKB (14)	Parking brake switch input
CANL (15)	CAN communication line L
RL- (17)	Rear LH (-) wheel speed signal input
IG1 (18)	ECU power supply
RR+ (19)	Rear RH (+) wheel speed signal input
STP (20)	Stop light switch input
SP1 (23)	Speed signal output for speedometer
RLO (24)	Rear left wheel speed signal output
TS (25)	Sensor check input
CANH (26)	CAN communication line H

2. TERMINAL INSPECTION

(a) Disconnect the connector and measure the voltage or resistance on the wire harness side.

BC

Skid Control ECU (harness side connector) A40

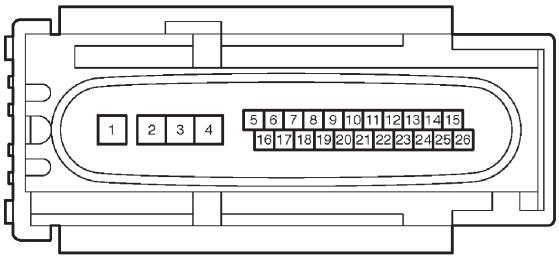

F049097E03

HINT:
Voltage cannot be measured with the connector connected to the skid control ECU as the connector is watertight.

Symbols (Terminal No.)	Wiring Color	Terminal Description	Condition	Specified Condition
GND2 (1) - Body ground	W-B - Body ground	Actuator pump motor ground	Always	Below 1 Ω
+BM (2) - Body ground	B - Body ground	Motor relay power supply	Always	10 to 14 Ω
+BS (3) - Body ground	W - Body ground	Solenoid valves power supply	Always	10 to 14 Ω
GND1 (4) - Body ground	W-B - Body ground	Skid control ECU ground	Always	Below 1 Ω
PKB (14) - Body ground	L - Body ground	Parking brake switch input	Parking brake switch ON	Below 1 Ω
PKB (14) - Body ground	L - Body ground	Parking brake switch input	Parking brake switch OFF	10 to 14 V
IG1 (18) - Body ground	BR - Body ground	ECU power supply	Ignition switch on (IG)	10 to 14 V
STP (20) - Body ground	L-B - Body ground	Stop light switch input	Stop light switch ON (Brake pedal depressed)	8 to 14 V
STP (20) - Body ground	L-B - Body ground	Stop light switch input	Stop light switch OFF (Brake pedal released)	Below 3 V

DIAGNOSIS SYSTEM

1. DIAGNOSIS

NOTICE:

When releasing the parking brake, set chocks to hold the vehicle for safety.

(a) Release the parking brake.

(b) If the skid control ECU detects a malfunction, the ABS warning light and brake warning light will come on to warn the driver. The table below indicates which light will come on when there is a malfunction in a particular function.

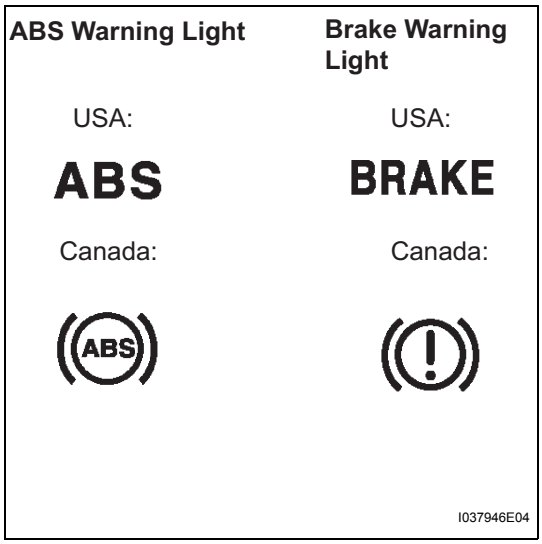

Item/Trouble Area	ABS System	EBD System	Skid Control ECU
ABS Warning light	○	○	○
Brake Warning light	-	○	○

○: Light ON

- : Light OFF

- The DTCs are simultaneously stored in memory. The DTCs can be read by connecting the SST (09843-18043) between the TC and CG terminals of the DLC3 and observing the blinking pattern of the ABS warning light, or by connecting a intelligent tester (See page BC-19).
- This system has a sensor signal check function (TEST MODE).

2. WARNING LIGHT INITIAL CHECK

NOTICE:

When releasing the parking brake, set chocks to hold the vehicle for safety.

HINT:

When the parking brake is applied or the level of the brake fluid is low, the brake warning light comes on.

BC

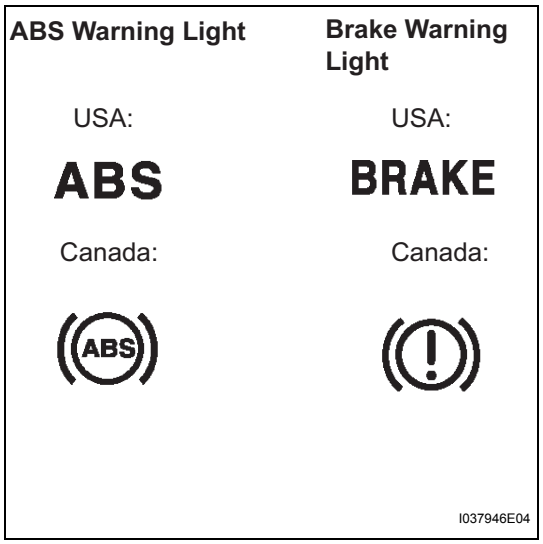

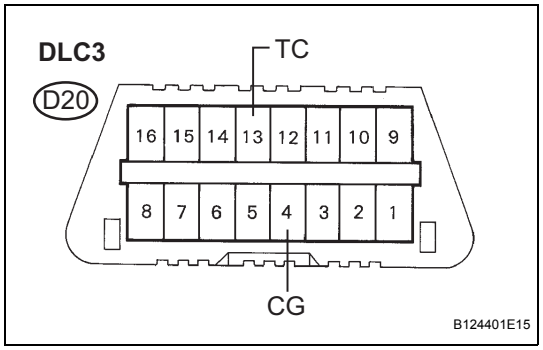

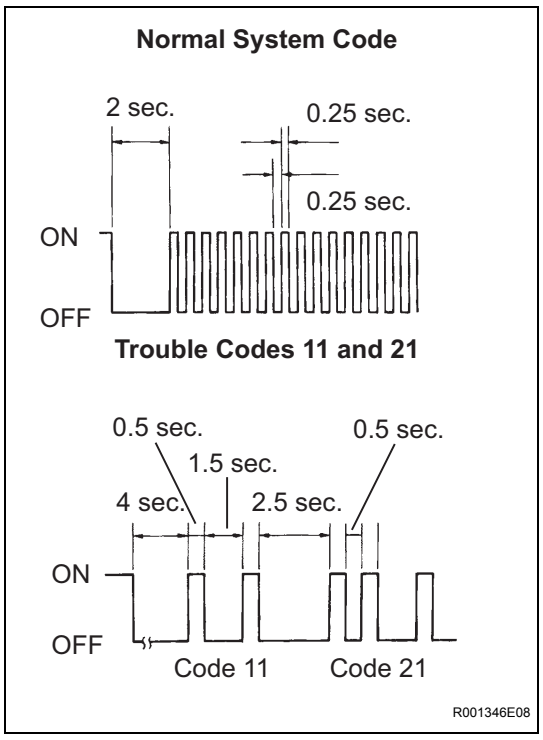

(a) Release the parking brake.
(b) Check that the ABS warning light and brake warning light come on when the ignition switch is turned on (IG) and go off in approximately 3 seconds.
(c) If the warning lights do not come on or remain on, inspect the ABS warning light circuit and/or brake warning light circuit.

Trouble Area	See procedure
ABS warning light circuit (Remains on)	BC-67
ABS warning light circuit (Does not come on)	BC-71
Brake warning light circuit (Remains on)	BC-73
Brake warning light circuit (Does not come on)	BC-71

DTC CHECK / CLEAR

1. DTC CHECK (USING SST CHECK WIRE)

(a) Check DTCs.
(1) Using SST, connect terminals TC and the CG of the DLC3.
SST 09843-18040
(2) Turn the ignition switch on (IG).

(3) Read DTCs by the blinking pattern of the ABS warning light.
HINT:
- If the ABS warning light does not blink, inspect the TC terminal circuit or ABS warning light circuit.

Trouble Area	See procedure
TC and CG terminal circuit	BC-81
ABS warning light circuit (Remains on)	BC-67
ABS warning light circuit (Does not come on)	BC-71

- As an example, the blinking patterns for a normal system code and trouble codes 11 and 21 are shown on the left.

(4) Codes are explained in the code table (See page BC-23).
(5) After completing the check, disconnect terminals TC and CG of the DLC3, and turn off the ignition switch.
If 2 or more DTCs are detected at the same time, the DTCs will be displayed in ascending order.

BC

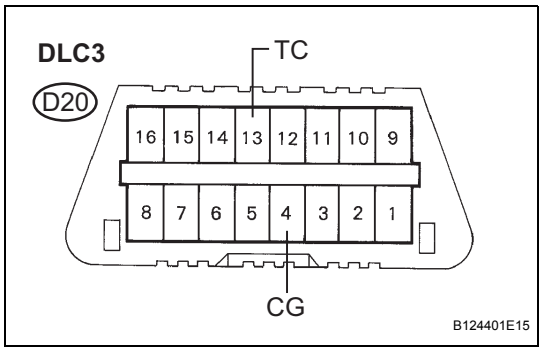

2. CLEAR DTC (USING SST CHECK WIRE)

(a) Clear the DTCs.

(1) Using SST, connect terminals TC and CG of the DLC3.

SST 09843-18040

(2) Turn the ignition switch on (IG).

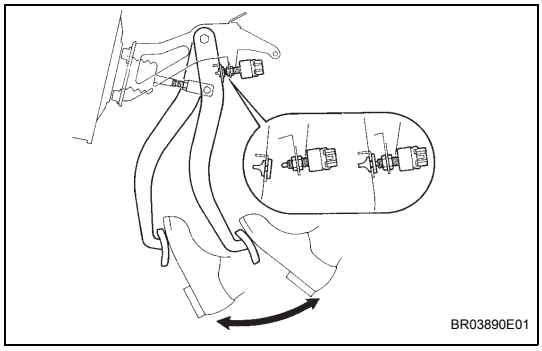

(3) Clear the DTCs stored in the ECU by depressing the brake pedal 8 times or more within 5 seconds.

(4) Check that the warning light indicates the normal system code.

(5) Remove the SST from the DLC3.

HINT:

Clearing the DTCs cannot be performed by removing the battery cable or ECU-IG fuse.

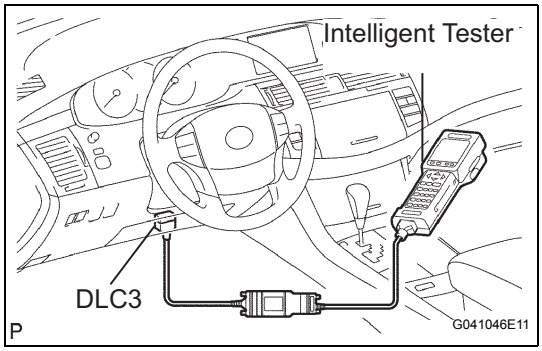

3. DTC CHECK (USING INTELLIGENT TESTER)

(a) Check DTCs.

(1) Connect the intelligent tester to the DLC3.

(2) Turn the ignition switch on (IG).

(3) Read the DTCs by following the prompts on the tester screen.

HINT:

Refer to the intelligent tester operator's manual for further details.

4. CLEAR DTC (USING INTELLIGENT TESTER)

(a) Clear the DTCs.

(1) Connect the intelligent tester to the DLC3.

(2) Turn the ignition switch on (IG).

(3) Operate the intelligent tester to clear the codes.

HINT:

Refer to the intelligent tester operator's manual for further details.

5. END OF DTC CHECK/CLEAR

(a) Turn the ignition switch on (IG).

(b) Check that the ABS warning light goes off after approximately 3 seconds.

FREEZE FRAME DATA

1. FREEZE FRAME DATA

HINT:

- Whenever a DTC is detected or the ABS operates, the skid control ECU stores the current vehicle (sensor) status as freeze frame data.
- The skid control ECU stores the number of times (maximum: 31) the ignition switch has been turned from off to the on (IG) since the last time the ABS was activated.
- Freeze frame data at the time the ABS operates: The skid control ECU stores and updates data whenever the ABS system operates.
  When the skid control ECU stores data at the time a DTC is detected, the data stored during ABS operation is erased.
- Freeze frame data at the time a DTC is detected: When the skid control ECU stores data at the time a DTC is detected, no updates will be performed until the data is cleared.

(a) Connect the intelligent tester to the DLC3.
(b) Turn the ignition switch on (IG).
(c) Select "DTC INFO" on the tester display.
(d) On the DTC data display screen, select the DTC data displayed with "*".

Intelligent tester display	Measurement Item	Reference Value
VEHICLE SPD	Vehicle speed	Speed indication on the meter
STOP LIGHT SW	Stop light switch signal	Stop light switch ON: ON, OFF: OFF
# IG ON	Number of operations of ignition switch ON after storing freeze frame data	0 to 31
SYSTEM	Operated system	ABS operated: ABS
# CODES	Number of trouble codes	min.: 0, max.: 255
TROUBLE CODE	Freeze DTC	min.: 0, max.: 255
VEHICLE ACCELERATION	Vehicle acceleration	min.: -1,869 G, max.: 1,869 G

FAIL-SAFE CHART

1. FAIL SAFE OPERATION

If there is a problem with sensor signals or brake actuator systems, the skid control ECU will prohibit power supply to the brake actuator and terminate ABS control.

ABS control will be prohibited, but EBD control continues as much as possible. If EBD control is impossible, the brake warning light will come on to warn the driver (See page BC-17).

Malfunction Area	Control Method
ABS system	Prohibits the ABS control
EBD system	Prohibits the ABS & EBD control

HINT:

If the ABS system has a malfunction, the brake system will operate normally without ABS control.

DATA LIST / ACTIVE TEST

1. DATA LIST

HINT:

According to the DATA LIST displayed on the intelligent tester, the value and status of the switch, sensor, actuator and so on can be read without part removal. Reading the DATA LIST as the first step of troubleshooting is one of the methods to shorten labor time.

(a) Connect the intelligent tester to the DLC3.
(b) Turn the ignition switch on (IG).
(c) Read the "DATA LIST" on the tester display.

Item	Measurement Item / Range (Display)	Normal Condition	Diagnostic Note
PKB SW	Parking brake switch / ON or OFF	ON: Parking brake applied OFF: Parking brake released	-
STOP LIGHT SW	Stop light switch / ON or OFF	ON: Brake pedal depressed OFF: Brake pedal released	-
ABS MOT RELAY	ABS motor relay / ON or OFF	ON: Motor relay ON OFF: Motor relay OFF	-
SOL RELAY	Solenoid relay / ON or OFF	ON: Solenoid relay ON OFF: Solenoid relay OFF	-
TEST MODE	Test mode / NORMAL or TEST	NORMAL: Normal mode TEST: During test mode	-
SRLR	ABS solenoid (SRLR) / ON or OFF	ON: Operates OFF: Does not operate	-
SRLH	ABS solenoid (SRLH) / ON or OFF	ON: Operates OFF: Does not operate	-
SRRR (SRR)	ABS solenoid (SRRR (SRR)) / ON or OFF	ON: Operates OFF: Does not operate	-
SRRH (SRH)	ABS solenoid (SRRH (SRH)) / ON or OFF	ON: Operates OFF: Does not operate	-
SFLR	ABS solenoid (SFLR) / ON or OFF	ON: Operates OFF: Does not operate	-
SFLH	ABS solenoid (SFLH) / ON or OFF	ON: Operates OFF: Does not operate	-
SFRR	ABS solenoid (SFRR) / ON or OFF	ON: Operates OFF: Does not operate	-
SFRH	ABS solenoid (SFRH) / ON or OFF	ON: Operates OFF: Does not operate	-
WHEEL SPD FR	Wheel speed sensor (FR) reading / min.: 0 km/h (0 MPH), max.: 326 km/h (202 MPH)	Actual wheel speed	Similar speed as indicated on speedometer
WHEEL SPD FL	Wheel speed sensor (FL) reading / min.: 0 km/h (0 MPH), max.: 326 km/h (202 MPH)	Actual wheel speed	Similar speed as indicated on speedometer
WHEEL SPD RR	Wheel speed sensor (RR) reading / min.: 0 km/h (0 MPH), max.: 326 km/h (202 MPH)	Actual wheel speed	Similar speed as indicated on speedometer
WHEEL SPD RL	Wheel speed sensor (RL) reading / min.: 0 km/h (0 MPH), max.: 326 km/h (202 MPH)	Actual wheel speed	Similar speed as indicated on speedometer
VEHICLE SPD	Maximum wheel speed sensor reading / min.: 0 km/h (0 MPH), max.: 326 km/h (202 MPH)	Actual wheel speed	Similar speed as indicated on speedometer
IG VOLTAGE	ECU power supply voltage / TOO LOW / NORMAL / TOO HIGH	TOO HIGH: 14.0 V or over NORMAL: 9.5 V to 14.0 V TOO LOW: below 9.5 V	-

2. ACTIVE TEST

HINT:

Performing the ACTIVE TEST using the intelligent tester allows the relay, actuator and so on to operate without parts removal. Performing the ACTIVE TEST as the first step of troubleshooting is one of the methods to shorten labor time.

It is possible to display the DATA LIST during the ACTIVE TEST.

(a) Connect the intelligent tester to the DLC3.
(b) Turn the ignition switch on (IG).
(c) According to the display on the tester, perform the "ACTIVE TEST".

Item	Vehicle Condition / Test Details	Diagnostic Note
ABS MOT RELAY	Turns ABS motor relay ON / OFF	Operating sound of motor is heard
BRAKE WRN LIGHT	Turns Brake warning light ON / OFF	Observe combination meter
ABS WRN LIGHT	Turns ABS warning light ON / OFF	Observe combination meter
SRLR	Turns ABS solenoid (SRLR) ON / OFF	Operating sound of solenoid (clicking sound) is heard
SRLH	Turns ABS solenoid (SRLH) ON / OFF	Operating sound of solenoid (clicking sound) is heard
SRRR	Turns ABS solenoid (SRRR) ON / OFF	Operating sound of solenoid (clicking sound) is heard
SRRH	Turns ABS solenoid (SRRH) ON / OFF	Operating sound of solenoid (clicking sound) is heard
SFLR	Turns ABS solenoid (SFLR) ON / OFF	Operating sound of solenoid (clicking sound) is heard
SFLH	Turns ABS solenoid (SFLH) ON / OFF	Operating sound of solenoid (clicking sound) is heard
SFRR	Turns ABS solenoid (SFRR) ON / OFF	Operating sound of solenoid (clicking sound) is heard
SFRH	Turns ABS solenoid (SFRH) ON / OFF	Operating sound of solenoid (clicking sound) is heard
SFRR & SFRH	Turns ABS solenoid (SFRR & SFRH) ON / OFF	Operating sound of solenoid (clicking sound) is heard
SFLR & SFLH	Turns ABS solenoid (SFLR & SFLH) ON / OFF	Operating sound of solenoid (clicking sound) is heard
SRH & SRR	Turns ABS solenoid (SRRR & SRRH) ON / OFF	Operating sound of solenoid (clicking sound) is heard
SRLR & SRLH	Turns ABS solenoid (SRLR & SRLH) ON / OFF	Operating sound of solenoid (clicking sound) is heard
SFRH & SFLH	Turns ABS solenoid (SFRH & SFLH) ON / OFF	Operating sound of solenoid (clicking sound) is heard

DIAGNOSTIC TROUBLE CODE CHART

NOTICE:

Turn the ignition switch off before removing parts.

HINT:

- If no abnormality is found when inspecting parts, inspect the skid control ECU and ground points for poor contact.
- If malfunction code is displayed during the DTC check, check the circuit indicated by the DTC. For details of each code, refer to the "See page" in the DTC chart.
- When 2 or more DTCs are detected, perform circuit inspection one by one until the problem is identified.

DTC chart of ABS:

DTC No.	Detection Item	Trouble Area	See page
C0200/31	Right Front Wheel Speed Sensor Signal Malfunction	1. Front speed sensor RH 2. Front speed sensor RH circuit 3. Front speed sensor rotor RH 4. Sensor installation 5. Brake actuator assembly (skid control ECU)	BC-26
C0205/32	Left Front Wheel Speed Sensor Signal Malfunction	1. Front speed sensor LH 2. Front speed sensor LH circuit 3. Front speed sensor rotor LH 4. Sensor installation 5. Brake actuator assembly (skid control ECU)	BC-26
C0210/33	Right Rear Wheel Speed Sensor Signal Malfunction	1. Rear speed sensor RH 2. Rear speed sensor RH circuit 3. Rear speed sensor rotor RH 4. Sensor installation 5. Brake actuator assembly (skid control ECU)	BC-34
C0215/34	Left Rear Wheel Speed Sensor Signal Malfunction	1. Rear speed sensor LH 2. Rear speed sensor LH circuit 3. Rear speed sensor rotor LH 4. Sensor installation 5. Brake actuator assembly (skid control ECU)	BC-34
C0226/21	SFR Solenoid Circuit	1. SFRR or SFRH circuit 2. Brake actuator assembly	BC-41
C0236/22	SFL Solenoid Circuit	1. SFLR or SFLH circuit 2. Brake actuator assembly	BC-41
C0246/23	SRR Solenoid Circuit	1. SRRR or SRRH circuit 2. Brake actuator assembly	BC-41
C0256/24	SRL Solenoid Circuit	1. SRLR or SRLH circuit 2. Brake actuator assembly	BC-41
C0273/13	Open in ABS Motor Relay Circuit	1. Brake actuator assembly (motor relay) 2. ABS/VSC No.1 fuse 3. Wire harness (+BM circuit)	BC-44
C0278/11	Open in ABS Solenoid Relay Circuit	1. Brake actuator assembly (solenoid relay) 2. ABS/VSC No.2 fuse 3. Wire harness (+BS circuit)	BC-49
C1237/37	Speed Sensor Rotor Faulty	1. Brake actuator assembly (skid control ECU) 2. Speed sensor rotor (front) 3. Rear axle hub & bearing assembly 4. Speed sensor 5. Speed sensor circuit 6. Tire & wheel size 7. Tire deformation	BC-53

DTC No.	Detection Item	Trouble Area	See page
C1241/41	Low Battery Positive Voltage or Abnormally High Battery Positive Voltage	1. Battery 2. Charging system 3. Power source circuit	BC-56
C1249/58	Stop Light Switch Circuit	1. Stop light switch 2. Stop light switch circuit	BC-60
C1300/62	Skid Control ECU Malfunction	Brake actuator assembly (skid control ECU)	BC-64
C1301/42	CAN Communication System Malfunction	1. CAN communication system 2. Wire harness	BC-66
C1330/35	Right Front Speed Sensor Circuit	1. Front speed sensor RH 2. Front speed sensor RH circuit 3. Sensor installation	BC-26
C1331/36	Left Front Speed Sensor Circuit	1. Front speed sensor LH 2. Front speed sensor LH circuit 3. Sensor installation	BC-26
C1332/38	Right Rear Speed Sensor Circuit	1. Rear speed sensor RH 2. Rear speed sensor RH circuit 3. Sensor installation	BC-34
C1333/39	Left Rear Speed Sensor Circuit	1. Rear speed sensor LH 2. Rear speed sensor LH circuit 3. Sensor installation	BC-34

Test Mode DTC of ABS:

DTC No.	Detection Item	Trouble Area	See page
C1271/71	Low Output Signal of Front Speed Sensor RH (Test Mode DTC)	1. Front speed sensor RH 2. Front speed sensor circuit RH 3. Sensor installation 4. Sensor rotor 5. Brake actuator assembly (skid control ECU)	BC-26
C1272/72	Low Output Signal of Front Speed Sensor LH (Test Mode DTC)	1. Front speed sensor LH 2. Front speed sensor circuit LH 3. Sensor installation 4. Sensor rotor 5. Brake actuator assembly (skid control ECU)	BC-26
C1273/73	Low Output Signal of Rear Speed Sensor RH (Test Mode DTC)	1. Rear speed sensor RH 2. Rear speed sensor circuit RH 3. Sensor installation 4. Sensor rotor 5. Brake actuator assembly (skid control ECU)	BC-34
C1274/74	Low Output Signal of Rear Speed Sensor LH (Test Mode DTC)	1. Rear speed sensor LH 2. Rear speed sensor circuit LH 3. Sensor installation 4. Sensor rotor 5. Brake actuator assembly (skid control ECU)	BC-34
C1275/75	Abnormal Change in Output Signal of Front Speed Sensor RH (Test Mode DTC)	1. Front speed sensor RH 2. Front speed sensor circuit RH 3. Sensor installation 4. Sensor rotor 5. Brake actuator assembly (skid control ECU)	BC-26
C1276/76	Abnormal Change in Output Signal of Front Speed Sensor LH (Test Mode DTC)	1. Front speed sensor RH 2. Front speed sensor circuit RH 3. Sensor installation 4. Sensor rotor 5. Brake actuator assembly (skid control ECU)	BC-26

DTC No.	Detection Item	Trouble Area	See page
C1277/77	Abnormal Change in Output Signal of Rear Speed Sensor RH (Test Mode DTC)	1. Front speed sensor LH 2. Front speed sensor circuit LH 3. Sensor installation 4. Sensor rotor 5. Brake actuator assembly (skid control ECU)	BC-34
C1278/78	Abnormal Change in Output Signal of Rear Speed Sensor LH (Test Mode DTC)	1. Front speed sensor LH 2. Front speed sensor circuit LH 3. Sensor installation 4. Sensor rotor 5. Brake actuator assembly (skid control ECU)	BC-34

DTC	**C0200/31**	**Right Front Wheel Speed Sensor Signal Malfunction**
DTC	**C0205/32**	**Left Front Wheel Speed Sensor Signal Malfunction**
DTC	**C1271/71**	**Low Output Signal of Front Speed Sensor RH (Test Mode DTC)**
DTC	**C1272/72**	**Low Output Signal of Front Speed Sensor LH (Test Mode DTC)**
DTC	**C1275/75**	**Abnormal Change in Output Signal of Front Speed Sensor RH (Test Mode DTC)**
DTC	**C1276/76**	**Abnormal Change in Output Signal of Front Speed Sensor LH (Test Mode DTC)**
DTC	**C1330/35**	**Right Front Speed Sensor Circuit**
DTC	**C1331/36**	**Left Front Speed Sensor Circuit**

DESCRIPTION

The speed sensor detects wheel speed and transmits the appropriate signals to the skid control ECU. These signals are used for control of the ABS control system. Each of the front and rear rotors has 48 serrations.

When the rotors rotate, the magnetic field generated by the permanent magnet in the speed sensor induces AC voltage. Since the frequency of this AC voltage changes in direct proportion to the speed of the rotor, the frequency is used by the skid control ECU to detect the speed of each wheel.

DTCs C1271/71, C1272/72, C1275/75 and C1276/76 are output only in the test mode (SIGNAL CHECK). During test mode (SIGNAL CHECK), the skid control ECU records DTCs, if the abnormal sensor signal is received.

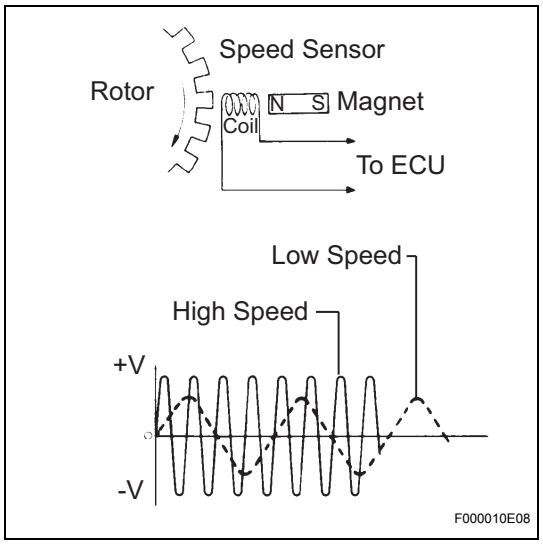

DTC No.	DTC Detecting Condition	Trouble Area
C0200/31 C0205/32	When either of the following (1 or 2) is detected : 1. Rapid acceleration/deceleration continues for 20 seconds or more with the brake pedal depressed, or for 5 seconds or more without the brake pedal depressed. 2. A wheel speed of 0 mph (0 km/h) is detected when the vehicle speed has reached 8 mph (12 km/h) after starting the vehicle.	• Front speed sensor RH and/or LH • Front speed sensor circuit RH and/or LH • Speed sensor rotor RH and/or LH • Sensor installation • Brake actuator assembly (skid control ECU)
C1330/35 C1331/36	Abnormality in the resistance value of each speed sensor is detected.	• Front speed sensor RH and/or LH • Speed sensor circuit RH and/or LH • Sensor installation

HINT:
DTC No.C0200/31 and C1330/35 are for the front speed sensor RH.
DTC No.C0205/32 and C1331/36 are for the front speed sensor LH.

WIRING DIAGRAM

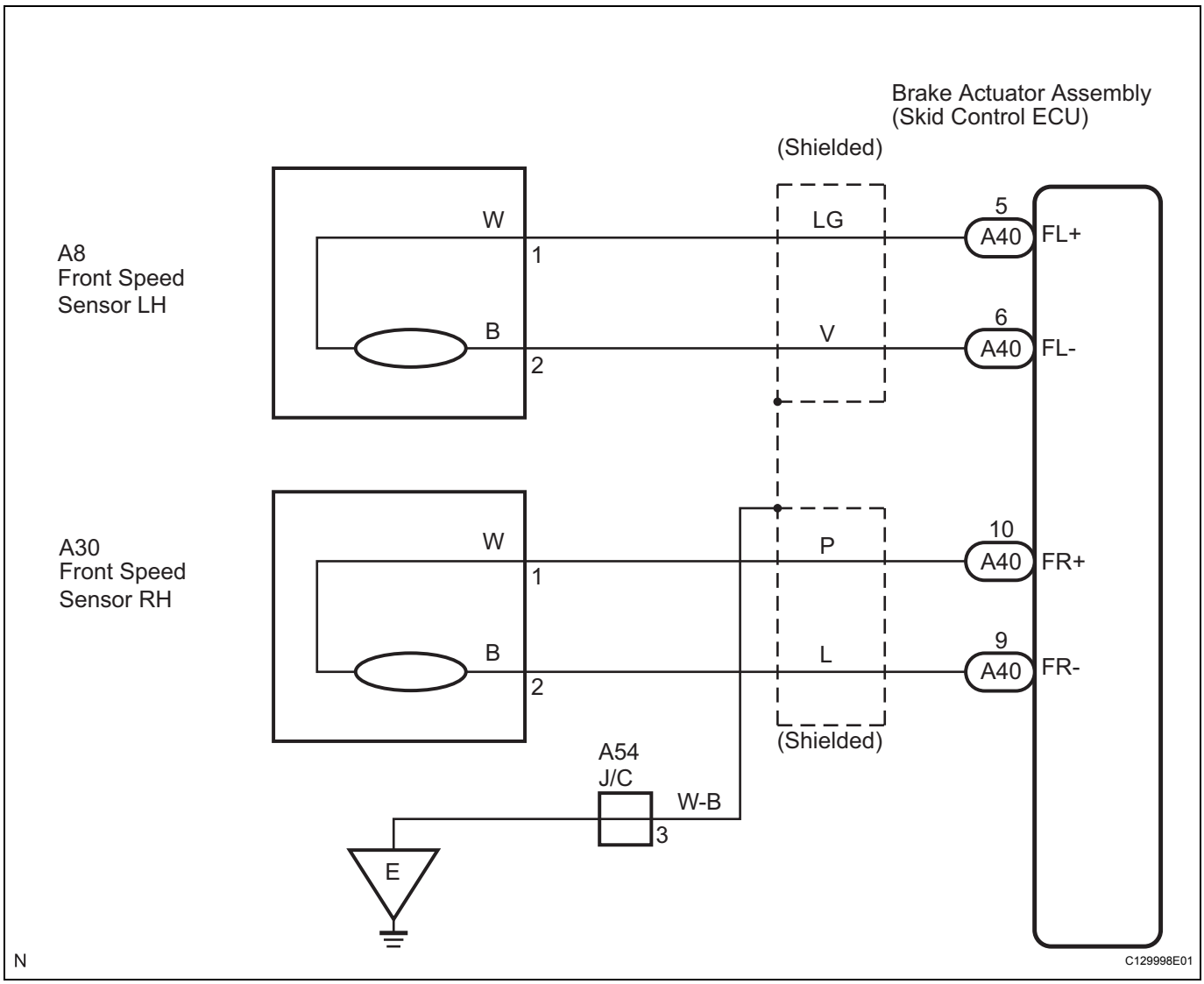

INSPECTION PROCEDURE

HINT:
Start the inspection from step 1 when using the intelligent tester and start from step 2 when not using the intelligent tester.

BC

1	READ VALUE OF INTELLIGENT TESTER (FRONT SPEED SENSOR)

(a) Connect the intelligent tester to the DLC3.
(b) Start the engine.
(c) Select "DATA LIST" and read the value displayed on the intelligent tester.

DATA LIST: ABS

Item	Measurement Item / Range (Display)	Normal condition
WHEEL SPD FR	Wheel speed sensor (FR) reading / min.: 0 MPH (0 km/h), max.: 202 MPH (326 km/h)	Actual wheel speed
WHEEL SPD FL	Wheel speed sensor (FL) reading / min.: 0 MPH (0 km/h), max.: 202 MPH (326 km/h)	Actual wheel speed

(d) Check that there is no difference between the speed value output from the speed sensor displayed on the intelligent tester and the speed value displayed on the speedometer when driving the vehicle .

OK:

The speed value output from the speed sensor displayed on the intelligent tester is the same as the actual vehicle speed.

NG → **Go to step 5**

OK

2 PERFORM TEST MODE (SIGNAL CHECK)

(a) Check if test mode (signal check) DTCs are detected.

Result

Result	Proceed to
Test mode (signal check) DTC is not output	A
Test mode (signal check) DTC is output	B

B → **Go to step 5**

A

3 INSPECT SPEED SENSOR OUTPUT SIGNAL

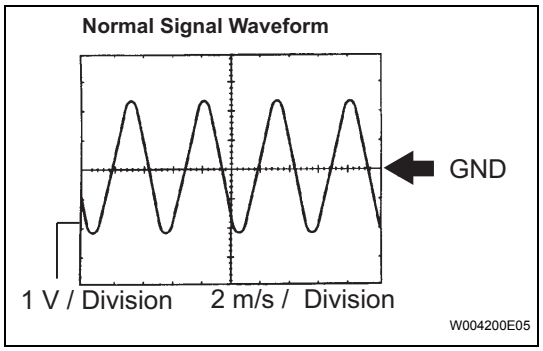

(a) INSPECTION USING OSCILLOSCOPE
(1) Disconnect the front speed sensor connector.
(2) Connect the oscilloscope to terminals 1 and 2 of the front speed sensor.
(3) Check that a waveform is output when the tires are rotated.

OK:

A waveform as shown in the figure should be output.

HINT:

- As vehicle speed (wheel rotation speed) increases, the width of the waveform narrows and the fluctuation in the output voltage becomes greater.
- When noise is identified in the waveform on the oscilloscope, error signals are generated due to rotor scratches, looseness or foreign matter attached to the speed sensor.

NG → **Go to step 11**

OK

4 RECONFIRM DTC

(a) Clear the DTC.

BC

(b) Start the engine.
(c) Drive the vehicle at the speed of 20 mph (32 km/h) or more for 60 seconds or more.
(d) Check that the same DTC is recorded.

Result

Result	Proceed to
DTC is not output	A
DTC is output	B

HINT:
- It is suspected that the DTCs were output due to a bad connection of the connector terminal.
- If troubleshooting has been carried out according to the PROBLEM SYMPTOMS TABLE, refer back to the table and proceed to the next step (See page BC-15).

B → **Go to step 5**

A

END

5 INSPECT FRONT SPEED SENSOR INSTALLATION

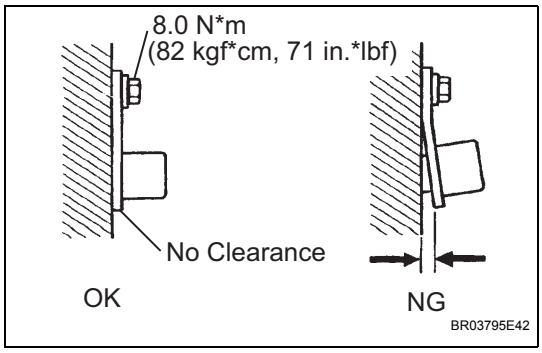

(a) Check the front speed sensor installation.

OK:
The installation bolt is tightened properly.
There is no clearance between the sensor and front steering knuckle.

Torque: 8.0 N*m (82 kgf*cm, 71 in.*lbf)

NOTICE:
Check the speed sensor signal after replacement (See page BC-11).

NG → **INSTALL FRONT SPEED SENSOR CORRECTLY OR REPLACE FRONT SPEED SENSOR**

OK

6 INSPECT FRONT SPEED SENSOR

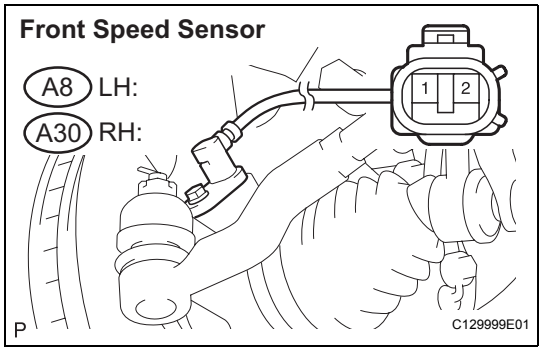

(a) Make sure that there is no looseness at the locking part and the connecting part of the connectors.
(b) Disconnect the front speed sensor connectors.
(c) Measure the resistance according to the value(s) in the table below.

Resistance:

LH

Tester Connection	Specified Condition
A8-1 (FL+) - A8-2 (FL-)	1.22 to 0.92 kΩ
A8-1 (FL+) - Body ground	10 kΩ or higher

Tester Connection	Specified Condition
A8-2 (FL-) - Body ground	10 kΩ or higher

RH

Tester Connection	Specified Condition
A30-1 (FR+) - A30-2 (FR-)	1.22 to 0.92 kΩ
A30-1 (FR+) - Body ground	10 kΩ or higher
A30-2 (FR-) - Body ground	10 kΩ or higher

NOTICE:
Check the speed sensor signal after replacement (See page BC-11).

NG → **REPLACE FRONT SPEED SENSOR**

OK

7 CHECK HARNESS AND CONNECTOR (FRONT SPEED SENSOR TO SKID CONTROL ECU)

Skid control ECU
(harness side connector front view)

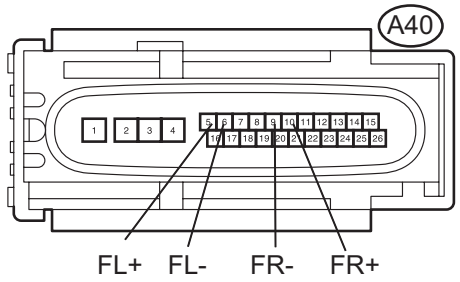

Front Speed Sensor
(harness side connector front view)

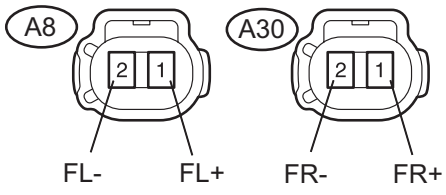

N C130000E01

(a) Disconnect the skid control ECU connector and the front speed sensor connectors.
(b) Measure the resistance according to the value(s) in the table below.

Resistance:
LH

Tester Connection	Specified Condition
A40-5 (FL+) - A8-1 (FL+)	Below 1 Ω
A40-6 (FL-) - A8-2 (FL-)	Below 1 Ω
A8-1 (FL+) - Body ground	10 kΩ or higher
A8-2 (FL-) - Body ground	10 kΩ or higher

RH

Tester Connection	Specified Condition
A40-10 (FR+) - A30-1 (FR+)	Below 1 Ω
A40-9 (FR-) - A30-2 (FR-)	Below 1 Ω
A30-1 (FR+) - Body ground	10 kΩ or higher
A30-2 (FR-) - Body ground	10 kΩ or higher

NG → **REPAIR OR REPLACE HARNESS OR CONNECTOR (SPEED SENSOR CIRCUIT)**

OK

BC

8	INSPECT SPEED SENSOR OUTPUT SIGNAL

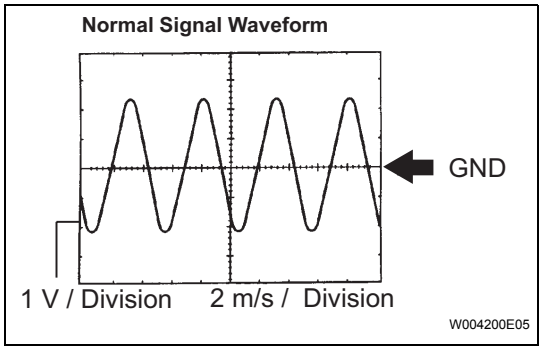

(a) INSPECTION USING OSCILLOSCOPE
(1) Disconnect the front speed sensor connector.
(2) Connect the oscilloscope to terminals 1 and 2 of the front speed sensor.
(3) Check that a waveform is output when the tires are rotated.

OK:

A waveform as shown in the figure should be output.

HINT:

- As vehicle speed (wheel rotation speed) increases, the width of the waveform narrows and the fluctuation in the output voltage becomes greater.
- When noise is identified in the waveform on the oscilloscope, error signals are generated due to rotor scratches, looseness or foreign matter attached to the speed sensor.

NG → **Go to step 11**

OK

9	READ VALUE OF INTELLIGENT TESTER (FRONT SPEED SENSOR)

(a) Connect the intelligent tester to the DLC3.
(b) Start the engine.
(c) Select "DATA LIST" and read the value displayed on the intelligent tester.

DATA LIST: ABS

Item	Measurement Item / Range (Display)	Normal condition
WHEEL SPD FR	Wheel speed sensor (FR) reading / min.: 0 MPH (0 km/h), max.: 202 MPH (326 km/h)	Actual wheel speed
WHEEL SPD FL	Wheel speed sensor (FL) reading / min.: 0 MPH (0 km/h), max.: 202 MPH (326 km/h)	Actual wheel speed

BC

(d) Check that there is no difference between the speed value output from the speed sensor displayed on the intelligent tester and the speed value displayed on the speedometer when driving the vehicle .

OK:

The speed value output from the speed sensor displayed on the intelligent tester is the same as the actual vehicle speed.

HINT:

If troubleshooting has been carried out according to the PROBLEM SYMPTOMS TABLE, refer back to the table and proceed to the next step before replacing the part (See page BC-15).

NG → **REPLACE BRAKE ACTUATOR ASSEMBLY**

OK

10	RECONFIRM DTC

(a) Clear the DTC.
(b) Start the engine.
(c) Drive the vehicle at the speed of 20 mph (32 km/h) or more for 60 seconds or more.
(d) Check that the same DTC is recorded.

Result

Result	Proceed to
DTC is not output	A
TDTC is output	B

HINT:
- It is suspected that the DTCs were output due to a bad connection of the connector terminal.
- If troubleshooting has been carried out according to the PROBLEM SYMPTOMS TABLE, refer back to the table and proceed to the next step (See page BC-15).

B → **Go to step 11**

A

END

11	INSPECT SPEED SENSOR TIP

(a) Remove the front speed sensor (See page BC-249).
(b) Check the sensor tip.

OK:

No scratches or foreign matter on the sensor tip.

NOTICE:

Check the speed sensor signal after cleaning or replacement (See page BC-11).

NG → **CLEAN OR REPLACE SPEED SENSOR**

OK

CLEAN OR REPLACE SPEED SENSOR ROTOR

DTC	C0210/33	Right Rear Wheel Speed Sensor Signal Malfunction
DTC	C0215/34	Left Rear Wheel Speed Sensor Signal Malfunction
DTC	C1273/73	Low Output Signal of Rear Speed Sensor RH (Test Mode DTC)
DTC	C1274/74	Low Output Signal of Rear Speed Sensor LH (Test Mode DTC)
DTC	C1277/77	Abnormal Change in Output Signal of Rear Speed Sensor RH (Test Mode DTC)
DTC	C1278/78	Abnormal Change in Output Signal of Rear Speed Sensor LH (Test Mode DTC)
DTC	C1332/38	Right Rear Speed Sensor Circuit
DTC	C1333/39	Left Rear Speed Sensor Circuit

DESCRIPTION

Refer to DTCs C0200/31, C0205/32, C1330/35, and C1331/36 (See page BC-26).
DTCs C1273/73, C1274/74, C1277/77 and C1278/78 are output only in the test mode (SIGNAL CHECK). During test mode (SIGNAL CHECK), the skid control ECU records DTCs, if the abnormal sensor signal is received.

DTC No.	DTC Detecting Condition	Trouble Area
C0210/33 C0215/34	When either of the following (1 or 2) is detected : 1. Rapid acceleration/deceleration continues for 20 seconds or more with the brake pedal depressed, or for 5 seconds or more without the brake pedal depressed. 2. A wheel speed of 0 mph (0 km/h) is detected when the vehicle speed has reached 8 mph (12 km/h) after starting the vehicle.	• Rear speed sensor RH and/or LH • Rear speed sensor circuit RH and/or LH • Speed sensor rotor RH and/or LH • Sensor installation
C1332/38 C1333/39	Abnormality in the resistance value of each speed sensor is detected.	• Rear speed sensor RH and/or LH • Speed sensor circuit RH and/or LH • Sensor installation

HINT:
DTC No. C0210/33 and C1332/38 are for the rear speed sensor RH.
DTC No. C0215/34 and C1333/39 are for the rear speed sensor LH.

WIRING DIAGRAM

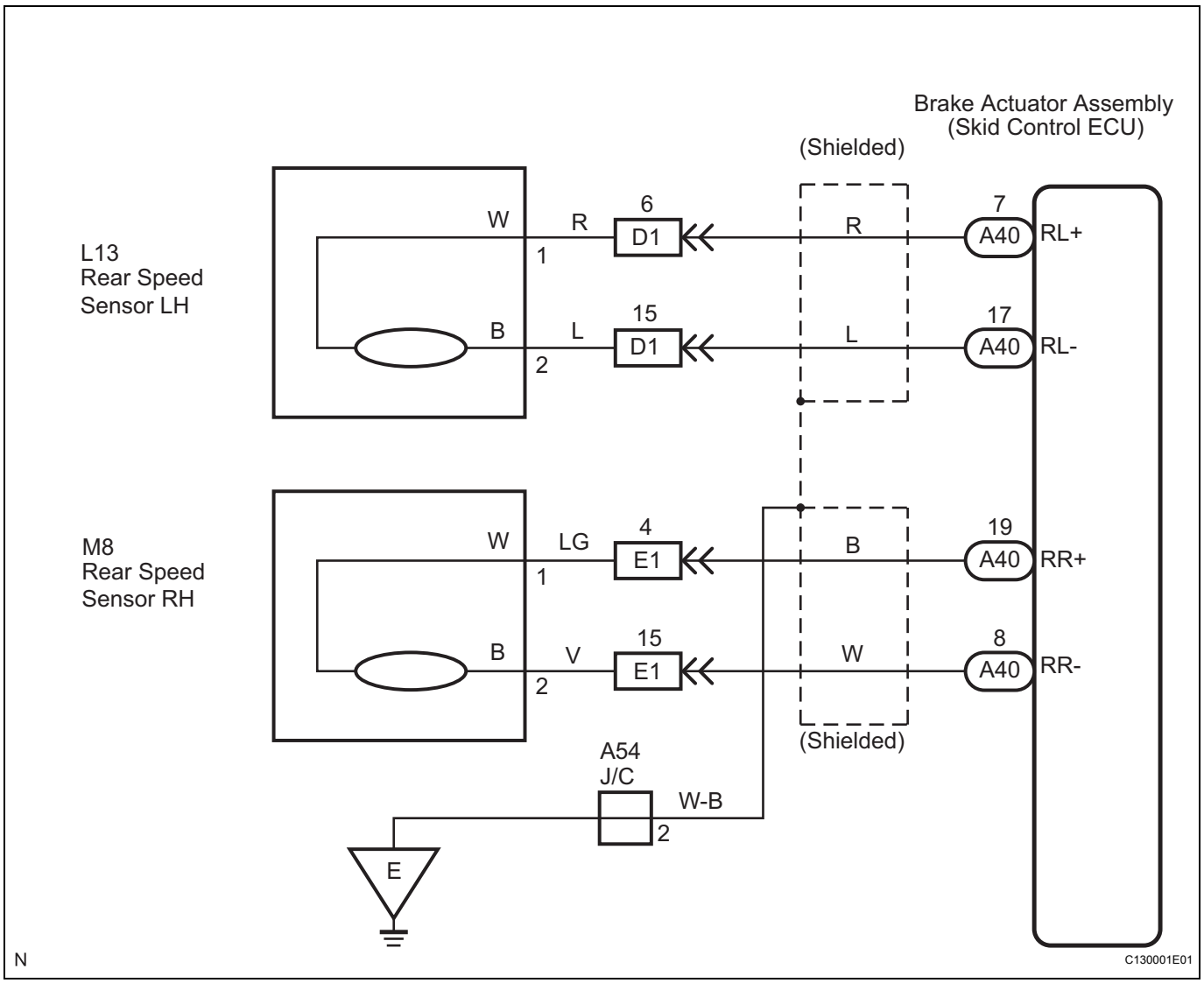

INSPECTION PROCEDURE

HINT:
Start the inspection from step 1 when using the intelligent tester and start from step 2 when not using the intelligent tester.

1	READ VALUE OF INTELLIGENT TESTER (REAR SPEED SENSOR)

BC

(a) Connect the intelligent tester to the DLC3.
(b) Start the engine.
(c) Select "DATA LIST" and read the value displayed on the intelligent tester.

DATA LIST: ABS

Item	Measurement Item / Range (Display)	Normal condition
WHEEL SPD RR	Wheel speed sensor (RR) reading / min.: 0 MPH (0 km/h), max.: 202 MPH (326 km/h)	Actual wheel speed
WHEEL SPD RL	Wheel speed sensor (RL) reading / min.: 0 MPH (0 km/h), max.: 202 MPH (326 km/h)	Actual wheel speed

(d) Check that there is no difference between the speed value output from the speed sensor displayed on the intelligent tester and the speed value displayed on the speedometer when driving the vehicle .

OK:

The speed value output from the speed sensor displayed on the intelligent tester is the same as the actual vehicle speed.

NG → **Go to step 5**

OK

2	PERFORM TEST MODE (SIGNAL CHECK)

(a) Check if test mode (signal check) DTCs are detected.

Result

Result	Proceed to
Test mode (signal check) DTC is not output	A
Test mode (signal check) DTC is output	B

B → **Go to step 5**

A

3	INSPECT SPEED SENSOR OUTPUT SIGNAL

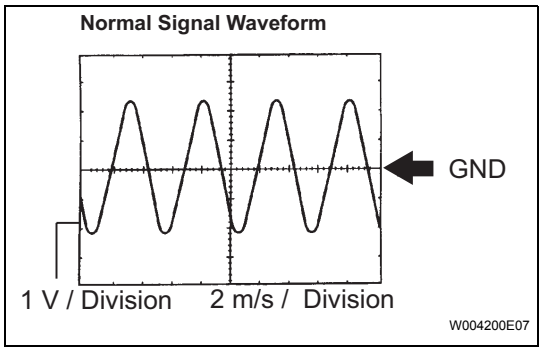

(a) INSPECTION USING OSCILLOSCOPE

(1) Disconnect the rear speed sensor connector.

(2) Connect the oscilloscope to terminals 1 and 2 of the rear speed sensor.

(3) Check that a waveform is output when the tires are rotated.

OK:

A waveform as shown in the figure should be output.

HINT:

- As vehicle speed (wheel rotation speed) increases, the width of the waveform narrows and the fluctuation in the output voltage becomes greater.
- When noise is identified in the waveform on the oscilloscope, error signals are generated due to rotor scratches, looseness or foreign matter attached to the speed sensor.

NG → **CLEAN OR REPLACE SPEED SENSOR AND SENSOR ROTOR**

OK

BC

4	RECONFIRM DTC

(a) Clear the DTC.
(b) Start the engine.
(c) Drive the vehicle at the speed of 20 mph (32 km/h) or more for 60 seconds or more.
(d) Check that the same DTC is recorded.

Result

Result	Proceed to
DTC is not output	A
DTC is output	B

HINT:
- It is suspected that the DTCs were output due to a bad connection of the connector terminal.
- If troubleshooting has been carried out according to the PROBLEM SYMPTOMS TABLE, refer back to the table and proceed to the next step (See page BC-15).

B → **Go to step 5**

A →

END

5	INSPECT REAR SPEED SENSOR INSTALLATION

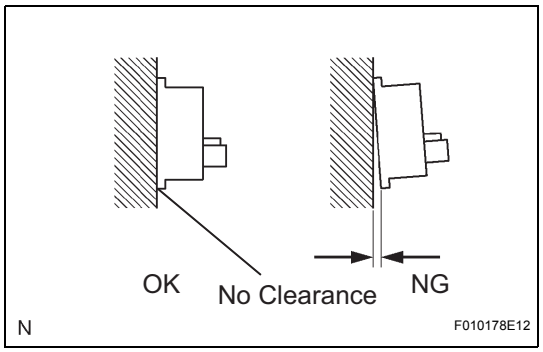

(a) Check the rear speed sensor installation.

OK:

There is no clearance between the sensor and rear axle carrier.

Torque: 8.0 N*m (82 kgf*cm, 71 in.*lbf)

NOTICE:

Check the speed sensor signal after replacement (See page BC-11).

NG → **INSTALL REAR SPEED SENSOR CORRECTLY OR REPLACE REAR SPEED SENSOR**

OK →

BC

6 INSPECT REAR SPEED SENSOR

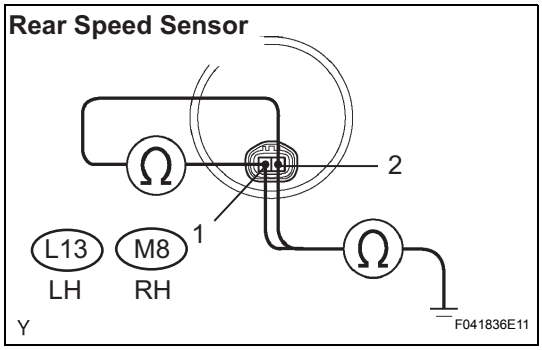

(a) Disconnect the rear speed sensor connector.
(b) Measure the resistance according to the value(s) in the table below.

Resistance:

LH

Tester Connection	Specified Condition
L13-1 (RL+) - L13-2 (RL-)	Below 2.2 kΩ
L13-1 (RL+) - Body ground	10 kΩ or higher
L13-2 (RL-) - Body ground	10 kΩ or higher

RH

Tester Connection	Specified Condition
M8-1 (RR+) - M8-2 (RR-)	Below 2.2 kΩ
M8-1 (RR+) - Body ground	10 kΩ or higher
M8-2 (RR-) - Body ground	10 kΩ or higher

NOTICE:
Check the speed sensor signal after replacement (See page BC-11).

NG → **REPLACE REAR SPEED SENSOR**

OK

7 CHECK HARNESS AND CONNECTOR (REAR SPEED SENSOR TO SKID CONTROL ECU)

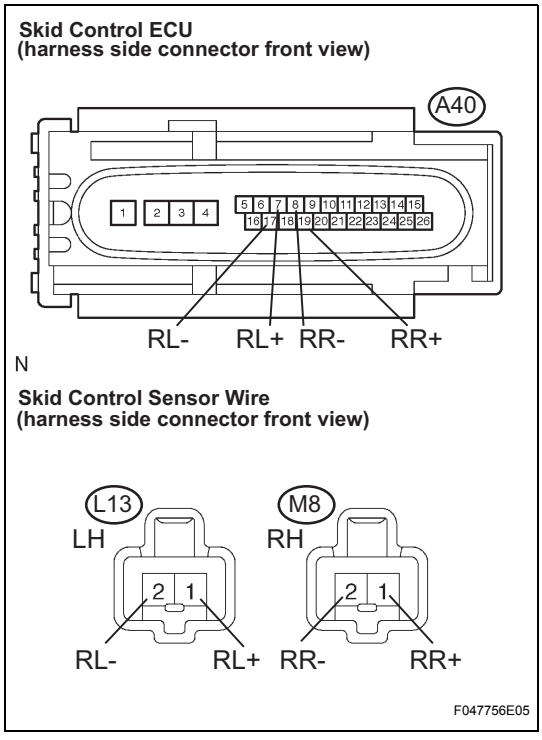

(a) SKID CONTROL ECU TO SKID CONTROL SENSOR WIRE:
(1) Disconnect the skid control ECU connector and the rear speed sensor connector.
(2) Disconnect the skid control sensor wire.
(3) Measure the resistance according to the value(s) in the table below.

Resistance:

LH

Tester Connection	Specified Condition
L13-1 (RL+) - A40-7 (RL+)	Below 1 Ω
L13-2 (RL-) - A40-17 (RL-)	Below 1 Ω
L13-1 (RL+) - Body ground	10 kΩ or higher
L13-2 (RL-) - Body ground	10 kΩ or higher

RH

Tester Connection	Specified Condition
M8-1 (RR+) - A40-19 (RR+)	Below 1 Ω
M8-2 (RR-) - A40-8 (RR-)	Below 1 Ω
M8-1 (RR+) - Body ground	10 kΩ or higher
M8-2 (RR-) - Body ground	10 kΩ or higher

BC

NG → **REPAIR OR REPLACE HARNESS OR CONNECTOR (SKID CONTROL ECU TO SKID CONTROL SENSOR WIRE)**

OK

8 CHECK SKID CONTROL SENSOR WIRE

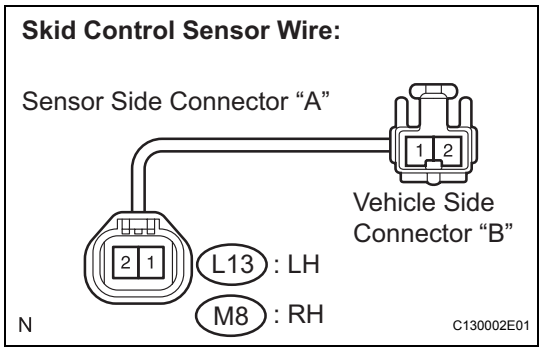

(a) SKID CONTROL SENSOR WIRE:
(1) Measure the resistance according to the value(s) in the table below.

Resistance:

LH

Tester Connection	Specified Condition
L13 (A-1) - L13 (B-1)	Below 1 Ω
L13 (A-1) - L13 (B-2)	10 kΩ or higher
L13 (A-1) - Body ground	10 kΩ or higher
L13 (A-2) - L13 (B-2)	Below 1 Ω
L13 (A-2) - L13 (B-1)	10 kΩ or higher
L13 (A-2) - Body ground	10 kΩ or higher

RH

Tester Connection	Specified Condition
M8 (A-1) - M8 (B-1)	Below 1 Ω
M8 (A-1) - M8 (B-2)	10 kΩ or higher
M8 (A-1) - Body ground	10 kΩ or higher
M8 (A-2) - M8 (B-2)	Below 1 Ω
M8 (A-2) - M8 (B-1)	10 kΩ or higher
M8 (A-2) - Body ground	10 kΩ or higher

NG → **REPAIR OR REPLACE SKID CONTROL SENSOR WIRE**

OK

9 INSPECT SPEED SENSOR OUTPUT SIGNAL

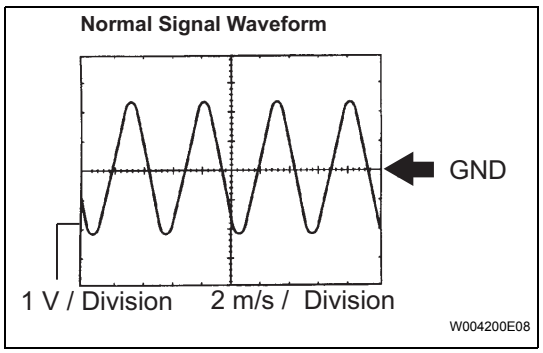

(a) INSPECTION USING OSCILLOSCOPE
(1) Disconnect the rear speed sensor connector.
(2) Connect the oscilloscope to terminals 1 and 2 of the rear speed sensor.
(3) Check that a waveform is output when the tires are rotated.

OK:

A waveform as shown in the figure should be output.

HINT:

- As vehicle speed (wheel rotation speed) increases, the width of the waveform narrows and the fluctuation in the output voltage becomes greater.

BC

- When noise is identified in the waveform on the oscilloscope, error signals are generated due to rotor scratches, looseness or foreign matter attached to the speed sensor.

NG → **CLEAN OR REPLACE SPEED SENSOR AND SENSOR ROTOR**

OK

10	READ VALUE OF INTELLIGENT TESTER (REAR SPEED SENSOR)

(a) Connect the intelligent tester to the DLC3.
(b) Start the engine.
(c) Select "DATA LIST" and read the value displayed on the intelligent tester.

DATA LIST: ABS

Item	Measurement Item / Range (Display)	Normal condition
WHEEL SPD RR	Wheel speed sensor (RR) reading / min.: 0 MPH (0 km/h), max.: 202 MPH (326 km/h)	Actual wheel speed
WHEEL SPD RL	Wheel speed sensor (RL) reading / min.: 0 MPH (0 km/h), max.: 202 MPH (326 km/h)	Actual wheel speed

(d) Check that there is no difference between the speed value output from the speed sensor displayed on the intelligent tester and the speed value displayed on the speedometer when driving the vehicle .

OK:

The speed value output from the speed sensor displayed on the intelligent tester is the same as the actual vehicle speed.

HINT:

- It is suspected that the DTCs were output due to a bad connection of the connector terminal.
- If troubleshooting has been carried out according to the PROBLEM SYMPTOMS TABLE, refer back to the table and proceed to the next step (See page BC-15).

NG → **REPLACE BRAKE ACTUATOR ASSEMBLY**

OK

BC

END

DTC	C0226/21	SFR Solenoid Circuit

DTC	C0236/22	SFL Solenoid Circuit

DTC	C0246/23	SRR Solenoid Circuit

DTC	C0256/24	SRL Solenoid Circuit

DESCRIPTION

These solenoids turn on when receiving signals from the skid control ECU and control the pressure acting on the wheel cylinders to control braking force.

DTC No.	DTC Detecting Condition	Trouble Area
C0226/21 C0236/22 C0246/23 C0256/24	Solenoid valve signal does not match the check result.	• Each solenoid circuit • Brake actuator assembly

WIRING DIAGRAM

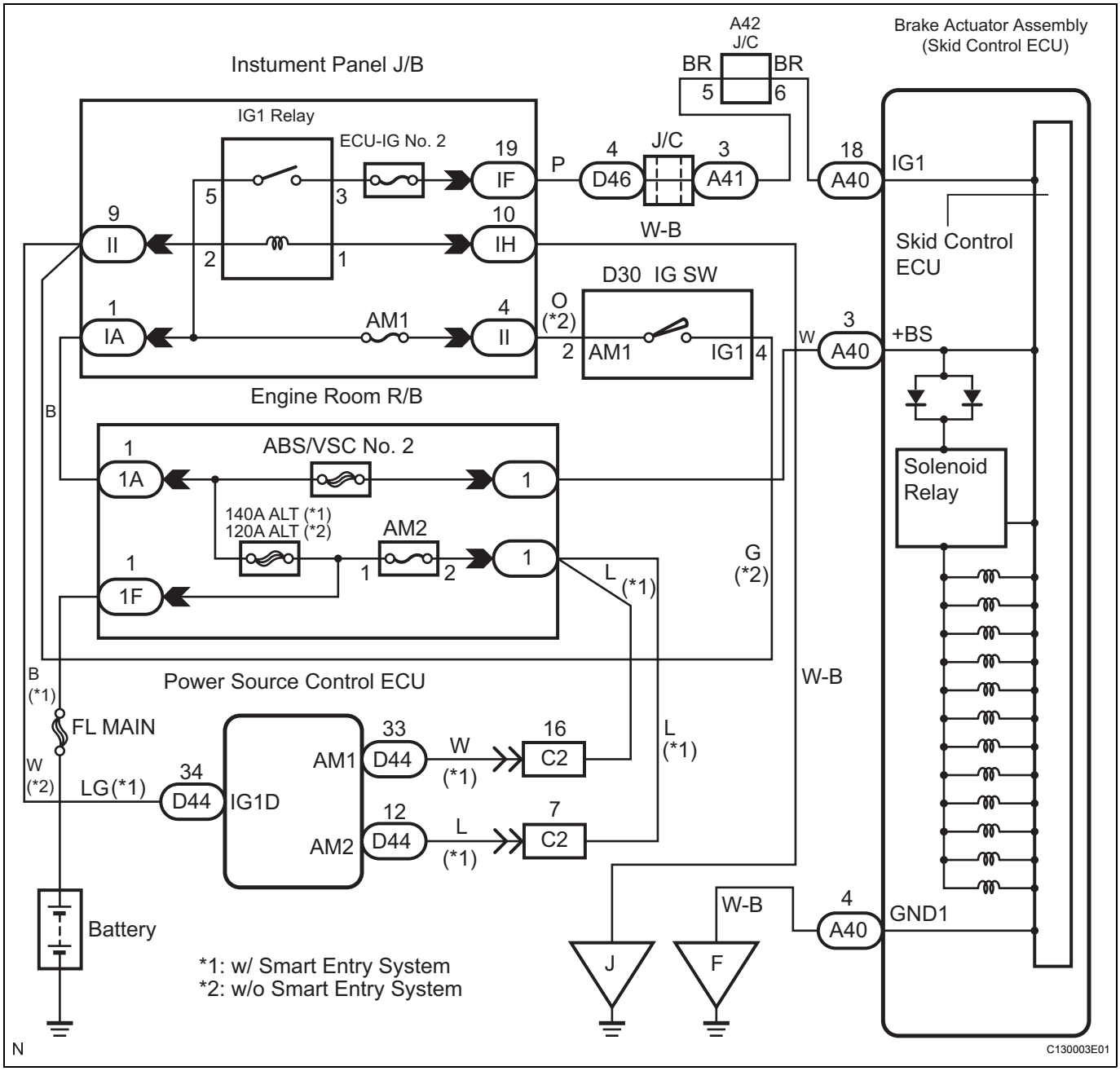

BC INSPECTION PROCEDURE

1	RECONFIRM DTC

HINT:
These codes are detected when a problem is identified in the brake actuator assembly.
The solenoid circuit is in the brake actuator assembly. Therefore, solenoid circuit inspection and solenoid unit inspection cannot be performed. Be sure to check if the DTC is output before replacing the brake actuator assembly.

(a) Clear the DTC.
(b) Start the engine.

(c) Drive the vehicle at the speed of 12 mph (20km/h) or more for 30 seconds or more.
(d) Check that the same DTC is recorded.

Result

Result	Proceed to
DTC is not output	A
DTC is output	B

HINT:
- If the normal system code is output (the malfunction code is not output), slightly jiggle the connectors, wire harnesses, and fuses of the brake actuator assembly. Make sure that no DTCs are output.
- If any DTCs are output while jiggling a connector or wire harness of the brake actuator (skid control ECU), inspect and repair the connector or wire harness.
- These DTCs may be stored due to a malfunction in the connector terminal connection, etc.

B → **REPLACE BRAKE ACTUATOR ASSEMBLY**

A

END

DTC	C0273/13	Open in ABS Motor Relay Circuit

DESCRIPTION

The ABS motor relay supplies power to the ABS pump motor. While the ABS is activated, the ECU turns the motor relay on and operates the ABS pump motor.

DTC No.	DTC Detecting Condition	Trouble Area
C0273/13	When any of the following (1 to 3) is detected: 1. Pump motor voltage is 2.0 V or more for 1 sec. or more when the motor relay is off. 2. Pump motor voltage is equal to/less than the IG1 terminal voltage minus 4.0 V for 0.1 second or more when the motor relay is on. 3. Pump motor slows down irregularly after the motor relay turns off.	• Brake actuator assembly (motor relay) • ABS/VSC No.1 fuse • Wire harness (+BM circuit)

WIRING DIAGRAM

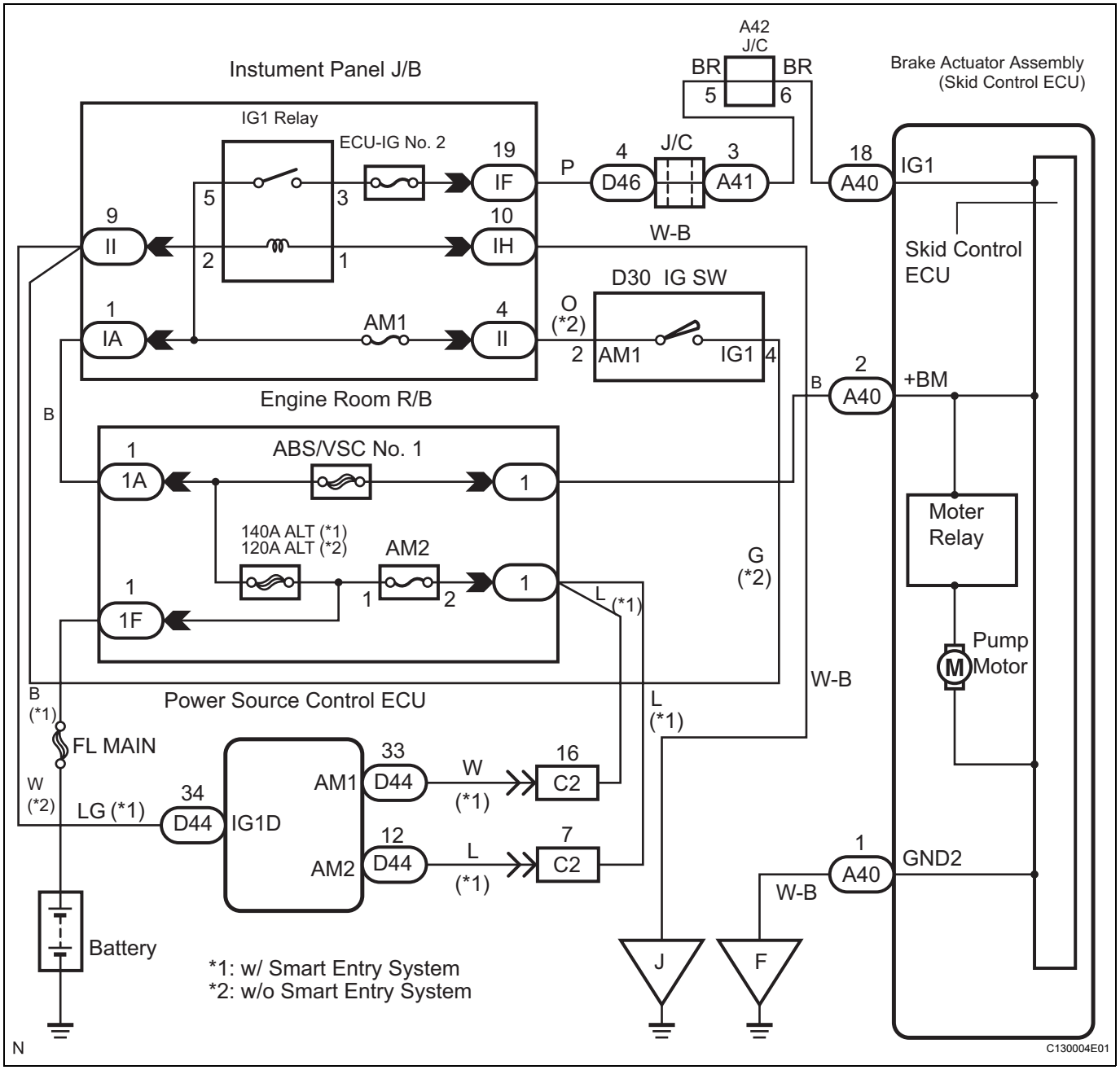

INSPECTION PROCEDURE

BC

HINT:

When C1241/41 is output together with C0273/13, inspect and repair the trouble areas indicated by C1241/41.

1	INSPECT FUSE (ABS/VSC NO.1 FUSE)

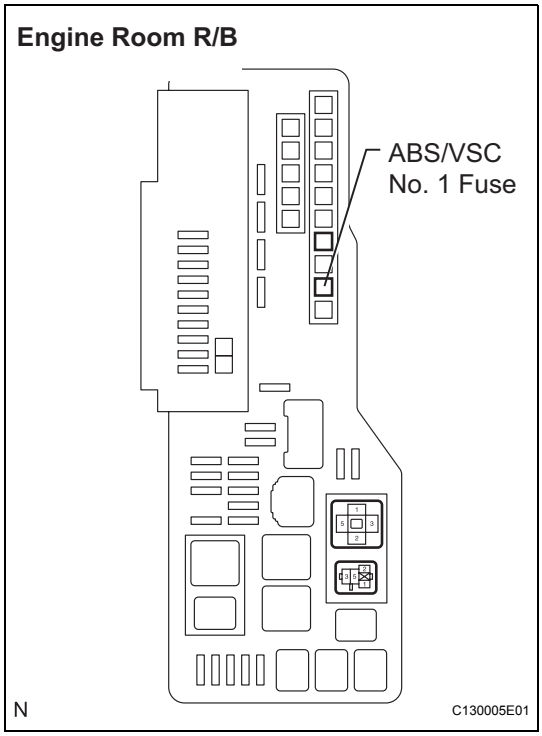

(a) Remove the ABS/VSC No.1 fuse from the engine room R/B.
(b) Measure the resistance according to the value(s) in the table below.

Resistance

Tester Connection	Specified Condition
ABS/VSC No.1 fuse	Below 1 Ω (Continuity)

NG → **INSPECT FOR SHORT IN ALL COMPONENTS CONNECTED TO FUSE AND REPAIR OR REPLACE THEM IF NEEDED, AND REPLACE FUSE**

OK

2	INSPECT SKID CONTROL ECU CONNECTOR (+BM TERMINAL VOLTAGE)

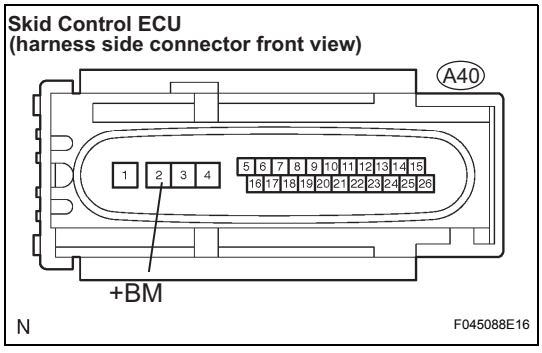

(a) Disconnect the skid control ECU connector.
(b) Measure the voltage according to the value(s) in the table below.

Voltage

Tester Connection	Condition	Specified Condition
A40-2 (+BM) - Body ground	Always	10 to 14V

NG → **REPAIR OR REPLACE HARNESS OR CONNECTOR (+BM CIRCUIT)**

OK

BC

3	INSPECT SKID CONTROL ECU CONNECTOR (GND TERMINAL CONTINUITY)

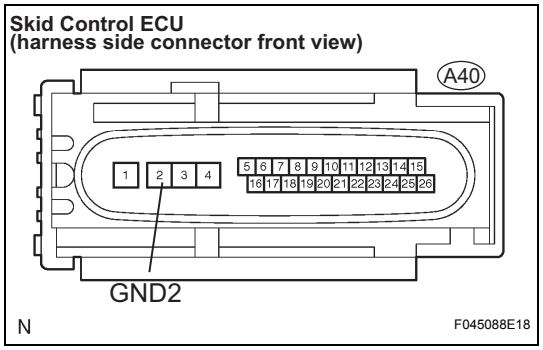

(a) Disconnect the skid control ECU connector.
(b) Measure the resistance according to the value(s) in the table below.

Resistance

Tester Connection	Specified Condition
A40-1 (GND2) - Body ground	Below 1 Ω

NG → **REPAIR OR REPLACE HARNESS OR CONNECTOR (GND2 CIRCUIT)**

OK

4	PERFORM ACTIVE TEST USING INTELLIGENT TESTER (ABS MOTOR RELAY)

(a) Connect the intelligent tester to the DLC3.
(b) Start the engine.
(c) Select "ACTIVE TEST" on the intelligent tester.

ACTIVE TEST: ABS

Item	Vehicle Condition / Test Details	Diagnostic Note
ABS MTR RELAY	Turns ABS motor relay ON / OFF	Operating sound of motor is heard

(d) Check the operating sound of the ABS motor relay when operating it with the intelligent tester.

OK:

The operating sound of the ABS motor relay should be heard.

NG → **REPLACE BRAKE ACTUATOR ASSEMBLY**

OK

5	RECONFIRM DTC

HINT:
This code is detected when a problem is identified in the brake actuator assembly.
The ABS motor relay is in the brake actuator assembly. Therefore, ABS motor relay inspection and motor relay unit inspection cannot be performed. Be sure to check if the DTC is output before replacing the brake actuator assembly.

(a) Clear the DTC.
(b) Start the engine.
(c) Drive the vehicle at the speed of 12 mph (20 km/h) or more for 30 seconds or more.
(d) Check that the same DTC is recorded.

Result

Result	Proceed to
DTC is not output	A
DTC is output	B

BC

HINT:

- If the normal system code is output (the malfunction code is not output), slightly jiggle the connectors, wire harnesses, and fuses of the brake actuator assembly. Make sure that no DTCs are output.
- If any DTCs are output while jiggling a connector or wire harness of the brake actuator (skid control ECU), inspect and repair the connector or wire harness.
- These DTCs may be stored due to a malfunction in the connector terminal connection, etc.

B → **REPLACE BRAKE ACTUATOR ASSEMBLY**

A

END

DTC	C0278/11	Open in ABS Solenoid Relay Circuit

DESCRIPTION

This solenoid relay supplies power to each ABS solenoid. If the ABS initial check is OK after the ignition switch is turned on (IG), the skid control ECU will turn the ABS solenoid relay on.
HINT:
(Initial Check)
If a speed signal of 4 mph (6km/h) or more is input to the skid control ECU, with the ignition switch on and the stop light switch off, the ECU performs self diagnosis of the motor and solenoid circuits.

DTC No.	DTC Detecting Condition	Trouble Area
C0278/11	When any of the following (1 to 3) is detected: 1. Internal circuit malfunction in the skid control ECU. 2. Solenoid relay voltage is 80% of IG voltage or less for 0.5 sec. 3. Solenoid relay voltage is high when the solenoid relay is off.	• Brake actuator assembly (solenoid relay) • ABS/VSC No.2 fuse • Wire harness (+BS circuit)

WIRING DIAGRAM

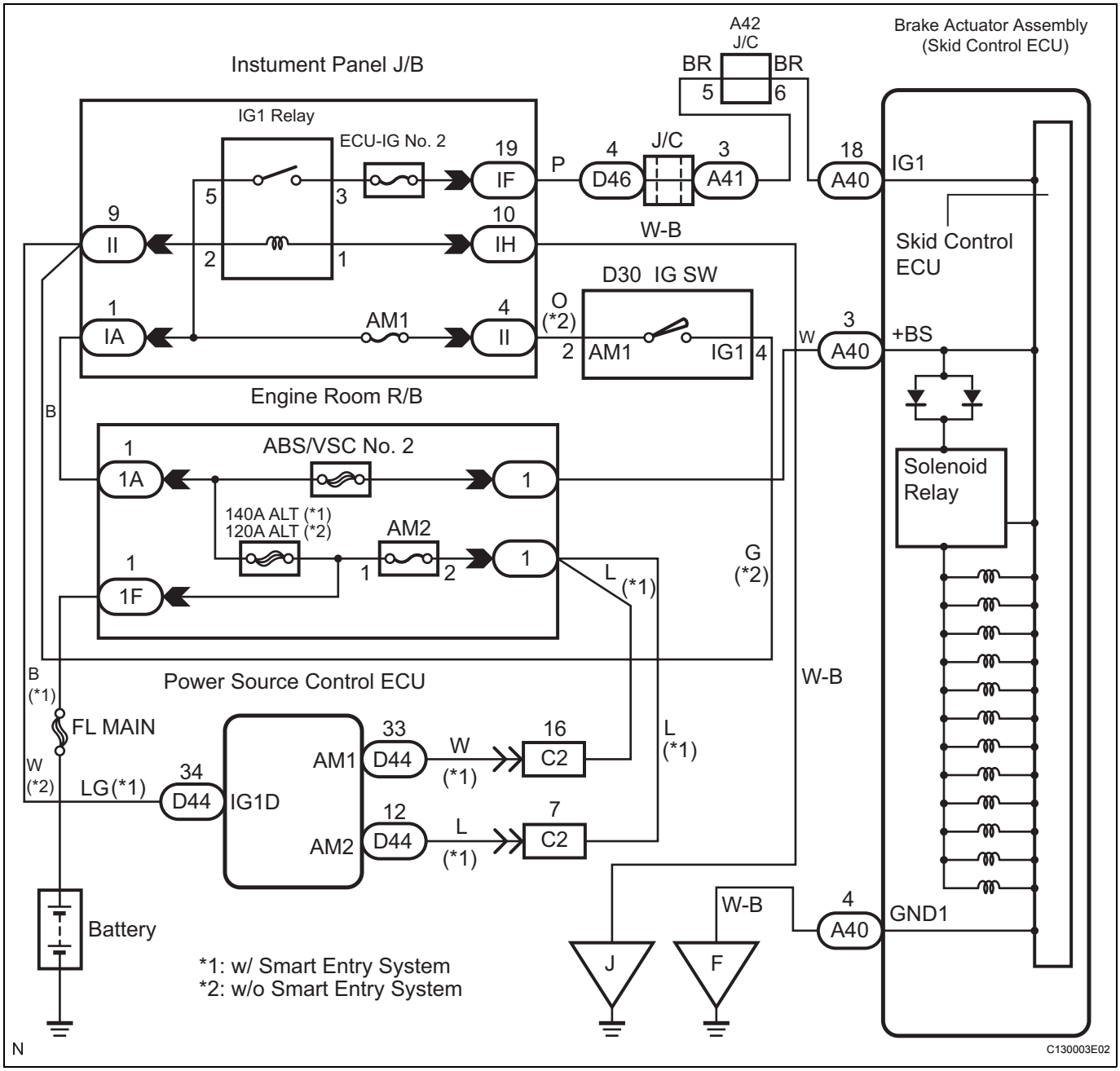

BC INSPECTION PROCEDURE

HINT:
When C1241/41 is output together with C0278/11, inspect and repair the trouble areas indicated by C1241/41.

1 INSPECT FUSE (ABS/VSC No.2 FUSE)

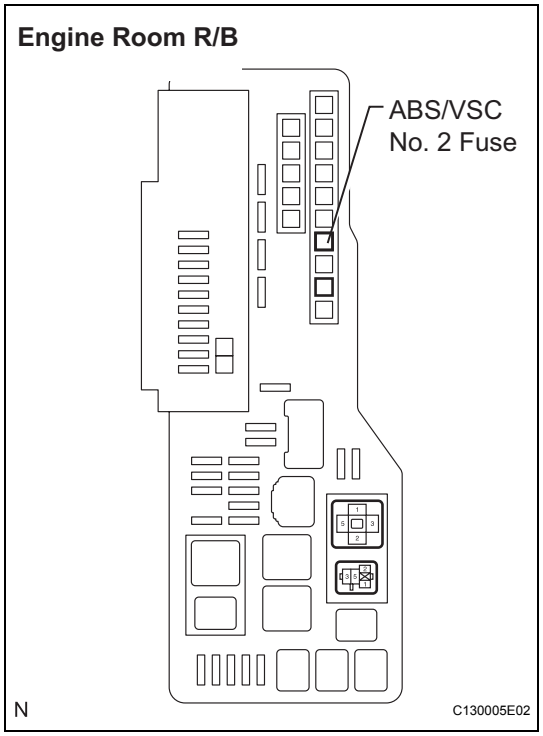

(a) Remove the ABS/VSC No.2 fuse from the engine room R/B.
(b) Measure the resistance according to the value(s) in the table below.

Resistance

Tester Connection	Specified Condition
ABS/VSC No.2 fuse	Below 1 Ω (Continuity)

NG → **INSPECT FOR SHORT IN ALL COMPONENTS CONNECTED TO FUSE AND REPAIR OR REPLACE THEM IF NEEDED, AND REPLACE FUSE**

OK

2 INSPECT SKID CONTROL ECU CONNECTOR (+BS TERMINAL VOLTAGE)

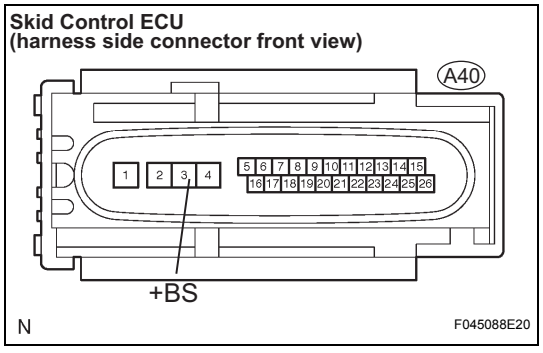

(a) Disconnect the skid control ECU connector.
(b) Measure the voltage according to the value(s) in the table below.

Voltage

Tester Connection	Condition	Specified Condition
A40-3 (+BS) - Body ground	Always	10 to 14 V

NG → **REPAIR OR REPLACE HARNESS OR CONNECTOR (+BS CIRCUIT)**

OK

BC

3	INSPECT SKID CONTROL ECU CONNECTOR (GND TERMINAL CONTINUITY)

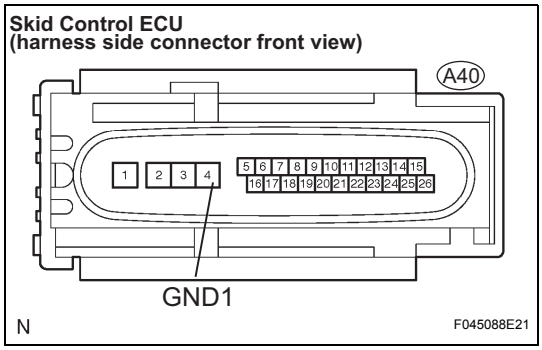

(a) Disconnect the skid control ECU connector.
(b) Measure the resistance according to the value(s) in the table below.

Resistance

Tester Connection	Specified Condition
A40-4 (GND1) - Body ground	Below 1 Ω

NG → **REPAIR OR REPLACE HARNESS OR CONNECTOR (GND1 CIRCUIT)**

OK

4	RECONFIRM DTC

HINT:
This codes is detected when a problem is identified in the brake actuator assembly.
The solenoid circuit is in the brake actuator assembly. Therefore, solenoid circuit inspection and solenoid unit inspection cannot be performed. Be sure to check if the DTC code is output before replacing the brake actuator assembly.
(a) Clear the DTC.
(b) Start the engine.
(c) Drive the vehicle at the speed of 12 mph (20 km/h) or more for 30 seconds or more.
(d) Check that the same DTC is recorded.

Result

Result	Proceed to
DTC is not output	A
DTC is output	B

HINT:
- If the normal system code is output (the malfunction code is not output), slightly jiggle the connectors, wire harnesses, and fuses of the brake actuator assembly. Make sure that no DTCs are output.
- If any DTCs are output while jiggling a connector or wire harness of the brake actuator (skid control ECU), inspect and repair the connector or wire harness.
- These DTCs may be stored due to a malfunction in the connector terminal connection, etc.

B → **REPLACE BRAKE ACTUATOR ASSEMBLY**

A

END

BC

DTC	C1237/37	Speed Sensor Rotor Faulty

DESCRIPTION

This code is output when a difference in tire size, foreign matter attached to a speed sensor tip or a sensor rotor, or a missing rotor serration is detected.
This code may be output when a malfunction in the terminal of the speed sensor circuit connector or wire harness is detected.

DTC No.	DTC Detecting Condition	Trouble Area
C1237/37	When any of the following (1 to 3) is detected: 1. Wheel speed difference between the wheels. 2. Wheel sensor signal failure. 3. Continuous ABS control for 60 sec. or more.	• Brake actuator assembly (skid control ECU) • Speed sensor rotor (Front) • Rear axle hub & bearing assembly • Speed sensor • Speed sensor circuit • Tire & wheel size • Tire deformation

INSPECTION PROCEDURE

1	INSPECT TIRE

(a) Check the size and condition of all 4 tires.
HINT:
This DTC is output when tire deformation or a difference in tire size is detected.
OK:
The diameter of all 4 tires and air pressure are the same.

NG → **REPLACE TIRES SO THAT ALL 4 TIRES ARE SAME IN SIZE**

OK

2	INSPECT SPEED SENSOR AND SENSOR ROTOR SERRATIONS

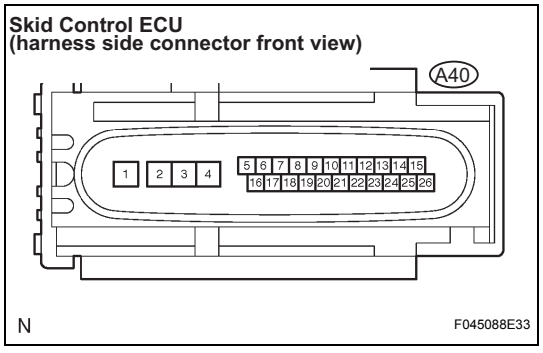

(a) INSPECTION USING OSCILLOSCOPE
(1) Disconnect the skid control ECU connector.
(2) Connect the oscilloscope to each speed sensor terminal of the skid control ECU connector.

Connector	Circuit
A40-5 (FL+) - A40-6 (FL-)	Front left speed sensor
A40-10 (FR+) - A40-9 (FR-)	Front right speed sensor
A40-7 (RL+) - A40-17 (RL-)	Rear left speed sensor
A40-19 (RR+) - A40-8 (RR-)	Rear right speed sensor

BC

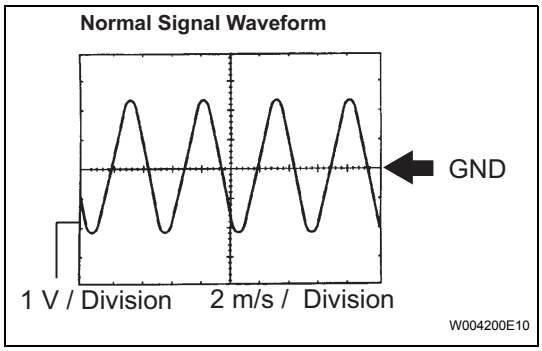

(3) Check that a waveform is output when the tires are rotated (by the sensor circuit).
OK:
A waveform as shown in the figure should be output.
HINT:
- Each sensor circuit outputs the same waveform without noise.
- As vehicle speed (wheel rotation speed) increases, the width of the waveform narrows and the fluctuation in the output voltage becomes greater.
- When noise is identified in the waveform on the oscilloscope, error signals are generated due to rotor scratches, looseness or foreign matter attached to the speed sensor.

(4) Make sure that the waveform does not change while jiggling a connector or a wire harness.
OK:
The waveform does not change.
HINT:
If the waveform changes while jiggling a connector or a wire harness, there may be a malfunction in the connector on the wire harness.

Result

Result	Proceed to
OK	A
NG (waveform changes while jiggling a connector or a wire harness)	B
NG (waveform does not change while jiggling a connector or a wire harness)	C

B → **REPAIR OR REPLACE HARNESS OR CONNECTOR (SKID CONTROL ECU TO SPEED SENSOR)**

C → **CHECK OR REPLACE SPEED SENSOR AND SENSOR ROTOR**

A

BC

3	RECONFIRM DTC

(a) Clear the DTC.
(b) Start the engine.
(c) Drive the vehicle at the speed of 20 mph (32 km/h) or more for 60 seconds or more.
(d) Check that the same DTC is recorded.

Result

Result	Proceed to
DTC is not output	A
DTC is output	B

B → **REPLACE BRAKE ACTUATOR ASSEMBLY**

A

END

DTC	C1241/41	Low Battery Positive Voltage or Abnormally High Battery Positive Voltage

DESCRIPTION

If a malfunction is detected in the power supply circuit of the brake actuator assembly (skid control ECU), the skid control ECU (housed in the actuator assembly) outputs the DTC and prohibits operation with the fail-safe function.
This DTC is output when the IG1 terminal voltage deviates from the DTC detecting condition due to a malfunction in the power supply or charging circuit such as the battery or alternator circuit, etc.
This DTC is cancelled when the IG1 terminal voltage returns to normal (only when the voltage returns to normal from a voltage lower than the specified value).

DTC No.	DTC Detecting Condition	Trouble Area
C1241/41	When either of the following (1 or 2) is detected: 1. When the vehicle speed is 4 mph (6 km/h) or more, battery voltage is 9.4 V or less with the ABS operating or 9.2 V or less with the ABS not operating. 2. IG terminal voltage is 16.9 V or more.	• Battery • Charging system • Power source circuit

WIRING DIAGRAM

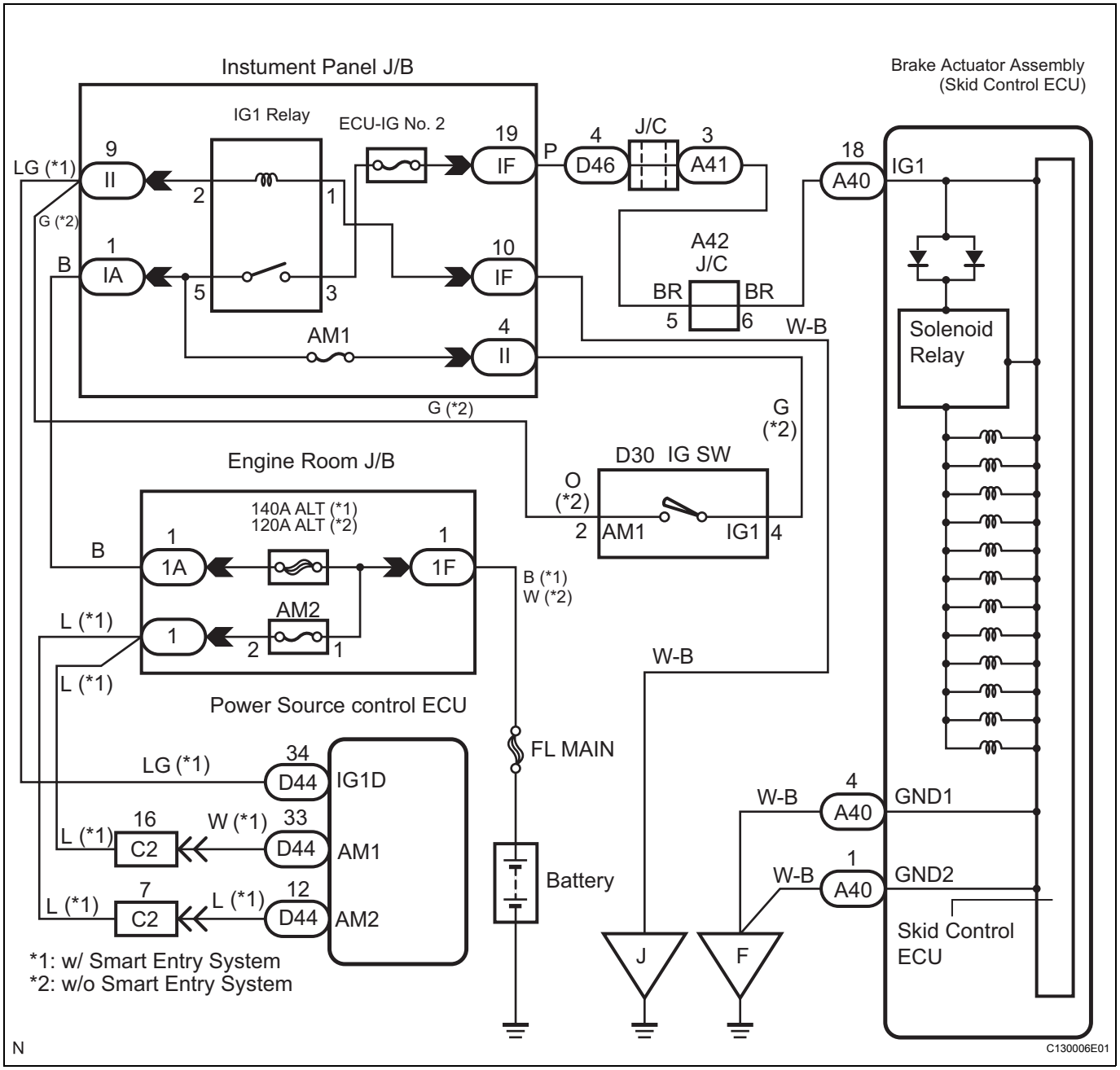

BC

INSPECTION PROCEDURE

1 **INSPECT FUSE (ECU-IG NO.2 FUSE)**

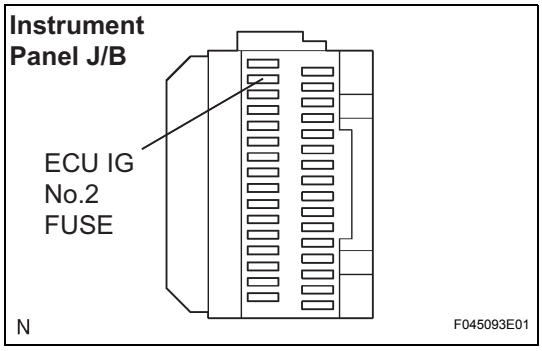

(a) Remove the ECU-IG No.2 fuse from the instrument panel J/B.
(b) Measure the resistance according to the value(s) in the table below.

Resistance

Tester Connection	Specified Condition
ECU-IG No.2 fuse	Below 1 Ω (Continuity)

NG → **INSPECT FOR SHORT IN ALL COMPONENTS CONNECTED TO FUSE AND REPAIR OR REPLACE THEM IF NEEDED, AND REPLACE FUSE**

OK

2 **INSPECT BATTERY**

(a) Check the battery voltage.
Voltage:
11 to 14 V

NG → **INSPECT CHARGING SYSTEM**

OK

3 **INSPECT SKID CONTROL ECU CONNECTOR (IG1 TERMINAL VOLTAGE)**

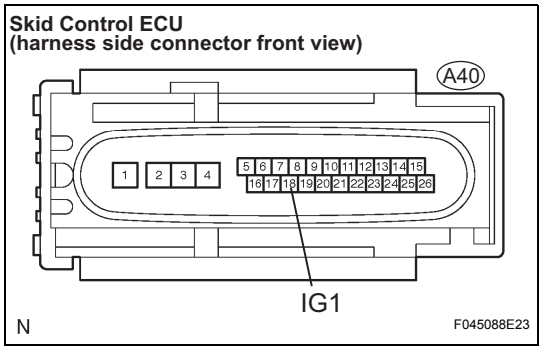

(a) Disconnect the skid control ECU connector.
(b) Turn the ignition switch on (IG).
(c) Measure the voltage according to the value(s) in the table below.

Voltage

Tester Connection	Condition	Specified Condition
A40-18 (IG1) - Body ground	Ignition switch on (IG)	10 to 14 V

NG → **REPAIR OR REPLACE HARNESS OR CONNECTOR (IG1 CIRCUIT)**

OK

BC

4 INSPECT SKID CONTROL ECU CONNECTOR (GND TERMINAL CONTINUITY)

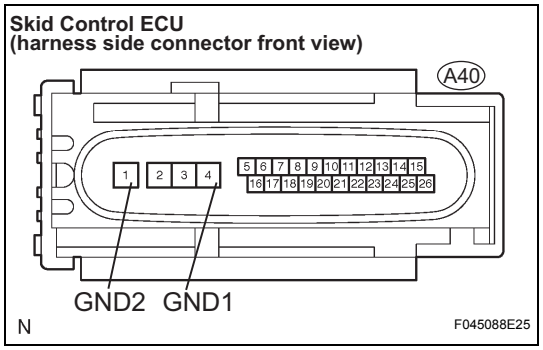

(a) Disconnect the skid control ECU connector.
(b) Measure the resistance according to the value(s) in the table below.

Resistance

Tester Connection	Specified Condition
A40-4 (GND1) - Body ground	Below 1 Ω
A40-1 (GND2) - Body ground	Below 1 Ω

NG → **REPAIR OR REPLACE HARNESS OR CONNECTOR (GND CIRCUIT)**

OK

5 READ VALUE OF INTELLIGENT TESTER (IG VOLTAGE)

(a) Connect the intelligent tester to the DLC3.
(b) Start the engine.
(c) Select "DATA LIST" on the intelligent tester.

DATA LIST: ABS

Item	Measurement Item / Range (Display)	Normal condition
IG VOLTAGE	ECU power supply voltage / TOO LOW / NORMAL / TOO HIGH	TOO HIGH: 14.0 V or over NORMAL: 9.5 V to 14.0 V TOO LOW: Below 9.5 V

(d) Read the voltage condition output from the ECU displayed on the intelligent tester.
OK:
"NORMAL" is displayed.
HINT:
If troubleshooting has been carried out according to the PROBLEM SYMPTOMS TABLE, refer back to the table and proceed to the next step before replacing the part (See page BC-15).

NG → **REPLACE BRAKE ACTUATOR ASSEMBLY**

OK

BC

END

DTC	C1249/58	Stop Light Switch Circuit

DESCRIPTION

This circuit recognizes brake operation by sending a stop light signal to the skid control ECU.
The skid control ECU has an open detection circuit, which outputs this DTC when detecting an open in the stop light signal input line (STP terminal) or the ground line of the stop light circuit with the stop light switch OFF (brake pedal not depressed).

DTC No.	DTC Detecting Condition	Trouble Area
D1249/58	With the stop light switch OFF (brake pedal not depressed), the power supply voltage of the stop light switch is 40 % to 67 % of the battery voltage.	• Stop light switch • Stop light switch circuit

WIRING DIAGRAM

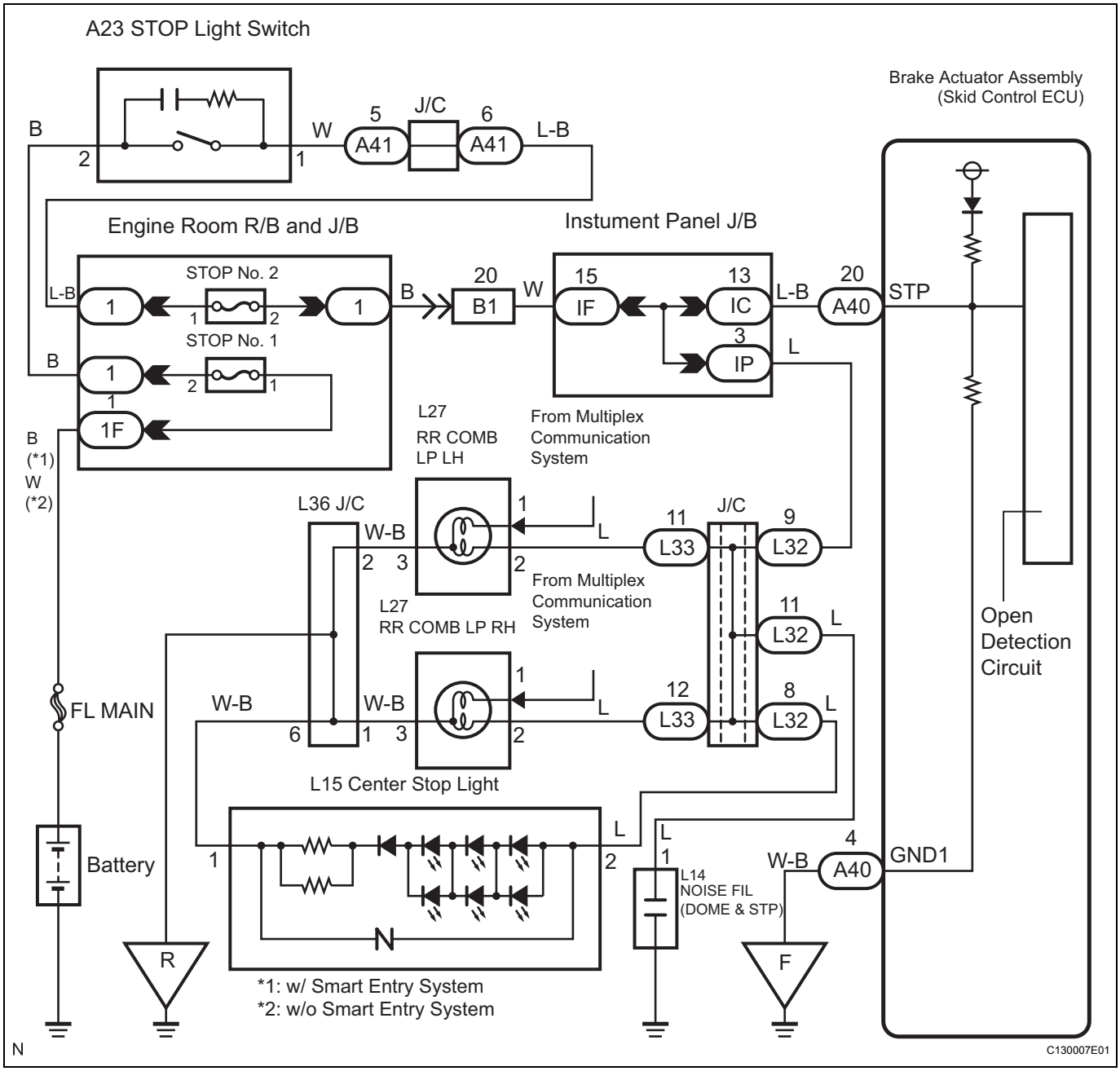

BC

INSPECTION PROCEDURE

1	CHECK STOP LIGHT SWITCH OPERATION (STOP LIGHT SWITCH CIRCUIT)

(a) Check that the stop light comes on when the brake pedal is depressed and goes off when the brake pedal is released.

OK

Pedal Condition	Illumination Condition
Brake pedal depressed	ON
Brake pedal released	OFF

NG → Go to step 4

OK

2	INSPECT SKID CONTROL ECU CONNECTOR (STP TERMINAL)

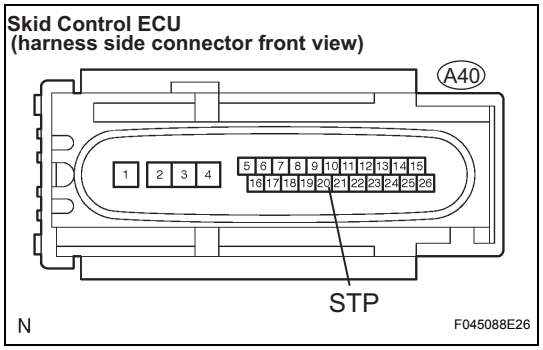

(a) Disconnect the skid control ECU connector.
(b) Measure the voltage according to the value(s) in the table below.

Voltage

Tester Connection	Switch Condition	Specified Condition
A40-20 (STP) - Body ground	Brake pedal depressed	8 to 14 V
A40-20 (STP) - Body ground	Brake pedal released	Below 4.0 V

NG → Go to step 6

OK

3	RECONFIRM DTC

(a) Clear the DTC.
(b) Start the engine.
(c) Depress the brake pedal several times to test the stop light circuit.
(d) Check that the same DTC is recorded.
HINT:
Reinstall the sensors, connectors, etc. and restore the vehicle to its prior condition before rechecking for DTCs.

Result

Result	Proceed to
DTC is not output	A
DTC is output	B

B → REPLACE BRAKE ACTUATOR ASSEMBLY

BC

A

END

4 INSPECT STOP LIGHT SWITCH ASSEMBLY (POWER SOURCE TERMINAL VOLTAGE)

Stop Light Switch
(harness side connector front view)

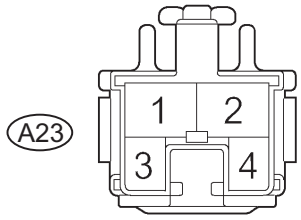

I042363E05

(a) Disconnect the stop light switch connector.
(b) Measure the voltage according to the value(s) in the table below.

Voltage

Tester Connection	Condition	Specified Condition
A23-2 - Body ground	Always	10 to 14 V

NG → **REPAIR OR REPLACE HARNESS OR CONNECTOR (POWER SOURCE CIRCUIT)**

OK

5 INSPECT STOP LIGHT SWITCH ASSEMBLY

Stop Light Switch Assembly

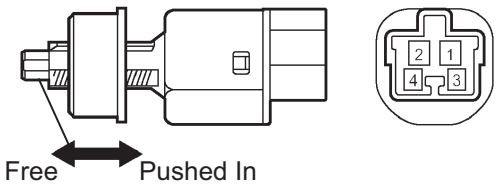

H

F047752E01

(a) Disconnect the stop light switch assembly connector.
(b) Measure the resistance according to the value(s) in the table below.

Resistance

Switch Condition	Tester Connection	Specified Condition
Switch pin free	1 - 2	Below 1 Ω
Switch pin pushed in	1 - 2	10 kΩ or higher

NG → **REPLACE STOP LIGHT SWITCH ASSEMBLY**

OK

6	CHECK HARNESS AND CONNECTOR (STOP LIGHT SWITCH TO SKID CONTROL ECU)

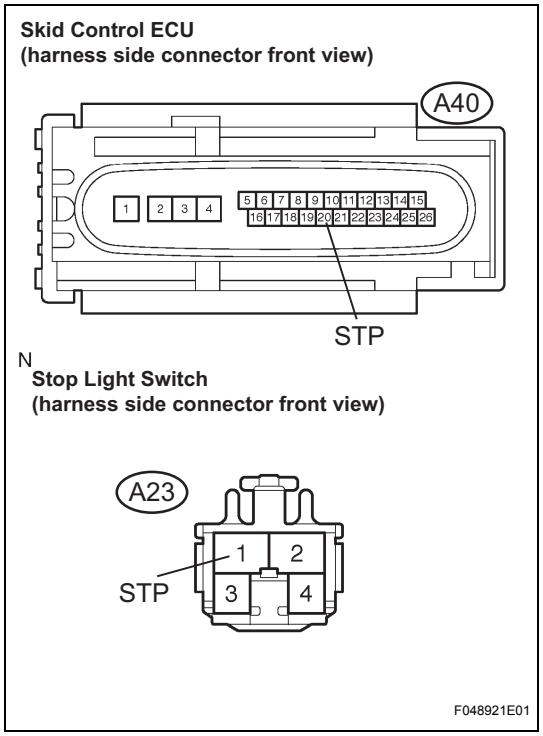

(a) Disconnect the stop light switch connector and skid control ECU connector.
(b) Measure the resistance according to the value(s) in the table below.

Resistance

Tester Connection	Specified Condition
A40-20 (STP) - A23-1 (STP)	Below 1 Ω

NG → **REPAIR OR REPLACE HARNESS OR CONNECTOR (STOP LIGHT SWITCH TO SKID CONTROL ECU)**

OK

REPAIR OR REPLACE HARNESS OR CONNECTOR (STOP LIGHT CIRCUIT)

DTC C1300/62 Skid Control ECU Malfunction

DESCRIPTION

DTC No.	DTC Detecting Condition	Trouble Area
C1300/62	Internal failure of the skid control ECU control unit.	Brake actuator assembly (skid control ECU)

INSPECTION PROCEDURE

1 CHECK DTC

(a) Check DTC.

Result

Result	Proceed to
DTC C1300/62 is output (only C1300/62)	A
Other DTC is output	B

B → **REPAIR CIRCUIT INDICATED BY OUTPUT DTC**

A

2 INSPECT SKID CONTROL ECU CONNECTOR (IG1 TERMINAL VOLTAGE)

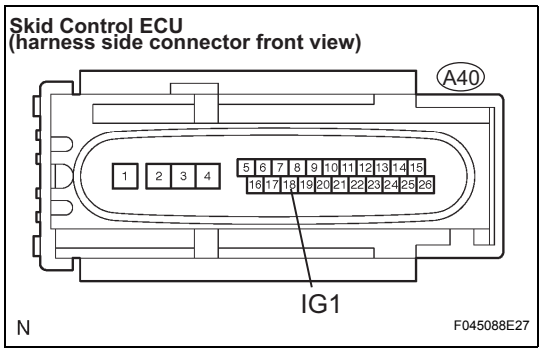

(a) Disconnect the skid control ECU connector.
(b) Turn the ignition switch on (IG).
(c) Measure the voltage according to the value(s) in the table below.

Voltage

Tester Connection	Condition	Specified Condition
A40-18 (IG1) - Body ground	Ignition switch on (IG)	10 to 14 V

NG → **REPAIR OR REPLACE HARNESS OR CONNECTOR (IG1 CIRCUIT)**

OK

3 INSPECT SKID CONTROL ECU CONNECTOR (GND TERMINAL CONTINUITY)

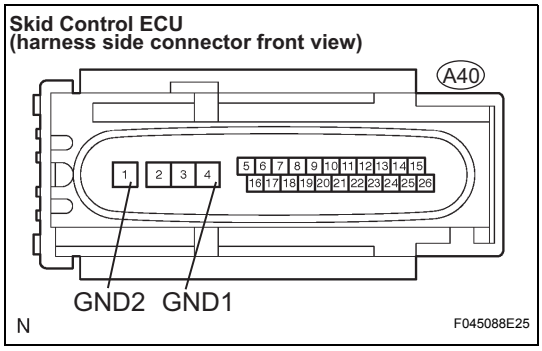

(a) Disconnect the skid control ECU connector.
(b) Measure the resistance according to the value(s) in the table below.

Resistance

Tester Connection	Specified Condition
A40-4 (GND1) - Body ground	Below 1 Ω
A40-1 (GND2) - Body ground	Below 1 Ω

NG → **CHECK AND REPAIR HARNESS AND CONNECTOR (GND CIRCUIT)**

BC

OK

4	READ VALUE OF INTELLIGENT TESTER (IG VOLTAGE)

(a) Connect the intelligent tester to the DLC3.
(b) Start the engine.
(c) Select "DATA LIST" on the intelligent tester.

DATA LIST: ABS

Item	Measurement Item / Range (Display)	Normal condition
IG VOLTAGE	ECU power supply voltage / TOO LOW / NORMAL / TOO HIGH	TOO HIGH: 14.0 V or over NORMAL: 9.5 V to 14.0 V TOO LOW: Below 9.5 V

(d) Read the voltage condition output from the ECU displayed on the intelligent tester.
OK:
"NORMAL" is displayed.

NG → **REPLACE BRAKE ACTUATOR ASSEMBLY**

OK

END

DTC	C1301/42	CAN Communication System Malfunction

INSPECTION PROCEDURE

See page CA-7.

ABS Warning Light Remains ON

If the ABS warning light remains on when reading DTCs by SST (CHECK WIRE), troubleshoot by following the inspection flow.

DESCRIPTION

If any of the following is detected, the ABS warning light will remain on:
1. The skid control ECU connectors are disconnected from the skid control ECU.
2. There is a malfunction in the skid control ECU internal circuit.

HINT:
The intelligent tester may not be used when there is a malfunction in the skid control ECU.

WIRING DIAGRAM

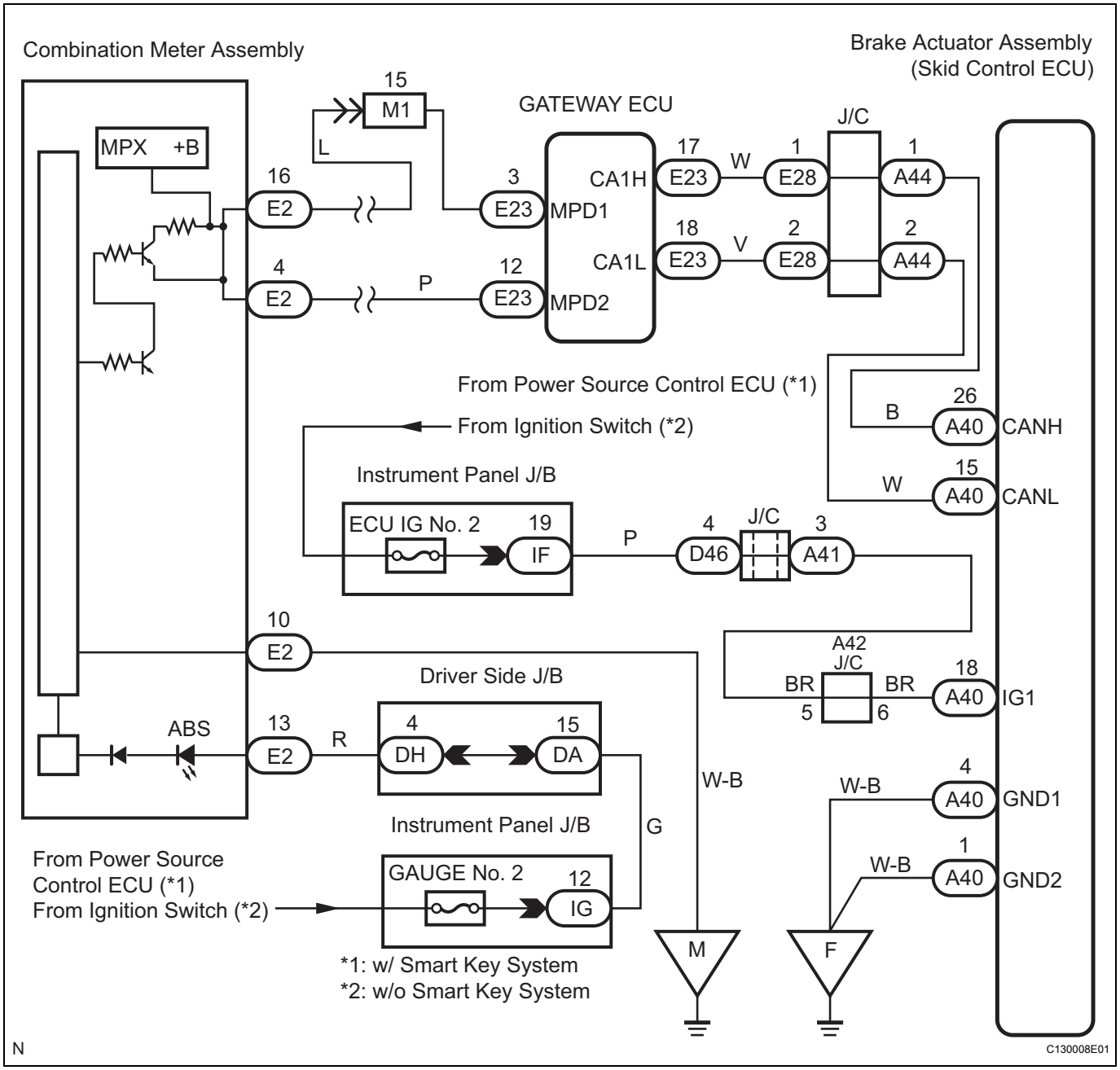

BC

INSPECTION PROCEDURE

1	INSPECT CAN COMMUNICATION SYSTEM

(a) Check if the CAN communication system DTC is output (See page CA-15).

Result

Result	Proceed to
DTC is not output	A
DTC is output	B

B → REPAIR CAN COMMUNICATION SYSTEM

A

2	INSPECT MULTIPLEX COMMUNICATION SYSTEM

(a) Check if the multiplex communication system DTC is output (See page MP-23).

Result

Result	Proceed to
DTC is not output	A
DTC is output	B

B → REPAIR MULTIPLEX COMMUNICATION SYSTEM

A

3	INSPECT IF SKID CONTROL ECU CONNECTOR IS SECURELY CONNECTED

(a) Check if the skid control ECU connector is connected.
OK:
The connector should be securely connected.

NG → CONNECT CONNECTOR TO ECU CORRECTLY

BC

OK

4	INSPECT BATTERY

(a) Check the battery voltage.
Voltage:
11 to 14 V

NG → INSPECT CHARGING SYSTEM

OK

5 INSPECT SKID CONTROL ECU CONNECTOR (IG1 TERMINAL VOLTAGE)

(a) WHEN USING INTELLIGENT TESTER
(1) Connect the intelligent tester to the DLC3.
(2) Start the engine.
(3) Select "DATA LIST" on the intelligent tester.

DATA LIST: ABS

Item	Measurement Item / Range (Display)	Normal Condition
IG VOLTAGE	ECU power supply voltage / TOO LOW / NORMAL / TOO HIGH	TOO HIGH: 14.0 or over NORMAL: 9.5 V to 14.0 V TOO LOW: Below 9.5 V

(4) Read the voltage condition output from the skid control ECU displayed on the intelligent tester.

OK:
"NORMAL" is displayed.

(b) WHEN NOT USING INTELLIGENT TESTER
(1) Disconnect the skid control ECU connector.
(2) Turn the ignition switch on (IG).
(3) Measure the voltage according to the value(s) in the table below.

Voltage

Tester Connection	Condition	Specified Condition
A40-18 (IG1) - Body ground	Ignition switch on (IG)	10 to 14 V

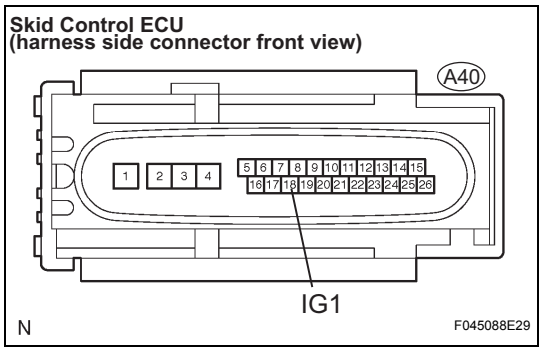

NG → **REPAIR OR REPLACE HARNESS OR CONNECTOR (IG1 CIRCUIT)**

OK

6 INSPECT SKID CONTROL ECU CONNECTOR (GND TERMINAL CONTINUITY)

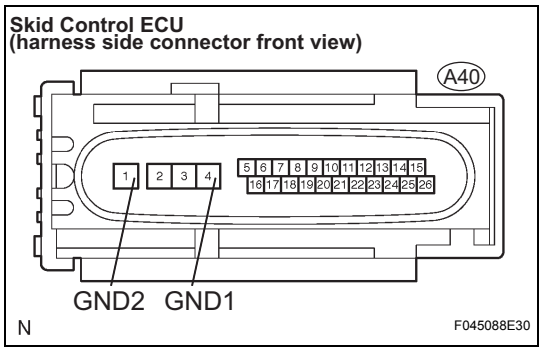

(a) Disconnect the skid control ECU connector.
(b) Measure the resistance according to the value(s) in the table below.

Resistance

Tester Connection	Specified Condition
A40-4 (GND1) - Body ground	Below 1 Ω
A40-1 (GND2) - Body ground	Below 1 Ω

NG → **REPAIR OR REPLACE HARNESS OR CONNECTOR (GND CIRCUIT)**

OK

7 INSPECT COMBINATION METER ASSEMBLY

(a) Check the combination meter assembly (See page ME-13).

BC

HINT:
If troubleshooting has been carried out according to the PROBLEM SYMPTOMS TABLE, refer back to the table and proceed to the next step before replacing the part (See page BC-15).

NG → **REPLACE COMBINATION METER ASSEMBLY**

OK

REPLACE BRAKE ACTUATOR ASSEMBLY

ABS Warning Light does not Come ON

WIRING DIAGRAM

(See page BC-67).

INSPECTION PROCEDURE

1	INSPECT ABS WARNING LIGHT

HINT:
When disconnecting the skid control ECU connector, the ABS warning light comes on.

(a) Turn the ignition switch off.
(b) Disconnect the skid control ECU connector.
(c) Turn the ignition switch on (IG).
(d) Check that the ABS warning light comes on.

OK:

The ABS warning light comes on.

HINT:
If troubleshooting has been carried out according to the PROBLEM SYMPTOMS TABLE, refer back to the table and proceed to the next step before replacing the part (See page BC-15).

NG → **Go to step 2**

OK →

REPLACE BRAKE ACTUATOR ASSEMBLY

2	INSPECT CAN COMMUNICATION SYSTEM

(a) Check if the CAN communication system DTC is output (See page CA-15).

Result

Result	Proceed to
DTC is not output	A
DTC is output	B

B → **REPAIR CAN COMMUNICATION SYSTEM**

A →

3	INSPECT MULTIPLEX COMMUNICATION SYSTEM

(a) Check if the multiplex communication system DTC is output (See page MP-23).

BC

Result

Result	Proceed to
DTC is not output	A
DTC is output	B

B → **REPAIR MULTIPLEX COMMUNICATION SYSTEM**

A

4	INSPECT COMBINATION METER ASSEMBLY

(a) Check the combination meter assembly (See page ME-13).

NG → **REPLACE COMBINATION METER ASSEMBLY**

OK

END

Brake Warning Light Remains ON

DESCRIPTION

If any of the following is detected, the brake warning light remains on:

1. The skid control ECU connector is disconnected from the skid control ECU.
2. The brake fluid level is insufficient.
3. The parking brake is applied.
4. The EBD is defective.

WIRING DIAGRAM

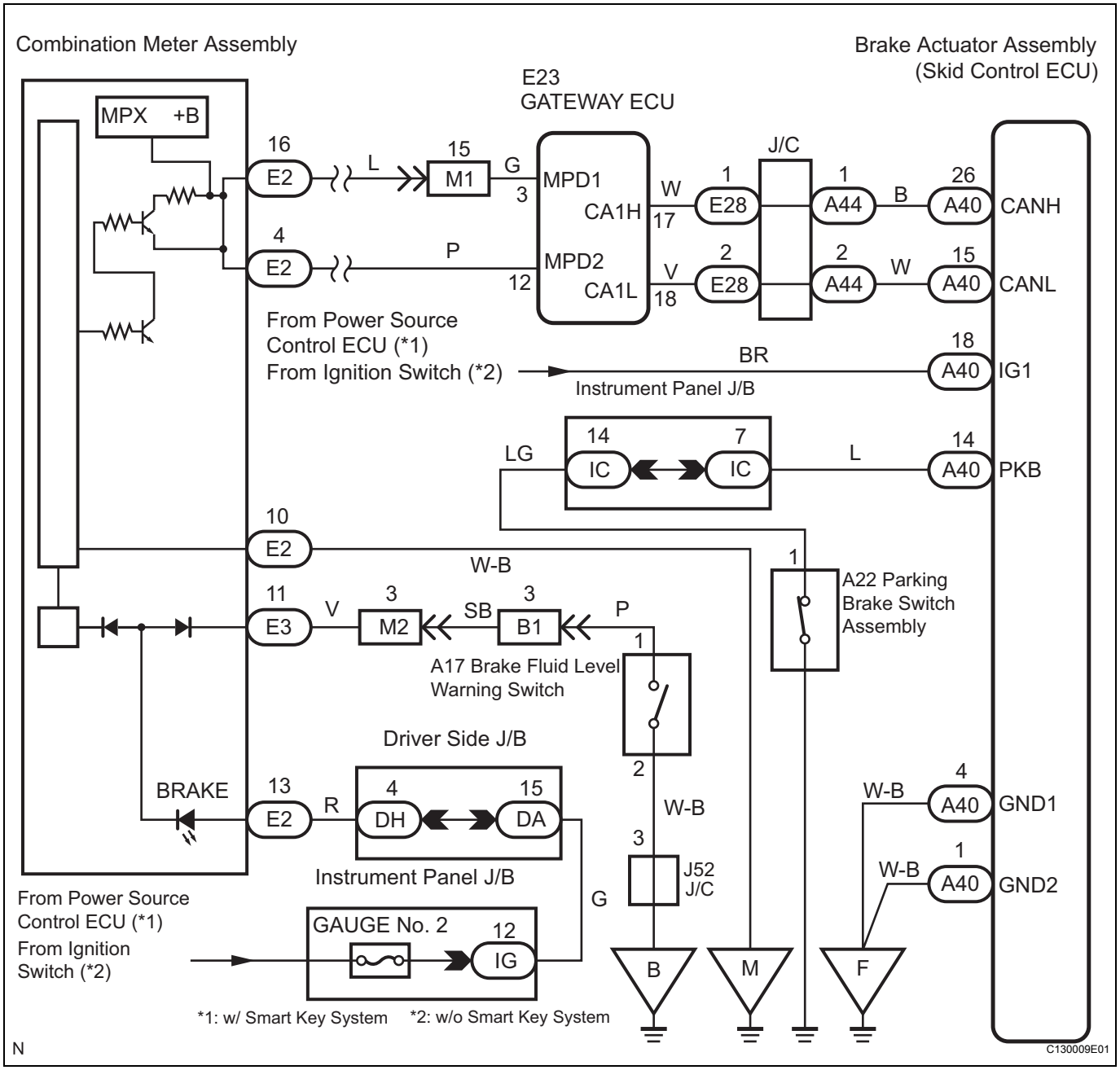

BC

INSPECTION PROCEDURE

1	CHECK DTC

(a) Check if the ABS DTC is output (See page BC-19).

Result

Result	Proceed to
DTC is not output	A
DTC is output	B

B → REPAIR CIRCUIT ACCORDING TO OUTPUT CODE

A

2	INSPECT CAN COMMUNICATION SYSTEM

(a) Check if the CAN communication system DTC is output (See page CA-15).

Result

Result	Proceed to
DTC is not output	A
DTC is output	B

B → REPAIR CAN COMMUNICATION SYSTEM

A

3	INSPECT MULTIPLEX COMMUNICATION SYSTEM

(a) Check if the multiplex communication system DTC is output (See page MP-23).

Result

Result	Proceed to
DTC is not output	A
DTC is output	B

BC

B → REPAIR MULTIPLEX COMMUNICATION SYSTEM

A

4	INSPECT IF SKID CONTROL ECU CONNECTOR IS SECURELY CONNECTED

(a) Check the skid control ECU connector's connecting condition.

OK:

The connector should be securely connected.

NG → CONNECT CONNECTOR TO ECU CORRECTLY

OK

5	INSPECT BATTERY

(a) Check the battery voltage.
Voltage:
11 to 14 V

NG → INSPECT CHARGING SYSTEM

OK

6	INSPECT SKID CONTROL ECU CONNECTOR (IG1 TERMINAL VOLTAGE)

(a) WHEN USING INTELLIGENT TESTER
(1) Connect the intelligent tester to the DLC3.
(2) Start the engine.
(3) Select "DATA LIST" on the intelligent tester.

DATA LIST: ABS

Item	Measurement Item / Range (Display)	Normal Condition
IG VOLTAGE	ECU power supply voltage / TOO LOW / NORMAL / TOO HIGH	TOO HIGH: 14.0 or over NORMAL: 9.5 V to 14.0 V TOO LOW: Below 9.5 V

(4) Read the voltage condition output from the skid control ECU displayed on the intelligent tester.

OK:
"NORMAL" is displayed.

(b) WHEN NOT USING INTELLIGENT TESTER
(1) Disconnect the skid control ECU connector.
(2) Turn the ignition switch on (IG).
(3) Measure the voltage according to the value(s) in the table below.
Voltage

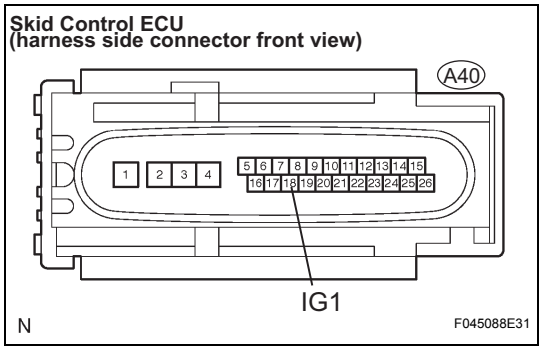

Tester Connection	Condition	Specified Condition
A40-18 (IG1) - Body ground	Ignition switch ON	10 to 14 V

NG → REPAIR OR REPLACE HARNESS OR CONNECTOR (IG1 CIRCUIT)

OK

BC

7 INSPECT SKID CONTROL ECU CONNECTOR (GND TERMINAL CONTINUITY)

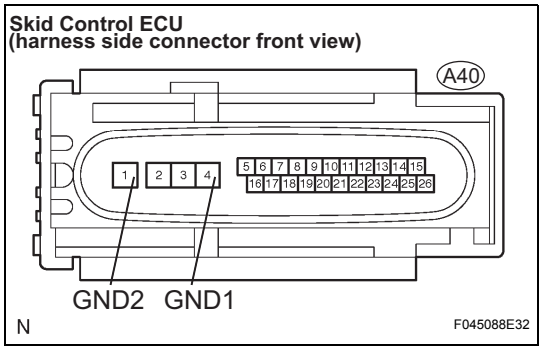

(a) Disconnect the skid control ECU connector.
(b) Measure the resistance according to the value(s) in the table below.

Resistance

Tester Connection	Specified Condition
A40-4 (GND1) - Body ground	Below 1 Ω
A40-1 (GND2) - Body ground	Below 1 Ω

NG → **REPAIR OR REPLACE HARNESS OR CONNECTOR (GND CIRCUIT)**

OK

8 INSPECT PARKING BRAKE SWITCH ASSEMBLY

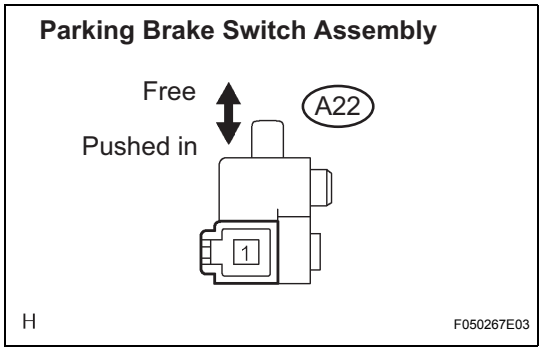

(a) Remove the parking brake switch assembly.
(b) Measure the resistance according to the value(s) in the table below.

Resistance

Tester Connection	Switch Condition	Specified Condition
(A22-1) - Ground part	Free	Below 1 Ω
(A22-1) - Ground part	Pushed in	10 kΩ or higher

NG → **REPLACE PARKING BRAKE SWITCH ASSEMBLY**

OK

9	CHECK HARNESS OR CONNECTOR (SKID CONTROL ECU TO PARKING BRAKE SWITCH ASSEMBLY)

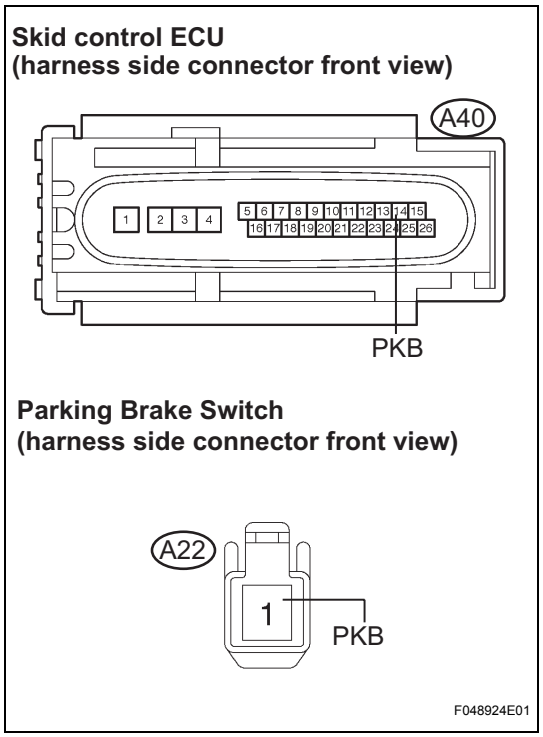

(a) Disconnect the skid control ECU connector and the parking brake switch connector.
(b) Measure the resistance according to the value(s) in the table below.

Resistance

Tester Connection	Specified Condition
A40-14 (PKB) - A22-1 (PKB)	Below 1 Ω
A40-14 (PKB) - Body ground	10 kΩor higher

NG → **REPAIR OR REPLACE HARNESS OR CONNECTOR (SKID CONTROL ECU TO PARKING BRAKE SWITCH ASSEMBLY)**

OK

10	INSPECT BRAKE FLUID LEVEL WARNING SWITCH ASSEMBLY

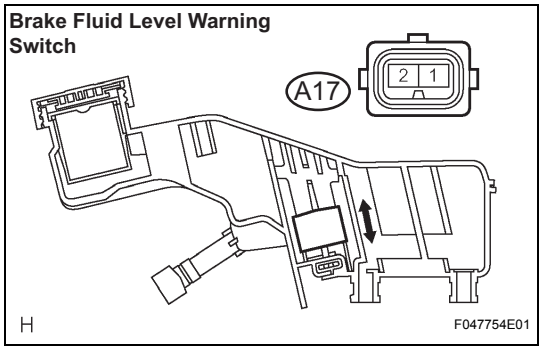

(a) Remove the reservoir tank cap.
(b) Disconnect the brake fluid level warning switch connector.
(c) Measure the resistance according to the value(s) in the table below.

Resistance

Tester Connection	Switch Condition	Specified Condition
(A17-1) - (A17-2)	Float UP	10 kΩ or higher (No Continuity)
(A17-1) - (A17-2)	Float DOWN	Below 1 Ω (Continuity)

HINT:
If there is no problem after finishing the above check, adjust the brake fluid level to the MAX level.

NG → **REPLACE BRAKE MASTER CYLINDER RESERVOIR SUB-ASSEMBLY (BRAKE FLUID LEVEL WARNING SWITCH)**

OK

BC

11	CHECK HARNESS OR CONNECTOR (BRAKE FLUID LEVEL WARNING SWITCH TO COMBINATION METER)

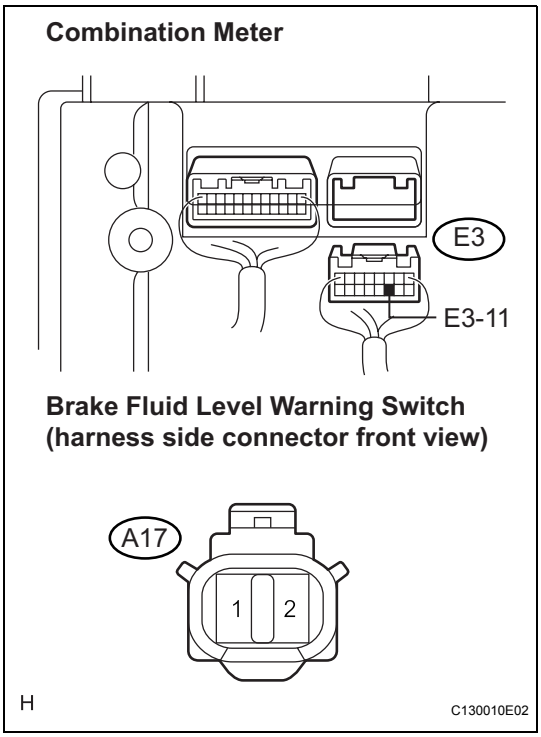

(a) Disconnect the combination meter assembly and the brake fluid level warning switch connector.
(b) Measure the resistance according to the value(s) in the table below.

Resistance

Tester Connection	Specified Condition
(E3-11) - (A17-1)	Below 1 Ω
(E3-11) - Body ground	10 kΩ or higher
(A17-2) - Body ground	Below 1 Ω

NG → **REPAIR OR REPLACE HARNESS OR CONNECTOR (BRAKE FLUID LEVEL WARNING SWITCH TO COMBINATION METER)**

OK

12	INSPECT COMBINATION METER ASSEMBLY

(a) Check the combination meter assembly (See page ME-13).

HINT:
If troubleshooting has been carried out according to the PROBLEM SYMPTOMS TABLE, refer back to the table and proceed to the next step before replacing the part (See page BC-15).

NG → **REPLACE COMBINATION METER ASSEMBLY**

OK

REPLACE BRAKE ACTUATOR ASSEMBLY

BC

Brake Warning Light does not Come ON

DESCRIPTION

(See page BC-73).

WIRING DIAGRAM

(See page BC-73).

INSPECTION PROCEDURE

1	INSPECT BRAKE WARNING LIGHT

HINT:
When disconnecting the skid control ECU connector, the brake warning light comes on.

(a) Turn the ignition switch off.
(b) Disconnect the skid control ECU connector.
(c) Turn the ignition switch on (IG).
(d) Check that the brake warning light comes on.

OK:

The brake warning light comes on.

HINT:
If troubleshooting has been carried out according to the PROBLEM SYMPTOMS TABLE, refer back to the table and proceed to the next step before replacing the part (See page BC-15).

NG → **Go to step 2**

OK

REPLACE BRAKE ACTUATOR ASSEMBLY

2	INSPECT CAN COMMUNICATION SYSTEM

(a) Check if the CAN communication system DTC is output (See page CA-15).

Result

Result	Proceed to
DTC is not output	A
DTC is output	B

B → **REPAIR CAN COMMUNICATION SYSTEM**

A

3	INSPECT MULTIPLEX COMMUNICATION SYSTEM

(a) Check if the multiplex communication system DTC is output (See page MP-23).

BC

Result

Result	Proceed to
DTC is not output	A
DTC is output	B

B → **REPAIR MULTIPLEX COMMUNICATION SYSTEM**

A

4	INSPECT COMBINATION METER ASSEMBLY

(a) Check the combination meter assembly (See page ME-13).

NG → **REPLACE COMBINATION METER ASSEMBLY**

OK

END

TC and CG Terminal Circuit

DESCRIPTION

DTC output mode is set by connecting terminals TC and CG of the DLC3.
The DTCs are displayed by the blinking pattern of the ABS warning light.

WIRING DIAGRAM

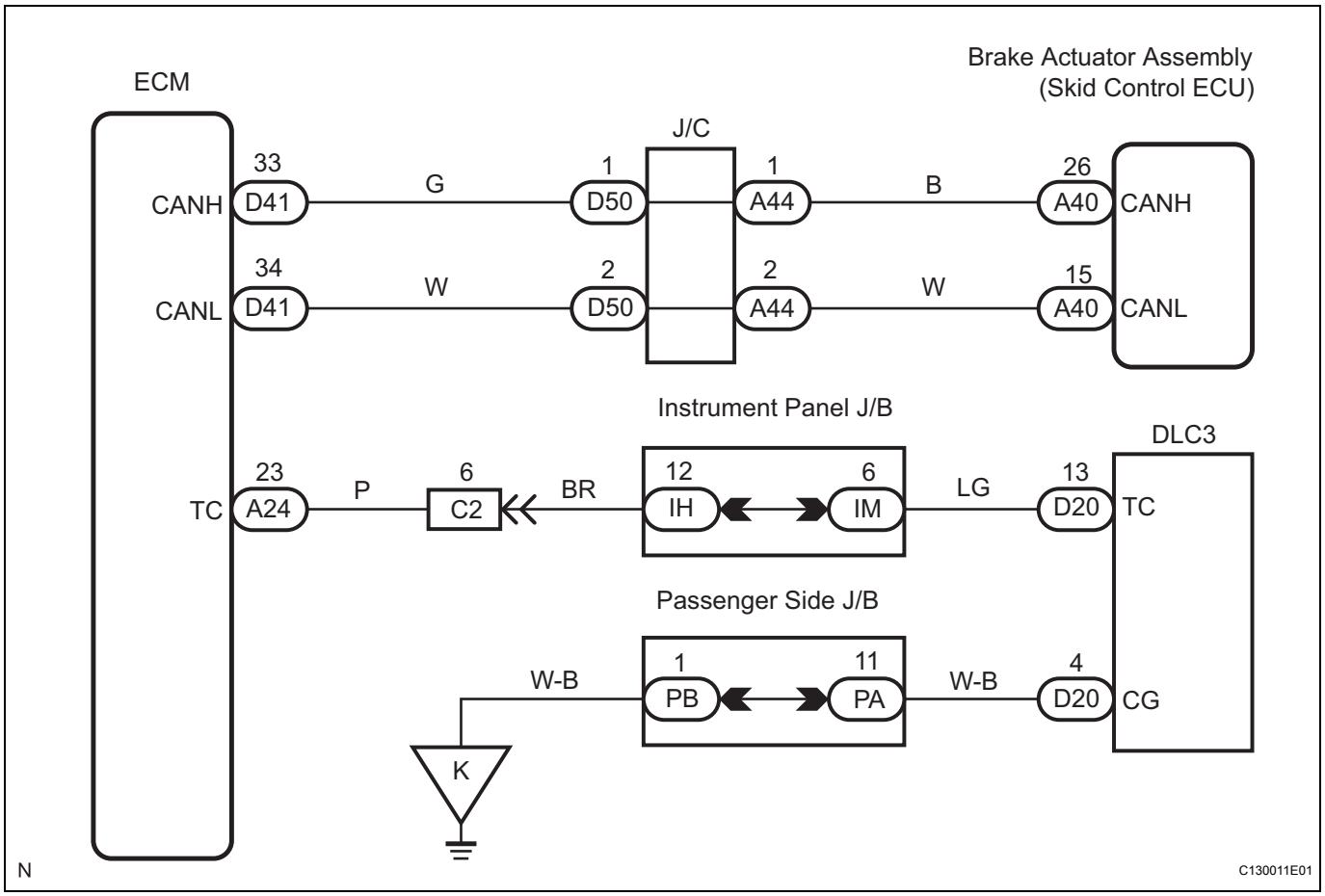

HINT:
When warning lights continue to blink, a ground short in the wiring of terminal TC of the DLC3 or an internal ground short in one or more ECUs is suspected.

INSPECTION PROCEDURE

1	INSPECT DLC3 TERMINAL VOLTAGE (TC TERMINAL VOLTAGE)

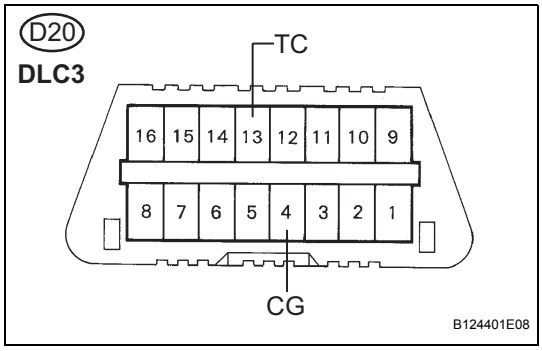

(a) Turn the ignition switch on (IG).
(b) Measure the voltage according to the value(s) in the table below.
Voltage

Tester Connection	Condition	Specified Condition
D20-13 (TC) - Body ground	Ignition switch on (IG)	10 to 14 V

(c) Measure the resistance according to the value(s) in the table below.
Resistance

Tester Connection	Specified Condition
D20-4 (CG) - Body ground	Below 1 Ω

NG → **Go to step 4**

OK

2	CHECK HARNESS AND CONNECTOR (ECM TO DLC3)

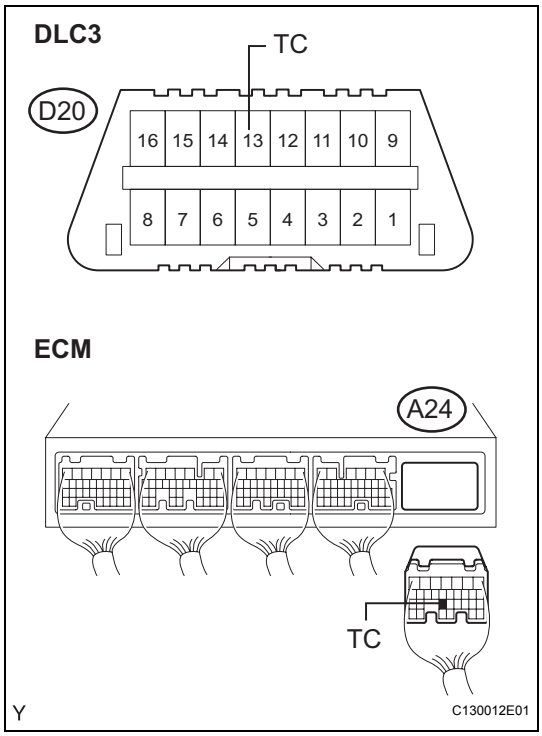

(a) Disconnect the ECM connector.
(b) Measure the resistance according to the value(s) in the table below.
Resistance

Tester Connection	Specified Condition
A24-23 (TC) - D20-13 (TC)	Below 1 Ω

(c) Measure the resistance according to the value(s) in the table below.
Resistance

Tester Connection	Specified Condition
D20-13 (TC) - Body ground	10 kΩ or higher

NG → **REPAIR OR REPLACE HARNESS OR CONNECTOR (TC TERMINAL CIRCUIT)**

OK

3	CHECK CAN COMMUNICATION SYSTEM

(a) Check if the CAN communication system DTC is output (See page CA-15).

BC

Result

Result	Proceed to
DTC is not output	A
DTC is output	B

HINT:
If troubleshooting has been carried out according to the PROBLEM SYMPTOMS TABLE, refer back to the table and proceed to the next step before replacing the part (See page BC-15).

B → **REPAIR CIRCUIT INDICATED BY OUTPUT CODE**

A

REPLACE BRAKE ACTUATOR ASSEMBLY

4 CHECK HARNESS AND CONNECTOR (ECM TO DLC3)

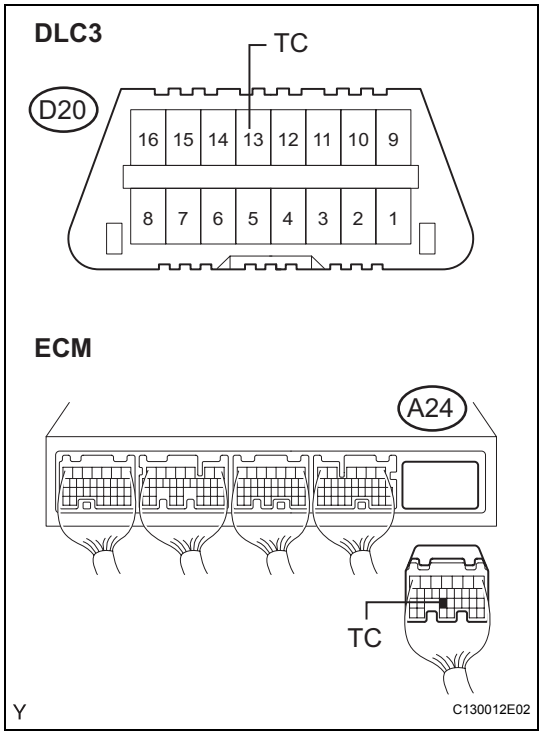

(a) Disconnect the ECM connector.
(b) Measure the resistance according to the value(s) in the table below.
Resistance

Tester Connection	Specified Condition
A24-23 (TC) - D20-13 (TC)	Below 1 Ω

(c) Measure the resistance according to the value(s) in the table below.
Resistance

Tester Connection	Specified Condition
D20-13 (TC) - Body ground	10 kΩ or higher

NG → **REPAIR OR REPLACE HARNESS OR CONNECTOR (TC CIRCUIT)**

OK

BC

5	CHECK HARNESS AND CONNECTOR (DLC3 TO BODY GROUND)

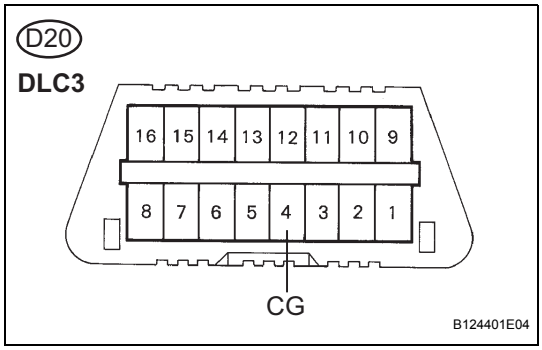

(a) Measure the resistance according to the value(s) in the table below.

Resistance

Tester Connection	Specified Condition
D20-4 (CG) - Body ground	Below 1 Ω

NG → **REPAIR OR REPLACE HARNESS OR CONNECTOR (GND CIRCUIT)**

OK

6	CHECK ECM (DLC3 (TC) INPUT)

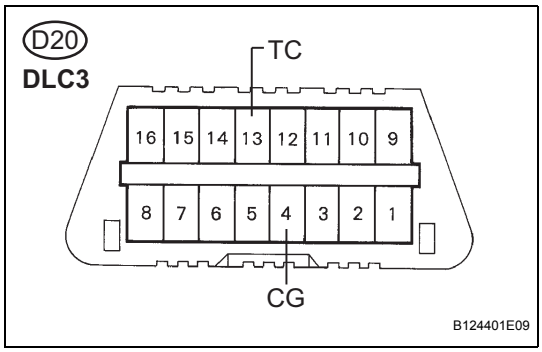

(a) Using the SST, connect the terminals TC and CG of the DLC3.

SST 09843-18040

(b) Check that the engine warning light is blinking.

Result

Result	Proceed to
Engine warning light is blinking	A
Engine warning light is not blinking	B

B → **REPLACE ECM**

A

BC

7	CHECK CAN COMMUNICATION SYSTEM

(a) Check if the CAN communication system DTC is output (See page BC-15).

Result

Result	Proceed to
DTC is not output	A
DTC is output	B

HINT:
If troubleshooting has been carried out according to the PROBLEM SYMPTOMS TABLE, refer back to the table and proceed to the next step before replacing the part (See page BC-26).

B → **REPAIR CIRCUIT INDICATED BY OUTPUT CODE**

A

REPLACE BRAKE ACTUATOR ASSEMBLY

TS and CG Terminal Circuit

DESCRIPTION

The sensor check circuit detects troubles in the sensor signal which cannot be detected by the DTC check.
Connecting terminals TS and CG of the DLC3 starts the check.

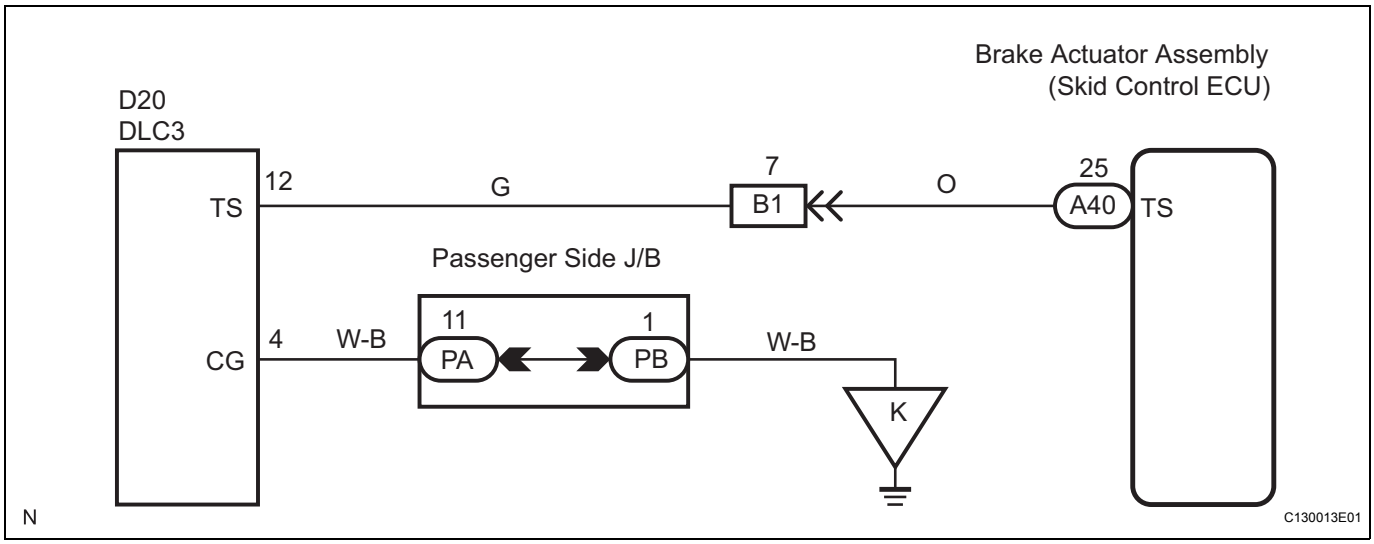

WIRING DIAGRAM

INSPECTION PROCEDURE

1	CHECK HARNESS AND CONNECTOR (TS of DLC3 TO TS of SKID CONTROL ECU)

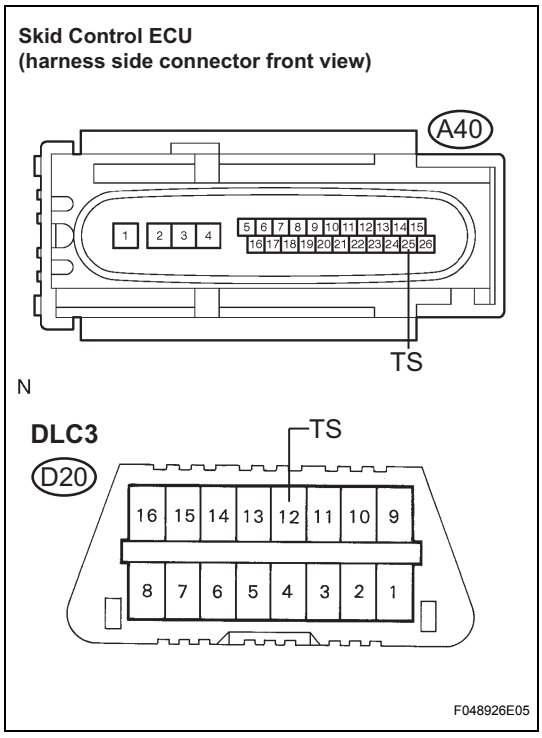

(a) Turn the ignition switch OFF.
(b) Disconnect the skid control ECU connector.
(c) Measure the resistance according to the value(s) in the table below.

Resistance

Tester Connection	Condition	Specified Condition
D20-12 (TS) - A40-25 (TS)	Always	Below 1 Ω

(d) Measure the resistance according to the value(s) in the table below.

Resistance

Tester Connection	Condition	Specified Condition
A40-25 (TS) - Body ground	Always	10 kΩ or higher

NG	REPAIR OR REPLACE HARNESS OR CONNECTOR (TS of DLC3 TO TS of SKID CONTROL ECU)

BC

OK

2	CHECK HARNESS AND CONNECTOR (CG of DLC3 TO BODY GROUND)

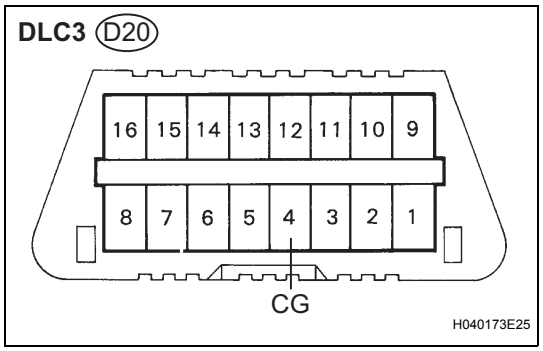

(a) Measure the resistance according to the value(s) in the table below.

Resistance

Tester Connection	Condition	Specified Condition
D20-4 (CG) - Body ground	Always	Below 1 Ω

HINT:
If troubleshooting has been carried out according to the PROBLEM SYMPTOMS TABLE, refer back to the table and proceed to the next step before replacing the part (See page BC-15).

NG → **REPAIR OR REPLACE HARNESS OR CONNECTOR (CG of DLC3 TO BODY GROUND)**

OK

REPLACE BRAKE ACTUATOR ASSEMBLY

VEHICLE STABILITY CONTROL SYSTEM

PRECAUTION

NOTICE:
When disconnecting the negative (-) battery terminal, initialize the following system(s) after the terminal is reconnected.

System Name	See procedure
Power Window Control System	IN-29
Sliding Roof System	

1. TROUBLESHOOTING PRECAUTION

NOTICE:

- **When there is a malfunction in the contact point of the terminals or installation problems with parts, removal and installation of the suspected problem parts may return the system to the normal condition either completely or temporarily.**
- **In order to determine the malfunctioning area, be sure to check the conditions at the time the malfunction occurred, such as by DTC output and freeze frame data output, and record it before disconnecting each connector or removing and installing parts.**
- **Since the ABS with EBD & BA & TRAC & VSC systems may be influenced by a malfunction in the other systems, be sure to check for DTCs in the other systems.**
- **Be sure to remove and install the ABS & TRACTION actuator assembly and each sensor with the ignition switch off unless specified in the inspection procedure.**
- **When removing and installing the ABS & TRACTION actuator assembly and each sensor, be sure to check that the normal display is output in the test mode inspection and in DTC output inspection after installing all the parts.**
- **After replacing the ABS & TRACTION actuator assembly and/or the yaw rate and acceleration sensor, make sure to perform yaw rate and acceleration sensor zero point calibration.**
- **The CAN communication system is used for data communication between the skid control ECU, the steering angle sensor, and the yaw rate sensor (the acceleration sensor is included).**
  If there is trouble in the CAN communication line, the DTC of the communication line is output.
- **If the DTC of the CAN communication line is output, repair the malfunction in the communication line and troubleshoot the ABS with EBD & BA & TRAC & VSC systems.**

- **Since the CAN communication line has its own length and route, it cannot be repaired temporarily with the bypass wire, etc.**

2. EXPRESSIONS OF IGNITION SWITCH

The type of ignition switch used on this model differs according to the specifications of the vehicle.
The expressions listed in the table below are used in this section.

Switch Type		Ignition Switch (position)	Engine Switch (condition)
Expression	Ignition Switch off	LOCK	Off
	Ignition Switch on (IG)	ON	On (IG)
	Ignition Switch on (ACC)	ACC	On (ACC)
	Engine Start	START	Start

PARTS LOCATION

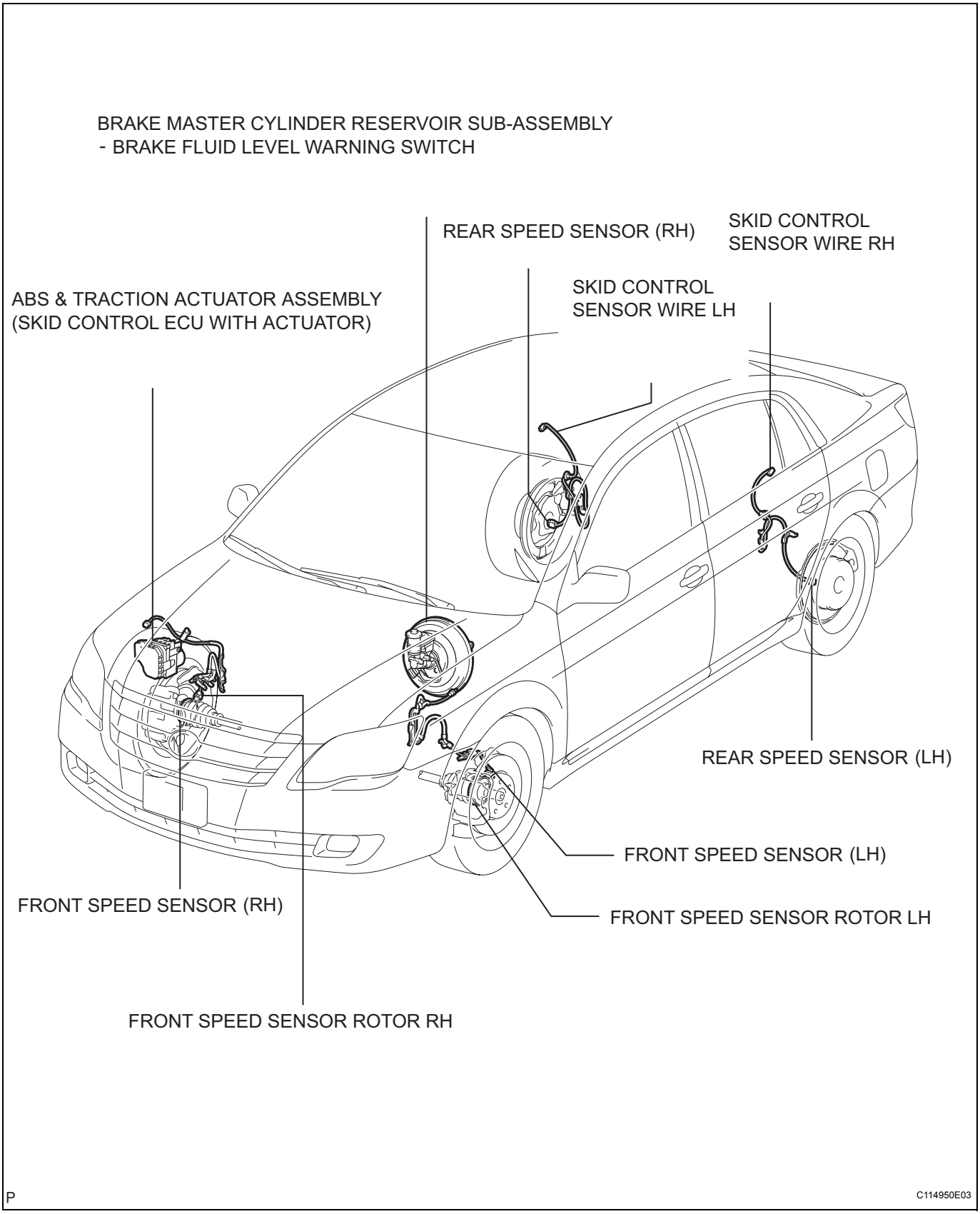

BC

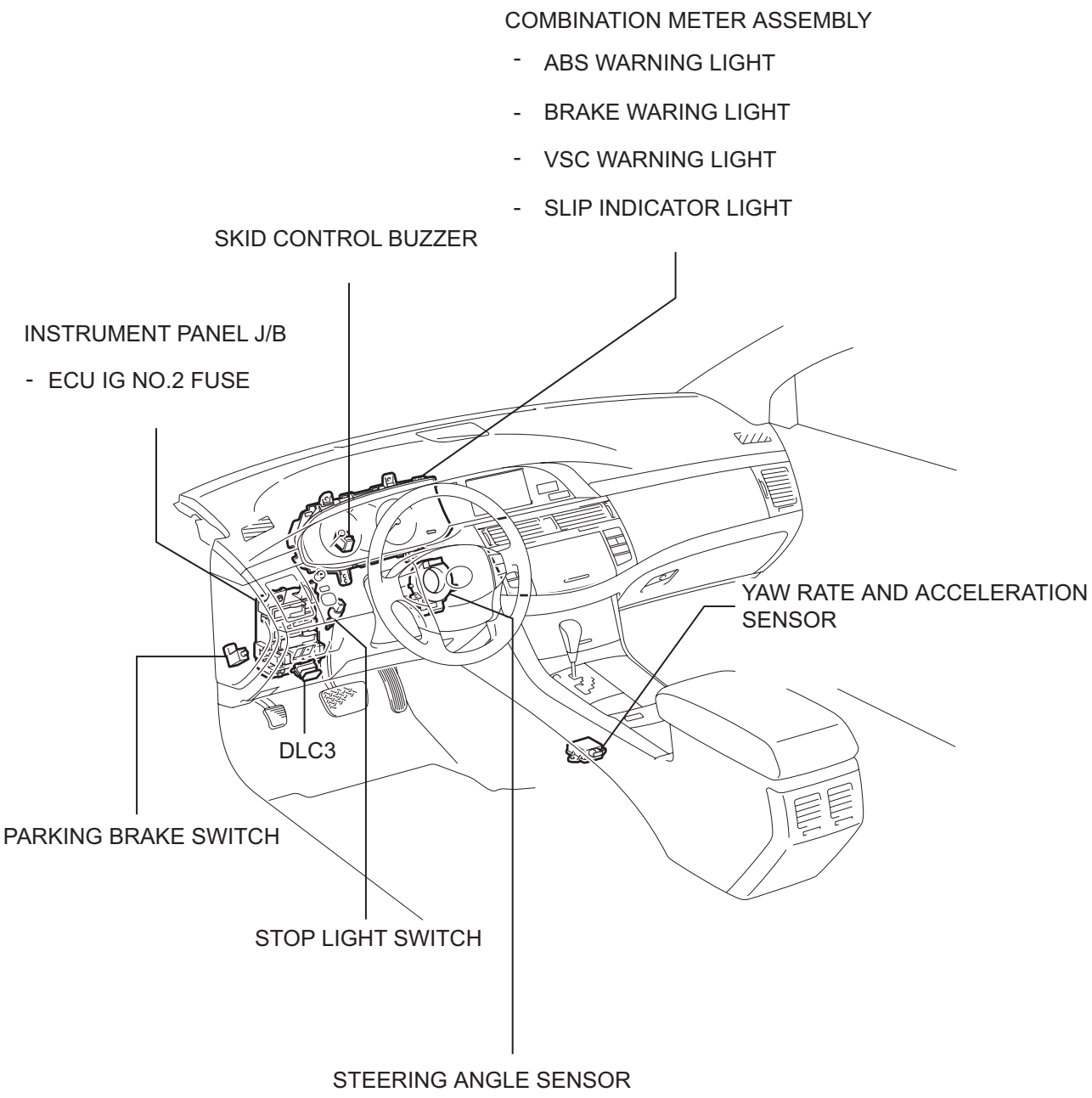

BC

P

C114882E03

SYSTEM DIAGRAM

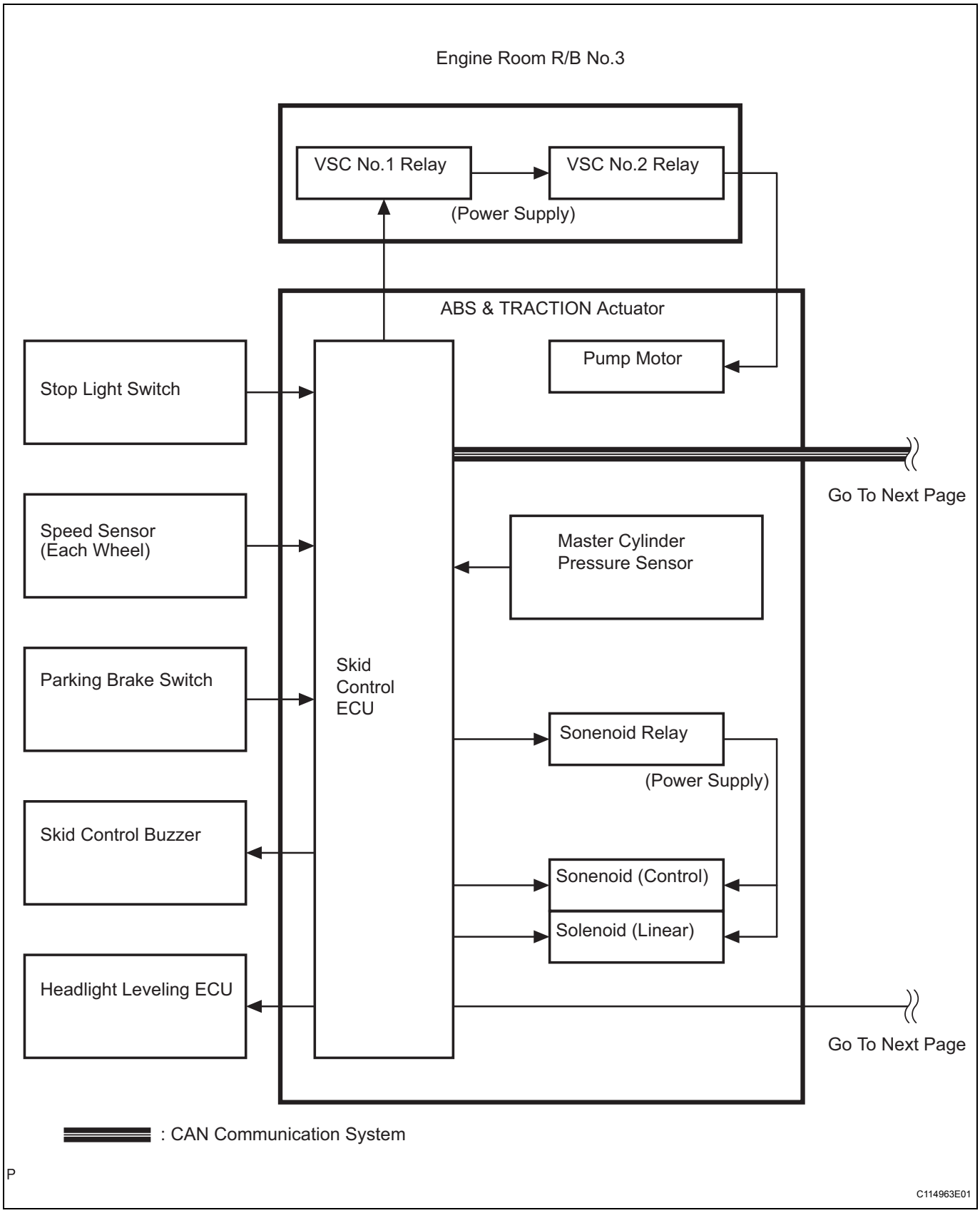

BC

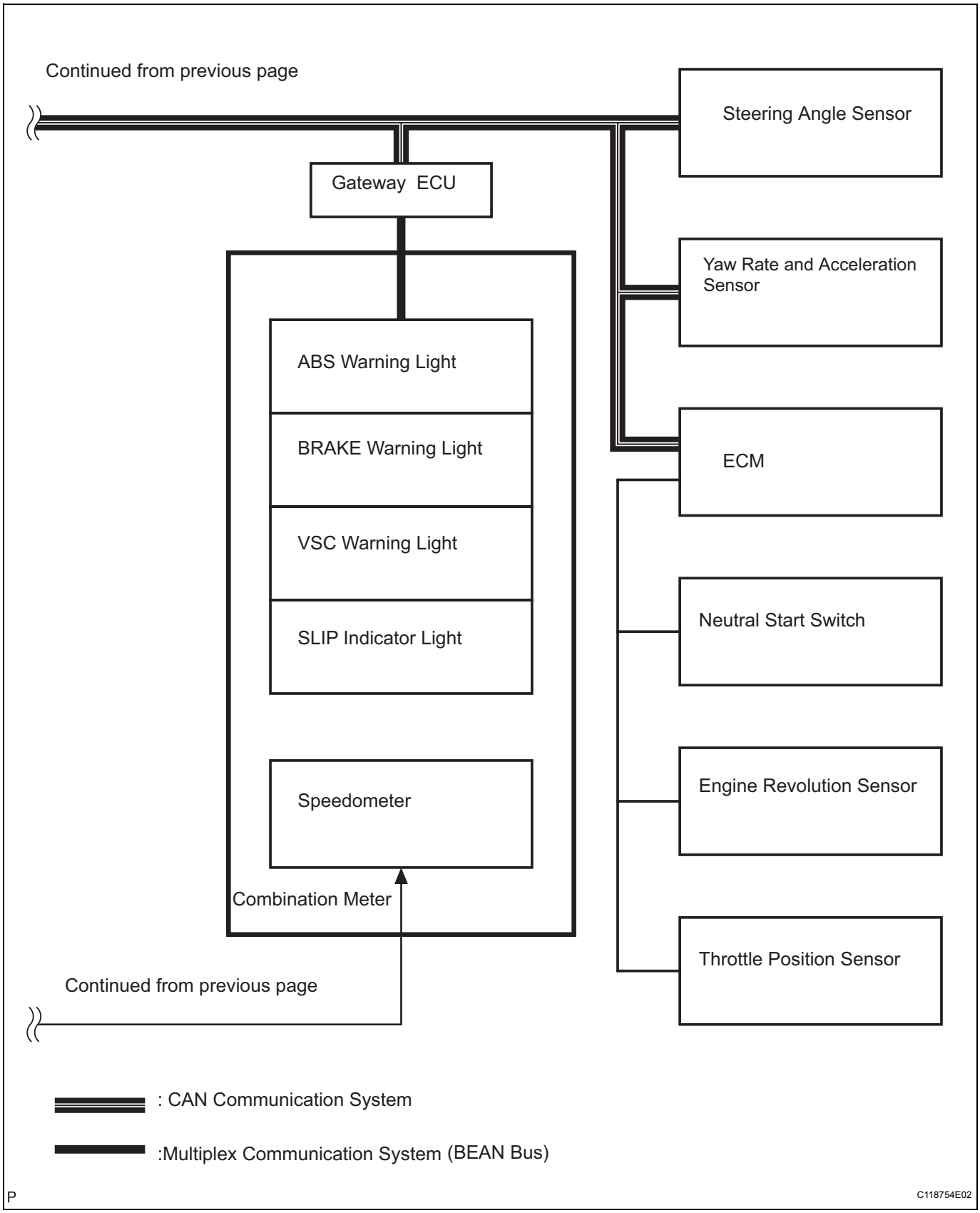

Transmitting ECU (transmitter)	Receiving ECU	Signals	Communication method
ECM	Skid Control ECU	• Shift Position signal • Throttle Position Signal • Engine Revolution Signal	CAN Communication System

BC

Transmitting ECU (transmitter)	Receiving ECU	Signals	Communication method
Skid Control ECU	ECM	• Yaw Rate and Acceleration Signal • Torque Demand Signal	CAN Communication System
Skid Control ECU	Combination Meter	• ABS Warning Light ON Signal • VSC Warning Light ON Signal • Brake Warning Light ON Signal • SLIP Indicator Light ON Signal	• CAN Communication System • Multiplex communication System

SYSTEM DESCRIPTION

1. SYSTEM DESCRIPTION

HINT:

- The skid control ECU is located within the ABS & TRACTION actuator assembly.
- The yaw rate sensor and acceleration sensor are combined and in a signal unit. This unit communicates with the skid control ECU through CAN communication.

(a) ABS (Anti-lock Brake System)

The ABS helps prevent the wheels from locking when the brakes are applied firmly or when braking on a slippery surface.

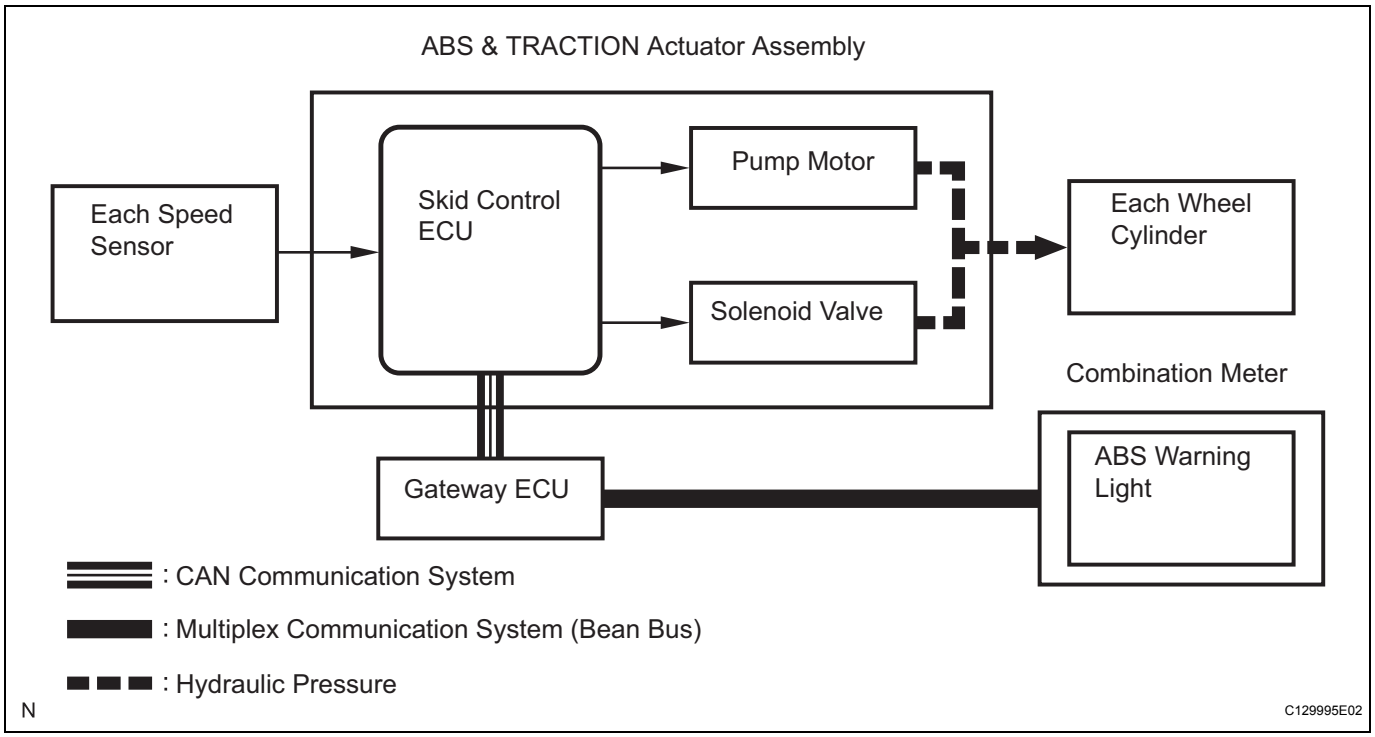

(1) Operation description

The skid control ECU detects wheel lock condition by receiving vehicle speed signals from each speed sensor, and sends control signals to the pump motor and solenoid valve. The pump motor and solenoid valve avoid wheel lock by controlling the hydraulic pressure of each wheel cylinder.

The ABS warning light comes on when the ABS system is malfunctioning.

BC

(b) EBD (Electronic Brake force Distribution)
The EBD control utilizes ABS, realizing proper brake force distribution between the front and rear wheels in accordance with driving conditions.
In addition, when braking while cornering, it also controls the brake forces of the right and left wheels, helping to maintain vehicle behavior.

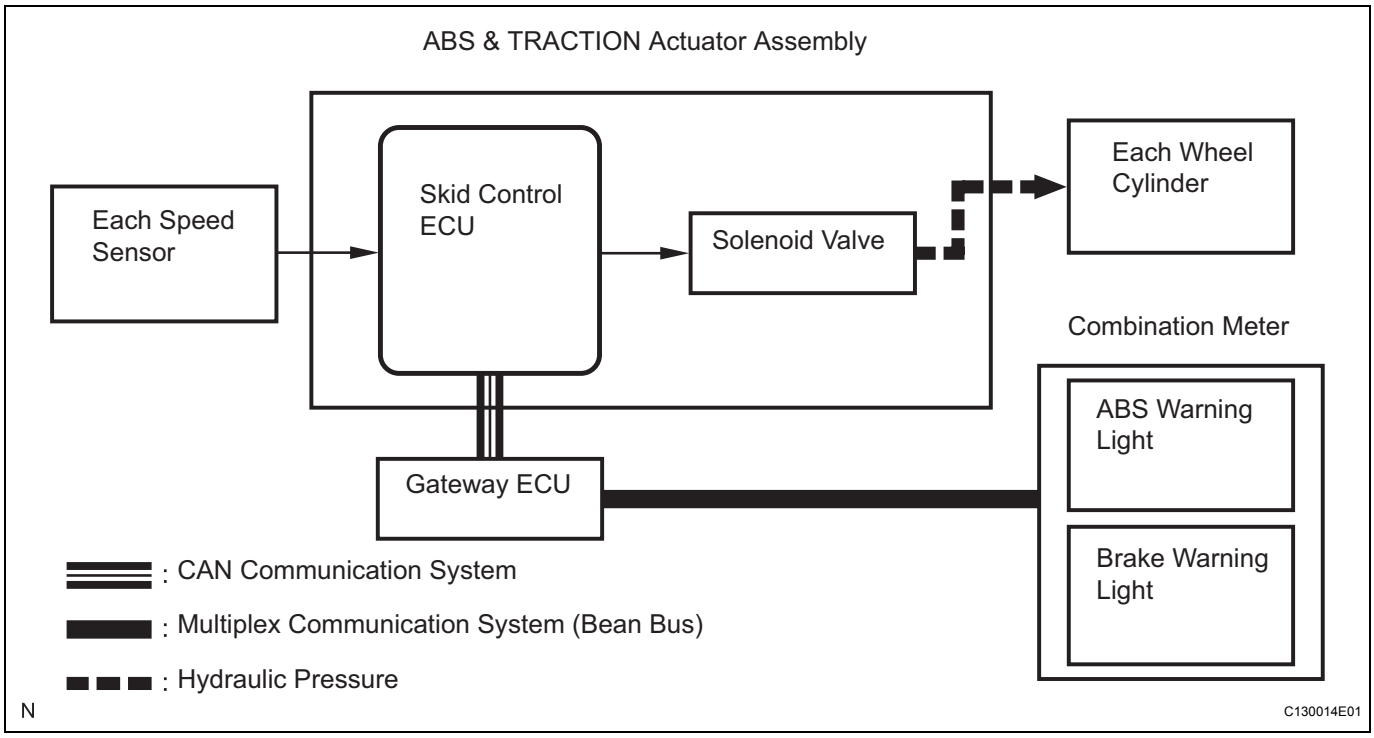

(1) Operation description
The skid control ECU receives the speed signal from each speed sensor to detect the slip condition of the wheels and sends the control signal to the solenoid.
The solenoid valve controls the hydraulic pressure of each wheel cylinder and splits the control power properly between the front and rear wheels and the right and left wheels.
Both of the ABS and BRAKE warning lights come on to indicate a malfunction in the EBD system.

(c) BA (Brake Assist)
The primary purpose of the brake assist system is to provide auxiliary brake force to assist the driver who cannot generate a large enough brake force during emergency braking , thus helping to maximize the vehicle's brake performance.

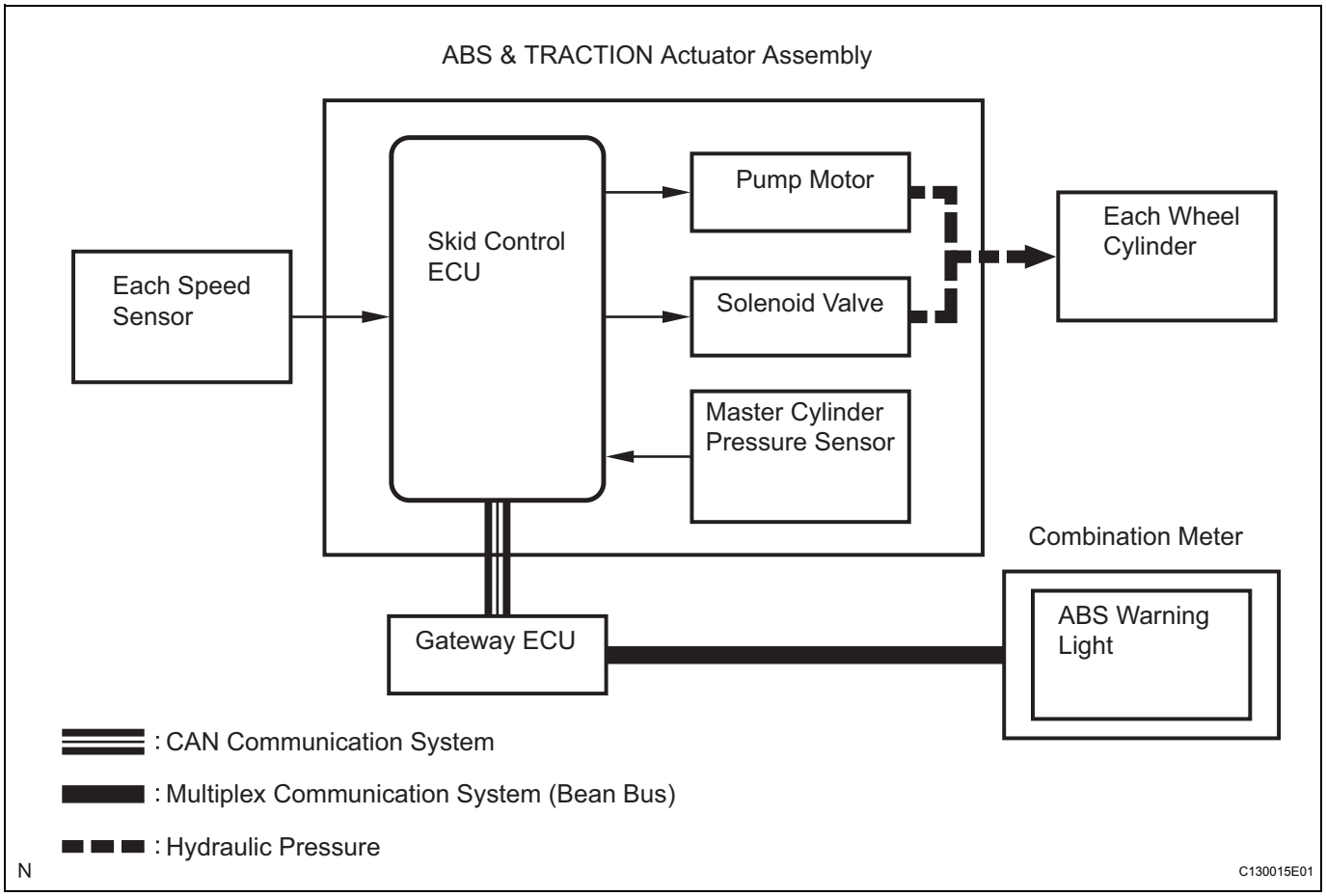

(1) Operation description
The skid control ECU receives the hydraulic pressure signal from the master cylinder pressure sensor to determine whether brake assist is necessary or not. If brake assist is deemed necessary, the skid control ECU sends control signals to the pump motor and solenoid. The pump and the solenoid valve then control the pressure applied to each wheel cylinder. The ABS warning light comes on to indicate a malfunction in the BA (brake assist) system.

(d) TRAC (Traction Control)
The TRAC system helps prevent the drive wheels from slipping if the driver presses down on the accelerator pedal excessively when starting off or accelerating on a slippery surface.

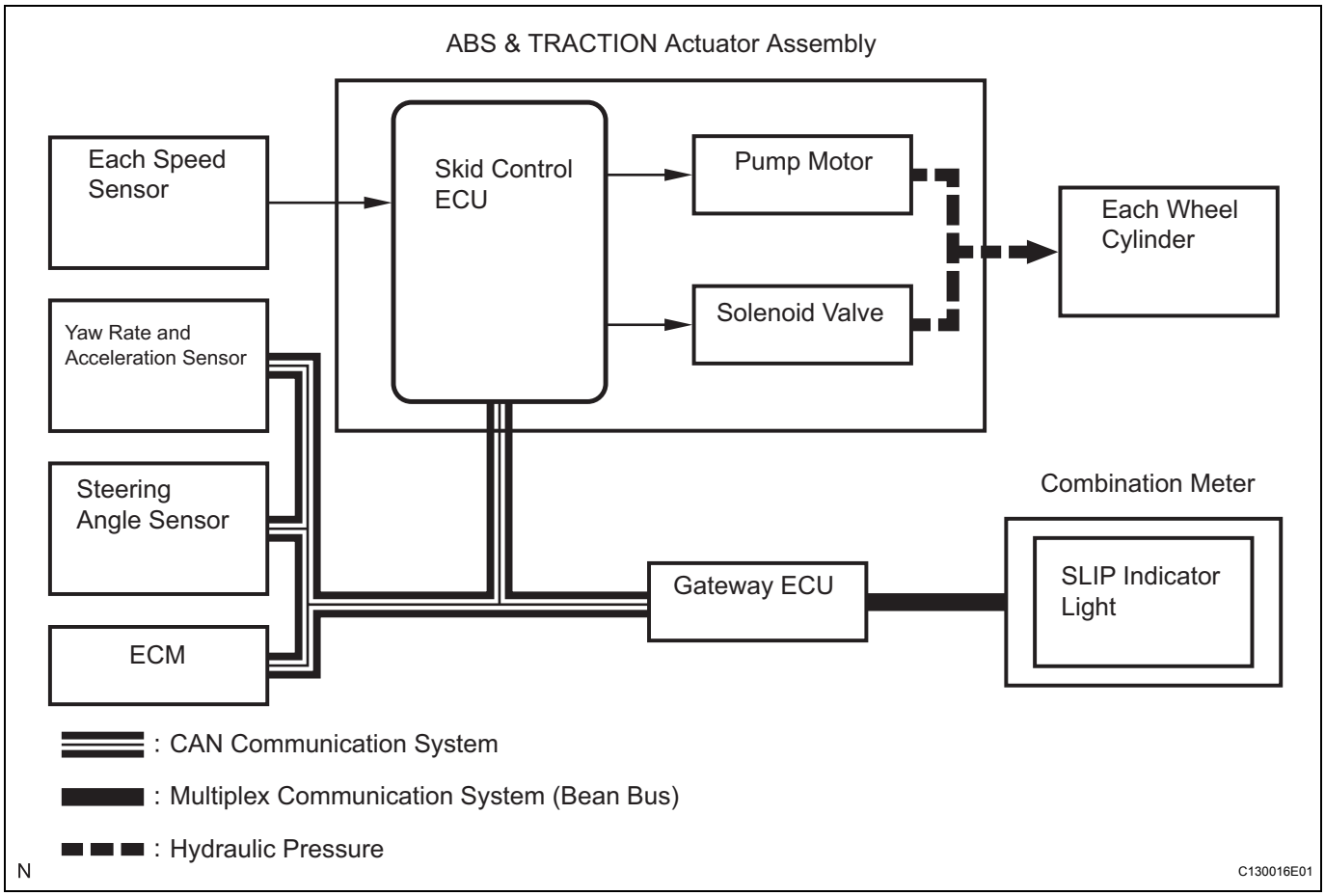

(1) Operation description
The skid control ECU detects vehicle's slip condition by receiving signals from each speed sensor and ECM via CAN communication. The skid control ECU controls engine torque with the ECM via CAN communication and hydraulic pressure through the pump and solenoid valve. The SLIP indicator light blinks when the system is operating.

(e) VSC (Vehicle Stability Control)
The VSC system helps prevent the vehicle from slipping sideways as a result of strong front or rear wheel skid during cornering.

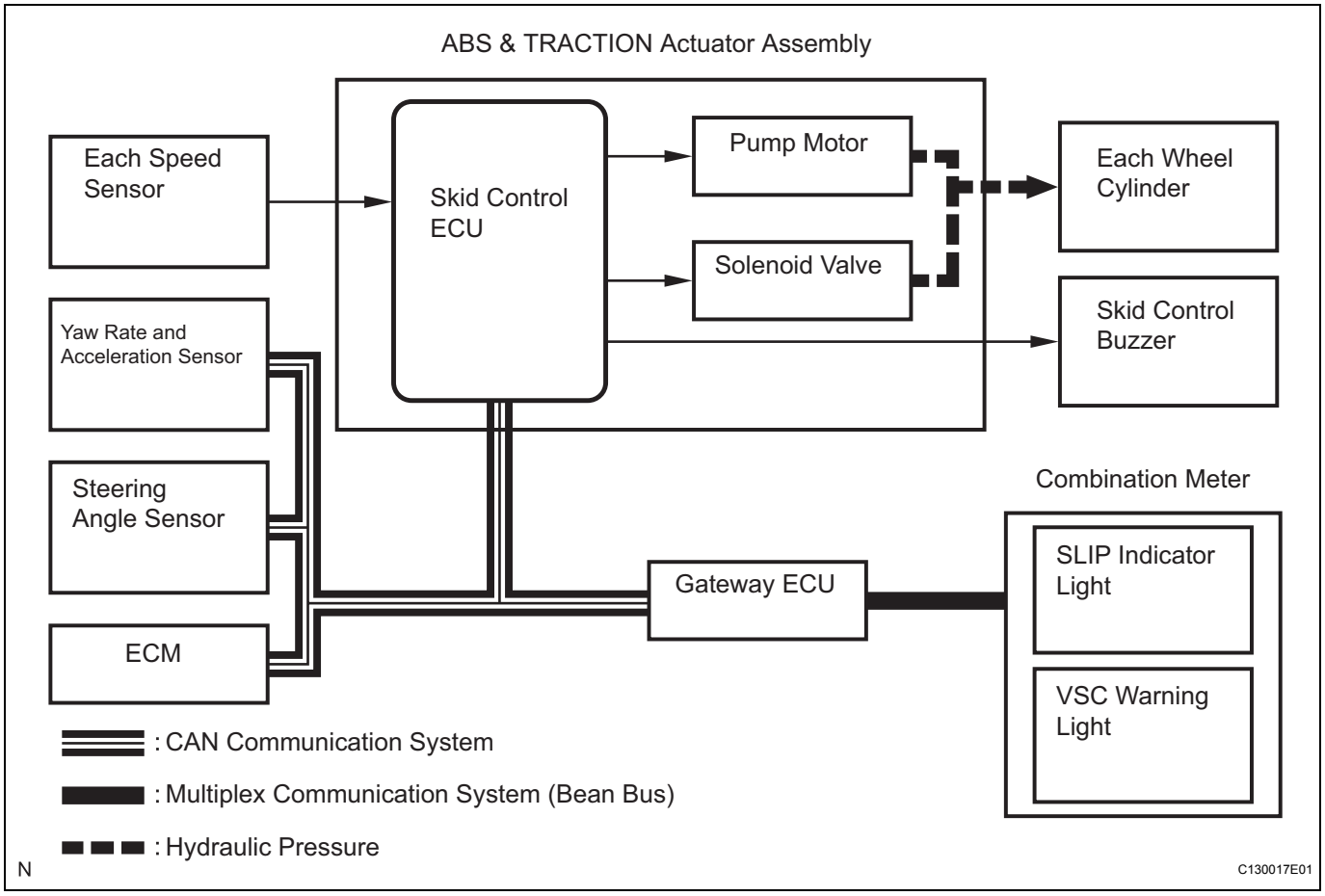

(1) Operation description
The skid control ECU determines vehicle condition by receiving signals from the speed sensor, yaw rate and acceleration sensor and steering angle sensor. The skid control ECU controls engine torque with the ECM via CAN communication, and hydraulic pressure with the pump and solenoid valve. The SLIP indicator light blinks and the buzzer sounds when the system is operating.

2. ABS with EBD & BA & TRAC & VSC OPERATION

(a) The skid control ECU calculates vehicle stability tendency based on the signals from the speed sensor, yaw rate and acceleration sensor and steering angle sensor. In addition, it evaluates the results of the calculations to determine whether any control actions (control of the engine output torque by electronic throttle control and the wheel brake pressure by the ABS & TRACTION actuator assembly) should be implemented.

(b) The SLIP indicator blinks and the skid control buzzer sounds to inform the driver that the VSC system is operating. The SLIP indicator also blinks when traction control is operating, and the operation being performed is displayed.

3. FAIL SAFE FUNCTION

(a) When a failure occurs in the ABS with BA & TRAC & VSC systems, the ABS warning light and the VSC warning light come on and ABS with BA & TRAC & VSC operations are prohibited. In addition to this, when there is a failure that disables the EBD operation, the brake warning light also comes on and the EBD operation is prohibited.

(b) If control is prohibited due to a malfunction during operation, control will be disabled gradually. This is to avoid sudden vehicle instability.

4. INITIAL CHECK

When the vehicle speed first becomes approximately 4 mph (6 km/h) or more after the ignition switch is turned on (IG), each solenoid valve and motor of the brake actuator is sequentially activated to perform an electrical check. During the initial check, the operating sound of solenoid valve and motor can be heard from the engine compartment, but this is not a malfunction.

5. FUNCTION OF COMPONENTS

Components	Function
Front and speed sensors	Detect the wheel speed and send the signal to the skid control ECU.
Skid control ECU (housed in ABS & TRACTION actuator assembly)	• Processes the signals sent from each sensor to control the ABS, BA, TRAC, and VSC. • Sends and receives the control signals to or from the ECM, yaw rate and acceleration sensor, and steering angle sensor, etc. via CAN communication.
ABS & TRACTION actuator assembly	• Consists of the master cylinder cut solenoid valve, retention solenoid valve, pressure reduction solenoid valve, pump motor, and reservoir, and adjusts the brake hydraulic pressure applied to each wheel cylinder. • Housed in the skid control ECU.
Solenoid relay	• Supplies power to each solenoid. • Houses the skid control ECU
Motor relay (VSC No.1 relay)	• Supplies power to .pump motor. • Installed in the engine room R/B No.3.
Fail-safe relay (VSC No.2 relay)	• Cuts off power to the motor when the pump motor circuit malfunctions. • Installed in the engine room R/B No.3.
Steering angle sensor	• Installed in the combination switch. • Detects the steering amount and direction and sends the signals to the skid control ECU via CAN communication. • Has the magnetic resistance element which detects the rotation of the magnet housed in the detection gear in order to detect the changes of magnetic resistance and the steering amount and direction.
Yaw rate and acceleration sensor	• Acceleration sensor measures the amount of deflection of beam in the sensor, which occurs when the vehicle is accelerated, and converts the measured value into electrical signals. • Yaw rate sensor detects the vehicle's angular velocity (yaw rate) in the vertical direction based on the amount and direction of the piezoelectric ceramics deflection. • Sends signals to the skid control ECU via CAN communication.
Master cylinder pressure sensor	• Detects the hydraulic pressure in the master cylinder. • Housed in the ABS & TRACTION actuator assembly.
ECM	Controls the engine output when TRAC and VSC are operating with the skid control ECU via CAN communication.

Components	Function
Skid control buzzer	Intermittently sounds to inform the driver that the VSC is operating.
ABS warning light	• Comes on to inform the driver that a malfunction in the ABS or BA (Brake Assist) has occurred. • Blinks to output DTC.
BRAKE warning light	• Comes on to inform the driver that the parking brake is ON when the system is normal or the brake fluid has decreased. • Simultaneously comes on with the ABS warning light to inform the driver that both ABS and EBD cannot operate.
VSC warning light	• Comes on to inform the driver that a malfunction in the VSC system has occurred. • Blinks to output DTC.
SLIP indicator light	Blinks to inform the driver that TRAC and VSC are operating.

6. SERVICE MODE (VSC and TRAC prohibited mode)

HINT:

VSC and TRAC control can be prohibited by switching to service mode.

(a) Procedures for service mode.

HINT:

- Perform step (See procedure "A") to (See procedure "E") within 30 seconds.
- Perform step (See procedure "C") and (See procedure "D") within 15 seconds each.
- Make sure that the shift lever is in the P position.

(1) Turn the ignition switch on (IG).

(2) Apply the parking brake (Procedure "A").

(3) Depress and release the brake pedal twice (Procedure "B").

(4) While holding the brake pedal down, release and apply the parking brake twice (Procedure "C").

(5) With the parking brake applied, depress and release the brake pedal twice (Procedure "D").

(6) Check that the VSC warning light and SLIP indicator light come on (Procedure "E").

HINT:

- If the VSC warning light and SLIP indicator light do not come on, repeat the procedures.
- Turning the ignition switch off ends service mode.

HOW TO PROCEED WITH TROUBLESHOOTING

The intelligent tester can be used at steps 3, 4, 6, 7, 11, 14, and 17.

1	VEHICLE BROUGHT TO WORKSHOP

NEXT

2	CUSTOMER PROBLEM ANALYSIS

NEXT

3	CHECK DTC AND FREEZE FRAME DATA

NEXT

4	CLEAR DTC AND FREEZE FRAME DATA

NEXT

5	PROBLEM SYMPTOM CONFIRMATION

NEXT

6	CHECK CAN COMMUNICATION SYSTEM

(a) Check for output DTCs.
HINT:
The ECU of this system is connected to the CAN communication system. Therefore, before starting troubleshooting, make sure to check that there is no trouble in the CAN communication system.

BC

→	CAN COMMUNICATION SYSTEM DTC IS OUTPUT: PROCEED TO CAN COMMUNICATION SYSTEM
→	NO CAN COMMUNICATION SYSTEM DTC IS OUTPUT: GO TO STEP 7

7	CHECK MULTIPLEX COMMUNICATION SYSTEM

(a) Check for output DTCs.

HINT:
The skid control ECU sends the signals of each warning light to the gateway ECU via CAN communication, and the gateway ECU sends the signals to the combination meter via multiplex communication system (BEAN).

MULTIPLEX COMMUNICATION SYSTEM DTC IS OUTPUT: PROCEED TO MULTIPLEX COMMUNICATION SYSTEM

NO MULTIPLEX COMMUNICATION SYSTEM DTC IS OUTPUT: GO TO STEP 8

8	**DTC CHECK AND CLEAR**

NEXT

9	**PROBLEM SYMPTOM SIMULATION**

SYMPTOM DOES NOT OCCUR: GO TO STEP 10

SYMPTOM OCCURS: GO TO STEP 11

10	**SYMPTOM SIMULATION**

NEXT

11	**DTC CHECK (OTHER THAN CAN AND MULTIPLEX COMMUNICATION SYSTEM DTC)**

NORMAL SYSTEM CODE: GO TO STEP 12

TROUBLE CODE: GO TO STEP 13

12	**PROBLEM SYMPTOMS TABLE**

NEXT

GO TO STEP 14

13	**DTC CHART**

NEXT

14	CIRCUIT INSPECTION

NEXT

15	IDENTIFICATION OF PROBLEM

NEXT

16	REPAIR OR REPLACE

NEXT

17	CONFIRMATION TEST

NEXT

END

CHECK FOR INTERMITTENT PROBLEMS

1. CHECK FOR INTERMITTENT PROBLEMS

HINT:

A momentary interruption (open circuit) in the connectors and/ or wire harness between the sensors and ECUs can be detected i n the ECU data list function of the intelligent tester.

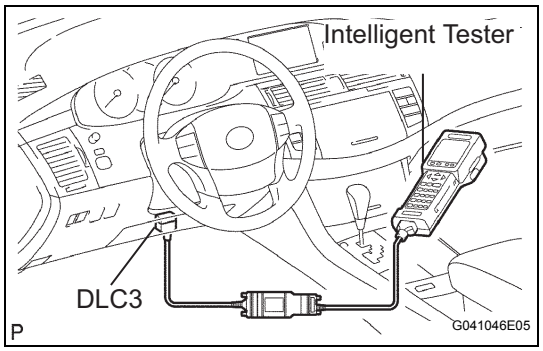

(a) Turn the ignition switch off and connect the intelligent tester to the DLC3.

(b) Turn the ignition switch on (IG). Follow the directions on the intelligent tester to display the DATA LIST and select areas where momentary interruption should be monitored.

HINT:

A momentary interruption (open circuit) cannot be detected for 3 seconds after the ignition switch is turned on (IG) (initial check).

Item	Measurement Item / Range (Display)	Normal Condition	Diagnostic Note
SPD SEN FR	FR speed sensor open detection / OPN DET or NORMAL	OPN DET: Momentary interruption NORMAL: Normal	-
SPD SEN FL	FL speed sensor open detection / OPN DET or NORMAL	OPN DET: Momentary interruption NORMAL: Normal	-
SPD SEN RR	RR speed sensor open detection / OPN DET or NORMAL	OPN DET: Momentary interruption NORMAL: Normal	-
SPD SEN RL	RL speed sensor open detection / OPN DET or NORMAL	OPN DET: Momentary interruption NORMAL: Normal	-
EFI COM	EFI communication open detection / OPN DET or NORMAL	OPN DET: Momentary interruption NORMAL: Normal	-
YAWRATE SEN	Yaw rate sensor open detection / OPN DET or NORMAL	OPN DET: Momentary interruption NORMAL: Normal	-
DECELE SEN	G sensor open detection / OPN DET or NORMAL	OPN DET: Momentary interruption NORMAL: Normal	-
STEERING SEN	Steering sensor open detection / OPN DET or NORMAL	OPN DET: Momentary interruption NORMAL: Normal	-
M/C SEN1	Master Cylinder pressure sensor 1 open detection / OPN DET or NORMAL	OPN DET: Momentary interruption NORMAL: Normal	-

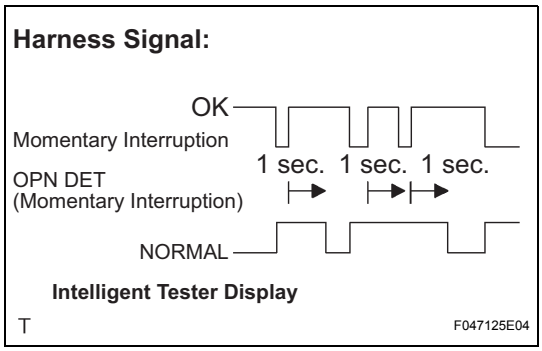

(c) Harness Signal.
HINT:
- If the status remains on (OPN DET displayed), check the continuity between the ECU and the sensors, or between ECUs.
- The OPN DET display on the intelligent tester remains on for 1 second after the harness signal changes from momentary interruption (open circuit) to normal condition.

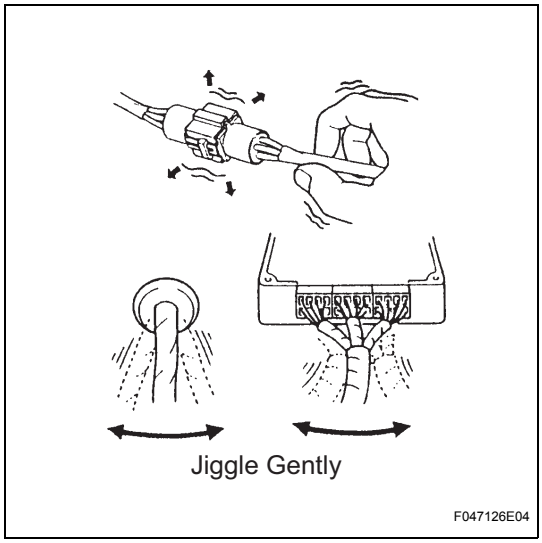

(d) While observing the screen, gently jiggle the connector or wire harness between the ECU and sensors, or between ECUs.
Result:
OPN DET display does not change.
HINT:
The connector and/or wire harness will be in momentary interruption (open circuit) if the display changes. Repair or replace connector and/or wire harness as one of them is faulty.

CALIBRATION

1. DESCRIPTION

- After replacing the VSC relevant components or performing "Front wheel alignment adjustment", clear and read the sensor calibration data.
- Follow the chart to perform calibration.

Replacing Parts / Operation	Necessary Operation
ABS & TRACTION Actuator Assembly (Skid Control ECU)	Yaw rate sensor and acceleration sensor zero point calibration.
Yaw Rate Sensor (Acceleration Sensor)	1. Clearing zero point calibration data. 2. Yaw rate and acceleration sensor zero point calibration.
Front Wheel Alignment Adjustment	1. Clearing zero point calibration data. 2. Yaw rate and acceleration sensor zero point calibration.

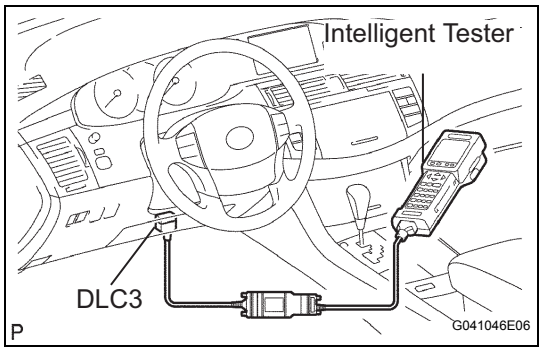

2. CLEAR ZERO POINT CALIBRATION (WHEN USING INTELLIGENT TESTER:)

(a) Connect the intelligent tester to the DLC3.
(b) Turn the ignition switch on (IG).
(c) Operate the intelligent tester to erase the codes (select "RESET MEMORY").
HINT:
Refer to the intelligent tester operator's manual for further details.
(d) Using the intelligent tester, perform zero point calibration of the yaw rate and acceleration sensor.

3. PERFORM ZERO POINT CALIBRATION OF YAW RATE SENSOR AND ACCELERATION SENSOR (WHEN USING INTELLIGENT TESTER:)

NOTICE:

- **While obtaining the zero point, do not vibrate the vehicle by tilting, moving or shaking it and keep it in a stationary condition. (Do not start the engine.)**
- **Be sure to do this on a level surface (with an inclination of less than 1 degree).**

(a) Procedures for test mode.
(1) Check that the steering wheel is in the straight-ahead position and move the shift lever to the P position.
NOTICE:
DTC C1210/36 and C1336/39 will be recorded if the shift lever is not in the P position (See page BC-165).
(2) Connect the intelligent tester to the DLC3.
(3) Turn the ignition switch on (IG).

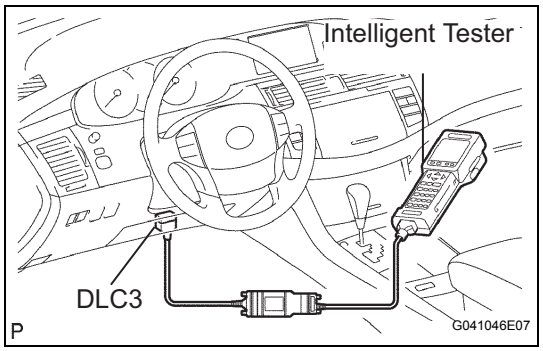

BC

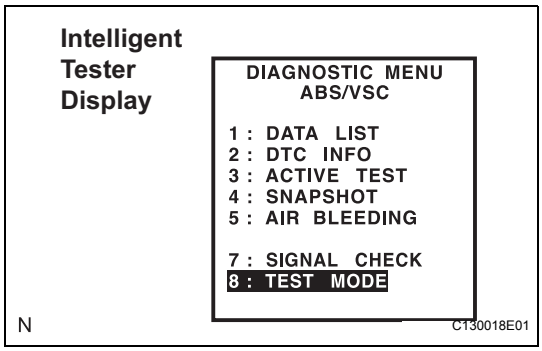

(4) Set intelligent tester to test mode (select "TEST MODE").
HINT:
Refer to the intelligent tester operator's manual for further details.

(b) Obtain the zero point of the yaw rate sensor and acceleration sensor.
(1) Keep the vehicle in the stationary condition on a level surface for 2 seconds or more.

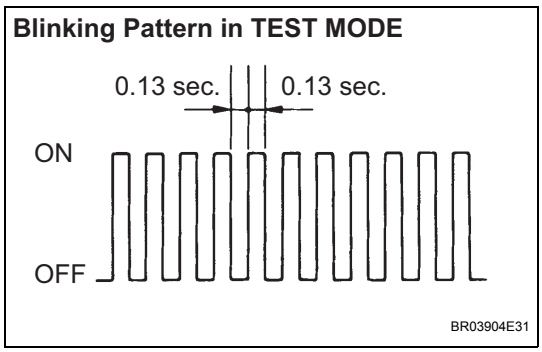

(2) Check that the VSC warning light is blinking in TEST MODE.
HINT:
- If the VSC warning light does not blink, perform zero point calibration again.
- The zero point calibration is performed only once after the system enters the test mode.
- Calibration cannot be performed again until the stored data is cleared once.

(c) Turn the ignition switch off and disconnect the intelligent tester.

4. CLEAR ZERO POINT CALIBRATION

(a) Turn the ignition switch on (IG).

(b) Using SST, connect and disconnect terminals TS and CG of the DLC4 times or more within 8 seconds.
SST 09843-18040

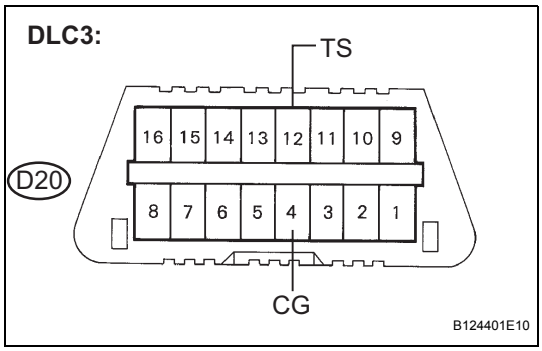

(c) Check that the VSC warning light indicates the normal system code.

(d) Remove the SST from the terminals of the DLC3.

(e) Using a check wire, perform zero point calibration of the yaw rate and acceleration sensor.

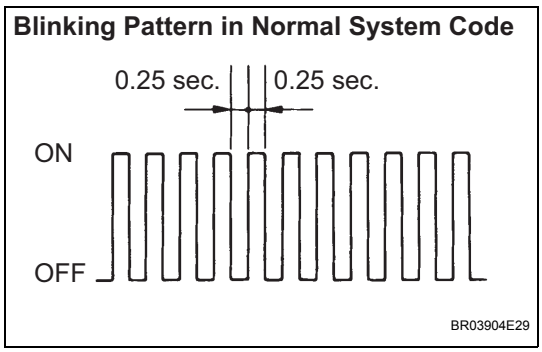

5. PERFORM ZERO POINT CALIBRATION OF YAW RATE SENSOR AND ACCELERATION SENSOR
NOTICE:
- **While obtaining the zero point, do not vibrate the vehicle by tilting, moving or shaking it and keep it in a stationary condition. (Do not start the engine.)**
- **Be sure to do this on a level surface (with an inclination of less than 1 degree).**

(a) Procedures for test mode.
(1) Turn the ignition switch off.

BC

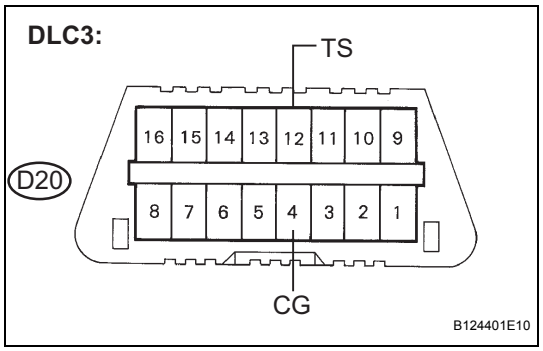

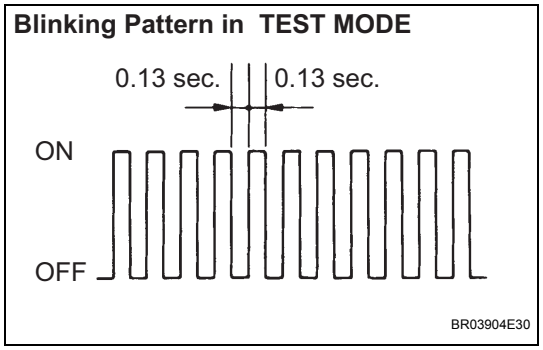

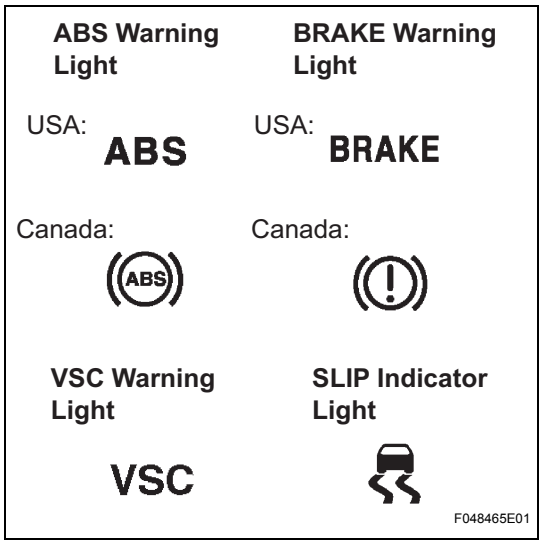

(2) Using SST, connect and terminals TS and CG of the DLC3.
SST 09843-18040

(3) Check that the steering wheel is in the straight-ahead position and move the shift lever to the P position.
NOTICE:
DTC C1210/36 and C1336/39 will be recorded if the shift lever is not in the P position (See page BC-165).

(b) Obtain the zero point of the yaw rate sensor and acceleration sensor.
(1) Turn the ignition switch on (IG).
(2) Keep the vehicle in the stationary condition on a level surface for 2 seconds or more.

(3) Check that the VSC warning light is blinking in TEST MODE.
HINT:
- If the VSC warning light does not blink, perform zero point calibration again.
- The zero point calibration is performed only once after the system enters the test mode.
- Calibration cannot be performed again until the stored data is cleared once.

(c) Turn the ignition switch off and disconnect the SST from the DLC3.

TEST MODE PROCEDURE

1. WARNING LIGHT AND INDICATOR LIGHT CHECK

(a) Release the parking brake.
NOTICE:
Before releasing the parking brake, move the shift lever to the P position for safety.
HINT:
When the parking brake is applied or the level of the brake fluid is low, the BRAKE warning light comes on.

(b) When the ignition switch is turned on (IG), check that the ABS warning light, VSC warning light, BRAKE warning light and SLIP indicator light come on for approximately 3 seconds.
HINT:
If the skid control ECU stores any DTCs, the ABS warning light, VSC warning light and SLIP indicator light come on.
If the indicator remains on or does not come on, proceed to troubleshooting for the light circuit below.

Trouble area	See procedure
ABS warning light circuit (Remains on)	BC-202
ABS warning light circuit (Does not come on)	BC-206
VSC warning light circuit (Remains on)	BC-208
VSC warning light circuit (Does not come on)	BC-212

BC

Trouble area	See procedure
SLIP indicator light circuit (Remains on)	BC-223
SLIP indicator light circuit (Does not come on)	BC-227
BRAKE warning circuit (Remains on)	BC-214
BRAKE warning circuit (Does not come on)	BC-221

2. SENSOR SIGNAL CHECK BY TEST MODE (WHEN USING INTELLIGENT TESTER:)

When having replaced the ABS & TRACTION actuator assembly and/or yaw rate and acceleration sensor, perform zero point calibration of the yaw rate and acceleration sensor.

HINT:

- If the ignition switch is turned from on (IG) to on (ACC) or to the ACC or off during test mode (SIGNAL CHECK), DTCs of the signal check function will be erased.
- During test mode (SIGNAL CHECK), the skid control ECU records all DTCs of the signal check function. By performing the test mode (SIGNAL CHECK), the codes are erased if normality is confirmed. The remaining codes are the codes where an abnormality was found.

(a) Procedure for test mode.

(1) Turn the ignition switch off.

(2) Connect the intelligent tester to the DLC3.

(3) Check that the steering wheel is in the straight-ahead position and move the shift lever to the P position. (Procedure A)

(4) Turn the ignition switch on (IG). (Procedure B)

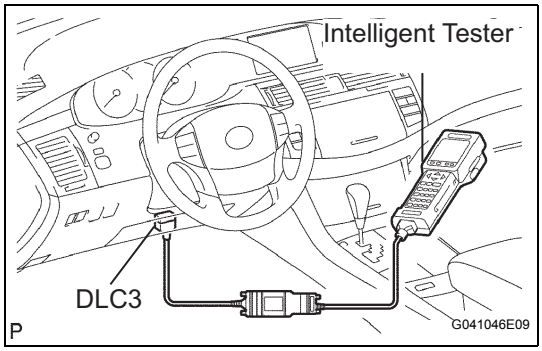

(5) Set the intelligent tester to test mode (select "SIGNAL CHECK"). (Procedure C)

HINT:

Refer to the intelligent tester operator's manual for further details.

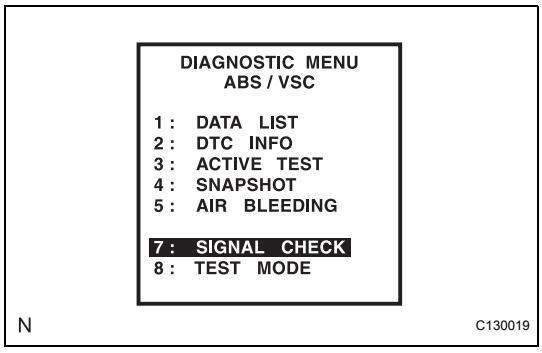

BC

Blinking Pattern in TEST MODE

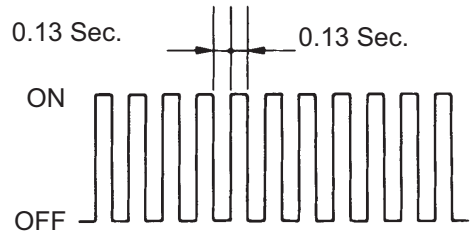

Blinking Pattern in TEST MODE

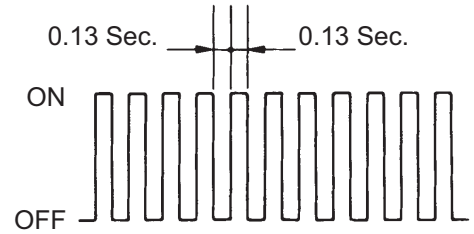

(6) Check that the ABS and VSC warning lights are blinking in TEST MODE.
HINT:
If the ABS and VSC warning lights do not blink, inspect the ABS warning light circuit and/or VSC warning light circuit.

Trouble area	See procedure
ABS warning light circuit (Remains on)	BC-202
ABS warning light circuit (Does not come on)	BC-206
VSC warning light circuit (Remains on)	BC-208
VSC warning light circuit (Does not come on)	BC-212

(7) Check the ABS sensor.
HINT:
Check that ABS warning light is blinking in TEST MODE and perform the check. (See procedure A to C)

3. ACCELERATION SENSOR CHECK (WHEN USING INTELLIGENT TESTER:)

(a) Keep the vehicle in the stationary condition on a level surface for 1 second or more.
HINT:
Acceleration sensor check can be performed with the following master cylinder pressure sensor check.

4. MASTER CYLINDER PRESSURE SENSOR CHECK (WHEN USING INTELLIGENT TESTER:)

(a) Leave the vehicle in a stationary condition and release the brake pedal for 1second or more, and quickly depress the brake pedal with a force of 98 N (10 kgf, 22 lbf) or more for 1 second or more.

(b) Check ABS warning light stays on for 3 seconds.
HINT:
- Ensure that the ABS warning light comes on.
- While the ABS warning light stays on, continue to depress the brake pedal with a force of 98 N (10 kgf, 22 lbf) or more.
- The ABS warning light comes on for 3 seconds every time brake pedal operation above is performed.

5. SPEED SENSOR CHECK (WHEN USING INTELLIGENT TESTER:)

(a) Check the backward signal.

(1) Drive the vehicle in reverse for more than 1 second at 2 mph (3 km/h) or higher.
HINT:
Drive the vehicle in reverse and check the speed sensor signal. Note that the signal check cannot be completed if the vehicle speed is 28 mph (45 km/h) or more.

(b) Check the forward signal.
(1) Drive the vehicle straight forward.
Accelerate the vehicle to a speed of 28 mph (45 km/h) or higher for several seconds and check that the ABS warning light goes off.
HINT:
The signal check may not be completed if the vehicle has its wheels spun or the steering wheel turned during this check.

(c) Stop the vehicle.
NOTICE:
- **Before performing the speed sensor signal check, complete the acceleration sensor and master cylinder pressure sensor checks.**
- **The speed sensor signal check may not be completed if the speed sensor signal check is started while turning the steering wheel or spinning the wheels.**
- **After the ABS warning light goes off and if the vehicle speed exceeds 50 mph (80 km/h), a signal check code will be stored again. Decelerate or stop the vehicle before the speed reaches 50 mph (80 km/h).**
- **If the signal check has not been completed, the ABS warning light blinks while driving and the ABS system does not operate.**

HINT:
When the signal check has been completed, the ABS warning light goes off while driving and blinks in the test mode pattern while stationary.

(d) Check the VSC sensor.
(1) Check that the VSC warning light is blinking in TEST MODE and perform the check.

6. YAW RATE SENSOR CHECK (WHEN USING INTELLIGENT TESTER:)

(a) Check the VSC warning light is blinking in TEST MODE.

(b) Check the zero point voltage of the yaw rate sensor.
(1) Keep the vehicle in a stationary condition on a level surface for 1 second or more.

(c) Check the output of the yaw rate sensor and the direction of the steering angle sensor.
(1) Move the shift lever to the D position and drive the vehicle at a speed of approximately 3 mph (5 km/h), turn the steering wheel either to the left or right 90° or more until the vehicle makes a 180° turn.
(2) Stop the vehicle and move the shift lever to the P position. Check that the skid control buzzer sounds for 3 seconds.
HINT:
- If the skid control buzzer sounds, the signal check is completed normally.

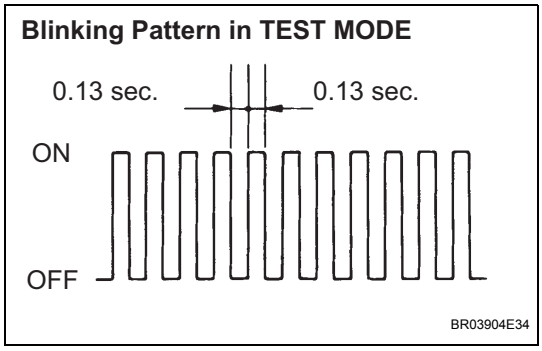

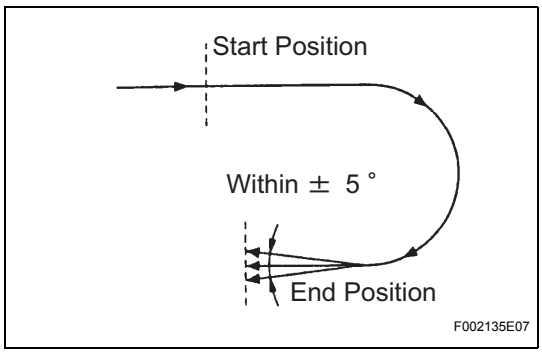

BC

- If the skid control buzzer does not sound, check the skid control buzzer circuit (See page BC-229), then perform the signal check again.
- If the skid control buzzer still does not sound, there is a malfunction in the yaw rate sensor, so check the DTC.
- Make a 180° turn. At the end of the turn, the direction of the vehicle should be within 180° +- 5° of its start position.
- Do not spin the wheels.
- Do not turn the ignition switch off while turning.
- Do not move the shift lever to the P position while turning, but change in the vehicle speed, stopping, or driving in reverse is possible.
- Complete the turn within 20 seconds.

Blinking Pattern in TEST MODE

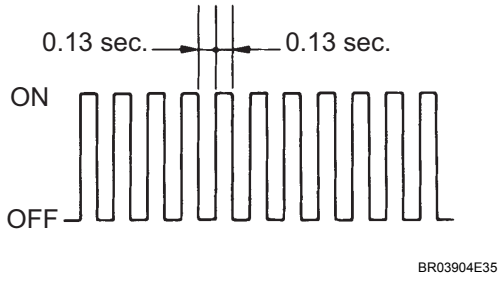

7. END OF SENSOR CHECK (WHEN USING INTELLIGENT TESTER:)

(a) If the sensor check is completed, the ABS warning light blinks (test mode) when the vehicle stops and the ABS warning light is off when the vehicle is driving.

NOTICE:

- **When the yaw rate sensor, acceleration sensor, speed sensor and master cylinder pressure sensor checks are completed, the sensor check is completed.**
- **If the sensor check is not completed, the ABS warning light blinks even while the vehicle is driving and the ABS does not operate.**

8. READ DTC OF SIGNAL CHECK FUNCTION (WHEN USING INTELLIGENT TESTER:)

(a) Read the DTC(s) by following the tester screen.

NOTICE:

- **If only the DTCs are displayed, repair the malfunction area and clear the DTCs.**
- **If the DTCs or test mode codes (DTC of signal check function) are displayed, repair the malfunction area, clear the DTCs and perform the test mode inspection.**

HINT:

See the list of DTC.

9. DTC OF TEST MODE FUNCTION (SIGNAL CHECK) (WHEN USING INTELLIGENT TESTER:)

BC

ABS sensor:

Code No.	Diagnosis	Trouble Area
C1271/71	Low output voltage of right front speed sensor	• Right front speed sensor • Sensor installation • Sensor rotor
C1272/72	Low output voltage of left front speed sensor	• Left front speed sensor • Sensor installation • Sensor rotor

Code No.	Diagnosis	Trouble Area
C1273/73	Low output voltage of right rear speed sensor	• Right rear speed sensor • Sensor installation • Sensor rotor
C1274/74	Low output voltage of left rear speed sensor	• Left rear speed sensor • Sensor installation • Sensor rotor
C1275/75	Abnormal change in output voltage of right front speed sensor	Right front sensor rotor
C1276/76	Abnormal change in output voltage of left front speed sensor	Left front speed sensor rotor
C1277/77	Abnormal change in output voltage of right rear speed sensor	Right rear sensor rotor
C1278/78	Abnormal change in output voltage of left rear speed sensor	Left rear speed sensor rotor
C1279/79	Acceleration sensor is faulty	• Yaw rate (acceleration) sensor • Sensor installation
C1281/81	Master cylinder pressure sensor output signal is faulty	• Master cylinder pressure sensor • Stop light switch

VSC sensor:

Code No.	Diagnosis	Trouble Area
C0371/71	Yaw rate sensor output signal is malfunction	Yaw rate sensor

HINT:
- The codes in this table are output only in test mode (SIGNAL CHECK).
- See the Trouble Area in the table to proceed with troubleshooting.
- After troubleshooting is completed, check that no DTCs are output.

10. SENSOR SIGNAL CHECK BY TEST MODE (SIGNAL CHECK) (WHEN USING SST CHECK WIRE:)

When having replaced the ABS & TRACTION actuator assembly and/or yaw rate and acceleration sensor, perform zero point calibration of the yaw rate and acceleration sensor.

HINT:
- If the ignition switch is turned from on (IG) to on (ACC) or off during test mode (SIGNAL CHECK), DTCs of the signal check function will be erased.
- During test mode (SIGNAL CHECK), the skid control ECU records all DTCs of the signal check function. By performing the test mode (SIGNAL CHECK), the codes are erased if normality is confirmed. The remaining codes are the codes where an abnormality was found.

(a) Procedure for test mode.
  (1) Turn the ignition switch off.
  (2) Check that the steering wheel is in the straight-ahead position and move the shift lever to the P position.

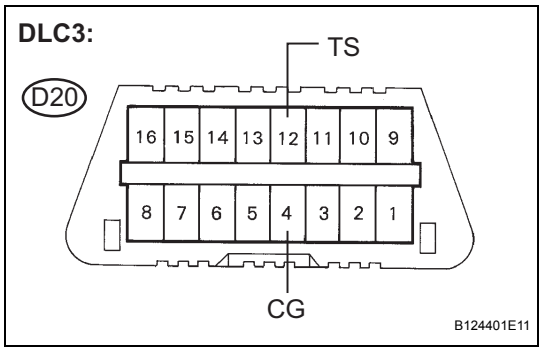

(3) Using SST, connect terminals TS and CG of the DLC3.
SST 09843-18040
(4) Turn the ignition switch on (IG).

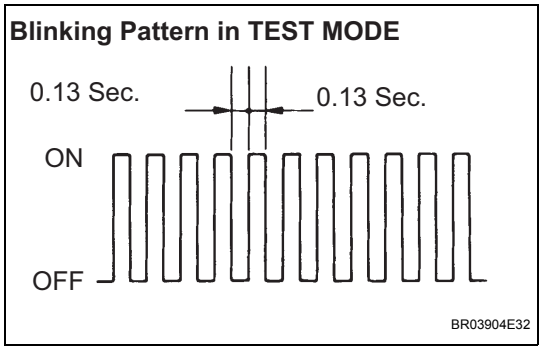

(5) Check that the ABS and VSC warning lights are blinking in TEST MODE.
HINT:
If the ABS and VSC warning lights do not blink, inspect the ABS warning light circuit and/or VSC warning light circuit.

Trouble area	See procedure
ABS warning light circuit (Remains on)	BC-202
ABS warning light circuit (Does not come on)	BC-206
VSC warning light circuit (Remains on)	BC-208
VSC warning light circuit (Does not come on)	BC-212
TS and CG terminal circuit	BC-237

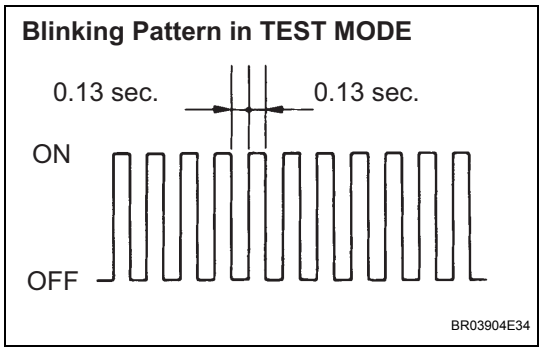

(6) Check the ABS sensor.
HINT:
Check that the ABS warning light is blinking in TEST MODE and perform the check.

11. ACCELERATION SENSOR CHECK (WHEN USING SST CHECK WIRE:)

(a) Keep the vehicle in the stationary condition on a level surface for 1 second or more.
HINT:
Acceleration sensor check can be performed with the following master cylinder pressure sensor check.

12. MASTER CYLINDER PRESSURE SENSOR CHECK (WHEN USING SST CHECK WIRE:)

(a) Leave the vehicle in a stationary condition and release the brake pedal for 1 second or more, and quickly depress the brake pedal with a force of 98 N (10 kgf, 22 lbf) or more for 1 second or more.
(b) Check that the ABS warning light stays ON for 3 seconds.
HINT:
- Ensure that the ABS warning light comes on.
- While the ABS warning light stays on, continue to depress the brake pedal with a force of 98 N (10 kgf, 22 lbf) or more.
- The ABS warning light comes on for 3 seconds every time the brake pedal operation above is performed.

13. SPEED SENSOR CHECK (WHEN USING SST CHECK WIRE:)

(a) Check the backward signal.

(1) Drive the vehicle in reverse for more than 1 second at 2 mph (3 km/h) or higher.

HINT:

Drive the vehicle in reverse and check the speed sensor signal. Note that the signal check cannot be completed if the vehicle speed is 28 mph (45 km/h) or more.

(b) Check the forward signal.

(1) Drive the vehicle straight forward.

Accelerate the vehicle to a speed of 28 mph (45 km/h) or higher for several seconds and check that the ABS warning light goes off.

HINT:

The signal check may not be completed if the vehicle has its wheels spun or the steering wheel turned during this check.

(c) Stop the vehicle.

NOTICE:

- **Before performing the speed sensor signal check, complete the acceleration sensor and master cylinder pressure sensor checks.**
- **The speed sensor signal check may not be completed if the speed sensor signal check is started while turning the steering wheel or spinning the wheels.**
- **After the ABS warning light goes off and if vehicle speed exceeds 50 mph (80 km/h), a signal check code will be stored again. Decelerate or stop the vehicle before the speed reaches 50 mph (80 km/h).**
- **If the signal check has not been completed, the ABS warning light blinks while driving and the ABS system does not operate.**

HINT:

When the signal check has been completed, the ABS warning light goes off while driving and blinks in the test mode pattern while stationary.

(d) Check the VSC sensor.

(1) Check that the VSC warning light is blinking in TEST MODE and perform the check.

14. YAW RATE SENSOR CHECK (WHEN USING SST CHECK WIRE:)

(a) Check that the VSC warning light is blinking in TEST MODE.

(b) Check the zero point voltage of the yaw rate sensor.

(1) Keep the vehicle in a stationary condition on a level surface for 1 second or more.

BC

Blinking Pattern in TEST MODE

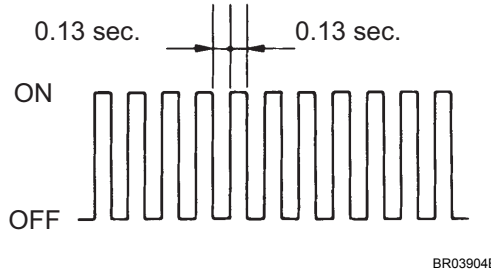

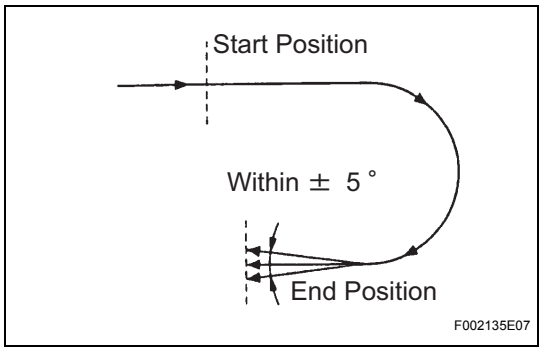

(c) Check the output of the yaw rate sensor and the direction of the steering angle sensor.
(1) Move the shift lever to the D position and drive the vehicle at a speed of approximately 3 mph (5 km/h), turn the steering wheel either to the left or right 90° or more until the vehicle makes a 180° turn.
(2) Stop the vehicle and move the shift lever to the P position. Check that the skid control buzzer sounds for 3 seconds.
HINT:
- If the skid control buzzer sounds, the signal check is completed normally.
- If the skid control buzzer does not sound, check the skid control buzzer circuit (See page BC-229), then perform the signal check again.
- If the skid control buzzer still does not sound, there is a malfunction in the yaw rate sensor, so check the DTC.
- Make a 180° turn. At the end of the turn, the direction of the vehicle should be within 180°+- 5° of its start position.
- Do not spin the wheels.
- Do not turn the ignition switch off while turning.
- Do not move the shift lever to the P position while turning, but change in the vehicle speed, stopping, or driving in reverse is possible.
- Complete the turn within 20 seconds.

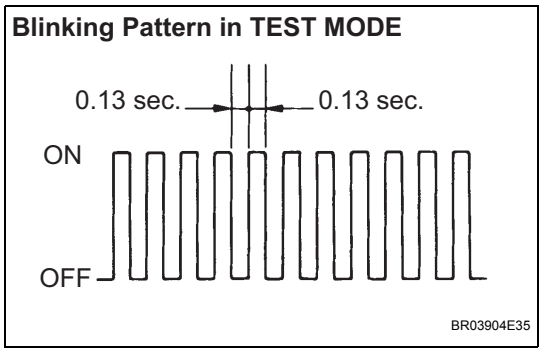

15. END OF SENSOR CHECK (WHEN USING SST CHECK WIRE:)

(a) If the sensor check is completed, the ABS warning light blinks (test mode) when the vehicle stops and the ABS warning light is off when the vehicle is driving.
NOTICE:
- **When the yaw rate sensor, acceleration sensor, speed sensor and master cylinder pressure sensor checks are completed, the sensor check is completed.**
- **If the sensor check is not completed, the ABS warning light blinks even while the vehicle is driving and the ABS does not operate.**

BC

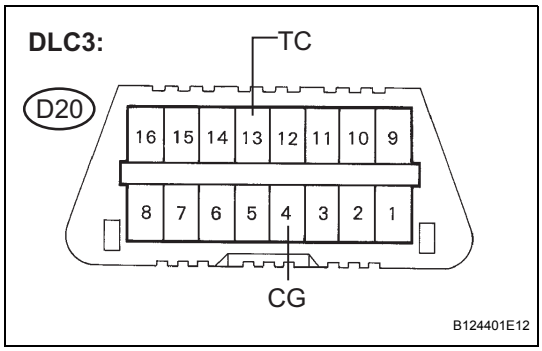

16. READ DTC OF SIGNAL CHECK FUNCTION

(a) Using SST, connect terminals TC and CG of the DLC3.
SST 09843-18040

(b) Read the number of blinks of the ABS and VSC warning lights.

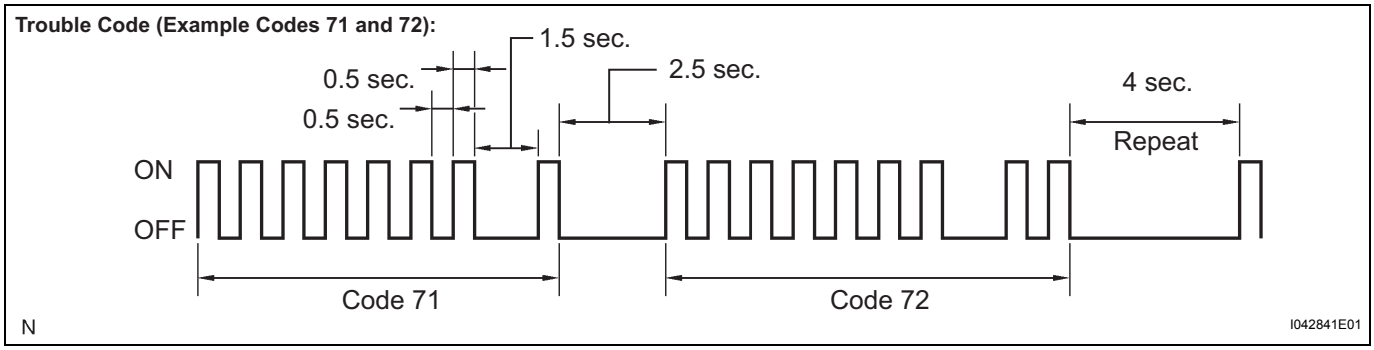

NOTICE:

- **If only the DTCs are displayed, repair the malfunction area and clear the DTCs. Check if the ABS and VSC warning lights are normal system codes.**
- **If the DTCs or test mode codes (DTC of signal check function) are displayed, repair the malfunction area, clear the DTCs and perform the test mode inspection.**

HINT:

- If more than 1 malfunction is detected at the same time, the lowest numbered code will be displayed first.
- See the list of DTC.

(c) After performing the check, disconnect the SST from terminals TS and CG , TC and CG of the DLC3 and turn the ignition switch on (IG).

(d) Turn the ignition switch on (IG).
HINT:
If the ignition switch is not turned on (IG) after the SST is removed from the DLC3, the previous TEST MODE will continue.

17. DTC OF TEST MODE FUNCTION (SIGNAL CHECK)

ABS sensor:

Code No.	Diagnosis	Trouble Area
C1271/71	Low output voltage of right front speed sensor	• Right front speed sensor • Sensor installation • Sensor rotor
C1272/72	Low output voltage of left front speed sensor	• Left front speed sensor • Sensor installation • Sensor rotor
C1273/73	Low output voltage of right rear speed sensor	• Right rear speed sensor • Sensor installation • Sensor rotor

BC

Code No.	Diagnosis	Trouble Area
C1274/74	Low output voltage of left rear speed sensor	• Left rear speed sensor • Sensor installation • Sensor rotor
C1275/75	Abnormal change in output voltage of right front speed sensor	Right front sensor rotor
C1276/76	Abnormal change in output voltage of left front speed sensor	Left front speed sensor rotor
C1277/77	Abnormal change in output voltage of right rear speed sensor	Right rear sensor rotor
C1278/78	Abnormal change in output voltage of left rear speed sensor	Left rear speed sensor rotor
C1279/79	Acceleration sensor is faulty	• Yaw rate (acceleration) sensor • Sensor installation
C1281/81	Master cylinder pressure sensor output signal is faulty	• Master cylinder pressure sensor • Stop light switch

VSC sensor:

Code No.	Diagnosis	Trouble Area
C0371/71	Yaw rate sensor output signal is malfunction	Yaw rate sensor

HINT:

- The codes in this table are output only in test mode (SIGNAL CHECK).
- See the Trouble Area in the table to proceed with troubleshooting.
- After troubleshooting is completed, check that no DTCs are output.

PROBLEM SYMPTOMS TABLE

If there are no DTCs output but the problem still occurs, check the circuits for each problem symptom in the order given in the table below and proceed to the relevant troubleshooting page.

VEHICLE STABILITY CONTROL SYSTEM

Symptom	Suspected area	See page
ABS,BA and/or EBD does not operate	1. Check the DTC again and make sure that the normal system code is output	BC-121
	2. IG power source circuit	BC-177
	3. Speed sensor circuit (Front)	BC-133
	4. Speed sensor circuit (Rear)	BC-141
	5. Check the ABS & TRACTION actuator assembly with the intelligent tester (Check ABS & TRACTION actuator assembly operation using the active test function) If abnormal, check the hydraulic circuit for leakage	BC-240
	6. If the symptoms still occur even after the above circuits in suspected areas are inspected and proved to be normal, replace the ABS & TRACTION actuator assembly (skid control ECU)	BC-241
ABS, BA and/or EBD does not operate efficiently	1. Check the DTC again and make sure that the normal system code is output	BC-121
	2. Speed sensor circuit (Front)	BC-133
	3. Speed sensor circuit (Rear)	BC-141
	4. Stop light switch circuit	BC-184
	5. Check the ABS & TRACTION actuator assembly with the intelligent tester (Check ABS & TRACTION actuator assembly operation using the active test function) If abnormal, check the hydraulic circuit for leakage	BC-240
	6. If the symptoms still occur even after the above circuits in suspected areas are inspected and proved to be normal, replace the ABS & TRACTION actuator assembly (skid control ECU)	BC-241
VSC and/or TRACTION does not operate	1. Check the DTC again and make sure that the normal system code is output	BC-121
	2. IG power source circuit and ground circuit	BC-177
	3. Check the hydraulic circuit for leakage	-
	4. Speed sensor circuit (Front)	BC-133
	5. Speed sensor circuit (Rear)	BC-141
	6. Yaw rate/Acceleration sensor circuit (Calibration Malfunction)	BC-165
	7. Yaw rate/Acceleration sensor circuit (Circuit Malfunction)	BC-173
	8. Steering sensor circuit	BC-168
	9. If the symptoms still occur even after the above circuits in suspected areas are inspected and proved to be normal, replace the ABS & TRACTION actuator assembly (skid control ECU)	BC-241
ABS sensor DTC check cannot be done	1. Check the DTC again and make sure that the normal system code is output	BC-121
	2. TC and CG terminal circuit	BC-233
	3. If the symptoms still occur even after the above circuits in suspected areas are inspected and proved to be normal, replace the ABS & TRACTION actuator assembly (skid control ECU)	BC-241

Symptom	Suspected area	See page
VSC sensor DTC check cannot be done	1. Check the DTC again and make sure that the normal system code is output	BC-121
	2. TC and CG terminal circuit	BC-233
	3. If the symptoms still occur even after the above circuits in suspected areas are inspected and proved to be normal, replace the ABS & TRACTION actuator assembly (skid control ECU)	BC-241
Sensor signal check cannot be done	1. TS and CG terminal circuit	BC-237
	2. ABS & TRACTION actuator assembly (skid control ECU)	BC-241
ABS warning light abnormal (Remains on)	1. ABS warning light circuit	BC-202
	2. ABS & TRACTION actuator assembly (skid control ECU)	BC-241
ABS warning light abnormal (Does not come on)	1. ABS warning light circuit	BC-206
	2. ABS & TRACTION actuator assembly (skid control ECU)	BC-241
VSC warning light abnormal (Remains on)	1. VSC warning light circuit	BC-208
	2. ABS & TRACTION actuator assembly (skid control ECU)	BC-241
VSC warning light abnormal (Does not come on)	1. VSC warning light circuit	BC-212
	2. ABS & TRACTION actuator assembly (skid control ECU)	BC-241
BRAKE warning light abnormal (Remains on)	1. BRAKE warning light circuit	BC-214
	2. ABS & TRACTION actuator assembly (skid control ECU)	BC-241
BRAKE warning light abnormal (Does not come on)	1. BRAKE warning light circuit	BC-221
	2. ABS & TRACTION actuator assembly (skid control ECU)	BC-241
SLIP indicator light abnormal (Remains on)	1. SLIP indicator light circuit	BC-223
	2. ABS & TRACTION actuator assembly (skid control ECU)	BC-241
SLIP indicator light abnormal (Does not come on)	1. SLIP indicator light circuit	BC-227
	2. ABS & TRACTION actuator assembly (skid control ECU)	BC-241
Skid control buzzer abnormal	1. Skid control buzzer circuit	BC-229
	2. ABS & TRACTION actuator assembly (skid control ECU)	BC-241

TERMINALS OF ECU

1. Terminals of ECU

Skid Control ECU

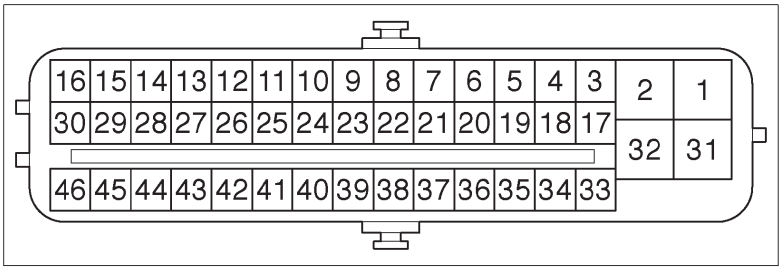

N F045080E15

Symbols (Terminal No.)	Terminal Description
GND 2 (1)	Motor ground
BM (2)	Motor relay test input
FR+ (3)	Front RH wheel speed signal input (+)
FL- (4)	Front LH wheel speed signal input (-)
RR+ (5)	Rear RH wheel speed signal input (+)
RL- (6)	Rear LH wheel speed signal input (-)
CANH (11)	Can communication line H
SP1 (12)	Speed signal output
DG (13)	Diagnostic tester communication line
MRF (14)	Fail safe motor relay output
MR (15)	Motor relay output
STPO (16)	Stop light relay output
FR- (17)	Front RH wheel speed signal input (-)
FL+ (18)	Front LH wheel speed signal input (+)
RR- (19)	Rear RH wheel speed signal input (-)
RL+ (20)	Rear LH wheel speed signal input (+)
STP2 (21)	Stop light relay output
TS (24)	Sensor check input
CANL (25)	Can communication line L
STP1 (27)	Stop light switch input
PKB (28)	Parking brake switch input
BZ (30)	Buzzer output
+BS (31)	Solenoid relay power supply
GND1 (32)	Skid control ECU ground
RRO (39)	Rear RH wheel speed signal output
RLO (40)	Rear LH wheel speed signal output
R+ (45)	Power supply for motor relay
IG1 (46)	IG1 power supply

BC

2. Terminal Inspection

(a) Disconnect the connector and measure the voltage on the wire harness side.
HINT:
Voltage cannot be measured with the connector connected to the skid control ECU as the connector is watertight.

Skid Control ECU (harness side connector front view)

A34

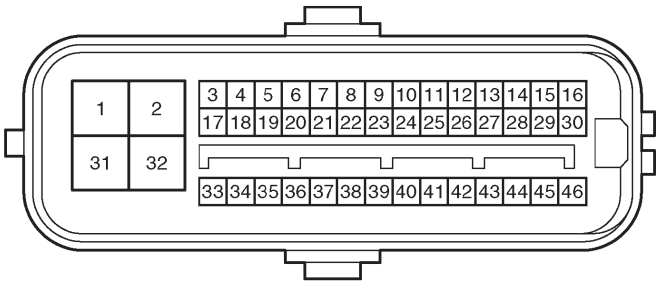

N

F049377E05

Symbols (Terminal No.)	Wining Color	Terminal Description	Condition	Specified Condition
GND2 (1) - Body ground	W-B - Body ground	Motor ground	IG switch OFF	Below 1 Ω
STP (27)- GND (1,32)	L-B - W-B	Stop light switch input	Stop light switch ON (Brake pedal pushed)	8 to 14 V
STP (27)- GND (1,32)	L-B - W-B	Stop light switch input	Stop light switch OFF (Brake pedal released)	Below 1.5 Ω
PKB (28)- GND (1,32)	V - W-B	Parking brake switch input	IG switch ON (IG), parking brake switch ON	Below 1 Ω
PKB (28)- GND (1,32)	V - W-B	Parking brake switch input	IG switch ON (IG), parking brake switch OFF	10 kΩ or higher
+BS (31)- GND (1,32)	L - W-B	Solenoid relay power supply	Always	10 to 14 V
GND1 (32) - Body ground	W-B - Body ground	Skid control ECU ground	IG switch OFF	Below 1 Ω
IG1 (46) - GND (1,32)	BR - W-B	IG1 power supply	IG switch ON (IG)	10 to 14 V

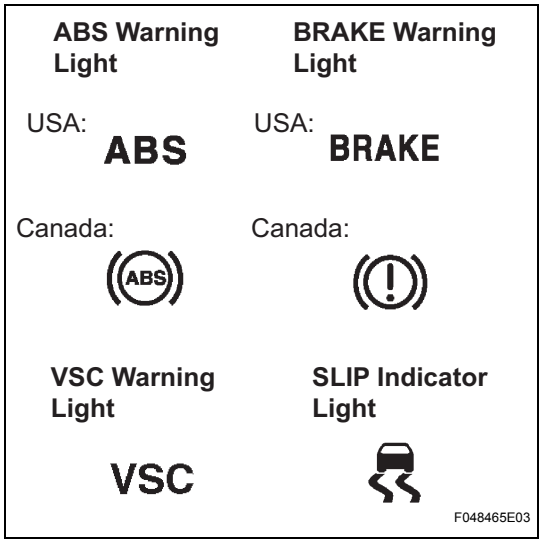

F048465E03

DIAGNOSIS SYSTEM

1. DIAGNOSIS

(a) If the skid control ECU detects a malfunction, the ABS, BRAKE, VSC warning lights and SLIP indicator light will come on to warn the driver. The table below indicates which lights will come on when there is a malfunction in a particular function.

BC

Item / Trouble Area	ABS	EBD	(Brake Assist)	TRC	VSC
ABS Warning Light	○	○	○	-	-
Brake Warning Light	-	○	-	-	-
VSC Warning Light	○	○	○	○	○
SLIP indicator Light	○	○	○	○	○

○: Light ON
-: Light OFF

- The DTCs are simultaneously stored in the memory. The DTCs can be read by connecting the SST between terminals TC and CG of the DLC3 and observing the blinking of the ABS and VSC warning lights, or by connecting the intelligent tester.
- This system has a signal check function (See page BC-107).
  The DTC can be read by connecting the intelligent tester and observing the blinking of the ABS and VSC warning lights.

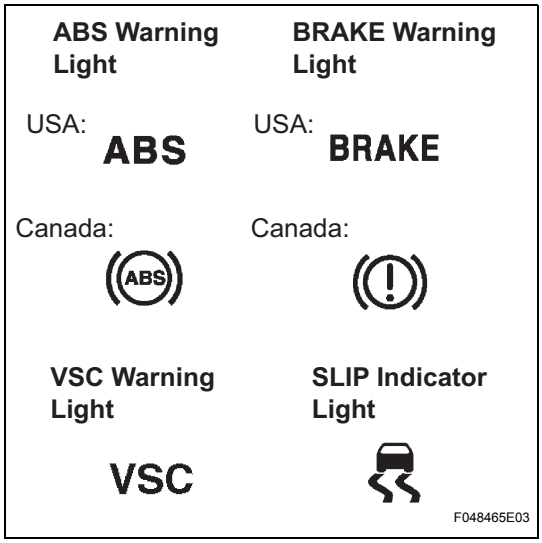

2. WARNING LIGHT AND INDICATOR LIGHT CHECK

(a) Release the parking brake.

NOTICE:

When releasing the parking brake, set chocks to hold the vehicle for safety.

HINT:

When the parking brake is applied or the level of the brake fluid is low, the brake warning light comes on.

(b) When the ignition switch is turned on (IG), check that the ABS, BRAKE, VSC warning lights and the SLIP indicator light come on for approximately 3 seconds.

HINT:

If the warning light and indicator light check result is not normal, proceed to troubleshooting for the ABS, BRAKE, VSC warning light circuits, and SLIP indicator light circuit.

If the indicator remains on , proceed to troubleshooting for the light circuit below.

Trouble Area	See procedure
ABS warning light circuit (Remains on)	BC-202
ABS warning light circuit (Does not comes on)	BC-206
VSC warning light circuit (Remains on)	BC-208
VSC warning light circuit (Does not comes on)	BC-212
BRAKE warning light (Remains on)	BC-214
BRAKE warning light (Does not come on)	BC-221
SLIP indicator light circuit (Remains on)	BC-223
SLIP indicator light circuit (Does not come on)	BC-227

BC

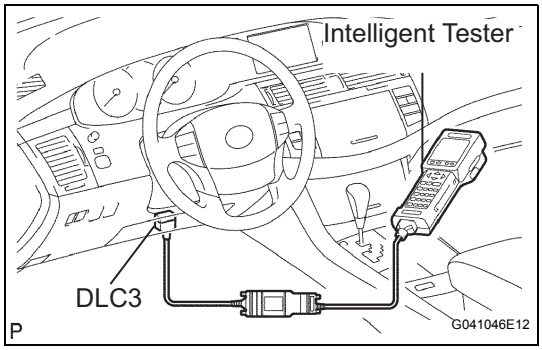

DTC CHECK / CLEAR

1. DTC CHECK/CLEAR (USING INTELLIGENT TESTER)

(a) Check DTCs.

(1) Connect the intelligent tester to the DLC3.

(2) Turn the ignition switch on (IG).

(3) Read the DTCs following the prompts on the tester screen.

HINT:

Refer to the intelligent tester operator's manual for further details.

(b) Clear the DTCs.
(1) Connect the intelligent tester to the DLC3.
(2) Turn the ignition switch on (IG).
(3) Operate the intelligent tester to clear the codes.
HINT:
Refer to the intelligent tester operator's manual for further details.

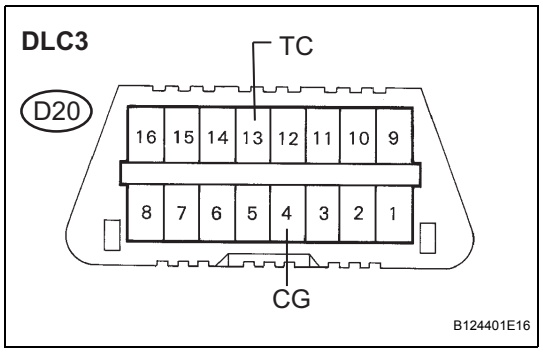

2. DTC CHECK/CLEAR (USING SST CHECK WIRE)

(a) Check DTC.
(1) Using SST, connect terminals TC and CG of the DLC3.
SST 09843-18040
(2) Turn the ignition switch on (IG).

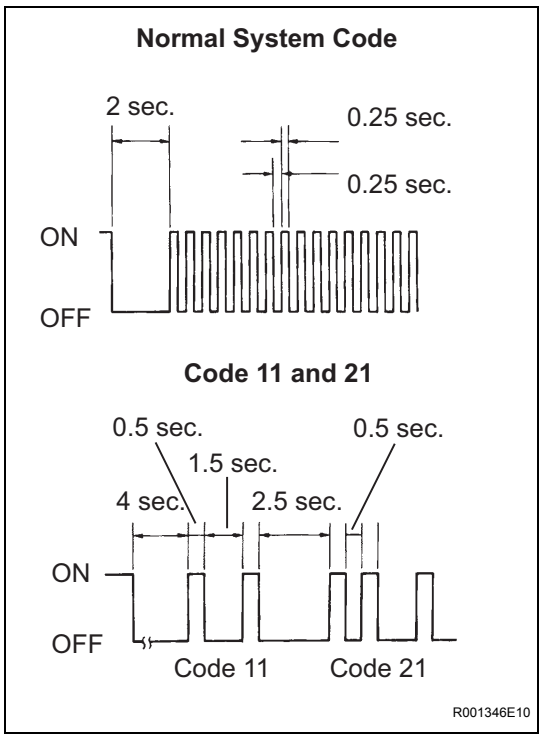

(3) Read the number of blinks of the ABS and VSC warning lights.
HINT:
- If no code appears, inspect the diagnostic circuit or ABS warning light circuit.

Trouble Area	See procedure
TC and CG terminal circuit	BC-233
ABS warning light circuit (Remains on)	BC-202
ABS warning light circuit (Does not comes on)	BC-206
VSC warning light circuit (Remains on)	BC-208
VSC warning light circuit (Does not comes on)	BC-212

- As an example, the blinking patterns for a normal system code and trouble codes 11 and 21 are shown on the left.

(4) Codes are explained in the code table (See page BC-128).
(5) After completing the check, disconnect terminals TC and CG of the DLC3, and turn off the ignition switch.
If 2 or more DTCs are detected at the same time, the DTCs will be displayed in ascending order.

BC

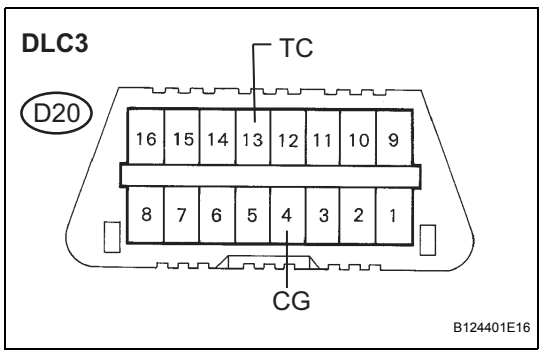

(b) Clear the DTCs.
(1) Using SST, connect terminals TC and CG of the DLC3.
SST 09843-18040
(2) Turn the ignition switch on (IG).

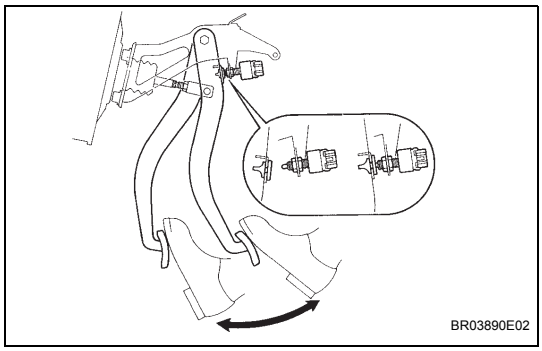

(3) Clear the DTCs stored in the ECU by depressing the brake pedal 8 times or more within 5 seconds.
(4) Check that the ABS warning light indicates a normal system code.
(5) Remove the SST.
HINT:
DTCs cannot be cleared by removing the battery cable or the ECU-IG fuse.

3. END OF CHECK/CLEAR

(a) Turn the ignition switch on (IG).
(b) Check that the ABS and VSC warning lights go off within approximately 3 seconds.

FREEZE FRAME DATA

1. FREEZE FRAME DATA

HINT:

- Whenever a DTC is detected or the ABS operates, the skid control ECU stores the current vehicle (sensor) state as freeze frame data.
- The skid control ECU stores the number of times (maximum: 31) the ignition switch has been turned from off to the on (IG) since the last time the ABS was activated. However, if the vehicle is stopped or at low speed (4.3 mph (7 km/h) or less), or if a DTC is detected, the skid control ECU will stop counting the number.
- Freeze frame data at the time the ABS operates: The skid control ECU stores and updates data whenever the ABS system operates.
  When the ECU stores data at the time a DTC is detected, the data stored during ABS operation is erased.
- Freeze frame data at the time a DTC is detected: When the skid control ECU stores data at the time a DTC is detected, no updates will be performed until the data is cleared.

(a) Connect the intelligent tester to the DLC3.
(b) Turn the ignition switch on (IG).
(c) Select "DTC INFO" on the tester display.
(d) On the DTC data display screen, select the DTC data displayed with "*".

Intelligent tester display	Measurement Item	Reference Value
TROUBLE CODE	Freeze DTC	0 to 255
SHIFT POSITION	Shift lever position	FAIL P, N R D 4 3 2 L
STOP LIGHT SW	Stop light switch signal	Stop light switch ON: ON, OFF: OFF
SYSTEM	System status	ABS activated: ABS VSC/TRC activated: VSC (TRC) BA activated: BA Fail safe mode activated: FAIL SF No system activated: NO SYS
#IG ON	Number of operation of ignition switch ON after storing freeze frame data	0 to 31
VEHICLE SPD	Wheel speed sensor reading	Min.: 0 mph (0 km/h), Max.: 202 mph (326.4 km/h)
STEERING ANG	Steering sensor reading	Min.: -1152 deg, Max.: 1143 deg
YAW RATE	Yaw rate angle sensor reading	Min.: -128 deg/s, Max.: 127deg/s
MAS CYL PRESS	Master cylinder pressure sensor reading	Brake pedal release : 0.3 to 0.9 V Brake pedal depress : 0.8 to 4.5 V
MAS PRESS GRADE	Master cylinder pressure sensor change	Min.: -30 MPa/s, Max.: 225 MPa/s
G (RIGHT & LEFT)	Right and Left G	Min.: -1.859 G, Max.: 1.859 G
G (BACK & FORTH)	Back and forth G	Min.: -1.859 G, Max.: 1.859 G
PKB SW	Parking brake switch condition	Parking brake switch ON: ON, OFF: OFF

Intelligent tester display	Measurement Item	Reference Value
#CODES	Number of trouble codes	0 to 255

FAIL-SAFE CHART

1. FAIL SAFE OPERATION

- If there is a problem with sensor signals or actuator systems, the skid control ECU prohibits power supply to the ABS & TRACTION actuator assembly and informs the ECM of VSC system failure.
  The ABS & TRACTION actuator assembly turns off each solenoid and the ECM shuts off VSC control (traction control signal) from the skid control ECU accordingly, which turns out to be as if the ABS, TRAC and VSC systems were not installed.
  The ABS control will be prohibited, but EBD control continues as much as possible. If EBD control is impossible, the BRAKE warning light comes on to warn the driver (See page BC-120).
- If system components have any malfunction before starting control, immediately stop the operation.
  If system components have any malfunction during control, gradually stop the control so as not to trigger a sudden change in vehicle conditions.
  If it is impossible to control the systems, the warning light comes on to inform the driver of termination of the systems (See page BC-120).

ABS & EBD & BA system:

Malfunction Area	Control Method
ABS system	ABS, BA, TRAC and VSC control prohibited
BA system	ABS, BA, TRAC and VSC control prohibited
EBD system	ABS, EBD, BA, TRAC and VSC control prohibited

HINT:
A malfunction in either the ABS or BA system will result in an identical operation, with ABS, BA, TRAC and VSC system control prohibited.

TRAC & VSC system:

Malfunction Area	Control Method
Engine control system (TRAC and VSC systems)	Before control: Disables control During control: Uses only the brakes to effect control
Brake control system (VSC system)	Before control: Disables control During control: Uses only the brakes to effect control
Brake control system (TRAC systems)	Before control: Disables control During control: Disables control (by gradually ending control)

DATA LIST / ACTIVE TEST

1. DATA LIST

HINT:

With the intelligent tester connected to the DLC3 and the ignition switch on (IG), the ABS, TRAC and VSC data list can be displayed. Follow the prompts on the intelligent tester screen to access the DATA LIST.

Item	Measurement Item / Range (Display)	Normal Condition	Diagnostic Note
ABS MOT RELAY	ABS motor relay / ON or OFF	ON: Motor relay ON OFF: Motor relay OFF	-
SOL RELAY	Solenoid relay / ON or OFF	ON: Solenoid relay ON OFF: Solenoid relay OFF	-
IDLE SW	Main idle switch / ON or OFF	ON: Accelerator pedal released OFF: Accelerator pedal depressed	-
STOP LIGHT SW	Stop light switch / ON or OFF	ON: Brake pedal depressed OFF: Brake pedal released	-
PKB SW	Parking brake switch / ON or OFF	ON: Parking brake applied OFF: Parking brake released	-
ABS OPERT FR	ABS operation (FR) / BEFORE or OPERATE	BEFORE: No ABS operation (FR) OPERATE: During ABS operation (FR)	-
ABS OPERT FL	ABS operation (FL) / BEFORE or OPERATE	BEFORE: No ABS operation (FL) OPERATE: During ABS operation (FL)	-
ABS OPERT RR	ABS operation (RR) / BEFORE or OPERATE	BEFORE: No ABS operation (RR) OPERATE: During ABS operation (RR)	-
ABS OPERT RL	ABS operation (RL) / BEFORE or OPERATE	BEFORE: No ABS operation (RL) OPERATE: During ABS operation (RL)	-
WHEEL SPD FR	Wheel speed sensor (FR) reading / min.: 0 mph (0 km/h), max.: 202 mph (326 km/h)	Actual wheel speed	Similar speed as indicated on speedometer
WHEEL SPD FL	Wheel speed sensor (FL) reading / min.: 0 mph (0 km/h), max.: 202 mph (326 km/h)	Actual wheel speed	Similar speed as indicated on speedometer
WHEEL SPD RR	Wheel speed sensor (RR) reading / min.: 0 mph (0 km/h), max.: 202 mph (326 km/h)	Actual wheel speed	Similar speed as indicated on speedometer
WHEEL SPD RL	Wheel speed sensor (RL) reading / min.: 0 mph (0 km/h), max.: 202 mph (326 km/h)	Actual wheel speed	Similar speed as indicated on speedometer
DECELERAT SEN	Acceleration sensor 1 reading / min.: -1.869 G, max.: 1.869 G	Approximately 0 +- 0.13 G while stationary	Reading changes when vehicle is bounced
DECELERAT SEN2	Acceleration sensor 2 reading / min.: -1.869 G, max.: 1.869 G	Approximately 0 +- 0.13 G while stationary	Reading changes when vehicle is bounced
IG VOLTAGE	ECU power supply voltage / TOO LOW / NORMAL / TOO HIGH	TOO HIGH: 14.0 V or more NORMAL: 9.5 V to 14.0 V TOO LOW: 9.5 V or less	-
SFRR	ABS solenoid (SFRR) / ON or OFF	ON: Operates OFF: Does not operate	-
SFRH	ABS solenoid (SFRH) / ON or OFF	ON: Operates OFF: Does not operate	-
SFLR	ABS solenoid (SFLR) / ON or OFF	ON: Operates OFF: Does not operate	-

Item	Measurement Item / Range (Display)	Normal Condition	Diagnostic Note
SFLH	ABS solenoid (SFLH) / ON or OFF	ON: Operates OFF: Does not operate	-
SRRR (SRR)	ABS solenoid (SRRR (SRR)) / ON or OFF	ON: Operates OFF: Does not operate	-
SRRH (SRH)	ABS solenoid (SRRH (SRH)) / ON or OFF	ON: Operates OFF: Does not operate	-
SRLR	ABS solenoid (SRLR) / ON or OFF	ON: Operates OFF: Does not operate	-
SRLH	ABS solenoid (SRLH) / ON or OFF	ON: Operates OFF: Does not operate	-
SMF (BA-SOL)	TRC solenoid (SMF) / ON or OFF	ON: Operates OFF: Does not operate	-
SMR	TRC solenoid (SMR) / ON or OFF	ON: Operates OFF: Does not operate	-
ENGINE SPD	Engine speed / min.: 0 rpm max.: 6000 rpm	Actual engine speed	-
VEHICLE SPD	Maximum wheel speed sensor reading / min.: 0 mph(0 km/h), max.: 202 mph (326 km/h)	Actual vehicle speed	Speed indicated on speedometer
YAW RATE	Yaw rate sensor/ Min.: -128 deg/s, Max.: 127 deg/s	Min.: -128 deg/s Max.: 127 deg/s	-
YAW ZERO VALUE	Memorized zero value/ Min.: -128 deg/s, Max.: 127 deg/s	Min.: -128 deg/s Max.: 127 deg/s	-
STEERING ANG	Steering sensor/ Min.: -1152 deg, , Max.: 1150.875 deg	Left turn: Increase Right turn: Decrease	-
MAS CYL PRS1	Master cylinder pressure sensor 1 reading / min.: 0 V, Max.: 5 V	When brake pedal is released : 0.3 to 0.9 V	Reading increases when brake pedal is depressed
ACCELERATOR %	The difference of a present accelerator / min.: 0 %, max.: 128%	-	-
TORQUE	Real output torque / min.: -1024, max.: 1016 N*m	-	-
TEST MODE	Test mode / NORMAL or TEST	NORMAL: Normal mode TEST: During test mode	-
SPD SEN FR	FR speed sensor open detection / OPN DET or NORMAL	OPN DET: Momentary interruption NORMAL: Normal	-
SPD SEN FL	FL speed sensor open detection / OPN DET or NORMAL	OPN DET: Momentary interruption NORMAL: Normal	-
SPD SEN RR	RR speed sensor open detection / OPN DET or NORMAL	OPN DET: Momentary interruption NORMAL: Normal	-
SPD SEN RL	RL speed sensor open detection / OPN DET or NORMAL	OPN DET: Momentary interruption NORMAL: Normal	-
EFI COM	EFI communication open detection / OPN DET or NORMAL	OPN DET: Momentary interruption NORMAL: Normal	-
YAWRATE SEN	Yaw rate sensor open detection / OPN DET or NORMAL	OPN DET: Momentary interruption NORMAL: Normal	-
DESELE SEN	G sensor open detection / OPN DET or NORMAL	OPN DET: Momentary interruption NORMAL: Normal	-
STEERING SEN	Steering sensor open detection / OPN DET or NORMAL	OPN DET: Momentary interruption NORMAL: Normal	-

Item	Measurement Item / Range (Display)	Normal Condition	Diagnostic Note
M/C SEN1	Master cylinder pressure sensor 1 open detection / OPN DET or NORMAL	OPN DET: Momentary interruption NORMAL: Normal	-
INSPECTION MODE	Inspection mode condition / INSPECT or OTHER	INSPECT: During inspect OTHER: No inspect mode	-
#IG ON2	Number of IG ON (Inspection mode) / min.: 0, max.:255	0 to 255	

2. ACTIVE TEST

HINT:

Performing the ACTIVE TEST using the intelligent tester allows the relay, actuator, etc. to operate without removing any parts. Performing the ACTIVE TEST as the first step of troubleshooting is one of the methods to shorten labor time.

It is possible to display the DATA LIST during the ACTIVE TEST.

(a) Connect the intelligent tester to the DLC3.

(b) Turn the ignition switch on (IG).

(c) According to the display on the tester, perform the "ACTIVE TEST".

HINT:

The ignition switch must be turned on (IG) to proceed to the ACTIVE TEST using the intelligent tester.

Item	Vehicle Condition / Test Details	Diagnostic Note
SFRR	Turns ABS solenoid (SFRR) ON / OFF	Operating sound of solenoid (clicking sound) is heard
SFRH	Turns ABS solenoid (SFRH) ON / OFF	Operating sound of solenoid (clicking sound) is heard
SFLR	Turns ABS solenoid (SFLR) ON / OFF	Operating sound of solenoid (clicking sound) is heard
SFLH	Turns ABS solenoid (SFLH) ON / OFF	Operating sound of solenoid (clicking sound) is heard
SRRR	Turns ABS solenoid (SRRR) ON / OFF	Operating sound of solenoid (clicking sound) is heard
SRRH	Turns ABS solenoid (SRRH) ON / OFF	Operating sound of solenoid (clicking sound) is heard
SRLR	Turns ABS solenoid (SRLR) ON / OFF	Operating sound of solenoid (clicking sound) is heard
SRLH	Turns ABS solenoid (SRLH) ON / OFF	Operating sound of solenoid (clicking sound) is heard
SMF (BA-SOL)	Turns TRC solenoid (SRLH) ON / OFF	Operating sound of solenoid (clicking sound) is heard
SMR	Turns TRC solenoid SMR ON / OFF	Operating sound of solenoid (clicking sound) is heard
SFRR & SFRH	Turns ABS solenoid SFRR & SFRH ON / OFF	Operating sound of solenoid (clicking sound) is heard
SFLR & SFLH	Turns ABS solenoid SFLR & SFLH ON / OFF	Operating sound of solenoid (clicking sound) is heard
SRH & SRR	Turns ABS solenoid SRRR & SRRH ON / OFF	Operating sound of solenoid (clicking sound) is heard
SRLR & SRLH	Turns ABS solenoid SRLR & SRLH ON / OFF	Operating sound of solenoid (clicking sound) is heard
SFRH & SFLH	Turns ABS solenoid SFRH & SFLH ON / OFF	Operating sound of solenoid (clicking sound) is heard

Item	Vehicle Condition / Test Details	Diagnostic Note
SOL RELAY	Turns ABS solenoid relay ON / OFF	Operating sound of relay (clicking sound) is heard
ABS MOT RELAY	Turns ABS motor relay ON / OFF	Operating sound of relay (clicking sound) is heard
ABS WARN LIGHT	Turns ABS warning light ON / OFF	Observe combination meter
VSC WARN LIGHT	Turns VSC warning light ON / OFF	Observe combination meter
SLIP INDI LIGHT	Turns SLIP indicator light ON / OFF	Observe combination meter
BRAKE WARN LIGHT	Turns BRAKE warning light ON / OFF	Observe combination meter
VSC/BR WARN BUZ	Turns VSC / BRAKE warning buzzer ON / OFF	Buzzer is heard
STOP LIGHT RELAY	Turns stop light ON / OFF	Stop light comes on

DIAGNOSTIC TROUBLE CODE CHART

HINT:
If a DTC is displayed during the DTC check, check the circuit indicated by the DTC. For details of each code, refer to the "See page" in the DTC chart.

DTC chart of ABS:

DTC No.	Detection Item	Trouble Area	See page
C0200/31 (*1)	Right Front Wheel Speed Sensor Signal Malfunction	1. Right front speed sensor 2. Speed sensor circuit 3. Sensor rotor 4. Sensor installation 5. ABS & TRACTION actuator assembly (Skid control ECU)	BC-133
C0205/32 (*1)	Left Front Wheel Speed Sensor Signal	1. Left front speed sensor 2. Speed sensor circuit 3. Sensor rotor 4. Sensor installation 5. ABS & TRACTION actuator assembly (Skid control ECU)	BC-133
C0210/33 (*1)	Right Rear Wheel Speed Sensor Signal Malfunction	1. Right rear speed sensor 2. Speed sensor circuit 3. Sensor rotor 4. Sensor installation 5. ABS & TRACTION actuator assembly (Skid control ECU)	BC-141
C0215/34 (*1)	Left Rear Wheel Speed Sensor Signal	1. Left rear speed sensor 2. Speed sensor circuit 3. Sensor rotor 4. Sensor installation 5. ABS & TRACTION actuator assembly (Skid control ECU)	BC-141
C0226/21	SFR Solenoid Circuit	ABS & TRACTION actuator assembly (Solenoid circuit)	BC-149
C0236/22	SFL Solenoid Circuit	ABS & TRACTION actuator assembly (Solenoid circuit)	BC-149
C0246/23	SRR Solenoid Circuit	ABS & TRACTION actuator assembly (Solenoid circuit)	BC-149
C0256/24	SRL Solenoid Circuit	ABS & TRACTION actuator assembly (Solenoid circuit)	BC-149
C0273/13 (*1)	Open in ABS Motor Relay Circuit	1. ABS/VSC No.1 fuse 2. VSC No.1 relay 3. VSC No.1 relay circuit 4. ABS & TRACTION actuator assembly	BC-152
C0274/14	Short to B+ in ABS Motor Relay Circuit	1. ABS/VSC No.1 fuse 2. VSC No.1 relay 3. VSC No.1 relay circuit 4. ABS & TRACTION actuator assembly	BC-152
C0278/11	Open in ABS Solenoid Relay Circuit	1. ABS/VSC No.2 fuse 2. ABS & TRACTION actuator (Solenoid relay circuit)	BC-158
C0279/12	Short to B+ in ABS Solenoid Relay Circuit	1. ABS/VSC No.2 fuse 2. ABS & TRACTION actuator (Solenoid relay circuit)	BC-158
C1225/25	SM Solenoid Circuit	ABS & TRACTION actuator assembly (Solenoid circuit)	BC-149
C1235/35	Foreign Object is Attached on Tip of Front Speed Sensor RH	1. Right front speed sensor 2. Sensor rotor 3. Sensor installation 4. ABS & TRACTION actuator assembly (Skid control ECU)	BC-133

DTC No.	Detection Item	Trouble Area	See page
C1236/36	Foreign Object is Attached on Tip of Front Speed Sensor LH	1. Left front speed sensor 2. Sensor rotor 3. Sensor installation 4. ABS & TRACTION actuator assembly (Skid control ECU)	BC-133
C1238/38	Foreign Object is Attached on Tip of Rear Speed Sensor RH	1. Right rear speed sensor 2. Sensor rotor 3. Sensor installation 4. ABS & TRACTION actuator assembly (Skid control ECU)	BC-141
C1239/39	Foreign Object is Attached on Tip of Rear Speed Sensor LH	1. Left rear speed sensor 2. Sensor rotor 3. Sensor installation 4. ABS & TRACTION actuator assembly (Skid control ECU)	BC-141
C1241/41	Low Battery Positive Voltage or Abnormally High Battery Positive Voltage	1. Battery 2. Charging system 3. Power source circuit 4. Internal power supply circuit of the skid control ECU	BC-177
C1243/43 (*1)	Acceleration Sensor Stuck Malfunction	1. Yaw rate and acceleration sensor 2. Yaw rate and acceleration sensor circuit	BC-173
C1244/44	Open or Short in Deceleration Sensor Circuit	1. Yaw rate and acceleration sensor 2. Yaw rate and acceleration sensor circuit	BC-173
C1245/45 (*1)	Acceleration Sensor Output Malfunction	1. Yaw rate and acceleration sensor 2. Yaw rate and acceleration sensor circuit	BC-173
C1246/46 (*2)	Master Cylinder Pressure Sensor Malfunction	1. Master cylinder pressure sensor 2. Master cylinder pressure sensor circuit 3. Stop light switch circuit 4. ABS & TRACTION actuator assembly	BC-181
C1249/49	Open in Stop Light Switch Circuit	1. Stop light switch 2. Stop light switch circuit 3. ABS & TRACTION actuator assembly	BC-184
C1251/51 (*1)	Open in Pump Motor Circuit	1. ABS & TRACTION actuator assembly (GND circuit) 2. ABS & TRACTION actuator assembly (Motor circuit)	BC-195
C1361/91	Short Circuit in ABS Motor Fail Safe Relay Circuit	1. ABS/VSC No.1 fuse 2. VSC No.2 relay 3. VSC No.2 relay circuit 4. ABS & TRACTION actuator assembly	BC-152
C1381/97	Yaw Rate and / or Acceleration Sensor Power Supply Voltage Malfunction	1. Yaw rate and acceleration sensor 2. Yaw rate and acceleration sensor power source circuit	BC-173
U0073/94	Control Module Communication Bus OFF	CAN communication system	BC-199
U0124/95	Lost Communication with Lateral Acceleration Sensor Module	CAN communication system (Skid control ECU to yaw rate and acceleration sensor)	BC-199

*1, *2:

Even after the trouble areas are repaired, the ABS warning light will not go off unless the following operations are performed.

- *1:
  (a) Drive the vehicle at 12 mph (20 km/h) for 30 seconds or more and check that the ABS warning light goes off.
  (b) Clear the DTC.
- *2:
  (a) Keep the vehicle in the stationary condition for 5 seconds or more and depress the brake pedal lightly 2 or 3 times.
  (b) Drive the vehicle at the vehicle speed of 31 mph (50 km/h) and keep depressing the brake pedal strongly for approximately 3 seconds.
  (c) Repeat the above operation 3 times or more and check that the ABS warning light goes off.
  (d) Clear the DTC.

HINT:
In some cases, the intelligent tester cannot be used when the ABS warning light remains on.

DTC chart of VSC:

DTC No.	Detection Item	Trouble Area	See page
C1201/51	Engine Control System Malfunction	Engine control system	BC-162
C1203/53	ECM Communication Circuit Malfunction	ECM	BC-164
C1210/36	Zero Point Calibration of Yaw Rate Sensor Undone	1. ABS & TRACTION actuator assembly (Skid control ECU) 2. Zero point calibration undone	BC-165
C1223/43	ABS Control System Malfunction	ABS control system	BC-167
C1231/31	Steering Angle Sensor Circuit Malfunction	1. Steering angle sensor 2. Steering angle sensor circuit 3. Steering angle sensor power supply 4. CAN communication system	BC-168
C1232/32	Stuck in Deceleration Sensor	1. Yaw rate and acceleration sensor 2. Yaw rate and acceleration sensor circuit	BC-173
C1234/34	Yaw Rate Sensor Malfunction	1. Yaw rate and acceleration sensor 2. Yaw rate and acceleration sensor circuit	BC-173
C1336/39	Zero Point Calibration of Acceleration Sensor Undone	1. ABS & TRACTION actuator assembly (Skid control ECU) 2. Zero point calibration undone	BC-165
U0100/65	Lost Communication with ECM / PCM	CAN communication system (Skid control ECU to ECM)	BC-199
U0123/62	Lost Communication with Yaw Rate Sensor Module	CAN communication system (Skid control ECU to yaw rate and acceleration sensor)	BC-199
U0126/63	Lost Communication with Steering Angle Sensor Module	CAN communication system (Skid control ECU to steering angle sensor)	BC-199

HINT:
In some cases, the intelligent tester cannot be used when the VSC warning light remains on.

Test Mode DTC of ABS:

DTC No.	Detection Item	Trouble Area	See page
C1271/71	Low Output Signal of Front Speed Sensor RH (Test Mode DTC)	1. Right front speed sensor 2. Sensor installation 3. Sensor rotor	BC-133
C1272/72	Low Output Signal of Front Speed Sensor LH (Test Mode DTC)	1. Left front speed sensor 2. Sensor installation 3. Sensor rotor	BC-133
C1273/73	Low Output Signal of Rear Speed Sensor RH (Test Mode DTC)	1. Right rear speed sensor 2. Sensor installation 3. Sensor rotor	BC-141
C1274/74	Low Output Signal of Rear Speed Sensor LH (Test Mode DTC)	1. Left rear speed sensor 2. Sensor installation 3. Sensor rotor	BC-141
C1275/75	Abnormal Change in Output Signal of Front Speed Sensor RH (Test Mode DTC)	Right front sensor rotor	BC-133
C1276/76	Abnormal Change in Output Signal of Front Speed Sensor LH (Test Mode DTC)	Left front speed sensor rotor	BC-133
C1277/77	Abnormal Change in Output Signal of Rear Speed Sensor RH (Test Mode DTC)	Right rear sensor rotor	BC-141
C1278/78	Abnormal Change in Output Signal of Rear Speed Sensor LH (Test Mode DTC)	Left rear speed sensor rotor	BC-141
C1279/79	Deceleration Sensor Output Voltage Malfunction (Test Mode DTC)	1. Yaw rate (acceleration) sensor 2. Sensor installation	BC-173
C1281/81	Master Cylinder Pressure Sensor Output Malfunction (Test Mode DTC)	1. Master cylinder pressure sensor 2. Stop light switch	BC-181

Test Mode DTC of VSC:

DTC No.	Detection Item	Trouble Area	See page
C0371/71	Yaw Rate Sensor (Test Mode DTC)	Yaw rate sensor	BC-173

DTC	C0200/31	Right Front Wheel Speed Sensor Signal Malfunction
DTC	C0205/32	Left Front Wheel Speed Sensor Signal
DTC	C1235/35	Foreign Object is Attached on Tip of Front Speed Sensor RH
DTC	C1236/36	Foreign Object is Attached on Tip of Front Speed Sensor LH
DTC	C1271/71	Low Output Signal of Front Speed Sensor RH (Test Mode DTC)
DTC	C1272/72	Low Output Signal of Front Speed Sensor LH (Test Mode DTC)
DTC	C1275/75	Abnormal Change in Output Signal of Front Speed Sensor RH (Test Mode DTC)
DTC	C1276/76	Abnormal Change in Output Signal of Front Speed Sensor LH (Test Mode DTC)

DESCRIPTION

The speed sensor detects wheel speed and transmits the appropriate signals to the skid control ECU. These signals are used for control of the ABS system. Each of the front and rear rotors has 48 serrations. When the rotors rotate, the magnetic field generated by the permanent magnet in the speed sensor induces AC voltage. Since the frequency of this AC voltage changes in direct proportion to the speed of the rotor, the frequency is used by the skid control ECU to detect the speed of each wheel.
DTCs C1271/71, C1272/72, C1275/75 and C1276/76 are output only in the test mode (SIGNAL CHECK).

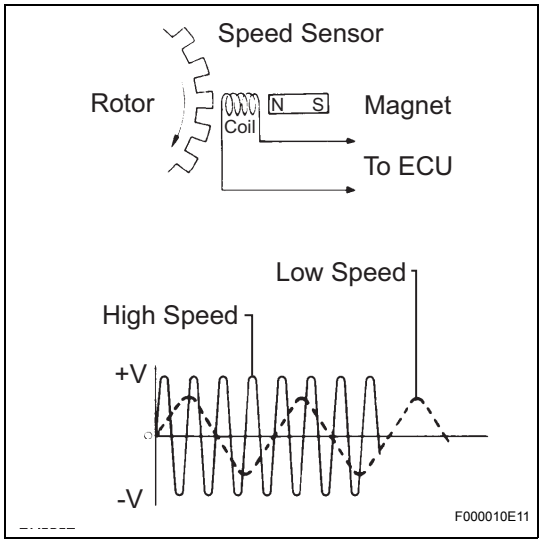

BC

DTC No.	DTC Detecting Condition	Trouble Area
C0200/31 C0205/32	When any if the following (1 to 3) is detected: 1. All of the following conditions continue for at least 1 second. – Vehicle speed is more than 6 mph (10 km/h). – Open or short in the vehicle speed sensor signal circuit. 2. Momentary interruption of the sensor signal from the abnormally wheel has occurred 7 times or more. 3. The speed sensor signal circuit is open for 0.5 sec. or more.	• Right front and left front speed sensor • Each speed sensor circuit • Sensor rotor • Sensor installation • ABS & TRACTION actuator assembly (Skid control ECU)
C1235/35 C1236/36	At a vehicle speed of 12 mph (20 km/h) or more, noise occurs in the sensor signal from the abnormal wheel for 5 seconds or more.	• Speed sensor • Sensor rotor • Sensor installation • ABS & TRACTION actuator assembly (Skid control ECU)

HINT:
DTC No.C0200/31 and C1235/35 are for the front speed sensor RH.
DTC No.C0205/32 and C1236/36 are for the front speed sensor LH.

WIRING DIAGRAM

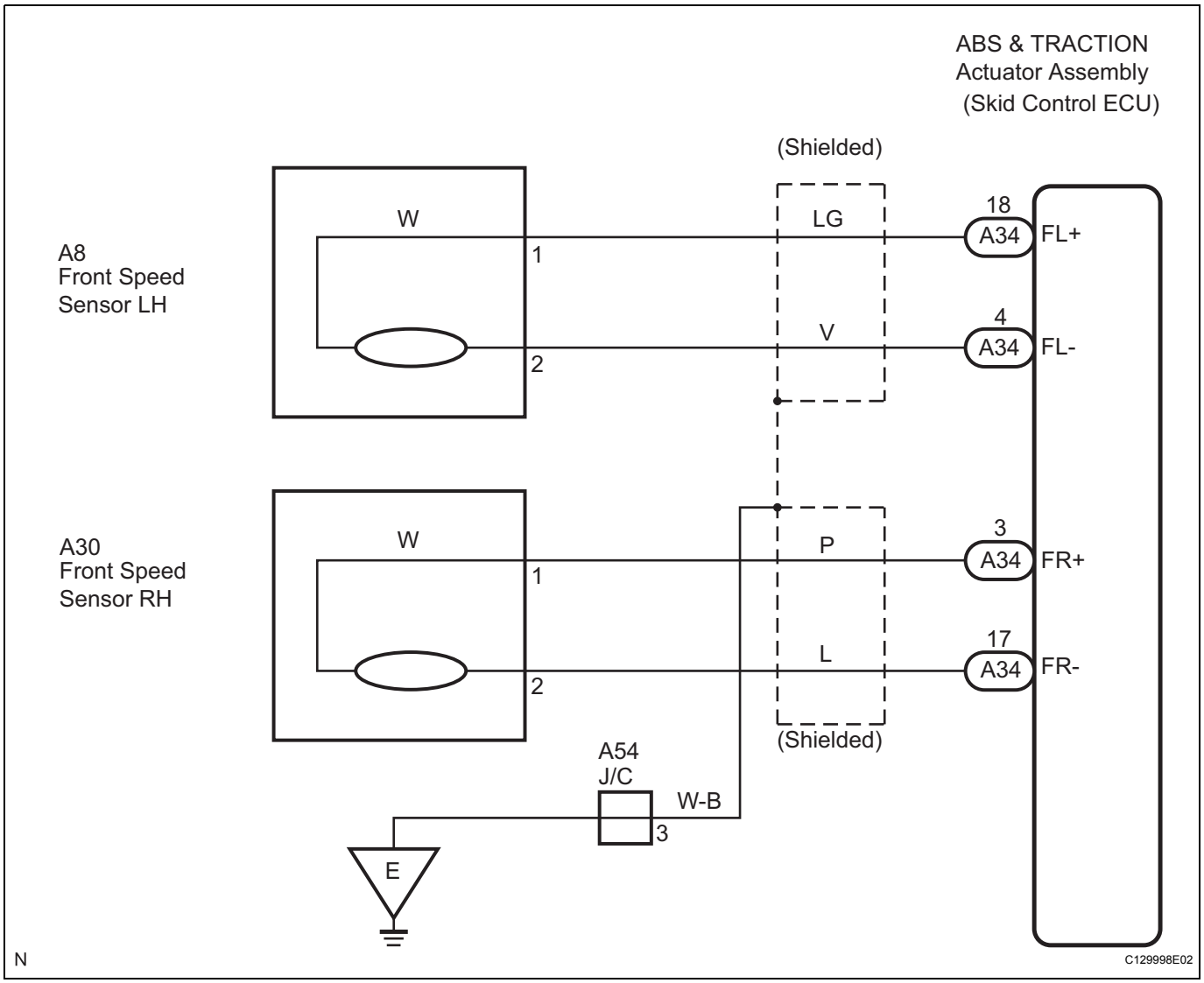

BC

INSPECTION PROCEDURE

NOTICE:

When replacing the ABS & TRACTION actuator assembly, perform zero point calibration (See page BC-104).

HINT:

Start the inspection from step 1 when using the intelligent tester and start from step3 when not using the intelligent tester.

1	CHECK HARNESS AND CONNECTOR (MOMENTARY INTERRUPTION)

(a) Using the intelligent tester, check for any momentary interruption in the wire harness and connector corresponding to a DTC (See page BC-103).

DATA LIST: ABS/VSC

Item	Measurement Item / Range (Display)	Normal Condition
SPD SEN FR	FR speed sensor open detection / OPN DET or NORMAL	OPN DET: Momentary interruption NORMAL: Normal
SPD SEN FL	FL speed sensor open detection / OPN DET or NORMAL	OPN DET: Momentary interruption NORMAL: Normal

OK:

There are no momentary interruptions.

HINT:

Perform the above inspection before removing the sensor and connector.

NG → **CHECK AND REPAIR HARNESS AND CONNECTOR (SPEED SENSOR CIRCUIT)**

OK

2	READ VALUE OF INTELLIGENT TESTER (FRONT SPEED SENSOR)

(a) Connect the intelligent tester to the DLC3.

(b) Start the engine.

(c) Select "DATA LIST" and read the value displayed on the intelligent tester.

DATA LIST: ABS/VSC

Item	Measurement Item / Range (Display)	Normal condition
WHEEL SPD FR	Wheel speed sensor (FR) reading / min.: 0 km/h (0 MPH), max.: 326 km/h (202 MPH)	Actual wheel speed
WHEEL SPD FL	Wheel speed sensor (FL) reading / min.: 0 km/h (0 MPH), max.: 326 km/h (202 MPH)	Actual wheel speed

BC

(d) Check that there is no difference between the speed value output from the speed sensor displayed on the intelligent tester and the speed value displayed on the speedometer when driving the vehicle.

OK:

The speed value output from the speed sensor displayed on the intelligent tester is the same as the actual vehicle speed.

NG → **Go to step 6**

OK

3	PERFORM TEST MODE (SIGNAL CHECK)

(a) Check if test mode (signal check) DTCs are detected.

Result

Result	Proceed to
Test mode (signal check) DTC is not output	A
Test mode (signal check) DTC is output	B

B → **Go to step 6**

A

4	INSPECT SPEED SENSOR AND SENSOR ROTOR SERRATIONS

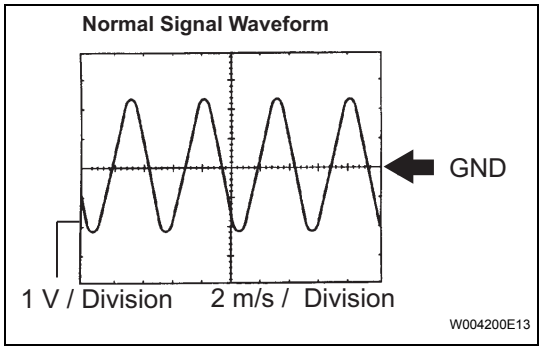

(a) INSPECTION USING OSCILLOSCOPE
(1) Disconnect the front speed sensor connector.
(2) Connect the oscilloscope to terminals 1 and 2 of the front speed sensor.
(3) Check that a waveform is output when the tires are rotated.
OK:
A waveforms as shown in the figure should be output.
HINT:
- As vehicle speed (wheel rotation speed) increases, the width of the waveform narrows and the fluctuation in the output voltage becomes greater.
- When noise is identified in the waveform on the oscilloscope, error signals are generated due to rotor scratches, looseness or foreign matter attached to the speed sensor.

NG → **Go to step 12**

OK

5	RECONFIRM DTC

(a) Clear the DTC.
(b) Start the engine.
(c) Drive the vehicle at the speed of 20 mph (32 km/h) or more for 60 seconds or more.
(d) Check that the same DTC is recorded.

Result

Result	Proceed to
DTC is not output	A
DTC is output	B

BC

HINT:
- These DTCs may be stored due to a malfunction in the connector terminal connection, etc.
- If troubleshooting has been carried out according to the PROBLEM SYMPTOMS TABLE, refer back to the table and proceed to the next step (See page BC-117).

B → Go to step 6

A

END

6 INSPECT FRONT SPEED SENSOR INSTALLATION

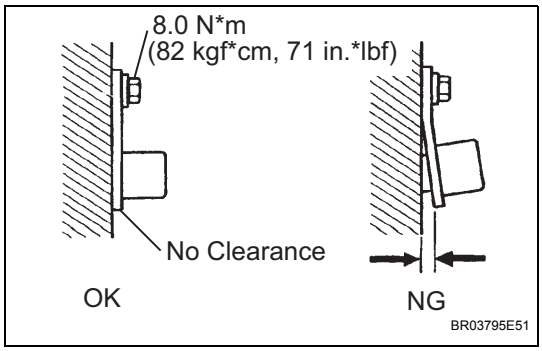

(a) Check the front speed sensor installation.

OK:

The installation bolt is tightened properly.
There is no clearance between the sensor and front steering knuckle.

Torque: 8.0 N*m (82 kgf*cm, 71 in.*lbf)

NOTICE:

Check the speed sensor signal after replacement (See page BC-107).

NG → **INSTALL FRONT SPEED SENSOR CORRECTLY OR REPLACE FRONT SPEED SENSOR**

OK

7 INSPECT FRONT SPEED SENSOR

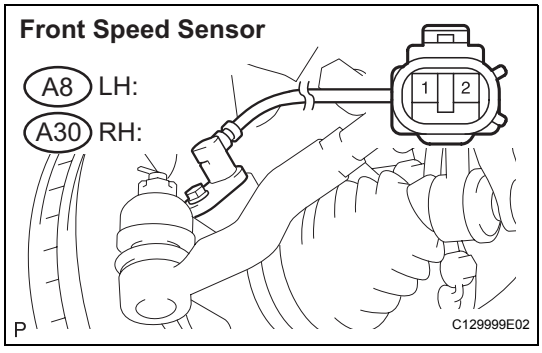

(a) Make sure that there is no looseness at the locking part and connecting part of the connectors.
(b) Disconnect the front speed sensor connectors.
(c) Measure the resistance according to the value(s) in the table below.

Resistance:

LH

Tester Connection	Specified Condition
A8-1 (FL+) - A8-2 (FL-)	1.22 to 0.92 kΩ
A8-1 (FL+) - Body ground	10 kΩ or higher
A8-2 (FL-) - Body ground	10 kΩ or higher

RH

Tester Connection	Specified Condition
A30-1 (FR+) - A30-2 (FR-)	1.22 to 0.92 kΩ
A30-1 (FR+) - Body ground	10 kΩ or higher
A30-2 (FR-) - Body ground	10 kΩ or higher

BC

NOTICE:
Check the speed sensor signal after replacement (See page BC-107).

NG → **REPLACE FRONT SPEED SENSOR**

OK

8 CHECK HARNESS AND CONNECTOR (FRONT SPEED SENSOR TO SKID CONTROL ECU)

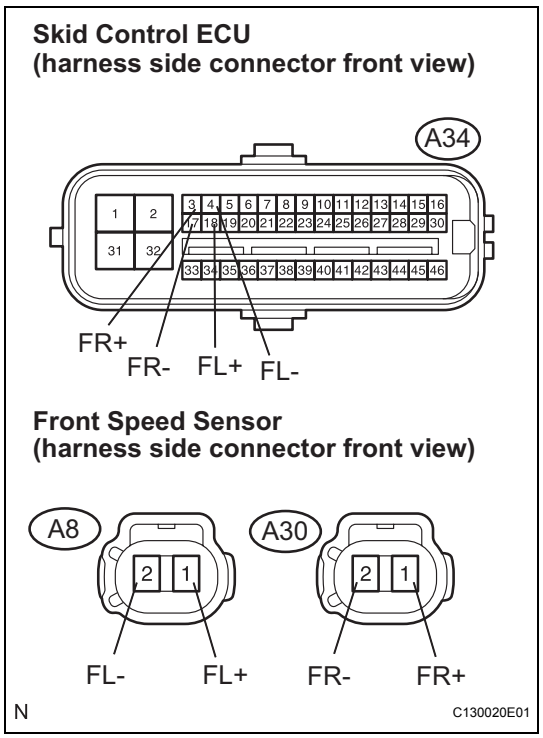

(a) Disconnect the skid control ECU connector and the front speed sensor connectors.
(b) Measure the resistance according to the value(s) in the table below.

Resistance:

LH

Tester Connection	Specified Condition
A34-18 (FL+) - A8-1 (FL+)	Below 1 Ω
A34-4 (FL-) - A8-2 (FL-)	Below 1 Ω
A8-1 (FL+) - Body ground	10 kΩ or higher
A8-2 (FL-) - Body ground	10 kΩ or higher

RH

Tester Connection	Specified Condition
A34-3 (FR+) - A30-1 (FR+)	Below 1 Ω
A34-17 (FR-) - A30-2 (FR-)	Below 1 Ω
A30-1 (FR+) - Body ground	10 kΩ or higher
A30-2 (FR-) - Body ground	10 kΩ or higher

NG → **REPAIR OR REPLACE HARNESS OR CONNECTOR (SPEED SENSOR CIRCUIT)**

OK

9 INSPECT SPEED SENSOR AND SENSOR ROTOR SERRATIONS

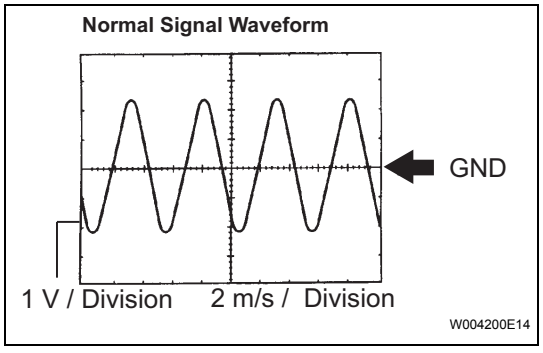

(a) INSPECTION USING OSCILLOSCOPE
(1) Disconnect the front speed sensor connector.
(2) Connect the oscilloscope to terminals 1 and 2 of the front speed sensor.
(3) Check that a waveform is output when the tires are rotated.

OK:

A waveforms as shown in the figure should be output.

HINT:

- As vehicle speed (wheel rotation speed) increases, the width of the waveform narrows and the fluctuation in the output voltage becomes greater.

BC

- When noise is identified in the waveform on the oscilloscope, error signals are generated due to rotor scratches, looseness or foreign matter attached to the speed sensor.

NG → Go to step 12

OK

10	READ VALUE OF INTELLIGENT TESTER (FRONT SPEED SENSOR)

(a) Connect the intelligent tester to the DLC3.
(b) Start the engine.
(c) Select "DATA LIST" and read the value displayed on the intelligent tester.

DATA LIST: ABS/VSC

Item	Measurement Item / Range (Display)	Normal Condition
WHEEL SPD FR	Wheel speed sensor (FR) reading / min.: 0 km/h (0 MPH), max.: 326 km/h (202 MPH)	Actual wheel speed
WHEEL SPD FL	Wheel speed sensor (FL) reading / min.: 0 km/h (0 MPH), max.: 326 km/h (202 MPH)	Actual wheel speed

(d) Check that there is no difference between the speed value output from the speed sensor displayed on the intelligent tester and the speed value displayed on the speedometer when driving the vehicle .

OK:

The speed value output from the speed sensor displayed on the intelligent tester is the same as the actual vehicle speed.

NG → **REPLACE ABS & TRACTION ACTUATOR ASSEMBLY**

OK

11	RECONFIRM DTC

(a) Clear the DTC.
(b) Start the engine.
(c) Drive the vehicle at the speed of 20 mph (32 km/h) or more for 60 seconds or more.
(d) Check that the same DTC is recorded.

BC

Result

Result	Proceed to
DTC is not output	A
DTC is output	B

HINT:
These DTCs may be stored due to a malfunction in the connector terminal connection, etc.

B → Go to step 12

A

END

12	INSPECT SPEED SENSOR TIP

(a) Remove the front speed sensor (See page BC-249).
(b) Check the sensor tip.
OK:
No scratches or foreign matter on the sensor tip.
NOTICE:
Check the speed sensor signal after cleaning or replacement (See page BC-107).

NG → **CLEAN OR REPLACE SPEED SENSOR**

OK

CLEAN OR REPLACE SPEED SENSOR ROTOR

DTC	C0210/33	Right Rear Wheel Speed Sensor Signal Malfunction
DTC	C0215/34	Left Rear Wheel Speed Sensor Signal
DTC	C1238/38	Foreign Object is Attached on Tip of Rear Speed Sensor RH
DTC	C1239/39	Foreign Object is Attached on Tip of Rear Speed Sensor LH
DTC	C1273/73	Low Output Signal of Rear Speed Sensor RH (Test Mode DTC)
DTC	C1274/74	Low Output Signal of Rear Speed Sensor LH (Test Mode DTC)
DTC	C1277/77	Abnormal Change in Output Signal of Rear Speed Sensor RH (Test Mode DTC)
DTC	C1278/78	Abnormal Change in Output Signal of Rear Speed Sensor LH (Test Mode DTC)

DESCRIPTION

Refer to DTCs C0200/31, C0205/32 (See page BC-258).

DTCs C1273/73, C1274/74 C1277/77, and C1278/78 are output only in the test mode (SIGNAL CHECK).

DTC No.	DTC Detecting Condition	Trouble Area
C0210/33 C0215/34	When any of the following (1 to 3) is detected: 1. All of the following conditions continue for at least 1 second. – Vehicle speed is more than 6 mph (10 km/h). – Open or short in the vehicle speed sensor signal circuit. 2. Momentary interruption of the sensor signal from the abnormal wheel has occurred 7 times or more. 3. The speed sensor signal circuit is open for 0.5 sec. or more.	• Right rear and left rear speed sensor • Each speed sensor circuit • Sensor rotor • Sensor installation • ABS & TRACTION actuator assembly (Skid control ECU)
C1238/38 C1239/39	At a vehicle speed of 12 mph (20 km/h) or more, noise occurs in the sensor signal from the abnormal wheel for 5 seconds or more.	• Speed sensor • Sensor rotor • Sensor installation • ABS & TRACTION actuator assembly (Skid control ECU)

HINT:

DTC C0210/33 and C1238/38 are for the right rear speed sensor.

DTC C0215/34 and C1239/39 are for the left rear speed sensor.

BC

WIRING DIAGRAM

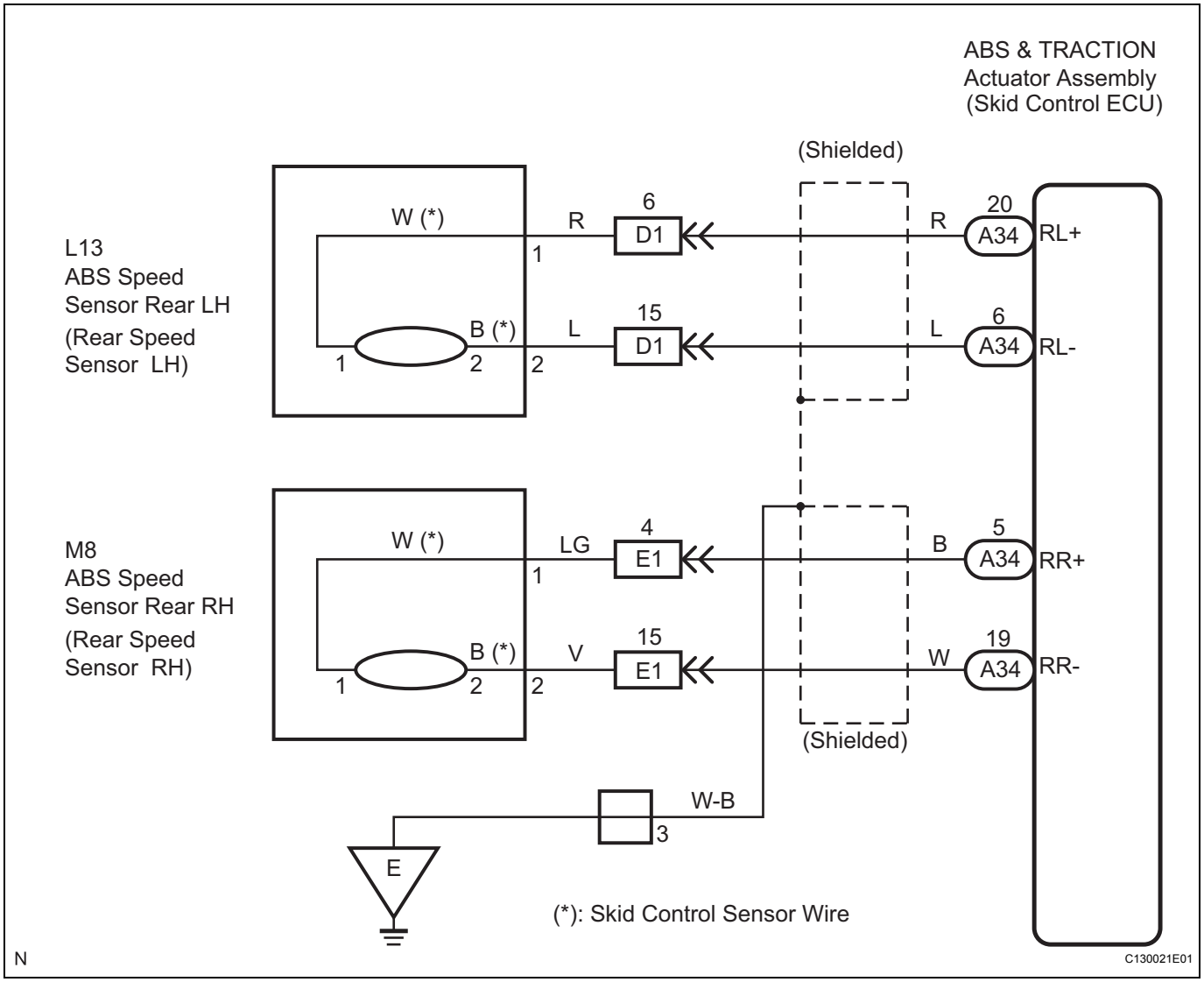

INSPECTION PROCEDURE

NOTICE:

When replacing the ABS & TRACTION actuator assembly , perform zero point calibration (See page BC-104).

HINT:

Start the inspection from step 1 when using the intelligent tester and start from step 3 when not using the intelligent tester.

BC

1	CHECK HARNESS AND CONNECTOR (MOMENTARY INTERRUPTION)

(a) Using the intelligent tester, check for any momentary interruption in the wire harness and connector corresponding to a DTC (See page BC-103).

DATA LIST: ABS/VSC

Item	Measurement Item / Range (Display)	Normal Condition
SPD SEN RR	RR speed sensor open detection / OPN DET or NORMAL	OPN DET: Momentary interruption NORMAL: Normal
SPD SEN RL	RL speed sensor open detection / OPN DET or NORMAL	OPN DET: Momentary interruption NORMAL: Normal

OK:

There are no momentary interruptions.

HINT:

Perform the above inspection before removing the sensor and connector.

NG → **CHECK AND REPAIR HARNESS AND CONNECTOR (SPEED SENSOR CIRCUIT)**

OK

2	READ VALUE OF INTELLIGENT TESTER (REAR SPEED SENSOR)

(a) Connect the intelligent tester to the DLC3.
(b) Start the engine.
(c) Select "DATA LIST" and read the value displayed on the intelligent tester.

DATA LIST: ABS/VSC

Item	Measurement Item / Range (Display)	Normal condition
WHEEL SPD RR	Wheel speed sensor (RR) reading / min.: 0 km/h (0 MPH), max.: 326 km/h (202 MPH)	Actual wheel speed
WHEEL SPD RL	Wheel speed sensor (RL) reading / min.: 0 km/h (0 MPH), max.: 326 km/h (202 MPH)	Actual wheel speed

(d) Check that there is no difference between the speed value output from the speed sensor displayed on the intelligent tester and the speed value displayed on the speedometer when driving the vehicle.

OK:

The speed value output from the speed sensor displayed on the intelligent tester is the same as the actual vehicle speed.

NG → **Go to step 6**

OK

3	PERFORM TEST MODE (SIGNAL CHECK)

(a) Check if test mode (signal check) DTCs are detected.

BC

Result

Result	Proceed to
Test mode (signal check) DTC is not output	A
Test mode (signal check) DTC is output	B

B → **Go to step 6**

A

4	INSPECT SPEED SENSOR AND SENSOR ROTOR SERRATIONS

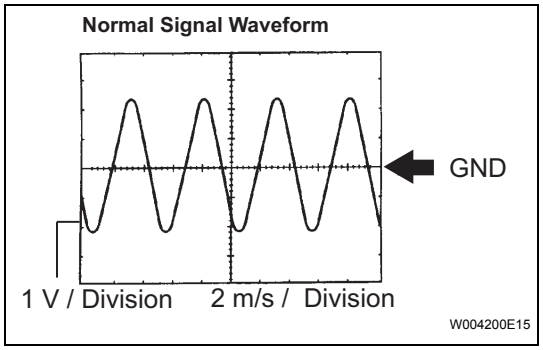

(a) INSPECTION USING OSCILLOSCOPE
(1) Disconnect the rear speed sensor connector.
(2) Connect the oscilloscope to terminals 1 and 2 of the rear speed sensor.
(3) Check that a waveform is output when the tires are rotated.

OK:

A waveform as shown in the figure should be output.

HINT:

- As vehicle speed (wheel rotation speed) increases, the width of the waveform narrows and the fluctuation in the output voltage becomes greater.
- When noise is identified in the waveform on the oscilloscope, error signals are generated due to rotor scratches, looseness or foreign matter attached to the speed sensor.

NG → **CLEAN OR REPLACE SPEED SENSOR AND SENSOR ROTOR**

OK

5	RECONFIRM DTC

(a) Clear the DTC.
(b) Start the engine.
(c) Drive the vehicle at the speed of 20 mph (32 km/h) or more for 60 seconds or more.
(d) Check that the same DTC is recorded.

Result

Result	Proceed to
DTC is not output	A
DTC is output	B

HINT:

- These DTCs may be stored due to a malfunction in the connector terminal connection, etc.
- If troubleshooting has been carried out according to the PROBLEM SYMPTOMS TABLE, refer back to the table and proceed to the next step (See page BC-117).

B → **Go to step 6**

A

END

BC

6 INSPECT REAR SPEED SENSOR INSTALLATION

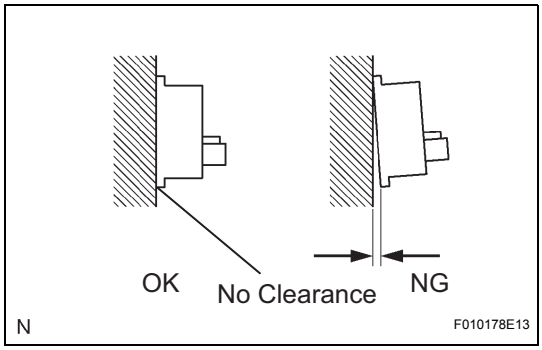

(a) Check the rear speed sensor installation.

OK:

There is no clearance between the sensor and rear axle carrier.

NOTICE:

Check the speed sensor signal after replacement (See page BC-107).

NG → **INSTALL REAR SPEED SENSOR CORRECTLY OR REPLACE REAR SPEED SENSOR**

OK

7 INSPECT REAR SPEED SENSOR

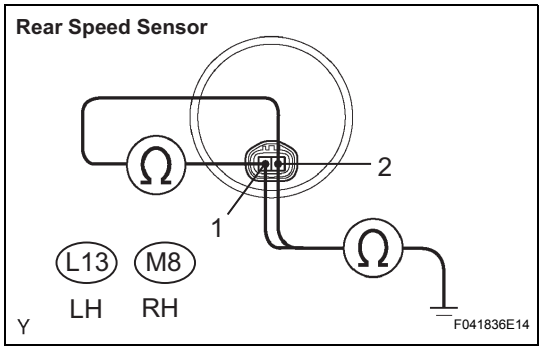

(a) Disconnect the rear speed sensor connector.

(b) Measure the resistance according to the value(s) in the table below.

Resistance:

LH

Tester Connection	Specified Condition
L13-1 (RL+) - L13-2 (RL-)	Below 2.2 kΩ
L13-1 (RL+) - Body ground	10 kΩ or higher
L13-2 (RL-) - Body ground	10 kΩ or higher

RH

Tester Connection	Specified Condition
M8-1 (RR+) - M8-2 (RR-)	Below 2.2 kΩ
M8-1 (RR+) - Body ground	10 kΩ or higher
M8-2 (RR-) - Body ground	10 kΩ or higher

NOTICE:

Check the speed sensor signal after replacement (See page BC-107).

NG → **REPLACE REAR SPEED SENSOR**

BC

OK

8 CHECK HARNESS AND CONNECTOR (REAR SPEED SENSOR TO SKID CONTROL ECU)

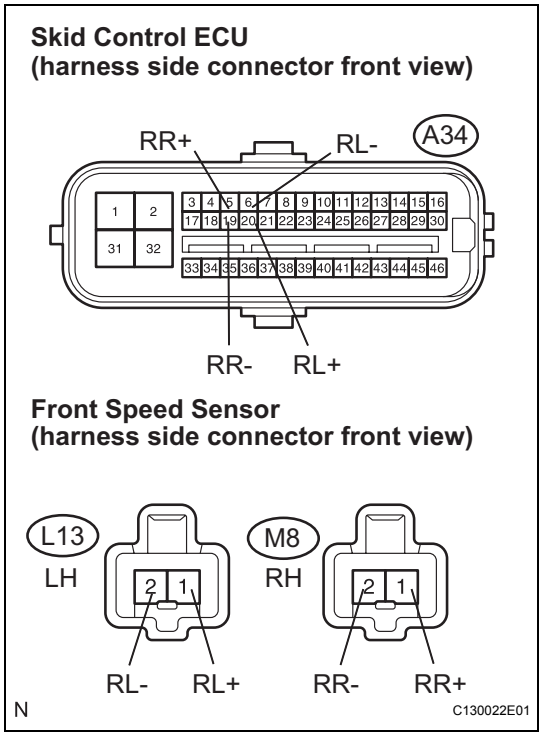

(a) SKID CONTROL ECU TO SKID CONTROL SENSOR WIRE
   (1) Disconnect the skid control ECU connector and the rear speed sensor connector.
   (2) Disconnect the skid control sensor wire.
   (3) Measure the resistance according to the value(s) in the table below.

Resistance:

LH

Tester Connection	Specified Condition
L13-1 (RL+) - A34-20 (RL+)	Below 1 Ω
L13-2 (RL-) - A34-6 (RL-)	Below 1 Ω
L13-1 (RL+) - Body ground	10 kΩ or higher
L13-2 (RL-) - Body ground	10 kΩ or higher

RH

Tester Connection	Specified Condition
M8-1 (RR+) - A34-5 (RR+)	Below 1 Ω
M8-2 (RR-) - A34-19 (RR-)	Below 1 Ω
M8-1 (RR+) - Body ground	10 kΩ or higher
M8-2 (RR-) - Body ground	10 kΩ or higher

NG → **REPAIR OR REPLACE HARNESS OR CONNECTOR (SKID CONTROL ECU TO SKID CONTROL SENSOR WIRE)**

OK

9 CHECK SKID CONTROL SENSOR WIRE

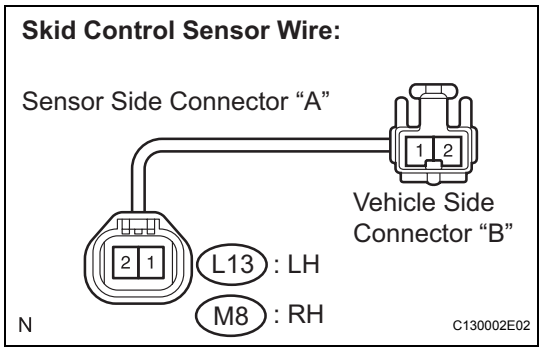

(a) SKID CONTROL SENSOR WIRE
   (1) Measure the resistance according to the value(s) in the table below.

Resistance:

LH

Tester Connection	Specified Condition
L13 (A-1) - L13 (B-1)	Below 1 Ω
L13 (A-1) - L13 (B-2)	10 kΩ or higher
L13 (A-1) - Body ground	10 kΩ or higher
L13 (A-2) - L13 (B-2)	Below 1 Ω
L13 (A-2) - L13 (B-1)	10 kΩ or higher
L13 (A-2) - Body ground	10 kΩ or higher

RH

Tester Connection	Specified Condition
M8 (A-1) - M8 (B-1)	Below 1 Ω
M8 (A-1) - M8 (B-2)	10 kΩ or higher
M8 (A-1) - Body ground	10 kΩ or higher

BC

Tester Connection	Specified Condition
M8 (A-2) - M8 (B-2)	Below 1 Ω
M8 (A-2) - M8 (B-1)	10 kΩ or higher
M8 (A-2) - Body ground	10 kΩ or higher

NG → **REPAIR OR REPLACE SKID CONTROL SENSOR WIRE**

OK

10 INSPECT SPEED SENSOR AND SENSOR ROTOR SERRATIONS

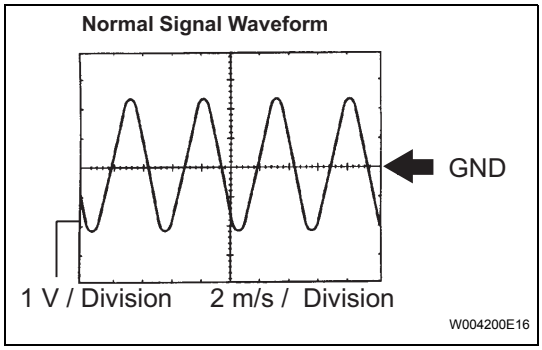

(a) INSPECTION USING OSCILLOSCOPE
  (1) Disconnect the rear speed sensor connector.
  (2) Connect the oscilloscope to terminals 1 and 2 of the rear speed sensor.
  (3) Check that a waveform is output when the tires are rotated.
    OK:
    A waveforms as shown in the figure should be output.
    HINT:
    - As vehicle speed (wheel rotation speed) increases, the width of the waveform narrows and the fluctuation in the output voltage becomes greater.
    - When noise is identified in the waveform on the oscilloscope, error signals are generated due to rotor scratches, looseness or foreign matter attached to the speed sensor.

NG → **CLEAN OR REPLACE SPEED SENSOR AND SENSOR ROTOR**

OK

11 READ VALUE OF INTELLIGENT TESTER (REAR SPEED SENSOR)

(a) Connect the intelligent tester to the DLC3.
(b) Start the engine.
(c) Select "DATA LIST" and read the value displayed on the intelligent tester.

DATA LIST: ABS/VSC

Item	Measurement Item / Range (Display)	Normal Condition
WHEEL SPD RR	Wheel speed sensor (RR) reading / min.: 0 km/h (0 MPH), max.: 326 km/h (202 MPH)	Actual wheel speed
WHEEL SPD RL	Wheel speed sensor (RL) reading / min.: 0 km/h (0 MPH), max.: 326 km/h (202 MPH)	Actual wheel speed

(d) Check that there is no difference between the speed value output from the speed sensor displayed on the intelligent tester and the speed value displayed on the speedometer when driving the vehicle.

BC

OK:

The speed value output from the speed sensor displayed on the intelligent tester is the same as the actual vehicle speed.

HINT:

These DTCs may be stored due to a malfunction in the connector terminal connection, etc.

NG → **REPLACE ABS & TRACTION ACTUATOR ASSEMBLY**

OK

END

DTC	C0226/21	SFR Solenoid Circuit

DTC	C0236/22	SFL Solenoid Circuit

DTC	C0246/23	SRR Solenoid Circuit

DTC	C0256/24	SRL Solenoid Circuit

DTC	C1225/25	SM Solenoid Circuit

DESCRIPTION

These solenoids turn on when signals are received from the skid control ECU and control the pressure acting on the wheel cylinders to control the braking force.

DTC No.	DTC Detecting Condition	Trouble Area
C0226/21 C0236/22 C0246/23 C0256/24	Open or short in solenoid circuit continues for 0.05 sec. or more.	ABS & TRACTION actuator assembly (Solenoid circuit)
C1225/25	When any of the following is detected: • While outputting switching solenoid (SM1 or SM2) ON, overcurrent continues for 0.05 sec. or more. • While outputting switching solenoid (SM1 or SM2) OFF, an open circuit continues for 0.05 sec. or more. • While outputting switching solenoid (SM1 or SM2) ON, an open circuit continues for 0.1 sec. or more. • While outputting switching solenoid (SM1 or SM2) OFF, current continues to be applied for 0.1 sec. or more. • Short to GND in the switching solenoid (SM1 or SM2) continues for 0.1 sec. or more. • Switching solenoid SM1 and SM2 are shorted for 0.1 sec. or more.	ABS & TRACTION actuator assembly (Solenoid circuit)

WIRING DIAGRAM

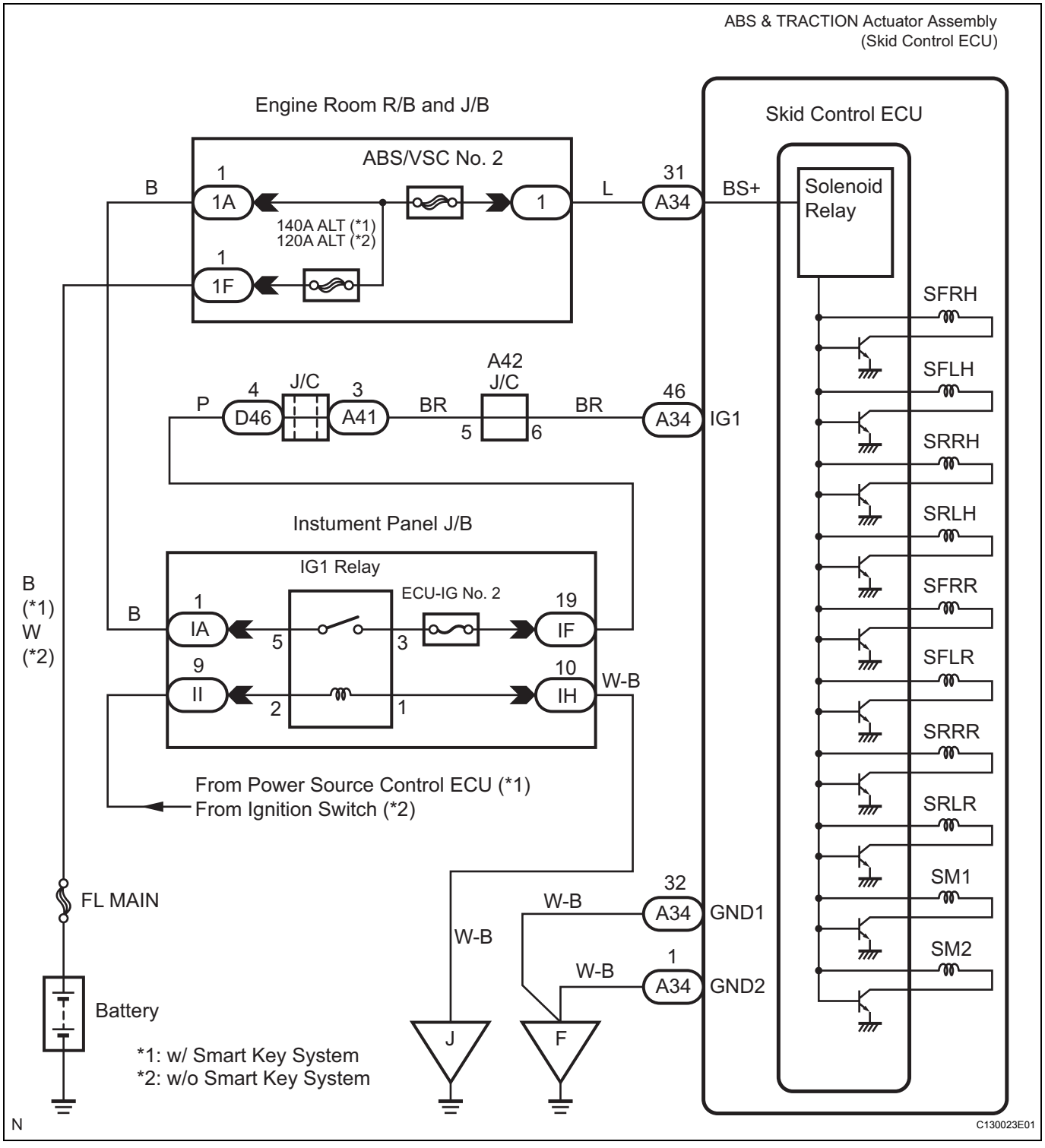

INSPECTION PROCEDURE

NOTICE:

When replacing the ABS & TRACTION actuator assembly, perform zero point calibration (See page BC-104).

BC

1	RECONFIRM DTC

HINT:
This code is detected when a problem is determined in the ABS & TRACTION actuator assembly.
The solenoid circuit is in the ABS & TRACTION actuator assembly.
Therefore, solenoid circuit inspection and solenoid unit inspection cannot be performed. Be sure to check if the DTC code is output before replacing the ABS & TRACTION actuator assembly.

(a) Clear the DTC.
(b) Start the engine.
(c) Drive the vehicle at the speed of 4 mph (6 km/h) or more.
(d) Check that the same DTC is recorded.

Result

Result	Proceed to
DTC is not output	A
DTC is output	B

HINT:
- If a speed signal of 4 mph (6 km/h) or more is input to the skid control ECU, with the ignition switch on (IG) and the stop light switch off, the ECU performs self diagnosis of the motor and solenoid circuits.
- If the normal system code is output (the trouble code is not output), slightly jiggle the connectors, wire harness, and fuses of the ABS & TRACTION actuator assembly. Make sure that no DTCs are output.
- If any DTCs are output while jigging a connector or wire harness of the ABS & TRACTION actuator (skid control ECU), inspect and repair the connector or wire harness.
- These DTCs may be stored due to a malfunction in the connector terminal connection, etc.

B → **REPLACE ABS & TRACTION ACTUATOR ASSEMBLY**

A

BC

END

DTC	C0273/13	Open in ABS Motor Relay Circuit

DTC	C0274/14	Short to B+ in ABS Motor Relay Circuit

DTC	C1361/91	Short Circuit in ABS Motor Fail Safe Relay Circuit

DESCRIPTION

If a DTC of the motor line is stored, the VSC No. 2 relay cuts off the power supply to the VSC No. 1 relay and performs fail-safe.

While any of the ABS, TRAC, VSC, or BA is operating, the skid control ECU (housed in the ABS & TRACTION actuator assembly) turns the VSC No. 2 relay on and activates the pump motor in the ABS & TRACTION actuator.

This code may be stored if the motor relay (+BM) voltage becomes lower than the DTC detecting condition due to insufficient output from the battery or alternator.

DTC No.	DTC Detecting Condition	Trouble Area
C0273/13	When any of the following (1 or 2) is detected: 1. All of the following conditions continue for 0.12 seconds or more. – The ignition terminal voltage is between 9.5 and 17.2 V. – During initial check or ABS, BA, TRAC, and VSC are in operation. – Relay contact is open when the relay is ON. 2. All of the following conditions continue for 0.12 seconds. – The ignition terminal voltage is 9.5 V or less. – Relay contact remains open when the relay is ON.	• ABS/VSC No. 1 fuse • VSC No. 1 relay • VSC No. 1 relay circuit • ABS & TRACTION actuator assembly
C0274/14	When the motor relay is OFF, the motor relay (VSC No.1 relay) remains closed for 4 seconds or more.	• ABS/VSC No. 1 fuse • VSC No. 1 relay • VSC No. 1 relay circuit • ABS & TRACTION actuator assembly
C1361/91	Immediately after the ignition switch is turned on (IG), the relay contact is closed for 2 seconds when the motor fail-safe relay (VSC No.2 relay) is OFF.	• ABS/VSC No. 1 fuse • VSC No. 2 relay • VSC No. 2 relay circuit • ABS & TRACTION actuator assembly

WIRING DIAGRAM

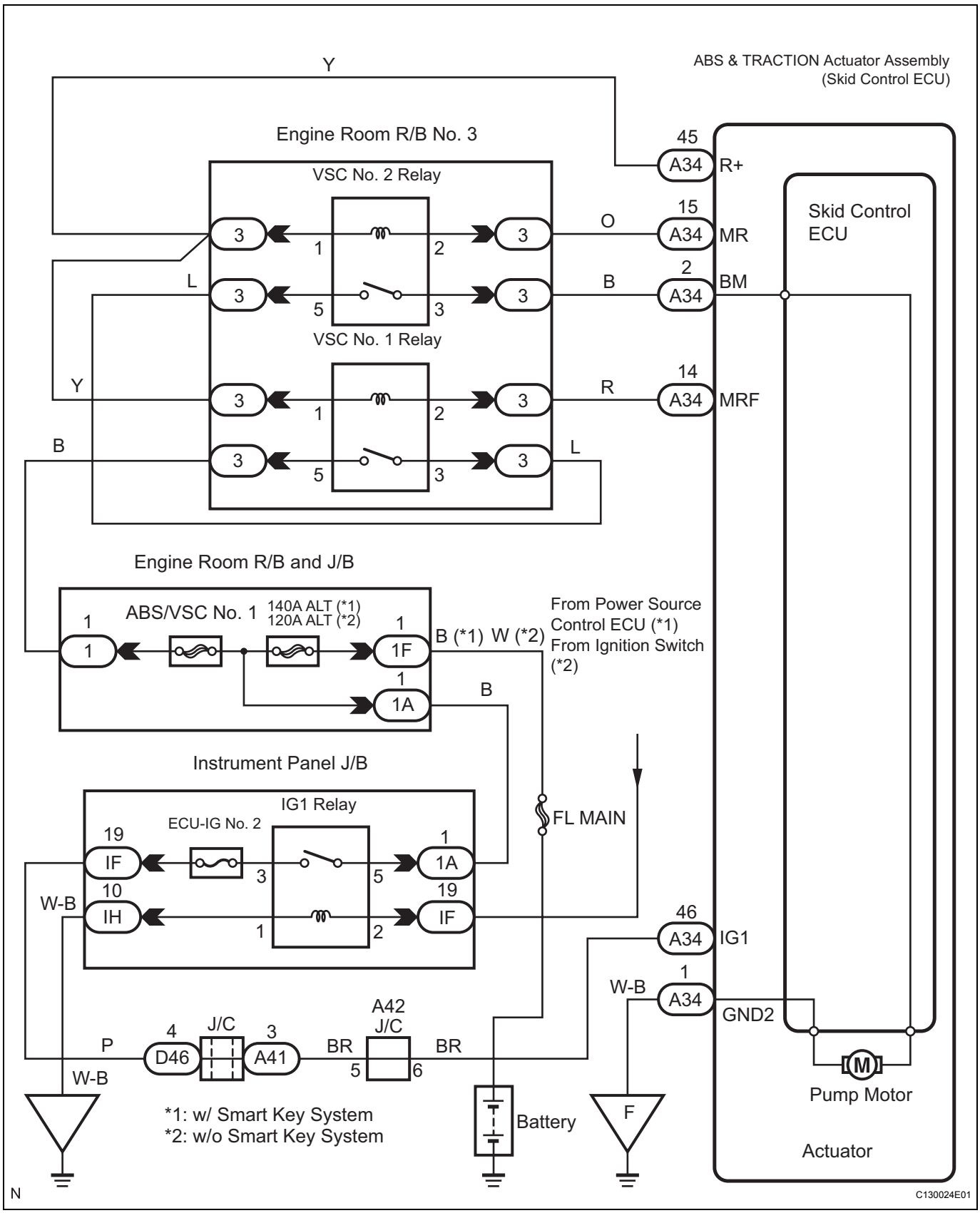

BC

INSPECTION PROCEDURE

NOTICE:

When replacing the ABS & TRACTION actuator assembly, perform zero point calibration (See page BC-104).

1 INSPECT FUSE (ABS/VSC NO. 1 FUSE)

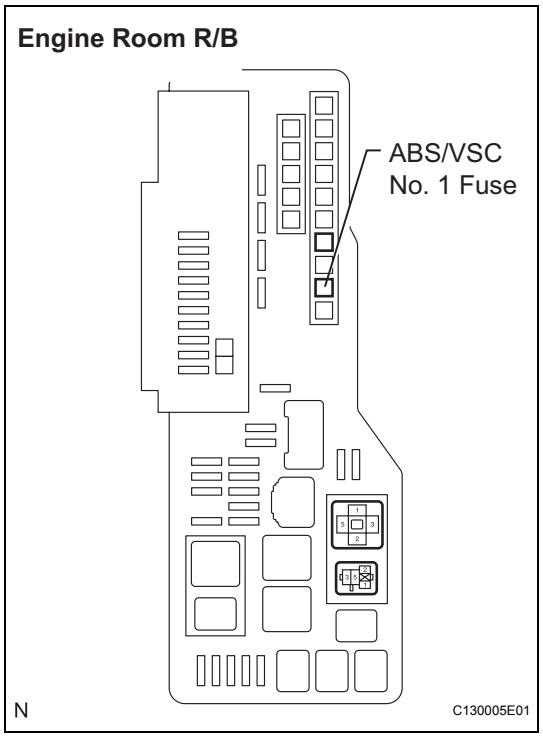

(a) Remove the ABS/VSC No. 1 fuse from the engine room R/B.

(b) Measure the resistance according to the value(s) in the table below.

Resistance

Tester Connection	Specified Condition
ABS/VSC No.1 fuse	Below 1 Ω (Continuity)

NG → **CHECK FOR SHORT IN ALL HARNESS AND CONNECTOR CONNECTED TO FUSE AND REPLACE FUSE**

OK

2 INSPECT VSC NO.2 RELAY

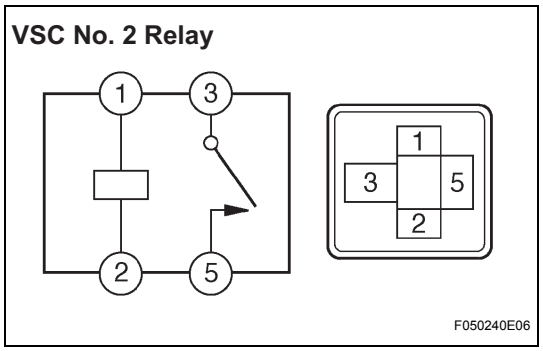

(a) Remove the VSC No. 2 relay.

(b) Measure the resistance according to the value(s) in the table below.

Resistance

Tester Connection	Condition	Specified Condition
1 - 2	Always	80 Ω (Continuity)
3 - 5	Always	10 kΩ or higher (No continuity)
3 - 5	Apply B + between terminal 1 and 2	Below 1 Ω (Continuity)

NG → **REPLACE VSC NO.2 RELAY**

OK

BC

3	INSPECT VSC NO.1 RELAY

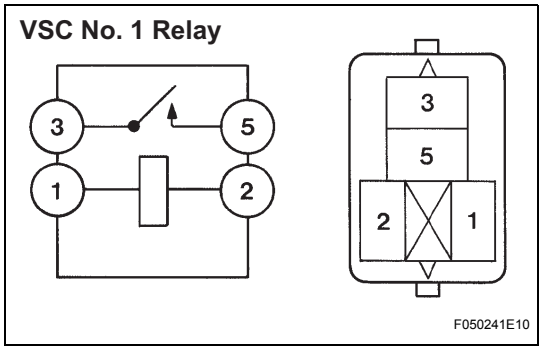

(a) Remove the VSC No. 1 relay.
(b) Measure the resistance according to the value(s) in the table below.

Resistance

Tester Connection	Condition	Specified Condition
1 - 2	Always	100 Ω (Continuity)
3 - 5	Always	10 kΩ or higher (No continuity)
3 - 5	Apply B + between terminal 1 and 2	Below 1 Ω (Continuity)

NG → REPLACE VSC NO.1 RELAY

OK

4	INSPECT ENGINE ROOM R/B No.3 (VSC NO. 1 RELAY POWER SOURCE CIRCUIT)

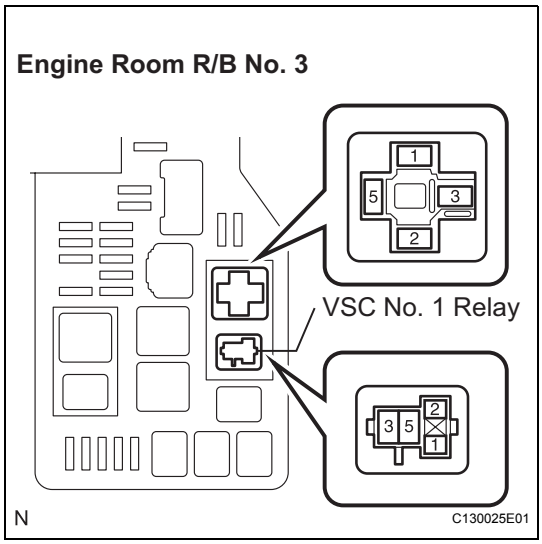

(a) Remove the VSC No. 1 relay from the engine room R/B No. 3.
(b) Turn the ignition switch on (IG).
(c) Measure the voltage according to the value(s) in the table below.

Voltage

Tester Connection	Condition	Specified Condition
VSC No. 1 relay terminal 5 - Body ground	Ignition switch on (IG)	10 to 14 V

NG → REPAIR OR REPLACE HARNESS OR CONNECTOR (POWER SOURCE CIRCUIT)

OK

5	INSPECT ENGINE ROOM R/B No.3

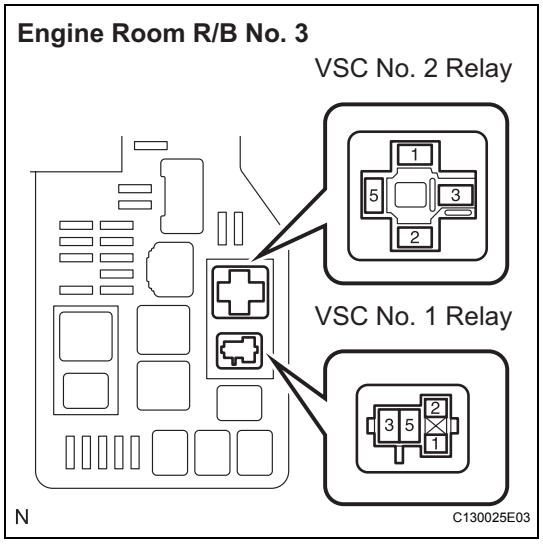

(a) Remove the VSC No. 1 and No. 2 relays.
(b) Measure the resistance according to the value(s) in the table below.

Resistance

Tester Connection	Specified Condition
VSC No. 1 relay terminal 1 - VSC No. 2 relay terminal 1	Below 1 Ω
VSC No. 1 relay terminal 3 - VSC No. 2 relay terminal 5	Below 1 Ω

NG → **REPAIR OR REPLACE ENGINE ROOM R/B No.3**

OK

6	CHECK HARNESS AND CONNECTOR (SKID CONTROL ECU TO ENGINE ROOM R/B No. 3)

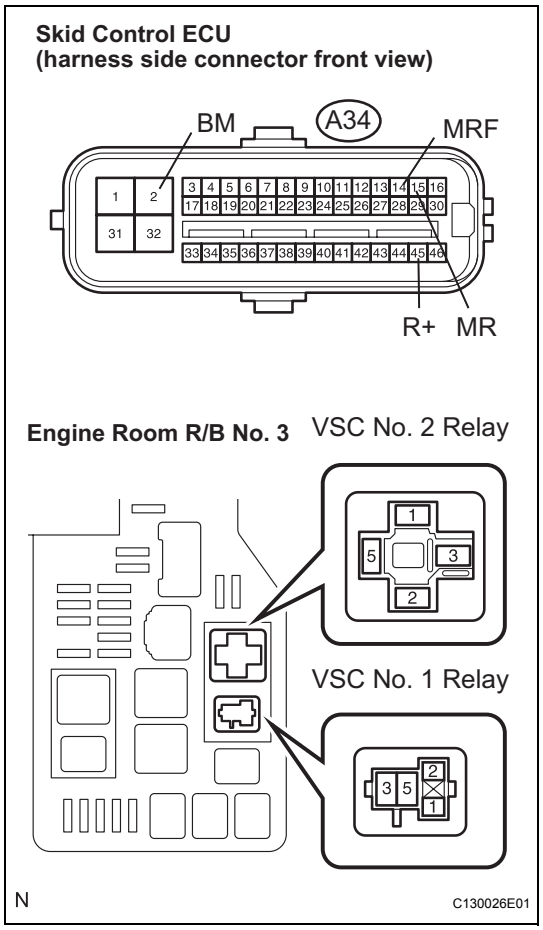

(a) Disconnect the skid control ECU connector.
(b) Remove the VSC No. 1 relay and VSC No. 2 relay from the engine room R/B No. 3.
(c) Measure the resistance according to the value(s) in the table below.

Resistance

Tester Connection	Specified Condition
A34-2 (BM) - VSC No. 2 relay 3	Below 1 Ω
A34-14 (MRF) - VSC No. 1 relay 2	Below 1 Ω
A34-15 (MR) - VSC No. 2 relay 2	Below 1 Ω
A34-45 (R+) - VSC No. 1 relay 1	Below 1 Ω
A34-45 (R+) - VSC No. 2 relay 1	Below 1 Ω

(d) Measure the resistance according to the value(s) in the table below.

Resistance

Tester Connection	Specified Condition
A34-2 (BM) - Body ground	10 kΩ or higher
A34-14 (MRF) - Body ground	10 kΩ or higher
A34-15 (MR) - Body ground	10 kΩ or higher
A34-45 (R+) - Body ground	10 kΩ or higher

NG → **REPAIR OR REPLACE HARNESS OR CONNECTOR**

BC

OK

7	RECONFIRM DTC

(a) Clear the DTC.
(b) Start the engine.
(c) Drive the vehicle at the speed of 4 mph (6 km/h) or more.
(d) Check that the same DTC is recorded.
HINT:
Reinstall the sensors, connectors, etc. and restore the vehicle to its prior conditions before rechecking for DTCs.

Result

Result	Proceed to
DTC is not output	A
DTC is output	B

HINT:
- If a speed signal of 4 mph (6 km/h) or more is input to the skid control ECU, with the ignition switch on (IG) and the stop light switch off, the ECU performs self diagnosis of the motor and solenoid circuits.
- If the normal system code is output (the trouble code is not output), slightly jiggle the connectors, wire harness, and fuses of the ABS & TRACTION actuator assembly. Make sure that no DTCs are output.
- If any DTCs are output while jigging a connector or wire harness of the ABS & TRACTION actuator (skid control ECU), inspect and repair the connector or wire harness.

HINT:
It is suspected that the DTCs were output due to a bad connection of the connector terminal.

B → REPLACE ABS & TRACTION ACTUATOR ASSEMBLY

A

BC END

DTC	C0278/11	Open in ABS Solenoid Relay Circuit

DTC	C0279/12	Short to B+ in ABS Solenoid Relay Circuit

DESCRIPTION

The ABS solenoid relay supplies power to the ABS solenoid and TRAC solenoid.
The solenoid relay is turned on 1.5 seconds after the ignition switch is turned on (IG), and is turned off if an open or short in the solenoid is detected by self diagnosis performed when the vehicle starts running.
The ABS solenoid relay is housed in the skid control ECU in the ABS & TRACTION actuator assembly.
HINT:
If a speed signal of 4 mph (6 km/h) or more is input to the skid control ECU, with the ignition switch on (IG) and the stop light switch off, the ECU performs self diagnosis of the motor and solenoid circuits.

DTC No.	DTC Detecting Condition	Trouble Area
C0278/11	When any of the following (1 or 2) is detected: 1. All of the following conditions continue for 0.2 seconds or more. – The ignition terminal voltage is between 9.5 and 17.2 V. – The solenoid relay contact is open when the relay is on. 2. All of the following conditions continue for 0.2 seconds or more. – IG1 terminal voltage becomes lower than 9.5 V or less when the relay is turned on. – The relay contact remains open.	• ABS/VSC No. 2 fuse • ABS & TRACTION actuator assembly (Solenoid relay circuit)
C0279/12	Immediately after the ignition switch is turned on (IG), the solenoid relay contact is closed for 0.2 seconds when the relay is turned on.	• ABS/VSC No. 2 fuse • ABS & TRACTION actuator assembly (Solenoid relay circuit)

WIRING DIAGRAM

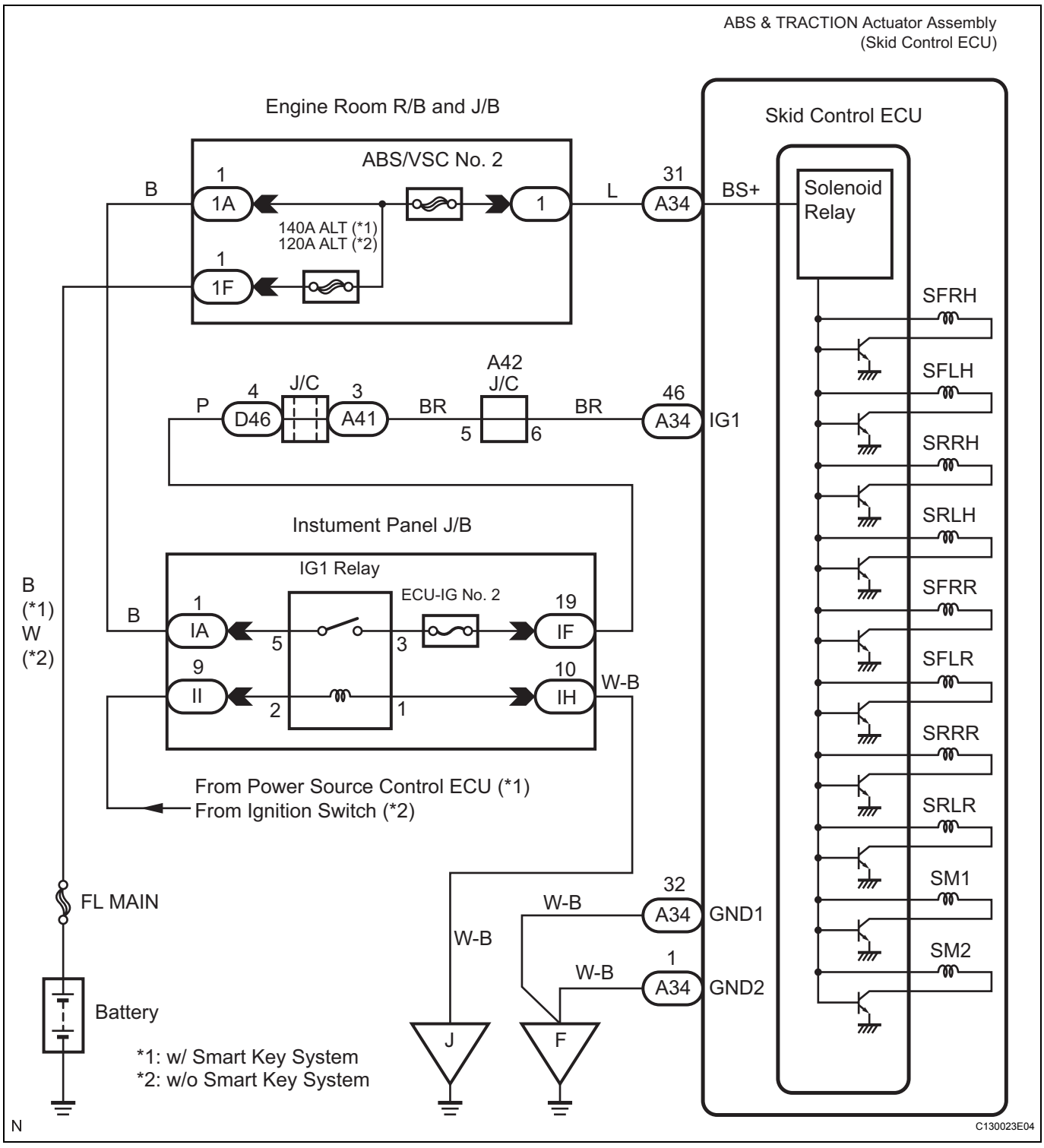

INSPECTION PROCEDURE

NOTICE:

When replacing the ABS & TRACTION actuator assembly, perform zero point calibration (See page BC-104).

HINT:

When C1241/41 is output along with C0278/11, inspect and repair the trouble areas indicated by C1241/41 first.

BC

1	INSPECT FUSE (ABS/VSC NO.2 FUSE)

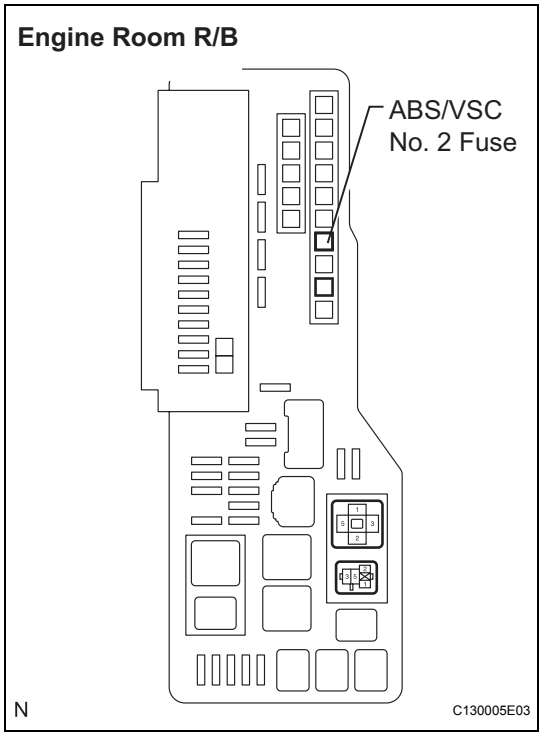

(a) Remove the ABS/VSC No. 2 fuse from the engine room R/B.
(b) Measure the resistance according to the value(s) in the table below.

Resistance

Tester Connection	Specified Condition
ABS/VSC No. 2 fuse	Below 1 Ω (Continuity)

NG → **CHECK FOR SHORT IN ALL HARNESS AND CONNECTOR CONNECTED TO FUSE AND REPLACE FUSE**

OK

2	INSPECT SKID CONTROL ECU TERMINAL VOLTAGE (+BS TERMINAL VOLTAGE AND GND CIRCUIT)

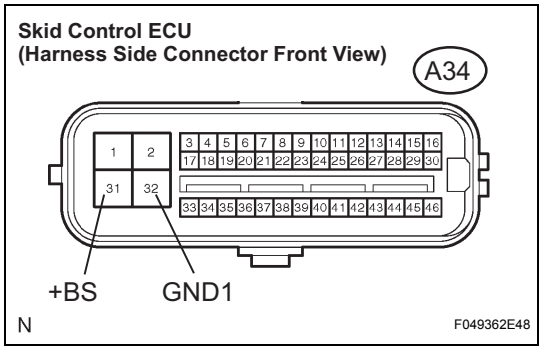

(a) Disconnect the skid control ECU connector.
(b) Measure the voltage according to the valve(s) in the table below.

Voltage

Tester Connection	Condition	Specified Condition
A34-31 (+BS) - Body ground	Always	10 to 14 V

(c) Measure the resistance according to the valve(s) in the table bellow.

Resistance

Tester Connection	Specified Condition
A34-32 (GND1) - Body ground	Below 1 Ω

NG → **REPAIR OR REPLACE HARNESS OR CONNECTOR (+BS, GND1 CIRCUIT)**

OK

3	RECONFIRM DTC

(a) Clear the DTC.

BC

(b) Start the engine.
(c) Check that the same DTC is recorded.
HINT:
Reinstall the sensors, connectors, etc. and restore the vehicle to its prior conditions before rechecking for DTCs.

Result

Result	Proceed to
DTC is not output	A
DTC is output	B

HINT:
- If the normal system code is output (the malfunction code is not output), slightly jiggle the connectors, wire harnesses, and fuses of the ABS & TRACTION actuator assembly. Make sure that no DTCs are output.
- If any DTCs are output while jigging a connector or wire harness of the ABS & TRACTION actuator (skid control ECU), inspect and repair the connector or wire harness.

HINT:
It is suspected that the DTCs were output due to a bad connection of the connector terminal.

B → **REPLACE ABS & TRACTION ACTUATOR ASSEMBLY**

A

END

DTC	C1201/51	Engine Control System Malfunction

DESCRIPTION

If a malfunction in the engine control system is detected, the operations of VSC and TRAC are prohibited by the fail-safe function. When the signals from the engine are input normally, the fail-safe is cancelled and the DTC is not stored.

DTC No.	DTC Detecting Condition	Trouble Area
C1201/51	Engine control system malfunction signal continues for 5 seconds.	Engine control system

INSPECTION PROCEDURE

1	CHECK HARNESS AND CONNECTOR (MOMENTARY INTERRUPTION)

(a) Using the intelligent tester, check for any momentary interruption in the wire harness and connector corresponding to a DTC (See page BC-103).

DATA LIST: ABS/VSC/TRC

Item	Measurement Item / Range (Display)	Normal Condition
EFI COM	EFI communication open detection / OPN DET or NORMAL	OPN DET: Momentary interruption NORMAL: Normal

OK:

There are no momentary interruptions.

HINT:

Perform the above inspection before removing the sensor and connector.

NG → **Go to step 3**

OK

2	CHECK DTC FOR ENGINE CONTROL SYSTEM

(a) Clear the DTC (engine control system).

(b) Check the DTC (engine control system).

Result

Result	Proceed to
DTC (engine control system) is not output	A
DTC (engine control system) is output	B

B → **REPAIR ENGINE CONTROL SYSTEM ACCORDING TO DTC OUTPUT**

A

REPLACE ECM

BC

3	REPAIR OR REPLACE HARNESS OR CONNECTOR (ECM TO SKID CONTROL ECU)

NEXT

4	RECONFIRM DTC

(a) Clear the DTC.
(b) Perform a road test.
(c) Check that the same DTC is recorded.

Result

Result	Proceed to
DTC is not output	A
DTC is output	B

B → Go to step 2

A

END

DTC	C1203/53	ECM Communication Circuit Malfunction

DESCRIPTION

The circuit is used to send TRAC & VSC control information from the skid control ECU to the ECM, and engine control information form the ECM to the skid control ECU.

DTC No.	DTC Detecting Condition	Trouble Area
C1203/53	Engine, drive source and destination variations that are sent from the ECM do not match the ones of the skid control ECU.	ECM

INSPECTION PROCEDURE

1	REPLACE ECM

NEXT

END

DTC	C1210/36	Zero Point Calibration of Yaw Rate Sensor Undone

DTC	C1336/39	Zero Point Calibration of Acceleration Sensor Undone

DESCRIPTION

The ABS & TRACTION actuator assembly receives signals from the yaw rate sensor (acceleration sensor) via CAN communication system.
The yaw rate sensor has the built-in acceleration sensor.
If there is trouble in the bus lines between the yaw rate and acceleration sensor and the CAN communication system, the DTCs U0123/62 (lost communication with the yaw rate sensor module) and U0124/95 (lost communication with the lateral acceleration sensor module) are output.
The DTCs are also output when the calibration has not been completed.

DTC No.	DTC Detecting Condition	Trouble Area
C1210/36	Zero point calibration of yaw rate sensor undone.	• ABS & TRACTION actuator assembly (Skid control ECU) • Zero point calibration undone (Perform zero point calibration and check DTC. If DTC is not output again, the sensor is normal)
C1336/39	Zero point calibration of acceleration sensor undone.	• ABS & TRACTION actuator assembly (Skid control ECU) • Zero point calibration undone (Perform zero point calibration and check DTC. If DTC is not output again, the sensor is normal)

INSPECTION PROCEDURE

NOTICE:
When replacing the ABS & TRACTION actuator assembly, perform zero point calibration (See page BC-104).
HINT:
When U0123/62, U0124/95 or U0126/63 is output along with C01210/36 or C1336/39, inspect and repair the trouble areas indicated by U0123/62, U0124/95 or U0126/63 first.

1	CHECK SENSOR INSTALLATION

(a) Check that the yaw rate and acceleration sensor has been installed properly (See page BC-258).
OK:
The sensor should be tightened to the specified torque.
The sensor should not be tilted.

NG → **INSTALL YAW RATE SENSOR CORRECTLY**

OK

BC

2	PERFORM ZERO POINT CALIBRATION OF YAW RATE SENSOR AND ACCELERATION SENSOR

(a) Perform the zero point calibration of the yaw rate sensor and acceleration sensor (See page BC-104).

NEXT

3	RECONFIRM DTC

(a) Clear the DTC.
(b) Start the engine.
(c) Drive the vehicle and turn the steering wheel to the right and left at a speed of 24 mph (35 km/h) or more.
(d) Check that the same DTCs are recorded.
HINT:
Reinstall the sensors, connectors, etc. and restore the vehicle to its prior conditions before rechecking for DTCs.

Result

Result	Proceed to
DTC is not output	A
DTC is output	B

HINT:
- The DTCs are recorded because zero point calibration has not been completed.
- End the procedure since the same DTCs are not recorded after completion of zero point calibration.
- If troubleshooting has been carried out according to the PROBLEM SYMPTOMS TABLE, refer back to the table and proceed to the next step (See page BC-117).

B → REPLACE ABS & TRACTION ACTUATOR ASSEMBLY

A

END

DTC	C1223/43	ABS Control System Malfunction

DESCRIPTION

This DTC is output when the VSC system detects a malfunction in the ABS system.

DTC No.	DTC Detecting Condition	Trouble Area
C1223/43	Malfunction in the ABS control system	ABS control system

INSPECTION PROCEDURE

1	CHECK DTC (FOR ABS SYSTEM)

(a) Clear the DTC.
(b) Turn the ignition switch on (IG).
(c) Check that the same DTC is recorded.

Result

Result	Proceed to
DTC is not output	A
DTC is output	B

HINT:
These DTCs may be stored due to a malfunction in the connector terminal connection, etc.

B → REPAIR CIRCUIT INDICATED BY OUTPUT DTC

A

END

DTC	C1231/31	Steering Angle Sensor Circuit Malfunction

DESCRIPTION

The steering angle sensor signal is sent to the skid control ECU via CAN communication system. When there is a malfunction in the CAN communication system, it will be detected by the diagnosis function.

DTC No.	DTC Detecting Condition	Trouble Area
C1231/31	When ECU IG1 terminal voltage is 9.5 V or more, the steering angle sensor malfunction signal is received.	• Steering angle sensor • Steering angle sensor circuit • Steering angle sensor power supply • CAN communication system

WIRING DIAGRAM

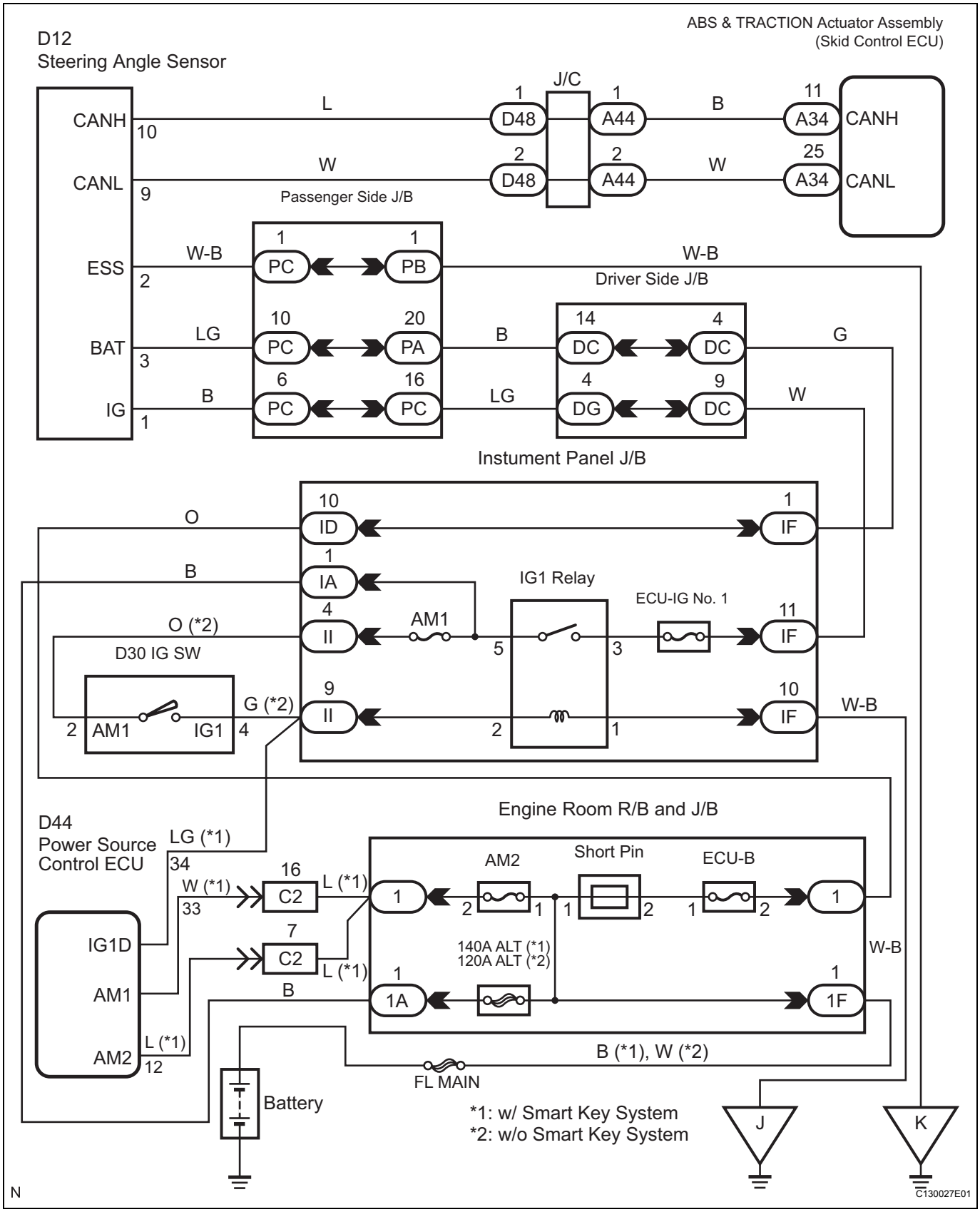

BC

N

INSPECTION PROCEDURE

HINT:

- When U0121/94, U0123/62, U0124/95 or U0126/63 is output together with C1231/31, inspect and repair the trouble areas indicated by U0121/94, U0123/62, U0124/95 or U0126/63 first.
- When the speed sensor or the yaw rate sensor has trouble, DTCs for the steering angle sensor may be output even when the steering angle sensor is normal. When DTCs for the speed sensor or yaw rate sensor are output together with other DTCs for the steering angle sensor, inspect and repair the speed sensor and yaw rate sensor first, and then inspect and repair the steering angle sensor.
- Start the inspection from step 1 when using the intelligent tester and start from step 2 when not using the intelligent tester.

1 CHECK HARNESS AND CONNECTOR (MOMENTARY INTERRUPTION)

(a) Using the intelligent tester, check for any momentary interruption in the wire harness and connectors between the skid control ECU and the steering angle sensor (See page BC-103).

DATA LIST: ABS/VSC

Item	Measurement Item / Range (Display)	Normal Condition
STEERING SEN	Steering sensor open detection / OPN DET or NORMAL	OPN DET: Momentary interruption NORMAL: Normal

OK:

There are no momentary interruptions.

HINT:

Perform the above inspection before removing the sensor and connector.

NG → **Go to step 4**

OK

2 CHECK STEERING ANGLE SENSOR

(a) Clear the DTC.
(b) Turn the ignition switch off.
(c) Turn the ignition switch on (IG) again and check that no CAN communication system DTC is output.
(d) Start the engine.
(e) Drive the vehicle and turn the steering wheel to the right and left at the speed of 24 mph (35 km/h) and check that no speed sensor and yaw rate sensor DTCs are output.

BC

Result

Result	Proceed to
No CAN communication system DTC and the speed sensor or yaw rate sensor DTC are output.	**A**
CAN communication system DTC is output.	**B**
Speed sensor or yaw rate sensor DTC is output.	

HINT:

- If there is a malfunction in the speed sensor or the yaw rate sensor, an abnormal value may be output although the steering sensor is normal.

- If the speed sensor and the yaw rate sensor DTCs are output simultaneously, repair the sensors and inspect the steering sensor.

B → **REPAIR CIRCUIT INDICATED BY OUTPUT CODE**

A

3	CHECK TERMINAL VOLTAGE (STEERING ANGLE SENSOR CONNECTOR)

Steering Angle Sensor Wire Harness View:

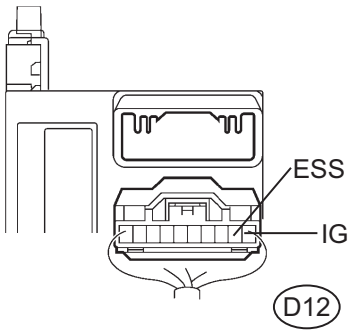

G030156E14

(a) Remove the steering wheel and the column lower cover.
(b) Disconnect the steering angle sensor connector.
(c) Turn the ignition switch on (IG).
(d) Measure the voltage according to the value(s) in the table below.

Voltage

Tester Connection	Condition	Specified Condition
D12-1 (IG) - D12-2 (ESS)	Ignition switch on (IG)	10 to 14 V

(e) Turn the ignition switch off.
(f) Measure the resistance according to the value(s) in the table below.

Resistance

Tester Connection	Specified Condition
D12-2 (ESS) - Body ground	Below 1 Ω

HINT:
If troubleshooting has been carried out according to the PROBLEM SYMPTOMS TABLE, refer back to the table and proceed to the next step (See page BC-117).

NG → **REPAIR OR REPLACE HARNESS OR CONNECTOR (IG, ESS CIRCUIT)**

OK

REPLACE STEERING ANGLE SENSOR

BC

4	CHECK AND REPAIR HARNESS AND CONNECTOR (STEERING ANGLE SENSOR TO SKID CONTROL ECU)

NEXT

5	RECONFIRM DTC

(a) Clear the DTC.
(b) Start the engine.
(c) Drive the vehicle and turn the steering wheel to the right and left at the speed of 24 mph (35 km/h) or more.
(d) Check that the same DTC is recorded.

Result

Result	Proceed to
DTC is not output	A
DTC is output	B

HINT:
If troubleshooting has been carried out according to the PROBLEM SYMPTOMS TABLE, refer back to the table and proceed to the next step (See page BC-117).

B → Go to step 2

A

END

DTC	C1232/32	Stuck in Deceleration Sensor

DTC	C0371/71	Yaw Rate Sensor (Test Mode DTC)

DTC	C1234/34	Yaw Rate Sensor Malfunction

DTC	C1243/43	Acceleration Sensor Stuck Malfunction

DTC	C1244/44	Open or Short in Acceleration Sensor Circuit

DTC	C1245/45	Acceleration Sensor Output Malfunction

DTC	C1279/79	Acceleration Sensor Output Voltage Malfunction (Test Mode DTC)

DTC	C1381/97	Yaw Rate and / or Acceleration Sensor Power Supply Voltage Malfunction

DESCRIPTION

The skid control ECU receives signals from the yaw rate and acceleration sensor via the CAN communication system.
The yaw rate sensor has a built-in acceleration sensor.
If there is trouble in the bus lines between the yaw rate and acceleration sensor and the CAN communication system, the DTC U0123/62 (lost communication with yaw rate sensor module) and U0124/95 (lost communication with lateral acceleration sensor module) are output.
These DTCs are also output when the calibration has not been completed.
DTCs C1279/79 and C0371/71 are output only in the test mode (SIGNAL CHECK).

DTC No.	DTC Detecting Condition	Trouble Area
C1232/32	At a vehicle speed of 6 mph (10 km/h) or more, either GL1 or GL2 (input signal) does not change for 30 seconds or more.	• Yaw rate and acceleration sensor • Yaw rate and acceleration sensor circuit
C1234/34	Sensor malfunction signal is received from the yaw rate sensor.	• Yaw rate and acceleration sensor • Yaw rate and acceleration sensor circuit
C1243/43	While the vehicle speed changes from 19 mph (30 km/h) to 0 mph (0 km/h), the condition that the values of GL1 and GL2 do not change occurs 16 times or more.	• Yaw rate and acceleration sensor • Yaw rate and acceleration sensor circuit
C1244/44	When either of the following is detected: 1. A data malfunction signal is received from the acceleration sensor. 2. After the difference between GL1 and GL2 becomes 0.6 G or more with the vehicle stationary, the difference remains 0.4 G or more for 60 seconds or more.	• Yaw rate and acceleration sensor • Yaw rate and acceleration sensor circuit
C1245/45	At a vehicle speed of 19 mph (30 km/h) or more, the difference between the forward and backward G calculated from the acceleration sensor value and that calculated from the vehicle speed sensor exceeds 0.35 G for 60 seconds or more.	• Yaw rate and acceleration sensor • Yaw rate and acceleration sensor circuit
C1381/97	At a vehicle speed of more than 2 mph (3 km/h), the acceleration sensor power source malfunction signal is received for 10 seconds or more.	• Yaw rate and acceleration sensor • Yaw rate and acceleration sensor power source circuit

BC

WIRING DIAGRAM

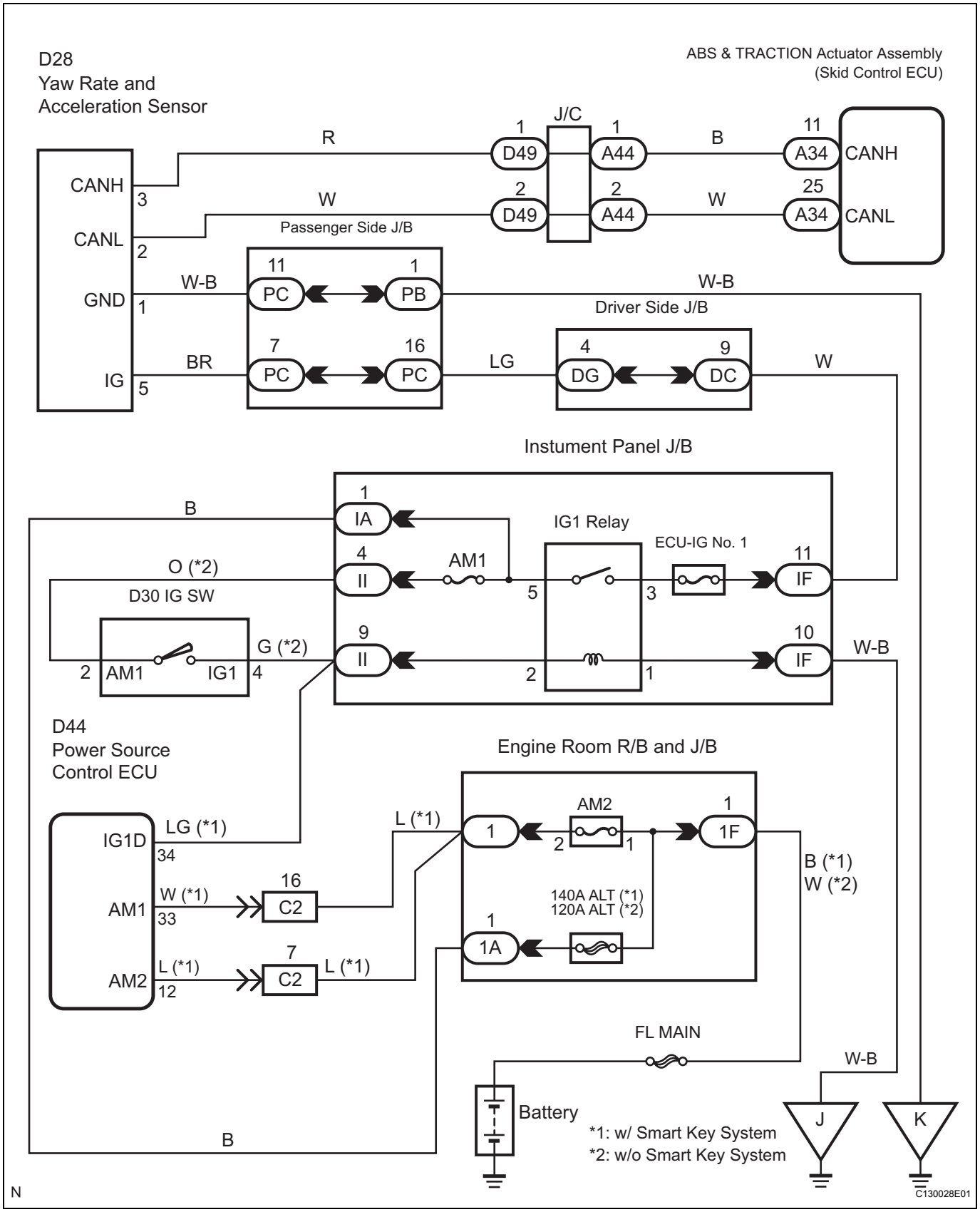

BC

INSPECTION PROCEDURE

HINT:
When U0123/62, U124/95 or U0126/63 is output together with C1232/32, C1234/34, C1243/43, C1244/44, C1245/45, and C1381/97, inspect and repair the trouble areas indicated by U0123/62, U0124/95 or U0126/63 first.

1	CHECK DTC

(a) Clear the DTC.
(b) Turn the ignition switch off.
(c) At a speed of 18 mph (30 km/h) or more, drive the vehicle, turn the steering wheel, and decelerate (depress the brake pedal).
(d) Turn the ignition switch on (IG) again and check that no CAN communication system DTC is output.
(e) Check that no DTCs for zero point calibration of the yaw rate sensor undone (C1210/36) and for zero point calibration of the acceleration sensor undone (C1336/39) are output.

Result

Result	Proceed to
DTCs (C1210/36, C1336/39, and CAN communication system malfunction) are not output.	A
CAN communication system DTC is output.	B
C1210/36 and C1336/39 are output.	B

B → REPAIR CIRCUIT INDICATED BY OUTPUT CODE

A

2	CHECK SENSOR INSTALLATION (YAW RATE SENSOR)

(a) Check that the yaw rate and acceleration sensor has been installed properly (See page BC-258).
OK:
The sensor is tightened to the specified torque.
The sensor is not tilted.

NG → INSTALL YAW RATE AND ACCELERATION SENSOR CORRECTLY

OK

3 CHECK HARNESS AND CONNECTOR (IG TERMINAL)

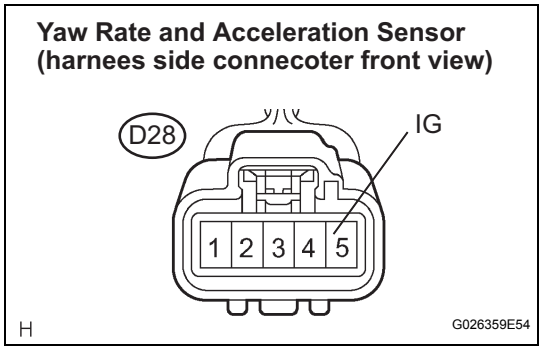

(a) Disconnect the yaw rate and acceleration sensor connector.
(b) Turn the ignition switch on (IG).
(c) Measure the voltage according to the value(s) in the table below.

Voltage

Tester Connection	Condition	Specified Condition
D28-5 (IG) - Body ground	Ignition switch on (IG)	10 to 14 V

NG → **REPAIR OR REPLACE HARNESS OR CONNECTOR (IG CIRCUIT)**

OK

4 CHECK HARNESS AND CONNECTOR (GND TERMINAL)

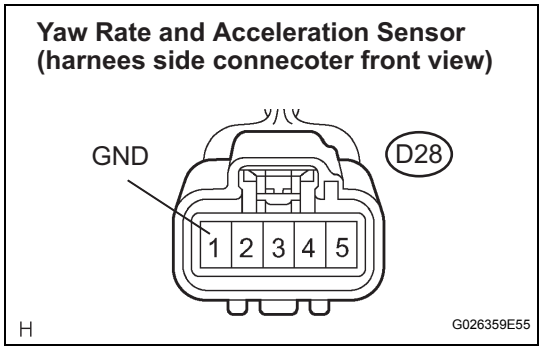

(a) Disconnect the yaw rate and acceleration sensor connector.
(b) Measure the resistance according to the value(s) in the table below.

Resistance

Tester Connection	Specified Condition
D28-1 (GND) - Body ground	Below 1 Ω

NOTICE:

- **When replacing the yaw rate and acceleration sensor, perform zero point calibration (See page BC-104).**
- **Check the yaw rate and acceleration sensor signal after replacement (See page BC-107).**

HINT:
If troubleshooting has been carried out according to the PROBLEM SYMPTOMS TABLE, refer back to the table and proceed to the next step (See page BC-117).

NG → **REPAIR OR REPLACE HARNESS OR CONNECTOR (GND CIRCUIT)**

OK

REPLACE YAW RATE AND ACCELERATION SENSOR

BC

DTC	C1241/41	Low Battery Positive Voltage or Abnormally High Battery Positive Voltage

DESCRIPTION

If a malfunction is detected in the power supply circuit, the skid control ECU (housed in the ABS & TRACTION actuator assembly) outputs the DTC and prohibits operation with the fail-safe function.
This DTC is stored when the IG1 terminal voltage deviates from the DTC detecting condition due to a malfunction in the power supply or charging circuit such as the battery or alternator circuit, etc.
The DTC is cancelled when the IG1 terminal voltage returns to normal.

DTC No.	DTC Detecting Condition	Trouble Area
C1241/41	when any of the following is detected: 1. At a vehicle speed of 2 mph (3 km/h) or more, the IG1 terminal voltage is 9.5 V or less for 10 seconds or more. 2. When the solenoid relay remains ON and the IG1 terminal voltage is 9.5 V or less, the relay contact is open for 0.2 seconds or more.	• Battery • Charging system • Power source circuit • Internal power supply circuit of the skid control ECU

WIRING DIAGRAM

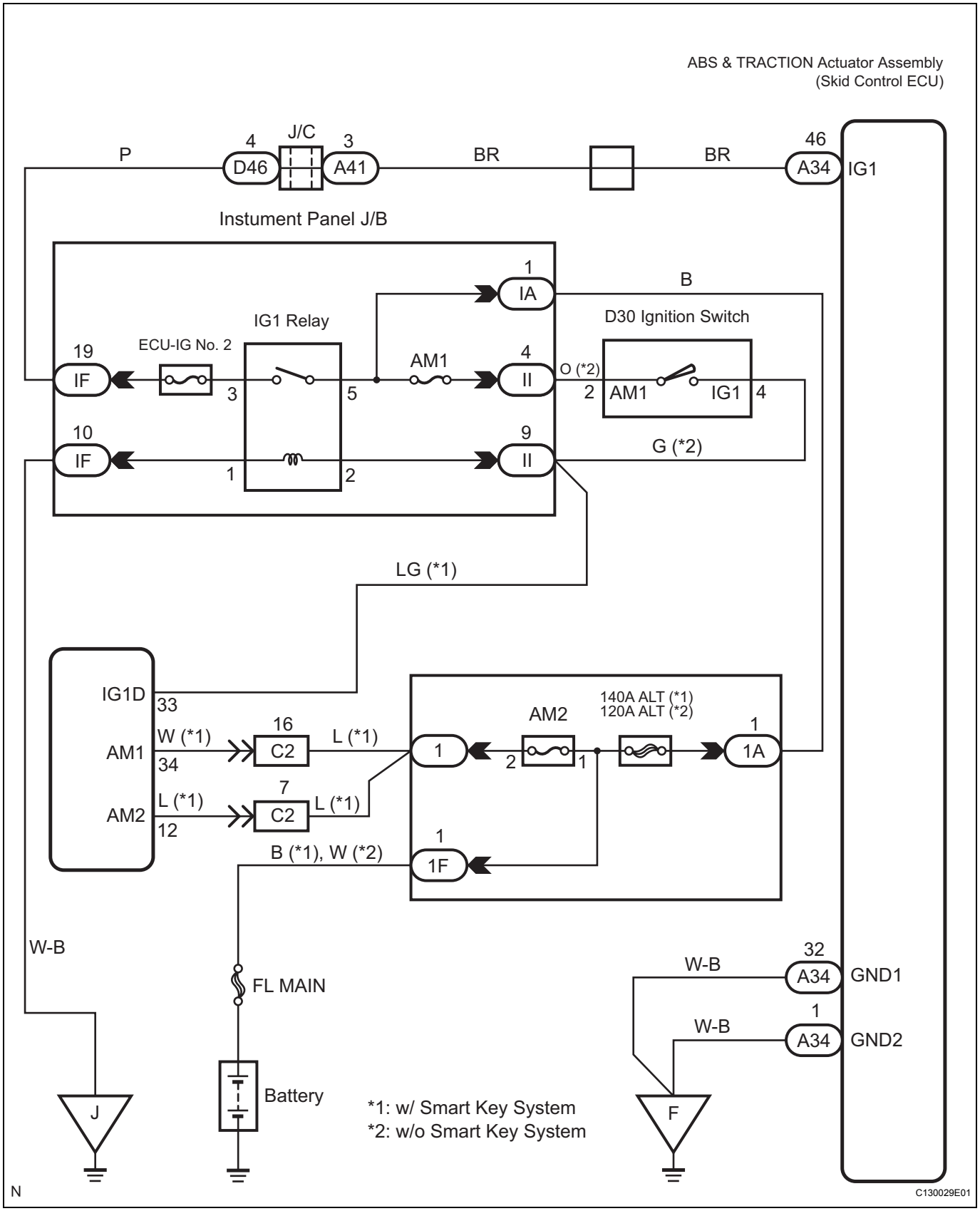

BC

INSPECTION PROCEDURE

NOTICE:

When replacing the ABS & TRACTION actuator assembly, perform zero point calibration (See page BC-104).

1 INSPECT FUSE (ECU-IG NO.2 FUSE)

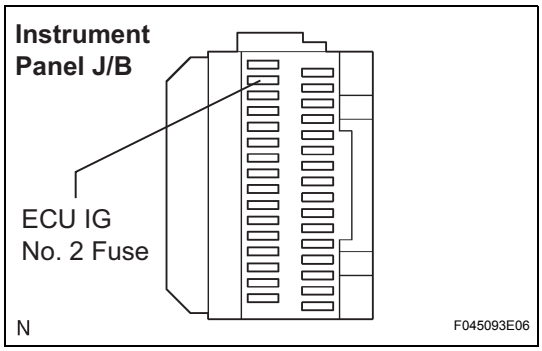

(a) Remove the ECU-IG No. 2 fuse from the instrument panel J/B.

(b) Measure the resistance according to the value(s) in the table below.

Resistance

Tester Connection	Specified Condition
ECU-IG No. 2 fuse	Below 1 Ω (Continuity)

NG → **CHECK FOR SHORT IN ALL HARNESS AND CONNECTOR CONNECTED TO FUSE AND REPLACE FUSE**

OK

2 INSPECT BATTERY

(a) Check the battery voltage.

Voltage:

10 to 14 V

NG → **INSPECT CHARGING SYSTEM**

OK

3 INSPECT SKID CONTROL ECU TERMINAL VOLTAGE (IG1 TERMINAL)

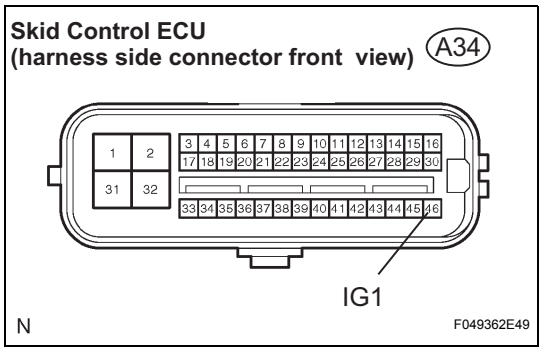

(a) Disconnect the skid control ECU connector.

(b) Turn the ignition switch on (IG).

(c) Measure the voltage according to the value(s) in the table below.

Voltage

Tester Connection	Condition	Specified Condition
A34-46 (IG1) - Body ground	Ignition switch on (IG)	10 to 14 V

NG → **REPAIR OR REPLACE HARNESS OR CONNECTOR (IG1 CIRCUIT)**

OK

BC

4 INSPECT SKID CONTROL ECU (GND TERMINAL CONTINUITY)

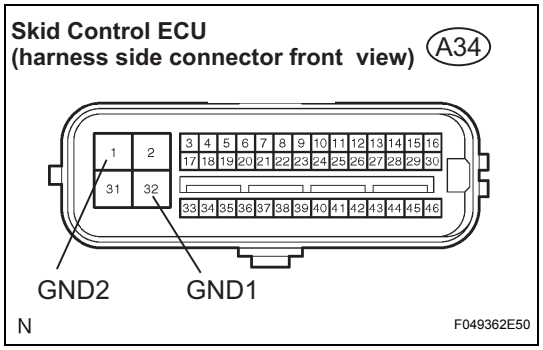

(a) Disconnect the skid control ECU connector.
(b) Measure the resistance according to the value(s) in the table below.

Resistance

Tester Connection	Specified Condition
A34-32 (GND1) - Body ground	Below 1 Ω
A34-1 (GND2) - Body ground	Below 1 Ω

NG → **REPAIR OR REPLACE HARNESS OR CONNECTOR (GND CIRCUIT)**

OK

5 INSPECT SKID CONTROL ECU TERMINAL VOLTAGE (IG1 TERMINAL)

(a) Connect the intelligent tester to the DLC3.
(b) Start the engine.
(c) Select DATA LIST on the intelligent tester.

DATA LIST: ABS/VSC

Item	Measurement Item / Range (Display)	Normal Condition
IG VOLTAGE	ECU power supply voltage / TOO LOW / NORMAL / TOO HIGH	TOO HIGH: 14 V or more NORMAL: 9.5 V to 14 V TOO LOW: 9.5 V or less

(d) Read the voltage condition output from the ECU displayed on the intelligent tester.
OK:
"NORMAL" is displayed.
HINT:
- These DTCs may be restored due to a malfunction in the connector terminal connection, etc.
- If troubleshooting has been carried out according to the PROBLEM SYMPTOMS TABLE, refer back to the table and proceed to the next step (See page BC-117).

NG → **REPLACE ABS & TRACTION ACTUATOR ASSEMBLY**

OK

END

BC

DTC	C1246/46	Master Cylinder Pressure Sensor Malfunction

DTC	C1281/81	Master Cylinder Pressure Sensor Output Malfunction (Test Mode DTC)

DESCRIPTION

Master cylinder pressure sensor is connected to the skid control ECU in the ABS & TRACTION actuator assembly.
DTC C1281/81 is output only in the test mode (SIGNAL CHECK).

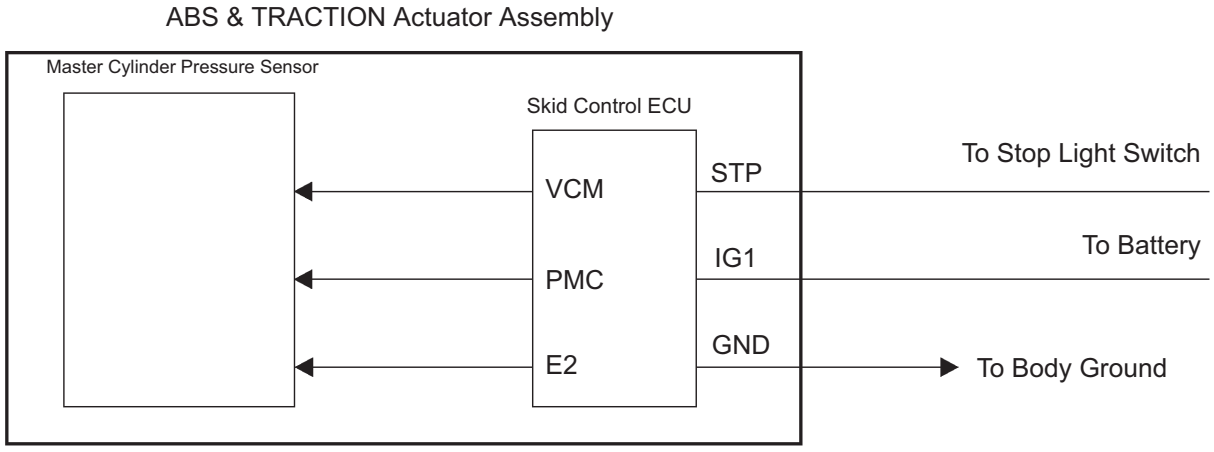

VCM: Power Supply for Master Cylinder Pressure Sensor

PMC: Master Cylinder Pressure Sensor Input

E2: Master Cylinder Pressure Sensor Ground

C

F047084E02

DTC No.	DTC Detecting Condition	Trouble Area
C1246/46	When any of the following is detected: • At a vehicle speed of 4.3 mph (7 km/h) or more, when the PMC terminal voltage is over 0.86 V, it does not change by 0.005 V or more for 30 seconds. • Noise occurs in the PMC terminal 7 times or more within 5 seconds. • When the stop light switch is OFF, the PMC terminal voltage is more than 0.86 V or less than 0.3 V for 5 seconds or more. • With the IG1 terminal voltage between 9.5 and 17.2 V, the VCM terminal voltage is not between 4.4 and 5.6 V for 1.2 seconds or more. • When the VCM terminal voltage is between 4.4 and 5.6 V, the PMC terminal voltage is not between 0.14 and 4.85 V for 1.2 seconds or more.	• Master cylinder pressure sensor • Master cylinder pressure sensor circuit • Stop light switch circuit • ABS & TRACTION actuator assembly

BC

INSPECTION PROCEDURE

NOTICE:
When replacing the ABS & TRACTION actuator assembly, perform zero point calibration (See page BC-104).

1 INSPECT STOP LIGHT OPERATION

(a) Check that the stop light comes on when the brake pedal is depressed and goes off when the brake pedal is released.

OK

Pedal Condition	Illumination Condition
Brake pedal depressed	ON
Brake pedal released	OFF

NG → **CHECK STOP LIGHT CIRCUIT**

OK

2 READ VALUE OF INTELLIGENT TESTER (MASTER CYLINDER PRESSURE SENSOR)

(a) Connect the intelligent tester to the DLC3.
(b) Start the engine.
(c) Select "DATA LIST" on the intelligent tester.

DATA LIST: ABS/VSC

Item	Measurement Item / Range (Display)	Normal Condition
MAS CYL PRS1	Master cylinder pressure sensor 1 reading/ min.: 0 V, max.: 5V	When brake pedal is released: 0.3 to 0.9 V

(d) Check that the brake fluid pressure value of the master cylinder pressure sensor observed on the intelligent tester changes when the brake pedal is depressed.
OK:
When the pedal is depressed, voltage displayed on the intelligent tester increases.

NG → **REPLACE ABS & TRACTION ACTUATOR ASSEMBLY**

OK

3 READ VALUE OF INTELLIGENT TESTER (STOP LIGHT SWITCH OPERATION)

(a) Connect the intelligent tester to the DLC3.
(b) Start the engine.
(c) Select "DATA LIST" on the intelligent tester.

BC

DATA LIST: ABS/VSC

Item	Measurement Item / Range (Display)	Normal Condition
STOP LIGHT SW	Stop light switch / ON or OFF	ON: Brake pedal depressed OFF: Brake pedal released

(d) Check that the stop light observed on the intelligent tester changes when the brake pedal is depressed.
OK:
When the brake pedal is depressed, the intelligent tester displays "ON".

NG → **REPLACE ABS & TRACTION ACTUATOR ASSEMBLY**

OK

4	RECONFIRM DTC

(a) Clear the DTC.
(b) Start the engine.
(c) At a speed of 18 mph (30 km/h) or more, drive the vehicle and perform braking test (decelerate the vehicle by depressing the brake pedal).
(d) Check that the same DTC is recorded.

Result

Result	Proceed to
DTC is not output	A
DTC is output	B

HINT:
These DTCs may be restored due to a malfunction in the connector terminal connection, etc.

B → **REPLACE ABS & TRACTION ACTUATOR ASSEMBLY**

A

END

DTC	C1249/49	Open in Stop Light Switch Circuit

DESCRIPTION

The skid control ECU (housed in the ABS & TRACTION actuator assembly) inputs the stop light switch signal and the condition of brake operation.
The skid control ECU has an open detection circuit, which outputs this DTC when detecting an open in the stop light input line while the stop light switch is OFF.

DTC No.	DTC Detecting Condition	Trouble Area
C1249/49	When IG1 terminal voltage is 9.5 to 17.2 V, an open circuit of the stop light switch continues for 0.3 sec. or more.	• Stop light switch • Stop light switch circuit • ABS & TRACTION actuator assembly

WIRING DIAGRAM

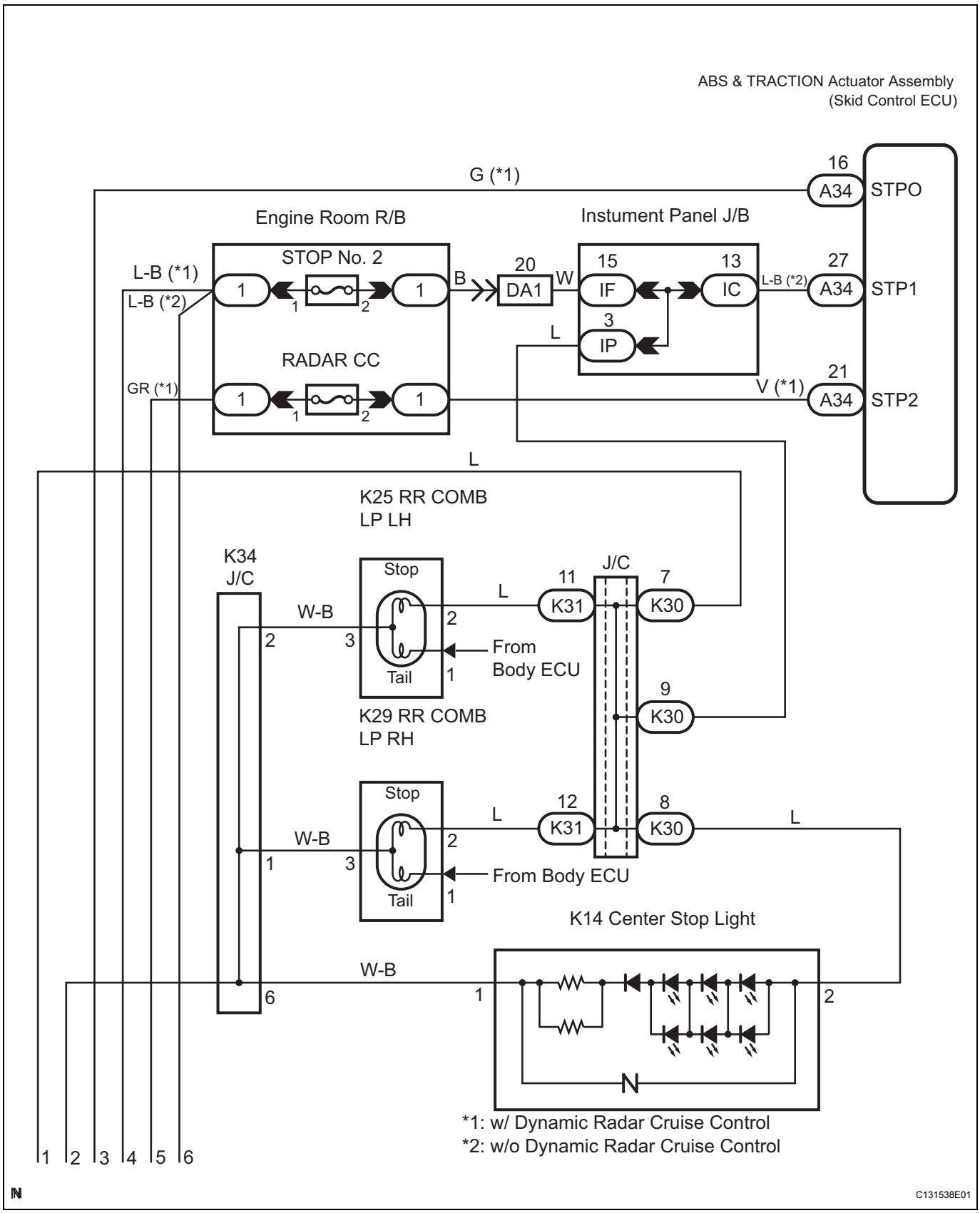

BC

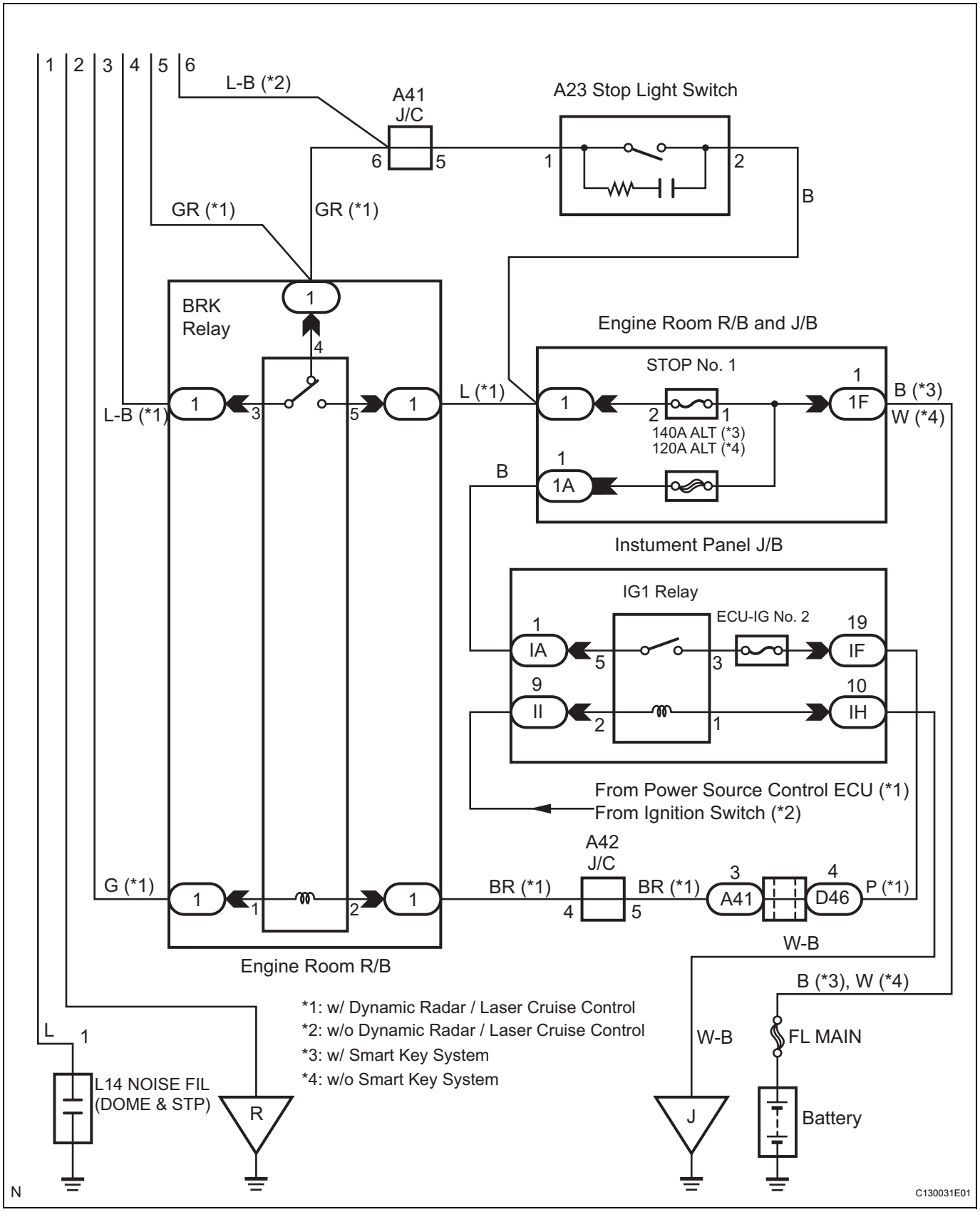

INSPECTION PROCEDURE

NOTICE:

When replacing the ABS & TRACTION actuator assembly, perform zero point calibration (See page BC-104).

HINT:
After steps 1, 2 and 3 are completed, start the inspection from step 4 when using the intelligent tester and start from step 5 when not using the intelligent tester.

1 CHECK STOP LIGHT SWITCH OPERATION

(a) Check that the stop light comes on when the brake pedal is depressed, and goes off when the brake pedal is released.
OK:
Stop light switch function is normal.
HINT:
Check the stop light bulb as it may have burnt out.

NG → **Go to step 9**

OK

2 INSPECT SKID CONTROL ECU (STP1 TERMINAL VOLTAGE)

(a) Disconnect the skid control ECU connector.
(b) Measure the voltage according to the value(s) in the table below.
Voltage

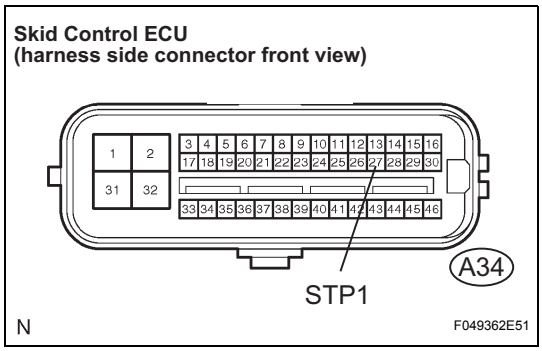

Tester Connection	Condition	Specified Condition
A34-27 (STP1) - Body ground	Stop light switch ON (Brake pedal depressed)	8 to 14 V
A34-27 (STP1) - Body ground	Stop light switch OFF (Brake pedal released)	Below 1.5 V

Result

Result	Proceed to
OK (w/ Dynamic radar cruise control)	A
OK (w/o Dynamic radar cruise control)	B
NG	C

B → **Go to step 8**

C → **REPAIR OR REPLACE HARNESS OR CONNECTOR (STP1 CIRCUIT)**

A

BC

3	CHECK HARNESS AND CONNECTOR (STP1 TO STP2 CIRCUIT)

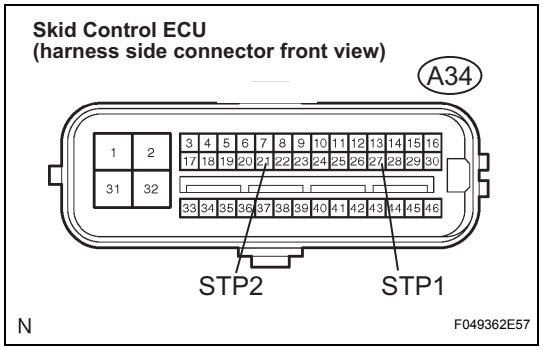

(a) Measure the resistance according to the value(s) in the table below.

Resistance

Tester Connection	Specified Condition
A34-27 (STP1) - A34-21 (STP2)	Below 1 Ω
A34-27 (STP1) - Body ground	1- kΩ or higher

NG → **REPAIR OR REPLACE HARNESS OR CONNECTOR (STP1 TO STP2 CIRCUIT)**

OK

4	PERFORM ACTIVE TEST BY INTELLIGENT TESTER (STOP LIGHT RELAY)

(a) Reconnect the skid control ECU connector.
(b) Connect the intelligent tester to the DLC3.
(c) Turn the ignition switch on (IG) and turn the intelligent tester main switch on.
(d) Select "ACTIVE TEST" on the intelligent tester.

DATA LIST: ABS/VSC

Item	Vehicle Condition / Test Details	Diagnostic Note
STOP LIGHT RELAY	Turns stop light operation relay ON/OFF	Observe rear combination light (Does not come on for 5 sec. or more)

(e) Check that "ON" and "OFF" of the stop light can be shown on the rear combination light by the intelligent tester.

OK:

The stop light turns on or off in accordance with the intelligent tester.

HINT:

Reinstall the sensors, connectors, etc. and restore the vehicle to its prior conditions before rechecking for DTCs.

OK → **Go to step 8**

NG

BC

5	INSPECT ENGINE ROOM R/B (BRAKE RELAY POWER SOURCE TERMINAL VOLTAGE)

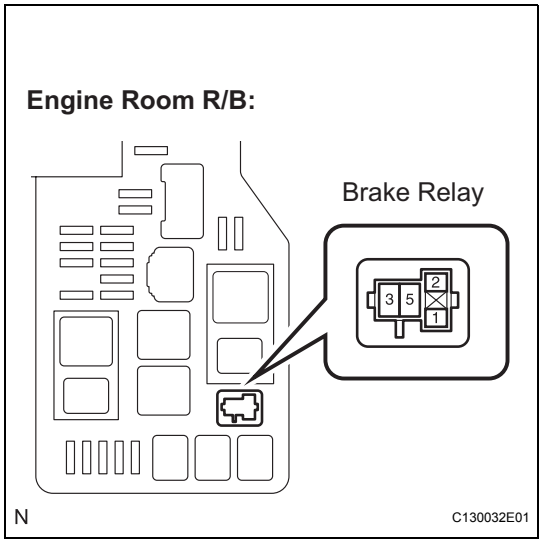

(a) Remove the brake relay.
(b) Turn the ignition switch on (IG).
(c) Measure the voltage according to the value(s) in the table below.

Voltage

Tester Connection	Condition	Specified Condition
2 - Body ground	IG switch on (IG)	8 to 14 V
5 - Body ground	IG switch on (IG)	8 to 14 V

NG → **REPAIR OR REPLACE HARNESS OR CONNECTOR (POWER SOURCE CIRCUIT)**

OK

6	INSPECT BRAKE RELAY

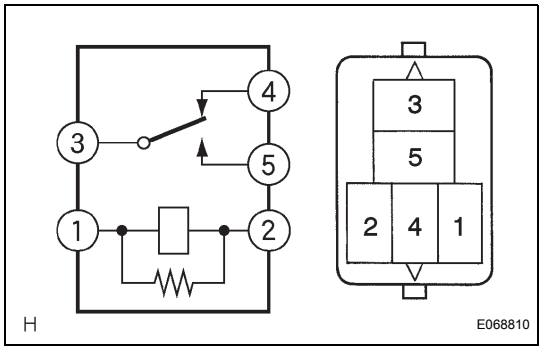

(a) Measure the resistance according to the value(s) in the table below.

Resistance

Tester Connection	Specified Condition
3 - 4	Below 1 Ω
3 - 5	10 kΩ or higher
3 - 4	10 kΩ or higher (When battery positive voltage is applied to terminal 1 and battery negative voltage to terminal 2.)
3 - 5	Below 1 Ω (When battery positive voltage is applied to terminal 1 and battery negative voltage to terminal 2.)

NG → **REPLACE BRAKE RELAY**

BC

OK

7	INSPECT SKID CONTROL ECU CONNECTOR (STPO TERMINAL VOLTAGE)

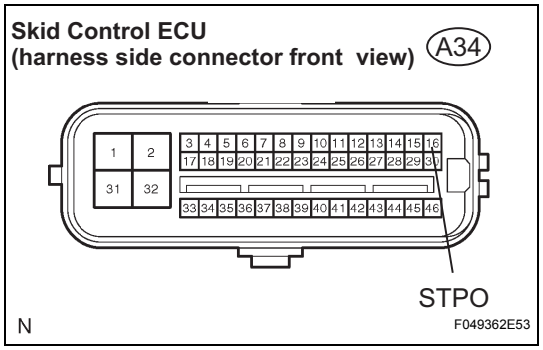

(a) Install the stop light operation (DAC) relay.
(b) Disconnect the skid control ECU connector.
(c) Turn the ignition switch on (IG).
(d) Measure the voltage according to the value(s) in the table below.

Voltage

Tester Connection	Condition	Specified Condition
S34-16 (STPO) - Body ground	IG switch on (IG)	10 to 14 V

NG → REPAIR OR REPLACE HARNESS OR CONNECTOR (STPO CIRCUIT)

OK

8	RECONFIRM DTC

(a) Clear the DTC.
(b) Depress the brake pedal several times to test the stop light circuit.
(c) Check if the same DTC is detected.
HINT:
Reinstall the sensors, connectors, etc. and restore the vehicle to its prior conditions before rechecking for DTCs.

Result

Result	Proceed to
DTC is output	A
DTC is not output	B

B → END

A

REPLACE ABS & TRACTION ACTUATOR ASSEMBLY

9 INSPECT STOP LIGHT SWITCH ASSEMBLY (POWER SOURCE TERMINAL VOLTAGE)

Stop Light Switch (harness side connector front view)

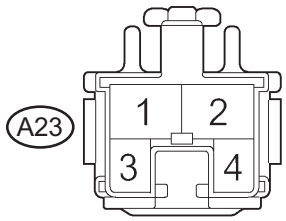

I042363E13

(a) Disconnect the stop light switch connector.
(b) Measure the voltage according to the value(s) in the table below.

Voltage

Tester Connection	Condition	Specified Condition
A23-2 - Body ground	Always	10 to 14 V

NG → **REPAIR OR REPLACE HARNESS OR CONNECTOR (POWER SOURCE CIRCUIT)**

OK

10 INSPECT STOP LIGHT SWITCH ASSEMBLY

Stop Light Switch Assembly

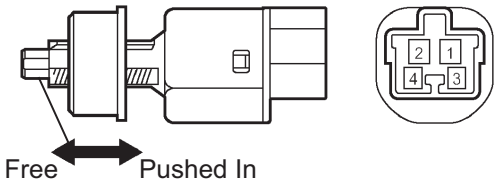

H

F047752E03

(a) Disconnect the stop light switch assembly connector.
(b) Measure the resistance according to the value(s) in the table below.

Resistance

Switch Condition	Tester Connection	Specified Condition
Switch pin free	1 - 2	Below 1 Ω
Switch pin pushed in	1 - 2	10 kΩ or higher

Result

Result	Proceed to
OK (w/ Dynamic radar cruise control)	A
OK (w/o Dynamic radar cruise control)	B
NG	C

B → **Go to step 14**

C → **REPLACE STOP LIGHT SWITCH ASSEMBLY**

BC

A

11 CHECK HARNESS AND CONNECTOR (STOP LIGHT SWITCH TO BRAKE RELAY)

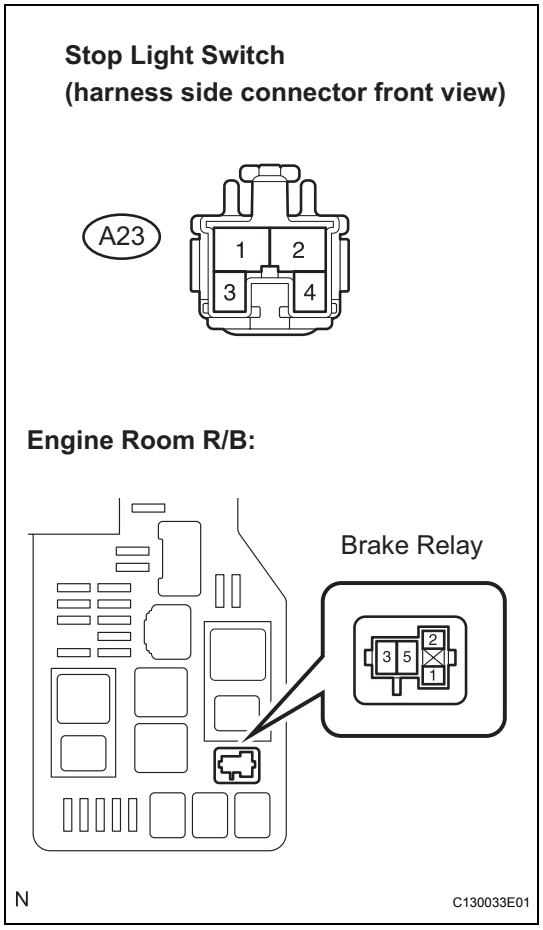

(a) Remove the brake relay.
(b) Measure the resistance according to the value(s) in the table below.

Resistance

Tester Connection	Specified Condition
A23-1 - Brake relay 4	Below 1 Ω
A23-1 - Body ground	10 kΩ or higher

NG → **REPAIR OR REPLACE HARNESS OR CONNECTOR (STOP LIGHT SWITCH TO BRAKE RELAY)**

OK

12 INSPECT BRAKE RELAY

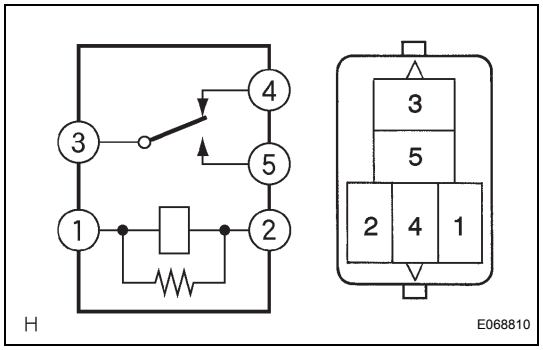

(a) Measure the resistance according to the value(s) in the table below.

Resistance

Tester Connection	Specified Condition
3 - 4	Below 1 Ω

NG → **REPLACE BRAKE RELAY**

OK

BC

13	CHECK HARNESS AND CONNECTOR (BETWEEN REAR COMBINATION LIGHT, BODY GROUND AND BRAKE RELAY)

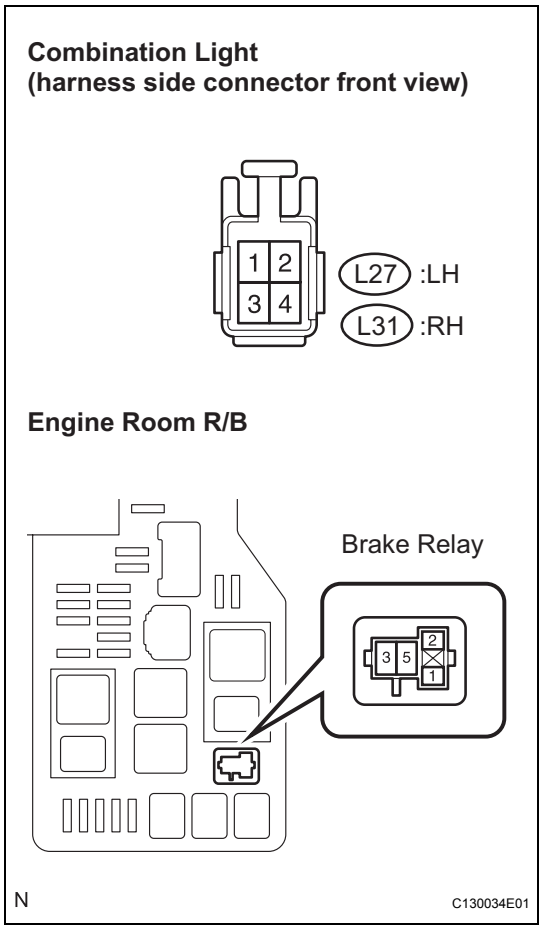

(a) Disconnect the rear combination light connector.
(b) Measure the resistance according to the value(s) in the table below.

Resistance

LH:

Tester Connection	Specified Condition
L27-2 - Brake relay 3	Below 1 Ω
L27-1 - Body ground	10 kΩ or higher
L27-3 - Body ground	Below 1 Ω

RH:

Tester Connection	Specified Condition
L31-2 - Brake relay 3	Below 1 Ω
L31-1 - Body ground	10 kΩ or higher
L31-3 - Body ground	Below 1 Ω

NG → **REPAIR OR REPLACE HARNESS OR CONNECTOR (STOP LIGHT CIRCUIT)**

OK

END

14	CHECK HARNESS AND CONNECTOR (STOP LIGHT SWITCH TO SKID CONTROL ECU)

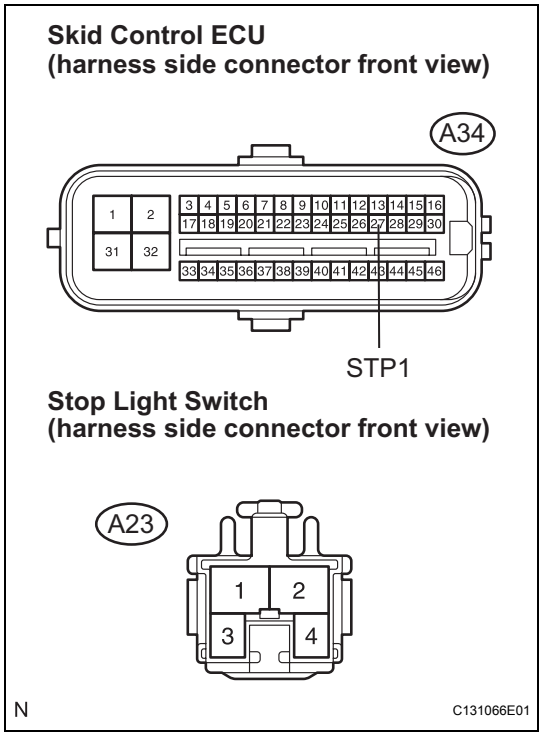

(a) Disconnect the stop light switch connector and skid control ECU connector.

(b) Measure the resistance according to the value(s) in the table below.

Resistance

Tester Connection	Specified Condition
A34-27 (STP1) - A23-1 (STP)	Below 1 Ω

NG → **REPAIR OR REPLACE HARNESS OR CONNECTOR (STOP LIGHT SWITCH TO SKID CONTROL ECU)**

OK

REPAIR OR REPLACE HARNESS OR CONNECTOR (STOP LIGHT CIRCUIT)

DTC	C1251/51	Open in Pump Motor Circuit

DESCRIPTION

The pump motor is located inside the ABS & TRACTION actuator assembly.

DTC No.	DTC Detecting Condition	Trouble Area
C1251/51	• Actuator pump motor does not operate properly. • Open in actuator pump motor circuit continues for at least 2 sec.	• ABS & TRACTION actuator assembly (GND circuit) • ABS & TRACTION actuator assembly (Motor circuit)

WIRING DIAGRAM

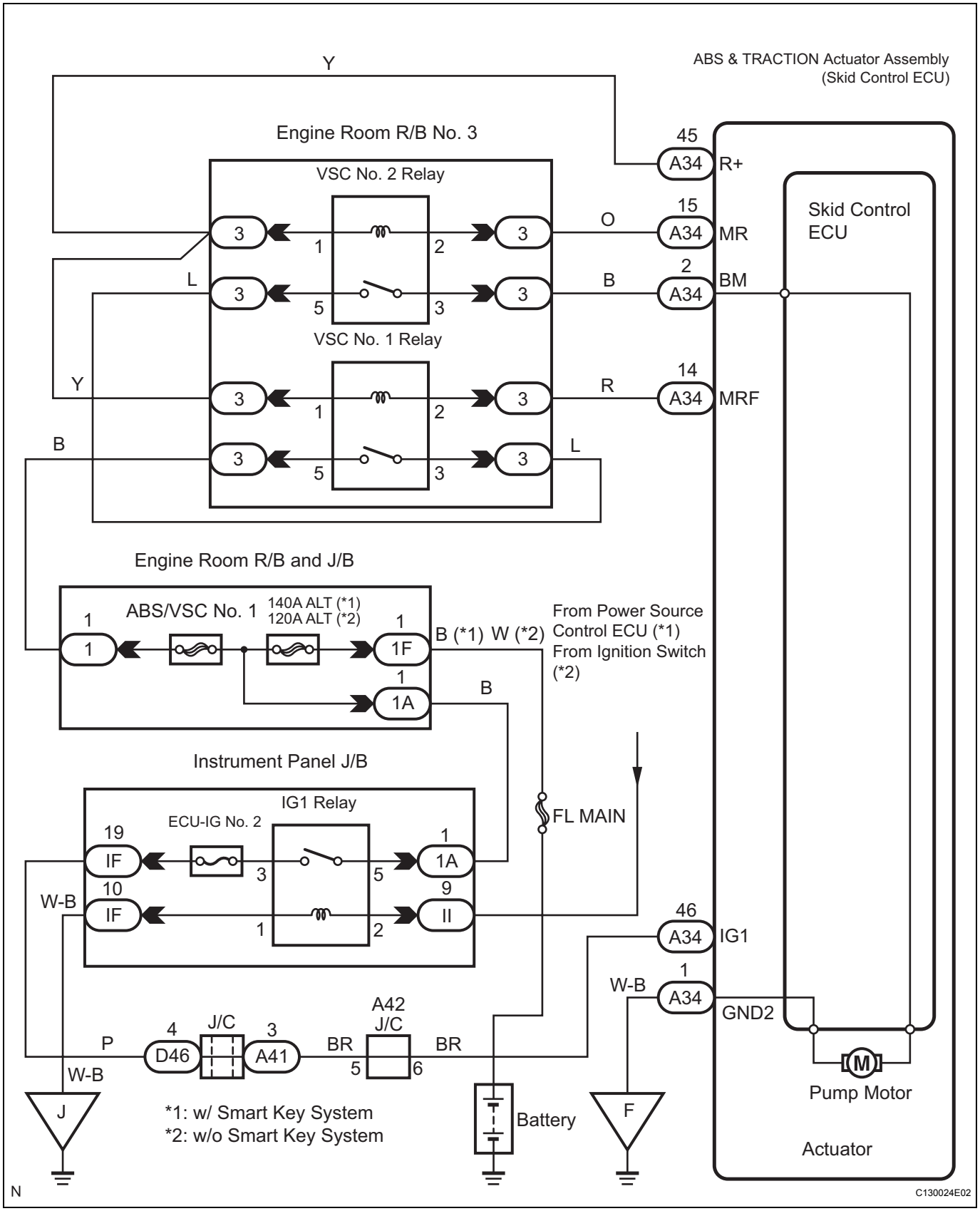

BC

INSPECTION PROCEDURE

NOTICE:

When replacing the ABS & TRACTION actuator assembly, perform zero point calibration (See page BC-104).

1 INSPECT SKID CONTROL ECU (GND TERMINAL CONTINUITY)

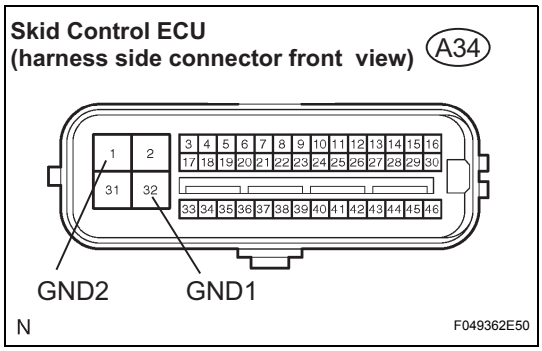

(a) Disconnect the skid control ECU connector.
(b) Measure the resistance according to the value(s) in the table below.

Resistance

Tester Connection	Specified Condition
A34-1 (GND2) - Body ground	Below 1 Ω

NG → **REPAIR OR REPLACE HARNESS OR CONNECTOR (GND2 CIRCUIT)**

OK

2 PERFORM ACTIVE TEST BY INTELLIGENT TESTER (ABS MOTOR RELAY OPERATION)

(a) Connect the intelligent tester to the DLC3.
(b) Start the engine.
(c) Select "ACTIVE TEST" on the intelligent tester.
(d) Check the operating sound of the ABS motor relay when operating it with the intelligent tester.

ACTIVE TEST: ABS/VSC

Item	Vehicle Condition / Test Details	Diagnostic Note
ABS MOT RELAY	Turns ABS motor relay ON or OFF	Operating sound of relay (clicking sound) is heard

OK:

The operating sound of the ABS motor relay is heard.

NG → **REPLACE ABS & TRACTION ACTUATOR ASSEMBLY**

OK

BC

3 RECONFIRM DTC

(a) Clear the DTC.
(b) Start the engine.
(c) Drive the vehicle at the speed of 4.3 mph (7 km/h) or more.
(d) Check that the same DTC is recorded.
HINT:
Reinstall the sensors, connectors, etc. and restore the vehicle to its prior conditions before rechecking for DTCs.

Result

Result	Proceed to
DTC is not output	A
DTC is output	B

HINT:

- If a speed signal of 4 mph (6 km/h) or more is input to the skid control ECU, with the ignition switch on (IG) and the stop light switch OFF, the ECU performs self diagnosis of the motor and solenoid circuits.
- If a normal system code is output (trouble code is not output), slightly jiggle the connectors, wire harness, and fuses of the ABS & TRACTION actuator assembly. Make sure that no DTCs are output.
- If any DTCs are output while jiggling a connector or wire harness of the ABS & TRACTION actuator assembly, inspect and repair the connector or wire harness.

HINT:

It is suspected that the DTCs were output due to a bad connection of the connector terminal.

B → **REPLACE ABS & TRACTION ACTUATOR ASSEMBLY**

A

END

DTC	U0073/94	Control Module Communication Bus OFF

DTC	U0100/65	Lost Communication with ECM / PCM

DTC	U0123/62	Lost Communication with Yaw Rate Sensor Module

DTC	U0124/95	Lost Communication with Lateral Acceleration Sensor Module

DTC	U0126/63	Lost Communication with Steering Angle Sensor Module

DESCRIPTION

The skid control ECU inputs the signals from the ECM, steering sensor, and yaw rate sensor via CAN communication system.

DTC No.	DTC Detecting Condition	Trouble Area
U0073/94	When either of the following is detected: 1. After the output of data from the skid control ECU is completed, the sending continues for 5 seconds or more. 2. The condition that bus OFF state occurs once or more within 100 ms occurs 10 times in succession. (Sent signals cannot be received.)	CAN communication system
U0100/65	When either of the following is detected: 1. With the IG1 terminal voltage 10 V or more and the vehicle speed 9 mph (15 km/h) or more, either of the following occurs 10 times in succession. – The condition that data cannot be sent to the ECM occurs once or more within 5 seconds. – The condition that data from the ECM cannot be received occurs once or more within 5 seconds.	CAN communication system (Skid control ECU to ECM)
U0123/62	When either of the following is detected: 1. With the IG1 terminal voltage 10 V or more, data from the yaw rate sensor cannot be received for 1 second or more. 2. With the IG1 terminal voltage 10 V or more, the following occurs 10 times in succession. – The condition that data from the yaw rate sensor cannot be received occurs once or more within 5 seconds.	CAN communication system (Skid control ECU to yaw rate and acceleration sensor)
U0124/95	When either of the following is detected: 1. With the IG1 terminal voltage 10 V or more, data from the deceleration sensor cannot be received for 1 second or more. 2. With the IG1 terminal voltage 10 V or more, the following occurs 10 times in succession. – The condition that data from the deceleration sensor cannot be received occurs once or more within 5 seconds.	CAN communication system (Skid control ECU to yaw rate and acceleration sensor)

DTC No.	DTC Detecting Condition	Trouble Area
U0126/63	When either of the following is detected: 1. With the IG1 terminal voltage 10 V or more, data from the steering sensor cannot be received for 1 second or more. 2. With the IG1 terminal voltage 10 V or more, the following occurs 10 times in succession. – The condition that data from the steering sensor cannot be received occurs once or more within 5 seconds.	CAN communication system (Skid control ECU to steering angle sensor)

INSPECTION PROCEDURE

1 CHECK HARNESS AND CONNECTOR (MOMENTARY INTERRUPTION)

(a) Using the intelligent tester, check for any momentary interruption in the wire harness and connector corresponding to a DTC (See page BC-103).

DATA LIST: ABS/VSC/TRC

Item	Measurement Item / Range (Display)	Normal Condition
EFI COM	EFI communication open detection / OPN DET or NORMAL	OPN DET: Momentary interruption NORMAL: Normal
STEERING SEN	STEERING SEN Steering sensor open detection / OPN DET or NORMAL	OPN DET: Momentary interruption NORMAL: Normal
YAWRATE SEN	Yaw rate sensor open detection / OPN DET or NORMAL	OPN DET: Momentary interruption NORMAL: Normal

OK:
There are no momentary interruptions.
HINT:
Perform the above inspection before removing the sensor and connector.

NG → **Go to step 3**

OK

2 RECONFIRM DTC

(a) Record the output DTCs (for ABS, VSC, and CAN communication).
HINT:
If the CAN communication system DTC and the relevant sensor DTCs are output simultaneously, troubleshoot the relevant sensor DTCs (for ABS and VSC) after the CAN communication system returns to normal.

NEXT

REPAIR CAN COMMUNICATION SYSTEM

3 REPAIR OR REPLACE HARNESS AND CONNECTOR

(a) Repair or replace the harness and connector.

(b) Check for any momentary interruption between the skid control ECU and each sensor or ECM (See page BC-103).
(c) Check that there is no momentary interruption.

NEXT

4	RECONFIRM DTC

(a) Clear the DTC.
(b) Start the engine.
(c) Drive the vehicle and turn the steering wheel to the right and left at a speed of 9 mph (15 km/h) or more.
(d) Check that no CAN communication system DTC is output.
(e) If ABS and VSC DTCs are output, record them.

Result

Result	Proceed to
DTC output for the CAN communication system	A
No DTC is output (ABS and VSC DTCs are output)	B
No DTC is output (No ABS and VSC DTCs are output)	C

HINT:
- The CAN communication system must be normal when repairing each sensor DTC (for ABS and VSC).
- These DTCs may be restored due to a malfunction in the connector terminal connection, etc.

B → REPAIR CIRCUIT INDICATED BY OUTPUT CODE

C → END

A

REPAIR CAN COMMUNICATION SYSTEM

ABS Warning Light Remains ON

DESCRIPTION

If any of the following is detected, the ABS warning light remains on.

- The skid control ECU connectors are disconnected from the skid control ECU.
- The combination meter connector is disconnected from the combination meter assembly.
- There is a malfunction in the skid control ECU internal circuit.
- There is an open in the harness between the combination meter and the skid control ECU.

HINT:

In some cases, the intelligent tester cannot be used when the skid control ECU is abnormal.

WIRING DIAGRAM

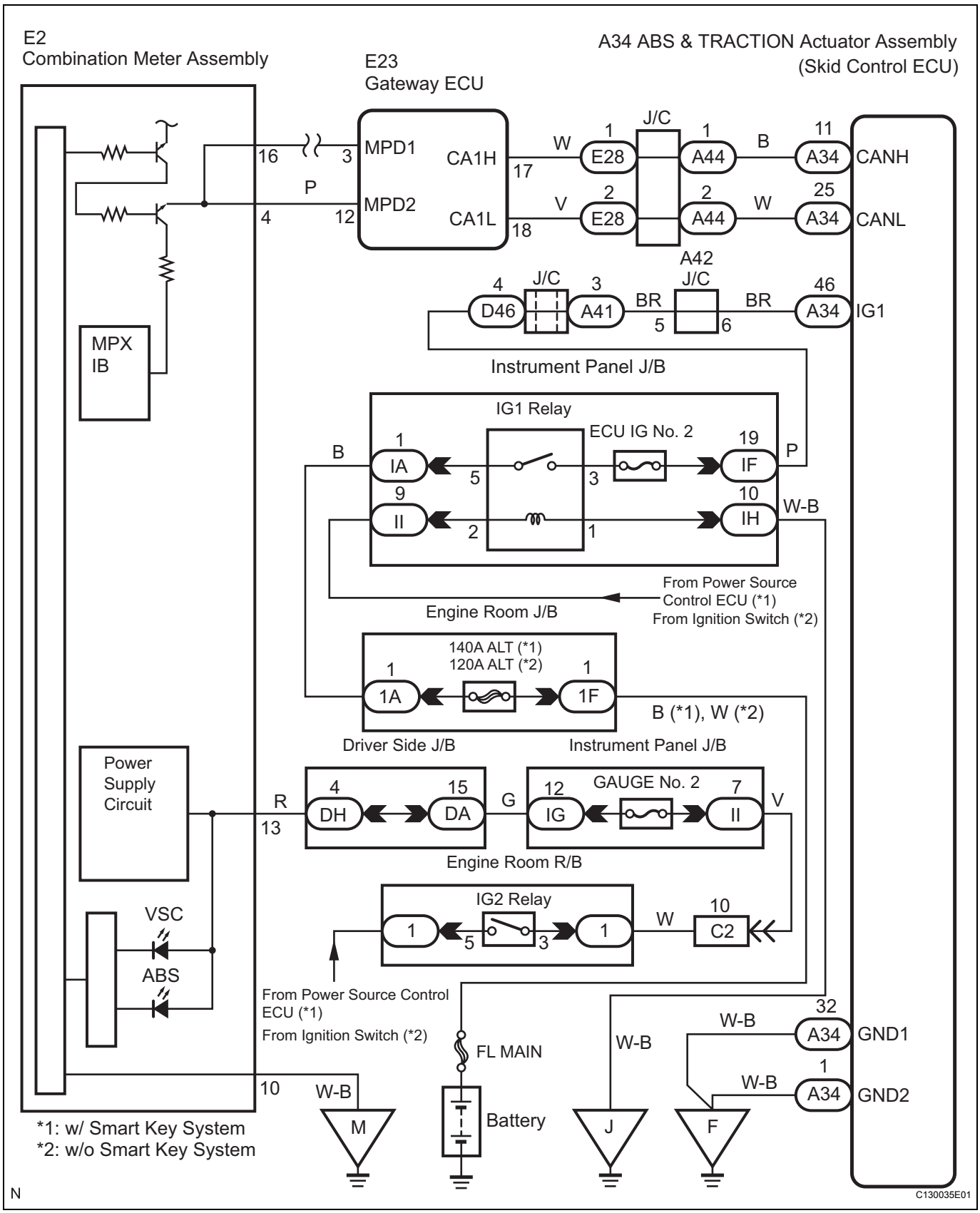

BC

INSPECTION PROCEDURE

NOTICE:

When replacing the ABS & TRACTION actuator assembly, perform zero point calibration (See page BC-104).

1	INSPECT CAN COMMUNICATION SYSTEM

(a) Check if the CAN communication system DTC is output (See page CA-15).

Result

Result	Proceed to
DTC is not output	A
DTC is output	B

B → REPAIR CAN COMMUNICATION SYSTEM

A

2	INSPECT MULTIPLEX COMMUNICATION SYSTEM

(a) Check if the multiplex communication system DTC is output (See page MP-23).

Result

Result	Proceed to
DTC is not output	A
DTC is output	B

B → REPAIR MULTIPLEX COMMUNICATION SYSTEM

A

3	INSPECT IF SKID CONTROL ECU CONNECTOR IS SECURELY CONNECTED

(a) Check the skid control ECU connector's connecting condition.

OK:

The connector should be securely connected.

NG → CONNECT CONNECTOR TO ECU CORRECTLY

OK

4	INSPECT BATTERY

(a) Check the battery voltage.

Voltage:

11 to 14 V

NG → INSPECT CHARGING SYSTEM

BC

OK

5 INSPECT SKID CONTROL ECU TERMINAL VOLTAGE (IG1 TERMINAL VOLTAGE)

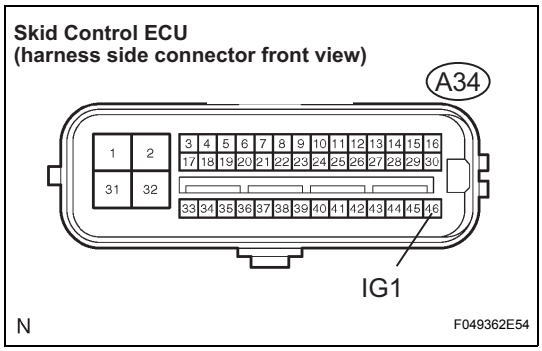

(a) Disconnect the skid control ECU connector.
(b) Turn the ignition switch on (IG).
(c) Measure the voltage according to the value(s) in the table below.

Voltage

Tester Connection	Condition	Specified Condition
A34-46 (IG1) - Body ground	Ignition switch on (IG)	10 to 14 V

NG → REPAIR OR REPLACE HARNESS OR CONNECTOR (IG1 CIRCUIT)

OK

6 INSPECT SKID CONTROL ECU (GND TERMINAL CONTINUITY)

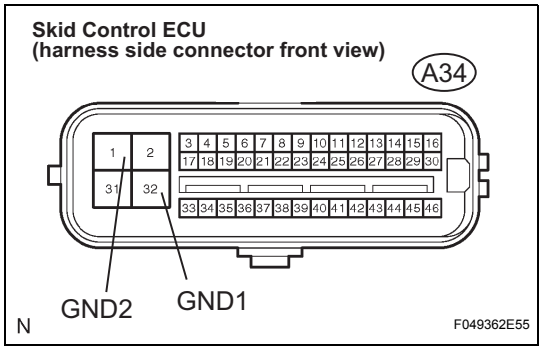

(a) Disconnect the skid control ECU connector.
(b) Measure the resistance according to the value(s) in the table below.

Resistance

Tester Connection	Specified Condition
A34-32 (GND1) - Body ground	Below 1 Ω
A34-1 (GND2) - Body ground	Below 1 Ω

NG → REPAIR OR REPLACE HARNESS OR CONNECTOR (GND CIRCUIT)

OK

7 INSPECT COMBINATION METER ASSEMBLY

(a) Check the combination meter assembly (See page ME-13).

HINT:
If troubleshooting has been carried out according to the PROBLEM SYMPTOMS TABLE, refer back to the table and proceed to the next step before replacing the part (See page BC-117).

NG → REPLACE COMBINATION METER ASSEMBLY

OK

REPLACE ABS & TRACTION ACTUATOR ASSEMBLY

BC

ABS Warning Light does not Come ON

WIRING DIAGRAM

See page BC-203.

INSPECTION PROCEDURE

NOTICE:

When replacing the ABS & TRACTION actuator assembly, perform zero point calibration (See page BC-104).

1 INSPECT CAN COMMUNICATION SYSTEM

(a) Check if the CAN communication system DTC is output (See page CA-15).

Result

Result	Proceed to
DTC is not output	A
DTC is output	B

B → **REPAIR CAN COMMUNICATION SYSTEM**

A

2 INSPECT MULTIPLEX COMMUNICATION SYSTEM

(a) Check if the multiplex communication system DTC is output (See page MP-23).

Result

Result	Proceed to
DTC is not output	A
DTC is output	B

B → **REPAIR MULTIPLEX COMMUNICATION SYSTEM**

A

3 INSPECT ABS WARNING LIGHT

(a) Disconnect the skid control ECU connector.
(b) Turn the ignition switch on (IG).
(c) Check that the ABS warning light comes on.

OK:

ABS warning light comes on.

HINT:

If troubleshooting has been carried out according to the PROBLEM SYMPTOMS TABLE, refer back to the table and proceed to the next step before replacing the part (See page BC-117).

BC

NG → Go to step 4

OK

REPLACE ABS & TRACTION ACTUATOR ASSEMBLY

4	INSPECT COMBINATION METER ASSEMBLY

(a) Check the combination meter assembly (See page ME-13).

HINT:
If troubleshooting has been carried out according to the PROBLEM SYMPTOMS TABLE, refer back to the table and proceed to the next step (See page BC-117).

NG → REPLACE COMBINATION METER ASSEMBLY

OK

END

VSC Warning Light Remains ON

DESCRIPTION

If the ECU stores DTC, the VSC warning light comes on in the combination meter.
The skid control ECU is connected to the combination meter via CAN and Multiplex communications.

WIRING DIAGRAM

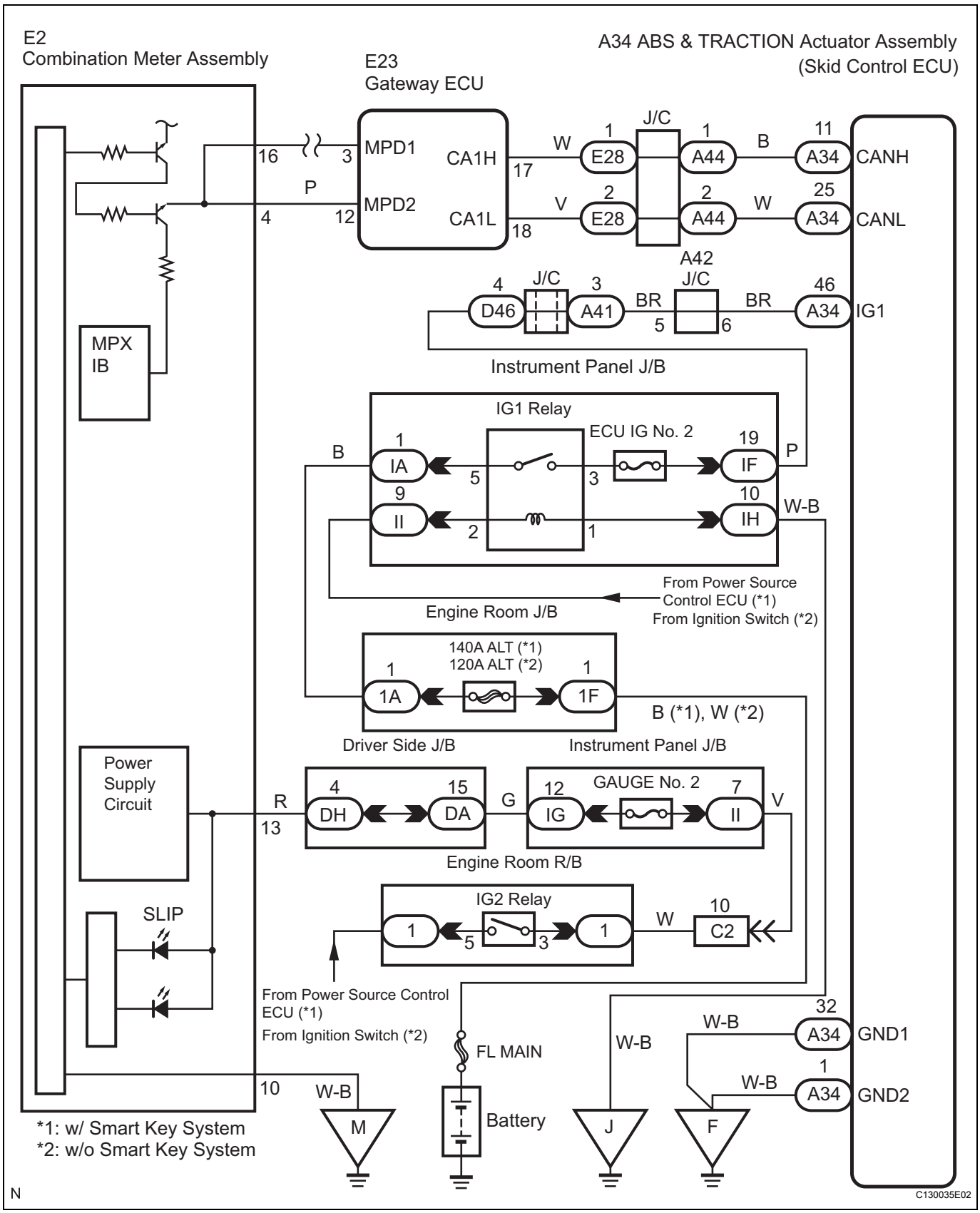

BC

INSPECTION PROCEDURE

NOTICE:

When replacing the ABS & TRACTION actuator assembly, perform zero point calibration (See page BC-104).

1	INSPECT CAN COMMUNICATION SYSTEM

(a) Check if the CAN communication system DTC is output (See page CA-15).

Result

Result	Proceed to
DTC is not output	A
DTC is output	B

B → REPAIR CAN COMMUNICATION SYSTEM

A

2	INSPECT MULTIPLEX COMMUNICATION SYSTEM

(a) Check if the multiplex communication system DTC is output (See page MP-23).

Result

Result	Proceed to
DTC is not output	A
DTC is output	B

B → REPAIR MULTIPLEX COMMUNICATION SYSTEM

A

3	INSPECT IF SKID CONTROL ECU CONNECTOR IS SECURELY CONNECTED

(a) Check the skid control ECU connector's connecting condition.

OK:

The connector should be securely connected.

NG → CONNECT CONNECTOR TO ECU CORRECTLY

OK

4	INSPECT BATTERY

(a) Check the battery voltage.

Voltage:

11 to 14 V

NG → INSPECT CHARGING SYSTEM

BC

OK

5	INSPECT COMBINATION METER ASSEMBLY

(a) Check the combination meter assembly (See page ME-13).
HINT:
If troubleshooting has been carried out according to the PROBLEM SYMPTOMS TABLE, refer back to the table and proceed to the next step before replacing the part (See page BC-117).

NG → REPLACE COMBINATION METER ASSEMBLY

OK

REPLACE ABS & TRACTION ACTUATOR ASSEMBLY

VSC Warning Light does not Come ON

DESCRIPTION

See page BC-208.

WIRING DIAGRAM

See page BC-209.

INSPECTION PROCEDURE

NOTICE:

When replacing the ABS & TRACTION actuator assembly, perform zero point calibration (See page BC-104).

1	INSPECT CAN COMMUNICATION SYSTEM

(a) Check if the CAN communication system DTC is output (See page CA-15).

Result

Result	Proceed to
DTC is not output	A
DTC is output	B

B → REPAIR CAN COMMUNICATION SYSTEM

A

2	INSPECT MULTIPLEX COMMUNICATION SYSTEM

(a) Check if the multiplex communication system DTC is output (See page MP-23).

Result

Result	Proceed to
DTC is not output	A
DTC is output	B

B → REPAIR MULTIPLEX COMMUNICATION SYSTEM

A

3	INSPECT VSC WARNING LIGHT

(a) Connect the intelligent tester to the DLC3.
(b) Start the engine.
(c) Select "ACTIVE TEST" on the intelligent tester.

ACTIVE TEST: ABS/VSC

Item	Vehicle Condition / Test Details	Normal Condition
VSC WARN LIGHT	Turn VSC warning light ON/OFF	Observe combination meter

BC

(d) Check that "ON" and "OFF" of the VSC warning light are indicated on the combination meter when using the intelligent tester.
OK:
The VSC warning light turns on or off in accordance with the intelligent tester.
HINT:
If troubleshooting has been carried out according to the PROBLEM SYMPTOMS TABLE, refer back to the table and proceed to the next step before replacing the part (See page BC-117).

NG → **Go to step 4**

OK →

REPLACE ABS & TRACTION ACTUATOR ASSEMBLY

4	INSPECT COMBINATION METER ASSEMBLY

(a) Check the combination meter assembly (See page ME-13).
HINT:
If troubleshooting has been carried out according to the PROBLEM SYMPTOMS TABLE, refer back to the table and proceed to the next step (See page BC-117).

NG → **REPLACE COMBINATION METER ASSEMBLY**

OK →

END

Brake Warning Light Remains ON

DESCRIPTION

If any of the following is detected, the BRAKE warning light remains on:

- The skid control ECU connector is disconnected from the skid control ECU.
- The combination meter connector is disconnected from the combination meter assembly.
- The brake fluid level is insufficient.
- The parking brake is applied.
- The EBD is defective.
- There is a malfunction in the skid control ECU internal circuit.

WIRING DIAGRAM

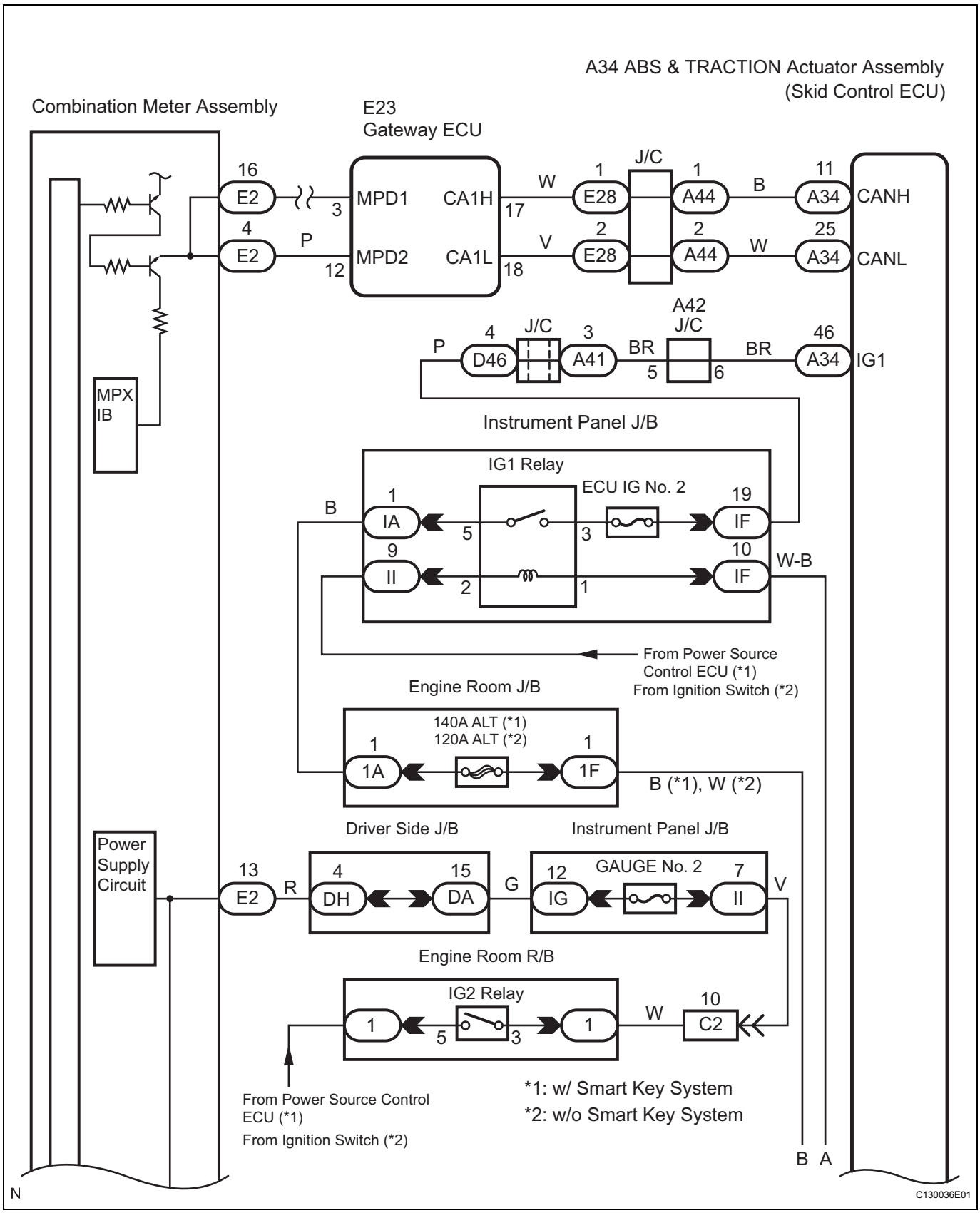

BC

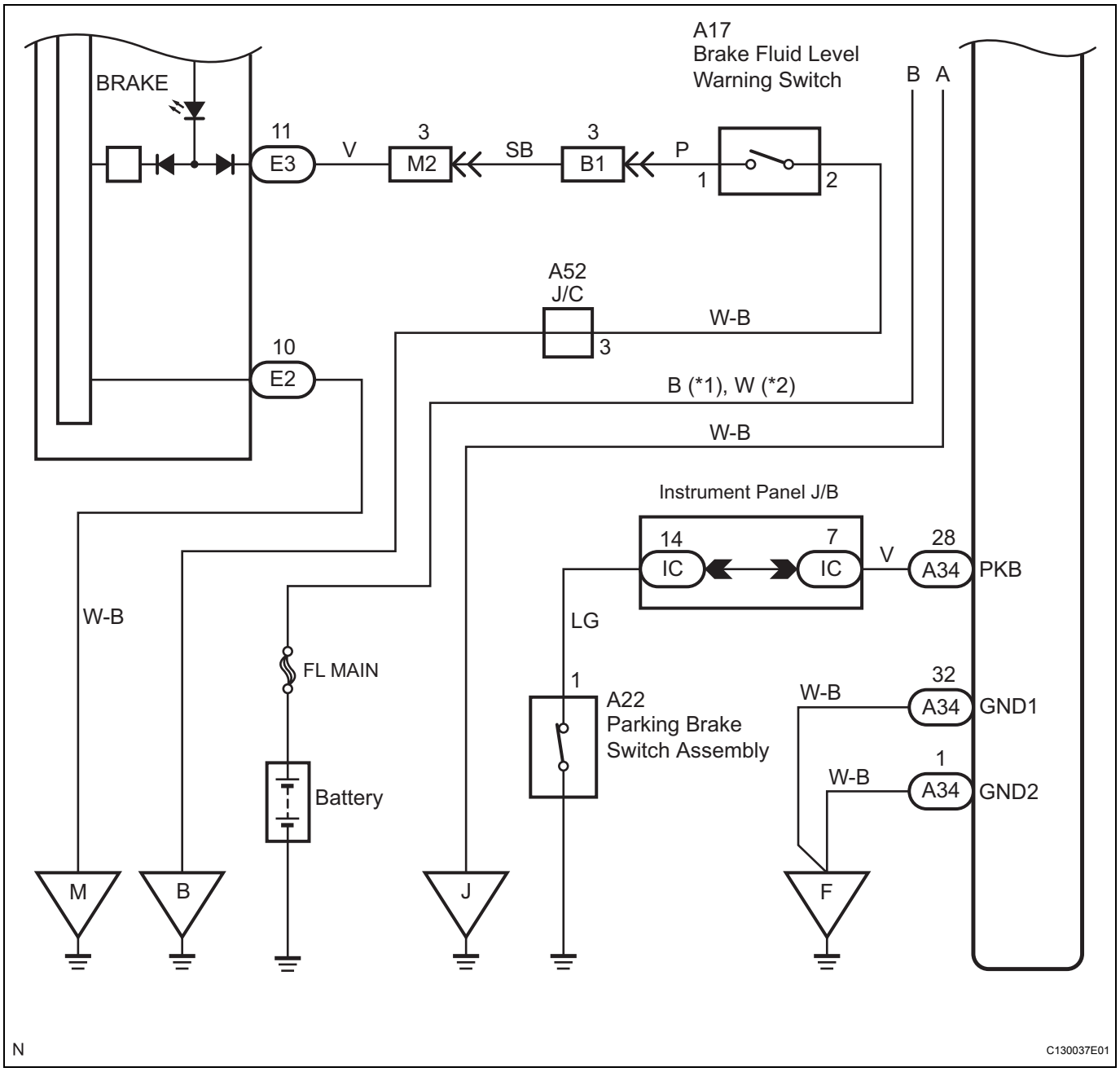

INSPECTION PROCEDURE

NOTICE:

When replacing the ABS & TRACTION actuator assembly, perform zero point calibration (See page BC-104).

BC

1	CHECK DTC

(a) Check if the ABS and/or VSC DTC is output (See page BC-121).

Result

Result	Proceed to
DTC is not output	A
DTC is output	B

B → REPAIR CIRCUIT INDICATED BY OUTPUT CODE

A

2	INSPECT CAN COMMUNICATION SYSTEM

(a) Check if the CAN communication system DTC is output (See page CA-15).

Result

Result	Proceed to
DTC is not output	A
DTC is output	B

B → REPAIR CAN COMMUNICATION SYSTEM

A

3	INSPECT MULTIPLEX COMMUNICATION SYSTEM

(a) Check if the multiplex communication system DTC is output (See page MP-23).

Result

Result	Proceed to
DTC is not output	A
DTC is output	B

B → REPAIR MULTIPLEX COMMUNICATION SYSTEM

A

4	INSPECT IF SKID CONTROL ECU CONNECTOR IS SECURELY CONNECTED

(a) Check the skid control ECU connector's connecting condition.
OK:
The connector should be securely connected.

BC

NG → CONNECT CONNECTOR TO ECU CORRECTLY

OK

5	INSPECT BATTERY

(a) Check the battery voltage.
Voltage:
11 to 14 V

NG → INSPECT CHARGING SYSTEM

OK

6 INSPECT SKID CONTROL ECU TERMINAL VOLTAGE (IG1 TERMINAL VOLTAGE)

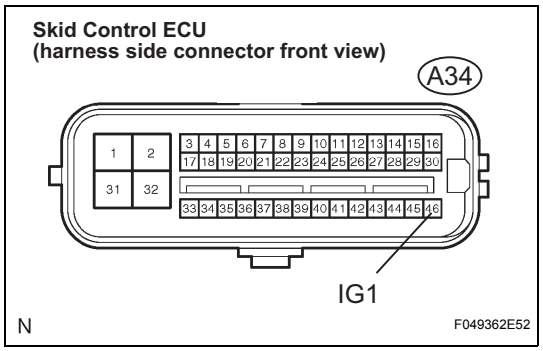

(a) Disconnect the skid control ECU connector.
(b) Turn the ignition switch on (IG).
(c) Measure the voltage according to the value(s) in the table below.

Voltage

Tester Connection	Condition	Specified Condition
A34-46 (IG1) - Body ground	Ignition switch on (IG)	10 to 14 V

NG → REPAIR OR REPLACE HARNESS OR CONNECTOR (IG1 CIRCUIT)

OK

7 INSPECT SKID CONTROL ECU ASSEMBLY (GND TERMINAL CONTINUITY)

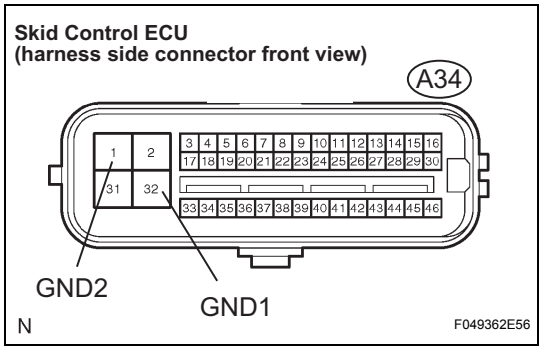

(a) Disconnect the skid control ECU connector.
(b) Measure the resistance according to the value(s) in table below.

Resistance

Tester Connection	Specified Condition
A34-1 (GND2) - Body ground	Below 1 Ω
A34-32 (GND1) - Body ground	Below 1 Ω

NG → REPAIR OR REPLACE HARNESS OR CONNECTOR (GND CIRCUIT)

OK

8 INSPECT PARKING BRAKE SWITCH ASSEMBLY

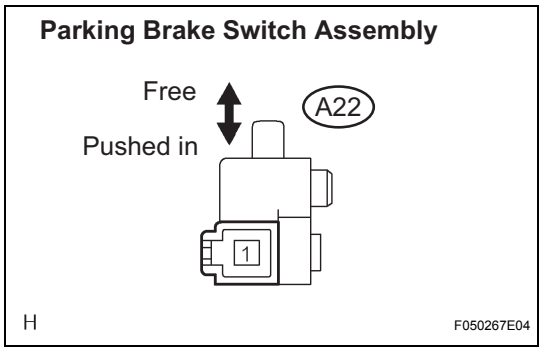

(a) Disconnect the parking brake switch connector.
(b) Measure the resistance according to the value(s) in the table below.

Resistance

Tester Connection	Condition	Specified Condition
A22-1 - Body ground	Parking brake switch ON (Switch pin free)	Below 1 Ω
A22-1 - Body ground	Parking brake switch OFF (Switch pin pushed in)	10 kΩ or higher

NG → REPLACE PARKING BRAKE SWITCH ASSEMBLY

BC

OK

9	CHECK HARNESS AND CONNECTOR (SKID CONTROL ECU TO PARKING BRAKE SWITCH ASSEMBLY)

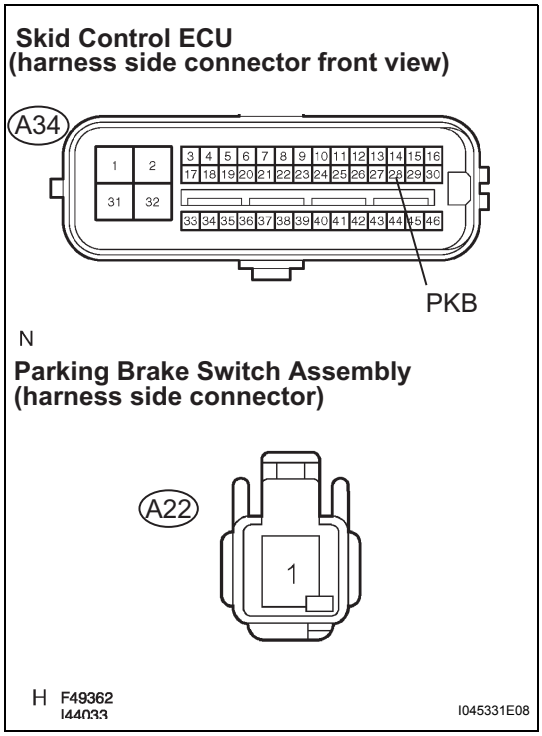

(a) Disconnect the skid control ECU connector and parking brake switch.
(b) Measure the resistance according to the value(s) in the table below.

Resistance

Tester Connection	Specified Condition
A34-28 (PKB) - A22-1	Below 1 Ω
A34-28 (PKB) - Body ground	10 kΩ or higher

NG → REPAIR OR REPLACE HARNESS OR CONNECTOR (PKB CIRCUIT)

OK

10	INSPECT BRAKE FLUID LEVEL WARNING SWITCH

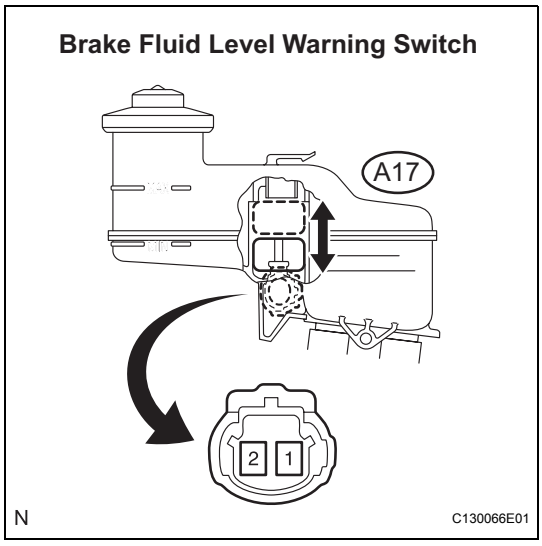

(a) Remove the reservoir tank cap and strainer.
(b) Disconnect the brake fluid level warning switch connector.
(c) Measure the resistance according to the value(s) in the table below.

Resistance

Tester Connection	Condition	Specified Condition
(A17-1) - (A17-2)	Proper	1.8 to 2.16 kΩ
(A17-1) - (A17-2)	Below min. level	Below 1 Ω

NG → REPLACE MASTER CYLINDER RESERVOIR SUB-ASSEMBLY

OK

BC

11	CHECK HARNESS AND CONNECTOR (BRAKE FLUID LEVEL WARNING SWITCH TO COMBINATION METER)

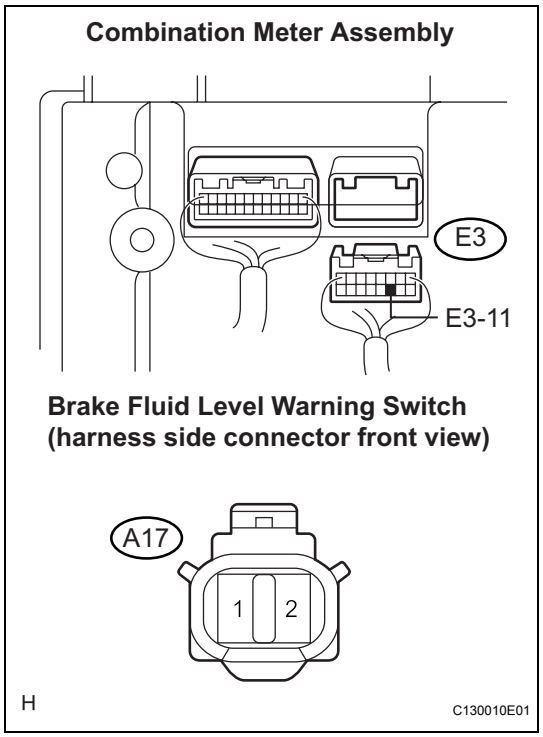

(a) Disconnect the combination meter connector.
(b) Measure the resistance according to the value(s) in the table below.

Resistance

Tester Connection	Specified Condition
E3-11 - A17-1	Below 1 Ω
A17-2 - Body ground	Below 1 Ω
E3-11 - Body ground	10kΩ or higher

NG → **REPAIR OR REPLACE HARNESS OR CONNECTOR (BRAKE FLUID LEVEL WARNING SWITCH CIRCUIT)**

OK

12	INSPECT COMBINATION METER ASSEMBLY

(a) Check the combination meter assembly (See page ME-13).
HINT:
If troubleshooting has been carried out according to the PROBLEM SYMPTOMS TABLE, refer back to the table and proceed to the next step before replacing the part (See page BC-117).

NG → **REPLACE COMBINATION METER ASSEMBLY**

OK

REPLACE ABS & TRACTION ACTUATOR ASSEMBLY

BC

Brake Warning Light does not Come ON

DESCRIPTION

See page BC-214.

WIRING DIAGRAM

See page BC-215.

INSPECTION PROCEDURE

NOTICE:

When replacing the ABS & TRACTION actuator assembly, perform zero point calibration (See page BC-104).

1	INSPECT CAN COMMUNICATION SYSTEM

(a) Check if the CAN communication system DTC is output (See page CA-15).

Result

Result	Proceed to
DTC is not output	A
DTC is output	B

B → REPAIR CAN COMMUNICATION SYSTEM

A

2	INSPECT MULTIPLEX COMMUNICATION SYSTEM

(a) Check if the multiplex communication system DTC is output (See page MP-23).

Result

Result	Proceed to
DTC is not output	A
DTC is output	B

B → REPAIR MULTIPLEX COMMUNICATION SYSTEM

A

3	INSPECT BRAKE WARNING LIGHT

(a) Disconnect the skid control ECU connector.
(b) Turn the ignition switch on (IG).
(c) Check that the BRAKE warning light comes on.

OK:

BRAKE warning light comes on.

BC

HINT:
If troubleshooting has been carried out according to the PROBLEM SYMPTOMS TABLE, refer back to the table and proceed to the next step before replacing the part (See page BC-117).

NG → **Go to step 4**

OK →

REPLACE ABS & TRACTION ACTUATOR ASSEMBLY

4	INSPECT COMBINATION METER ASSEMBLY

(a) Check the combination meter assembly (See page ME-13).
HINT:
If troubleshooting has been carried out according to the PROBLEM SYMPTOMS TABLE, refer back to the table and proceed to the next step (See page BC-117).

NG → **REPLACE COMBINATION METER ASSEMBLY**

OK →

END

Slip Indicator Light Remains ON

DESCRIPTION

The SLIP indicator blinks during VSC and/or TRAC operation.
When the system fails, the SLIP indicator comes on to warn the driver.
The SLIP indicator comes on when traction control is terminated by pressing the traction control switch.

WIRING DIAGRAM

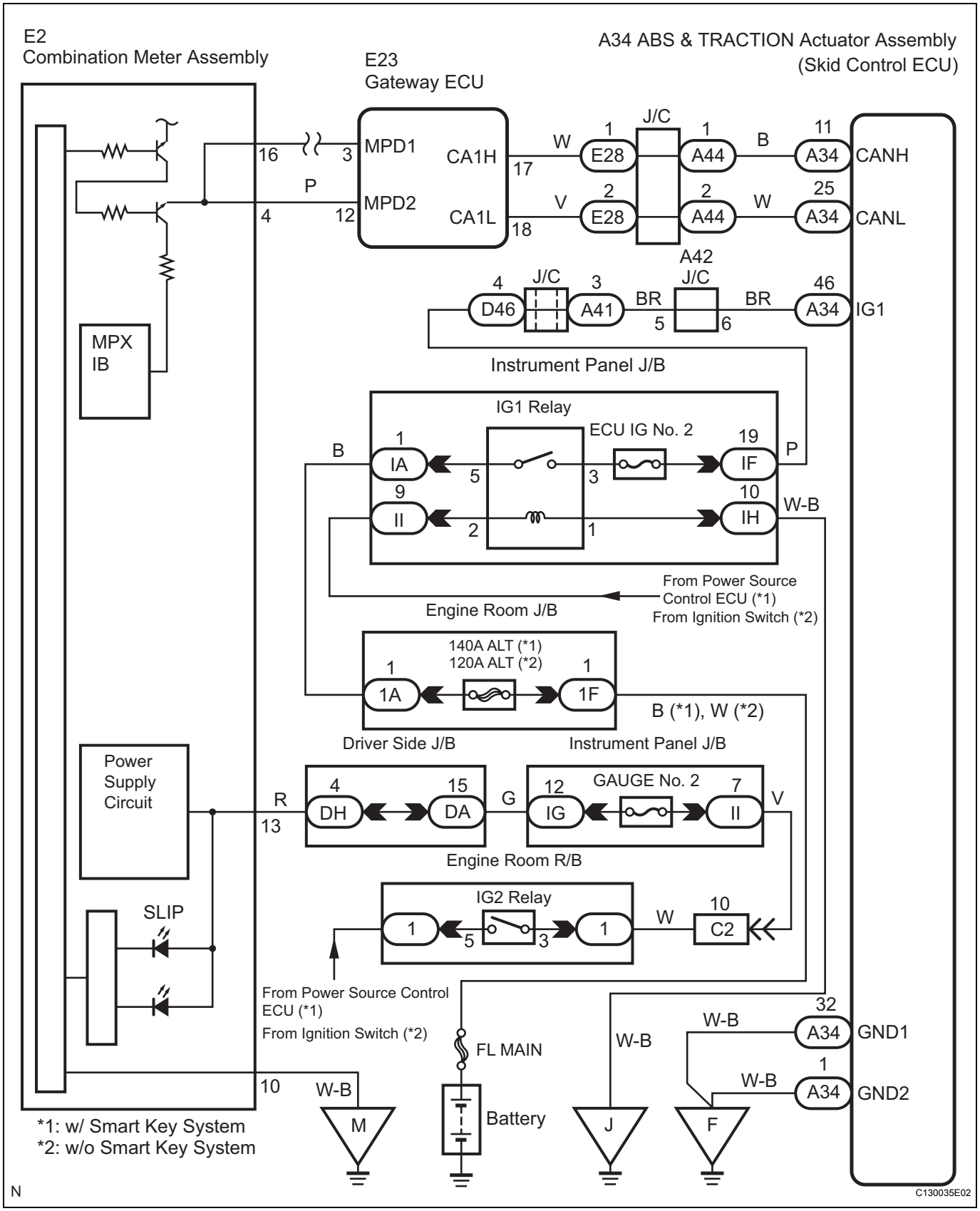

BC

INSPECTION PROCEDURE

NOTICE:

When replacing the ABS & TRACTION actuator assembly, perform zero point calibration (See page BC-104).

1	CHECK DTC

(a) Check if the ABS and/or VSC DTC is output.

Result

Result	Proceed to
DTC is not output	A
DTC is output	B

B → REPAIR CIRCUIT INDICATED BY OUTPUT CODE

A

2	INSPECT CAN COMMUNICATION SYSTEM

(a) Check if the CAN communication system DTC is output (See page CA-15).

Result

Result	Proceed to
DTC is not output	A
DTC is output	B

B → REPAIR CAN COMMUNICATION SYSTEM

A

3	INSPECT MULTIPLEX COMMUNICATION SYSTEM

(a) Check if the multiplex communication system DTC is output (See page MP-23).

Result

Result	Proceed to
DTC is not output	A
DTC is output	B

BC

B → REPAIR MULTIPLEX COMMUNICATION SYSTEM

A

4	INSPECT COMBINATION METER ASSEMBLY

(a) Check the combination meter assembly (See page ME-13).

HINT:
If troubleshooting has been carried out according to the PROBLEM SYMPTOMS TABLE, refer back to the table and proceed to the next step before replacing the part (See page BC-117).

NG → **REPLACE COMBINATION METER ASSEMBLY**

OK

REPLACE ABS & TRACTION ACTUATOR ASSEMBLY

Slip Indicator Light does not Come ON

DESCRIPTION

See page BC-223.

WIRING DIAGRAM

See page BC-224.

INSPECTION PROCEDURE

NOTICE:

When replacing the ABS & TRACTION actuator assembly, perform zero point calibration (See page BC-104).

1	INSPECT CAN COMMUNICATION SYSTEM

(a) Check if the CAN communication system DTC is output (See page CA-15).

Result

Result	Proceed to
DTC is not output	A
DTC is output	B

B → REPAIR CAN COMMUNICATION SYSTEM

A

2	INSPECT MULTIPLEX COMMUNICATION SYSTEM

(a) Check if the multiplex communication system DTC is output (See page MP-23).

Result

Result	Proceed to
DTC is not output	A
DTC is output	B

B → REPAIR MULTIPLEX COMMUNICATION SYSTEM

A

3	INSPECT SLIP INDICATOR LIGHT

(a) Connect the intelligent tester to the DLC3.
(b) Start the engine.
(c) Select "ACTIVE TEST" on the intelligent tester.

ACTIVE TEST: ABS/VSC

Item	Vehicle Condition / Test Details	Diagnostic Note
SLIP INDI LIGHT	Turn SLIP indicator light ON/OFF	Observe combination meter

(d) Check that "ON" and "OFF" of the SLIP indicator light are indicated on the combination meter when using the intelligent tester.

OK:

The SLIP indicator light turns on or off in accordance with the intelligent tester.

HINT:

If troubleshooting has been carried out according to the PROBLEM SYMPTOMS TABLE, refer back to the table and proceed to the next step before replacing the part (See page BC-117).

NG → **Go to step 4**

OK ↓

REPLACE ABS & TRACTION ACTUATOR ASSEMBLY

4 INSPECT COMBINATION METER ASSEMBLY

(a) Check the combination meter assembly (See page ME-13).

HINT:

If troubleshooting has been carried out according to the PROBLEM SYMPTOMS TABLE, refer back to the table and proceed to the next step (See page BC-117).

NG → **REPLACE COMBINATION METER ASSEMBLY**

OK ↓

END

Skid Control Buzzer Circuit

DESCRIPTION

The skid control buzzer sounds and SLIP indicator light blinking during VSC operated.

WIRING DIAGRAM

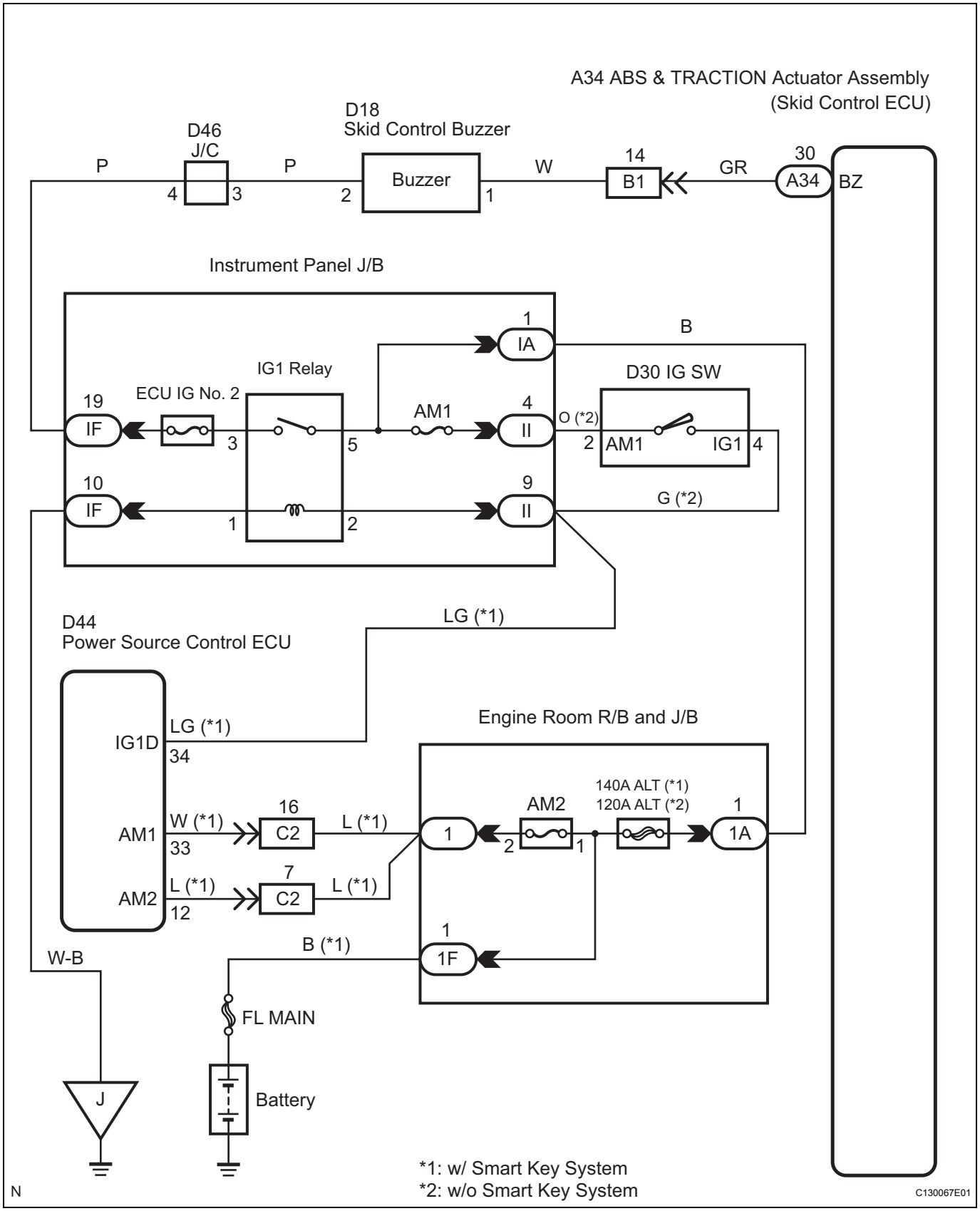

BC

INSPECTION PROCEDURE

NOTICE:

When replacing the ABS & TRACTION actuator assembly, perform zero point calibration (See page BC-104).

1 PERFORM ACTIVE TEST BY INTELLIGENT TESTER (SKID CONTROL BUZZER)

(a) Connect the intelligent tester to the DLC3.
(b) Turn the ignition switch on (IG) and turn the intelligent tester main switch on.
(c) Select "ACTIVE TEST" on the intelligent tester.

ACTIVE TEST: ABS/VSC

Item	Vehicle Condition / Test Details	Diagnostic Note
VSC/BR WARN BUZ	Turns skid control buzzer ON/OFF	Buzzer is heard

(d) Check that the buzzer sounds/stops when turning the skid control buzzer on/off by using the intelligent tester.

Result

Result	Proceed to
Buzzer sounds / stops	A
Buzzer does not sound or sounds constantly	B

HINT:
If troubleshooting has been carried out according to the PROBLEM SYMPTOMS TABLE, refer back to the table and proceed to the next step (See page BC-117).

B → Go to step 2

A

END

2 INSPECT SKID CONTROL BUZZER (POWER SOURCE TERMINAL VOLTAGE)

Skid Control Buzzer (harness side connector front view)

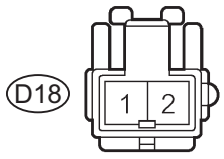

H I044040E02

(a) Disconnect the skid control buzzer connector.
(b) Turn the ignition switch on (IG).
(c) Measure the voltage according to the value(s) in the table below.

Voltage

Tester Connection	Condition	Specified Condition
D18-2 - Body ground	Ignition switch on (IG)	10 to 14 V

NG → REPAIR OR REPLACE HARNESS OR CONNECTOR (POWER SOURCE CIRCUIT)

OK

BC

3 INSPECT SKID CONTROL BUZZER

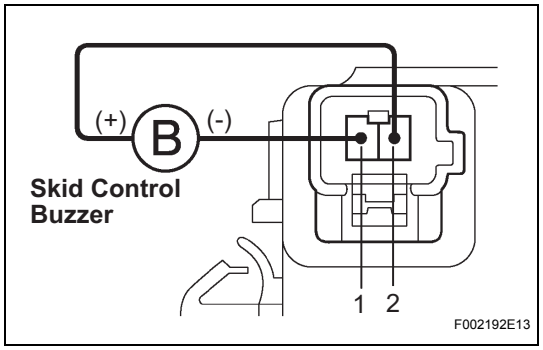

(a) Disconnect the skid control buzzer connector.
(b) Apply battery negative voltage to terminal 1, and battery positive voltage to terminal 2 of the skid control buzzer, and then check that the buzzer sounds.
OK:
Skid control buzzer sounds.

NG → **REPLACE SKID CONTROL BUZZER**

OK

4 CHECK HARNESS AND CONNECTOR (SKID CONTROL ECU TO SKID CONTROL BUZZER)

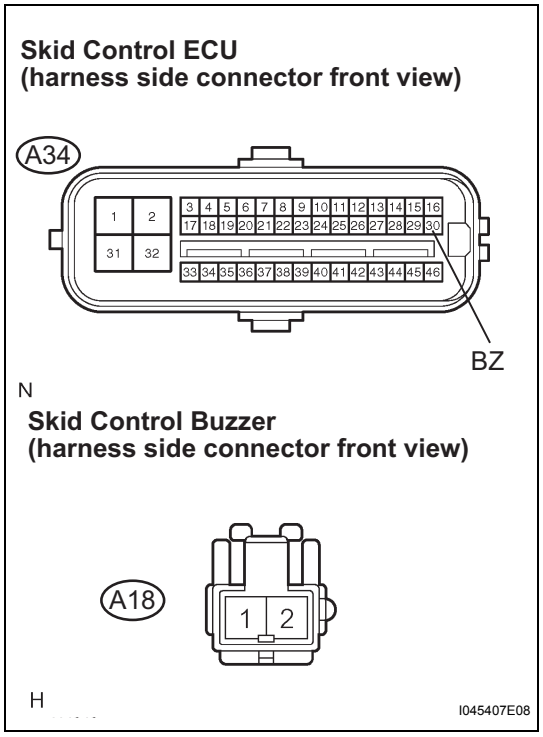

(a) Disconnect the skid control ECU connector.
(b) Measure the resistance according to the value(s) in the table below.
Resistance

Tester Connection	Specified Condition
A34-30 (BZ) - B18-1	Below 1 Ω
A34-30 (BZ) - Body ground	10 kΩ or higher

HINT:
If troubleshooting has been carried out according to the PROBLEM SYMPTOMS TABLE, refer back to the table and proceed to the next step before replacing the part (See page BC-117).

NG → **REPAIR OR REPLACE HARNESS OR CONNECTOR (BZ CIRCUIT)**

OK

REPLACE ABS & TRACTION ACTUATOR ASSEMBLY

BC

TC and CG Terminal Circuit

DESCRIPTION

Connecting terminals TC and CG of the DLC3 causes the ECU to display the DTC by blinking the ABS warning light.

WIRING DIAGRAM

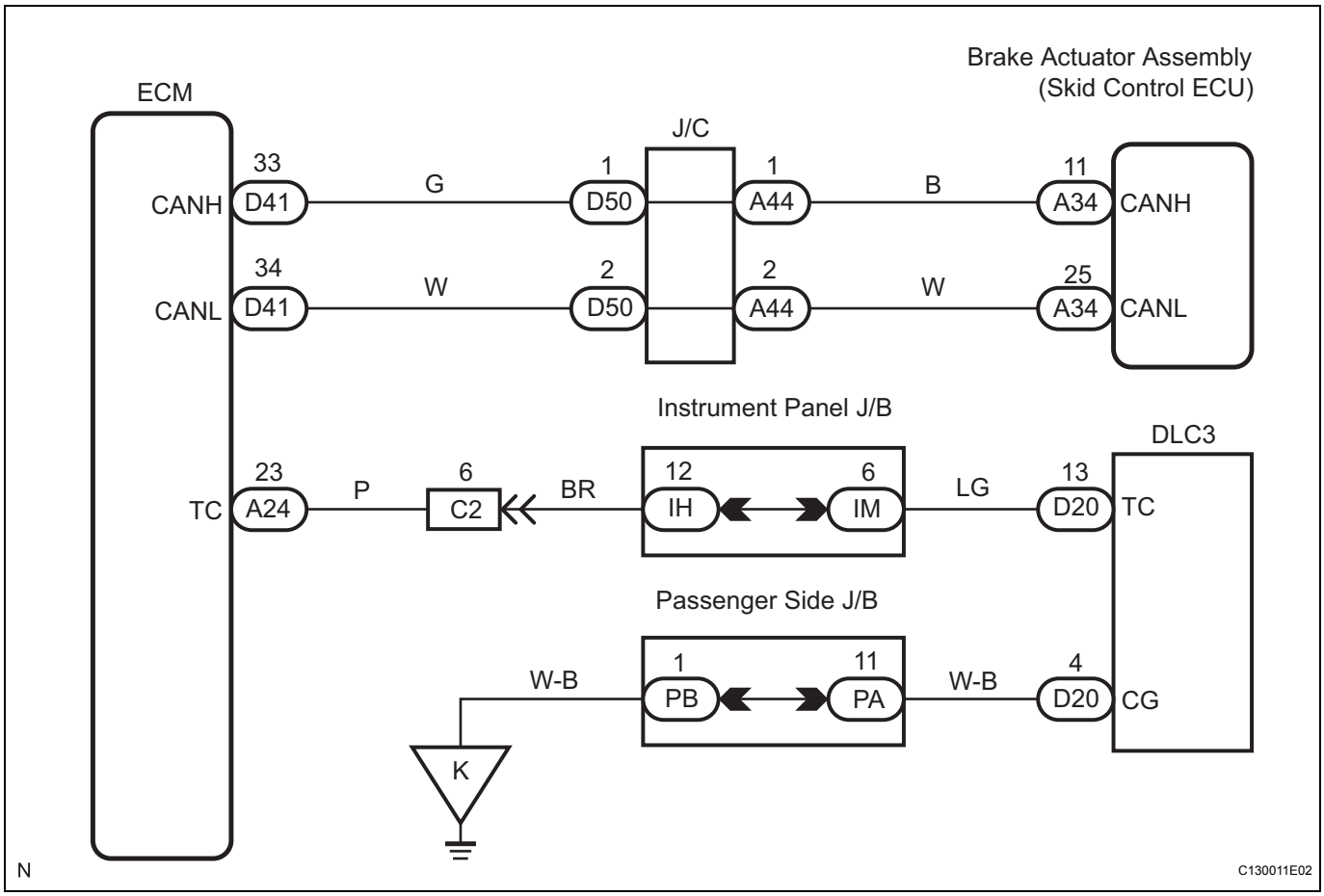

INSPECTION PROCEDURE

NOTICE:

When replacing the ABS & TRACTION actuator assembly, perform zero point calibration (See page BC-104).

BC

1 INSPECT DLC3 TERMINAL VOLTAGE (TC TERMINAL VOLTAGE)

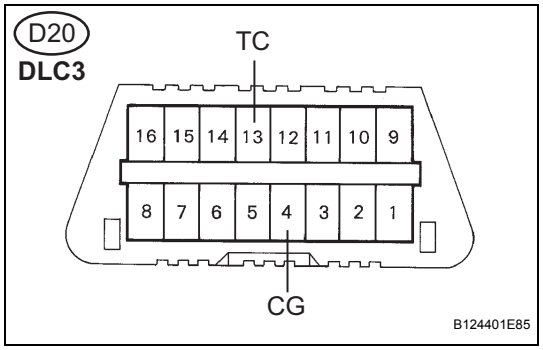

(a) Turn the ignition switch on (IG).
(b) Measure the voltage according to the value(s) in the table below.
Voltage

Tester Connection	Condition	Specified Condition
D20-13 (TC) - Body ground	Ignition switch on (IG)	10 to 14 V

(c) Measure the resistance according to the value(s) in the table below.
Resistance

Tester Connection	Specified Condition
D20-4 (CG) - Body ground	Below 1 Ω

NG → **Go to step 4**

OK

2 CHECK HARNESS AND CONNECTOR (ECM TO DLC3)

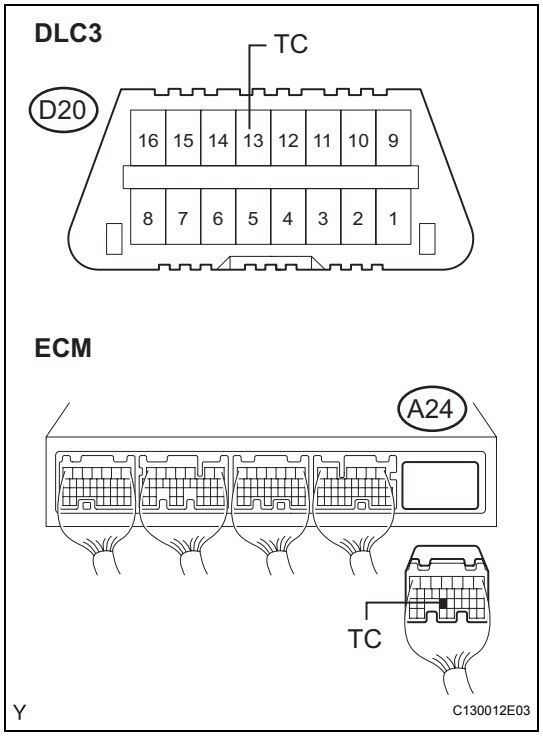

(a) Disconnect the ECM connector.
(b) Measure the resistance according to the value(s) in the table below.
Resistance

Tester Connection	Specified Condition
A24-23 (TC) - D20-13 (TC)	Below 1 Ω

(c) Measure the resistance according to the value(s) in the table below.
Resistance

Tester Connection	Specified Condition
D20-13 (TC) - Body ground	10 kΩ or higher

NG → **REPAIR OR REPLACE HARNESS OR CONNECTOR (TC TERMINAL CIRCUIT)**

OK

3 CHECK CAN COMMUNICATION SYSTEM

(a) Check if the CAN communication system DTC is output (See page CA-15).

BC

Result

Result	Proceed to
DTC is not output	A
DTC is output	B

HINT:
If troubleshooting has been carried out according to the PROBLEM SYMPTOMS TABLE, refer back to the table and proceed to the next step before replacing the part (See page BC-117).

B → **REPAIR CIRCUIT INDICATED BY OUTPUT CODE**

A

REPLACE ABS & TRACTION ACTUATOR ASSEMBLY

4 CHECK HARNESS AND CONNECTOR (ECM TO DLC3)

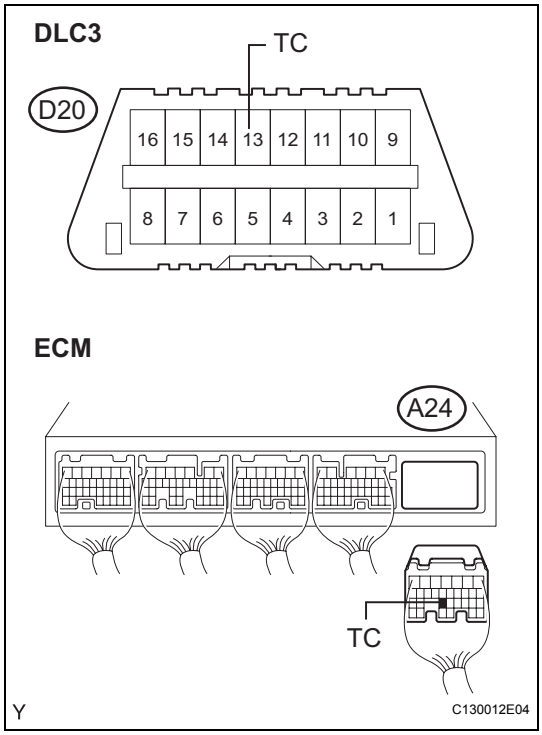

(a) Disconnect the ECM connector.
(b) Measure the resistance according to the value(s) in the table below.
Resistance

Tester Connection	Specified Condition
A24-23 (TC) - D20-13 (TC)	Below 1 Ω

(c) Measure the resistance according to the value(s) in the table below.
Resistance

Tester Connection	Specified Condition
D20-13 (TC) - Body ground	10 kΩ or higher

NG → **REPAIR OR REPLACE HARNESS OR CONNECTOR (TC CIRCUIT)**

OK

BC

5 CHECK HARNESS AND CONNECTOR (DLC3 TO BODY GROUND)

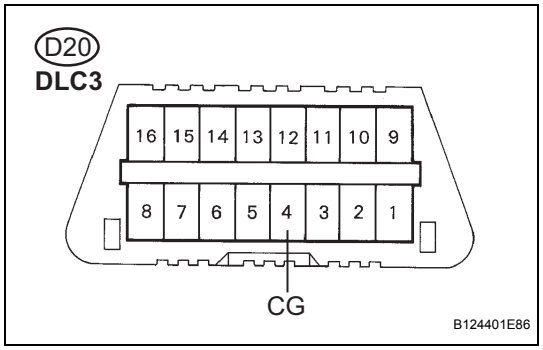

(a) Measure the resistance according to the value(s) in the table below.

Resistance

Tester Connection	Specified Condition
D20-4 (CG) - Body ground	Below 1 Ω

NG → **REPAIR OR REPLACE HARNESS OR CONNECTOR (GND CIRCUIT)**

OK

6 CHECK ECM (DLC3 (TC) INPUT)

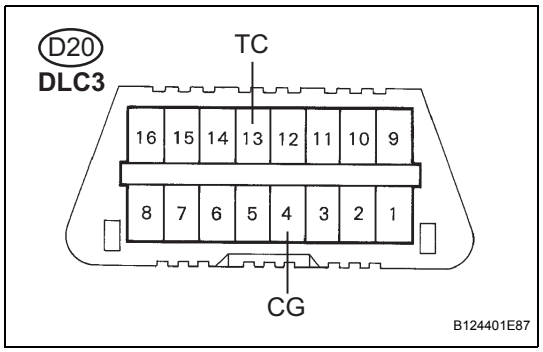

(a) Using SST, connect the terminals TC and CG of the DLC3.

SST 09843-18040

(b) Check that the engine warning light is blinking.

Result

Engine warning light is blinking	Engine warning light is not blinking
A	B

B → **REPLACE ECM**

A

7 CHECK CAN COMMUNICATION SYSTEM

(a) Check if the CAN communication system DTC is output (See page CA-15).

Result

Result	Proceed to
DTC is not output	A
DTC is output	B

HINT:
If troubleshooting has been carried out according to the PROBLEM SYMPTOMS TABLE, refer back to the table and proceed to the next step before replacing the part (See page CA-15).

B → **REPAIR CIRCUIT INDICATED BY OUTPUT CODE**

A

REPLACE ABS & TRACTION ACTUATOR ASSEMBLY

BC

TS and CG Terminal Circuit

DESCRIPTION

In the sensor check mode, a malfunction of the speed sensor that cannot be detected when the vehicle is stopped is detected while driving.
Transition to the sensor signal check mode can be performed by connecting terminals TS and CG of the DLC3 and turning the ignition switch from off to on (IG).

WIRING DIAGRAM

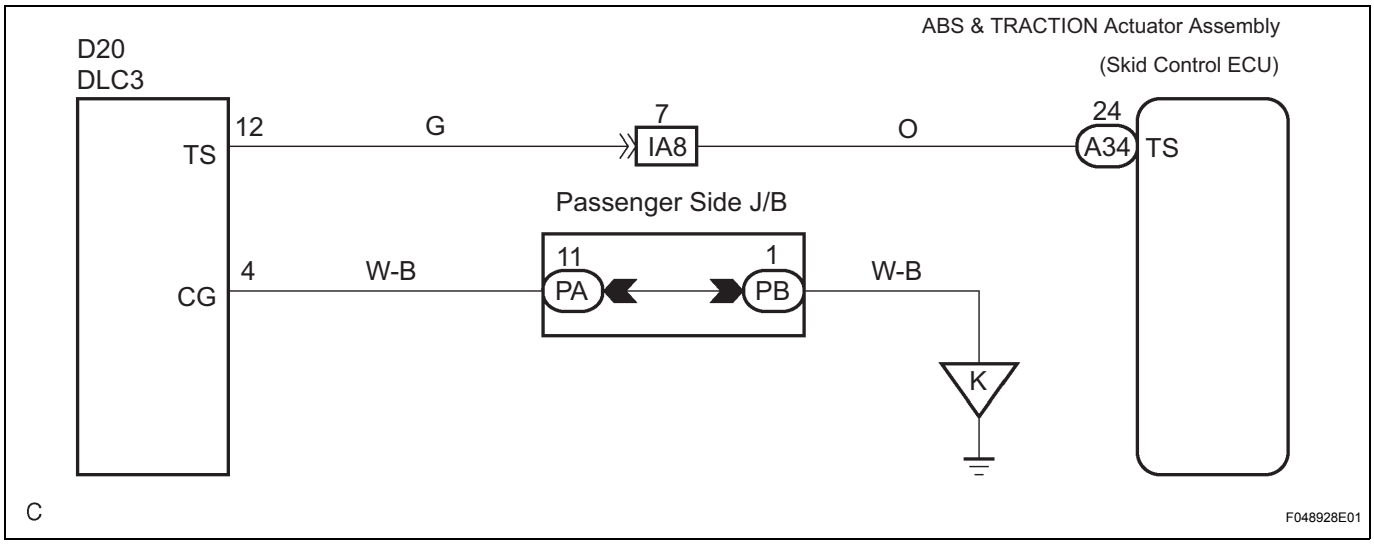

INSPECTION PROCEDURE

NOTICE:
When replacing the ABS & TRACTION actuator assembly, perform zero point calibration (See page BC-104).

1 CHECK HARNESS AND CONNECTOR (SKID CONTROL ECU TO DLC3 (TS))

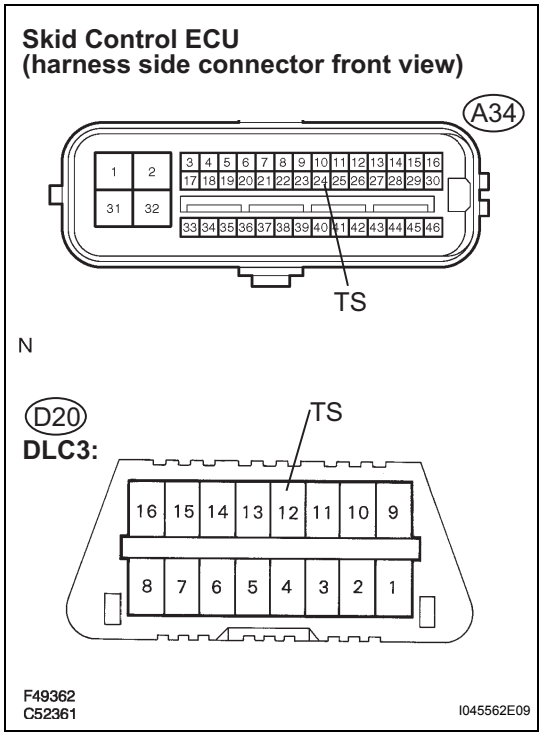

(a) Turn the ignition switch off.
(b) Disconnect the skid control ECU connector.
(c) Measure the resistance according to the value(s) in the table below.

Resistance

Tester Connection	Specified Condition
A34-24 (TS) - D20-12 (TS)	Below 1 Ω

(d) Measure the resistance according to the value(s) in the table below.

Resistance

Tester Connection	Specified Condition
D20-12 (TS) - Body ground	10 kΩ or higher

NG → **REPAIR OR REPLACE HARNESS OR CONNECTOR (TS CIRCUIT)**

OK

2 CHECK HARNESS AND CONNECTOR (DLC3 (CG) TO BODY GROUND)

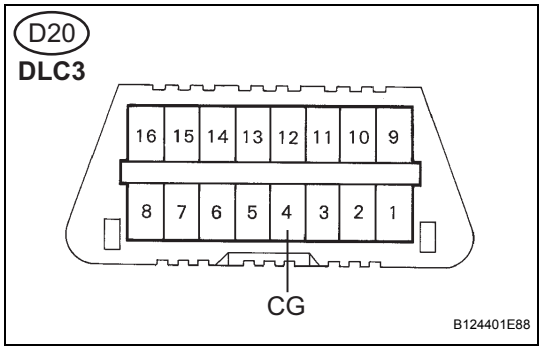

(a) Measure the resistance according to the value(s) in the table below.

Resistance

Tester Connection	Specified Condition
D20-4 (CG) - Body ground	Below 1 Ω

HINT:
If troubleshooting has been carried out according to the PROBLEM SYMPTOMS TABLE, refer back to the table and proceed to the next step before replacing the part (See page BC-233).

NG → **REPAIR OR REPLACE HARNESS OR CONNECTOR (CG CIRCUIT)**

OK

REPLACE ABS & TRACTION ACTUATOR ASSEMBLY

BC

BRAKE ACTUATOR (w/ VSC)

COMPONENTS

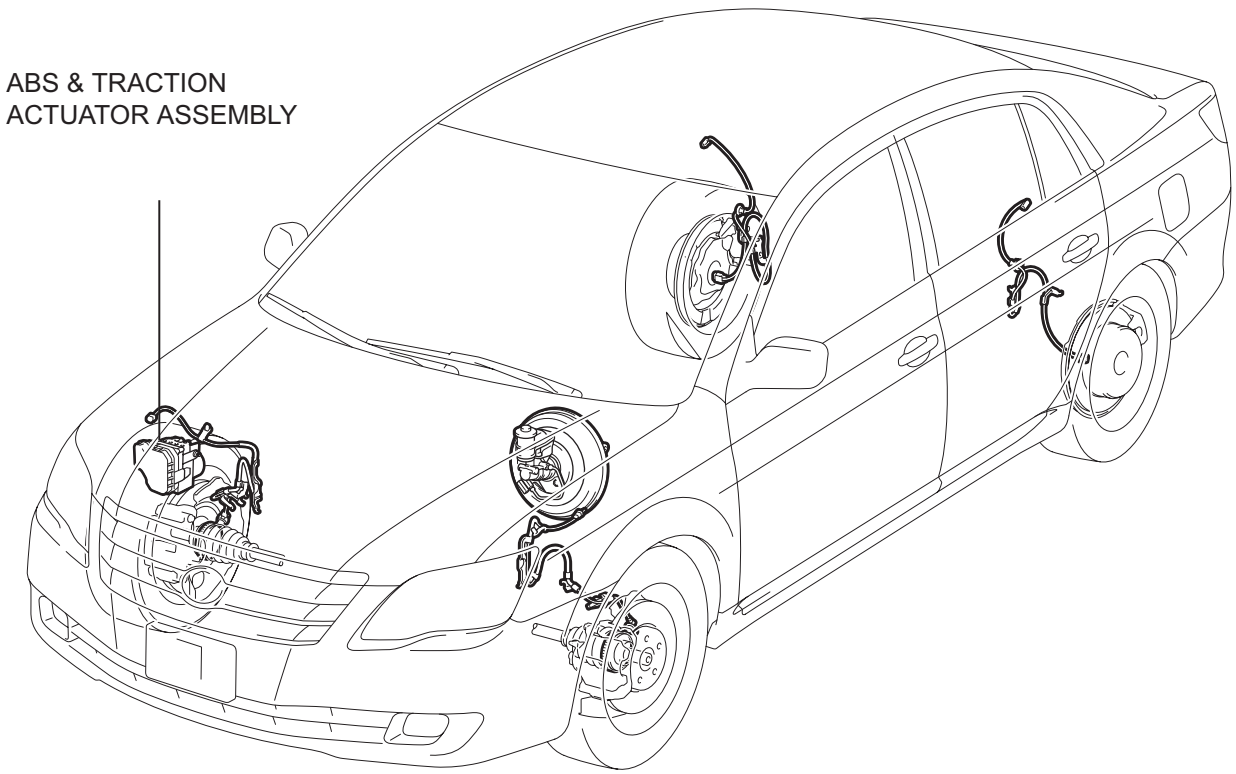

P

C114950E02

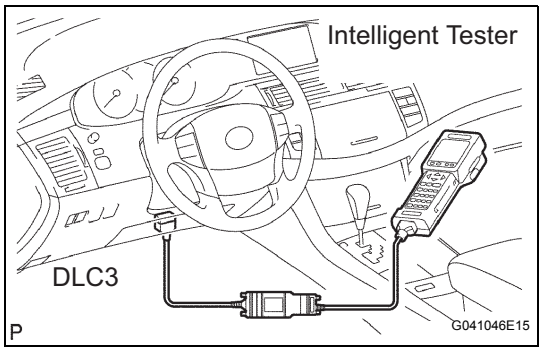

ON-VEHICLE INSPECTION

1. CONNECT INTELLIGENT TESTER

(a) Connect the intelligent tester to the DLC3.
(b) Start the engine and run at idle.
(c) Select the ACTIVE TEST mode on the intelligent tester.
HINT:
Refer to the intelligent tester operator's manual for further details.

2. INSPECT ACTUATOR MOTOR OPERATION

(a) With the motor relay on, check the actuator motor operation noise.
(b) Turn the motor relay off.
(c) Depress the brake pedal and hold it for approximately 15 seconds. Check that the brake pedal cannot be depressed further.
(d) With the motor relay on, check that the pedal does not pulsate.
NOTICE:
Do not keep the motor relay turned on for more than 5 seconds continuously. When operating it continuously, set an interval of more than 20 seconds.
(e) Turn the motor relay off and release the brake pedal.

3. INSPECT RIGHT FRONT WHEEL OPERATION

NOTICE:
Never turn on the solenoids in a manner different from those described below.

(a) With the brake pedal depressed, perform the following operations.
(b) Turn the SFRH and SFRR solenoids on simultaneously, and check that the pedal cannot be depressed.
NOTICE:
Do not keep the solenoids turned on for more than 10 seconds continuously. When operating them continuously, set an interval of more than 20 seconds.
(c) Turn the SFRH and SFRR solenoids off simultaneously, and check that the pedal can be depressed.
(d) Turn the motor relay on, and check that the pedal returns.
NOTICE:
Do not keep the motor relay turned on for more than 5 seconds continuously. When operating it continuously, set an interval of more than 20 seconds.
(e) Turn the motor relay off and release the brake pedal.

4. INSPECT OTHER WHEEL OPERATION

(a) Using the same procedure, check the solenoids of the other wheels.
HINT:
Left front wheel: SFLH, SFLR
Right rear wheel: SRRH, SRRR
Left rear wheel: SRLH, SRLR

REMOVAL

1. **DRAIN BRAKE FLUID**
   NOTICE:
   Wash brake fluid off immediately if it adheres to any painted surface.

2. **DISCONNECT CABLE FROM NEGATIVE BATTERY TERMINAL (See page RS-303)**

3. **REMOVE BRAKE ACTUATOR WITH BRACKET**
   (a) Using SST, disconnect the 6 brake tubes from the actuator with bracket.
   SST 09023-00101

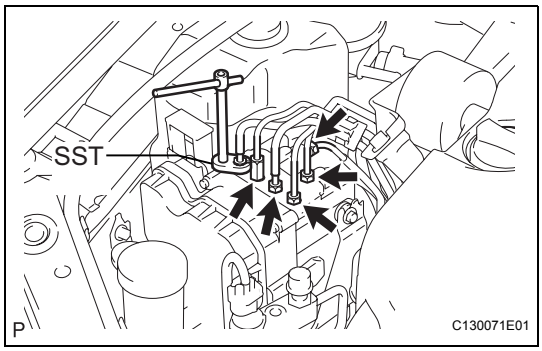

(b) Use tags or make a memo to identify the reconnection points.

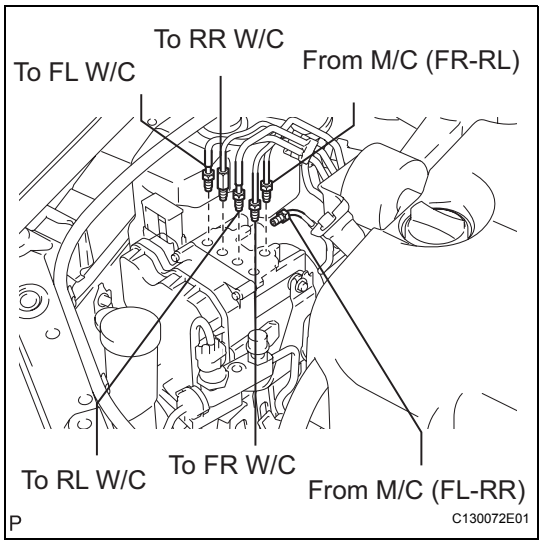

(c) Pull the lock lever upward.
(d) Disconnect the actuator connector.

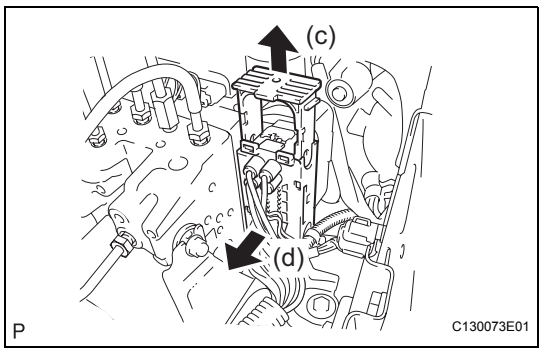

BC

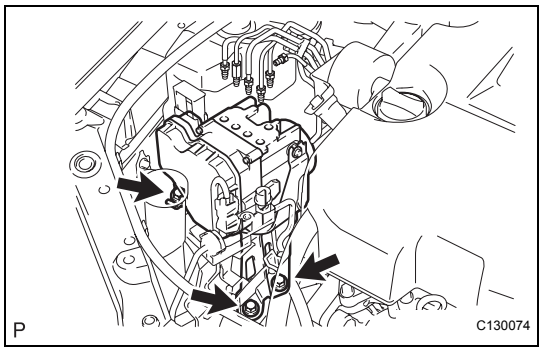

(e) Remove the 3 bolts and the actuator with bracket.
NOTICE:
Do not damage the brake tubes and wire harness.

DISASSEMBLY

1. REMOVE ABS & TRACTION ACTUATOR ASSEMBLY

(a) Remove the 2 nuts and the brake actuator assembly from the brake actuator bracket.

REASSEMBLY

1. **INSTALL ABS & TRACTION ACTUATOR ASSEMBLY**
   (a) Install the brake actuator assembly with the 2 nuts.
   Torque: 5.4 N*m (55 kgf*cm, 48 in.*lbf)

INSTALLATION

1. **INSTALL BRAKE ACTUATOR WITH BRACKET**
   (a) Install the actuator with bracket with the 3 bolts.
   Torque: 19 N*m (194 kgf*cm, 14 ft.*lbf)
   NOTICE:
   Do not damage the brake tubes and wire harness.

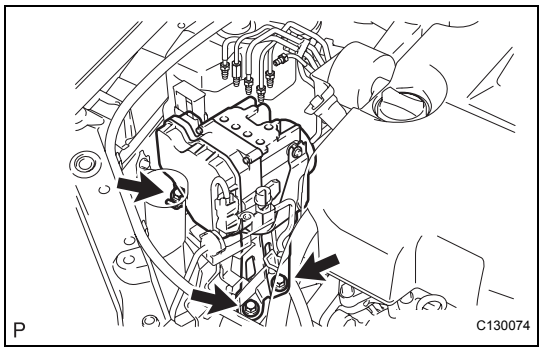

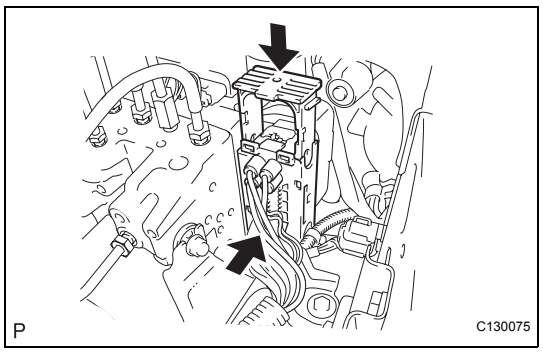

   (b) Connect the actuator connector.

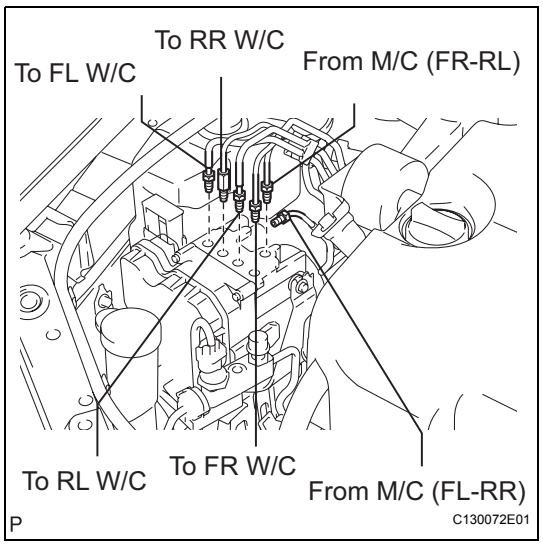

   (c) Using SST, connect each brake tube to correct positions of the actuator with bracket as shown in the illustration.
   SST 09023-00101
   Torque: 15 N*m (155 kgf*cm, 11 ft.*lbf)

2. **FILL RESERVOIR WITH BRAKE FLUID (See page BR-3)**
3. **BLEED MASTER CYLINDER (See page BR-3)**
4. **BLEED BRAKE LINE (See page BR-3)**
5. **CHECK BRAKE FLUID LEAKAGE**
6. **CHECK FLUID LEVEL IN RESERVOIR (See page BR-6)**
7. **CONNECT CABLE FROM NEGATIVE BATTERY TERMINAL**
8. **PERFORM INITIALIZATION**
   (a) Some systems need initialization after reconnecting the negative battery cable.
9. **PERFORM YAW RATE SENSOR ZERO POINT CALIBRATION**
   (a) Perform the yaw rate sensor zero point calibration (See page BC-104).
10. **CHECK BRAKE ACTUATOR WITH INTELLIGENT TESTER**
    (a) Check the brake actuator (See page BC-240).

BC

BRAKE ACTUATOR (w/o VSC)

COMPONENTS

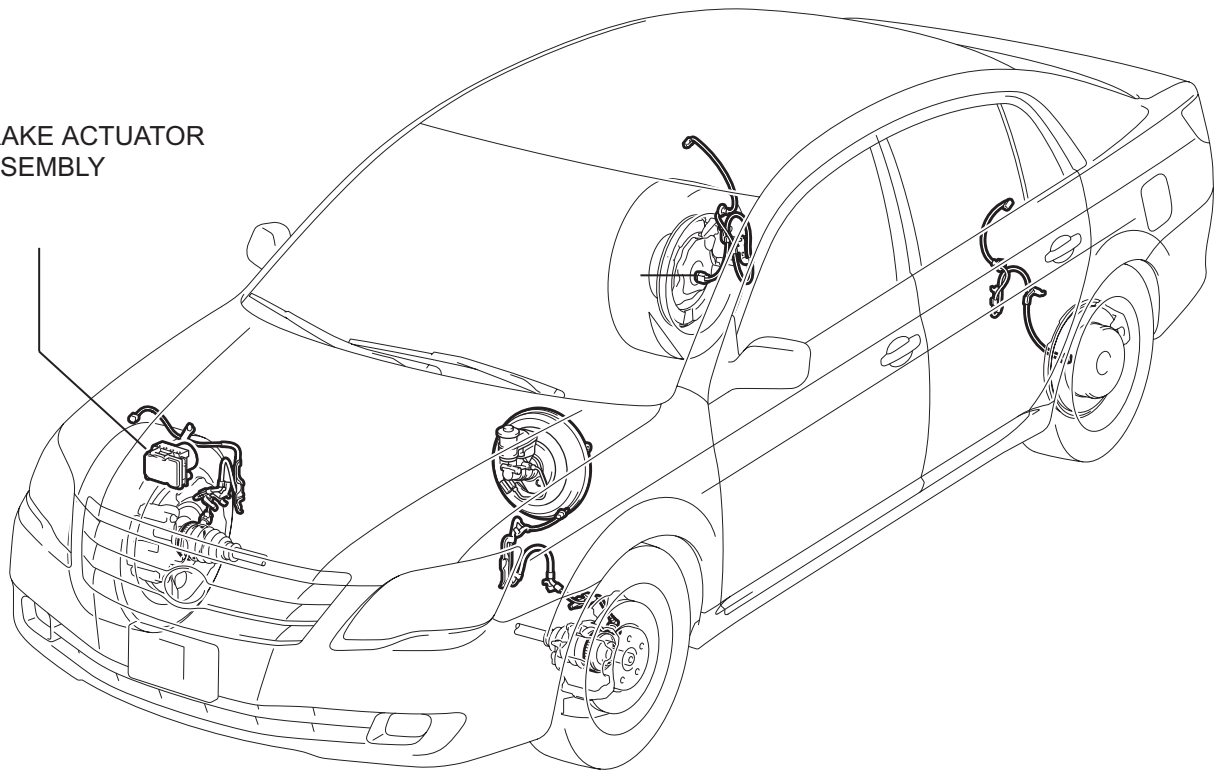

P

C114949E03

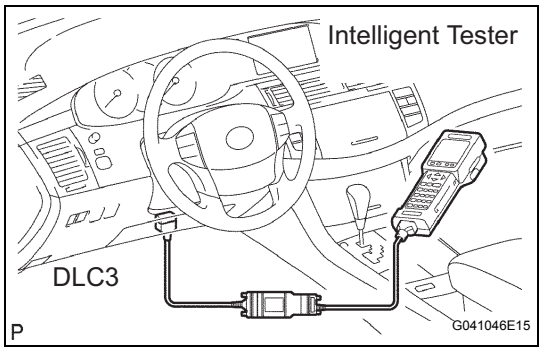

ON-VEHICLE INSPECTION

1. CONNECT INTELLIGENT TESTER

(a) Connect the intelligent tester to the DLC3.
(b) Start the engine and run at idle.
(c) Select the ACTIVE TEST mode on the intelligent tester.
HINT:
Refer to the intelligent tester operator's manual for further details.

2. INSPECT ACTUATOR MOTOR OPERATION

(a) With the motor relay on, check the actuator motor operation noise.
(b) Turn the motor relay off.
(c) Depress the brake pedal and hold it for approximately 15 seconds. Check that the brake pedal cannot be depressed further.
(d) With the motor relay on, check that the pedal does not pulsate.
NOTICE:
Do not keep the motor relay turned on for more than 5 seconds continuously. When operating it continuously, set an interval of more than 20 seconds.
(e) Turn the motor relay off and release the brake pedal.

3. INSPECT RIGHT FRONT WHEEL OPERATION

NOTICE:
Never turn on the solenoids in a manner different from those described below.

(a) With the brake pedal depressed, perform the following operations.
(b) Turn the SFRH and SFRR solenoids on simultaneously, and check that the pedal cannot be depressed.
NOTICE:
Do not keep the solenoids turned on for more than 5 seconds continuously. When operating them continuously, set an interval of more than 20 seconds.
(c) Turn the SFRH and SFRR solenoids off simultaneously, and check that the pedal can be depressed.
(d) Turn the motor relay on, and check that the pedal returns.
NOTICE:
Do not keep the motor relay turned on for more than 5 seconds continuously. When operating it continuously, set an interval of more than 20 seconds.
(e) Turn the motor relay off and release the brake pedal.

4. INSPECT OTHER WHEEL OPERATION

(a) Using the same procedure, check the solenoids of the other wheels.
HINT:
Left front wheel: SFLH, SFLR
Right rear wheel: SRRH, SRRR
Left rear wheel: SRLH, SRLR

REMOVAL

1. **DRAIN BRAKE FLUID**
   NOTICE:
   Wash brake fluid off immediately if it adheres to any painted surface.

2. **DISCONNECT CABLE FROM NEGATIVE BATTERY TERMINAL (See page RS-303)**

3. **REMOVE BRAKE ACTUATOR WITH BRACKET**
   (a) Release the latch of the brake actuator connector to disconnect the connector.
   (b) Using SST, disconnect the 6 brake tubes from the brake actuator.
   SST 09023-00101

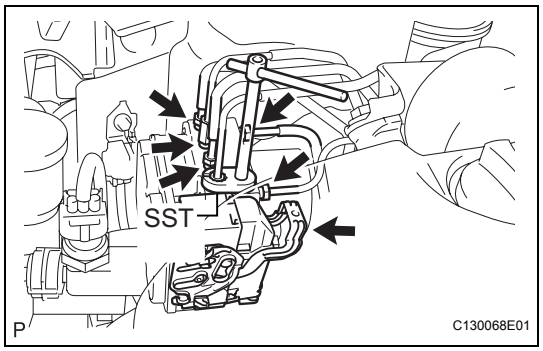

   (c) Use tags or make a memo to identify the reconnection points.

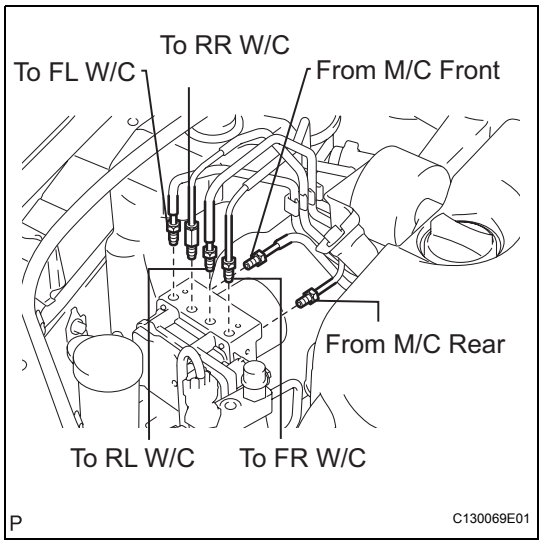

   (d) Remove the 3 bolts and brake actuator with bracket.
   NOTICE:
   Do not damage the brake tubes and wire harness.

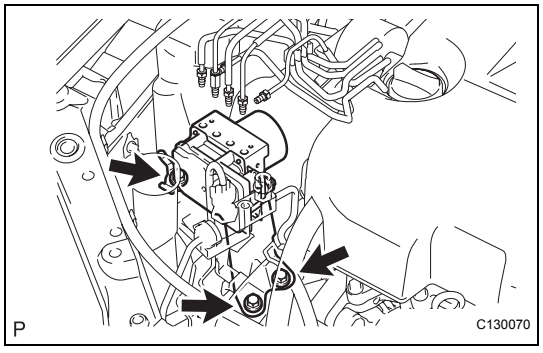

BC

DISASSEMBLY

1. REMOVE BRAKE ACTUATOR ASSEMBLY

(a) Remove the 2 nuts and brake actuator from the brake actuator bracket.

REASSEMBLY

1. **INSTALL BRAKE ACTUATOR ASSEMBLY**
   (a) Install the brake actuator to the brake actuator bracket with the 2 nuts.
   Torque: 8.0 N*m (82 kgf*cm, 71 in.*lbf)

INSTALLATION

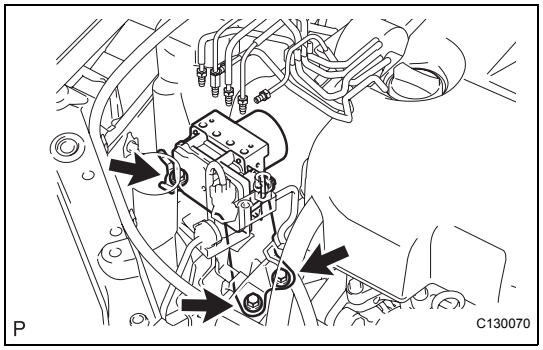

1. **INSTALL BRAKE ACTUATOR WITH BRACKET**
   (a) Install the brake actuator with bracket with the 3 bolts.
   Torque: 19 N*m (194 kgf*cm, 14 ft.*lbf)
   NOTICE:
   Do not damage the brake tubes and wire harness.

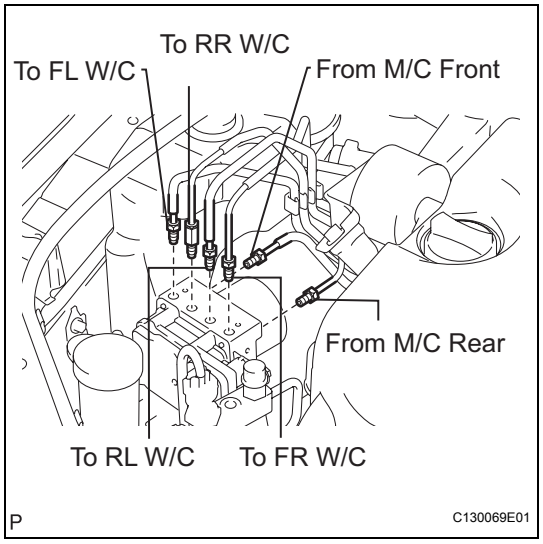

   (b) Using SST, connect each brake line to the correct position of the brake actuator as shown in the illustration.
   Torque: 15 N*m (155 kgf*cm, 11 ft.*lbf)
   (c) Connect the brake actuator connector.

2. **FILL RESERVOIR WITH BRAKE FLUID (See page BR-3)**
3. **BLEED MASTER CYLINDER (See page BR-3)**
4. **BLEED BRAKE LINE (See page BR-3)**
5. **CHECK BRAKE FLUID LEAKAGE**
6. **CHECK FLUID LEVEL IN RESERVOIR (See page BR-6)**
7. **CONNECT CABLE TO NEGATIVE BATTERY TERMINAL**
8. **PERFORM INITIALIZATION**
   (a) Some systems need initialization after reconnecting the negative battery cable.
9. **CHECK BRAKE ACTUATOR WITH INTELLIGENT TESTER**
   (a) Check the brake actuator (See page BC-245).

FRONT SPEED SENSOR

COMPONENTS

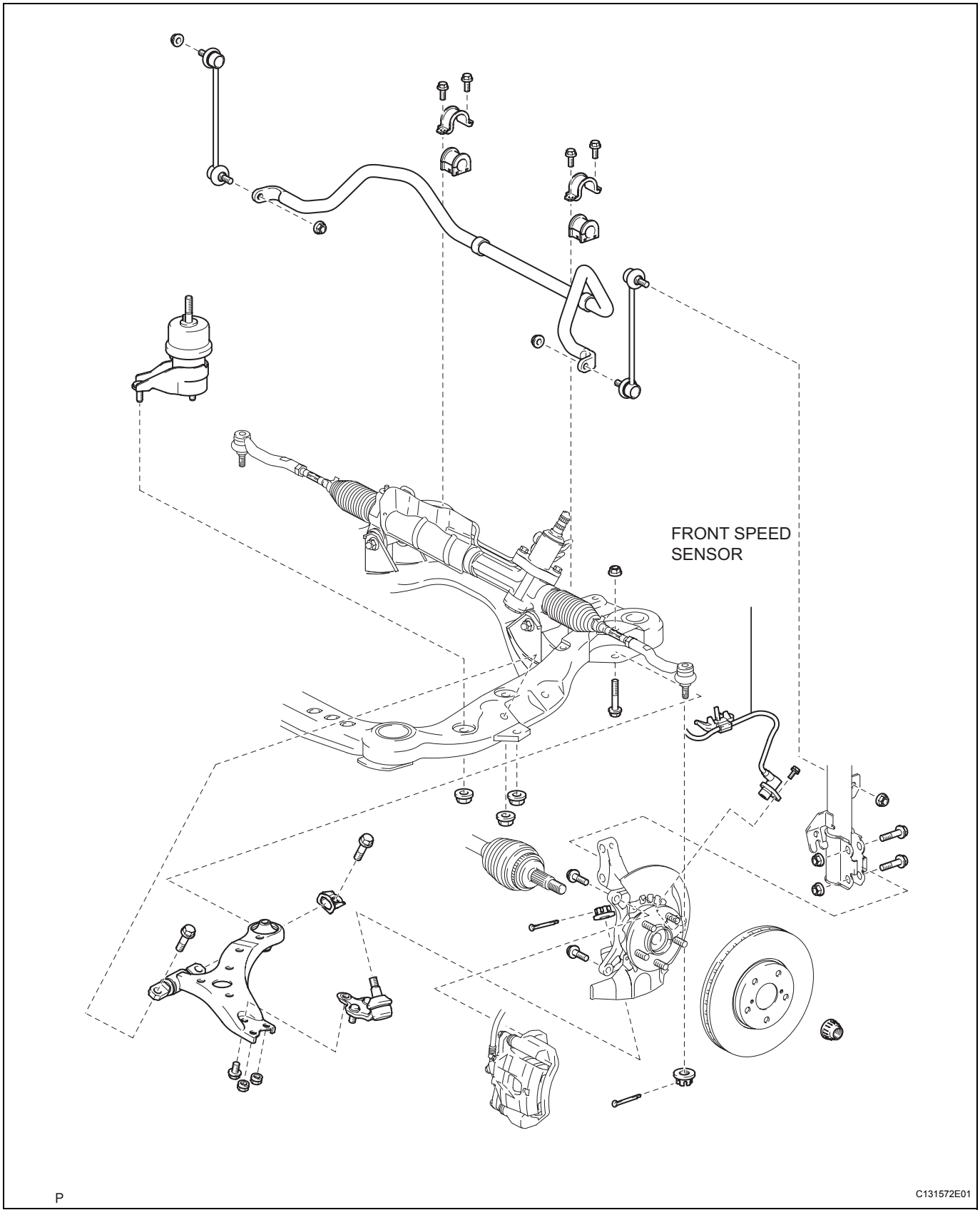

REMOVAL

1. **REMOVE FRONT WHEEL**
2. **REMOVE FRONT FENDER LINER LH**
3. **REMOVE FRONT SPEED SENSOR**
   (a) Disconnect the speed sensor connector and clamp.

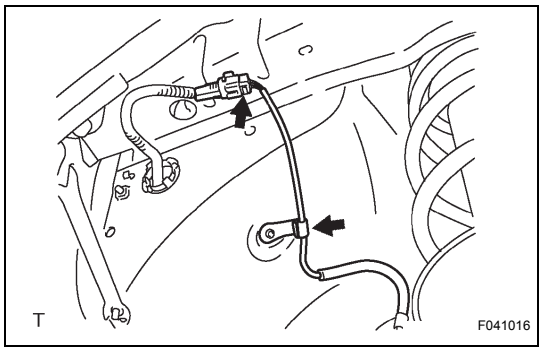

(b) Remove the 2 bolts and separate the speed sensor harness from the body and shock absorber assembly.
(c) Remove the clamp from the steering knuckle.

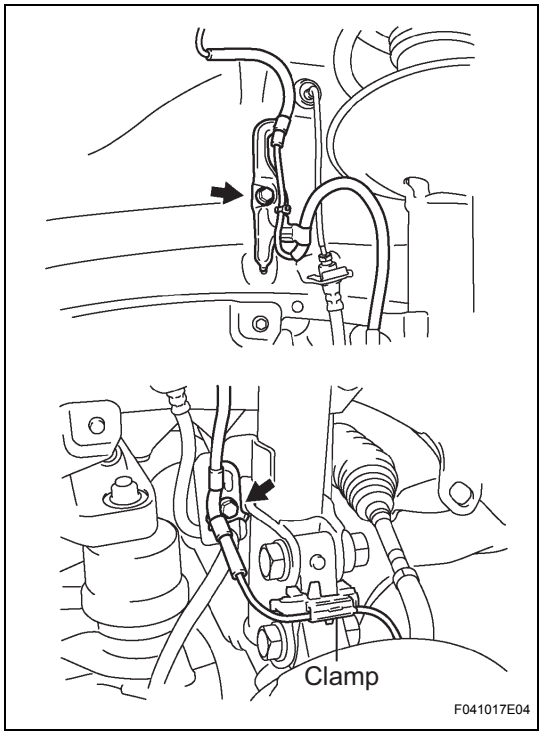

(d) Remove the bolt and the front speed sensor.
NOTICE:
- **Prevent foreign matter from attaching to the sensor tip.**
- **Clean the installation hole and surface for the speed sensor every time the speed sensor is removed.**

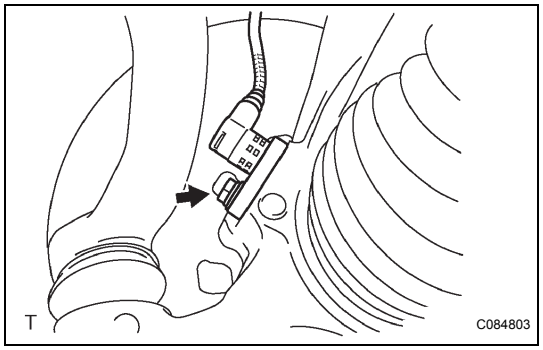

BC

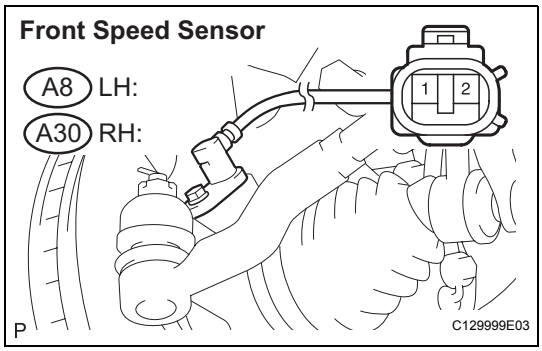

INSPECTION

1. INSPECT FRONT SPEED SENSOR

(a) Make sure that there is no looseness at the locking part and the connecting part of the connectors.

(b) Disconnect the front speed sensor connectors.

(c) Measure the resistance according to the value(s) in the table below.

Resistance:

LH

Tester Connection	Specified Condition
A8-1 (FL+) - A8-2 (FL-)	1.22 to 0.92 kΩ
A8-1 (FL+) - Body ground	10 kΩ or higher
A8-2 (FL-) - Body ground	10 kΩ or higher

RH

Tester Connection	Specified Condition
A30-1 (FR+) - A30-2 (FR-)	1.22 to 0.92 kΩ
A30-1 (FR+) - Body ground	10 kΩ or higher
A30-2 (FR-) - Body ground	10 kΩ or higher

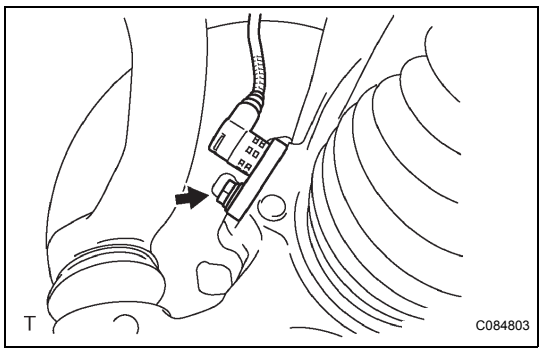

INSTALLATION

1. INSTALL FRONT SPEED SENSOR

(a) Install the speed sensor front LH with the bolt.

Torque: 8.0 N*m (82 kgf*cm, 71 in.*lbf)

NOTICE:

Prevent foreign matter from attaching to the sensor tip.

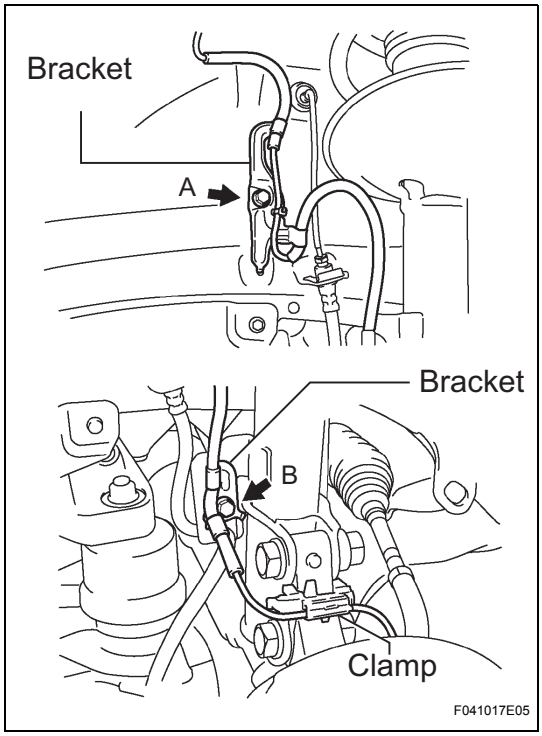

(b) Install the sensor harness brackets with the 2 bolts to the body and shock absorber assembly.

Torque: Bolt A

5.0 N*m (51 kgf*cm, 44 in.*lbf)

Bolt B

19 N*m (192 kgf*cm, 14 ft.*lbf)

(c) Connect the clamp to the steering knuckle.

NOTICE:

Do not twist the wire harness for speed sensor front LH when installing the speed sensor.

BC

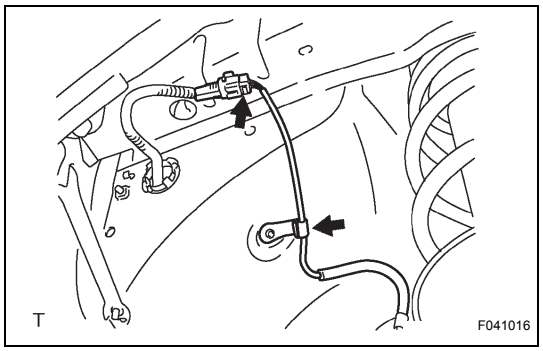

(d) Connect the speed sensor connector and clamp.

2. **INSTALL FRONT FENDER LINER LH**

3. **INSTALL FRONT WHEEL**
Torque: 103 N*m (1,050 kgf*cm, 76 ft.*lbf)

4. **CHECK ABS SPEED SENSOR SIGNAL**
(a) Check the ABS speed sensor signal (See page BC-11 without VSC, or BC-107 with VSC).

REAR SPEED SENSOR

COMPONENTS

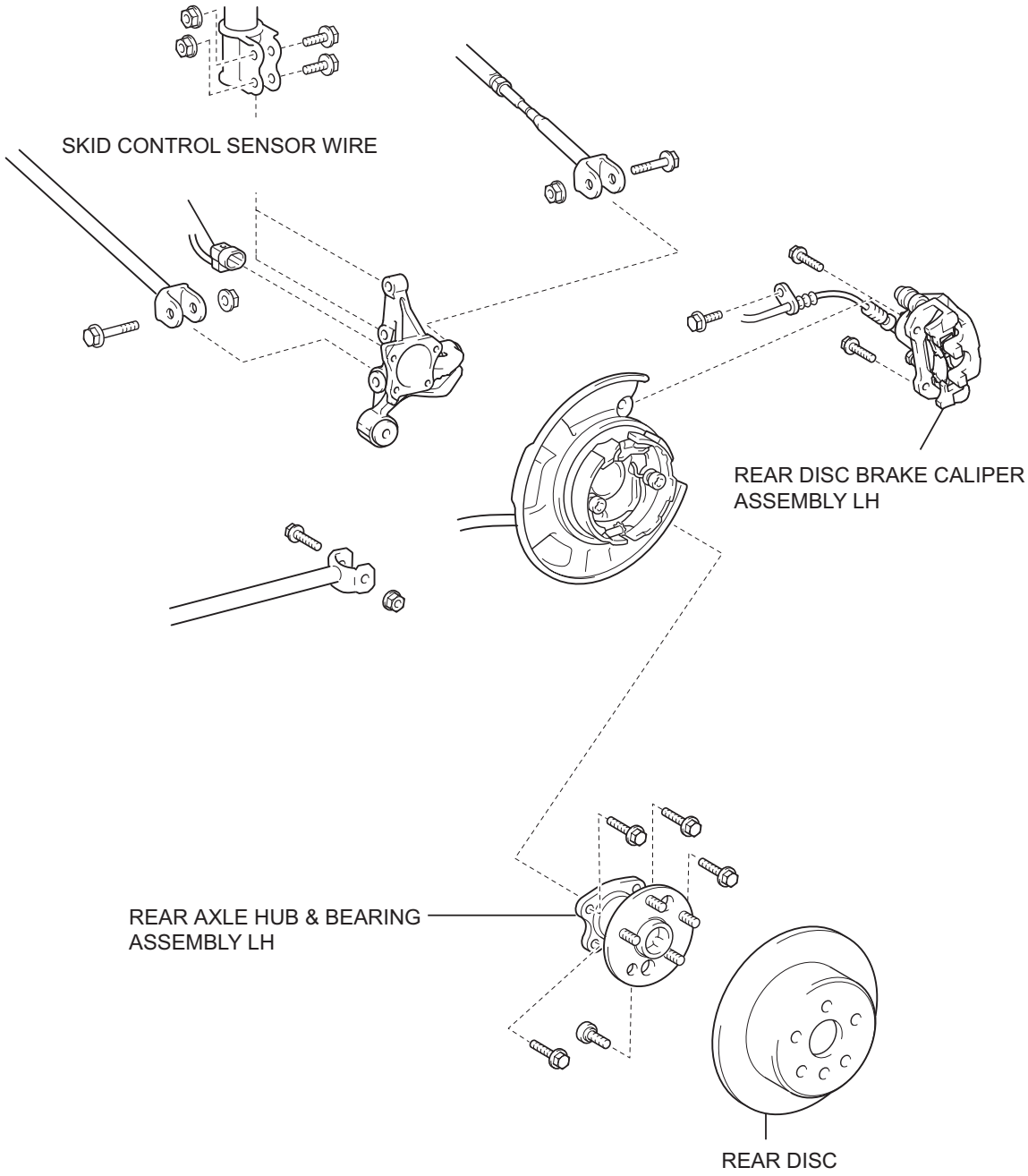

REMOVAL

1. **REMOVE REAR WHEEL**

2. **DISCONNECT SKID CONTROL SENSOR WIRE**
   (a) Disconnect the connector from the skid control sensor.

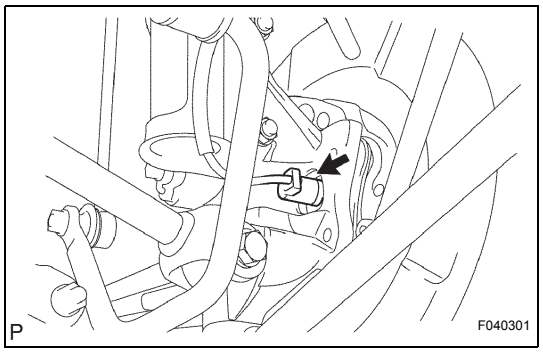

3. **REMOVE REAR DISC BRAKE CALIPER ASSEMBLY LH (See page AH-19)**

4. **REMOVE REAR DISC**

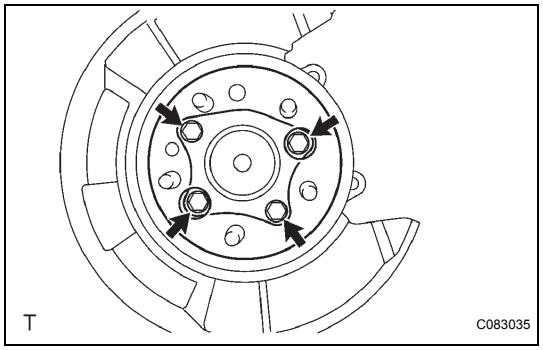

5. **REMOVE REAR AXLE HUB & BEARING ASSEMBLY LH**
   (a) Remove the 4 bolts and rear axle hub & bearing assembly.

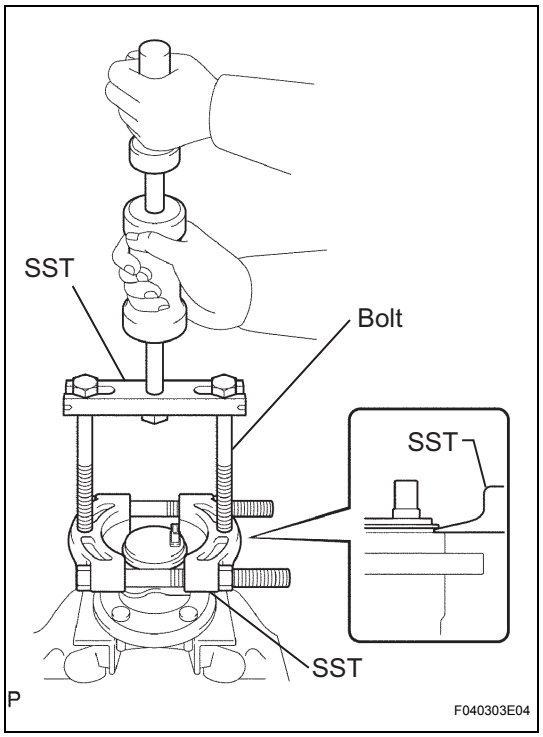

6. **REMOVE REAR SPEED SENSOR**
   (a) Mount the rear axle hub in a vise between aluminum plates.
   NOTICE:
   Replace the axle hub & bearing assembly if it is dropped or receives a strong shock.
   (b) Using a pin punch and hammer, drive out the 2 pins and remove the 2 attachments (09521-00010) from SST.
   SST 09520-00031
   (c) Using SST and 2 bolts (Diameter: 12 mm, pitch: 1.5 mm), remove the rear speed sensor from the rear axle hub.
   SST 09520-00031 (09520-00040), 09521-00020, 09950-00020
   NOTICE:
   - **If damage is inflicted on the sensor rotor, replace the axle hub & bearing assembly.**
   - **Do not scratch the contact surface of axle hub and speed sensor.**

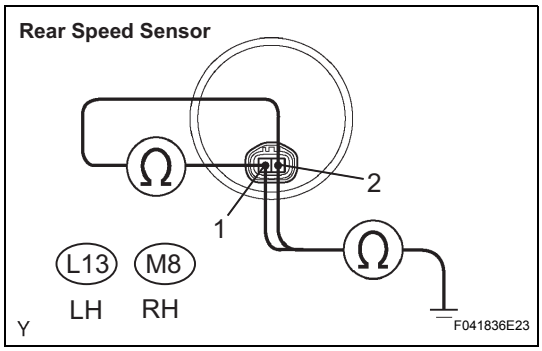

INSPECTION

1. INSPECT REAR SPEED SENSOR

(a) Disconnect the rear speed sensor connector.

(b) Measure the resistance according to the value(s) in the table below.

Resistance:

LH

Tester Connection	Specified Condition
K13-1 (RL+) - K13-2 (RL-)	Below 2.2 kΩ
K13-1 (RL+) - Body ground	10 kΩ or higher
K13-2 (RL-) - Body ground	10 kΩ or higher

RH

Tester Connection	Specified Condition
M8-1 (RR+) - M8-2 (RR-)	Below 2.2 kΩ
M8-1 (RR+) - Body ground	10 kΩ or higher
M8-2 (RR-) - Body ground	10 kΩ or higher

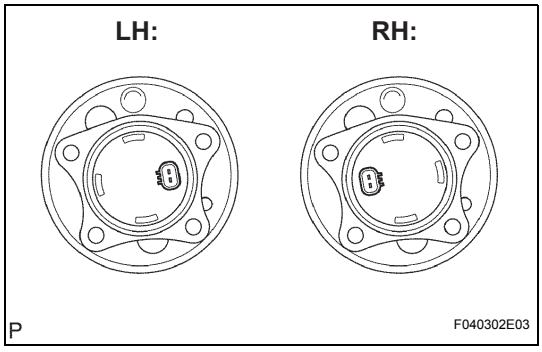

INSTALLATION

1. INSTALL REAR SPEED SENSOR

(a) Clean the contact surface of the axle hub and a new skid control sensor.

NOTICE:

Prevent foreign matter from attaching to the sensor rotor.

(b) Place the skid control sensor on the axle hub so that the connector is positioned as shown in the illustration.

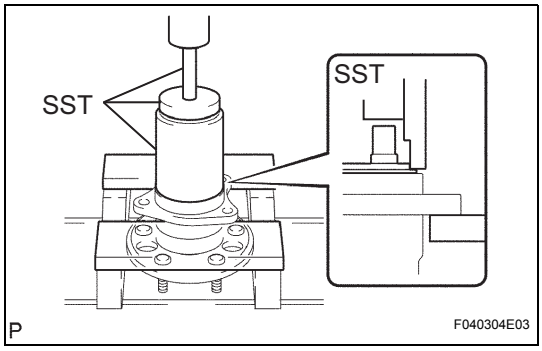

(c) Using SST and a press, install the skid control sensor to the axle hub.

SST 09830-36010, 09950-60010 (09951-00650), 09950-70010 (09951-07100)

NOTICE:

- **Do not tap the skid control sensor with a hammer directly.**
- **Check that there should be no foreign matter on the skid control sensor detection portion.**
- **Press the skid control sensor in the axle hub straight and slowly.**

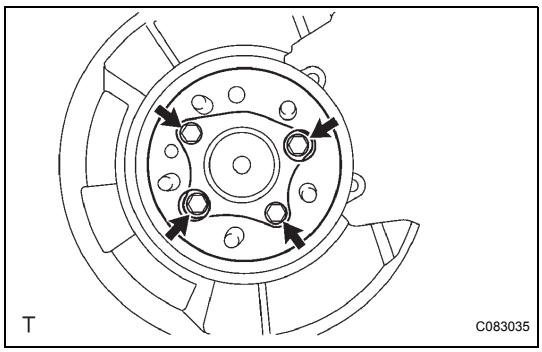

2. INSTALL REAR AXLE HUB & BEARING ASSEMBLY LH

(a) Install the rear axle hub & bearing assembly with the 4 bolts.

Torque: 80 N*m (816 kgf*cm, 59 ft.*lbf)

3. INSTALL REAR DISC

4. INSTALL REAR DISC BRAKE CALIPER ASSEMBLY LH (See page AH-21)

BC

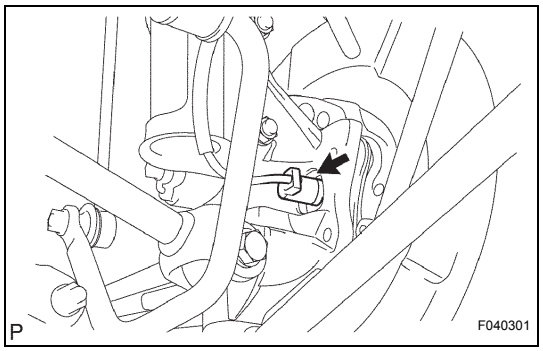

5. **CONNECT SKID CONTROL SENSOR WIRE**
   (a) Connect the connector to the skid control sensor.
6. **INSTALL REAR WHEEL**
   Torque: 103 N*m (1,050 kgf*cm, 76 ft.*lbf)
7. **INSPECT REAR WHEEL ALIGNMENT**
8. **CHECK ABS SPEED SENSOR SIGNAL**
   (a) Check the ABS speed sensor signal (See page BC-11 without VSC, or BC-107 with VSC).

YAW RATE AND ACCELERATION SENSOR

COMPONENTS

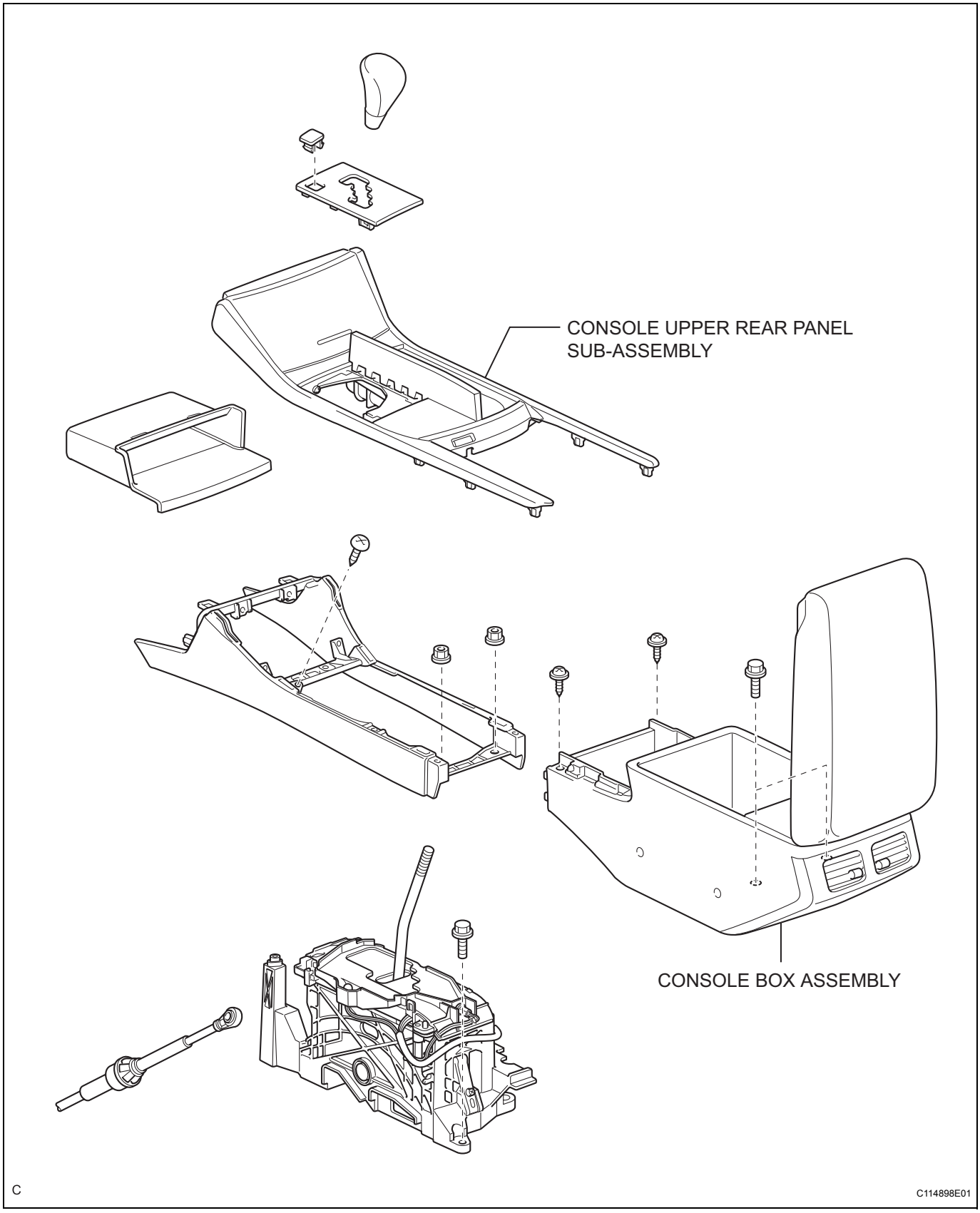

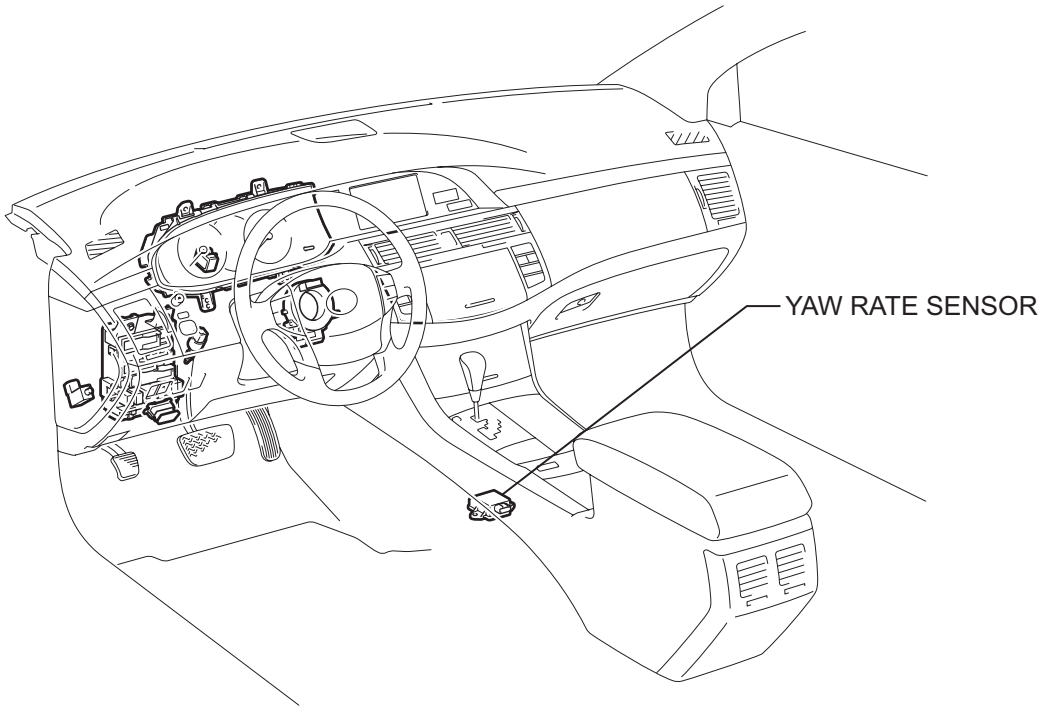

P

C114882E04

REMOVAL

NOTICE:

- **Do not use dropped or damaged yaw rate sensors.**
- **Prevent foreign matter from attaching between the yaw rate sensor bracket and body.**
- **Confirm that the sensor direction is correct.**

1. **DISCONNECT CABLE FROM NEGATIVE BATTERY TERMINAL**
2. **REMOVE CONSOLE UPPER REAR PANEL SUB-ASSEMBLY (See page IP-13)**
3. **REMOVE CONSOLE BOX ASSEMBLY (See page IP-13)**
4. **REMOVE YAW RATE SENSOR**
   (a) Disconnect the yaw rate sensor connector.
   (b) Remove the 2 bolts and yaw rate sensor.

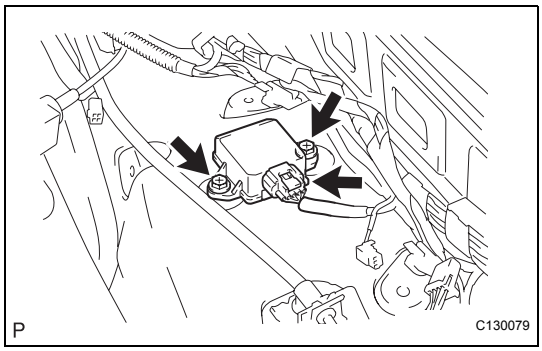

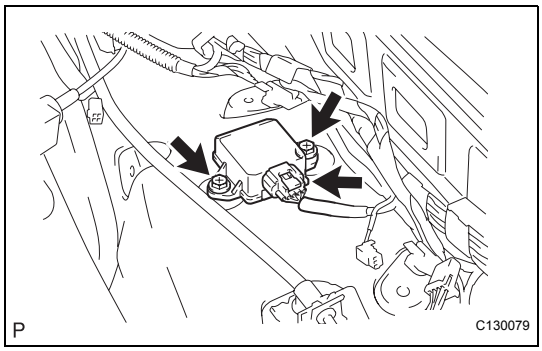

INSTALLATION

1. **INSTALL YAW RATE SENSOR**
   (a) Install the yaw rate sensor with the 2 bolts.
   Torque: 14 N*m (143 kgf*cm, 10 ft.*lbf)
   (b) Connect the yaw rate sensor connector.
2. **INSTALL CONSOLE BOX ASSEMBLY**
3. **INSTALL CONSOLE UPPER REAR PANEL SUB-ASSEMBLY**
4. **CONNECT CABLE TO NEGATIVE BATTERY TERMINAL**
5. **PERFORM YAW RATE SENSOR ZERO POINT CALIBRATION**
   (a) Perform the yaw rate sensor zero point calibration (See page BC-104).
6. **INSPECT ABS WARNING LIGHT AND VSC WARNING LIGHT**
   (a) Check that the ABS and VSC warning lights (See page BC-120).
7. **PERFORM INITIALIZATION**
   (a) Some systems need initialization after reconnecting the negative battery cable.

STEERING ANGLE SENSOR

COMPONENTS

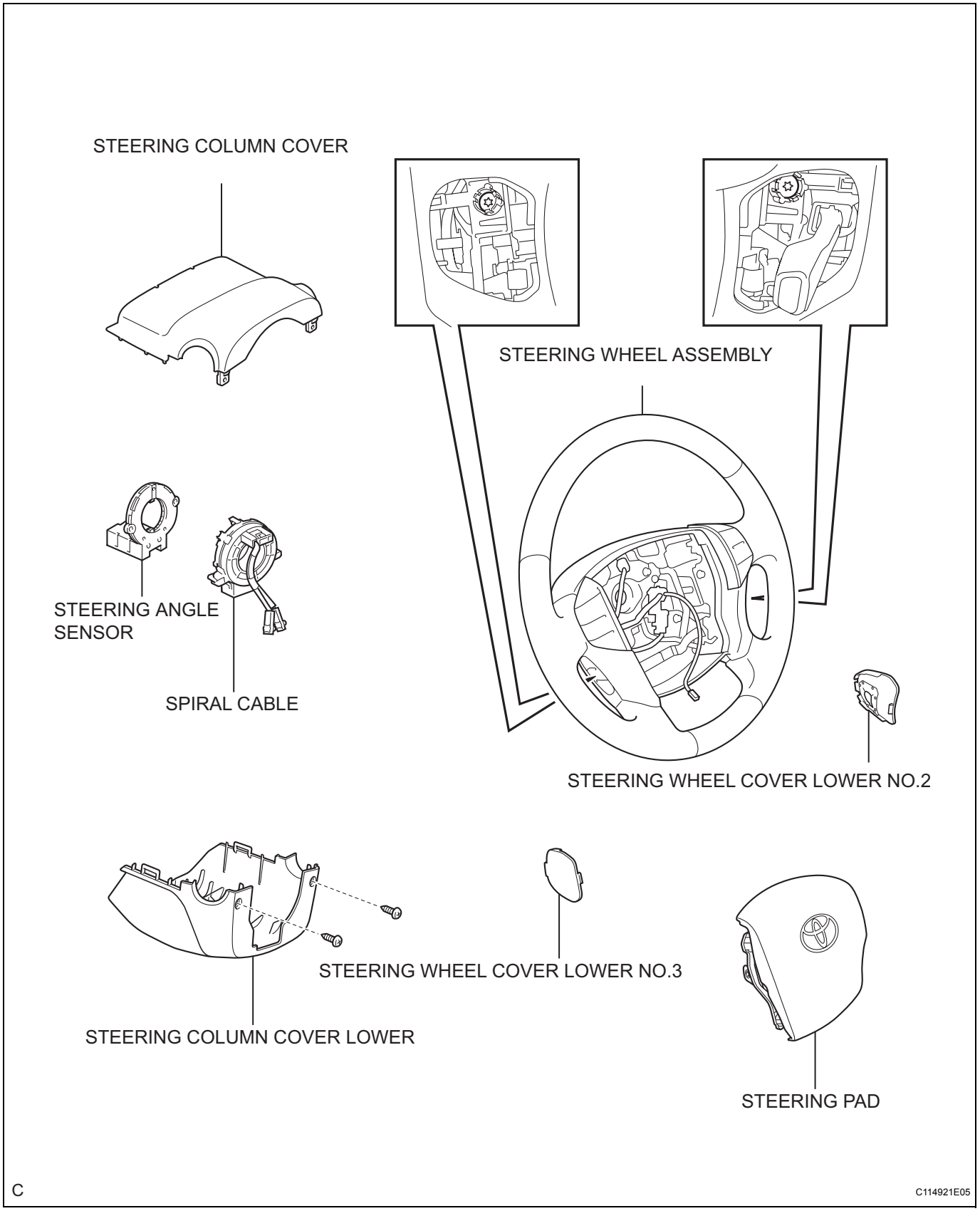

BC

REMOVAL

1. **PRECAUTION (See page RS-303)**
2. **DISCONNECT CABLE FROM NEGATIVE BATTERY TERMINAL (See page RS-303)**
3. **PLACE FRONT WHEELS FACING STRAIGHT AHEAD**
4. **REMOVE STEERING WHEEL COVER LOWER NO.2 (See page RS-304)**
5. **REMOVE STEERING WHEEL COVER LOWER NO.3 (See page RS-304)**
6. **REMOVE STEERING PAD (See page RS-304)**
7. **REMOVE STEERING WHEEL ASSEMBLY (See page SR-36)**
8. **REMOVE STEERING COLUMN COVER LOWER**
9. **REMOVE STEERING COLUMN COVER**
10. **REMOVE SPIRAL CABLE**
11. **REMOVE STEERING ANGLE SENSOR**
    (a) Disengage the 6 claws and remove the steering angle sensor from the spiral cable.

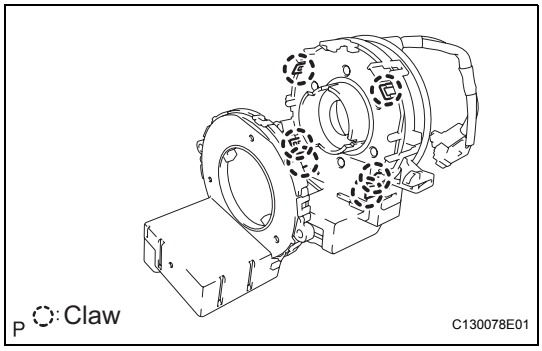

INSTALLATION

1. **INSTALL STEERING ANGLE SENSOR**
   (a) Install the steering angle sensor to the spiral cable.
   NOTICE:
   - **Engage the claws securely.**
   - **Do not damage the claws.**
2. **INSPECT SPIRAL CABLE (See page RS-315)**
3. **PLACE FRONT WHEELS FACING STRAIGHT AHEAD**
4. **INSTALL SPIRAL CABLE (See page RS-315)**
5. **CENTER SPIRAL CABLE (See page RS-316)**
6. **INSTALL STEERING WHEEL ASSEMBLY (See page SR-46)**
7. **INSTALL STEERING PAD (See page RS-305)**
8. **INSPECT STEERING PAD (See page RS-305)**
9. **CONNECT CABLE TO NEGATIVE BATTERY TERMINAL**
10. **INSPECT SRS WARNING LIGHT (See page RS-306)**

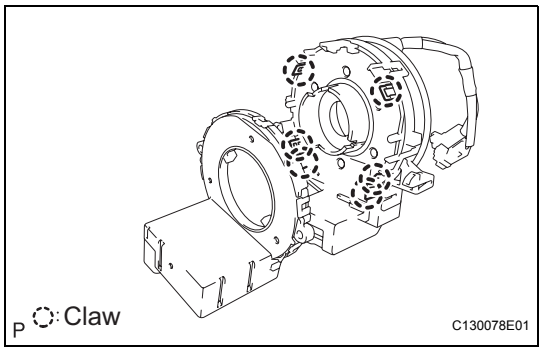

11. PERFORM INITIALIZATION

(a) Some systems need initialization after reconnecting the negative battery cable.

CAN COMMUNICATION SYSTEM

PRECAUTION

1. STEERING SYSTEM HANDLING PRECAUTIONS

(a) Care must be taken when replacing parts. Incorrect replacement could affect the performance of the steering system and result in hazardous driving.

2. SRS AIRBAG SYSTEM HANDLING PRECAUTIONS

(a) This vehicle is equipped with an SRS (Supplemental Restraint System) such as the driver's airbag and front passenger airbag. Failure to carry out service operations in the correct sequence could cause unexpected SRS deployment during servicing and may lead to a serious accident. Before servicing (including removal or installation of parts, inspection or replacement), be sure to read the precautionary notice for the Supplemental Restraint System (See page RS-1).

3. BUS LINE REPAIR

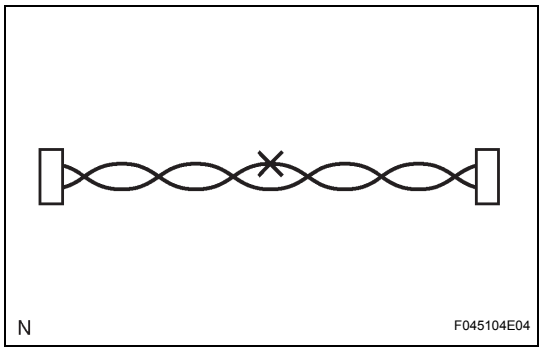

(a) After repairing the bus line with solder, wrap the repaired part with vinyl tape (See page IN-31).

NOTICE:

- **The CANL bus line and CANH bus line must be installed together, all the time.**
- **When installing, make sure to twist them.**
- **CAN bus lines are likely to be influenced by noise if the bus lines are not twisted.**
- **The difference in length of the CANL bus line and CANH bus line should be within 100mm (3.937 in.).**
- **Leave approximately 80 mm (3.150 in.) loose in the twist around the connector.**

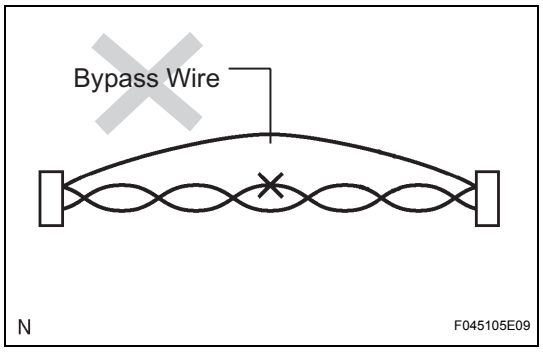

(b) Do not use bypass wiring between the connectors.

NOTICE:

The feature of the twisted wire harness will be lost if you use bypass wiring.

CA

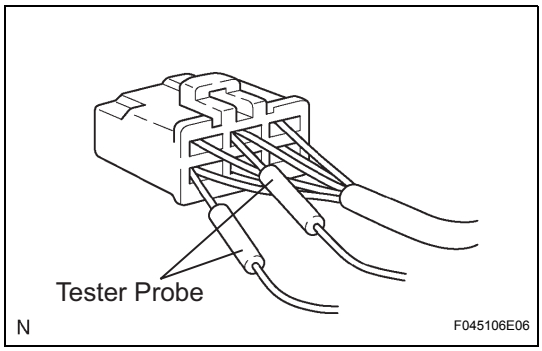

4. CONNECTOR HANDLING

(a) When inserting tester probes into a connector, insert them from the rear of the connector.

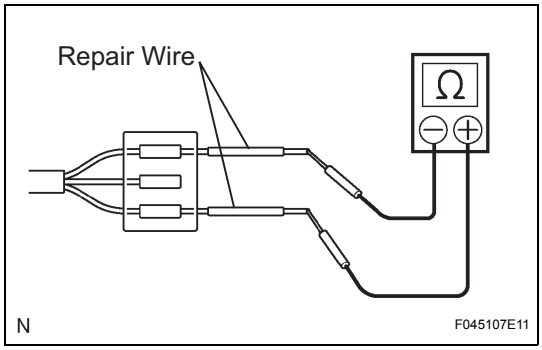

(b) Use a repair wire to check the connector if it is impossible to check continuity from the rear of the connector.

5. EXPRESSIONS OF IGNITION SWITCH

(a) The type of ignition switch used on this model differs according to the specifications of the vehicle. The expressions listed in the table below are used in this section.

Switch Type		Ignition Switch (position)	Engine Switch (condition)
Expression	Ignition Switch off	LOCK	Off
	Ignition Switch on (IG)	ON	On (IG)
	Ignition Switch on (ACC)	ACC	On (ACC)
	Engine Start	START	Start

PARTS LOCATION

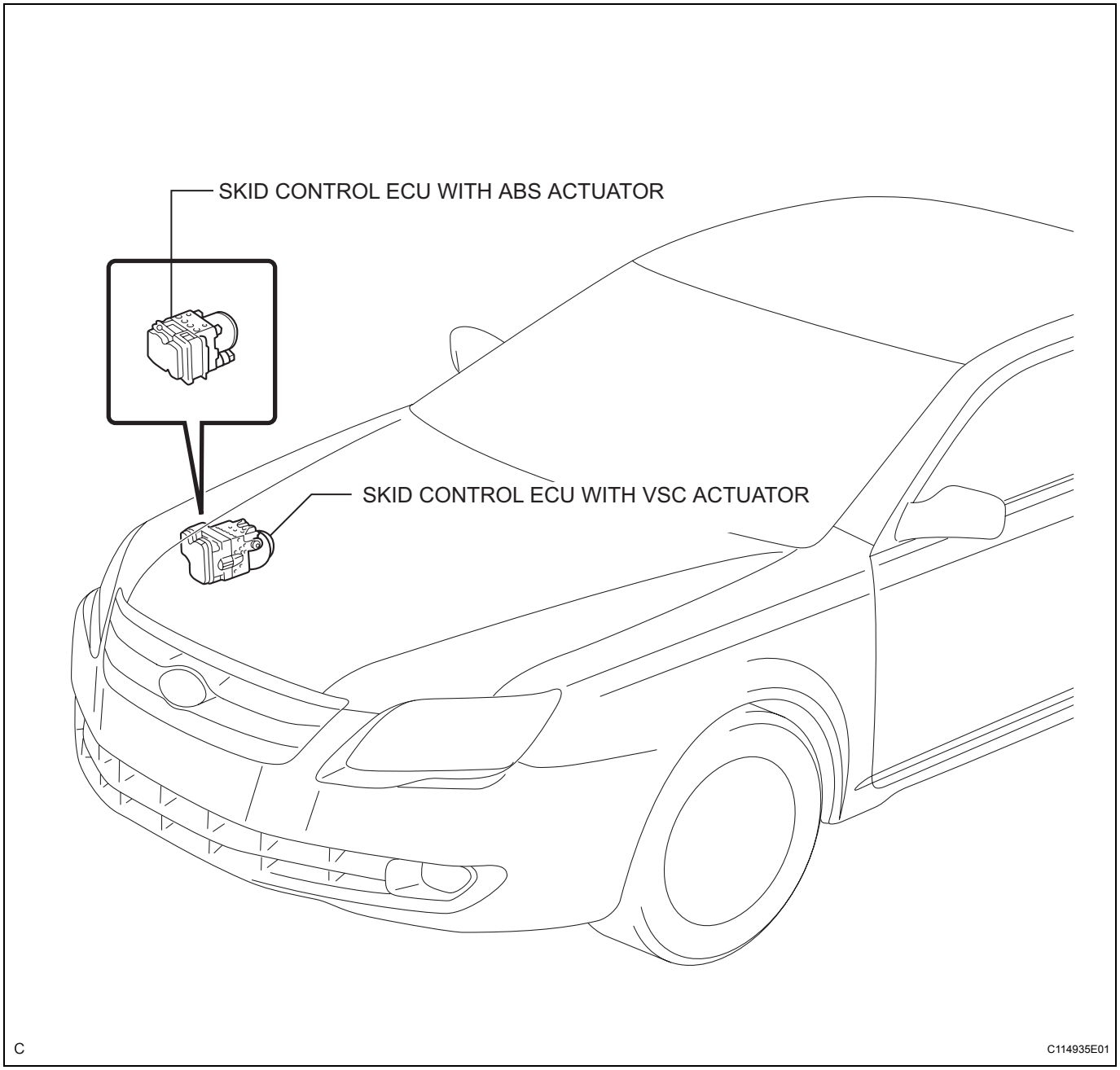

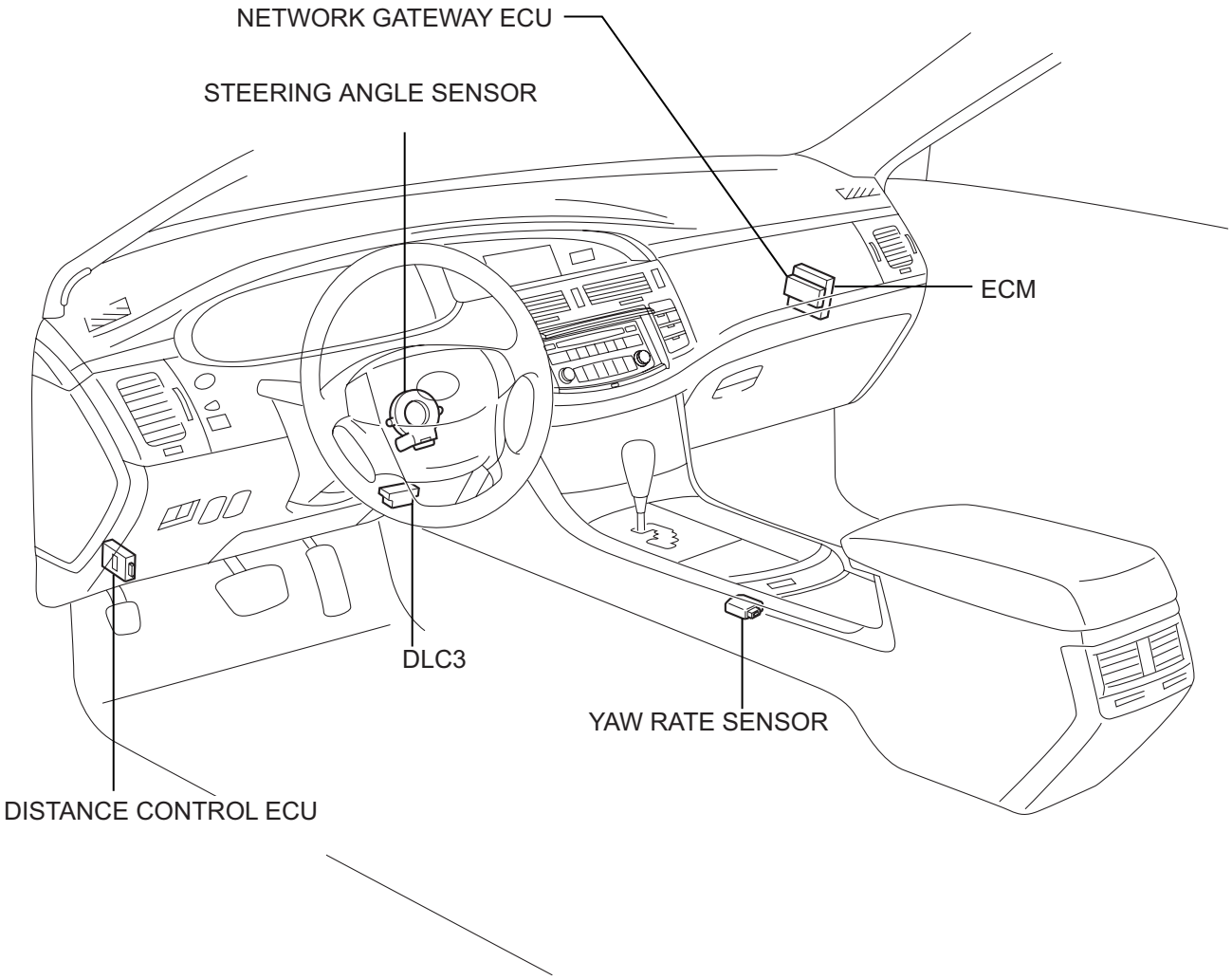

C

C114936E01

SYSTEM DIAGRAM

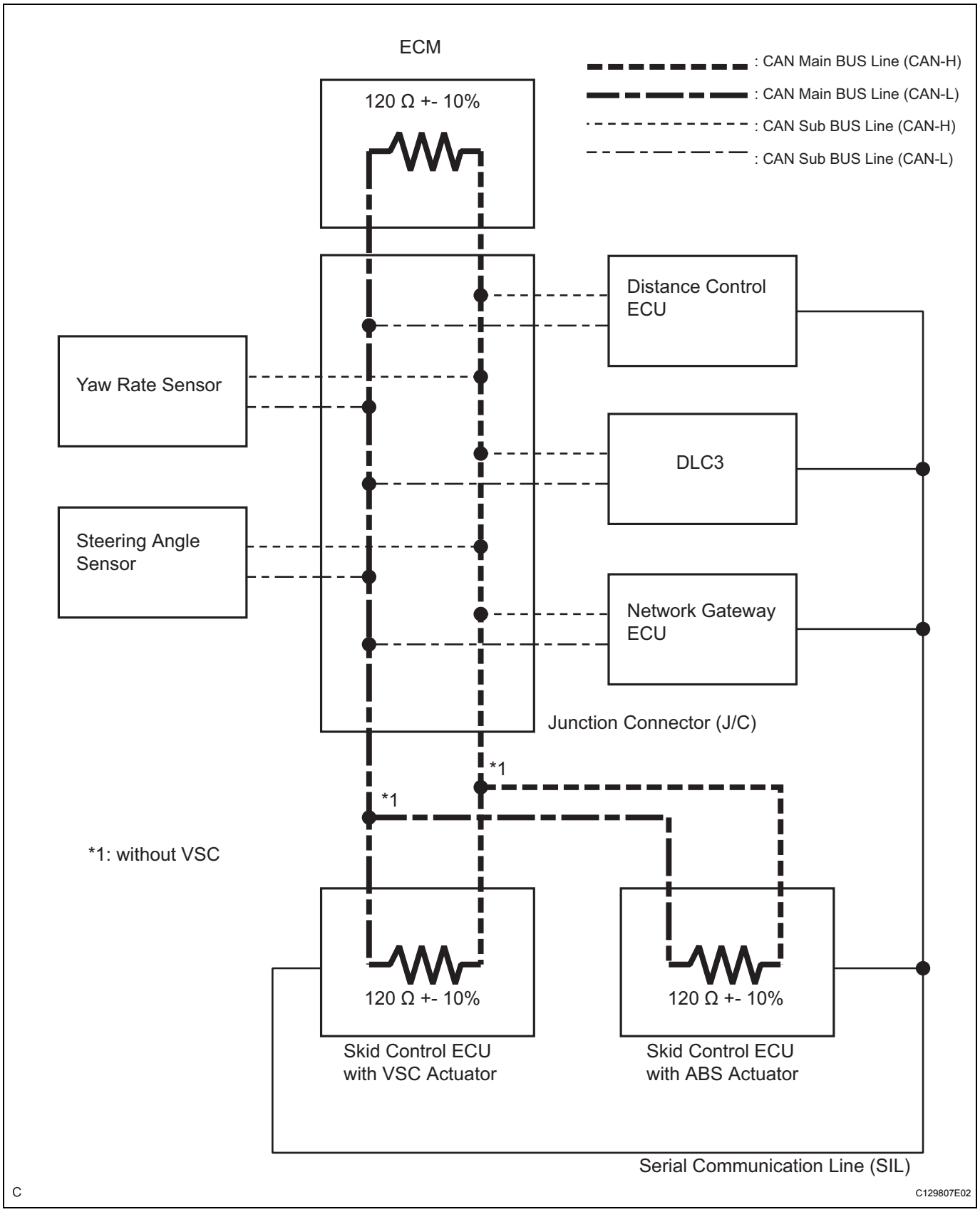

CA

HINT:

- The skid control ECU with actuator detects and stores steering angle sensor and yaw rate sensor DTCs and performs DTC communication by receiving information from the steering angle sensor and yaw rate sensor.
- The ECM uses the CAN communication system to perform DTC communication instead of the conventional communication line (SIL).

SYSTEM DESCRIPTION

1. BRIEF DESCRIPTION

(a) The CAN (Controller Area Network) is a serial data communication system for real time application. It is a vehicle multiplex communication system which has a high communication speed (500 kbps) and the ability to detect malfunctions.

(b) By pairing the CANH and CANL bus lines, the CAN performs communication based on differential voltage.

(c) Many ECUs (sensors) installed on the vehicle operate by sharing information and communicating with each other.

(d) The CAN has two resistors of 120 Ω which are necessary to communicate with the main bus line.

2. DEFINITION OF TERMS

(a) Main bus line

(1) The main bus line is a wire harness between the two terminus circuits on the bus (communication line). This is the main bus in the CAN communication system.

(b) Sub bus line

(1) The sub bus line is a wire harness which diverges from the main bus line to a ECU or sensor.

(c) Terminus circuit

(1) The terminus circuit is a circuit which is placed to convert communication current of the CAN communication into bus voltage. It consists of a resistor and condenser. Two terminus circuits are necessary on a bus.

3. ECUS OR SENSORS WHICH COMMUNICATE THROUGH CAN COMMUNICATION SYSTEM

(a) Skid Control ECU with ABS Actuator

(b) Skid Control ECU with VSC Actuator

(c) Yaw Rate Sensor

(d) Steering Angle Sensor

(e) Distance Control ECU

(f) ECM

(g) Network Gateway ECU

4. DIAGNOSTIC CODE FOR CAN COMMUNICATION SYSTEM

(a) DTCs for the CAN communication system are as follows:

U0073, U0100, U0101, U0122, U0123, U0124, U0126, U0132, U1101

NOTICE:

U0001, U0235, and U1102 are displayed on the intelligent tester "Communication Malfunction DTC" (See page ES-60) screen, but they are not DTCs in the CAN communication system. Refer to troubleshooting of each system.

5. REMARK FOR TROUBLESHOOTING

(a) Trouble in the CAN bus (communication line) can be checked from the DLC3 (except when there is a wire break other than in the sub bus line of the DLC3).
NOTICE:
Do not insert the tester directly into the DLC3 connector. Be sure to use a service wire.

(b) DTCs regarding the CAN communication system can be checked using the intelligent tester.

(c) The CAN communication system cannot detect trouble in the sub bus line of the DLC3 even though the DLC3 is also connected to the CAN communication system.

6. HOW TO DISTINGUISH THE JUNCTION CONNECTOR (J/C)

(a) In the CAN communication system, the shape of all connectors connected to the J/C is the same. The connectors connected to the J/C can be distinguished by the colors of the bus lines and the connecting side of the connector.
HINT:
See "TERMINALS OF ECU" (See page CA-10) for bus line color or the type of connecting surface.

HOW TO PROCEED WITH TROUBLESHOOTING

NOTICE:

- **DTCs for the CAN communication system are as follows:**
  U0073, U0100, U0101, U0122, U0123, U0124, U0126, U0132, U0145, U1101.
- **Refer to troubleshooting of each system if DTCs regarding the CAN communication system are not output.**

1	**CHECK AND CLEAR DTCs**

NEXT

2	**CHECK FOR INSTALLED SYSTEMS (ECUS & SENSORS) THAT ADOPT CAN COMMUNICATION**

(a) Check which of the following is adopted: dynamic radar / laser cruise control and vehicle stability control.

NEXT

3	**CHECK CAN BUS LINE**

NEXT

4	**CHECK INTELLIGENT TESTER VIA CAN VIM**

(a) Select "BUS CHECK" (See page CA-35)
Standard:
All ECUs and sensors connected to the CAN communication system are displayed.
NOTICE:

- **The systems (ECUs, sensors) that adopt CAN communication vary depending on the vehicle and option settings. Check which systems (ECUs, sensors) are installed on the vehicle.**
- **Non-installed ECUs or sensors are not displayed. Do not mistake them for being in the communication stop mode.**

NO → **COMMUNICATION STOP MODE TABLE**

YES

5	**DTC COMBINATION TABLE**

(a) Confirm trouble according to the combination of output DTCs regarding the CAN communication system.

CA

HINT:
Previous CAN communication system DTCs may be the cause if CAN communication system DTCs are output and all ECUs and sensors connected to the CAN communication system are displayed on the intelligent tester's "BUS CHECK" screen via the CAN VIM.

NEXT

6	CIRCUIT INSPECTION

NEXT

7	IDENTIFICATION OF PROBLEM

NEXT

8	REPAIR OR REPLACE

NEXT

9	CONFIRMATION TEST

NEXT

END

PROBLEM SYMPTOMS TABLE

1. COMMUNICATION STOP MODE TABLE

(a) Check that there is no open circuit in the CAN main bus line, short between the lines, or short to +B in the "CHECK CAN BUS LINE" . Select "BUS CHECK" on the intelligent tester via the CAN VIM.

(b) Check that the communication stop mode of the ECUs or sensors is not displayed among the following: "ENGINE", "ECT", "CRUISE CONTROL", "ABS / VSC / TRAC", "YAW / DECELERAT", "STEERING SENSOR", and "BODY / GATEWAY".

NOTICE:

- **Systems using the CAN communication system differ according to optional settings. Check which ECUs or sensors are installed on the vehicle.**
- **Non-installed ECUs or sensors are not displayed. Be careful not to consider that they are in communication stop mode.**
- **If 2 or more ECUs or sensors are not displayed on the intelligent tester via the CAN VIM, perform troubleshooting for communication stop mode for each undisplayed ECU or sensor. (Either side of the CAN bus lines may be open.)**

CAN COMMUNICATION SYSTEM

Symptom	Suspected area	See page
"ENGINE" and "ECT" are not displayed on the intelligent tester via CAN VIM. (*1)	ECM COMMUNICATION STOP MODE	CA-29
"ABS / VSC / TRAC" is not displayed on the intelligent tester via CAN VIM. (*1)	SKID CONTROL ECU COMMUNICATION STOP MODE	CA-18
"ABS / VSC / TRAC" is not displayed on the intelligent tester via CAN VIM. (*1)	SKID CONTROL ECU WITH ACTUATOR COMMUNICATION STOP MODE	CA-18
"STEERING SENSOR" is not displayed on the intelligent tester via CAN VIM. (*1)	STEERING SENSOR COMMUNICATION STOP MODE	CA-25
"YAW / DECELERAT" is not displayed on the intelligent tester via CAN VIM. (*1)	YAW RATE SENSOR COMMUNICATION STOP MODE	CA-27
"CRUISE CONTROL" is not displayed on the intelligent tester via CAN VIM. (*2)	DISTANCE CONTROL ECU COMMUNICATION STOP MODE	CA-21
"BODY / GATEWAY" is not displayed on the intelligent tester via CAN VIM. (*1)	GATEWAY ECU COMMUNICATION STOP MODE	CA-23

TERMINALS OF ECU

HINT:
This section describes the standard CAN values for all CAN related components.

1. JUNCTION CONNECTOR (J/C)

(a) CAN J/C A side (w/ earth terminal) and CAN J/C B side (w/o earth terminal):
HINT:
- The connectors connected to the junction connector (J/C) can be distinguished by the colors of the bus lines and the connecting side of the connector.
- The connectors can be connected to any terminals on the same side.

CAN J/C A Side (w/ Earth Terminal):

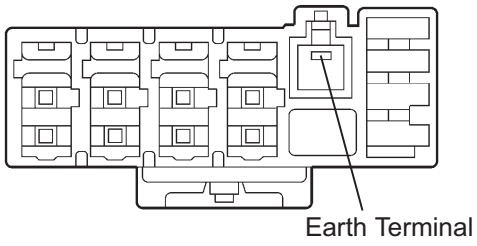

CAN J/C B Side (w/o Earth Terminal):

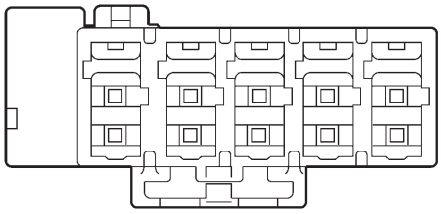

G026214E11

CAN J/C Connectors (A side, w/ earth terminal)	Color (CAN-H Side)	Color (CAN-L Side)
Steering sensor	L	W
Yaw rate sensor	R	W
ECM	G	W
DLC3	P	W

CAN J/C Connectors (B side, w/o earth terminal)	Color (CAN-H Side)	Color (CAN-L Side)
Skid control ECU with VSC actuator	B	W
Skid control ECU with ABS actuator	B	W
Distance control ECU	L	W
Network gateway ECU	W	V

(b) The terminals on connectors for the J/C:

CAN J/C Connector Front View:

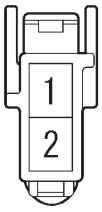

G026205E07

Terminal	Terminal symbol
1	CANH
2	CANL

CA

(c) WIRING DIAGRAM FOR IDENTIFYING J/C CONNECTORS

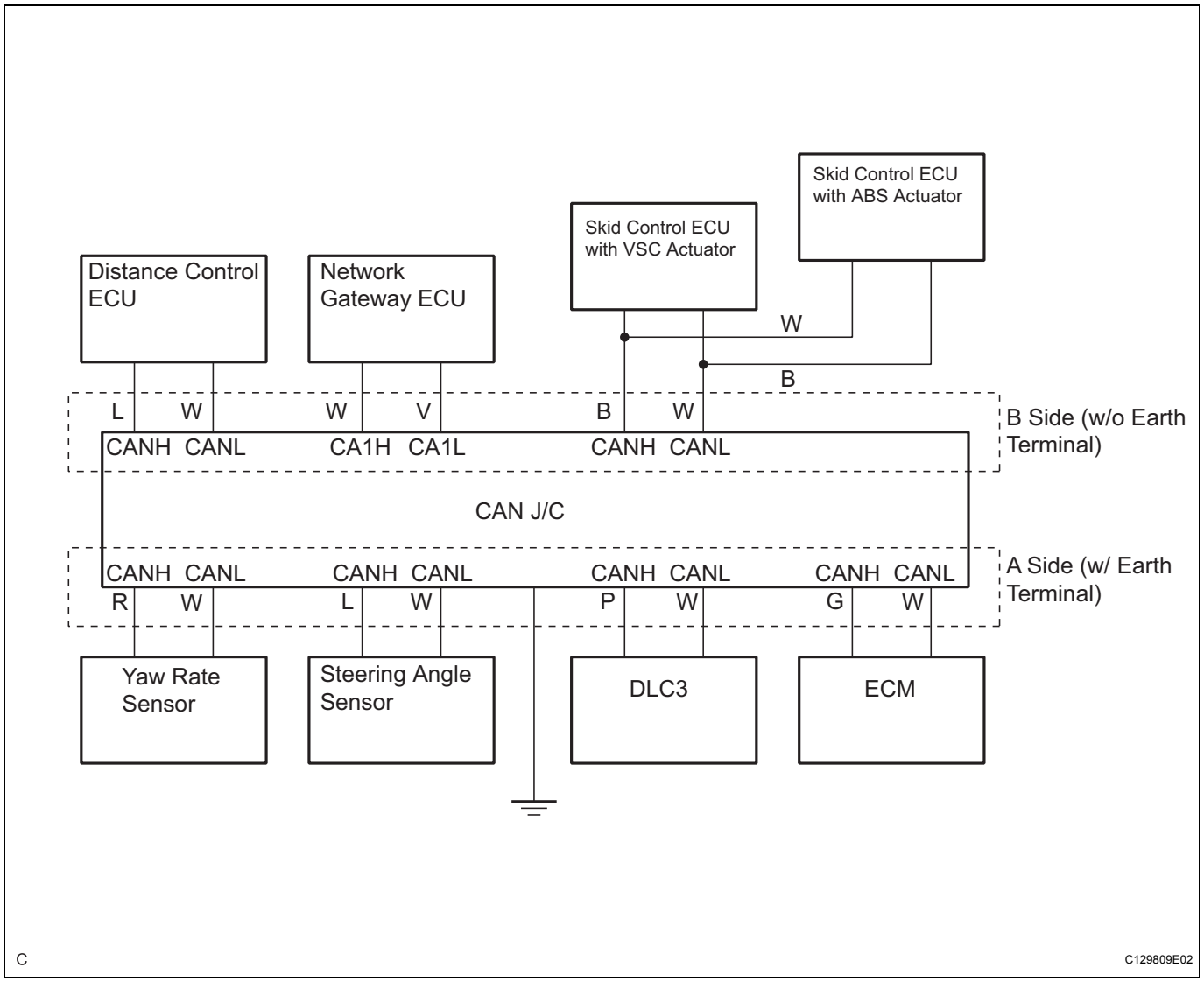

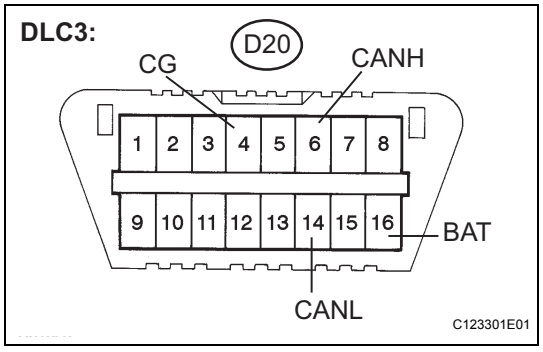

2. DLC3

(a) Measure the resistance according to the value(s) in the table below.

Resistance

Terminals	Wiring Color	Condition	Specified Condition
D20-6 (CANH) - D20-14 (CANL)	P - W	Ignition switch off	54 to 69 Ω
D20-6 (CANH) - D20-4 (CG)	P - W-B	Ignition switch off	1 kΩ or more
D20-14 (CANL) - D20-4 (CG)	W - W-B	Ignition switch off	1 kΩ or more
D20-6 (CANH) - D20-16 (BAT)	P - L	Ignition switch off	1 MΩ or more
D20-14 (CANL) - D20-16 (BAT)	W - L	Ignition switch off	1 MΩ or more

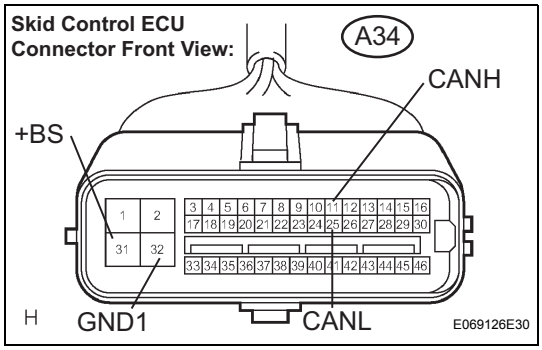

3. SKID CONTROL ECU (Skid control ECU with VSC Actuator)

(a) Disconnect the connector from the skid control ECU.

(b) Measure the resistance according to the value(s) in the table below.

Resistance

Terminals	Wiring Color	Condition	Specified Condition
A34-11 (CANH) - A34-25 (CANL)	B - W	Ignition switch off	108 to 132 Ω
A34-11 (CANH) - A34-32 (GND1)	B - W-B	Ignition switch off	1 kΩ or more
A34-25 (CANL) - A34-32 (GND1)	W - W-B	Ignition switch off	1 kΩ or more
A34-11 (CANH) - A34-31 (+BS)	B - L	Ignition switch off	1 MΩ or more
A34-25 (CANL) - A34-31 (+BS)	W - L	Ignition switch off	1 MΩ or more

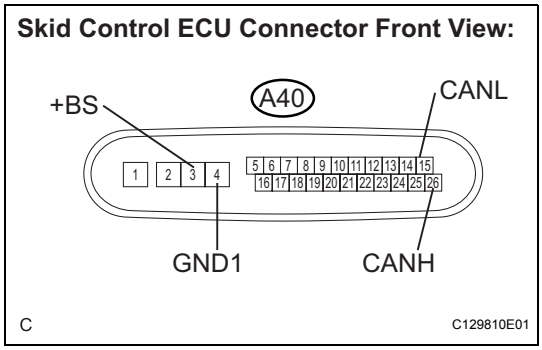

4. SKID CONTROL ECU (Skid control ECU with ABS Actuator)

(a) Disconnect the connector from the skid control ECU.

(b) Measure the resistance according to the value(s) in the table below.

Resistance

Terminals	Wiring Color	Condition	Specified Condition
A40-26 (CANH) - A40-15 (CANL)	B - W	Ignition switch off	108 to 132 Ω
A40-26 (CANH) - A40-4 (GND1)	B - W-B	Ignition switch off	1 kΩ or more
A40-15 (CANL) - A40-4 (GND1)	W - W-B	Ignition switch off	1 kΩ or more
A40-26 (CANH) - A40-3 (+BS)	B - L	Ignition switch off	1 MΩ or more
A40-15 (CANL) - A40-3 (+BS)	W - L	Ignition switch off	1 MΩ or more

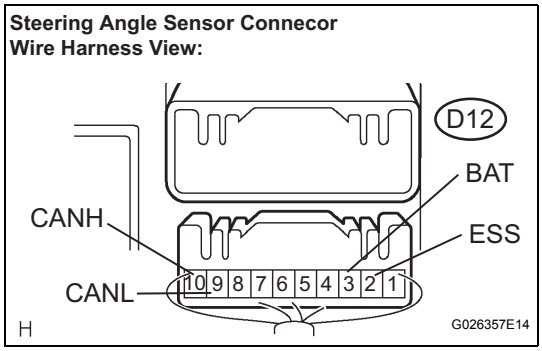

5. STEERING ANGLE SENSOR

(a) Disconnect the connector from the steering angel sensor.

(b) Measure the resistance according to the value(s) in the table below.

Resistance

Terminals	Wiring Color	Condition	Specified Condition
D12-10 (CANH) - D12-9 (CANL)	L - W	Ignition switch off	54 to 69 Ω
D12-10 (CANH) - D12-2 (ESS)	L - W-B	Ignition switch off	1 kΩ or more
D12-9 (CANL) - D12-2 (ESS)	W - W-B	Ignition switch off	1 kΩ or more
D12-10 (CANH) - D12-3 (BAT)	L - LG	Ignition switch off	1 MΩ or more

Terminals	Wiring Color	Condition	Specified Condition
D12-9 (CANL) - D12-3 (BAT)	W - LG	Ignition switch off	1 MΩ or more

Yaw Rate Sensor Connector Front View:

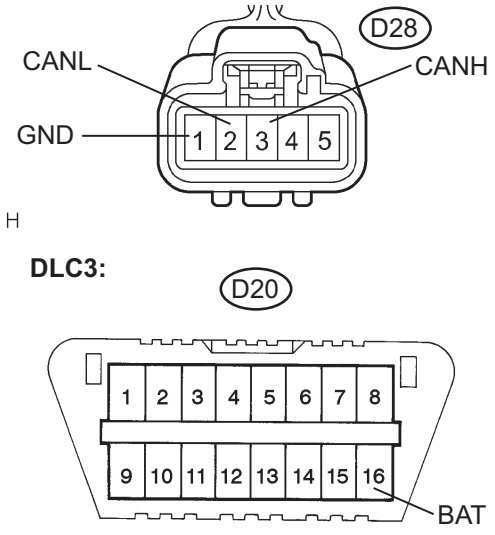

6. YAW RATE SENSOR

(a) Disconnect the connector from the yaw rate sensor.
(b) Measure the resistance according to the value(s) in the table below.

Resistance

Terminals	Wiring Color	Condition	Specified Condition
D28-3 (CANH) - D28-2 (CANL)	R - W	Ignition switch off	54 to 69 Ω
D28-3 (CANH) - D28-1 (GND)	R - W-B	Ignition switch off	1 kΩ or more
D28-2 (CANL) - D28-1 (GND)	W - W-B	Ignition switch off	1 kΩ or more
D28-3 (CANH) - D20-16 (BAT)	R - L	Ignition switch off	1 MΩ or more
D28-2 (CANL) - D20-16 (BAT)	W - L	Ignition switch off	1 MΩ or more

Distance Control ECU Connector Wire Harness View:

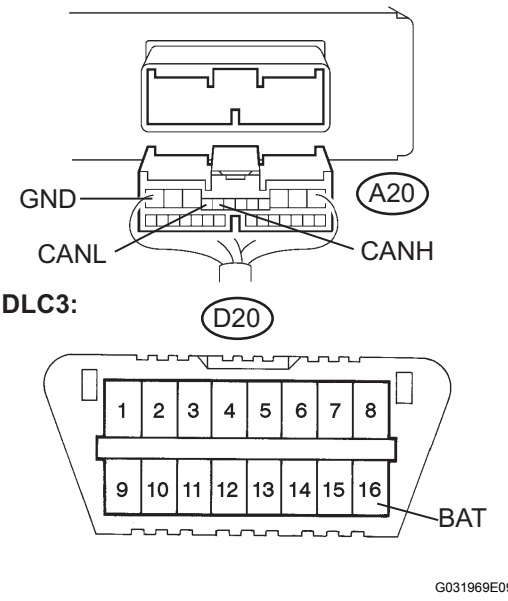

7. Distance CONTROL ECU

(a) Disconnect the connector from the distance control ECU.

CA

(b) Measure the resistance according to the value(s) in the table below.

Resistance

Terminals	Wiring Color	Condition	Specified Condition
A20-8 (CANH) - A20-9 (CANL)	L - W	Ignition switch off	54 to 69 Ω
A20-8 (CANH) - A20-12 (GND)	L - R	Ignition switch off	1 kΩ or more
A20-9 (CANL) - A20-12 (GND)	W - R	Ignition switch off	1 kΩ or more
A20-8 (CANH) - D20-16 (BAT)	L - L	Ignition switch off	1 MΩ or more
A20-9 (CANL) - D20-16 (BAT)	W - L	Ignition switch off	1 MΩ or more

ECM Connector Wire Harness View:

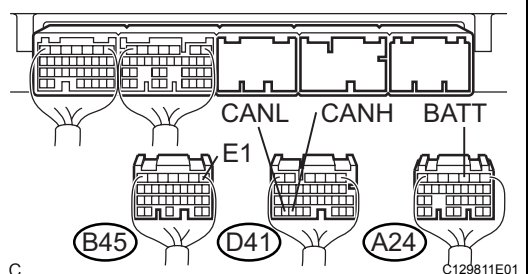

8. ECM

(a) Disconnect the connector from the ECM (A24) (B25) (D41).

(b) Measure the resistance according to the value(s) in the table below.

Resistance

Terminals	Wiring Color	Condition	Specified Condition
D41-33 (CANH) - D41-34 (CANL)	G - W	Ignition switch off	108 to 132 Ω
D41-33 (CANH) - B24-1 (E1)	G	Ignition switch off	1 kΩ or more
D41-34 (CANL) - B24-1 (E1)	W	Ignition switch off	1 kΩ or more
D41-33 (CANH) - A24-3 (BATT)	G - B	Ignition switch off	1 MΩ or more
D41-34 (CANL) - A24-3 (BATT)	W - B	Ignition switch off	1 MΩ or more

Network Gateway ECU Connector Wire Harness View:

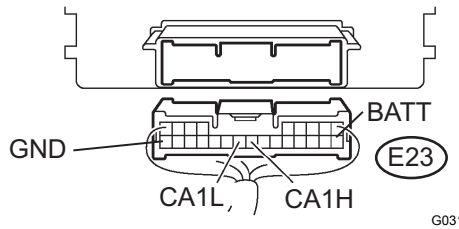

9. NETWORK GATEWAY ECU

(a) Disconnect the connector from the network gateway ECU (E23).

(b) Measure the resistance according to the value(s) in the table below.

Resistance

Terminals	Wiring Color	Condition	Specified Condition
E23-17 (CA1H) - E23-18 (CA1L)	W - V	Ignition switch off	54 to 69 Ω
E23-17 (CA1H) - E23-24 (GND)	W - W-B	Ignition switch off	1 kΩ or more
E23-18 (CA1L) - E23-24 (GND)	V - W-B	Ignition switch off	1 kΩ or more
E23-17 (CA1H) - E23-10 (BATT)	W - B	Ignition switch off	1 MΩ or more
E23-18 (CA1L) - E23-10 (BATT)	V - B	Ignition switch off	1 MΩ or more

DIAGNOSIS SYSTEM

1. BUS CHECK

HINT:
The ECUs and sensors that are properly connected to the CAN communication system can be displayed using the intelligent tester via CAN VIM.

(a) Select "BUS CHECK" from the "OBD / MOBD MENU" screen.

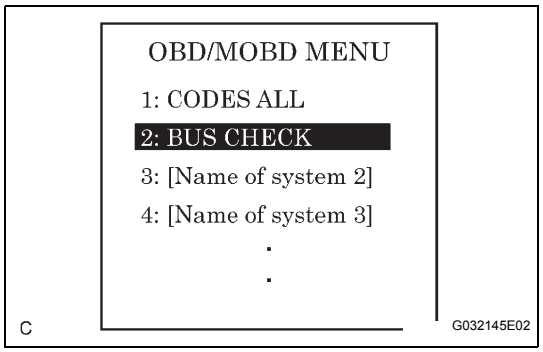

(b) Press "ENTER" on the intelligent tester via CAN VIM.

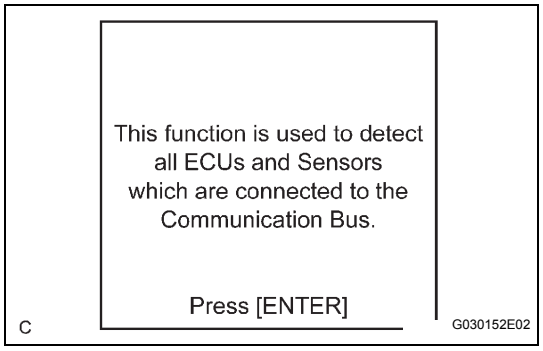

(c) The screen displays the ECUs and sensors that are properly connected to the CAN communication system.
HINT:
There is a communication stop in the system of any properly connected ECUs or sensors that are not displayed.

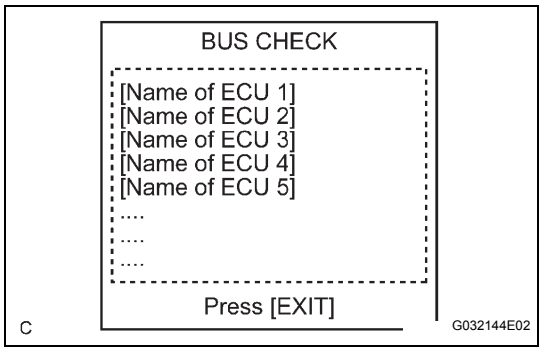

2. CHECK FOR INSTALLED SYSTEMS (ECUS & SENSORS) THAT ADOPT CAN COMMUNICATION

(a) Systems (ECUs, sensors) that adopt CAN communication vary depending on the vehicle's optional settings. Check which systems (ECUs, sensors) are installed on the vehicle.

ECU / Sensor name	Check method
Skid control ECU	Installed on all vehicles.
Steering angle sensor	Installed on all vehicles.
Yaw rate sensor	Installed on all vehicles.
ECM	Installed on all vehicles.
Distance control ECU *1	The millimeter wave laser sensor is installed on the front of the vehicles.
Gateway ECU	Installed on all vehicles.

HINT:
*1: with Dynamic laser cruise control system only.

CA

3. DTC TABLE BY ECU

HINT:

- In the CAN communication system, CAN communication system DTCs can be displayed by the ECU using the intelligent tester (See page CA-9).
- If CAN communication system DTCs are output, trouble cannot be determined only by the DTCs. Perform troubleshooting according to "HOW TO PROCEED WITH TROUBLE SHOOTING" (See page CA-7). (If, however, U0235 or U1102 is output alone, check the dynamic laser cruise control system.)

(a) ECM

HINT:

- DTC communication uses the CAN communication system.
- Cruise control ECU data is also output.

DTC No.	Detection Item
U0001 (*1)	High Speed CAN Communication Bus
U0100 (*3)	Lost Communication With ECM/PCM "A"
U0122 (*3)	Lost Communication With Vehicle Dynamics Control Module
U0123 (*3)	Lost Communication With Yaw Rate Sensor Module
U0126 (*3)	Lost Communication With Steering Angle Sensor Module
U0235 (*2) (*3)	Lost Communication With Cruise Control Front Distance Range Sensor
U1101 (*3)	Lost Communication With Distance Control ECU
U1102 (*2) (*3)	Lost Communication With Distance Control ECU

- *1: The ECM is malfunctioning if U0001 is output alone. Replace the ECM.
- *2: Displayed on the "Communication Malfunction DTC" screen of the intelligent tester. If U0235 or U1102 is output alone, CAN communication is normal (See page CC-85 or CC-88).
- *3: Dynamic laser cruise control system DTC.

(b) SKID CONTROL ECU

HINT:

DTC communication uses the SIL line.

DTC No.	Detection Item
U0073	Control Module Communication Bus Off
U0100	Lost Communication With ECM/PCM "A"
U0123	Lost Communication With Yaw Rate Sensor Module
U0124	Lost Communication With Lateral Acceleration Sensor Module
U0126	Lost Communication With Steering Angle Sensor Module

(c) NETWORK GATEWAY ECU

HINT:

The gateway ECU is connected to the CAN communication system but CAN communication system DTCs are not output.

FAIL-SAFE CHART

1. FAIL-SAFE FUNCTION

(a) When communication fails in any of the CAN bus lines (communication lines) due to a short circuit or other causes, the fail-safe function, which is specified for each system, operates to prevent the system from malfunctioning.

(b) It is effective on each system when communication is impossible. (For further details, see the pages for each system.)

Function	ECM	Skid Control ECU (with VSC)	Skid Control ECU (without VSC)	Steering Sensor	Yaw Rate Sensor	Cruise Control ECU	Gateway ECU	Condition when communication is impossible	DTC detection (Driver detectable)
VSC Control (Controls driving force while VSC is in operation)	○	●	-	○	○	-	-	VSC function stops	Detectable (Light comes on)
Dynamic Laser Cruise (Maintains vehicle-to-vehicle distance)	○	○	-	○	○	●	-	Vehicle-to-vehicle distance control does not operate	Detectable (Light comes on)
Meter Display (Displays operation condition and DTCs)	○	○	○	-	-	-	● (Meter)	Light does not come on or remains on	Recognizable from indicator lamp malfunction

HINT:

- ●: Control master
- ○: System related

CA

Skid Control ECU Communication Stop Mode

DESCRIPTION

Detection Item	Symptom	Trouble Area
SKID CONTROL ECU COMMUNICATION STOP MODE (*1)	• "ABS/VSC/TRAC" is not displayed on the "BUS CHECK" screen of the intelligent tester. • Applies to "SKID CONTROL ECU COMMUNICATION STOP MODE" in the "DTC COMBINATION TABLE".	• Power source or inside the skid control ECU with ABS actuator • Skid control ECU with ABS actuator main bus line or connector
SKID CONTROL ECU COMMUNICATION STOP MODE (*2)	• "ABS/VSC/TRAC" is not displayed on the "BUS CHECK" screen of the intelligent tester. • Applies to "SKID CONTROL ECU COMMUNICATION STOP MODE" in the "DTC COMBINATION TABLE".	• Power source or inside the skid control ECU with ABS actuator • Skid control ECU with ABS actuator main bus line or connector

HINT:
- *1: without VSC
- *2: with VSC

WIRING DIAGRAM

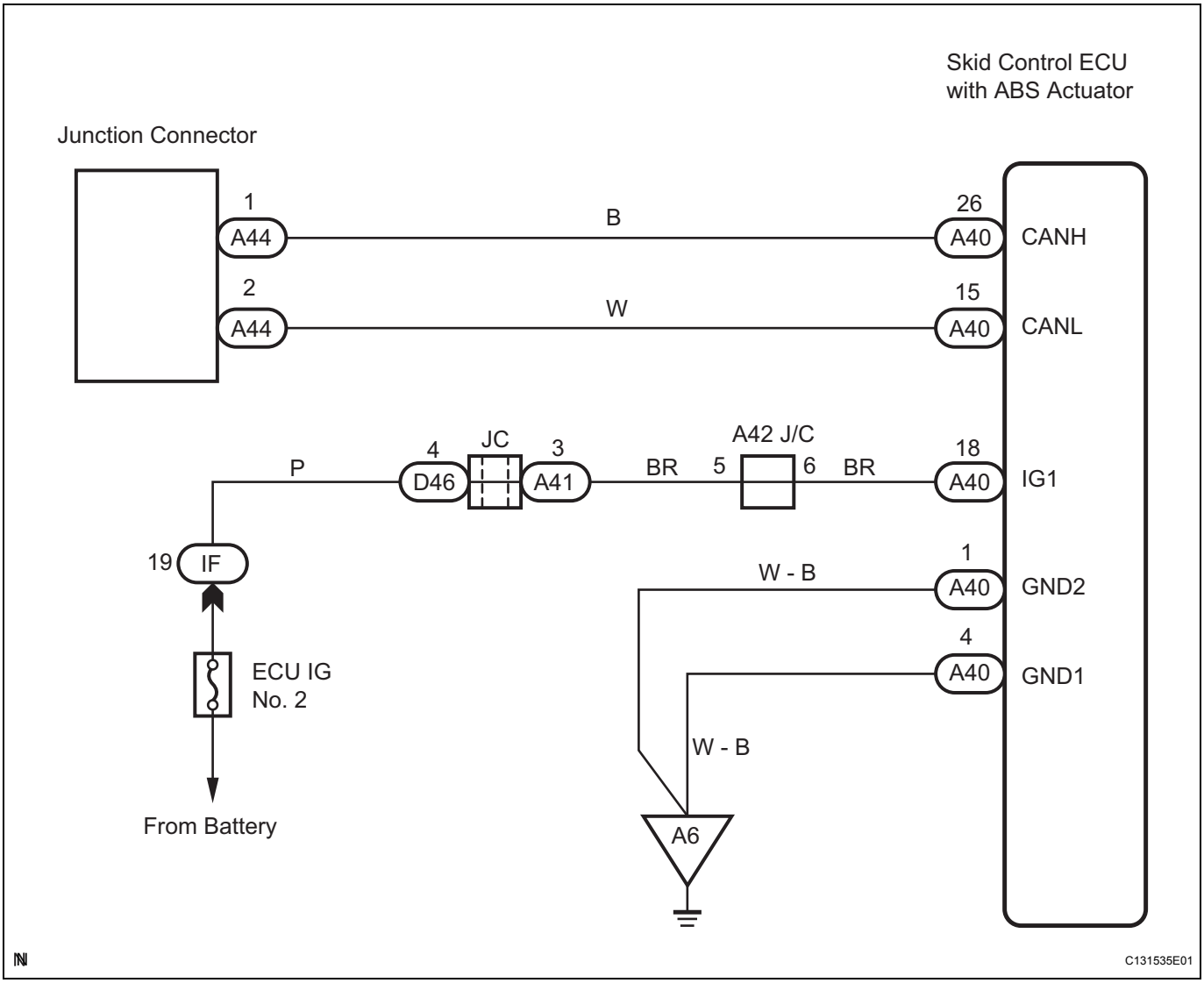

INSPECTION PROCEDURE

1 CHECK VEHICLE

(a) Check the vehicle type.

Result

Vehicle type	Proceed to
without VSC	A
with VSC	B

B → Go to step 4

A →

2 CHECK CAN BUS LINE (SKID CONTROL ECU MAIN BUS LINE DISCONNECTION)

Skid Control ECU Connector Wire Harness View:

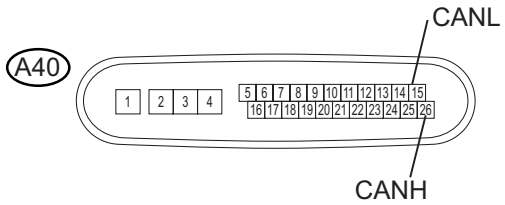

(a) Turn the ignition switch off.
(b) Disconnect the skid control ECU connector (A40).
(c) Measure the resistance according to the value(s) in the table below.
Resistance

Tester Connection	Condition	Specified value
A40-26 (CANH) - A40-15 (CANL)	Ignition switch off	108 to 132 Ω

NG → REPAIR OR REPLACE WIRE HARNESS AND CONNECTOR (CAN-H, CAN-L)

OK →

3 CHECK WIRE HARNESS (IG1, GND1)

Skid Control ECU Connector Wire Harness View:

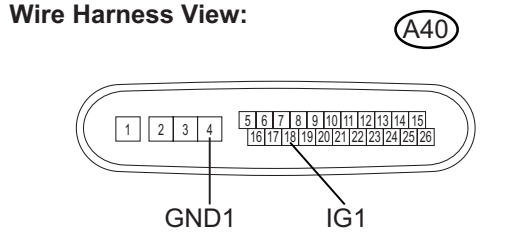

(a) Measure the resistance and voltage according to the value(s) in the table below.
Resistance and voltage

Tester Connection	Condition	Specified value
A40-4 (GND1) - Body ground	Always	Below 1 Ω
A40-3 (IG1) - Body ground	Ignition switch on (IG)	10 to 14 V

NG → REPAIR OR REPLACE WIRE HARNESS AND CONNECTOR

OK →

REPLACE SKID CONTROL ECU WITH ACTUATOR

4	CHECK CAN BUS LINE (SKID CONTROL ECU MAIN BUS LINE DISCONNECTION)

Skid Control ECU Connector Front View:

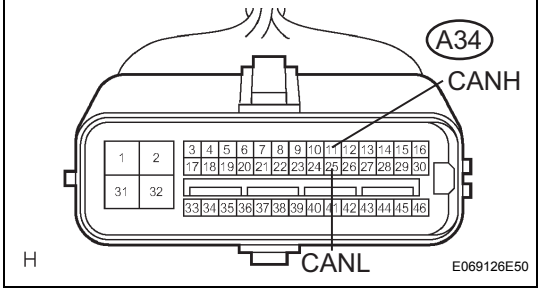

(a) Turn the ignition switch off.
(b) Disconnect the skid control ECU connector (A34).
(c) Measure the resistance according to the value(s) in the table below.

Resistance

Tester Connection	Condition	Specified value
A34-11 (CANH) - A34-25 (CANL)	Ignition switch off	108 to 132 Ω

NG → **REPAIR OR REPLACE WIRE HARNESS AND CONNECTOR (CAN-H, CAN-L)**

OK

5	CHECK WIRE HARNESS (IG1, GND1, GND2)

Skid Control ECU Connector Front View:

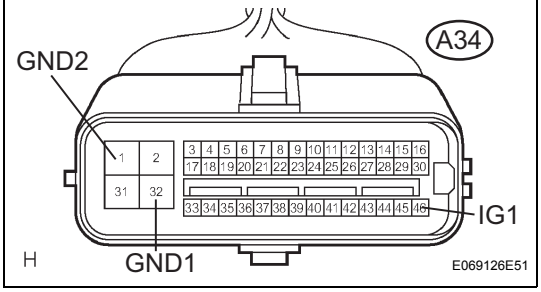

(a) Measure the resistance according to the value(s) in the table below.

Resistance and voltage

Tester Connection	Condition	Specified value
A34-1 (GND2) - Body ground	Always	Below 1 Ω
A34-32 (GND1) - Body ground	Always	Below 1 Ω
A34-46 (IG1) - Body ground	Ignition switch on (IG)	10 to 14 V

NG → **REPAIR OR REPLACE WIRE HARNESS AND CONNECTOR**

OK

REPLACE SKID CONTROL ECU WITH ACTUATOR

Distance Control ECU Communication Stop Mode

DESCRIPTION

Detection Item	Symptom	Trouble Area
DISTANCE CONTROL ECU COMMUNICATION STOP MODE	• "CRUISE CONTROL" is not displayed on the "BUS CHECK" screen of the intelligent tester. • Applies to "DISTANCE CONTROL ECU COMMUNICATION STOP MODE" in the "DTC COMBINATION TABLE".	• Power source or inside the distance control ECU • Distance control ECU sub bus line or connector

NOTICE:
This is not applicable to a vehicle without a dynamic laser cruise control system.

WIRING DIAGRAM

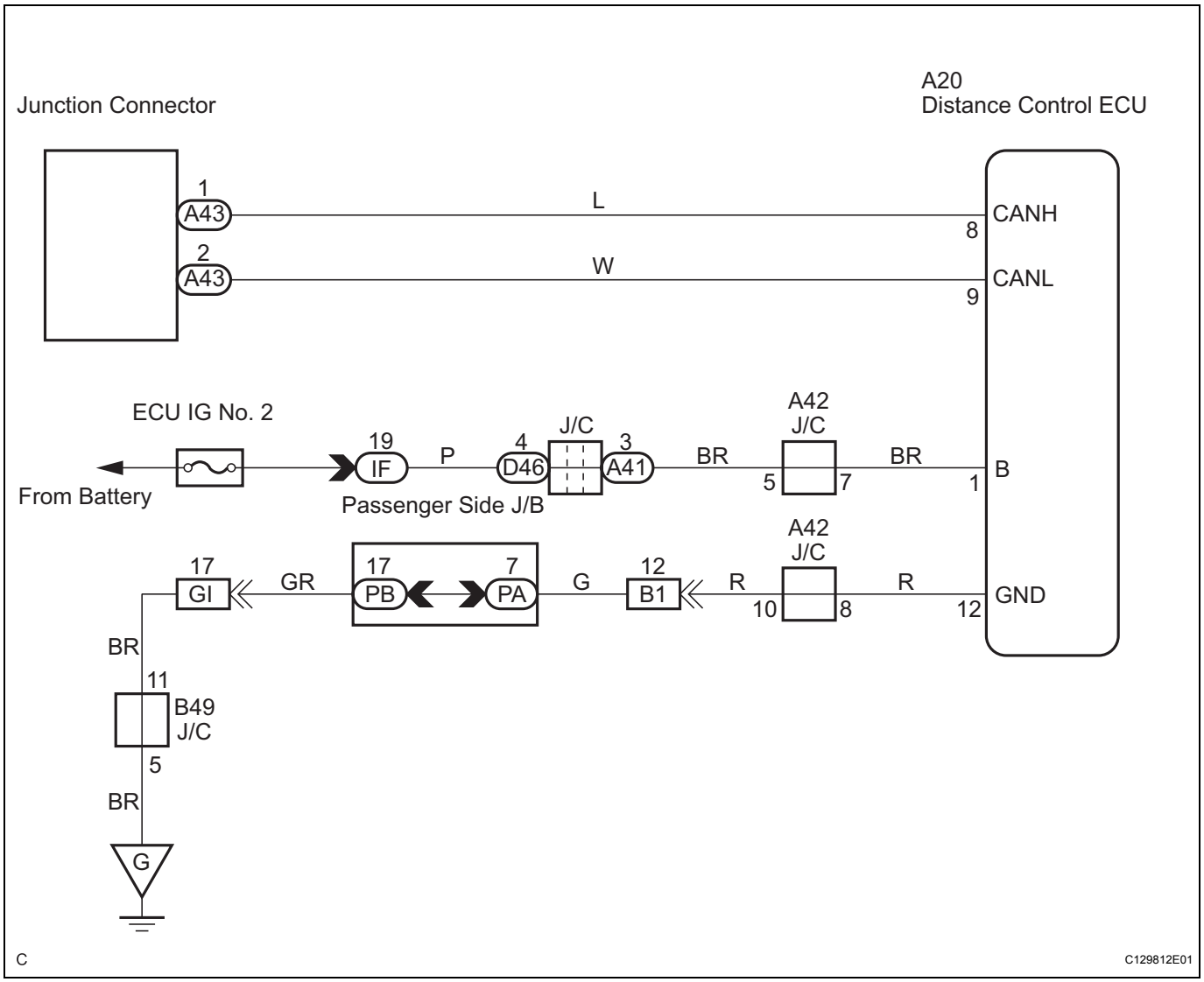

CA

INSPECTION PROCEDURE

1	CHECK CAN BUS LINE (DISTANCE CONTROL ECU SUB BUS LINE DISCONNECTION)

Distance Control ECU
Wire Harness View:

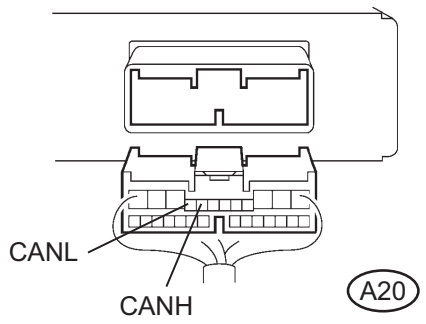

G030159E14

(a) Turn the ignition switch off.
(b) Disconnect the distance control ECU connector (A20).
(c) Measure the resistance according to the value(s) in the table below.

Resistance

Tester Connection	Condition	Specified Condition
A20-8 (CANH) - A20-9 (CANL)	Ignition switch off	54 to 69 Ω

NG → **REPAIR OR REPLACE DISTANCE CONTROL ECU BRANCH LINE OR CONNECTOR (CAN-H, CAN-L)**

OK

2	CHECK WIRE HARNESS (B, GND)

Distance Control ECU
Wire Harness View:

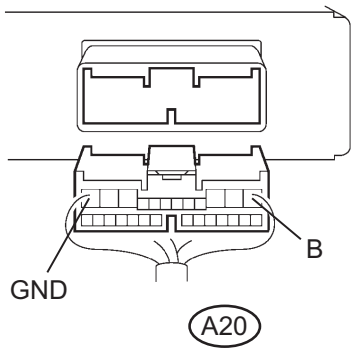

G030160E02

(a) Measure the resistance and voltage according to the value(s) in the table below.

Resistance and voltage

Tester Connection	Condition	Specified Condition
A20-12 (GND) - Body ground	Always	Below 1 Ω
A20-1 (B) - Body ground	Ignition switch on (IG)	10 to 14 V

NG → **REPAIR OR REPLACE HARNESS OR CONNECTOR**

OK

REPAIR OR REPLACE DISTANCE CONTROL ECU

Gateway ECU Communication Stop Mode

DESCRIPTION

Detection Item	Symptom	Trouble Area
GATEWAY ECU COMMUNICATION STOP MODE	• "BODY / GATEWAY" is not displayed on the "BUS CHECK" screen of the intelligent tester. • Applies to "GATEWAY ECU COMMUNICATION STOP MODE" in the "DTC COMBINATION TABLE".	• Power source or inside the gateway ECU • Gateway ECU sub bus line or connector

WIRING DIAGRAM

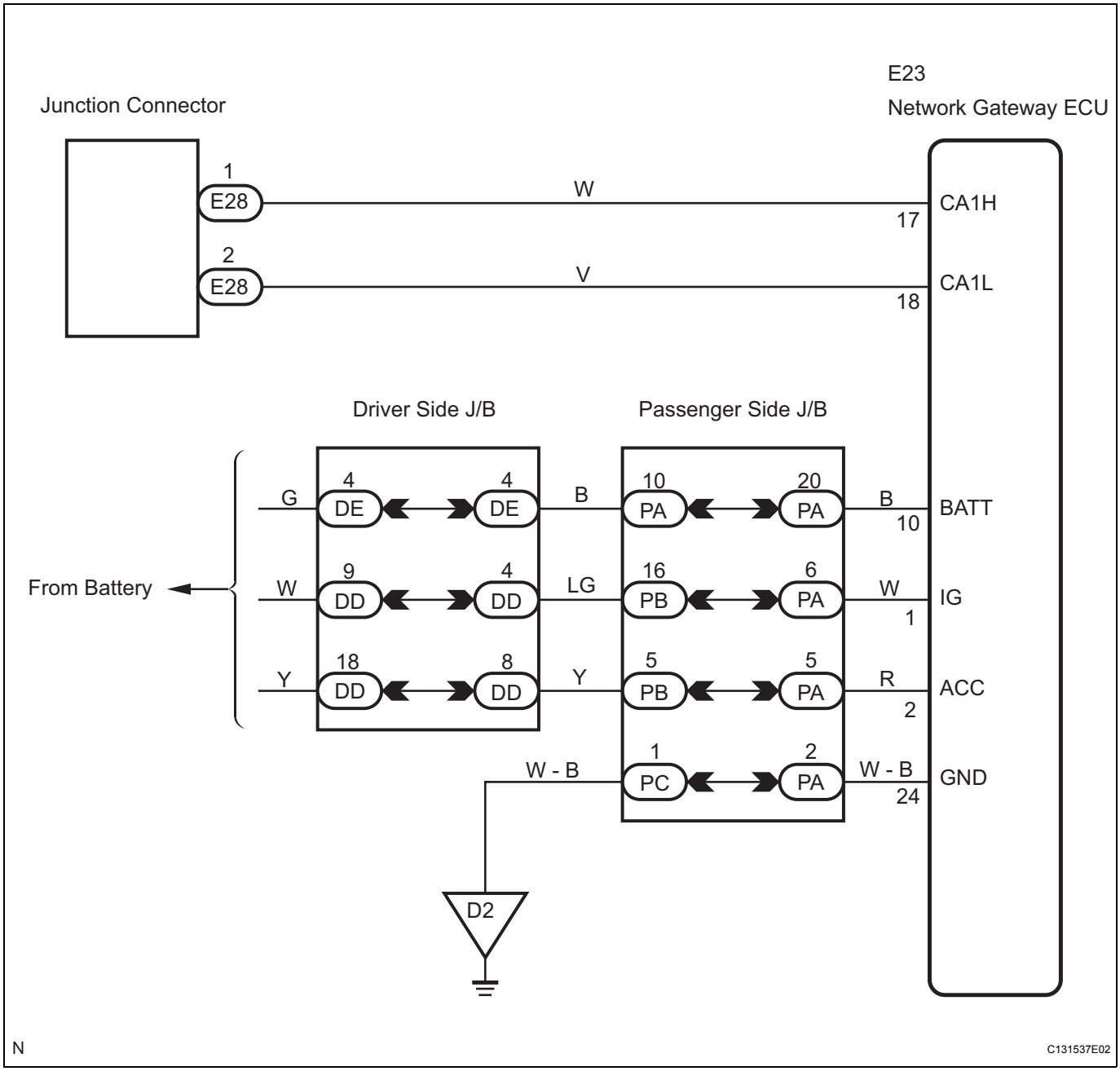

CA

INSPECTION PROCEDURE

1 CHECK CAN BUS LINE (GATEWAY ECU SUB BUS LINE DISCONNECTION)

Gateway ECU Wire Harness View:

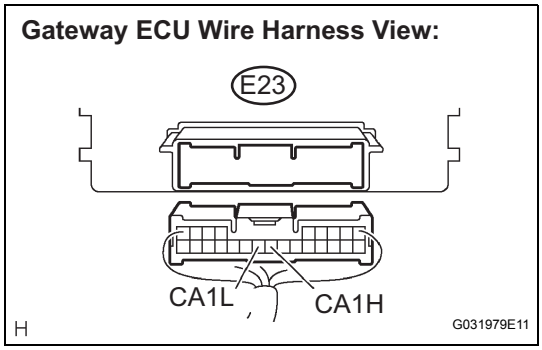

(a) Turn the ignition switch off.
(b) Disconnect the gateway ECU connector (E23).
(c) Measure the resistance according to the value(s) in the table below.

Resistance

Tester Connection	Condition	Specified Condition
E23-17 (CA1H) - E23-18 (CA1L)	Ignition switch off	54 to 69 Ω

NG → **REPAIR OR REPLACE GATEWAY ECU SUB BUS LINE OR CONNECTOR (CAN-H, CAN-L)**

OK

2 CHECK WIRE HARNESS (BATT, ACC, IG, GND)

Gateway ECU Wire Harness View:

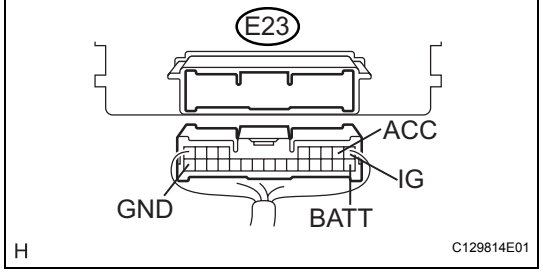

(a) Measure the resistance and voltage according to the value(s) in the table below.

Resistance and voltage

Tester Connection	Condition	Specified Condition
E23-24 (GND) - Body ground	Always	Below 1 Ω
E23-10 (BATT) - Body ground	Always	10 to 14 V
E23-2 (ACC) - Body ground	Ignition switch on (ACC)	10 to 14 V
E23-1 (IG) - Body ground	Ignition switch on (IG)	10 to 14 V

NG → **REPAIR OR REPLACE HARNESS OR CONNECTOR**

OK

REPLACE GATEWAY ECU

Steering Angle Sensor Communication Stop Mode

DESCRIPTION

Detection Item	Symptom	Trouble Area
STEERING SENSOR COMMUNICATION STOP MODE	• "STEERING SENSOR" is not displayed on the "BUS CHECK" screen of the intelligent tester. • Applies to "STEERING SENSOR COMMUNICATION STOP MODE" in the "DTC COMBINATION TABLE".	• Power source or inside the steering sensor • Steering sensor sub bus line or connector

WIRING DIAGRAM

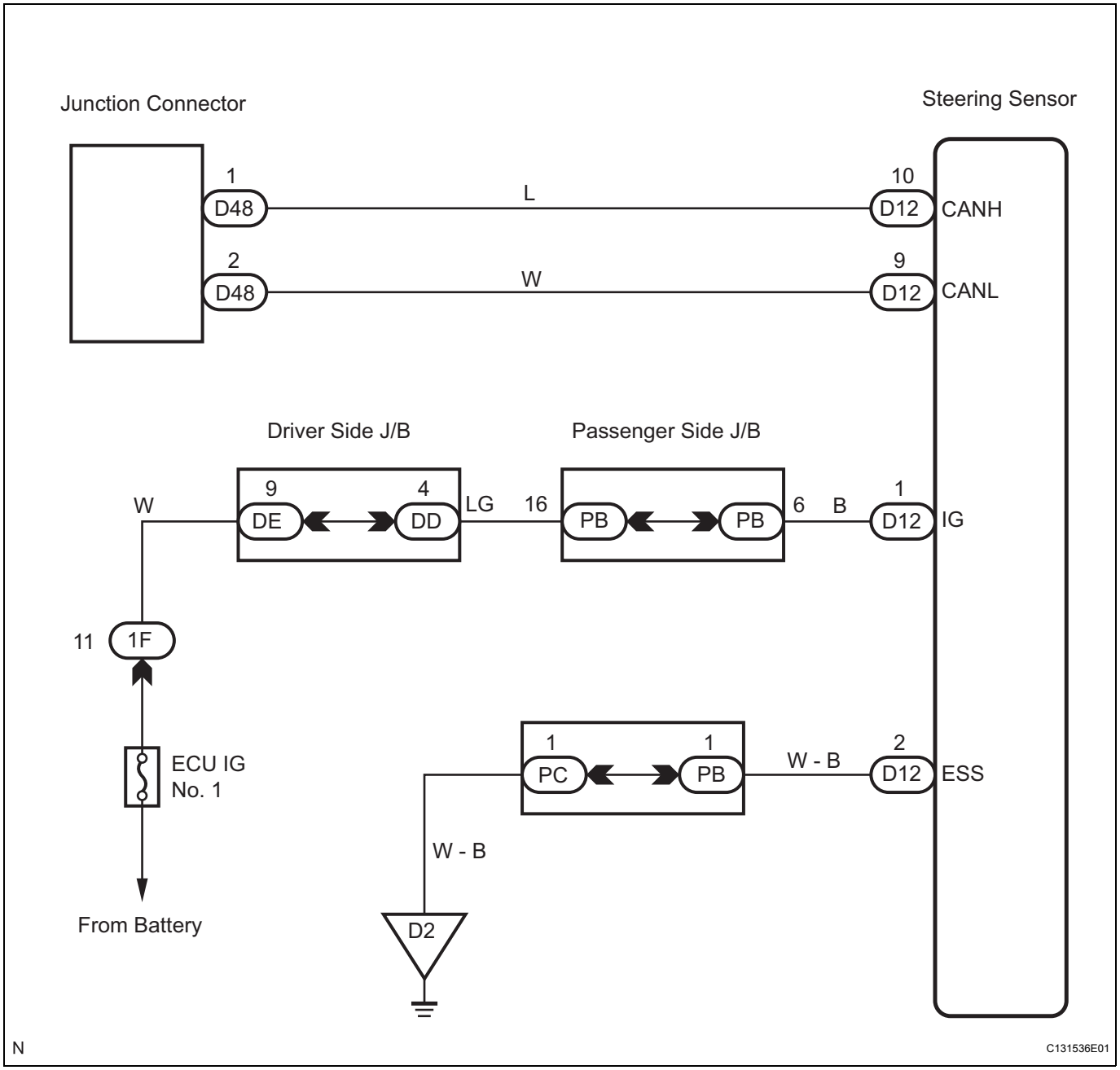

CA

INSPECTION PROCEDURE

1	CHECK CAN BUS LINE (STEERING SENSOR SUB BUS LINE DISCONNECTION)

Steering Sensor
Wire Harness View:

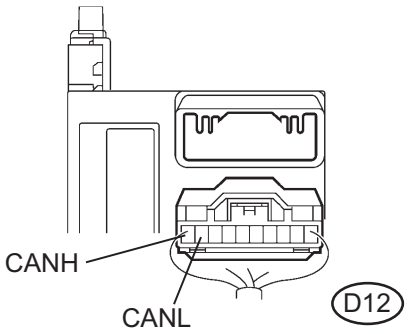

G030155E33

(a) Turn the ignition switch off.
(b) Disconnect the steering sensor connector (D12).
(c) Measure the resistance according to the value(s) in the table below.

Resistance

Tester Connection	Condition	Specified value
D12-10 (CANH) - D12-9 (CANL)	Ignition switch off	54 to 69 Ω

NG → **REPAIR OR REPLACE STEERING SENSOR SUB BUS LINE OR CONNECTOR (CAN-H, CAN-L)**

OK

2	CHECK WIRE HARNESS (IG1, ESS)

Steering Sensor
Wire Harness View:

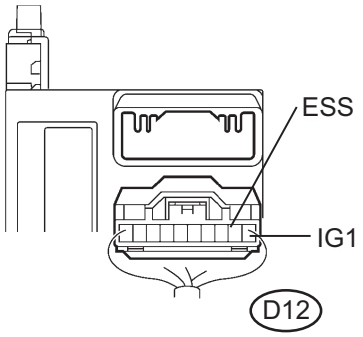

G030156E06

(a) Measure the resistance and voltage according to the value(s) in the table below.

Resistance and voltage

Tester Connection	Condition	Specified Condition
D12-2 (ESS) - Body ground	Always	Below 1 Ω
D12-1 (IG1) - Body ground	Ignition switch on (IG)	10 to 14 V

NG → **REPAIR OR REPLACE HARNESS OR CONNECTOR**

OK

REPLACE STEERING SENSOR

Yaw Rate Sensor Communication Stop Mode

DESCRIPTION

Detection Item	Symptom	Trouble Area
YAW RATE SENSOR COMMUNICATION STOP MODE	• "YAW / DECELERAT" is not displayed on the "BUS CHECK" screen of the intelligent tester. • Applies to "YAW RATE SENSOR COMMUNICATION STOP MODE" in the "DTC COMBINATION TABLE".	• Power source or inside the yaw rate sensor • Yaw rate sensor sub bus line or connector

WIRING DIAGRAM

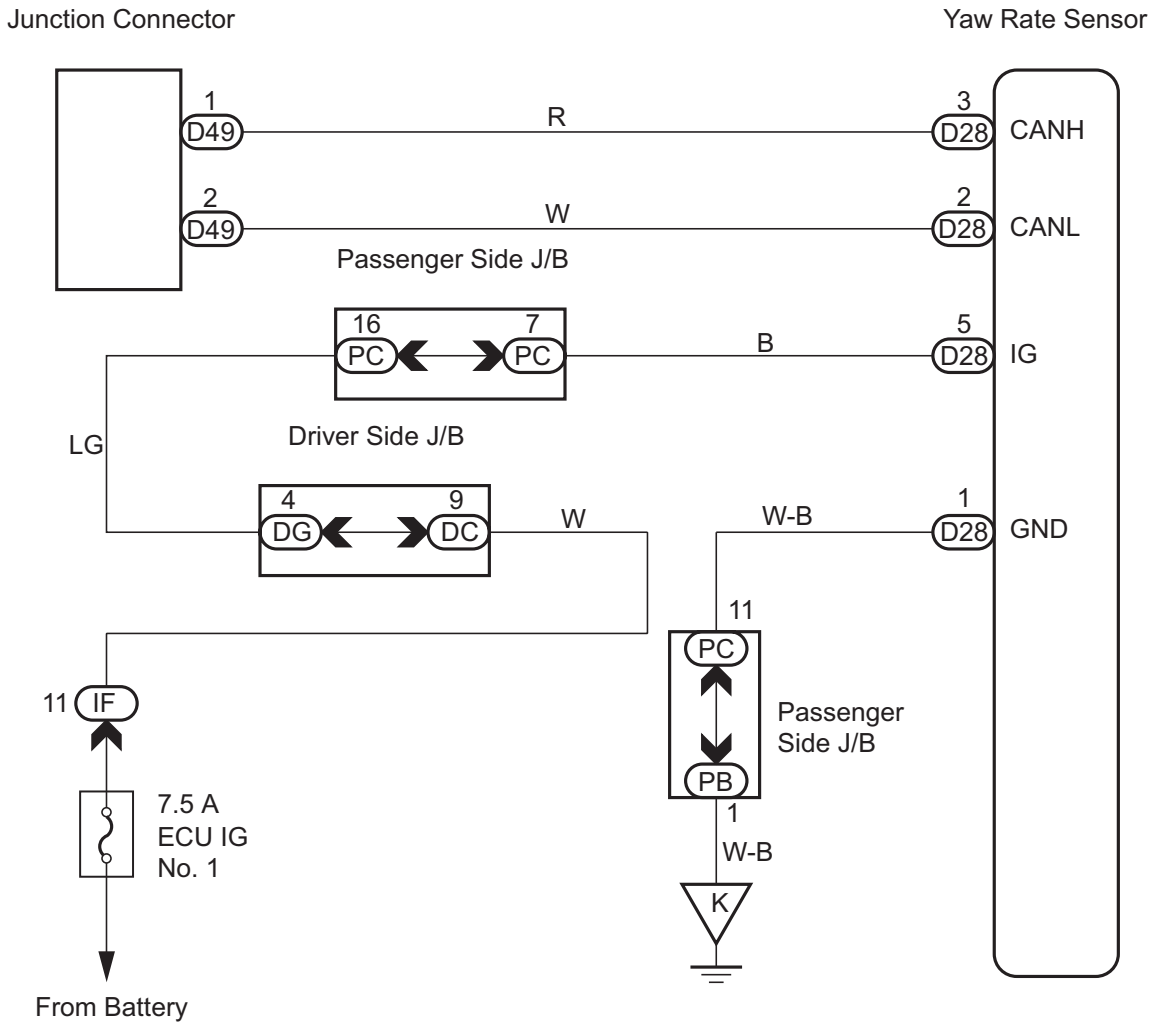

CA

INSPECTION PROCEDURE

1 **CHECK CAN BUS LINE (YAW RATE SENSOR SUB BUS LINE DISCONNECTION)**

Yaw Rate Sensor Connector Front View:

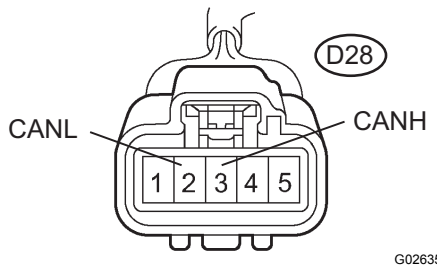

(a) Turn the ignition switch off.
(b) Disconnect the yaw rate sensor connector (D28).
(c) Measure the resistance according to the value(s) in the table below.

Resistance

Tester Connection	Condition	Specified value
D28-2 (CANL) - D28-3 (CANH)	Ignition switch off	54 to 69 Ω

NG → **REPAIR OR REPLACE YAW RATE SENSOR SUB BUS LINE OR CONNECTOR (CAN-H, CAN-L)**

OK

2 **CHECK WIRE HARNESS (IG, GND)**

Yaw Rate Sensor Connector Front View:

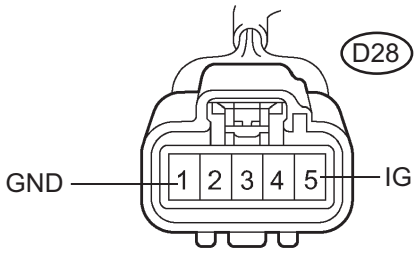

(a) Measure the resistance according to the value(s) in the table below.
(b) Measure the voltage according to the value(s) in the table below.

Resistance and voltage

Tester Connection	Condition	Specified Condition
D28-1 (GND) - Body ground	Always	Below 1 Ω
D28-5 (IG) - Body ground	Ignition switch on (IG)	10 to 14 V

NG → **REPAIR OR REPLACE HARNESS OR CONNECTOR**

OK

REPLACE YAW RATE SENSOR

ECM Communication Stop Mode

DESCRIPTION

Detection Item	Symptom	Trouble Area
ECM COMMUNICATION STOP MODE	• "ENGINE" and "ECT" are not displayed on the "BUS CHECK" screen of the intelligent tester. • Applies to "ECM COMMUNICATION STOP MODE" in the "DTC COMBINATION TABLE".	• Power source or inside the ECM • ECM main bus line or connector

WIRING DIAGRAM

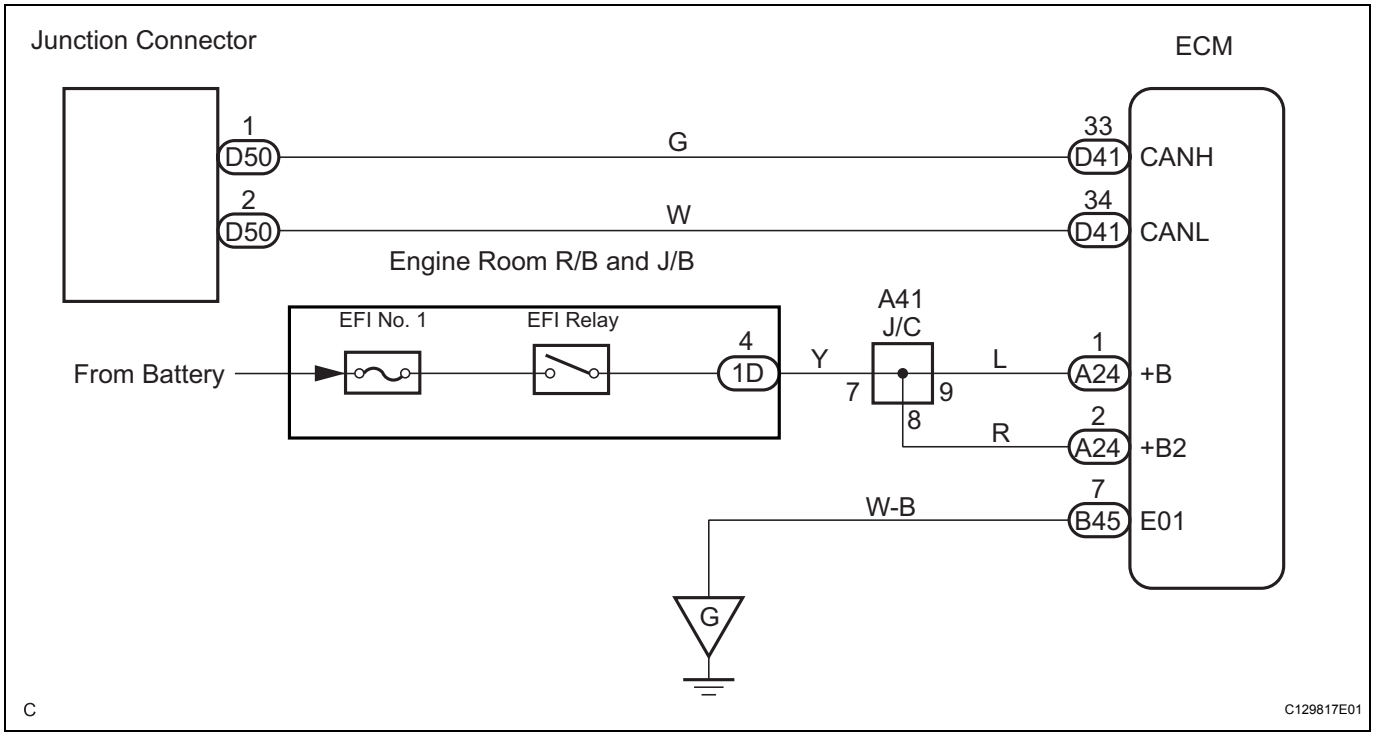

INSPECTION PROCEDURE

1	CHECK CAN BUS LINE (ECM MAIN BUS LINE DISCONNECTION)

ECM Wire Harness View:

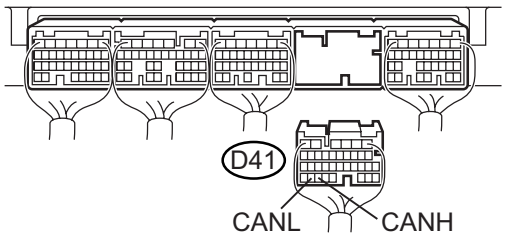

(a) Turn the ignition switch off.
(b) Disconnect the ECM connector (D41).
(c) Measure the resistance according to the value(s) in the table below.

Resistance

Tester Connection	Condition	Specified value
D41-33 (CANH) - D41-34 (CANL)	Ignition switch off	108 to 132 Ω

NG → **REPAIR OR REPLACE ECM MAIN BUS LINE OR CONNECTOR (CAN-H, CAN-L)**

OK

CA

2	CHECK WIRE HARNESS (+B1, +B, E1)

ECM Wire Harness View:

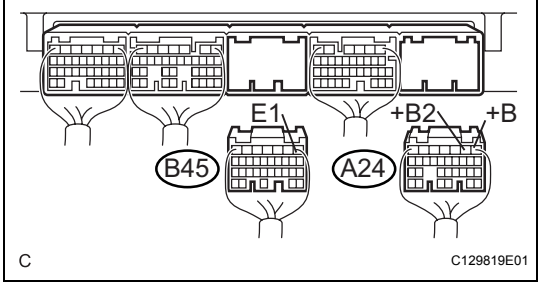

(a) Reconnect the ECM connector (D41).
(b) Disconnect the ECM connector (A24) (B45).
(c) Measure the resistance and voltage according to the value(s) in the table below.

Resistance and voltage

Tester Connection	Condition	Specified Condition
B45-1 (E1) - Body ground	Always	Below 1 Ω
A24-1 (+B) - Body ground	Ignition switch on (IG)	10 to 14 V
A24-2 (+B2) - Body ground	Ignition switch on (IG)	10 to 14 V

NG → **REPAIR OR REPLACE HARNESS OR CONNECTOR**

OK

REPLACE ECM

Can Main Bus Line for Disconnection

DESCRIPTION

There may be an open circuit in the CAN main bus line and/or the DLC3 sub bus line when the resistance between terminals 6 (CANH) and 14 (CANL) of the DLC3 is 69 Ω or more.

Symptom	Trouble Area
Resistance between terminals 6 (CANH) and 14 (CANL) of the DLC3 is 69 Ω or more.	• CAN main bus line or connector • Junction connector (CAN J/C) • DLC3 sub bus line or connector • ECM • Skid control ECU with VSC actuator • Skid control ECU with ABS actuator

WIRING DIAGRAM

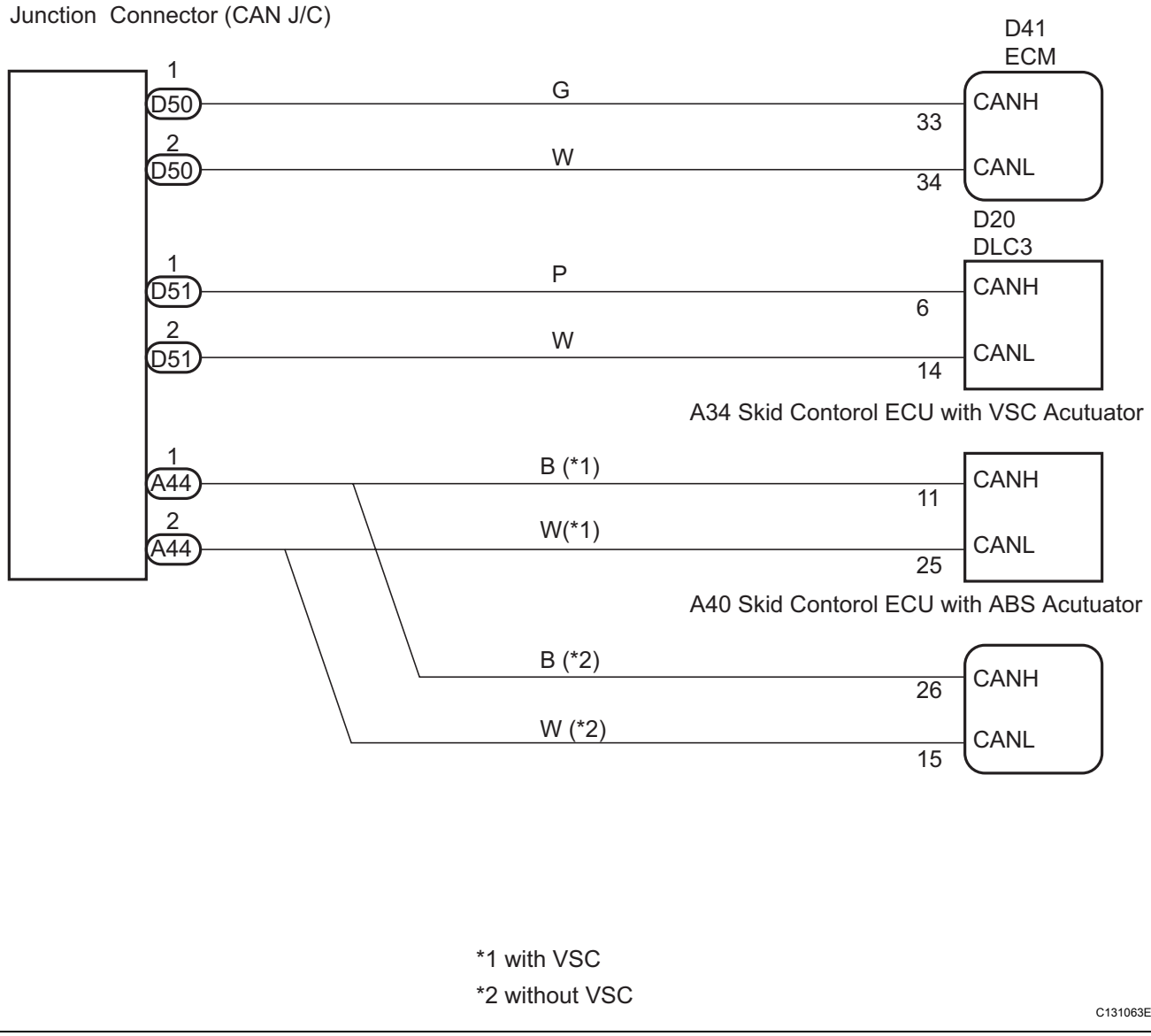

CA

INSPECTION PROCEDURE

1 CHECK DLC3

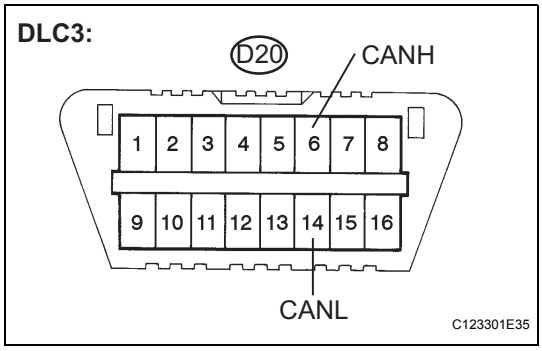

(a) Turn the ignition switch off.
(b) Measure the resistance according to the value(s) in the table below.

Result

Tester connection	Condition	Specified value	Result
D20-6 (CANH) - D20-14 (CANL)	ignition switch off	54 to 69 Ω	A
D20-6 (CANH) - D20-14 (CANL)	ignition switch off	69 Ω or more	B

NOTICE:
When the measured value is 69 Ω or more and a CAN communication system diagnostic trouble code is output, there may be a fault besides disconnection of the DLC3 sub bus line. For that reason, troubleshooting should be performed again from "HOW TO PROCEED WITH TROUBLESHOOTING" (See page CA-7) after repairing the trouble area.

B → **REPAIR OR REPLACE DLC3 SUB BUS LINE OR CONNECTOR (CAN-H, CAN-L)**

A

2 CHECK CAN MAIN BUS LINE FOR DISCONNECTION

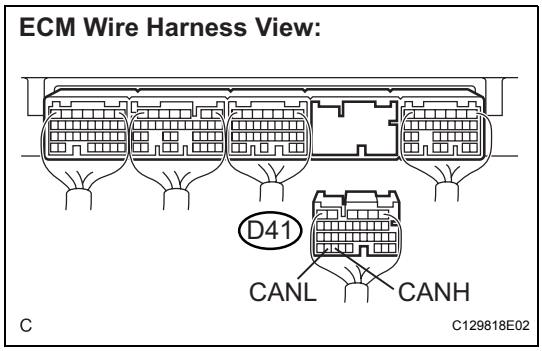

(a) Turn the ignition switch off.
(b) Disconnect the ECM connector (D41).
(c) Measure the resistance according to the value(s) in the table below.

Resistance

Tester Connection	Condition	Specified value
D41 -33 (CANH) - D41-34 (CANL)	Ignition switch off	108 to 132 Ω

OK → **REPLACE ECM**

NG

3 CONNECT CONNECTOR

(a) Reconnect the ECM connector (D41) to the ECM.

NEXT

CA

4	CHECK CAN MAIN BUS LINE FOR DISCONNECTION

CAN J/C Side (with Earth Terminal) Wire Harness View:

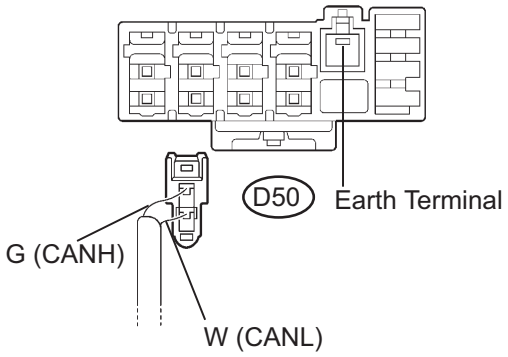

G031957E07

(a) Disconnect the CAN main bus line connector (D50) from the CAN J/C A side (w/ earth terminal).
NOTICE:
- **Before disconnecting the connector, make a note of where it is connected.**
- **Reconnect the connector to its original position.**

(b) Measure the resistance according to the value(s) in the table below.
Resistance

Tester Connection	Condition	Specified value
D50-1 (CANH) - D50-2 (CANL)	Ignition switch off	108 to 132 Ω

NG → **REPAIR OR REPLACE CAN MAIN BUS LINE OR CONNECTOR (D50-D41)**

OK

5	CONNECT CONNECTOR

(a) Reconnect the CAN main bus line connector (D50) to the CAN J/C Aside (without earth terminal).

NEXT

6	CHECK CAN MAIN BUS LINE FOR DISCONNECTION (CAN J/C)

Skid Control ECU Connector Front View:

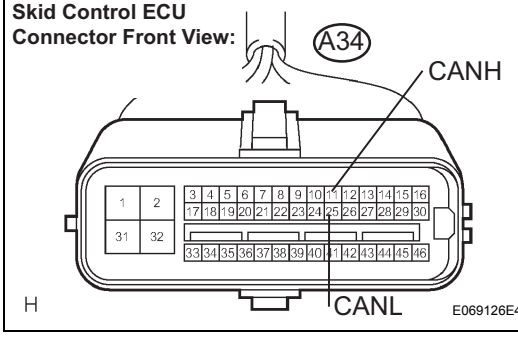

E069126E49

NOTICE:
For vehicles without VSC, go to step 7

(a) Turn the ignition switch off.
(b) Disconnect the skid control ECU connector (A34).
(c) Measure the resistance according to the value(s) in the table below.
Resistance

Tester Connection	Condition	Specified value
A34-11 (CANH) - A34-25 (CANL)	Ignition switch off	108 to 132 Ω

NG → **Go to step 8**

OK

REPLACE SKID CONTROL ECU WITH ACTUATOR

CA

7	CHECK CAN MAIN BUS LINE FOR DISCONNECTION

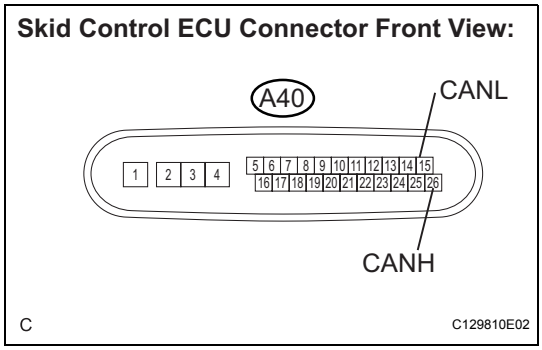

(a) Turn the ignition switch off.
(b) Disconnect the skid control ECU connector (A40).
(c) Measure the resistance according to the value(s) in the table below.
Resistance

Tester Connection	Condition	Specified value
A40-26 (CANH) - A40-15(CANL)	Ignition switch off	108 to 132 Ω

OK → **REPLACE SKID CONTROL ECU WITH ACTUATOR**

NG

8	CONNECT CONNECTOR

(a) Reconnect the skid control ECU connector (A34) or (A40) to the skid control ECU.

NEXT

9	CHECK CAN MAIN BUS LINE FOR DISCONNECTION

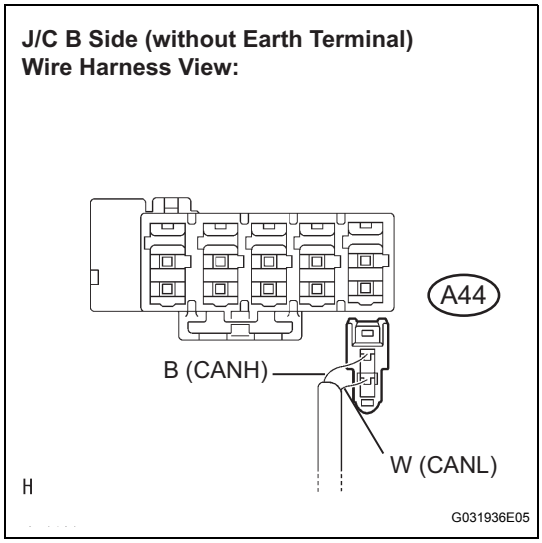

(a) Disconnect the CAN main bus line connector (A44) from the J/C B side (w/o earth terminal).
NOTICE:
- **Before disconnecting the connector, make a note of where it is connected.**
- **Reconnect the connector to its original position.**

(b) Measure the resistance according to the value(s) in the table below.
Resistance

Tester Connection	Condition	Specified value
A44-1 (CANH) - A44-2 (CANL)	Ignition switch off	108 to 132 Ω

NG → **REPAIR OR REPLACE CAN MAIN BUS LINE OR CONNECTOR (D44-A34(A40))**

CA

OK

REPLACE JUNCTION CONNECTOR

Check CAN Bus Line

DESCRIPTION

When any DTC for the CAN communication system is output, first measure the resistance between the terminals of the DLC3 to specify the trouble area, and the check that there is no short in the CAN main bus line, between the CAN bus lines, to +B or to GND.

WIRING DIAGRAM

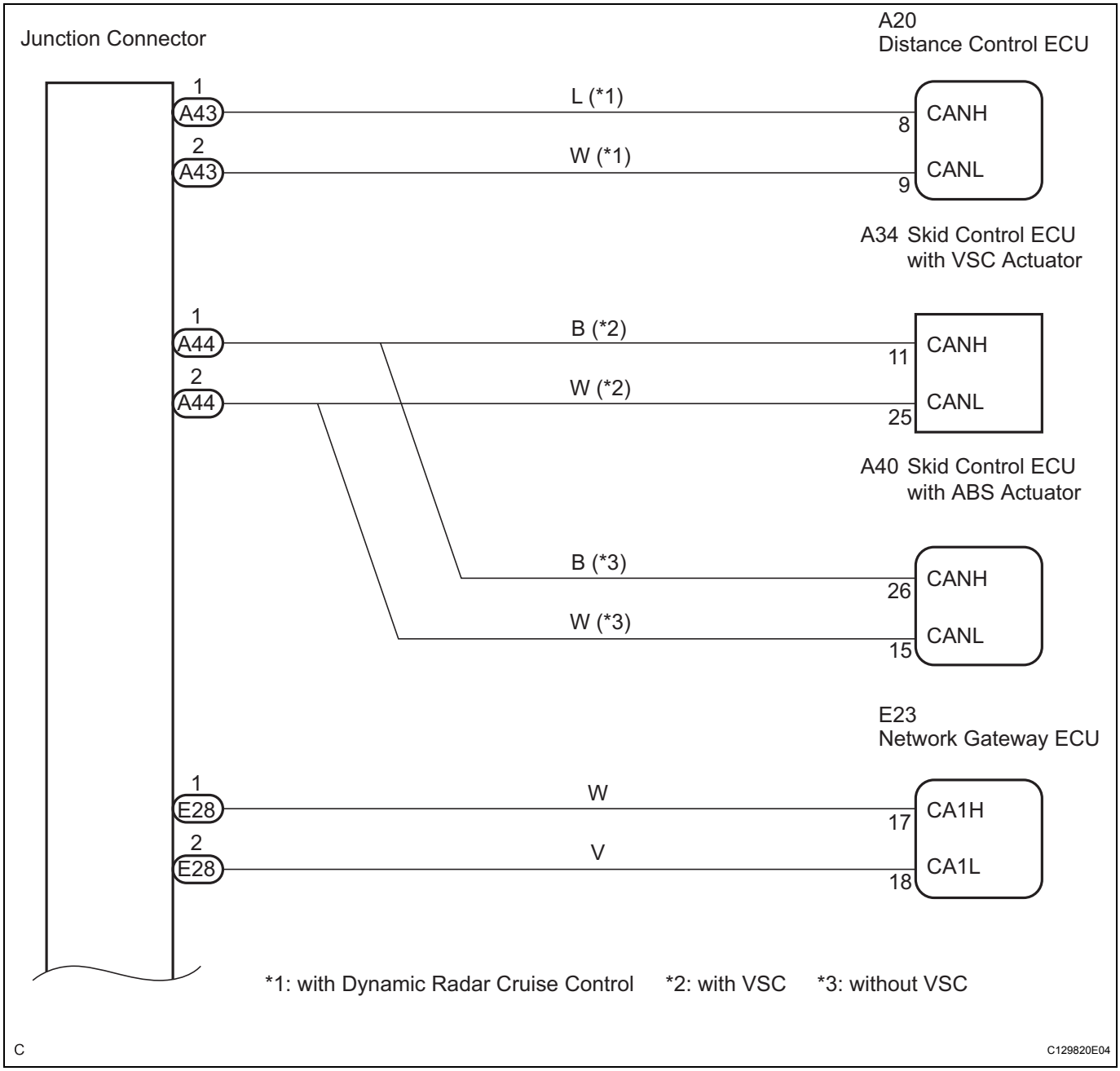

CA

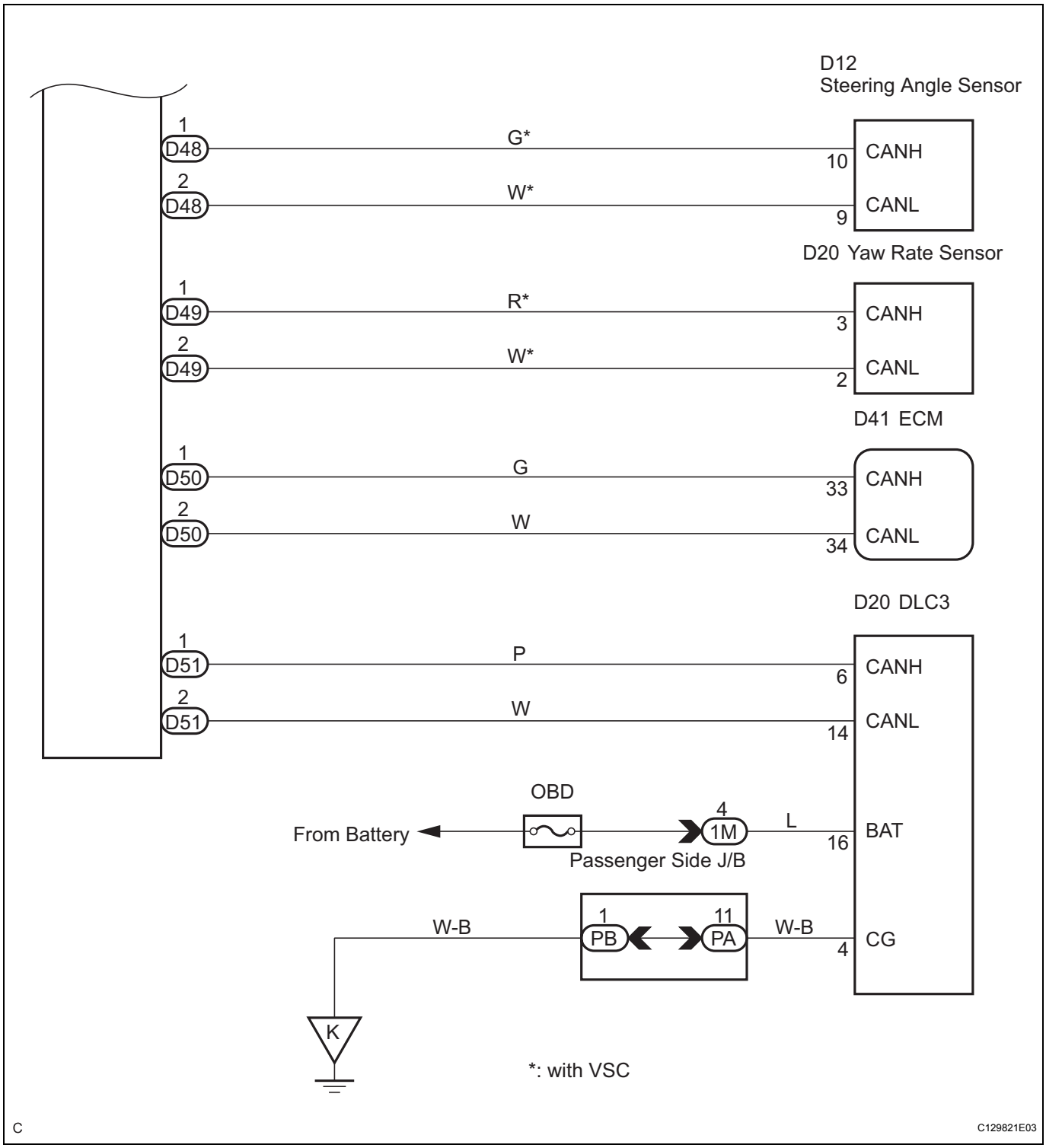
D12
Steering Angle Sensor
1
D48
G*
10
CANH
2
D48
W*
9
CANL
D20 Yaw Rate Sensor
1
D49
R*
3
CANH
2
D49
W*
2
CANL
D41 ECM
1
D50
G
33
CANH
2
D50
W
34
CANL
D20 DLC3
1
D51
P
6
CANH
2
D51
W
14
CANL
OBD
From Battery
4
1M
L
16
BAT
Passenger Side J/B
W-B
1
PB
11
PA
W-B
4
CG
K
*: with VSC
C
C129821E03

INSPECTION PROCEDURE

1	CHECK CAN BUS LINE (MAIN BUS LINE FOR DISCONNECTION, BUS LINES FOR SHORT CIRCUIT)

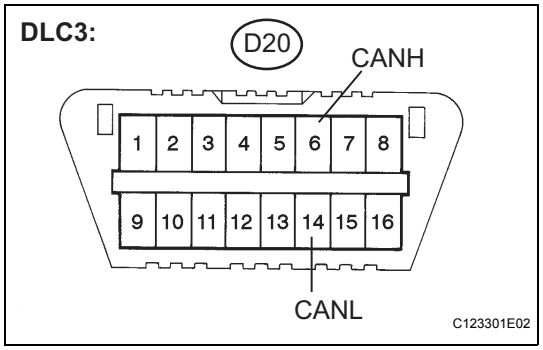

(a) Turn the ignition switch off.
(b) Measure the resistance according to the value(s) in the table below.

Resistance

Tester Connection	Condition	Specified value	Result
D20-6 (CANH) - D20-14 (CANL)	Ignition switch off	54 to 69 Ω	OK
D20-6 (CANH) - D20-14 (CANL)	Ignition switch off	69 Ω or more	NG-A
D20-6 (CANH) - D20-14 (CANL)	Ignition switch off	54 Ω or less	NG-B

NG-A → **CHECK CAN MAIN BUS LINE (DISCONNECTION)**

NG-B → **CHECK CAN BUS LINE (SHORT CIRCUIT)**

OK

2	CHECK CAN BUS LINE (SHORT TO +B)

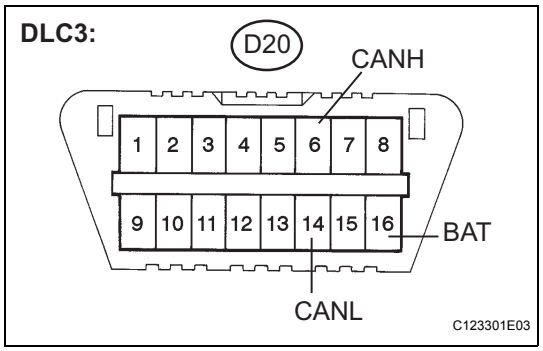

(a) Measure the resistance according to the value(s) in the table below.

Resistance

Tester Connection	Condition	Specified value
D20-6 (CANH) - D20-16 (BAT)	Ignition switch off	1 MΩ or more
D20-14 (CANL) - D20-16 (BAT)	Ignition switch off	1 MΩ or more

NG → **CHECK CAN BUS LINE (SHORT TO +B)**

OK

CA

3	CHECK CAN BUS LINE (SHORT TO GND)

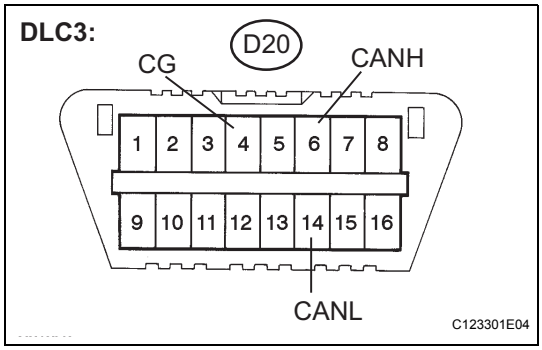

(a) Measure the resistance according to the value(s) in the table below.

Resistance

Tester Connection	Condition	Specified value
D20-4 (CG) - D20-6 (CANH)	Ignition switch off	1 kΩ or more
D20-4 (CG) - D20-14 (CANL)	Ignition switch off	1 kΩ or more

NG → CHECK CAN BUS LINE (SHORT TO GND)

OK

HOW TO PROCEED WITH TROUBLESHOOTING

Check CAN Bus Lines for Short Circuit

DESCRIPTION

There may be a short circuit between the CAN bus lines when the resistance between terminals 6 (CANH) and 14 (CANL) of the DLC3 is below 54 Ω.

Symptom	Trouble Area
Resistance between terminals 6 (CANH) and (CANL) of the DLC 3 is below 54 Ω	• Short between CAN bus lines • Distance control ECU • Skid control ECU with VSC actuator • Skid control ECU with ABS actuator • Steering sensor • Yaw rate sensor • ECM • Network gateway ECU • Junction connector (CAN J/C)

WIRING DIAGRAM

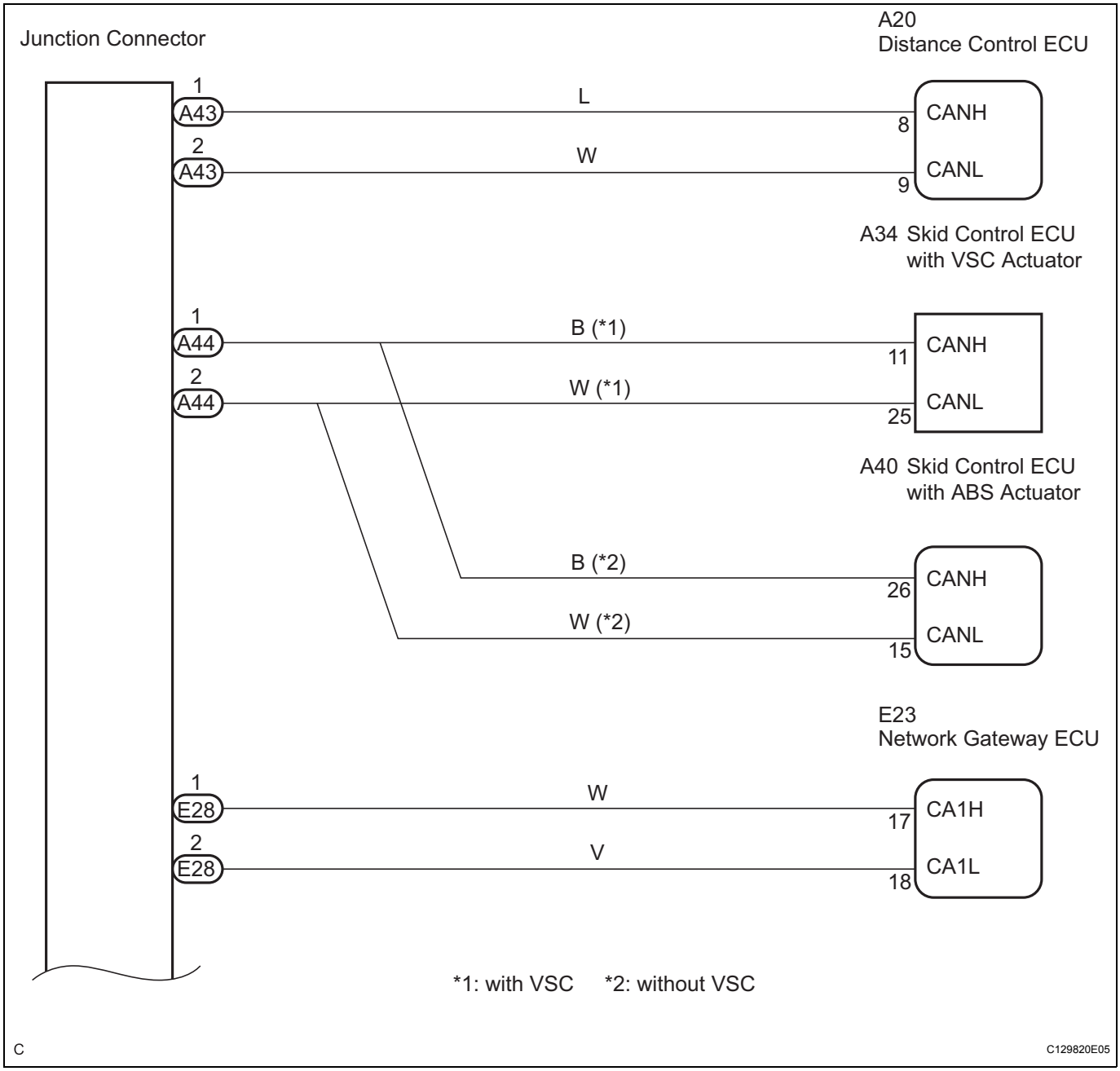

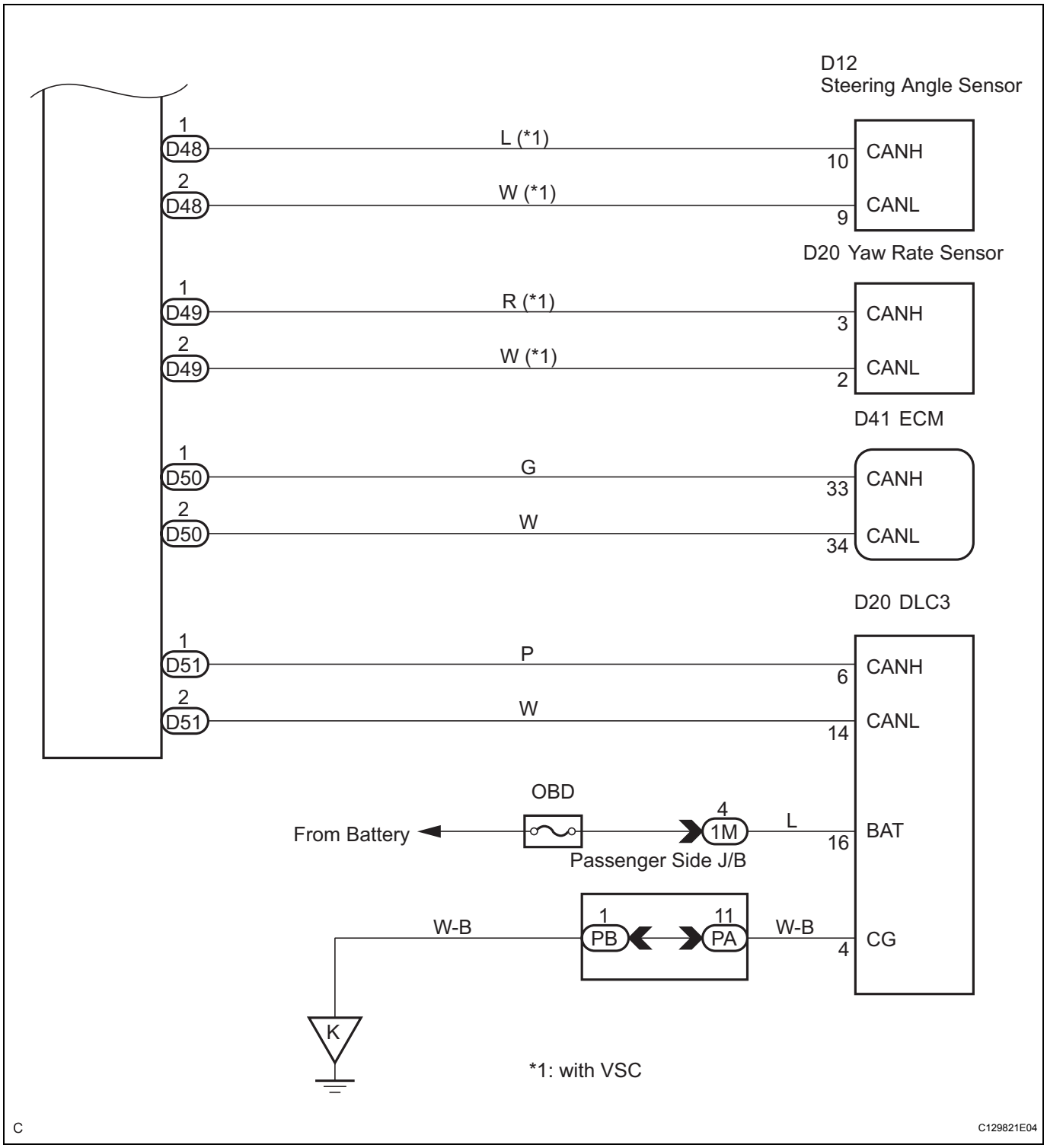
D12
Steering Angle Sensor
1
D48
L (*1)
10
CANH
2
D48
W (*1)
9
CANL
D20 Yaw Rate Sensor
1
D49
R (*1)
3
CANH
2
D49
W (*1)
2
CANL
D41 ECM
1
D50
G
33
CANH
2
D50
W
34
CANL
D20 DLC3
1
D51
P
6
CANH
2
D51
W
14
CANL
OBD
From Battery
4
1M
L
16
BAT
Passenger Side J/B
1
PB
11
PA
W-B
W-B
4
CG
K
*1: with VSC
C
C129821E04

CA

INSPECTION PROCEDURE

1	CHECK CAN BUS LINE (DLC3 SUB BUS LINE)

CAN J/C A Side (w/ Earth Terminal) Wire Harness View:

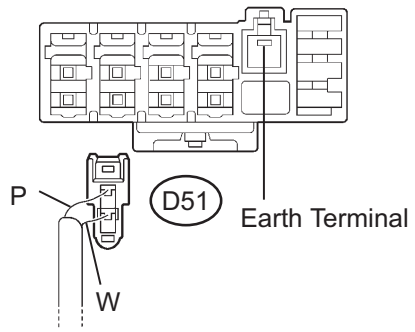

G031933E26

(a) Turn the ignition switch off.
(b) Disconnect the DLC3 sub bus line connector (D51) from the CAN J/C A side (w/ earth terminal).
NOTICE:
- **Before disconnecting the connector, make a note of where it is connected.**
- **Reconnect the connector to its original position.**

DLC3:

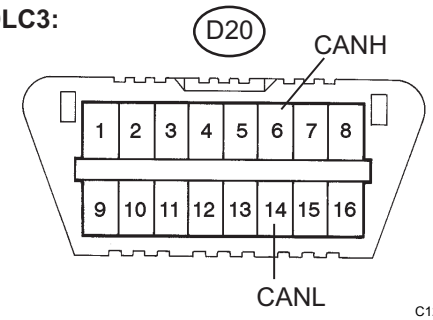

C123301E07

(c) Measure the resistance according to the value(s) in the table below.
Resistance

Tester Connection	Condition	Specified value
D20-6 (CANH) - D20-14 (CANL)	Ignition switch off	1 MΩ or more

NG → **REPAIR OR REPLACE DLC3 SUB BUS LINE OR CONNECTOR (CAN-H, CAN-L)**

OK

2	CONNECT CONNECTOR

(a) Reconnect the DLC3 sub bus line connector (D51) to the CAN J/C A side (w/ earth terminal).

NEXT

3	CHECK CAN BUS LINE (GATEWAY ECU)

CAN J/C B side (w/o Earth Terminal) Wire Harness View:

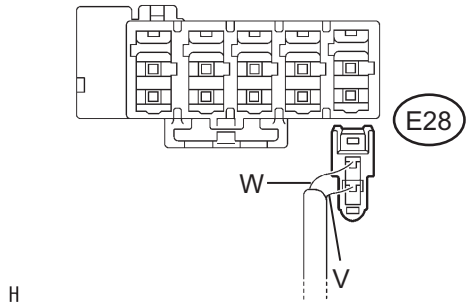

(a) Disconnect the gateway ECU sub bus line connector (E28) from the CAN J/C B side (w/o earth terminal).
NOTICE:
- **Before disconnecting the connector, make a note of where it is connected.**
- **Reconnect the connector to its original position.**

DLC3:

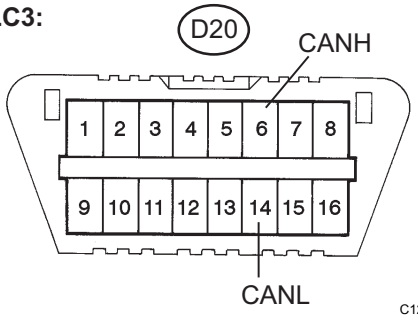

(b) Measure the resistance according to the value(s) in the table below.
Resistance

Tester Connection	Condition	Specified value
D20-6 (CANH) - D20-14 (CANL)	Ignition switch off	54 to 69 Ω

OK → **Go to step 10**

NG

4	CONNECT CONNECTOR

(a) Reconnect the gateway ECU sub bus line connector (E28) to the CAN J/C B side (w/o earth terminal).

NEXT

CA

5	CHECK CAN BUS LINE (ECM MAIN BUS LINE)

CAN J/C A Side (w/ Earth Terminal) Wire Harness View:

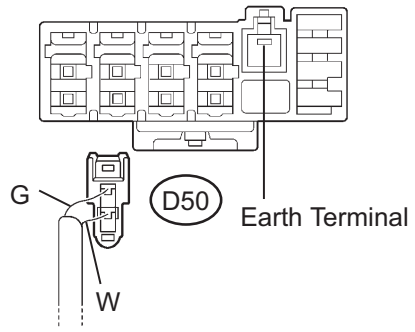

G031933E27

(a) Disconnect the ECM main bus line connector (D50) from the CAN J/C A side (w/ earth terminal).
NOTICE:
- **Before disconnecting the connector, make a note of where it is connected.**
- **Reconnect the connector to its original position.**

DLC3:

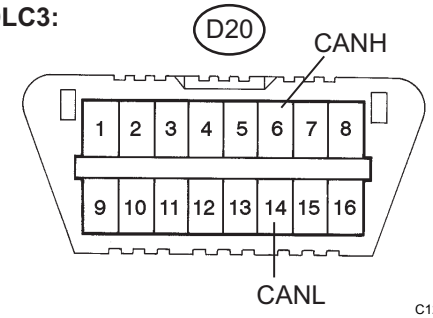

C123301E07

(b) Measure the resistance according to the value(s) in the table below.
Resistance

Tester Connection	Condition	Specified value
D20-6 (CANH) - D20-14 (CANL)	Ignition switch off	108 to 132 Ω

OK → **Go to step 12**

NG

6	CONNECT CONNECTOR

(a) Reconnect the ECM main bus line connector (D50) to the CAN J/C A side (w/ earth terminal).

NEXT

7	CHECK CAN BUS LINE (DISTANCE CONTROL ECU SUB BUS LINE)

NOTICE:
For vehicles without dynamic radar / laser cruise control, go to step 15.

CA

CAN J/C B Side (w/o Earth Terminal) Wire Harness View:

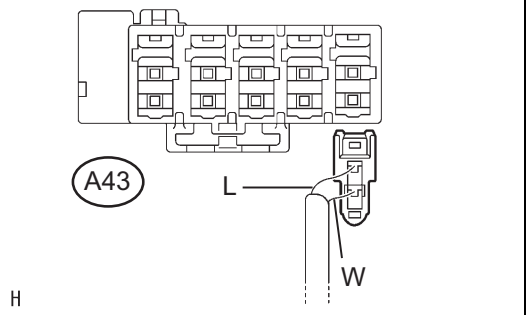

(a) Disconnect the distance control ECU sub bus line connector (A43) from the CAN J/C B side (w/o earth terminal).
NOTICE:
- **Before disconnecting the connector, make a note of where it is connected.**
- **Reconnect the connector to its original position.**

DLC3:

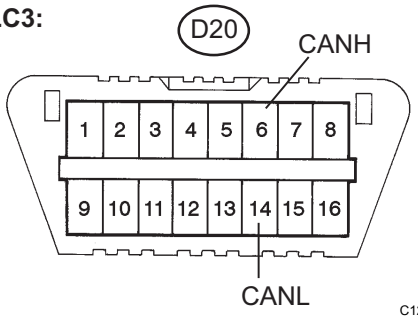

(b) Measure the resistance according to the value(s) in the table below.
Resistance

Tester Connection	Condition	Specified value
D20-6 (CANH) - D20-14 (CANL)	Ignition switch off	54 to 69 Ω

NG → **Go to step 14**

OK

8 CONNECT CONNECTOR

(a) Reconnect the distance control ECU sub bus line connector (A43) to the CAN J/C B side (w/o earth terminal).

NEXT

9 CHECK CAN BUS LINE (DISTANCE CONTROL ECU SUB BUS LINE)

DLC3:

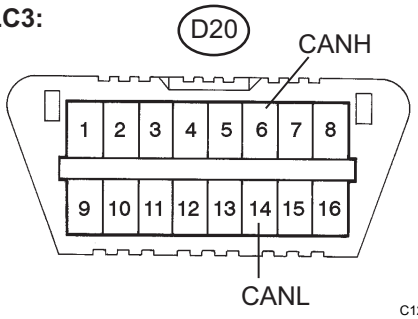

(a) Disconnect the distance control ECU connector (A20).
(b) Measure the resistance according to the value(s) in the table below.
Resistance

Tester Connection	Condition	Specified value
D20-6 (CANH) - D20-14 (CANL)	Ignition switch off	54 to 69 Ω

OK → **REPLACE DISTANCE CONTROL ECU**

CA

NG

REPAIR OR REPLACE DISTANCE CONTROL ECU BRANCH LINE OR CONNECTOR (CAN-H, CAN-L)

10	CONNECT CONNECTOR

(a) Reconnect the network gateway ECU sub bus line connector (B28) to the CAN J/C B side (w/o earth terminal).

NEXT

11	CHECK CAN BUS LINE (GATEWAY ECU SUB BUS LINE)

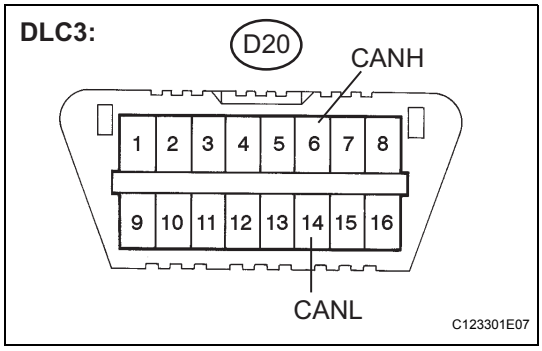

(a) Disconnect the gateway ECU connector (E23).
(b) Measure the resistance according to the value(s) in the table below.

Resistance

Tester Connection	Condition	Specified value
D20-6 (CANH) - D20-14 (CANL)	Ignition switch off	54 to 69 Ω

OK → **REPLACE GATEWAY ECU**

NG

REPAIR OR REPLACE GATEWAY ECU SUB BUS LINE OR CONNECTOR (CAN-H, CAN-L)

12	CONNECT CONNECTOR

(a) Reconnect the ECM main bus line connector (D50) to the CAN J/C A side (w/ earth terminal).

NEXT

13	CHECK CAN BUS LINE (ECU MAIN BUS LINE)

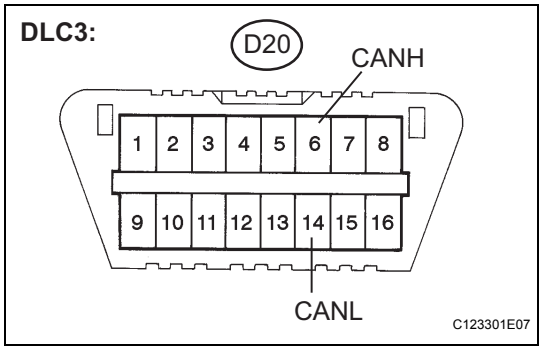

(a) Disconnect the ECM connector (D41).
(b) Measure the resistance according to the value(s) in the table below.

Resistance

Tester Connection	Condition	Specified value
D20-6 (CANH) - D20-14 (CANL)	Ignition switch off	108 to 132 Ω

OK → REPLACE ECM

NG

REPAIR OR REPLACE ECM MAIN BUS LINE OR CONNECTOR (CAN-H, CAN-L)

14	CONNECT CONNECTOR

(a) Reconnect the distance control ECU sub bus line connector (A43) to the CAN J/C B side (w/o earth terminal).

NEXT

15	CHECK CAN BUS LINE (YAW RATE SENSOR SUB BUS LINE)

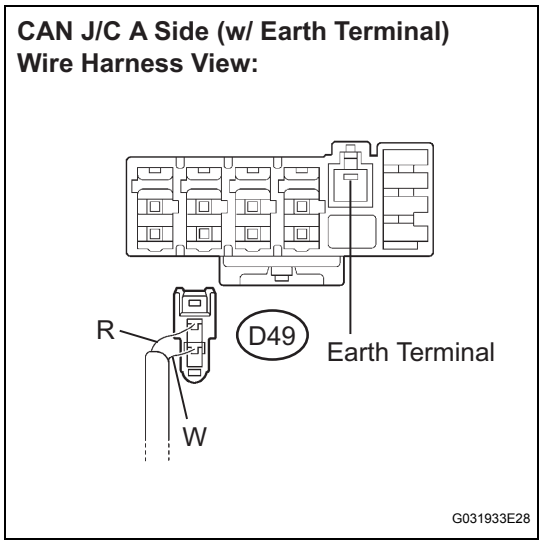

(a) Disconnect the yaw rate sensor sub bus line connector (D49) from the CAN J/C A side (w/ earth terminal).

NOTICE:

- **Before disconnecting the connector, make a note of where it is connected.**
- **Reconnect the connector to its original position.**

CA

DLC3:

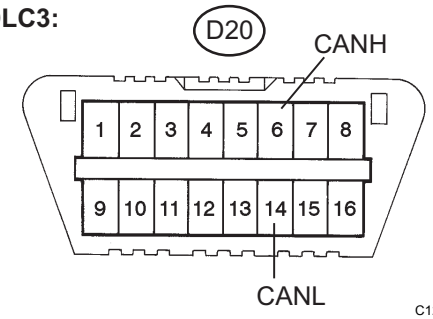

(b) Measure the resistance according to the value(s) in the table below.

Resistance

Tester Connection	Condition	Specified value
D20-6 (CANH) - D20-14 (CANL)	Ignition switch off	54 to 69 Ω

OK → **Go to step 22**

NG

16 CONNECT CONNECTOR

(a) Reconnect the yaw rate sensor sub bus line connector (D28) to the CAN J/C A side (w/ earth terminal).

NEXT

17 CHECK CAN BUS LINE (STEERING SENSOR SUB BUS LINE)

CAN J/C A Side (w/ Earth Terminal) Wire Harness View:

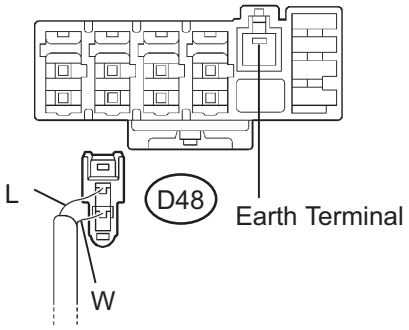

(a) Disconnect the steering sensor sub bus line connector (D48) from the CAN J/C A side (w/ earth terminal).

NOTICE:

- **Before disconnecting the connector, make a note of where it is connected.**
- **Reconnect the connector to its original position.**

DLC3:

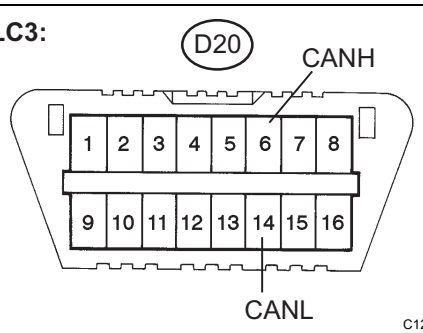

(b) Measure the resistance according to the value(s) in the table below.

Resistance

Tester Connection	Condition	Specified value
D20-6 (CANH) - D20-14 (CANL)	Ignition switch off	54 to 69 Ω

OK → **Go to step 24**

NG

CA

18	CONNECT CONNECTOR

(a) Reconnect the steering sensor sub bus line connector (D48) to the CAN J/C A side (w/ earth terminal).

NEXT

19	CHECK CAN BUS LINE (SKID CONTROL ECU WITH ACTUATOR MAIN BUS LINE)

CAN J/C B side (w/o Earth Terminal) Wire Harness View:

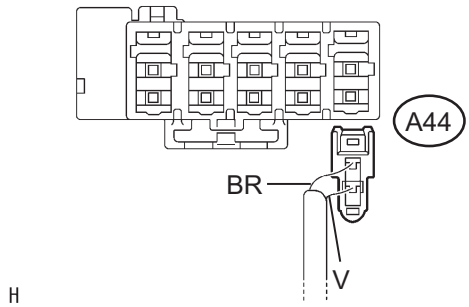

(a) Disconnect the skid control ECU main bus line connector (A44) from the CAN J/C B side (w/o earth terminal).
NOTICE:
- **Before disconnecting the connector, make a note of where it is connected.**
- **Reconnect the connector to its original position.**

DLC3:

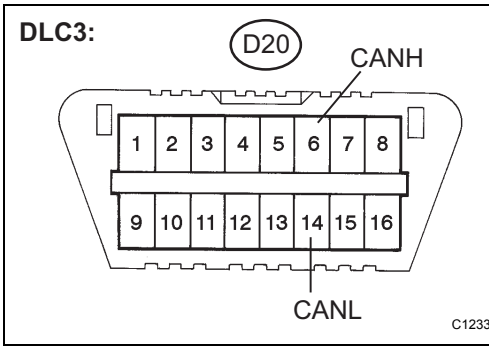

(b) Measure the resistance according to the value(s) in the table below.
Resistance

Tester Connection	Condition	Specified value
D20-6 (CANH) - D20-14 (CANL)	Ignition switch off	54 to 69 Ω

NG → **REPLACE JUNCTION CONNECTOR**

OK

20	CONNECT CONNECTOR

(a) Reconnect the skid control ECU main bus line connector (A44) to the CAN J/C B side (w/o earth terminal).

NEXT

CA

21	CHECK CAN BUS LINE (SKID CONTROL ECU MAIN BUS LINE)

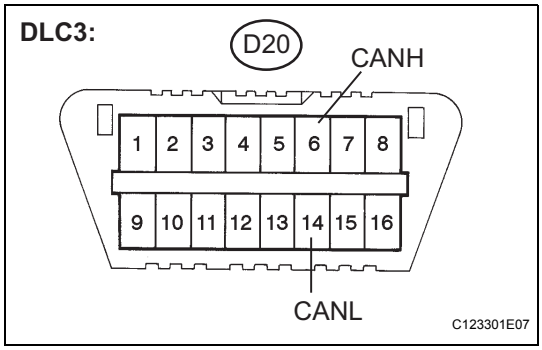

(a) Disconnect the skid control ECU connector (A34) or (A40).
(b) Measure the resistance according to the value(s) in the table below.

Resistance

Tester Connection	Condition	Specified value
D20-6 (CANH) - D20-14 (CANL)	Ignition switch off	108 to 132 Ω

OK → REPLACE SKID CONTROL ECU WITH ACTUATOR

NG

REPAIR OR REPLACE SKID CONTROL ECU MAIN BUS LINE OR CONNECTOR (CAN-H, CAN-L)

22	CONNECT CONNECTOR

(a) Reconnect the yaw rate sensor sub bus line connector (D49) to the CAN J/C A side (w/ earth terminal).

NEXT

23	CHECK CAN BUS LINE (YAW RATE SENSOR SUB BUS LINE)

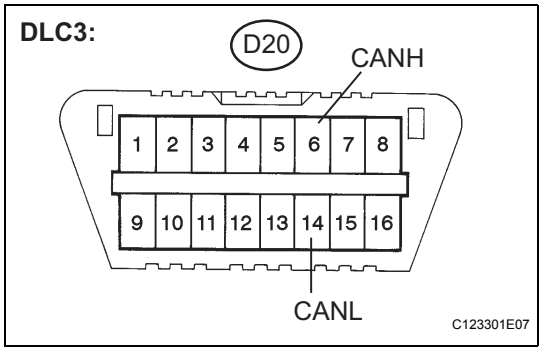

(a) Disconnect the yaw rate sensor connector (D28).
(b) Measure the resistance according to the value(s) in the table below.

Resistance

Tester Connection	Condition	Specified value
D20-6 (CANH) - D20-14 (CANL)	Ignition switch off	54 to 69 Ω

OK → REPLACE YAW RATE AND ACCELERATION SENSOR

NG

CA

REPAIR OR REPLACE YAW RATE SENSOR SUB BUS LINE OR CONNECTOR (CAN-H, CAN-L)

24	CONNECT CONNECTOR

(a) Reconnect the steering sensor sub bus line connector (D48) to the CAN J/C A side (w/ earth terminal).

NEXT

25	CHECK CAN BUS LINE (STEERING SENSOR SUB BUS LINE)

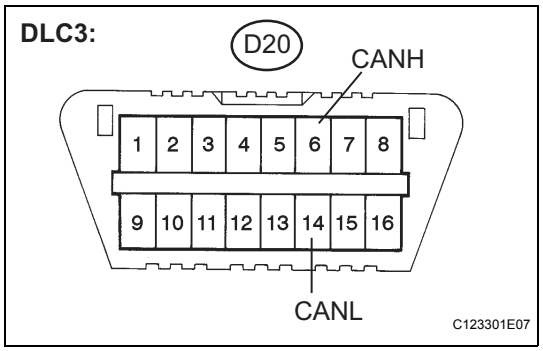

(a) Disconnect the steering sensor connector (D12).
(b) Measure the resistance according to the value(s) in the table below.

Resistance

Tester Connection	Condition	Specified value
D20-6 (CANH) - D20-14 (CANL)	Ignition switch off	54 to 69 Ω

OK → **REPLACE STEERING SENSOR**

NG

REPAIR OR REPLACE STEERING SENSOR SUB BUS LINE OR CONNECTOR (CAN-H, CAN-L)

Check CAN Bus Line for Short to GND

DESCRIPTION

There may be a short circuit between the CAN bus line and GND when there is resistance between terminals 6 (CANH) and 4 (CG), or terminals 14 (CANL) and 4 (CG), of the DLC3.

Symptom	Trouble Area
There is resistance between terminals 6 (CANH) and 4 (CG), or terminals 14 (CANL) and 4 (CG), of the DLC3.	• Short to GND • Distance control ECU • Skid control ECU with VSC actuator • Skid control ECU with ABS actuator • Steering sensor • Yaw rate sensor • ECM • Network gateway ECU • Junction connector (CAN J/C)

WIRING DIAGRAM

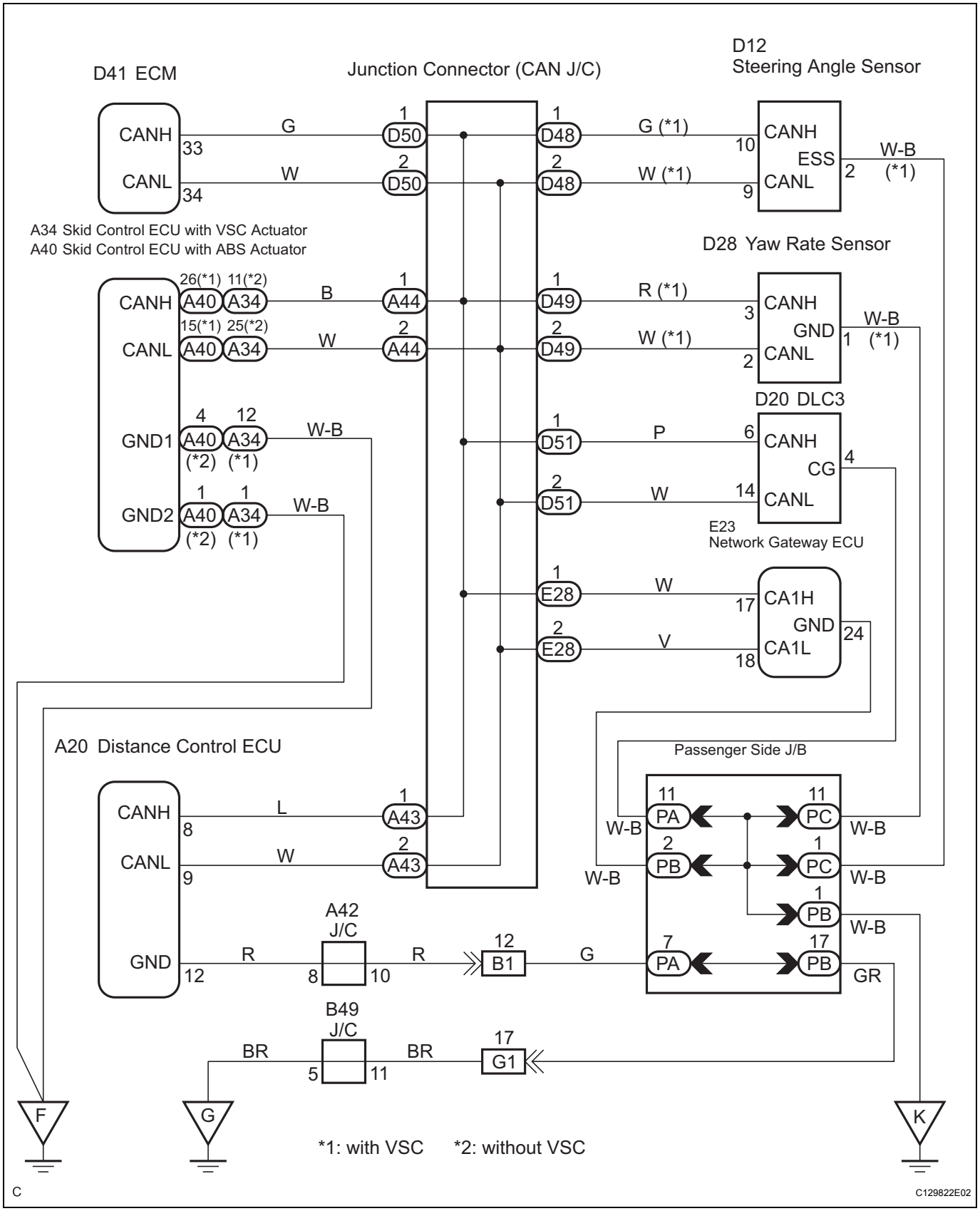

CA

INSPECTION PROCEDURE

1	CHECK CAN BUS LINE (DLC3 SUB BUS LINE)

CAN J/C A Side (w/ Earth Terminal) Wire Harness View:

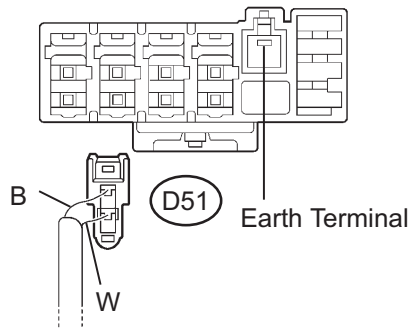

G031933E30

(a) Turn the ignition switch off.
(b) Disconnect the DLC3 sub bus line connector (D51) from the CAN J/C A side (w/ earth terminal).
NOTICE:
- **Before disconnecting the connector, make a note of where it is connected.**
- **Reconnect the connector to its original position.**

DLC3:

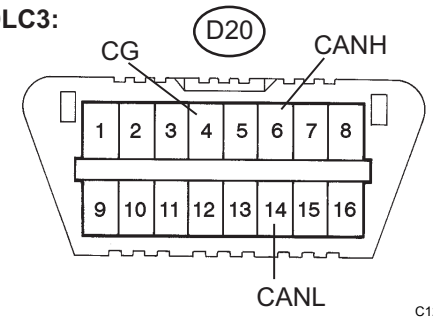

C123301E09

(c) Measure the resistance according to the value(s) in the table below.
Resistance

Tester Connection	Condition	Specified value
D20-6 (CANH) - D20-4 (CG)	Ignition switch off	1 MΩ or more
D20-14 (CANL) - D20-4 (CG)	Ignition switch off	1 MΩ or more

NG → **REPAIR OR REPLACE DLC3 BRANCH LINE OR CONNECTOR (CAN-H, CAN-L)**

OK

2	CONNECT CONNECTOR

(a) Reconnect the DLC3 sub bus line connector (D51) to the CAN J/C A side (w/ earth terminal).

NEXT

3	CHECK CAN BUS LINE (GATEWAY ECU)

CAN J/C B side (w/o Earth Terminal) Wire Harness View:

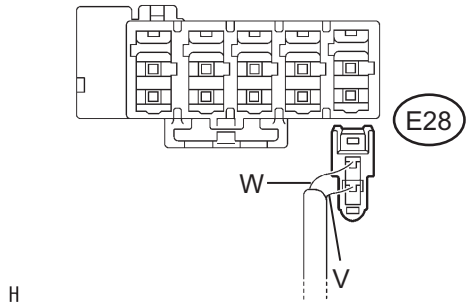

(a) Disconnect the gateway ECU sub bus line connector (E28) from the CAN J/C B side (w/o earth terminal).
NOTICE:
- **Before disconnecting the connector, make a note of where it is connected.**
- **Reconnect the connector to its original position.**

DLC3:

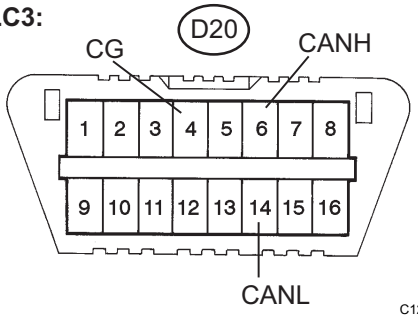

(b) Measure the resistance according to the value(s) in the table below.
Resistance

Tester Connection	Condition	Specified value
D20-6 (CANH) - D20-4 (CG)	Ignition switch off	1 kΩ or more
D20-14 (CANL) - D20-4 (CG)	Ignition switch off	1 kΩ or more

OK → **Go to step 10**

NG

4	CONNECT CONNECTOR

(a) Reconnect the gateway ECU sub bus line connector (E28) to the CAN J/C B side (w/o earth terminal).

NEXT

CA

5	CHECK CAN BUS LINE (ECM SUB MAIN LINE)

CAN J/C A Side (w/ Earth Terminal) Wire Harness View:

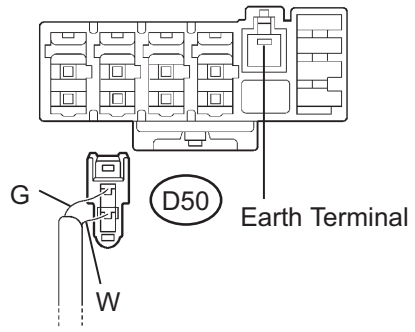

G031933E27

(a) Disconnect the ECM main bus line connector (D50) from the CAN J/C A side (w/ earth terminal).
NOTICE:
- **Before disconnecting the connector, make a note of where it is connected.**
- **Reconnect the connector to its original position.**

DLC3:

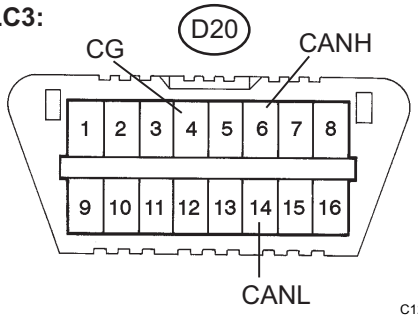

C123301E09

(b) Measure the resistance according to the value(s) in the table below.
Resistance

Tester Connection	Condition	Specified value
D20-6 (CANH) - D20-4 (CG)	Ignition switch off	1 kΩ or more
D20-14 (CANL) - D20-4 (CG)	Ignition switch off	1 kΩ or more

OK → **Go to step 12**

NG

6	CONNECT CONNECTOR

(a) Reconnect the ECM main bus line connector (D50) to the CAN J/C A side (w/ earth terminal).

NEXT

7	CHECK CAN BUS LINE (DISTANCE CONTROL ECU SUB BUS LINE)

NOTICE:
For vehicles without dynamic radar cruise control, go to step 15.

CA

CAN J/C B Side (w/o Earth Terminal) Wire Harness View:

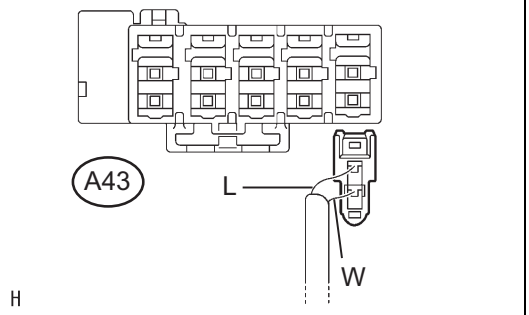

(a) Disconnect the distance control ECU sub bus line connector (A43) from the CAN J/C B side (w/o earth terminal).

NOTICE:

- **Before disconnecting the connector, make a note of where it is connected.**
- **Reconnect the connector to its original position.**

DLC3:

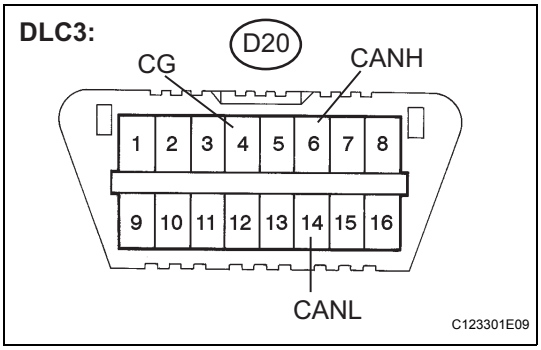

(b) Measure the resistance according to the value(s) in the table below.

Resistance

Tester Connection	Condition	Specified value
D20-6 (CANH) - D20-4 (CG)	Ignition switch off	1 kΩ or more
D20-14 (CANL) - D20-4 (CG)	Ignition switch off	1 kΩ or more

NG → **Go to step 14**

OK

8 CONNECT CONNECTOR

(a) Reconnect the distance control ECU sub bus line connector (A43) to the CAN J/C B side (w/o earth terminal).

NEXT

9 CHECK CAN BUS LINE (DISTANCE CONTROL ECU SUB BUS LINE)

DLC3:

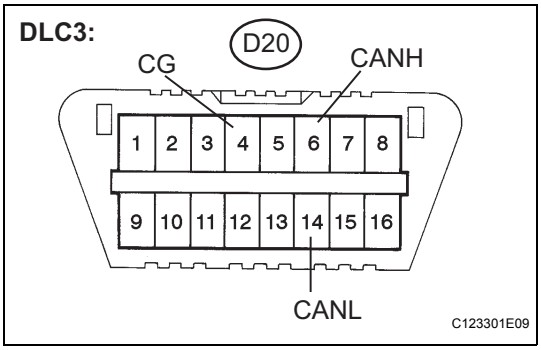

(a) Disconnect the distance control ECU connector (A43).

(b) Measure the resistance according to the value(s) in the table below.

Resistance

Tester Connection	Condition	Specified value
D20-6 (CANH) - D20-4 (CG)	Ignition switch off	1 kΩ or more
D20-14 (CANL) - D20-4 (CG)	Ignition switch off	1 kΩ or more

OK → **REPLACE DISTANCE CONTROL ECU**

CA

NG

REPAIR OR REPLACE DISTANCE CONTROL ECU BRANCH LINE OR CONNECTOR (CAN-H, CAN-L)

10	CONNECT CONNECTOR

(a) Reconnect the gateway ECU sub bus line connector (E28) to the CAN J/C B side (w/o earth terminal).

NEXT

11	CHECK CAN BUS LINE (GATEWAY ECU SUB BUS LINE)

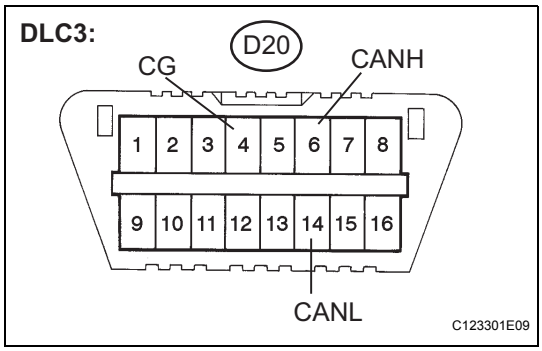

(a) Disconnect the gateway ECU connector (E23).
(b) Measure the resistance according to the value(s) in the table below.

Resistance

Tester Connection	Condition	Specified value
D20-6 (CANH) - D20-4 (CG)	Ignition switch off	1 kΩ or more
D20-14 (CANL) - D20-4 (CG)	Ignition switch off	1 kΩ or more

OK → REPLACE GATEWAY ECU

NG

REPAIR OR REPLACE GATEWAY ECU SUB BUS LINE OR CONNECTOR (CAN-H, CAN-L)

12	CONNECT CONNECTOR

(a) Reconnect the ECM sub bus line connector (D50) to the CAN J/C A side (w/ earth terminal).

NEXT

13	CHECK CAN BUS LINE (ECM MAIN BUS LINE)

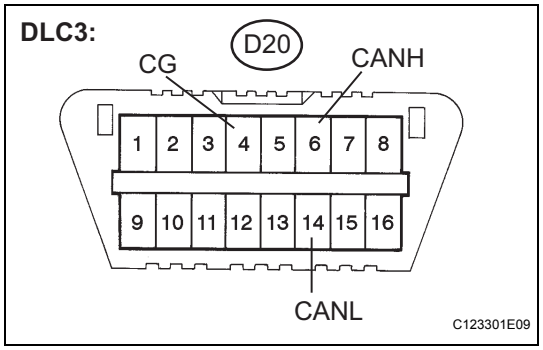

(a) Disconnect the ECM connector (D41).
(b) Measure the resistance according to the value(s) in the table below.

Resistance

Tester Connection	Condition	Specified value
D20-6 (CANH) - D20-4 (CG)	Ignition switch off	1 kΩ or more
D20-14 (CANL) - D20-4 (CG)	Ignition switch off	1 kΩ or more

OK → **REPLACE ECM**

NG

REPAIR OR REPLACE ECM MAIN BUS LINE OR CONNECTOR (CAN-H, CAN-L)

14	CONNECT CONNECTOR

(a) Reconnect the distance control ECU sub bus line connector (A43) to the CAN J/C B side (w/o earth terminal).

MEXT

15	CHECK CAN BUS LINE (YAW RATE SENSOR SUB BUS LINE)

CAN J/C A Side (w/ Earth Terminal) Wire Harness View:

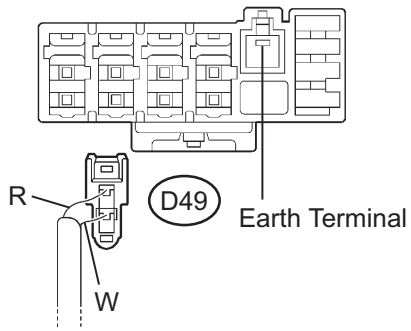

(a) Disconnect the yaw rate sensor sub bus line connector (D49) from the CAN J/C A side (w/ earth terminal).

NOTICE:

- **Before disconnecting the connector, make a note of where it is connected.**
- **Reconnect the connector to its original position.**

CA

DLC3:

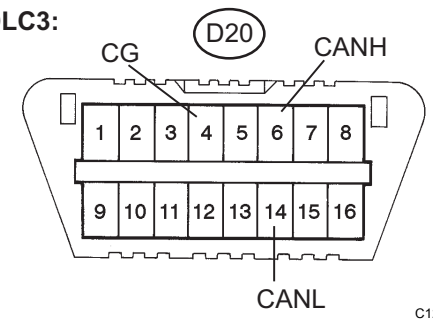

(b) Measure the resistance according to the value(s) in the table below.

Resistance

Tester Connection	Condition	Specified value
D20-6 (CANH) - D20-4 (CG)	Ignition switch off	1 kΩ or more
D20-14 (CANL) - D20-4 (CG)	Ignition switch off	1 kΩ or more

OK → Go to step 22

NG

16 CONNECT CONNECTOR

(a) Reconnect the yaw rate sensor sub bus line connector (D49) to the CAN J/C A side (w/ earth terminal).

NEXT

17 CHECK CAN BUS LINE (STEERING SENSOR SUB BUS LINE)

CAN J/C A Side (w/ Earth Terminal) Wire Harness View:

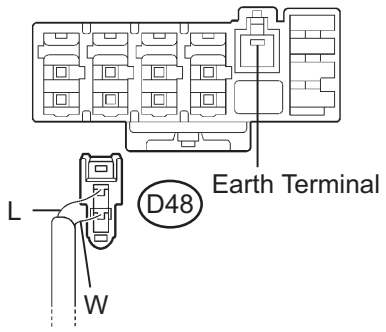

(a) Disconnect the steering sensor sub bus line connector (D48) from the CAN J/C A side (w/ earth terminal).

NOTICE:

- **Before disconnecting the connector, make a note of where it is connected.**
- **Reconnect the connector to its original position.**

DLC3:

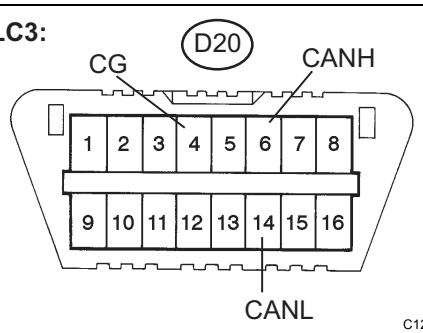

(b) Measure the resistance according to the value(s) in the table below.

Resistance

Tester Connection	Condition	Specified value
D20-6 (CANH) - D20-4 (CG)	Ignition switch off	1 kΩ or more
D20-14 (CANL) - D20-4 (CG)	Ignition switch off	1 kΩ or more

OK → Go to step 24

NG

CA

18	CONNECT CONNECTOR

(a) Reconnect the steering sensor sub bus line connector (D48) to the CAN J/C A side (w/ earth terminal).

NEXT

19	CHECK CAN BUS LINE (SKID CONTROL ECU WITH ACTUATOR MAIN BUS LINE)

CAN J/C A Side (w/ Earth Terminal) Wire Harness View:

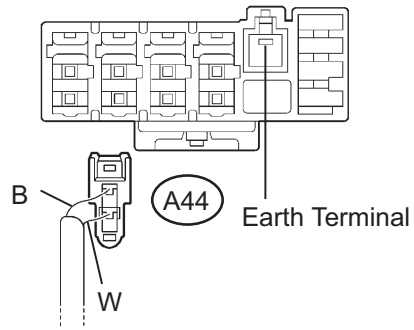

(a) Disconnect the skid control ECU main bus line connector (A44) from the CAN J/C B side (w/o earth terminal).
NOTICE:
- **Before disconnecting the connector, make a note of where it is connected.**
- **Reconnect the connector to its original position.**

DLC3:

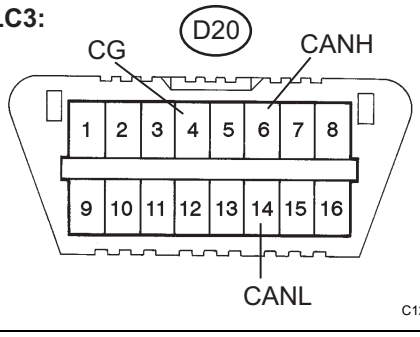

(b) Measure the resistance according to the value(s) in the table below.
Resistance

Tester Connection	Condition	Specified value
D20-6 (CANH) - D20-4 (CG)	Ignition switch off	1 kΩ or more
D20-14 (CANL) - D20-4 (CG)	Ignition switch off	1 kΩ or more

NG → **REPLACE JUNCTION CONNECTOR**

OK

20	CONNECT CONNECTOR

(a) Reconnect the skid control ECU main bus line connector (A44) to the CAN J/C A side (w/ earth terminal).

NEXT

CA

21	CHECK CAN BUS LINE (SKID CONTROL ECU MAIN BUS LINE)

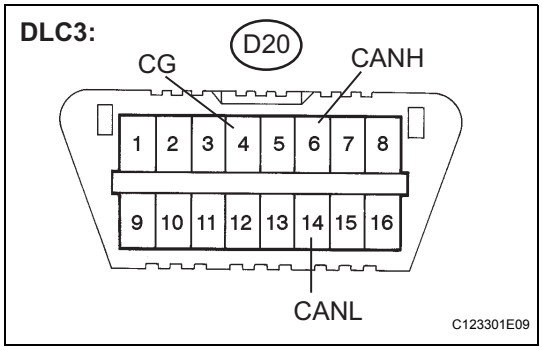

(a) Disconnect the skid control ECU connector (A34) or (A40).
(b) Measure the resistance according to the value(s) in the table below.

Resistance

Tester Connection	Condition	Specified value
D20-6 (CANH) - D20-4 (CG)	Ignition switch off	1 kΩ or more
D20-14 (CANL) - D20-4 (CG)	Ignition switch off	1 kΩ or more

OK → REPLACE SKID CONTROL ECU WITH ACTUATOR

NG → REPAIR OR REPLACE SKID CONTROL ECU BRANCH LINE OR CONNECTOR (CAN-H, CAN-L)

22	CONNECT CONNECTOR

(a) Reconnect the yaw rate sensor sub bus line connector (D49) to the CAN J/C A side (w/ earth terminal).

NEXT

23	CHECK CAN BUS LINE (YAW RATE SENSOR SUB BUS LINE)

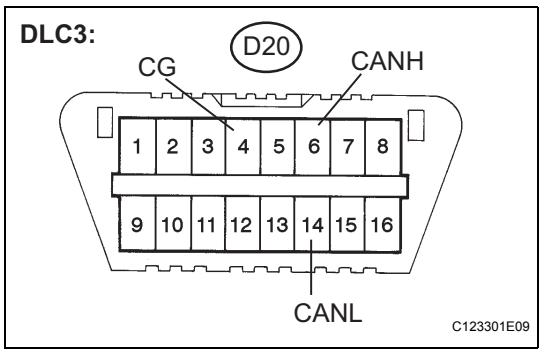

(a) Disconnect the yaw rate sensor connector (Y1).
(b) Measure the resistance according to the value(s) in the table below.

Resistance

Tester Connection	Condition	Specified value
D20-6 (CANH) - D20-4 (CG)	Ignition switch off	1 kΩ or more
D20-14 (CANL) - D20-4 (CG)	Ignition switch off	1 kΩ or more

OK → REPLACE YAW RATE AND ACCELERATION SENSOR

NG → REPAIR OR REPLACE YAW RATE SENSOR SUB BUS LINE OR CONNECTOR (CAN-H, CAN-L)

CA

24	CONNECT CONNECTOR

(a) Reconnect the steering sensor sub bus line connector (D48) to the CAN J/C A side (w/ earth terminal).

NEXT

25	CHECK CAN BUS LINE (STEERING SENSOR SUB BUS LINE)

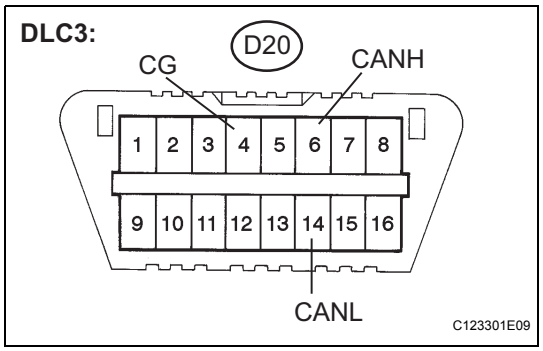

(a) Disconnect the steering sensor connector (D12).
(b) Measure the resistance according to the value(s) in the table below.

Resistance

Tester Connection	Condition	Specified value
D20-6 (CANH) - D20-4 (CG)	Ignition switch off	1 kΩ or more
D20-14 (CANL) - D20-4 (CG)	Ignition switch off	1 kΩ or more

OK → REPLACE STEERING SENSOR

NG

REPAIR OR REPLACE STEERING SENSOR SUB BUS LINE OR CONNECTOR (CAN-H, CAN-L)

Check CAN Bus Line for Short to +B (LHD Models)

DESCRIPTION

There may be a short circuit between the CAN bus line and +B when there is resistance between terminals 6 (CANH) and 16 (BAT), or terminals 14 (CANL) and 16 (BAT), of the DLC3.

Symptom	Trouble Area
There is resistance between terminals 6 (CANH) and 16 (BAT), or terminals 14 (CANL) and 16 (BAT), of the DLC3.	• Short to +B • Distance control ECU • Skid control ECU with VSC actuator • Skid control ECU with ABS actuator • Steering sensor • Yaw rate sensor • Suspension control ECU • ECM • Network gateway ECU

WIRING DIAGRAM

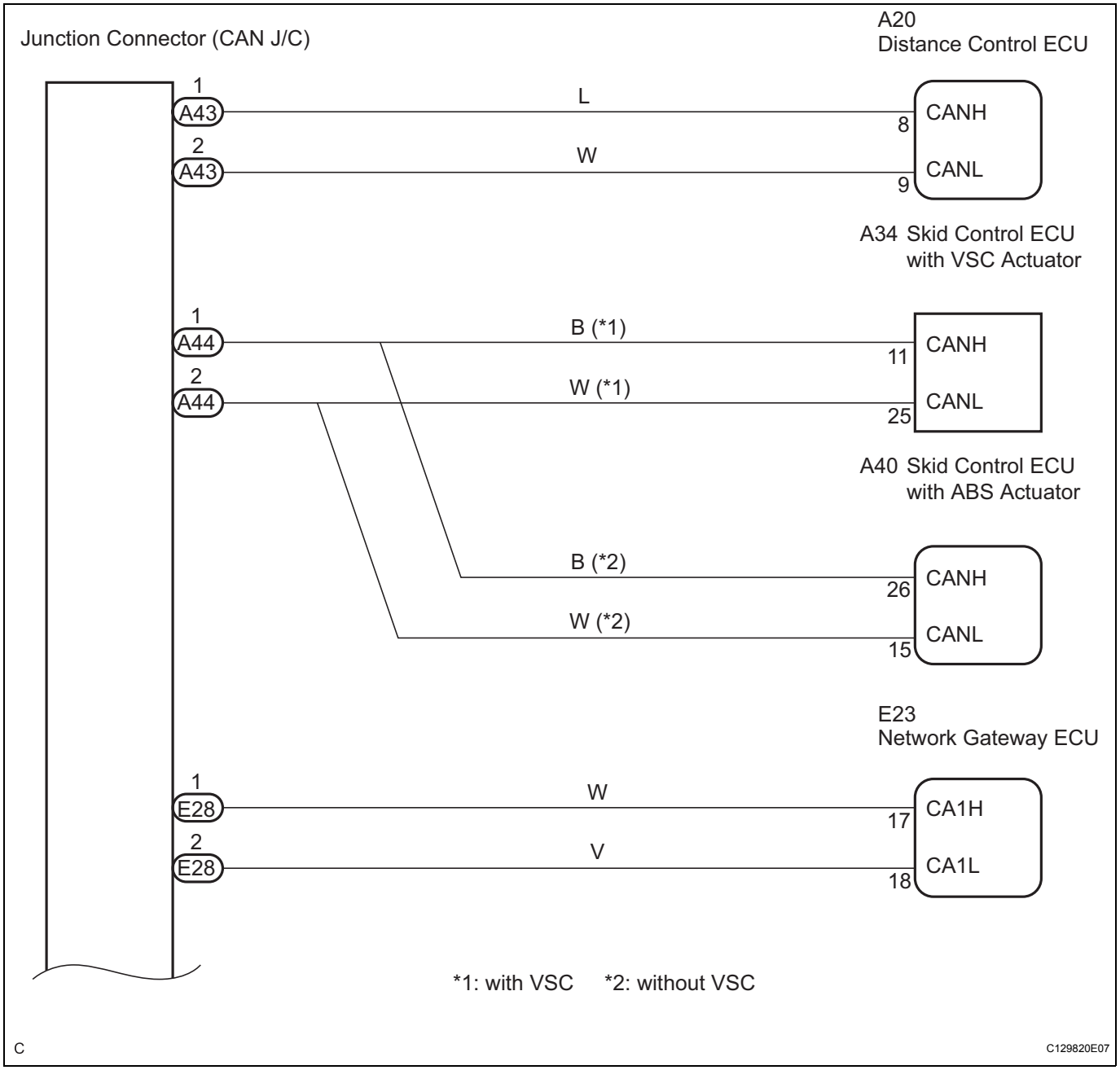

CA

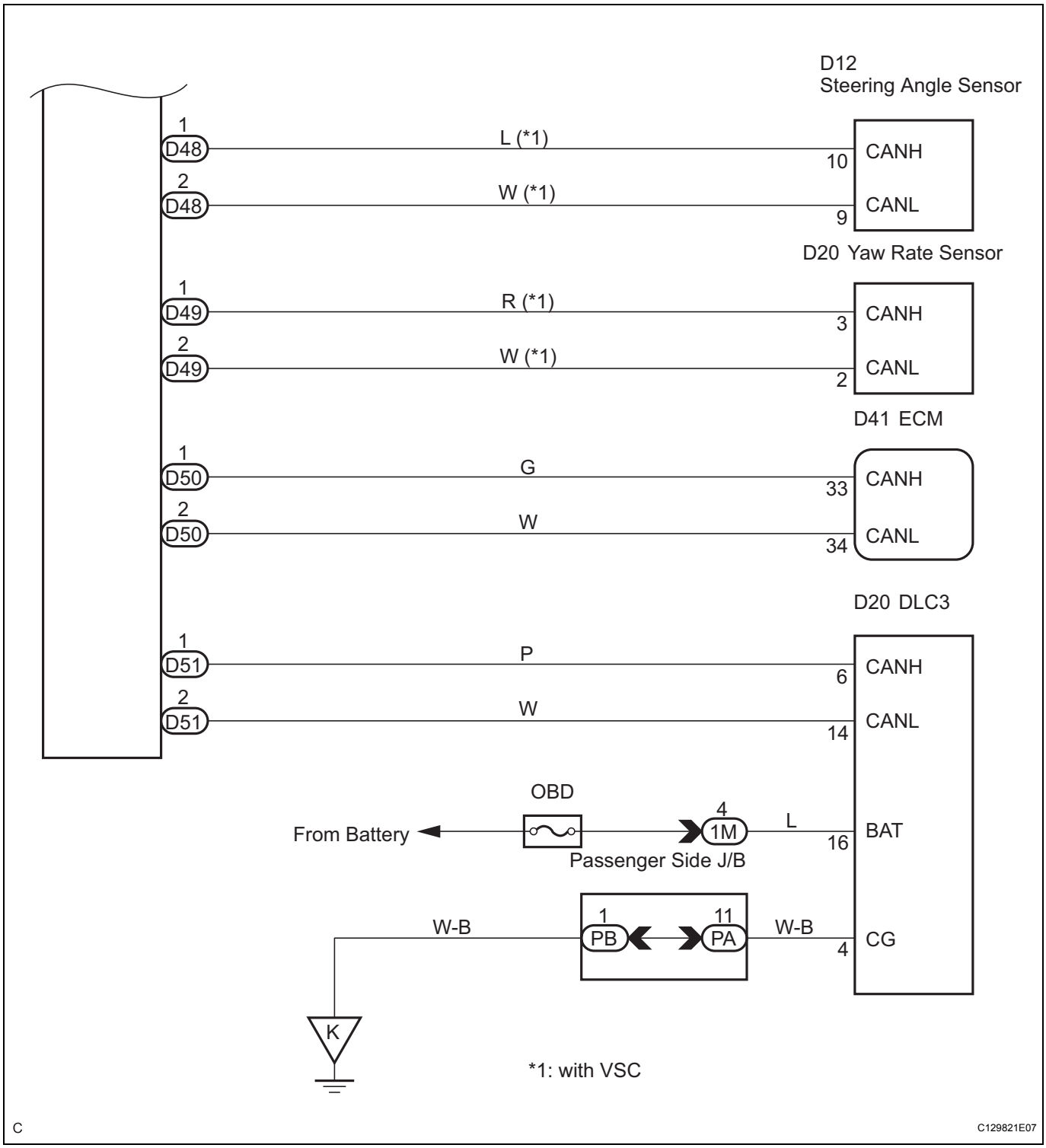
D12
Steering Angle Sensor
1
D48
L (*1)
10
CANH
2
D48
W (*1)
9
CANL
D20 Yaw Rate Sensor
1
D49
R (*1)
3
CANH
2
D49
W (*1)
2
CANL
D41 ECM
1
D50
G
33
CANH
2
D50
W
34
CANL
D20 DLC3
1
D51
P
6
CANH
2
D51
W
14
CANL
OBD
From Battery
4
1M
L
16
BAT
Passenger Side J/B
W-B
1
PB
11
PA
W-B
4
CG
K
*1: with VSC
C
C129821E07

CA

INSPECTION PROCEDURE

1	CHECK CAN BUS LINE (DLC3 SUB BUS LINE)

CAN J/C A Side (w/ Earth Terminal) Wire Harness View:

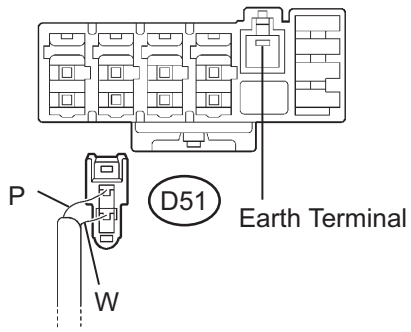

G031933E26

(a) Turn the ignition switch off.

(b) Disconnect the DLC3 sub bus line connector (D51) from the CAN J/C A side (w/ earth terminal).

NOTICE:

- **Before disconnecting the connector, make a note of where it is connected.**
- **Reconnect the connector to its original position.**

DLC3:

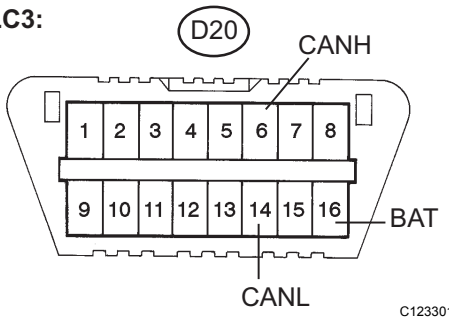

C123301E08

(c) Measure the resistance according to the value(s) in the table below.

Resistance

Tester Connection	Condition	Specified value
D20-6 (CANH) - D20-16 (BAT)	Ignition switch off	1 MΩ or more
D20-14 (CANL) - D20-16 (BAT)	Ignition switch off	1 MΩ or more

NG → **REPAIR OR REPLACE DLC3 BRANCH LINE OR CONNECTOR (CAN-H, CAN-L)**

OK

2	CONNECT CONNECTOR

(a) Reconnect the DLC3 sub bus line connector (D51) to the CAN J/C A side (w/ earth terminal).

NEXT

CA

3	CHECK CAN BUS LINE (GATEWAY ECU SUB BUS LINE)

CAN J/C B side (w/o Earth Terminal) Wire Harness View:

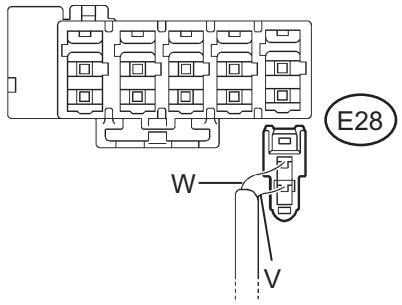

(a) Disconnect the gateway ECU sub bus line connector (E28) from the CAN J/C B side (w/o earth terminal).
NOTICE:
- **Before disconnecting the connector, make a note of where it is connected.**
- **Reconnect the connector to its original position.**

DLC3:

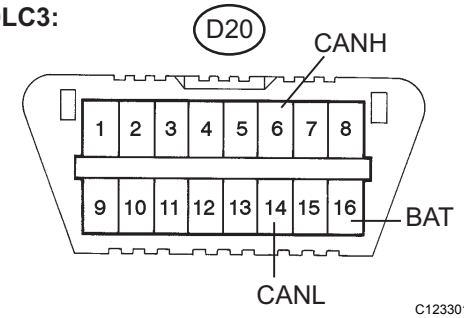

(b) Measure the resistance according to the value(s) in the table below.
Resistance

Tester Connection	Condition	Specified value
D20-6 (CANH) - D20-16 (BAT)	Ignition switch off	1 MΩ or more
D20-14 (CANL) - D20-16 (BAT)	Ignition switch off	1 MΩ or more

OK → **Go to step 10**

NG

4	CONNECT CONNECTOR

(a) Reconnect the gateway ECU sub bus line connector (E28) to the CAN J/C B side (w/o earth terminal).

NEXT

5	CHECK CAN BUS LINE (ECM MAIN BUS LINE)

CAN J/C A Side (w/ Earth Terminal) Wire Harness View:

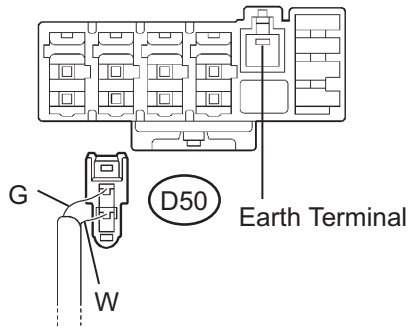

G031933E27

(a) Disconnect the ECM main bus line connector (D50) from the CAN J/C A side (w/ earth terminal).
NOTICE:
- **Before disconnecting the connector, make a note of where it is connected.**
- **Reconnect the connector to its original position.**

DLC3:

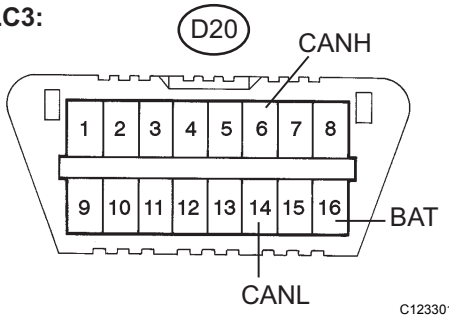

C123301E08

(b) Measure the resistance according to the value(s) in the table below.
Resistance

Tester Connection	Condition	Specified value
D20-6 (CANH) - D20-16 (BAT)	Ignition switch off	1 MΩ or more
D20-14 (CANL) - D20-16 (BAT)	Ignition switch off	1 MΩ or more

OK → **Go to step 12**

NG

6	CONNECT CONNECTOR

(a) Reconnect the ECM sub bus line connector (D50) to the CAN J/C A side (w/ earth terminal).

NEXT

7	CHECK CAN BUS LINE (DISTANCE CONTROL ECU SUB BUS LINE)

NOTICE:
For vehicles without dynamic radar cruise control, go to step 15.

CA

CAN J/C B Side (w/o Earth Terminal) Wire Harness View:

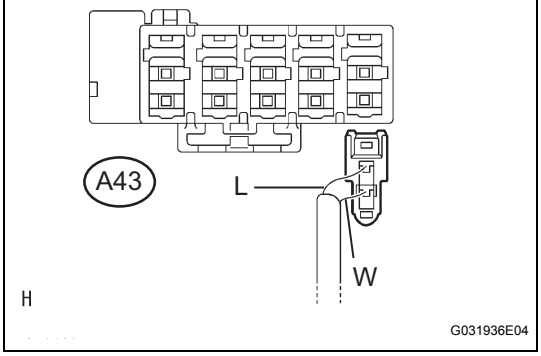

(a) Disconnect the distance control ECU sub bus line connector (A43) from the CAN J/C B side (w/o earth terminal).

NOTICE:

- **Before disconnecting the connector, make a note of where it is connected.**
- **Reconnect the connector to its original position.**

DLC3:

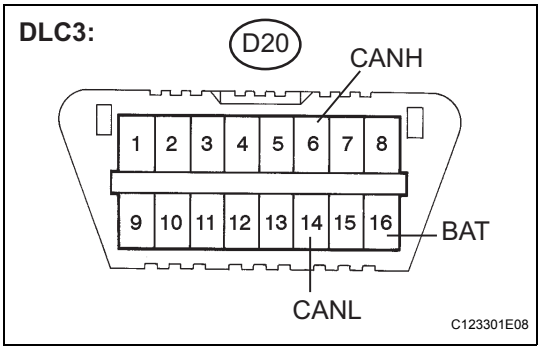

(b) Measure the resistance according to the value(s) in the table below.

Resistance

Tester Connection	Condition	Specified value
D20-6 (CANH) - D20-16 (BAT)	Ignition switch off	1 MΩ or more
D20-14 (CANL) - D20-16 (BAT)	Ignition switch off	1 MΩ or more

NG → **Go to step 14**

OK

8 CONNECT CONNECTOR

(a) Reconnect the distance control ECU sub bus line connector (A43) to the CAN J/C B side (w/o earth terminal).

NEXT

9 CHECK CAN BUS LINE (DISTANCE CONTROL ECU SUB BUS LINE)

DLC3:

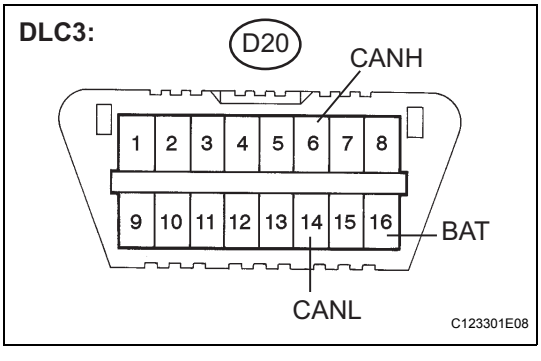

(a) Disconnect the distance control ECU connector (A29).

(b) Measure the resistance according to the value(s) in the table below.

Resistance

Tester Connection	Condition	Specified value
D20-6 (CANH) - D20-16 (BAT)	Ignition switch off	1 MΩ or more
D20-14 (CANL) - D20-16 (BAT)	Ignition switch off	1 MΩ or more

NG → **REPAIR OR REPLACE DISTANCE CONTROL ECU BRANCH LINE OR CONNECTOR (CAN-H, CAN-L)**

CA

OK

REPLACE DISTANCE CONTROL ECU

10	CONNECT CONNECTOR

(a) Reconnect the gateway ECU sub bus line connector (E28) to the CAN J/C B side (w/o earth terminal).

NEXT

11	CHECK CAN BUS LINE (GATEWAY ECU SUB BUS LINE)

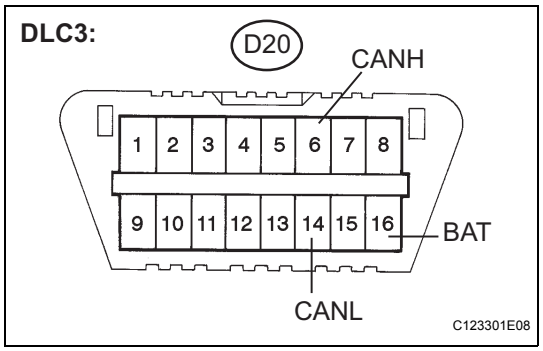

(a) Disconnect the gateway ECU sub bus line connector (E23).
(b) Measure the resistance according to the value(s) in the table below.

Resistance

Tester Connection	Condition	Specified value
D20-6 (CANH) - D20-16 (BAT)	Ignition switch off	1 MΩ or more
D20-14 (CANL) - D20-16 (BAT)	Ignition switch off	1 MΩ or more

OK → **REPLACE GATEWAY ECU**

NG

REPAIR OR REPLACE GATEWAY ECU SUB BUS LINE OR CONNECTOR (CAN-H, CAN-L)

12	CONNECT CONNECTOR

(a) Reconnect the ECM main bus line connector (D50) to the CAN J/C A side (w/ earth terminal).

NEXT

13	CHECK CAN BUS LINE (ECM MAIN BUS LINE)

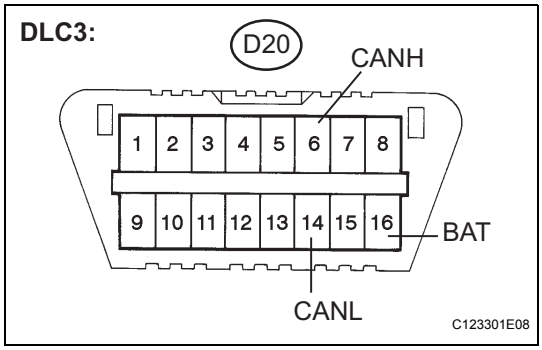

(a) Disconnect the ECM connector (E41).
(b) Measure the resistance according to the value(s) in the table below.

Resistance

Tester Connection	Condition	Specified value
D20-6 (CANH) - D20-16 (BAT)	Ignition switch off	1 MΩ or more
D20-14 (CANL) - D20-16 (BAT)	Ignition switch off	1 MΩ or more

OK → REPLACE ECM

NG

REPAIR OR REPLACE ECM MAIN BUS LINE OR CONNECTOR (CAN-H, CAN-L)

14	CONNECT CONNECTOR

(a) Reconnect the distance control ECU sub bus line connector (A43) to the CAN J/C B side (w/o earth terminal).

NEXT

15	CHECK CAN BUS LINE (YAW RATE SENSOR SUB BUS LINE)

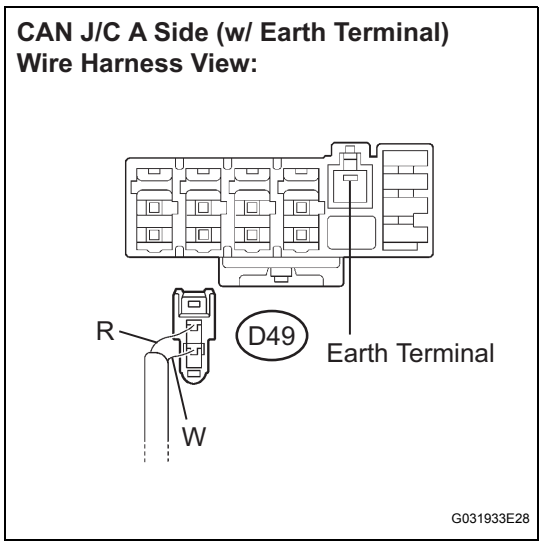

(a) Disconnect the yaw rate sensor sub bus line connector (D49) from the CAN J/C A side (w/ earth terminal).

NOTICE:

- **Before disconnecting the connector, make a note of where it is connected.**
- **Reconnect the connector to its original position.**

CA

DLC3:

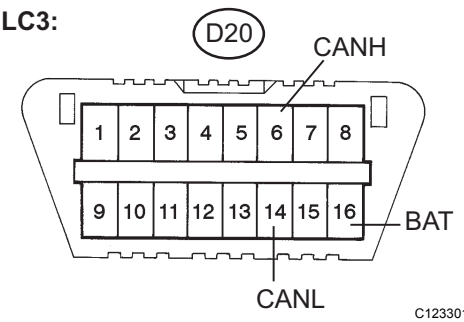

(b) Measure the resistance according to the value(s) in the table below.

Resistance

Tester Connection	Condition	Specified value
D20-6 (CANH) - D20-16 (BAT)	Ignition switch off	1 MΩ or more
D20-14 (CANL) - D20-16 (BAT)	Ignition switch off	1 MΩ or more

OK → **Go to step 22**

NG

16 CONNECT CONNECTOR

(a) Reconnect the yaw rate sensor sub bus line connector (D49) to the CAN J/C A side (w/ earth terminal).

NEXT

17 CHECK CAN BUS LINE (STEERING SENSOR SUB BUS LINE)

CAN J/C A Side (w/ Earth Terminal) Wire Harness View:

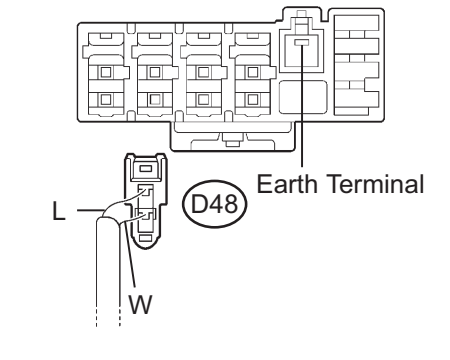

(a) Disconnect the steering sensor sub bus line connector (D48) from the CAN J/C A side (w/ earth terminal).

NOTICE:

- **Before disconnecting the connector, make a note of where it is connected.**
- **Reconnect the connector to its original position.**

DLC3:

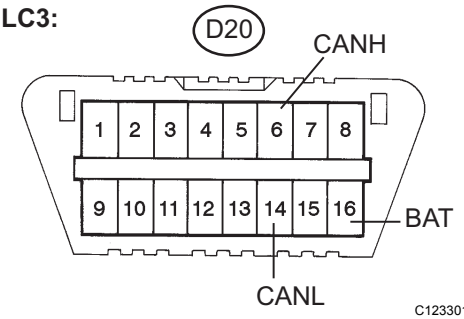

(b) Measure the resistance according to the value(s) in the table below.

Resistance

Tester Connection	Condition	Specified value
D20-6 (CANH) - D20-16 (BAT)	Ignition switch off	1 MΩ or more
D20-14 (CANL) - D20-16 (BAT)	Ignition switch off	1 MΩ or more

OK → **Go to step 20**

NG

CA

18	CONNECT CONNECTOR

(a) Reconnect the steering sensor connector (D48) to the CAN J/C A side (w/ earth terminal).

NEXT

19	CHECK CAN BUS LINE (SKID CONTROL ECU MAIN BUS LINE)

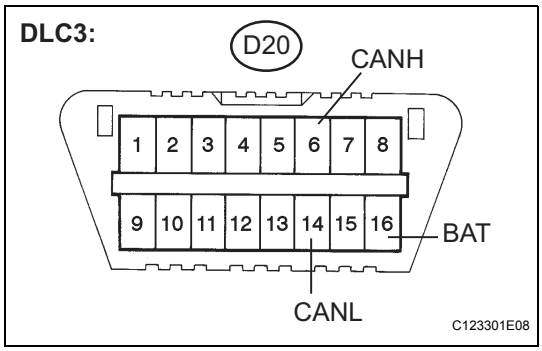

(a) Disconnect the skid control ECU connector (A34) or (A40).
(b) Measure the resistance according to the value(s) in the table below.

Resistance

Tester Connection	Condition	Specified value
D20-6 (CANH) - D20-16 (BAT)	Ignition switch off	1 MΩ or more
D20-14 (CANL) - D20-16 (BAT)	Ignition switch off	1 MΩ or more

OK → REPLACE SKID CONTROL ECU WITH ACTUATOR

NG

REPAIR OR REPLACE SKID CONTROL ECU MAIN BUS LINE OR CONNECTOR (CAN-H, CAN-L)

20	CONNECT CONNECTOR

(a) Reconnect the steering sensor sub bus line connector (D48) to the CAN J/C A side (w/ earth terminal).

NEXT

21	CHECK CAN BUS LINE (STEERING SENSOR SUB BUS LINE)

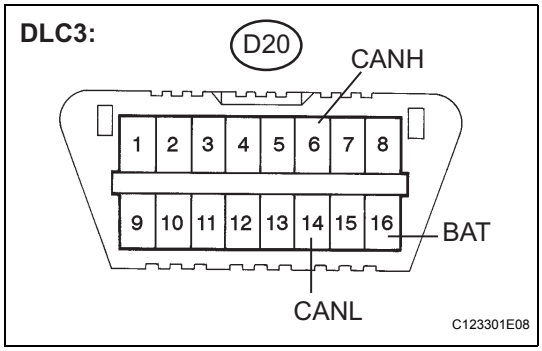

(a) Disconnect the steering sensor connector (D12).
(b) Measure the resistance according to the value(s) in the table below.

Resistance

Tester Connection	Condition	Specified value
D20-6 (CANH) - D20-16 (BAT)	Ignition switch off	1 MΩ or more
D20-14 (CANL) - D20-16 (BAT)	Ignition switch off	1 MΩ or more

OK → REPLACE STEERING SENSOR

CA

NG

REPAIR OR REPLACE STEERING SENSOR SUB BUS LINE OR CONNECTOR (CAN-H, CAN-L)

22	CONNECT CONNECTOR

(a) Reconnect the yaw rate sensor sub bus line connector (D49) to the CAN J/C A side (w/ earth terminal).

NEXT

23	CHECK CAN BUS LINE (YAW RATE SENSOR SUB BUS LINE)

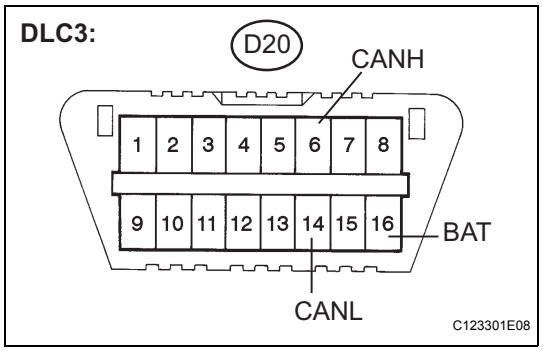

(a) Disconnect the yaw rate sensor connector (D28).
(b) Measure the resistance according to the value(s) in the table below.

Resistance

Tester Connection	Condition	Specified value
D20-6 (CANH) - D20-16 (BAT)	Ignition switch off	1 MΩ or more
D20-14 (CANL) - D20-16 (BAT)	Ignition switch off	1 MΩ or more

OK → **REPLACE YAW RATE AND ACCELERATION SENSOR**

NG

REPAIR OR REPLACE YAW RATE SENSOR SUB BUS LINE OR CONNECTOR (CAN-H, CAN-L)

Open in One Side of CAN Sub Bus Line

DESCRIPTION

If 2 or more ECUs and / or sensors do not appear on the intelligent tester's "BUS CHECK" screen via the CAN VIM, one side of the CAN sub-bus line may be open. (One side of the CAN-H [sub-bus line] / CAN-L [sub-bus line] of the ECU and / or sensor is open.)

Symptom	Trouble Area
2 or more ECUs and / or sensors do not appear on the intelligent tester's "BUS CHECK" screen via the CAN VIM.	• One side of the CAN sub-bus line is open • Skid control ECU with VSC actuator • Skid control ECU with ABS actuator • Steering angle sensor • Yaw rate sensor • ECM • Distance control ECU • Network gateway ECU

WIRING DIAGRAM

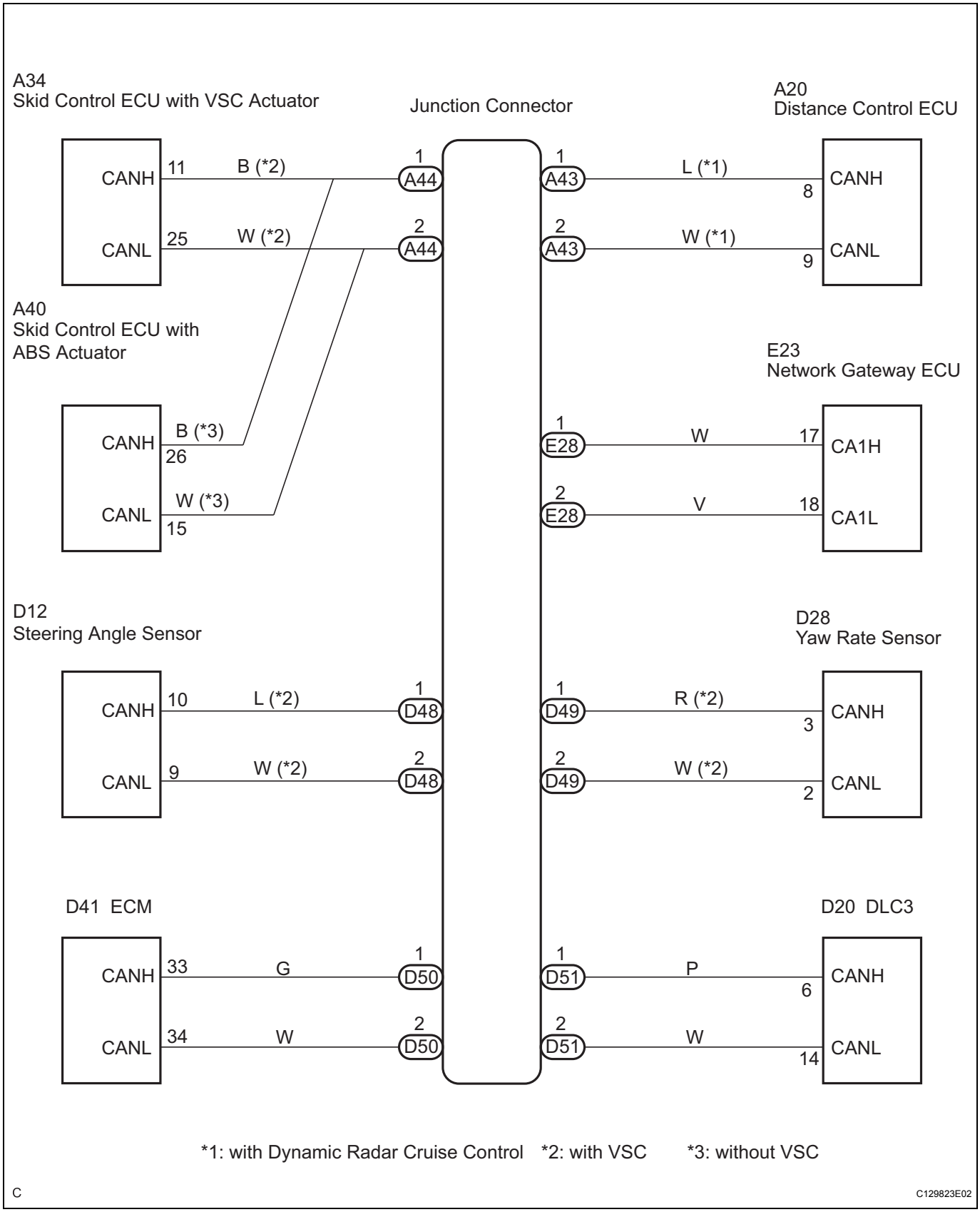

INSPECTION PROCEDURE

HINT:

- The following is the troubleshooting procedure of an open in either CANH or CANL of the ECU A.

CA

- Perform the following inspection for the ECUs (sensors) which are not displayed on the intelligent tester. If a malfunction cannot be identified, then perform the following inspections for the ECUs (sensors) connected to CAN communication.

1 CHECK CAN BUS LINE

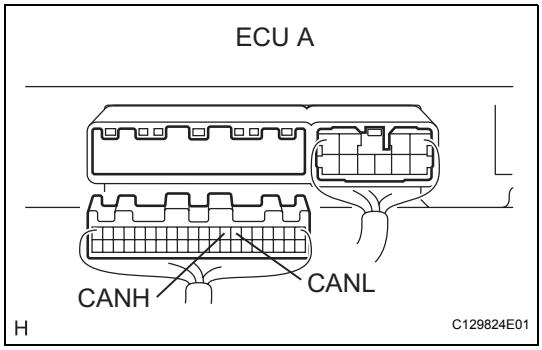

(a) Disconnect the connector with terminals CANH and CANL of the ECU A.
(b) Select "CHECK the ECU connected to CAN BUS" on the intelligent tester.

Standard

A	B
Only ECUs are not displayed on the intelligent tester.	Several ECUs and sensor are not displayed on the intelligent tester.

B → **CONNECT THE ECU A CONNECTOR TO THE ECU (SENSOR) AND INSPECT OTHER ECUS (SENSORS) TO MEET "STANDARD A"**

A

2 CHECK CAN BUS LINE

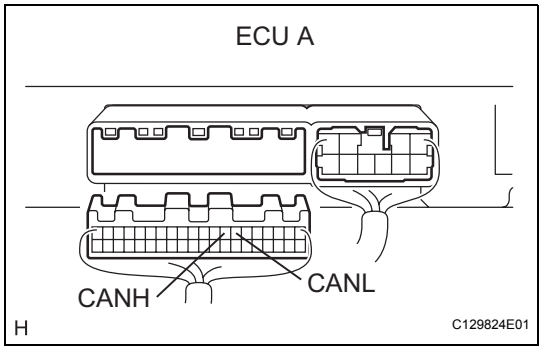

(a) Measure the resistance according to the value(s) in the table below.

Resistance

ECUs (sensors)	Specified Condition
ECM	108 to 132 Ω
Skid control ECU	108 to 132 Ω
Other ECUs (sensor)	54 to 69 Ω

NG → **REPAIR OR REPLACE ECU A BUS LINE OR CONNECTOR**

OK

REPLACE ECU A

CHARGING SYSTEM

PRECAUTION

CAUTION:

- **Check that the battery cables are connected to the correct terminals.**
- **Disconnect the battery cables when the battery is charged quickly.**
- **Do not perform tests with a high voltage insulation resistance tester.**
- **Never disconnect the battery while the engine is running.**
- **Check that the charging cable is connected to terminal B of the generator and the fuse box.**
- **Do not perform inspection of the generator in which terminal F is connected to the other terminal.**

1. EXPRESSIONS OF IGNITION SWITCH

(a) The type of ignition switch used on this model differs according to the specifications of the vehicle. The expressions listed in the table below are used in this section.

Switch Type		Ignition Switch (position)	Engine Switch (condition)
Expression	Ignition Switch off	LOCK	Off
	Ignition Switch on (IG)	ON	On (IG)
	Ignition Switch on (ACC)	ACC	On (ACC)
	Engine Start	START	Start

PARTS LOCATION

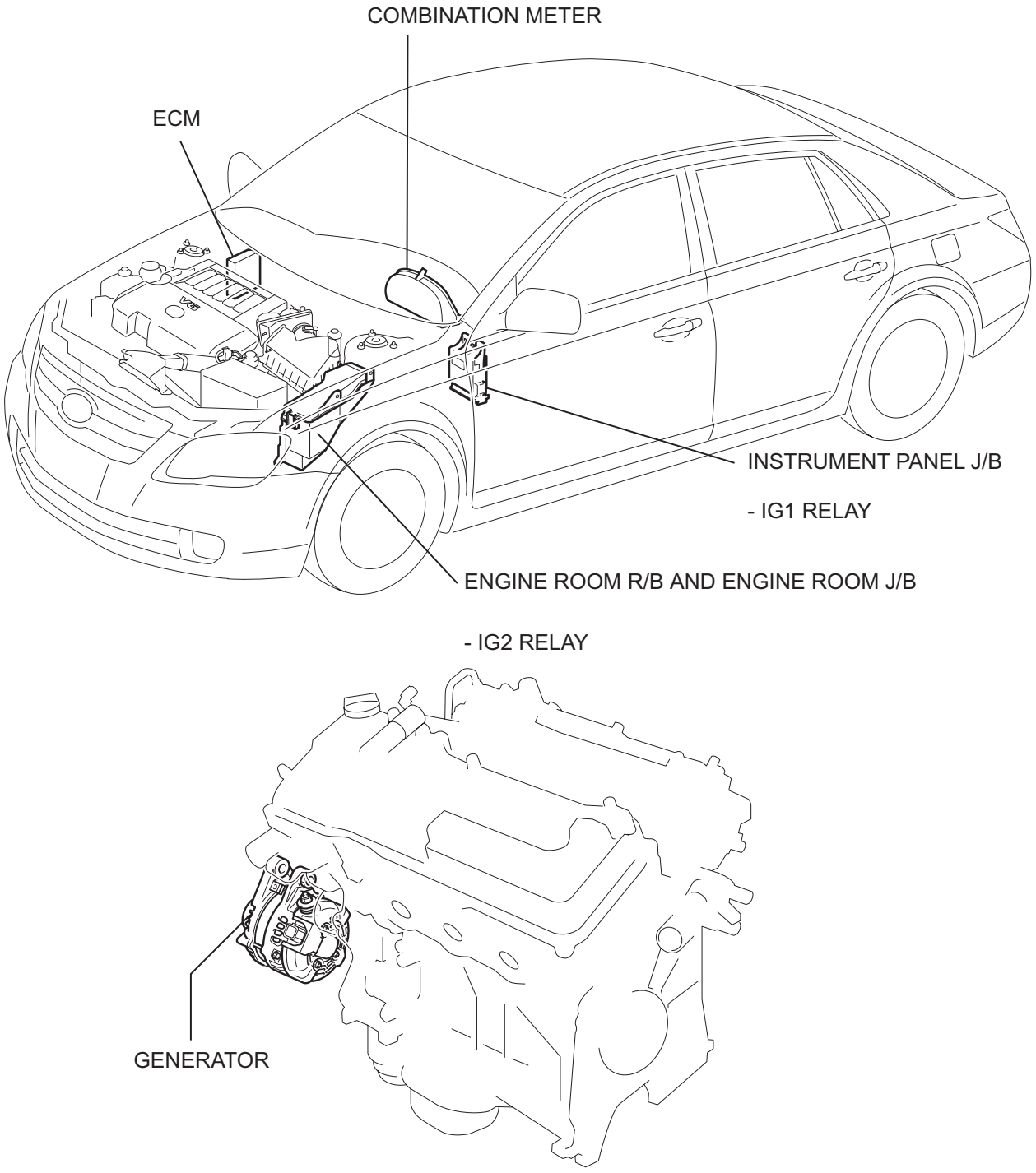

T

A114598E01

SYSTEM DIAGRAM

w/o Smart Key System:

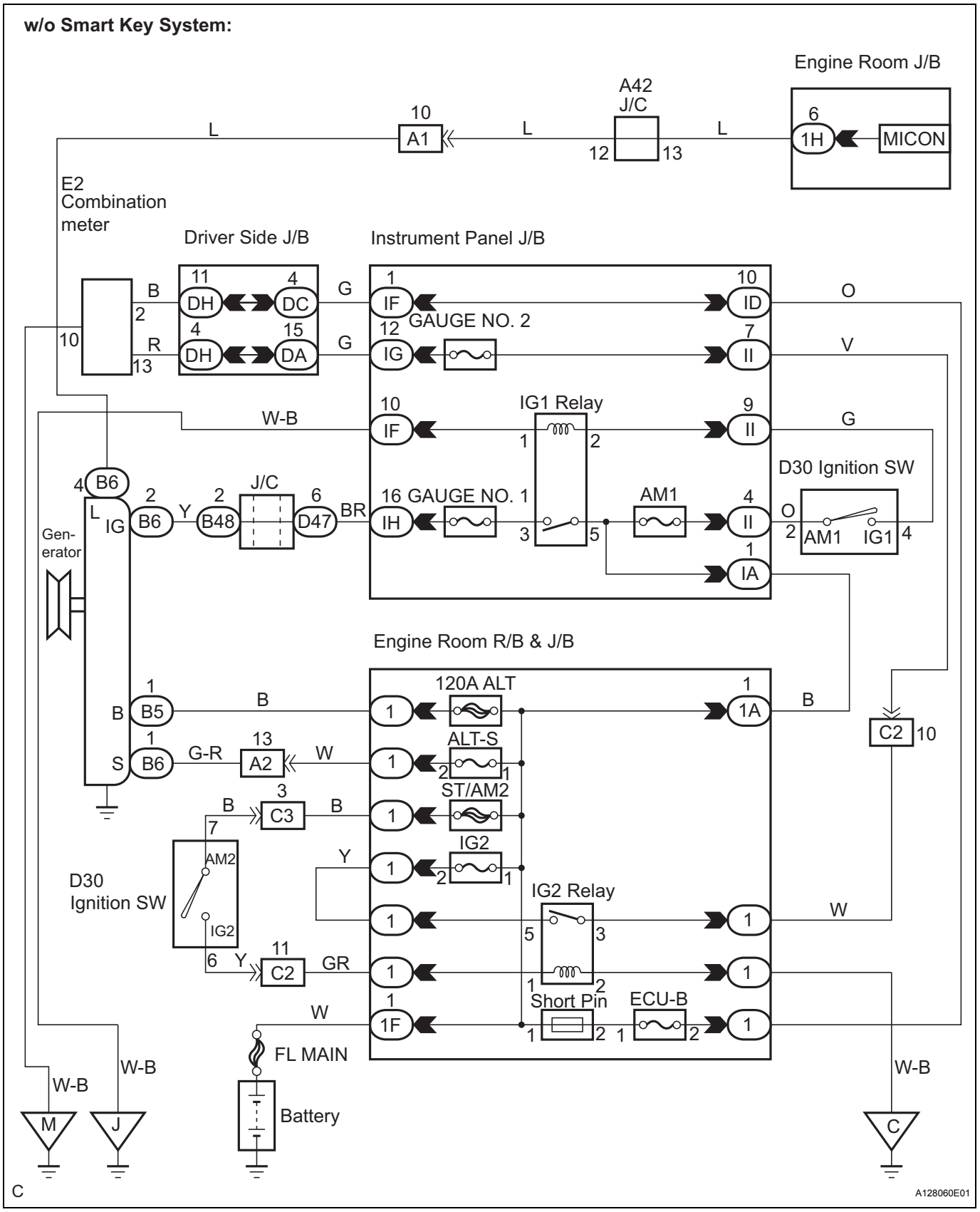

w/ Smart Key System:

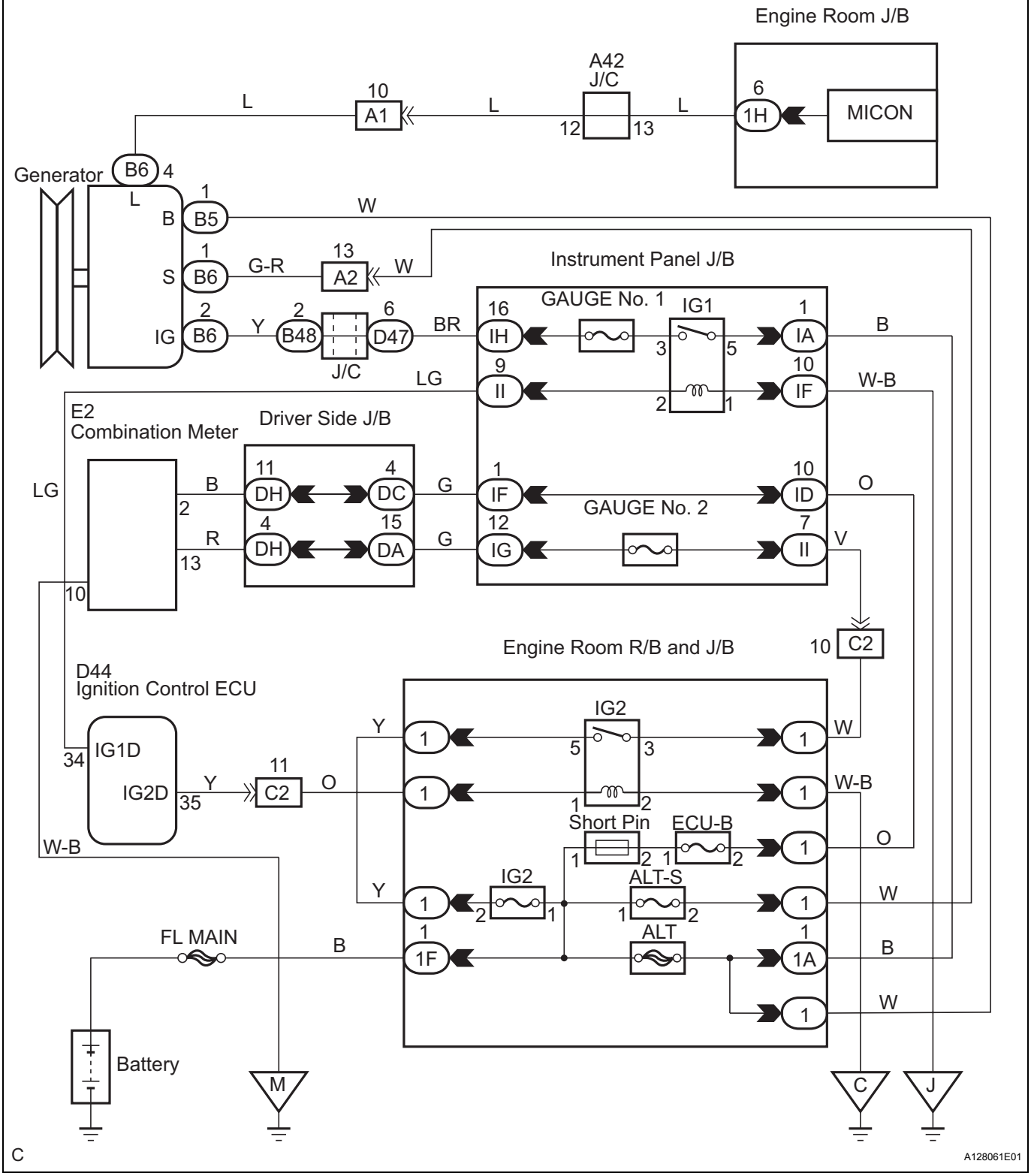

ON-VEHICLE INSPECTION

CAUTION:
If the battery is weak or if the engine is difficult to start, recharge the battery and perform inspections again before returning the vehicle to the customer.

1. CHECK BATTERY CONDITION

(a) Check the battery for damage and deformation. If severe damage, deformation or leakage is found, replace the battery.

(b) Check the electrolyte quantity of each cell.
For batteries that are maintenance-free:
– If the electrolyte quantity is below the recommended amount, replace the battery.
For batteries that are not maintenance-free:
– If the electrolyte quantity is below the recommended amount, add distilled water.

2. CHECK BATTERY TERMINALS, FUSIBLE LINK AND FUSES

(a) Check that the battery terminals are not loose or corroded.
If the terminals are corroded, clean the terminals.

(b) Check that the resistance of the fusible link, H-fuse and fuses is below 1 Ω.
If the fusible link or fuses are not as specified, replace the past.

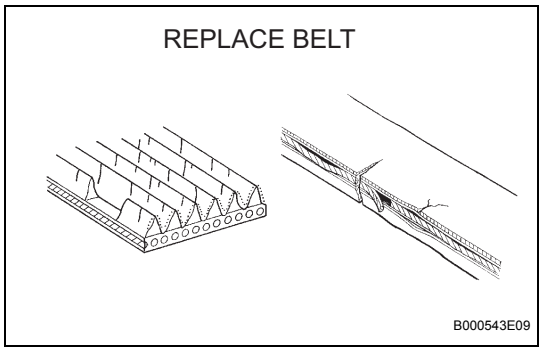

3. INSPECT DRIVE BELT

(a) Check the belt for wear, cracks and other signs of damage.
If any defect is found, replace the drive belt.
HINT:
Replace the drive belt if any of the following defects are found:
- The belt has worn out until the wire can be seen.
- The cracks reach the wire in more than one place.
- The belt has chunks missing from the ribs.

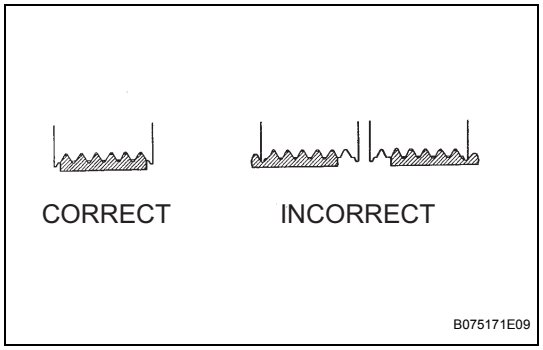

(b) Check that the belt fits properly in the ribbed grooves.
HINT:
Confirm that the belt has not slipped out of the groove on the bottom of the pulley by hand.

4. VISUALLY CHECK GENERATOR WIRING

(a) Check that the wiring is in good condition.

5. CHECK FOR ABNORMAL NOISES FROM GENERATOR

(a) Check that there is no abnormal noise from the generator while the engine is running.

6. INSPECT CHARGE WARNING LIGHT CIRCUIT

(a) Turn the ignition switch on (IG). Check that the charge warning light comes on.

(b) Start the engine and check that the light goes off. If the light does not operate as specified, troubleshoot the charge warning light circuit.

7. INSPECT CHARGING CIRCUIT WITHOUT LOAD

HINT:
If a battery / generator tester is available, connect the tester to the charging circuit according to the manufacturer's instructions.

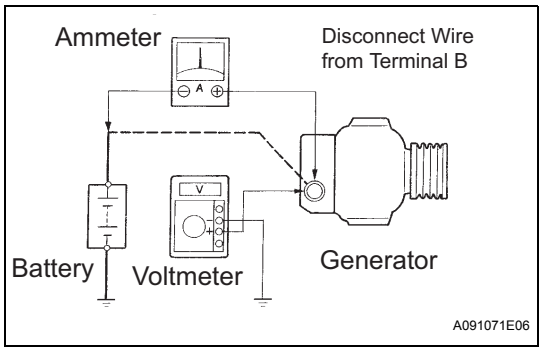

(a) If a tester is not available, connect a voltmeter and ammeter to the charging circuit as follows:
  (1) Disconnect the wire from terminal B of the generator and connect it to the negative (-) lead of the ammeter.
  (2) Connect the ammeter's positive (+) lead to terminal B of the generator.
  (3) Connect the voltmeter's positive (+) lead to terminal B of the generator.
  (4) Ground the voltmeter's negative (-) lead.

(b) Check the charging circuit.
  (1) Keep the engine speed at 2,000 rpm. Check the reading on the ammeter and voltmeter.
  Standard amperage:
  10 A or less
  Standard voltage:
  13.2 to 14.8 V
  If the result is not as specified, replace the generator.

8. INSPECT CHARGING CIRCUIT WITH LOAD

(a) With the engine running at 2,000 rpm, turn on the high beam headlights and turn the heater blower switch to the HI position.

(b) Check the reading on the ammeter.
  Standard amperage:
  30 A or more
  HINT:
  - If the ammeter reading is less than the standard amperage, repair the generator.
  - If the battery is fully charged, the ammeter reading will sometimes be less than the standard amperage.

CH

GENERATOR

COMPONENTS

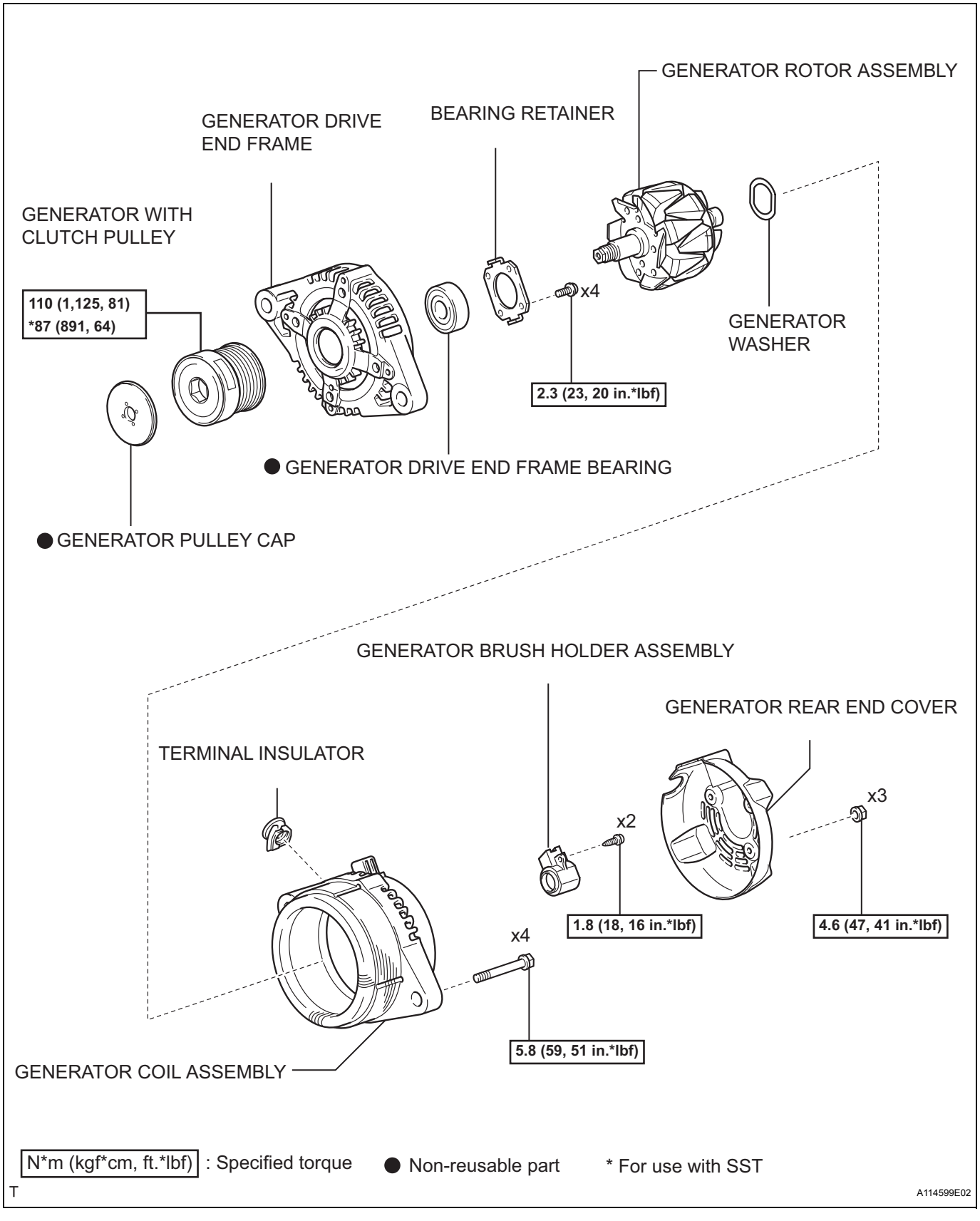

N*m (kgf*cm, ft.*lbf) : Specified torque ● Non-reusable part * For use with SST

T

A114599E02

CH

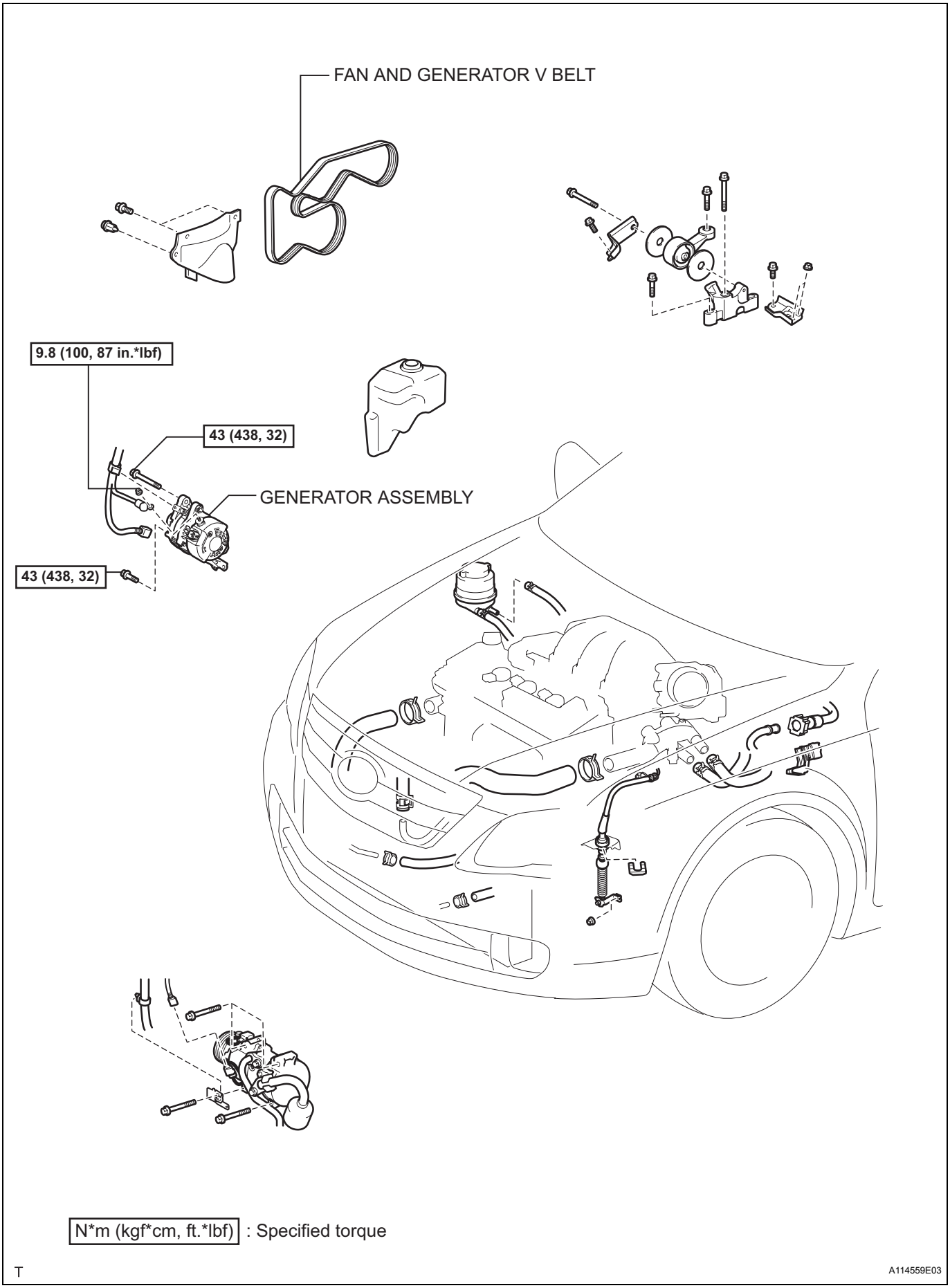
FAN AND GENERATOR V BELT
9.8 (100, 87 in.*lbf)
43 (438, 32)
GENERATOR ASSEMBLY
43 (438, 32)
N*m (kgf*cm, ft.*lbf) : Specified torque
T
A114559E03

REMOVAL

1. **DISCONNECT CABLE FROM NEGATIVE BATTERY TERMINAL**
2. **REMOVE V-BANK COVER SUB-ASSEMBLY (See page FU-12)**
3. **REMOVE FAN AND GENERATOR V BELT (See page EM-28)**
4. **REMOVE GENERATOR ASSEMBLY**
   (a) Disconnect the wire harness clamp.

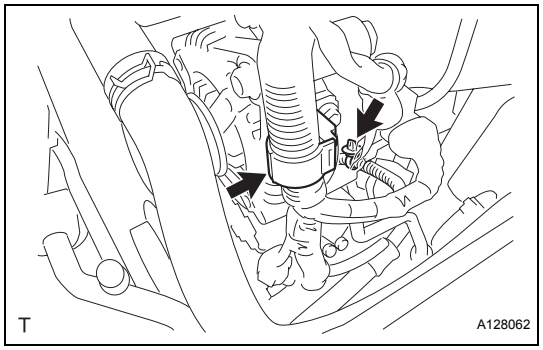

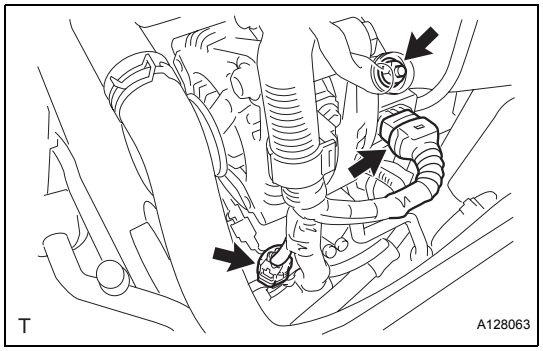

   (b) Remove the terminal cap.
   (c) Remove the nut and disconnect the wire harness from terminal B.
   (d) Disconnect the generator connector from the generator assembly.

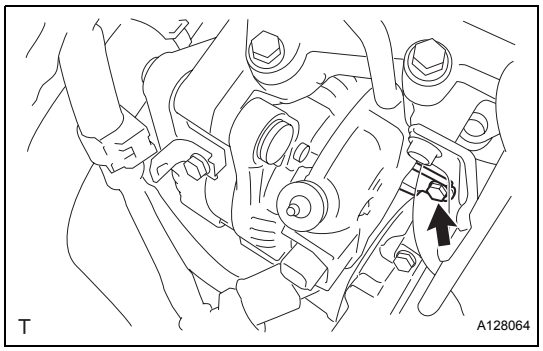

   (e) Remove the nut from the cylinder block.

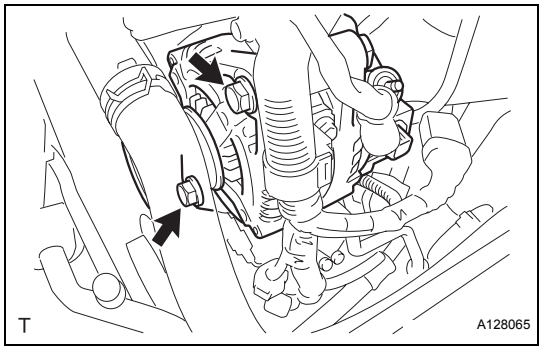

   (f) Remove the 2 bolts and generator assembly.

CH

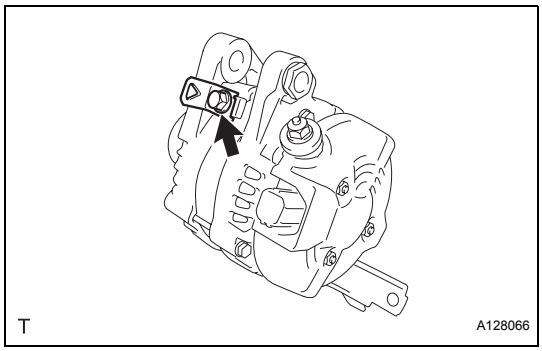

(g) Remove the bolt and wire harness clamp stay.

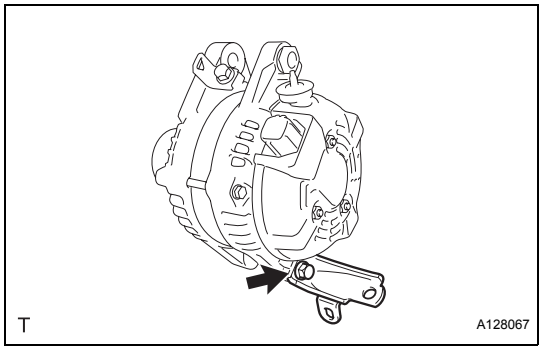

(h) Remove the bolt and bracket.

DISASSEMBLY

1. REMOVE GENERATOR WITH CLUTCH PULLEY

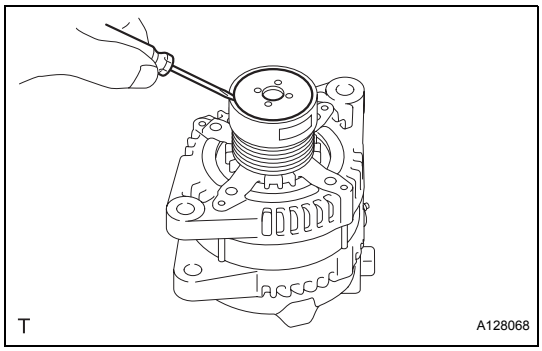

(a) Using a screwdriver, remove the generator pulley cap.

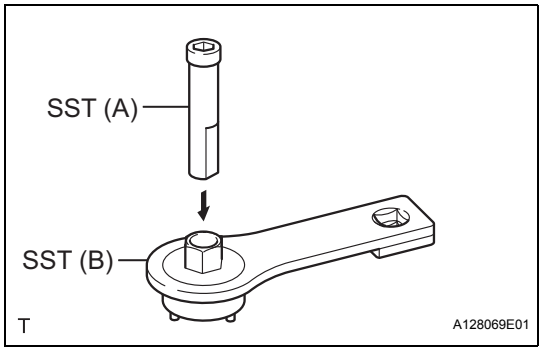

(b) Set SST (A) and (B).
SST 09820-63020
(1) Set the rotor shaft to SST (A).
(2) Mount SST (A) in a vise.

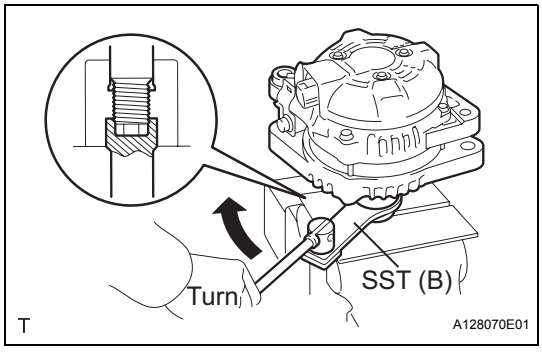

(c) Install the generator with the SST as shown in the illustration.
(d) Turn SST (B) clockwise, and loosen the generator pulley.
(e) Remove the generator from SST.
(f) Remove the pulley from the rotor shaft.

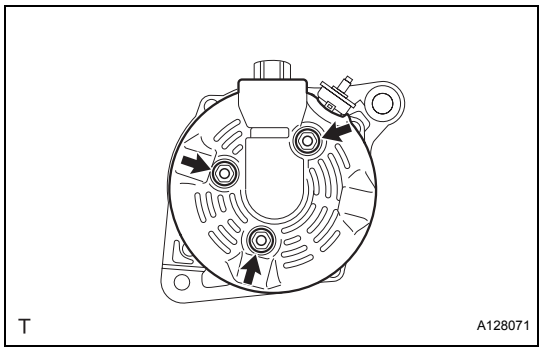

2. REMOVE GENERATOR REAR END COVER

(a) Remove the 3 nuts and generator rear end cover.

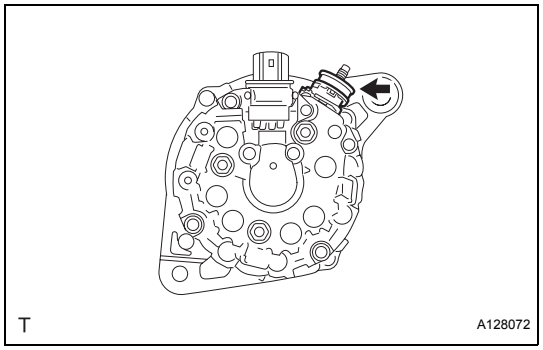

3. REMOVE TERMINAL INSULATOR

(a) Remove the terminal insulator.

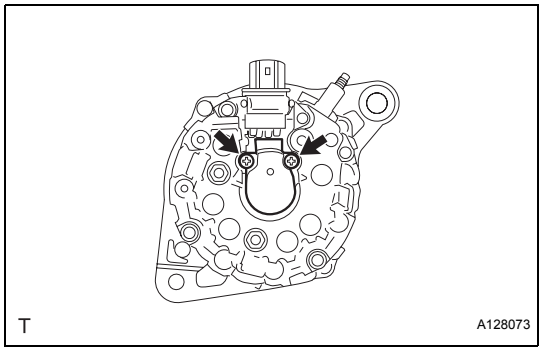

4. REMOVE GENERATOR BRUSH HOLDER ASSEMBLY

(a) Remove the 2 screws and generator brush holder assembly.

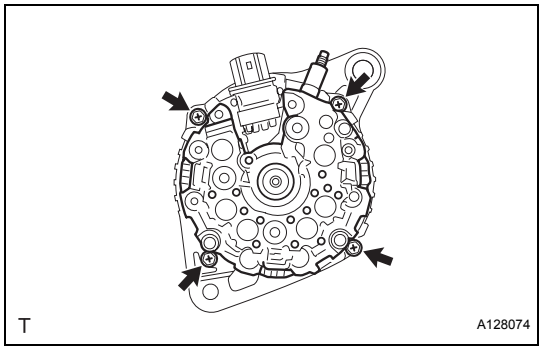

5. REMOVE GENERATOR COIL ASSEMBLY

(a) Remove the 4 bolts.

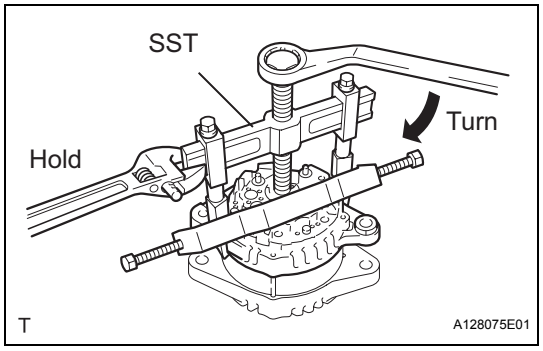

(b) Using SST, remove the generator coil assembly.
SST 09950-40011 (09951-04020, 09952-04010, 09953-04020, 09954-04010, 09955-04071, 09957-04010, 09958-04011)

(c) Remove the generator washer.

6. REMOVE GENERATOR ROTOR ASSEMBLY

(a) Remove the generator rotor assembly.

CH

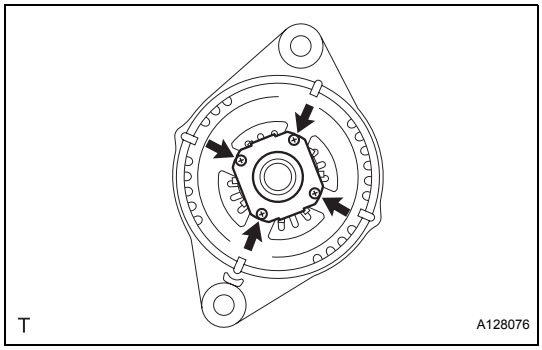

7. REMOVE GENERATOR DRIVE END FRAME BEARING

(a) Remove the 4 screws and bearing retainer.

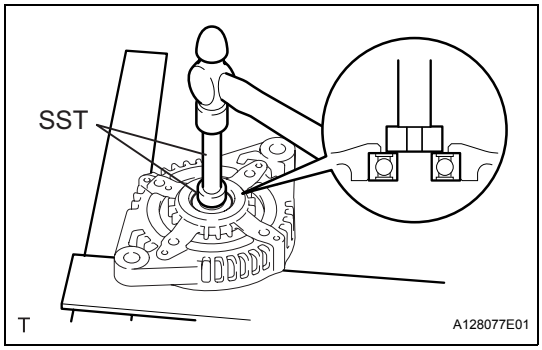

(b) Using SST and a hammer, tap out the generator drive end frame bearing.

SST 09950-60010 (09951-00250), 09950-70010 (09951-07100)

INSPECTION

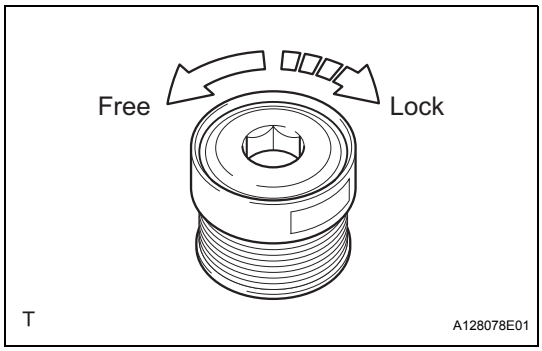

1. INSPECT GENERATOR WITH CLUTCH PULLEY

(a) When rotating the generator pulley, check that it turns counterclockwise and does not turn clockwise.

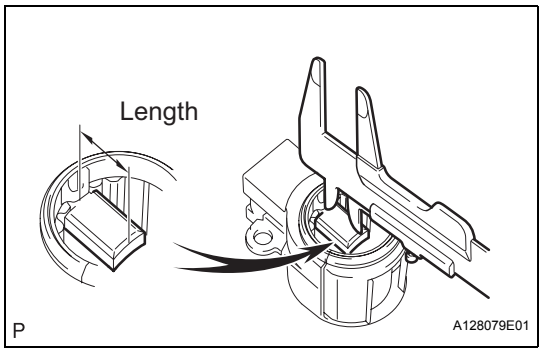

2. INSPECT GENERATOR BRUSH HOLDER ASSEMBLY

(a) Using vernier calipers, measure the exposed brush length.

Standard exposed length:
10.5 mm (0.413 in.)
Minimum exposed length:
4.5 mm (0.177 in.)

If the exposed length is less than the minimum, replace the generator brush holder assembly.

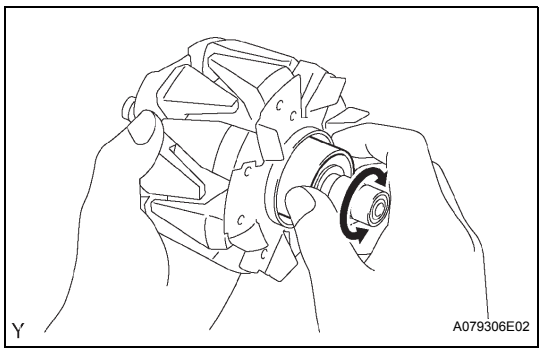

3. INSPECT GENERATOR ROTOR ASSEMBLY

(a) Check that the generator rotor bearing is not rough or worn.

If necessary, replace the generator rotor.

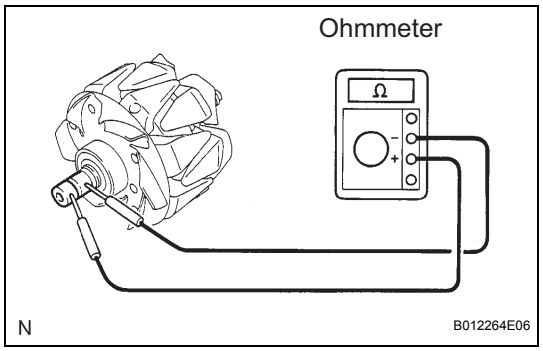

(b) Check the generator rotor for an open circuit.
(1) Using an ohmmeter, measure the resistance between the slip rings.
Standard resistance:
2.3 to 2.7 Ω at 20°C (68°F)
If the result is not as specified, replace the generator rotor assembly.

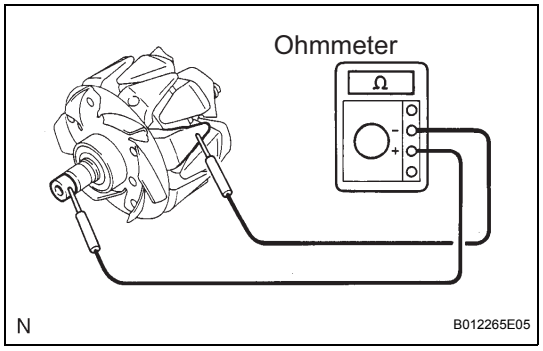

(c) Check the generator rotor for a short circuit.
(1) Using an ohmmeter, measure the resistance between the each slip ring and rotor.
Standard resistance:
1 MΩ or higher
If the result is not as specified, replace the generator rotor assembly.

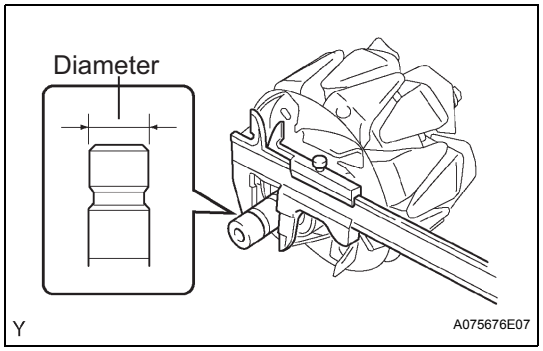

(d) Using vernier calipers, measure the slip ring diameter.
Standard diameter:
14.2 to 14.4 mm (0.559 to 0.567 in.)
Minimum diameter:
14.0 mm (0.551 in.)
If the diameter is less than the minimum, replace the generator rotor assembly.

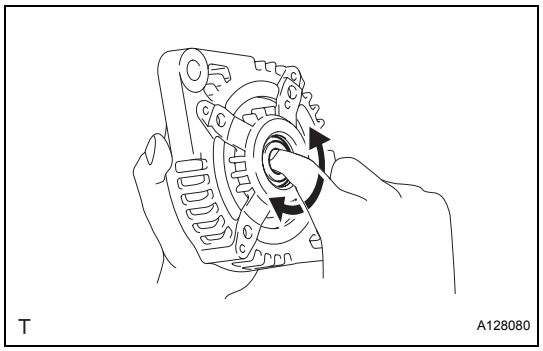

4. INSPECT GENERATOR DRIVE END FRAME BEARING
(a) Check the generator drive end frame bearing is not rough or worn.
If necessary, replace the generator drive end frame bearing.

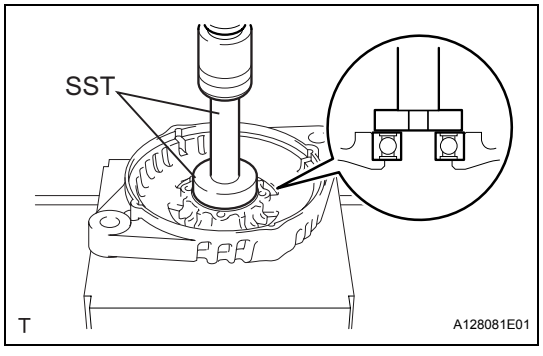

REASSEMBLY

1. INSTALL GENERATOR DRIVE END FRAME BEARING
(a) Using SST and a press, press in a new generator drive end frame bearing.
SST 09950-60010 (09951-00470), 09950-70010 (09951-07100)

CH

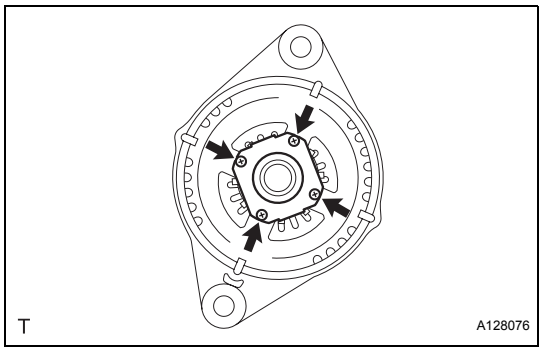

(b) Install the bearing retainer with the 4 screws.
Torque: 2.3 N*m (23 kgf*cm, 20 in.*lbf)

2. INSTALL GENERATOR ROTOR ASSEMBLY

(a) Install the generator rotor assembly and generator washer to the drive end frame.

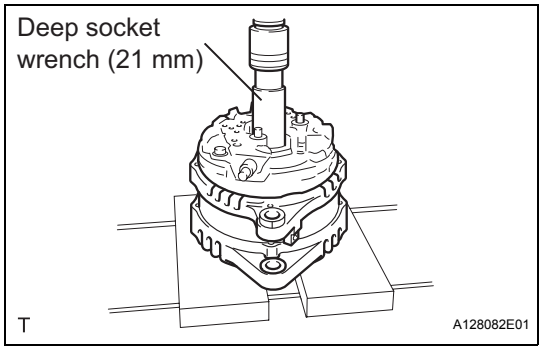

3. INSTALL GENERATOR COIL ASSEMBLY

(a) Using deep socket wrench (21 mm) and a press, slowly press in the generator coil assembly.

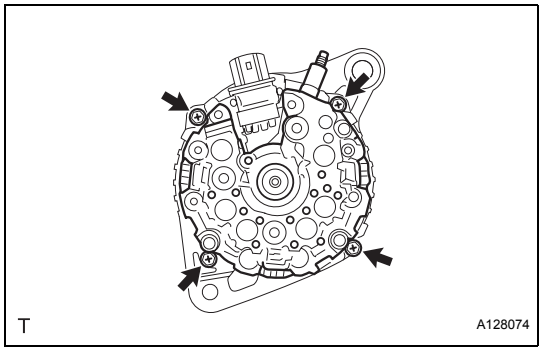

(b) Install the 4 bolts.
Torque: 5.8 N*m (59 kgf*cm, 51 in.*lbf)

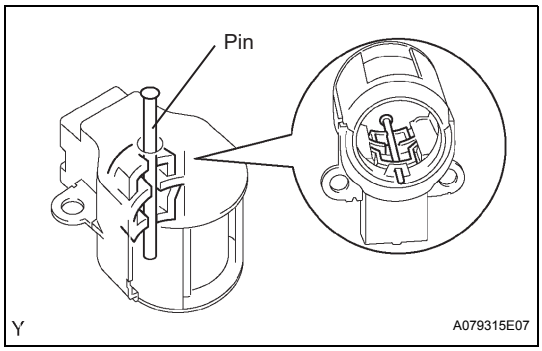

4. INSTALL GENERATOR BRUSH HOLDER ASSEMBLY

(a) While pushing the 2 brushes to the inside of the generator brush holder assembly, insert a ϕ1.0 mm (0.039 in.) pin into the generator brush holder hole.

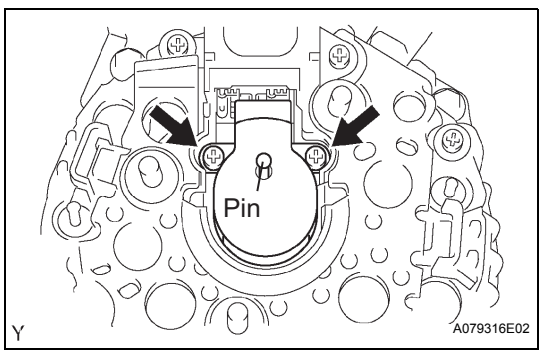

(b) Install the brush holder assembly with the 2 screws.
Torque: 1.8 N*m (18 kgf*cm, 16 in.*lbf)

(c) Remove the pin from the brush holder assembly.

CH

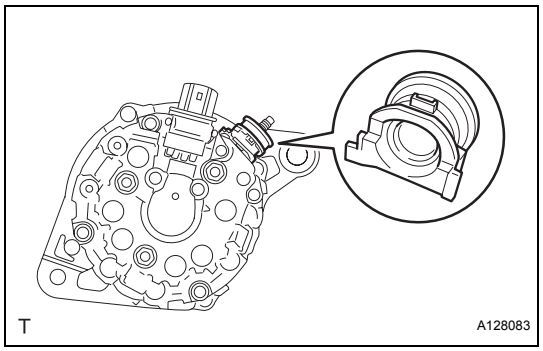

5. INSTALL TERMINAL INSULATOR

(a) Install the terminal insulator.

NOTICE:

Pay attention to installation direction of the terminal insulator.

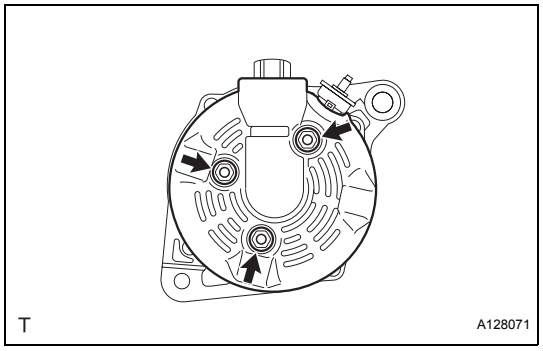

6. INSTALL GENERATOR REAR END COVER

(a) Install the end cover with the 3 nuts.

Torque: 4.6 N*m (47 kgf*cm, 41 in.*lbf)

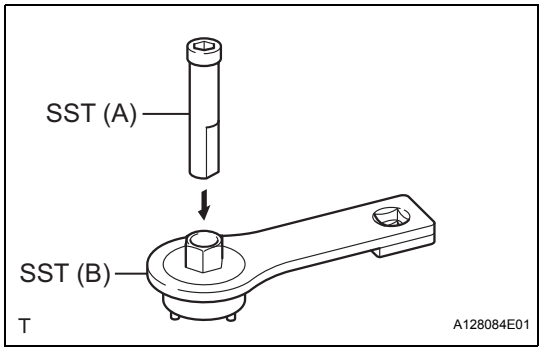

7. REMOVE GENERATOR WITH CLUTCH PULLEY

(a) Set SST (A) and (B).

SST 09820-63020

(1) Set the rotor shaft to SST (A).

(2) Mount SST (A) in a vise.

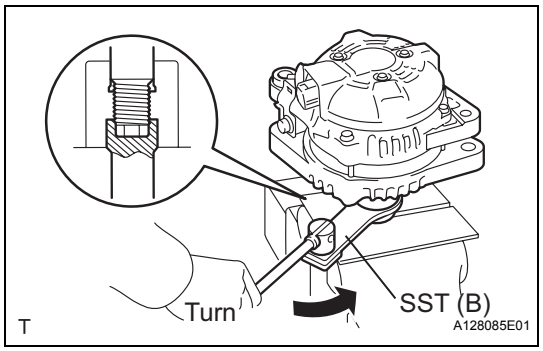

(b) Install the generator with the SST as shown in the illustration.

(c) Turn SST (B) counterclockwise, and tighten the generator pulley.

SST 09820-63020

Torque: 87 N*m (891 kgf*cm, 64 ft.*lbf)

NOTICE:

Use a torque wrench with a fulcrum length of 380 mm (14.96 in.).

(d) Remove the generator from the SST.

NOTICE:

Check that the generator pulley rotates smoothly.

(e) Install a new generator pulley cap.

CH

INSTALLATION

1. **INSTALL GENERATOR ASSEMBLY**
   (a) Install the bracket with the bolt.
   Torque: 20 N*m (204 kgf*cm, 15 ft.*lbf)
   (b) Install the wire harness clamp stay.
   Torque: 8.4 N*m (86 kgf*cm, 74 in.*lbf)
   (c) Install the generator assembly with the 2 bolts.
   Torque: 43 N*m (438 kgf*cm, 32 ft.*lbf)
   (d) Install the nut to the cylinder block.
   Torque: 20 N*m (204 kgf*cm, 15 ft.*lbf)
   (e) Connect the generator connector to the generator assembly.
   (f) Install the generator wire with the nut.
   Torque: 9.8 N*m (100 kgf*cm, 87 in.*lbf)
   (g) Install the terminal cap.
   (h) Connect the wire harness clamp.
2. **INSTALL FAN AND GENERATOR V BELT (See page EM-46)**
3. **INSTALL V-BANK COVER SUB-ASSEMBLY (See page FU-19)**
4. **CONNECT BATTERY NEGATIVE TERMINAL**
5. **PERFORM INITIALIZATION**
   (a) Some systems need initialization when disconnecting the battery terminal.

COOLING SYSTEM

ON-VEHICLE INSPECTION

1. INSPECT COOLING SYSTEM FOR LEAKS

CAUTION:

Do not remove the radiator cap while the engine and radiator are still hot. Pressurized, hot engine coolant and steam may be released and cause serious burns.

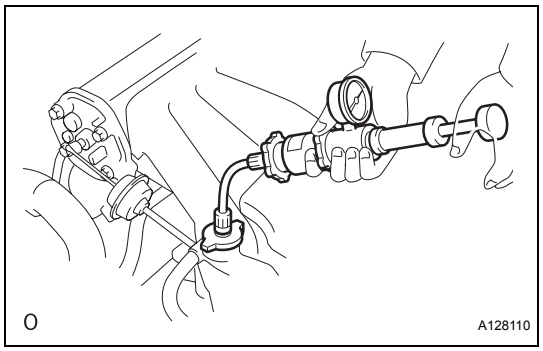

(a) Fill the radiator with coolant and attach a radiator cap tester.

(b) Warm up the engine.

(c) Using the radiator cap tester, increase the pressure inside the radiator to 118 kPa (1.2 kgf/cm^2, 17.1 psi), and check that the pressure does not drop.
If the pressure drops, check the hoses, radiator or water pump for leaks. If no external leaks are found, check the heater core, cylinder block and head.

2. CHECK ENGINE COOLANT LEVEL AT RESERVOIR

(a) The engine coolant level should be between the "LOW" and "FULL" lines when the engine is cold. If low, check for leaks and add "TOYOTA Super Long Life Coolant" or similar high quality ethylene glycol based non-silicate, non-amine, non-nitrite, and non-borate coolant with long-life hybrid organic acid technology up to the "FULL" line.

3. CHECK ENGINE COOLANT QUALITY

(a) Remove the radiator cap.
CAUTION:
Do not remove the radiator cap while the engine and radiator are still hot. Pressurized, hot engine coolant and steam may be released and cause serious burns.

(b) Check if there are any excessive deposits of rust or scale around the radiator cap and radiator filler hole. Also, the coolant should be free from oil.
HINT:
If excessively dirty, replace the coolant.

(c) Reinstall the radiator cap.

INSPECTION

1. INSPECT RADIATOR CAP SUB-ASSEMBLY

NOTICE:

- **If the reservoir cap is contaminated , always rinse it with water.**
- **Before using a radiator cap tester, wet the relief valve and pressure valve with engine coolant or water.**
- **When performing procedures "A" and "B" below, keep the tester at an angle of over 30° above the horizontal.**

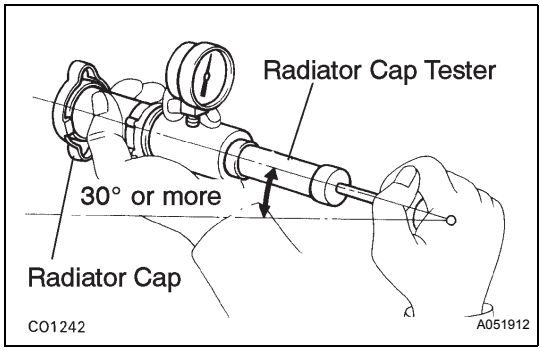

(a) Using a radiator cap tester, slowly pump the tester and check that air is being released from the vacuum valve (Procedure "A").

Pump speed:

1 push every 3 seconds or more

NOTICE:

Push the pump at a constant speed.

If air is not being released from the vacuum valve, replace the reservoir cap.

(b) Pump the tester and measure the relief valve opening pressure (Procedure "B").

Pump speed:

1 push within 1 second

NOTICE:

The pump speed above should be followed for the first pump only. If will close the vacuum valve. Once the vacuum valve is closed, the pump speed can be reduced.

Standard opening pressure:

69.0 to 112.8 kPa (0.70 to 1.15 kgf/cm^2, 10.0 to 16.4 psi)

HINT:

Use the tester's maximum reading as the opening pressure. If the maximum reading is less than the minimum opening pressure above, replace the radiator cap.

CO

COOLING FAN SYSTEM

PARTS LOCATION

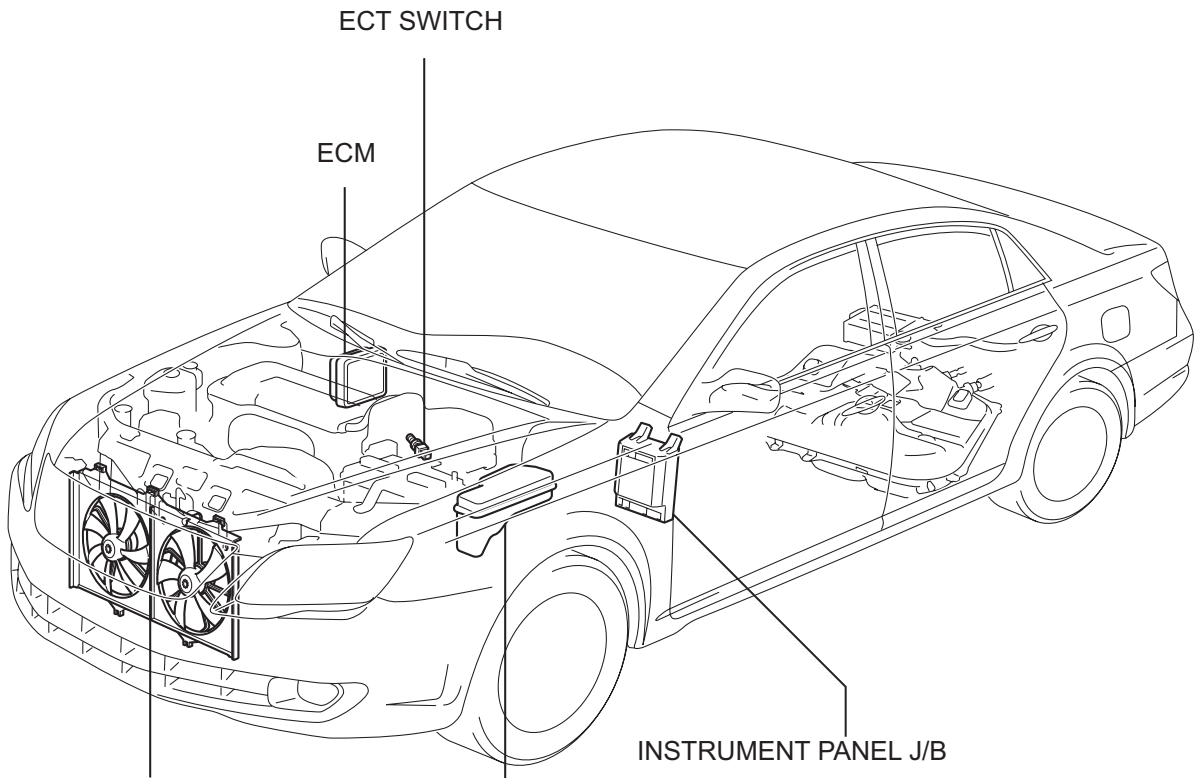

C

A114588E01

CO

SYSTEM DIAGRAM

The electric cooling fan system controls the fan motors using the Engine Coolant Temperature (ECT) switch, and turns the fan relay on and off according to the ECT and the air conditioner's operating condition.

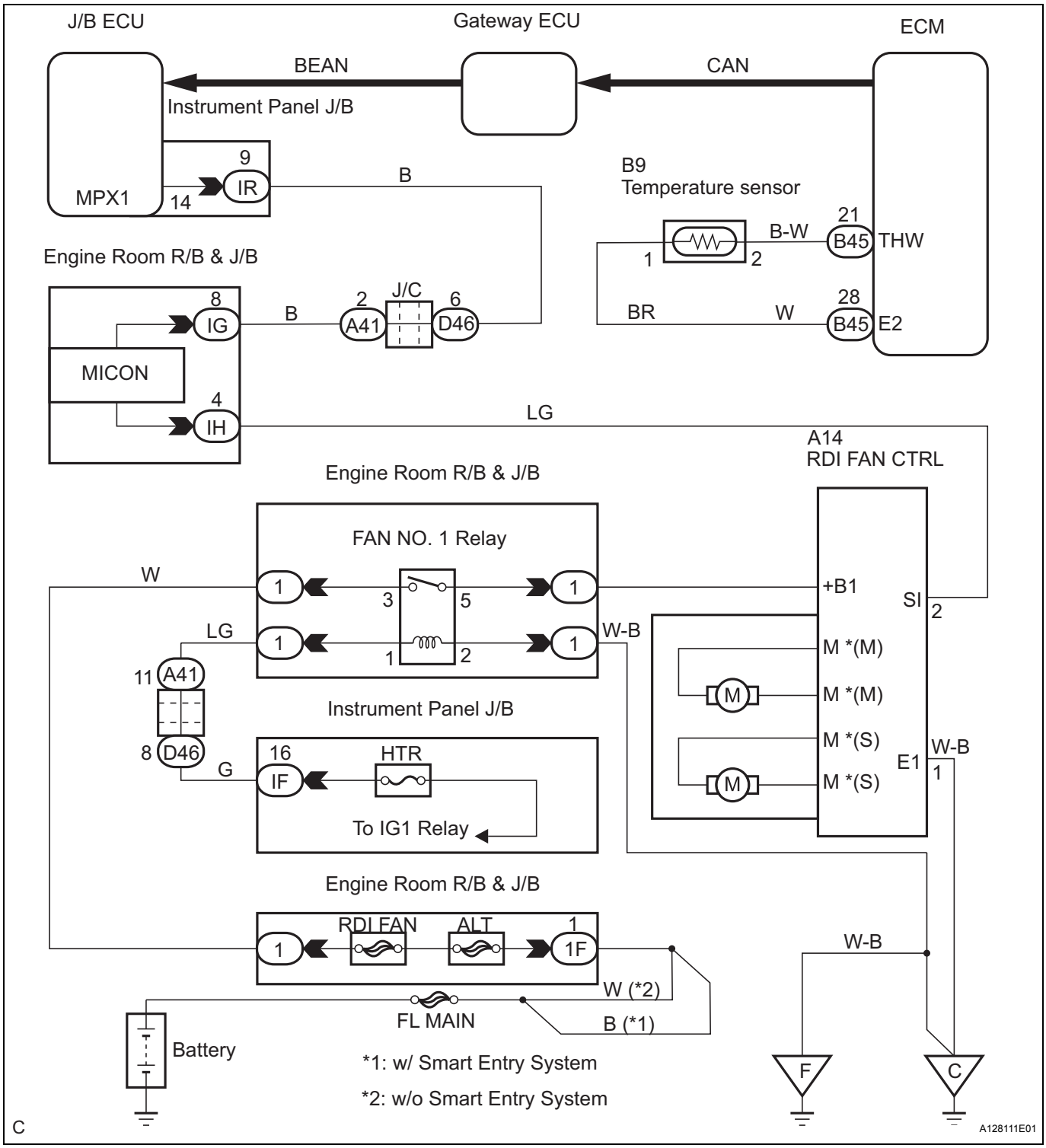

ON-VEHICLE INSPECTION

HINT:
The cooling fan may rotate when the ignition switch is turned from on (IG) to on (ACC), or from on (ACC) to on (IG). This is normal.

1. CHECK COOLING FAN OPERATION WITH LOW TEMPERATURE

(a) Turn the ignition switch on (IG).
(b) Check that the cooling fan stops.
If not, check the cooling fan relay and ECT switches, and check for disconnected connectors or wire breaks between the cooling fan relay and ECT switches.
(c) Disconnect the ECT switch No.1 connector.
(d) Connect the terminals on the ECT switch No.1 connector.
(e) Check that the No.1 cooling fan rotates at a high speed.
If not, check the No. 1 cooling fan relay and No.1 cooling fan.
(f) Reconnect the ECT switch No.1 connector.
(g) Disconnect the ECT switch No.2 connector.
(h) Ground the terminal on the ECT switch No.2 wire harness side connector.
(i) Check that the No.1 and No.2 cooling fans rotate at a low speed.
If not, check the No.2 cooling fan relay, No.3 cooling fan relay and No.2 cooling fan.
(j) Reconnect the ECT switch No.2 connector.

2. CHECK COOLING FUN

(a) Disconnect the cooling fan connector.
(b) Connect battery and ammeter to the cooling fan connector.
(c) Check that the cooling fan rotates smoothly, and check the reading on the ammeter.
Standard amperage:
8.0 to 12.0 A at 20°C (68°F)
If not, replace the cooling fan.
(d) Reconnect the cooling fan connector.

INSPECTION

1. INSPECT RELAY

(a) Check the resistance of the relay.

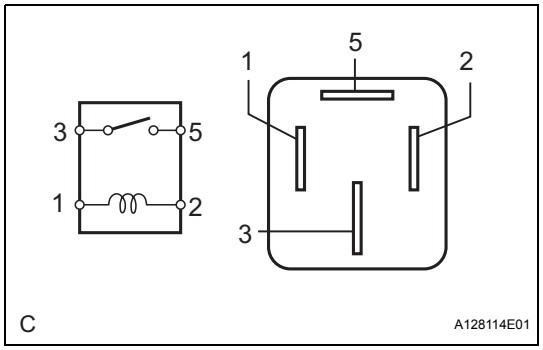

Resistance

Tester Connection	Specified Condition
3-5	10 kΩ or higher

Tester Connection	Specified Condition
3-5	Below 1 Ω (when battery voltage is applied to terminals 1 and 2)

If the result is not as specified, replace the relay.

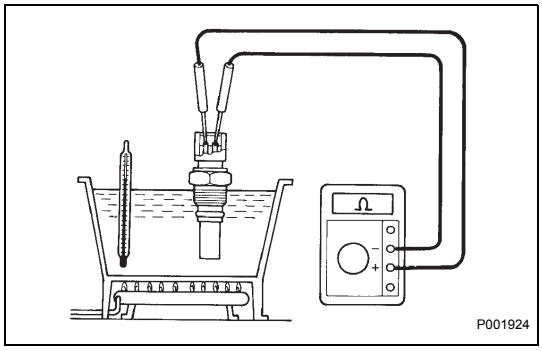

2. INSPECT ECT SWITCH

(a) Check the resistance.

Resistance

Temperature	Specified Condition
Above 98°C (208°F)	Below 1 Ω
Below 88°C (190°F)	10 kΩ or higher

If the result is not as specified, replace the switch.

NOTICE:

When checking the ECT switch in the water, the terminals should be kept dry. After the check, dry the switch.

COOLANT

REPLACEMENT

1. DRAIN ENGINE COOLANT

(a) Remove the radiator cap.

CAUTION:
Do not remove the radiator cap while the engine and radiator are still hot. Pressurized, hot engine coolant and steam may be released and cause serious burns.

(b) Drain engine coolant by loosening the radiator drain cock plug and the engine's cylinder block drain cock plug.

HINT:
Engine coolant inside the radiator is drained from the drain hole located on the bottom of the engine under cover.

(c) Tighten the cylinder block drain cock plugs.

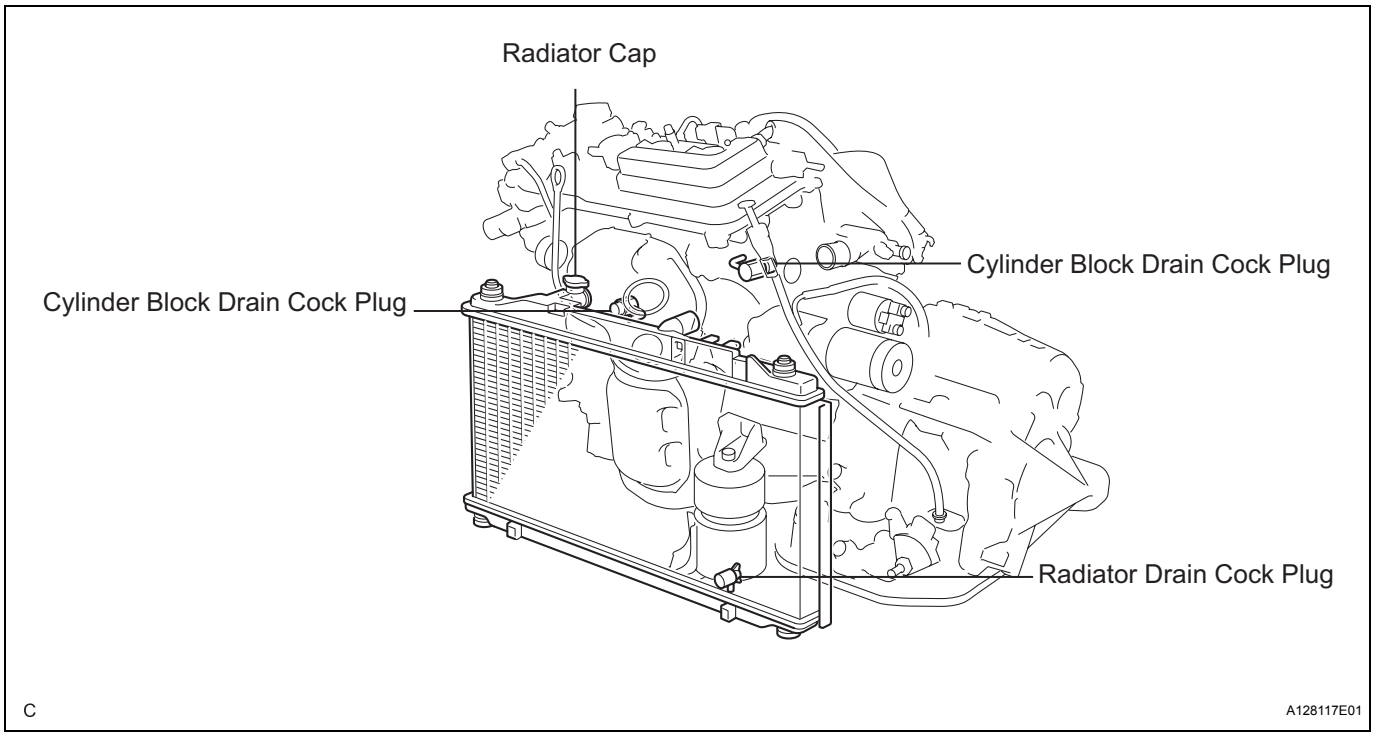

Torque: 13 N*m (130 kgf*cm, 10 ft.*lbf)

2. ADD ENGINE COOLANT

(a) Tighten the radiator drain plug (Procedure "A").

(b) Add engine coolant into the radiator until it overflows (Procedure "B").

Capacity:
8.3 liters (8.8 US qts, 7.3Imp. qts)

HINT:

- Use of improper coolants may damage the engine cooling system.

- Only use "TOYOTA Super Long Life Coolant" or similar high quality ethylene glycol based non-silicate, non-amine, non-nitrite, and non-borate coolant with long-life hybrid organic acid technology.
- New TOYOTA vehicles are filled with TOYOTA Super Long Life Coolant (color is pink, premixed ethylene-glycol concentration is approximately 50% and freezing temperature is -35%°C (-31°F)). When replacing the coolant, TOYOTA Super Long Life Coolant is recommended.
- Observe the coolant level inside the radiator by pressing the inlet and outlet radiator hoses several times by hand. If the coolant level goes down, add the coolant.

NOTICE:
Do not use plain water alone.

(c) Pour coolant into the radiator reservoir tank until the coolant reaches the full line (Procedure "C").
(d) Install the radiator cap (Procedure "D").
(e) Warm up the engine (Procedure "E").
HINT:
As the engine warms up, press the inlet and outlet radiator hoses several times by hand.
(f) Stop the engine and wait until the coolant cools down to room temperature (Procedure "F").
(g) Remove the radiator cap and check the coolant level inside the radiator (Procedure "G").
If the coolant level is below the full level, repeat procedure "C" to "G" until the coolant level. If it is below the full line, add coolant.

3. CHECK ENGINE COOLANT LEAKS

(a) Fill the radiator with coolant and attach a radiator cap tester.
(b) Pump it to 118 kPa (1.2 kgf/cm^2, 17.1 psi) and check leakage.

WATER PUMP

COMPONENTS

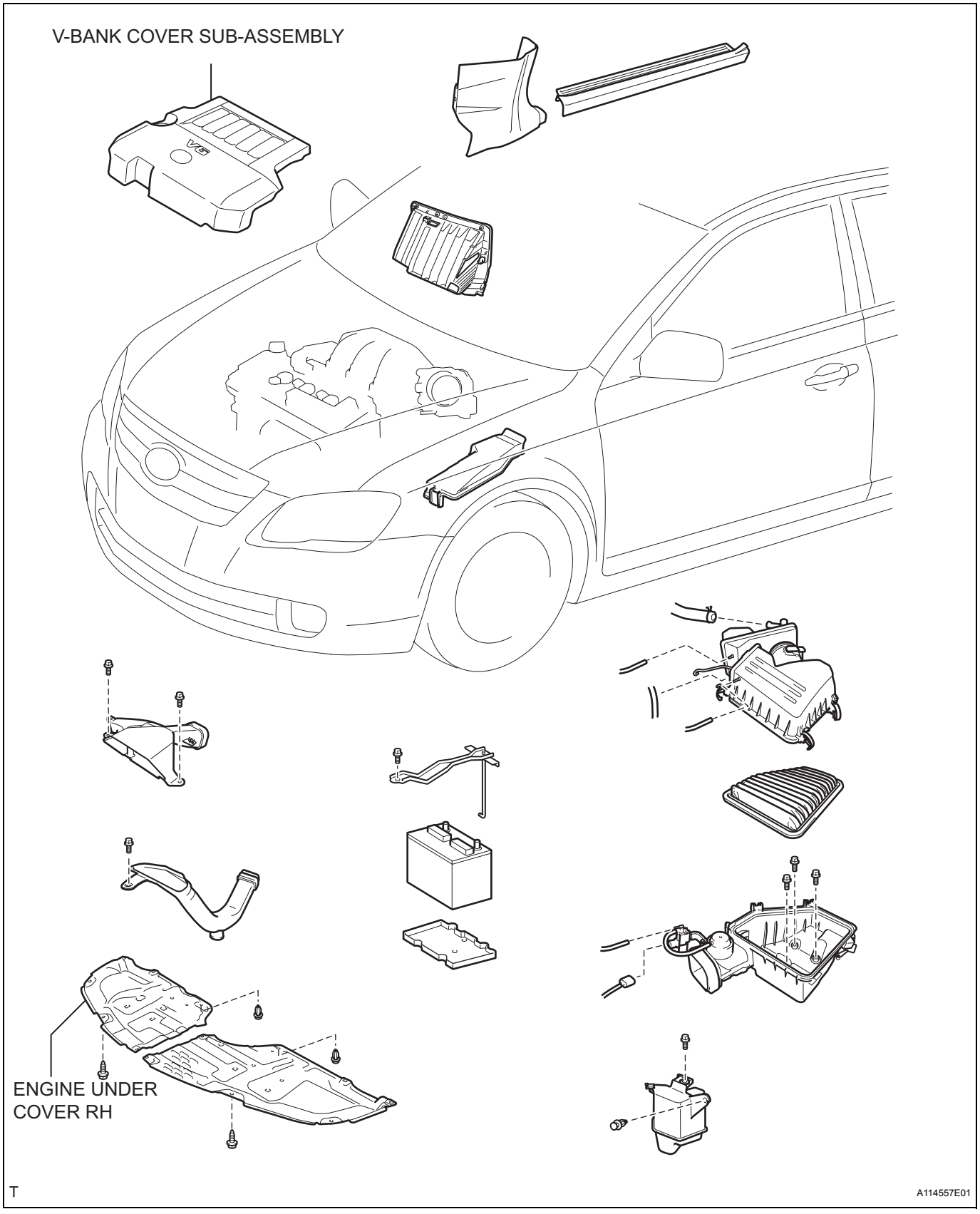

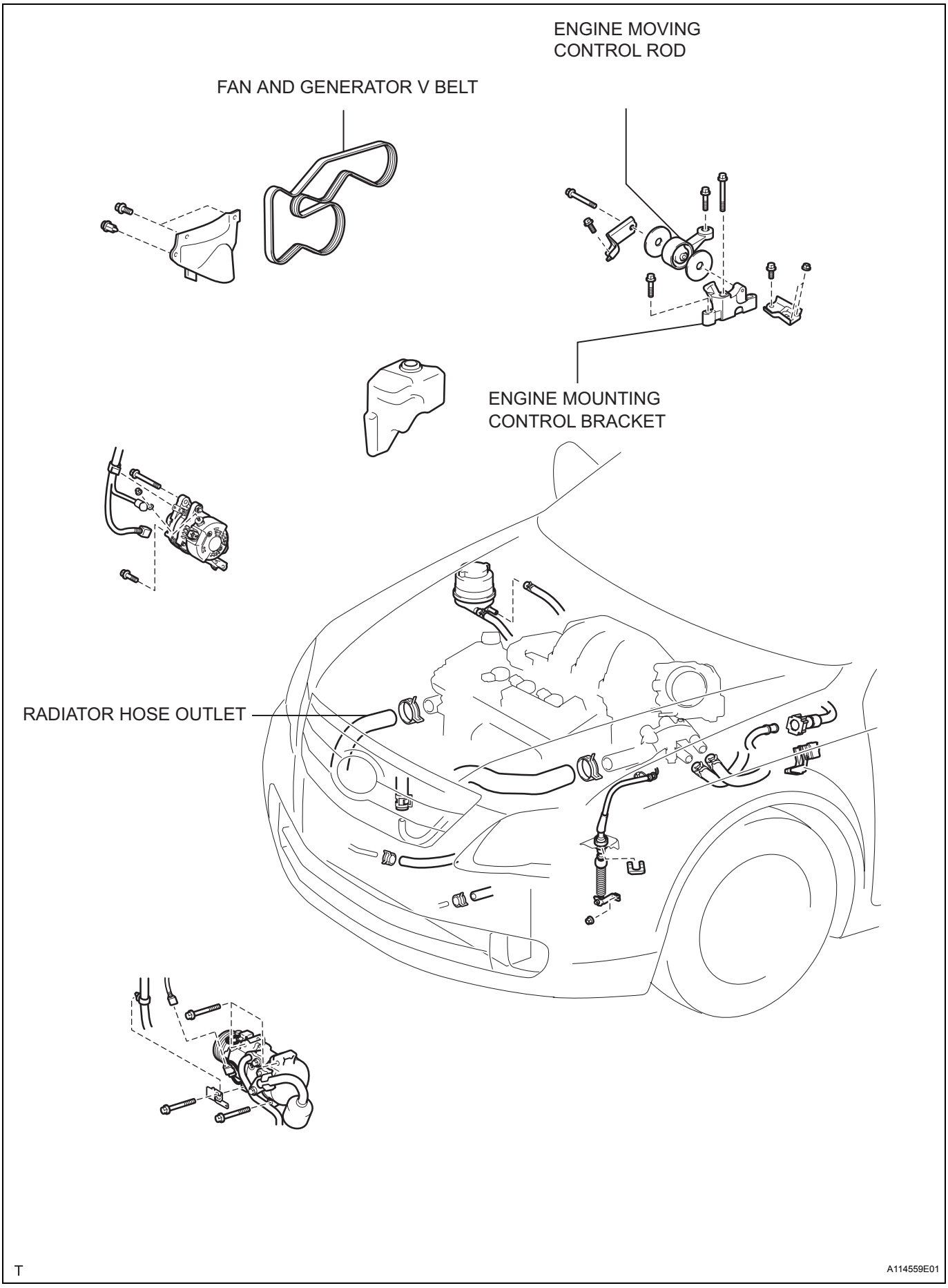
ENGINE MOVING
CONTROL ROD
FAN AND GENERATOR V BELT
ENGINE MOUNTING
CONTROL BRACKET
RADIATOR HOSE OUTLET
T
A114559E01

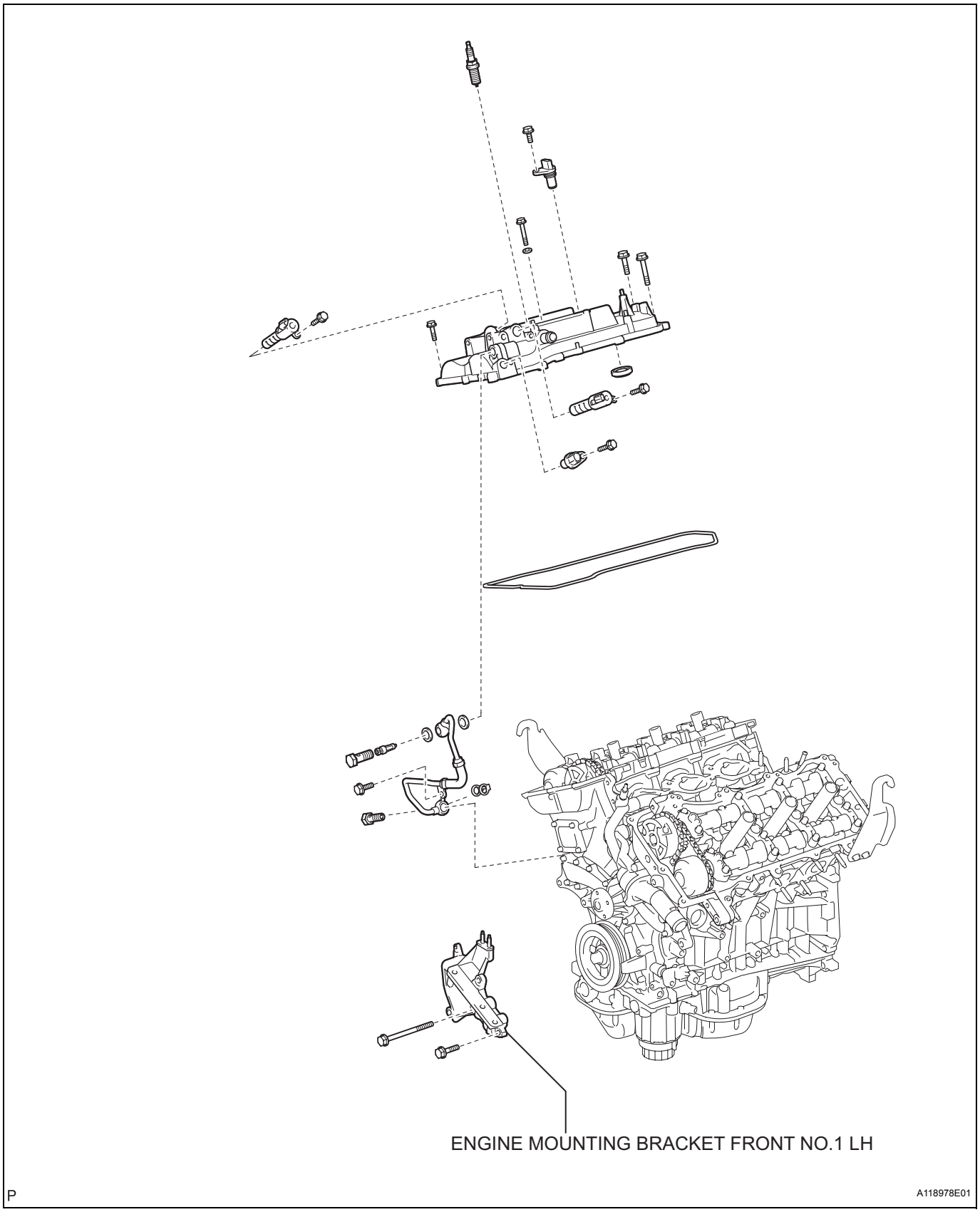
ENGINE MOUNTING BRACKET FRONT NO.1 LH
P
A118978E01

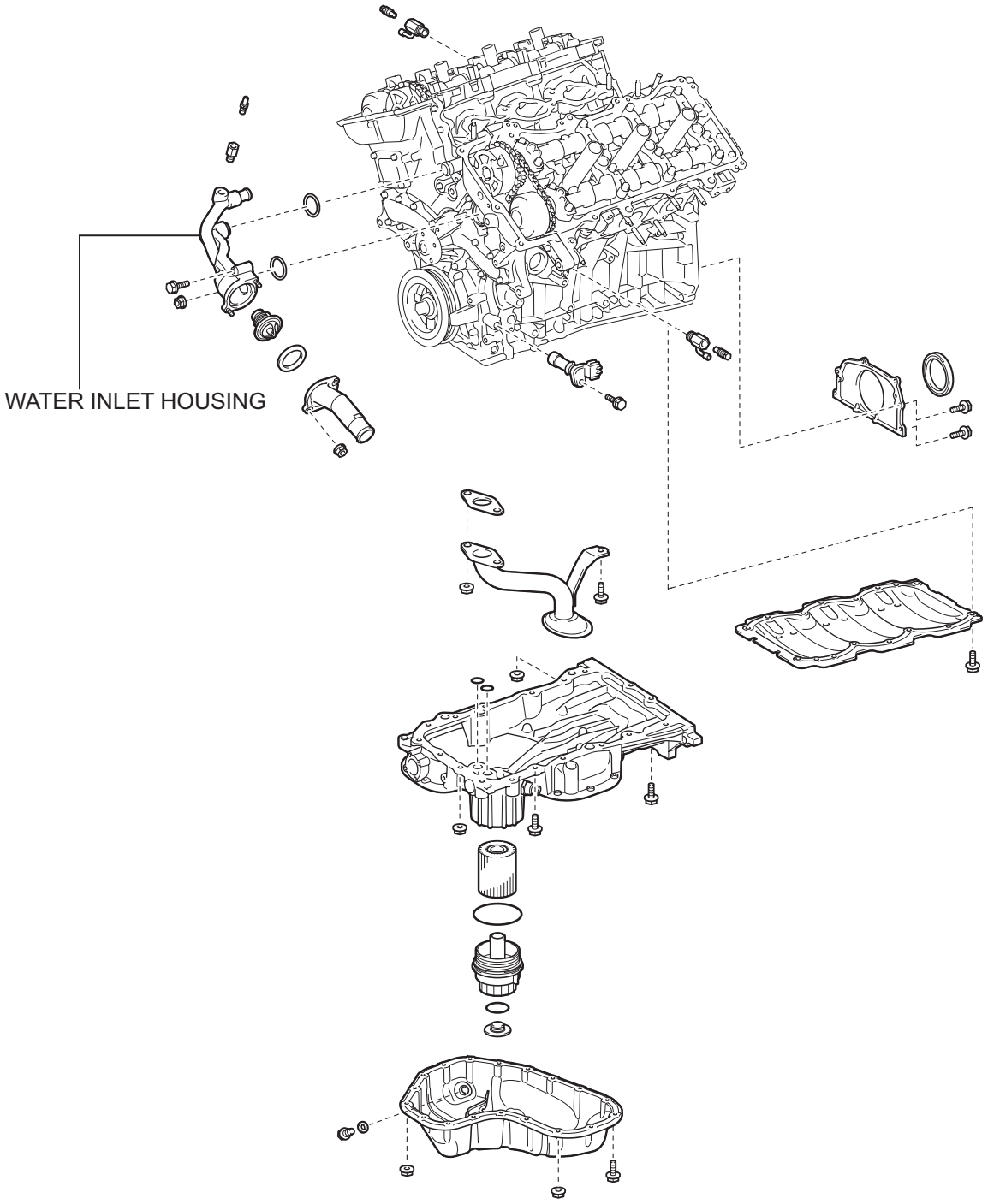

CO

P

A114566E01

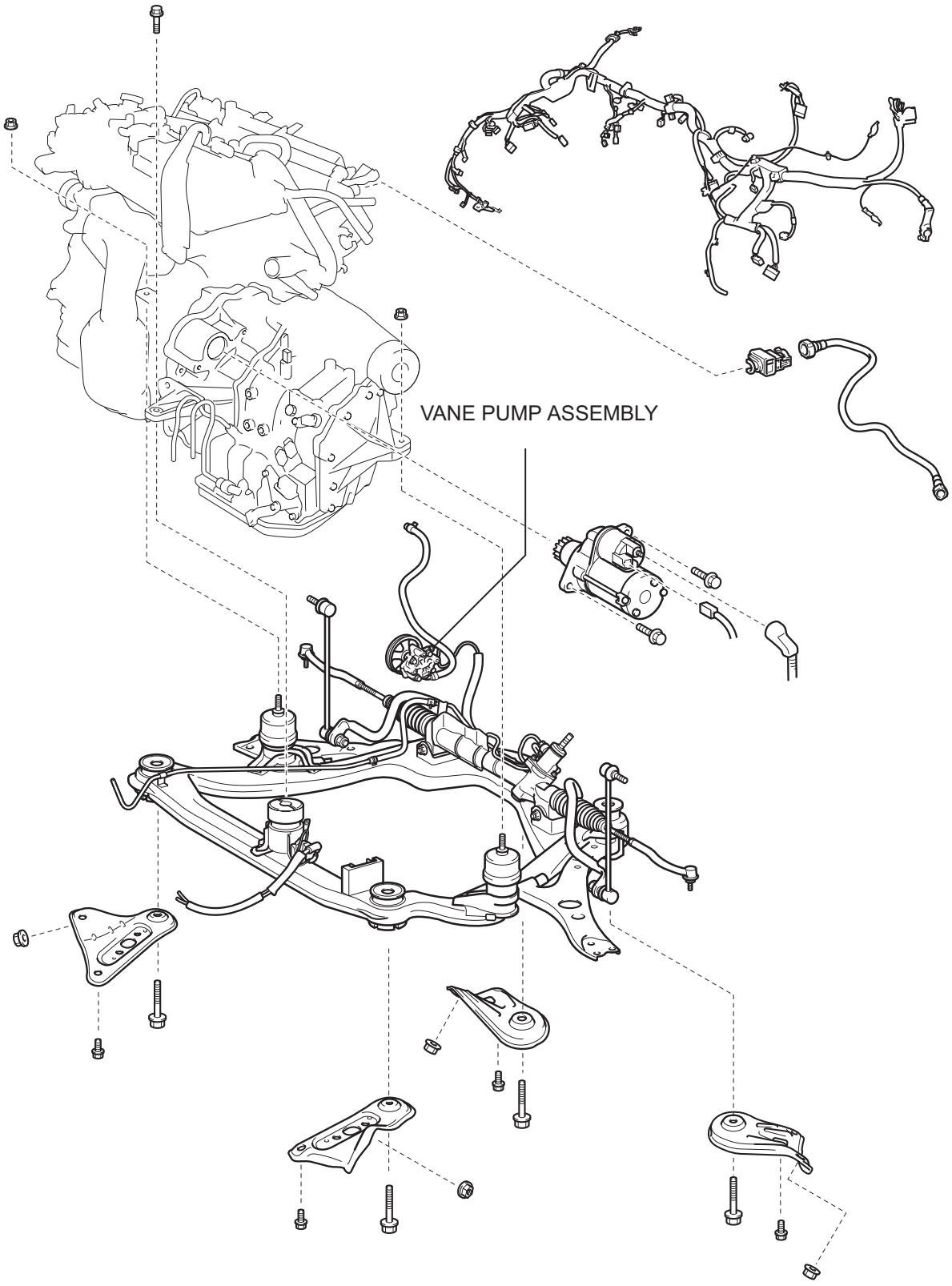

T

A114561E01

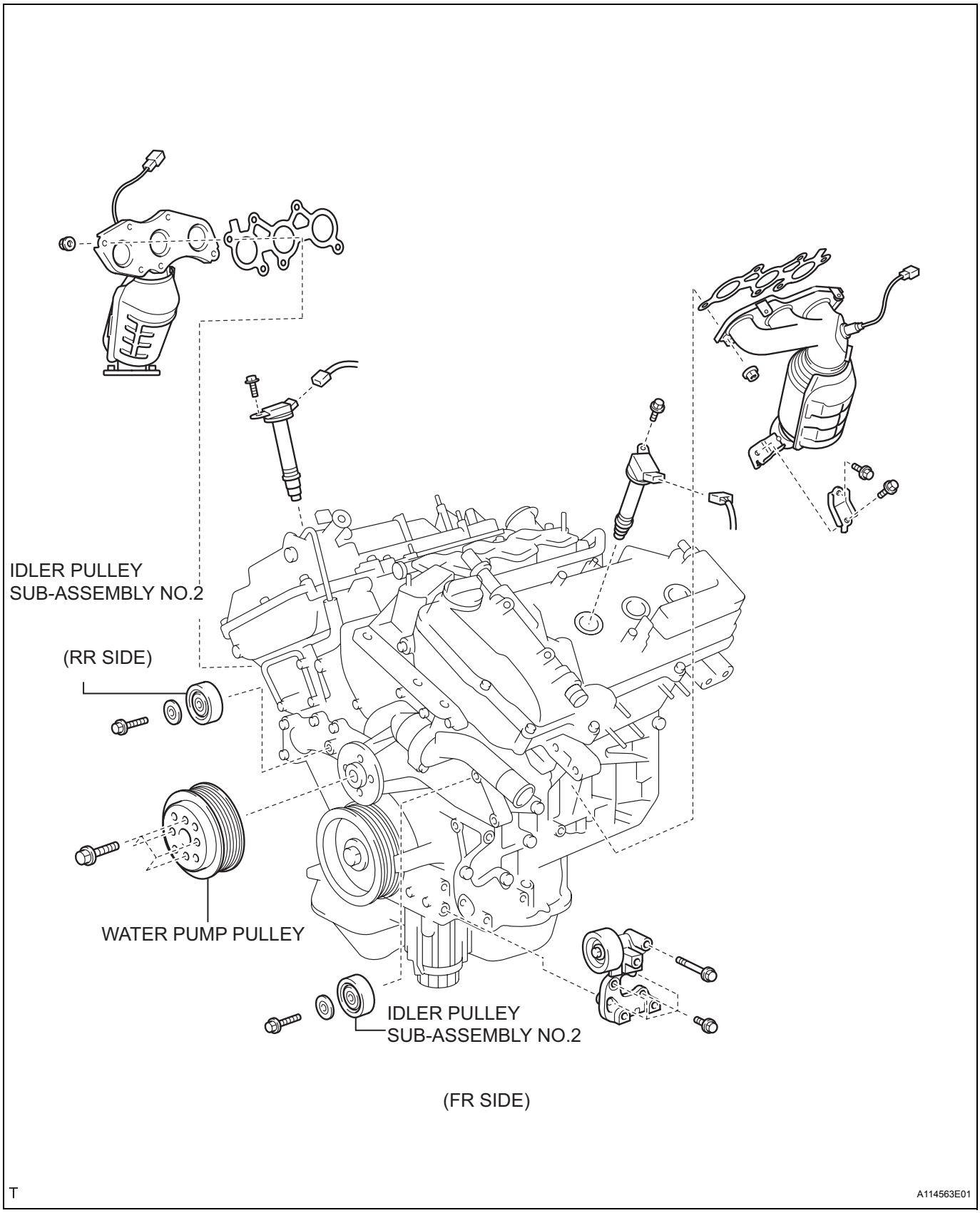
IDLER PULLEY
SUB-ASSEMBLY NO.2
(RR SIDE)
WATER PUMP PULLEY
IDLER PULLEY
SUB-ASSEMBLY NO.2
(FR SIDE)
T
A114563E01

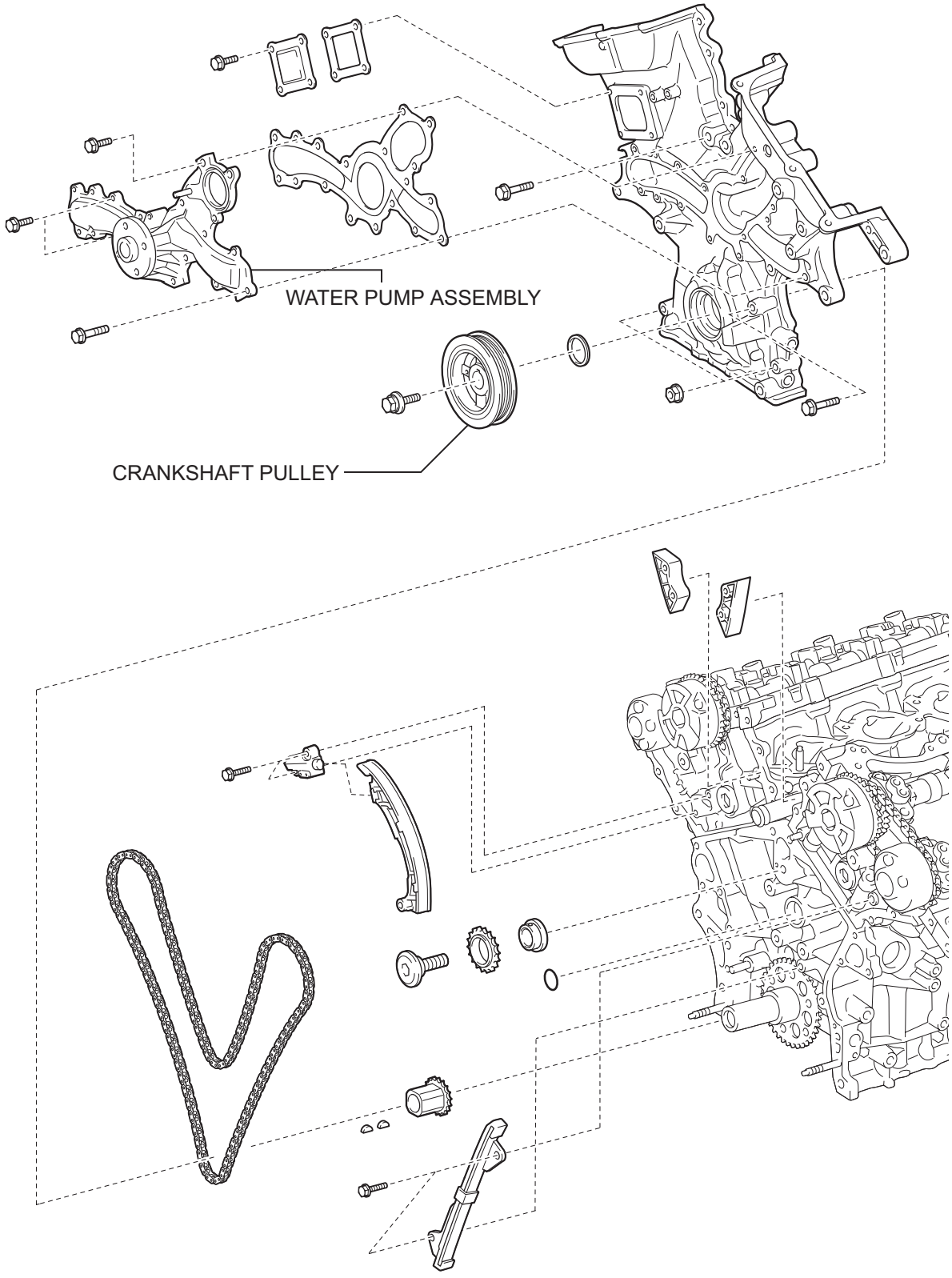

CO

P

A114567E01

REMOVAL

1. **DRAIN ENGINE COOLANT**
2. **REMOVE FRONT WHEEL RH**
3. **REMOVE ENGINE UNDER COVER RH**
4. **REMOVE V-BANK COVER SUB-ASSEMBLY**
5. **REMOVE ENGINE MOVING CONTROL ROD**
6. **REMOVE ENGINE MOUNTING CONTROL BRACKET**
7. **REMOVE ENGINE MOUNTING BRACKET FRONT NO.1 LH**
8. **REMOVE FAN AND GENERATOR V BELT**
9. **SEPARATE RADIATOR HOSE OUTLET**
   (a) Separate the radiator hose outlet.

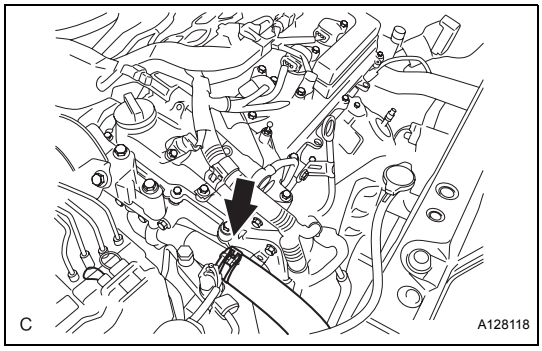

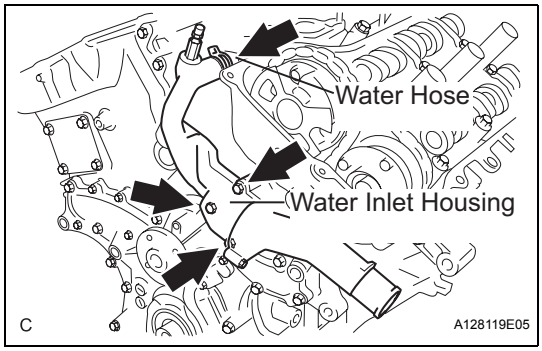

10. **REMOVE WATER INLET HOUSING**
    (a) Separate the water hose.
    (b) Remove the 2 bolts, nut and water inlet housing.

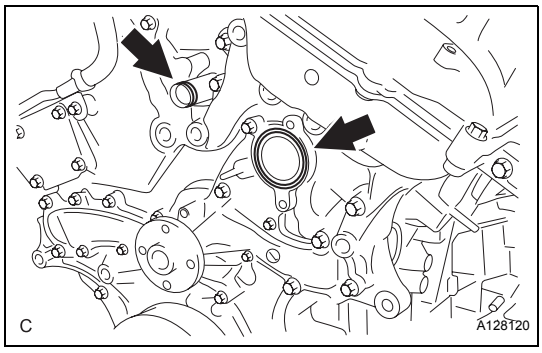

    (c) Remove the water inlet housing gasket No.1 and water outlet pipe O-ring.

11. **REMOVE CRANKSHAFT PULLEY**
    SST 09213-70011 (09213-70020), 09330-00021, 09950-50013 (09951-05010, 09952-05010, 09953-05020, 09954-05021)

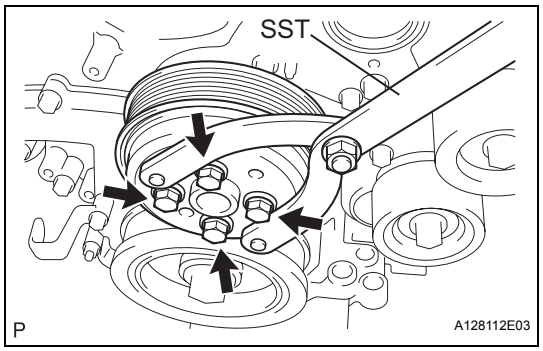

12. REMOVE WATER PUMP PULLEY

(a) Using SST, hold the water pump pulley.
SST 09960-10010 (09962-01000, 09963-00700)

(b) Remove the 4 bolts and water pump pulley.

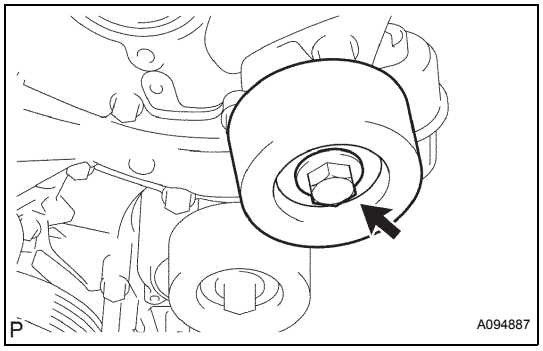

13. REMOVE IDLER PULLEY SUB-ASSEMBLY NO.2

(a) Remove the bolt, idler pulley cover plate No.2 and idler pulley sub-assembly No.2.

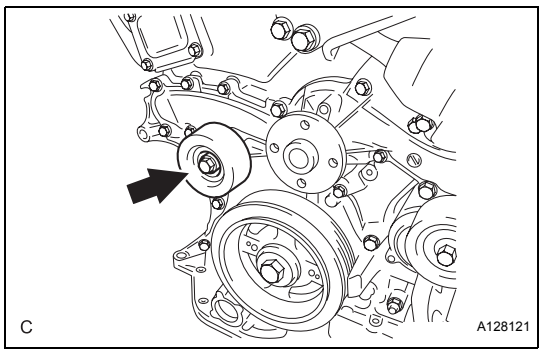

(b) Remove the bolt, idler pulley cover plate No.2 and idler pulley sub-assembly No.2.

CO

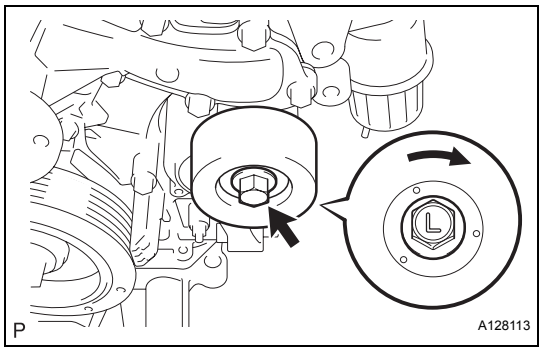

(c) Remove the bolt and idler pulley.
NOTICE:
Be careful when loosening the bolt because it is left-hand threaded.

14. SEPARATE VANE PUMP ASSEMBLY

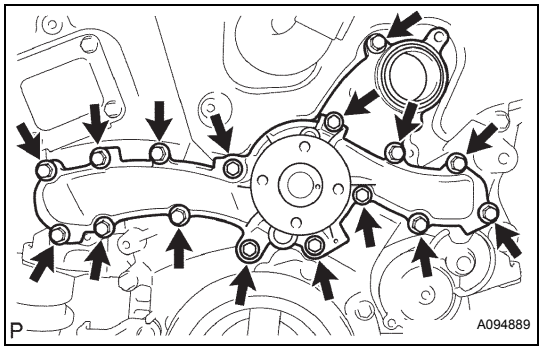

15. REMOVE WATER PUMP ASSEMBLY

(a) Remove the 16 bolts, water pump assembly and water pump gasket.

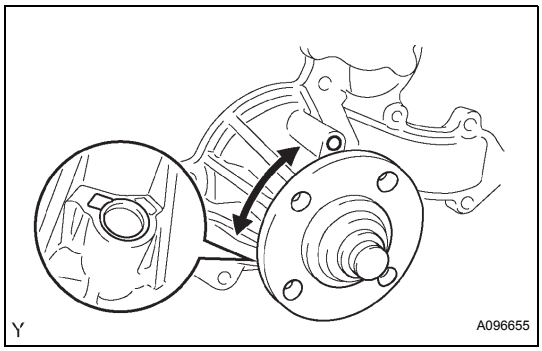

INSPECTION

1. INSPECT WATER PUMP ASSEMBLY

(a) Visually check, the drain hole for coolant leakage.

(b) Turn the pulley, and check that the water pump bearing moves smoothly and noiselessly.
If the bearing moves roughly or noisily, replace the water pump.

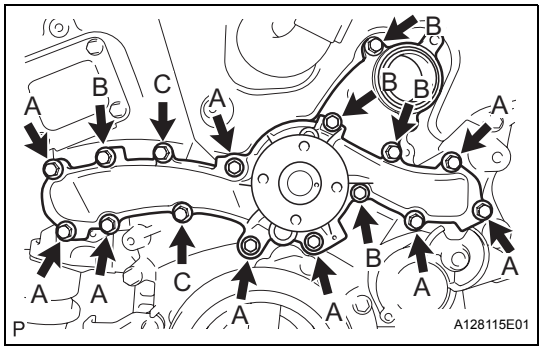

INSTALLATION

1. INSTALL WATER PUMP ASSEMBLY

(a) Install a new water pump gasket and the water pump assembly with the 16 bolts.
Torque: Bolt A
21 N*m (214 kgf*cm, 15 ft.*lbf)
Bolts B and C
9.1 N*m (93 kgf*cm, 81 in.*lbf)
NOTICE:
- **Make sure that there is no oil on the threads of the A bolts.**
- **Be sure to replace the 2 C bolts with new ones or reuse them after applying adhesive 1344.**
Adhesive:
Part No. 08833-00080, THREE BOND 1344 or equivalent

2. INSTALL VANE PUMP ASSEMBLY

3. INSTALL IDLER PULLEY SUB-ASSEMBLY NO.2

(a) Install the idler pulley with the bolt.
NOTICE:
Be careful when tightening the bolt because it is left-hand threaded.
Torque: 43 N*m (438 kgf*cm, 32 ft.*lbf)

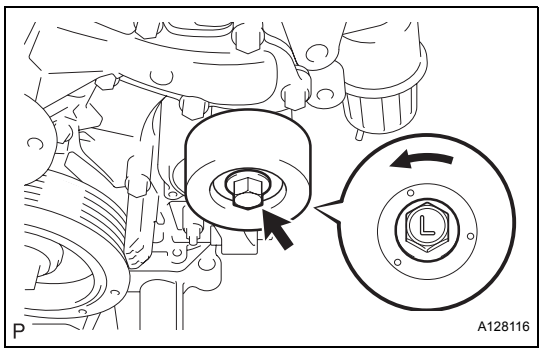

(b) Install the idler pulley cover plate No.2 and idler pulley sub-assembly No.2 with the bolt.
Torque: 43 N*m (438 kgf*cm, 32 ft.*lbf)

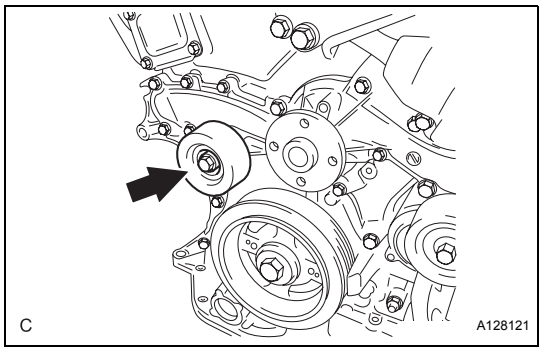

CO

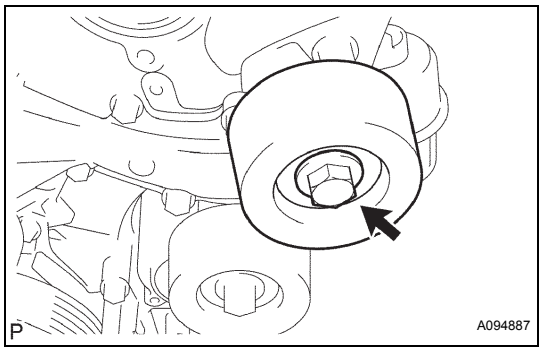

(c) Install the idler pulley cover plate No.2 and idler pulley sub-assembly No.2 with the bolt.
Torque: 43 N*m (438 kgf*cm, 32 ft.*lbf)

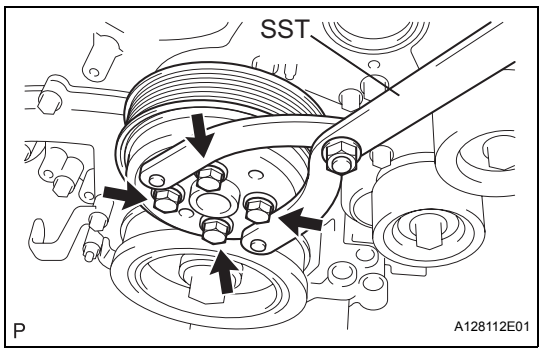

4. INSTALL WATER PUMP PULLEY
(a) Temporarily install the water pump pulley with the 4 bolts.
(b) Using SST, hold the water pump pulley.
SST 09960-10010 (09962-01000, 09963-00700)
(c) Tighten the 4 bolts.
Torque: 21 N*m (214 kgf*cm, 15 ft.*lbf)

5. INSTALL CRANKSHAFT PULLEY
SST 09213-70011 (09213-70020), 09330-00021, 09950-50013 (09951-05010, 09952-05010, 09953-05020, 09954-05021)

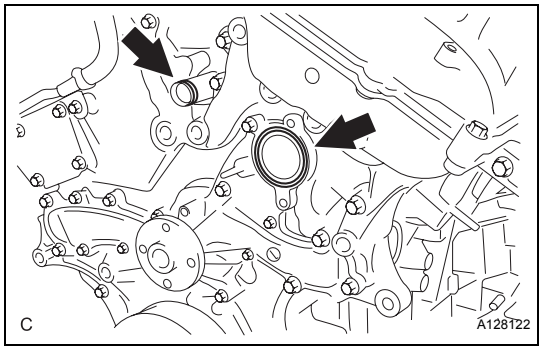

6. INSTALL WATER INLET HOUSING
(a) Install a new water inlet housing No.1 gasket and water outlet pipe O-ring.

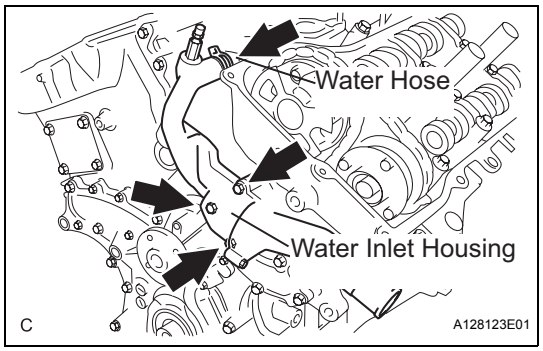

(b) Install the water inlet with the 2 bolts and nut.
Torque: 10 N*m (102 kgf*cm, 7 ft.*lbf)
NOTICE:
Be careful not to allow the O-ring to get caught between the parts.
(c) Install the water hose.

7. INSTALL RADIATOR HOSE OUTLET
(a) Install the radiator hose outlet.

8. INSTALL FAN AND GENERATOR V BELT

9. INSTALL ENGINE MOUNTING BRACKET FRONT NO.1 LH

10. INSTALL ENGINE MOUNTING CONTROL BRACKET

11. INSTALL ENGINE MOVING CONTROL ROD

12. INSTALL V-BANK COVER SUB-ASSEMBLY

13. ADD ENGINE COOLANT

14. CHECK FOR ENGINE COOLANT LEAKS

15. INSTALL ENGINE UNDER COVER RH

16. INSTALL FRONT WHEEL RH

THERMOSTAT

COMPONENTS

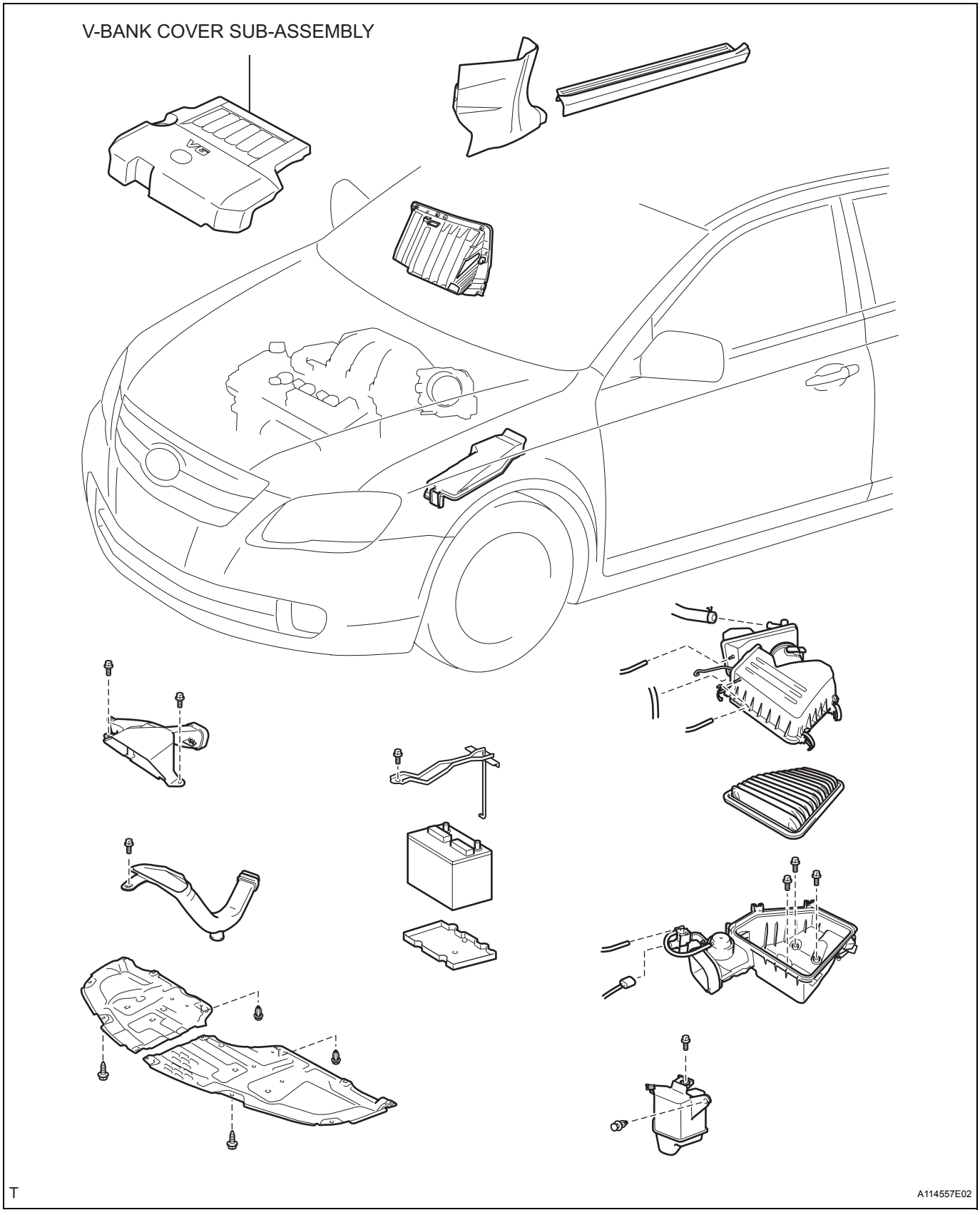

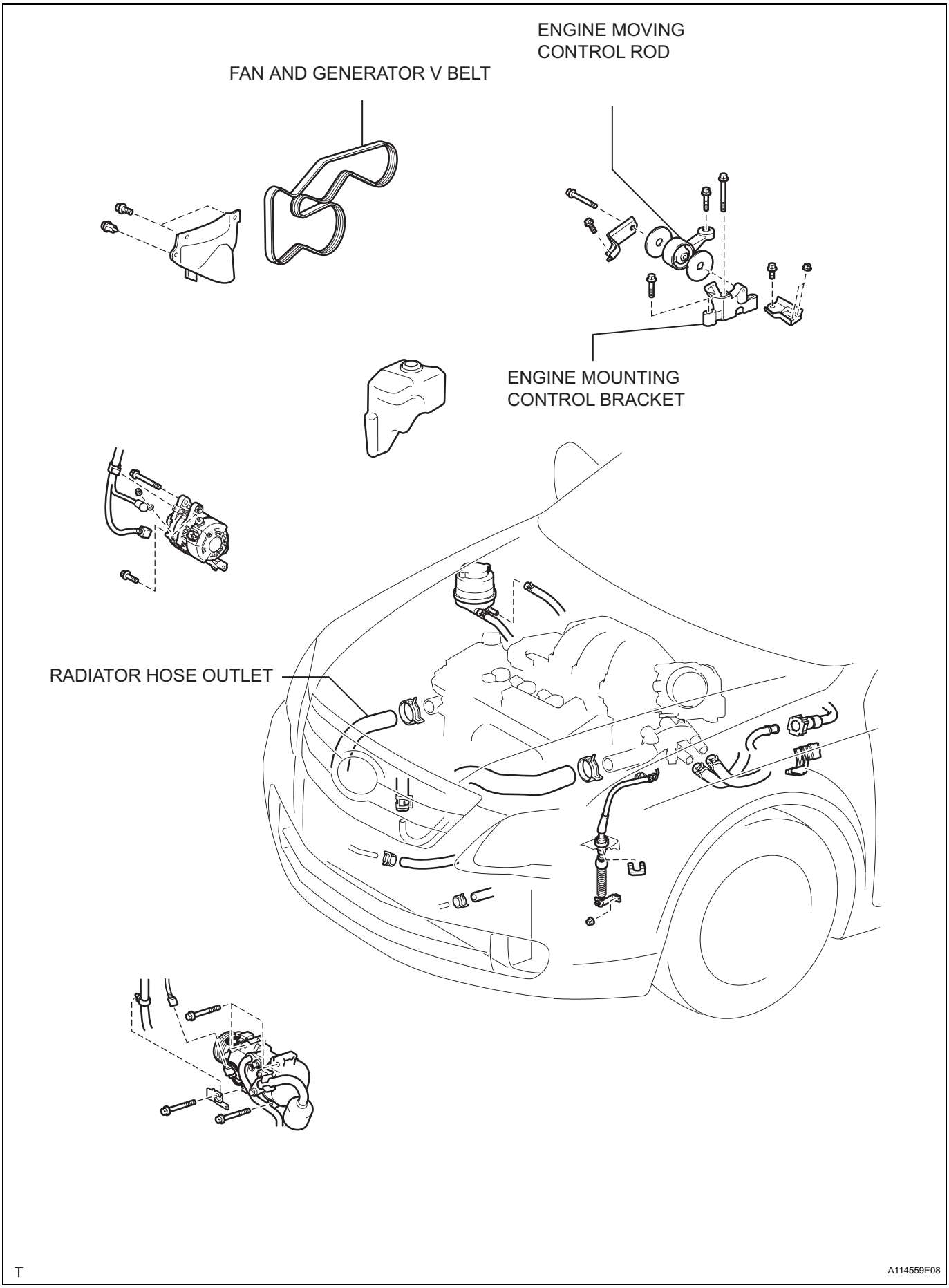
ENGINE MOVING
CONTROL ROD
FAN AND GENERATOR V BELT
ENGINE MOUNTING
CONTROL BRACKET
RADIATOR HOSE OUTLET
A114559E08

T

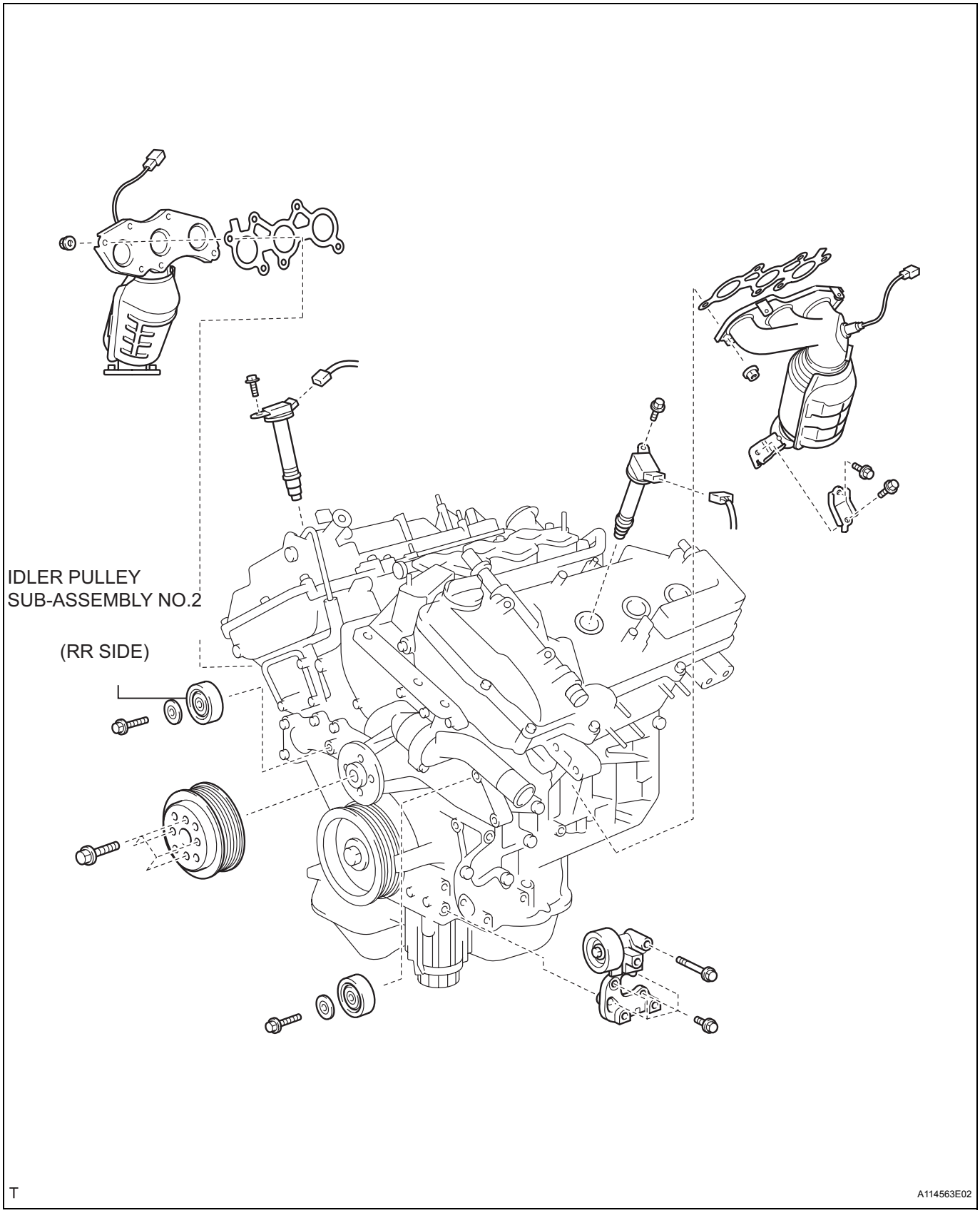
IDLER PULLEY
SUB-ASSEMBLY NO.2
(RR SIDE)
T
A114563E02

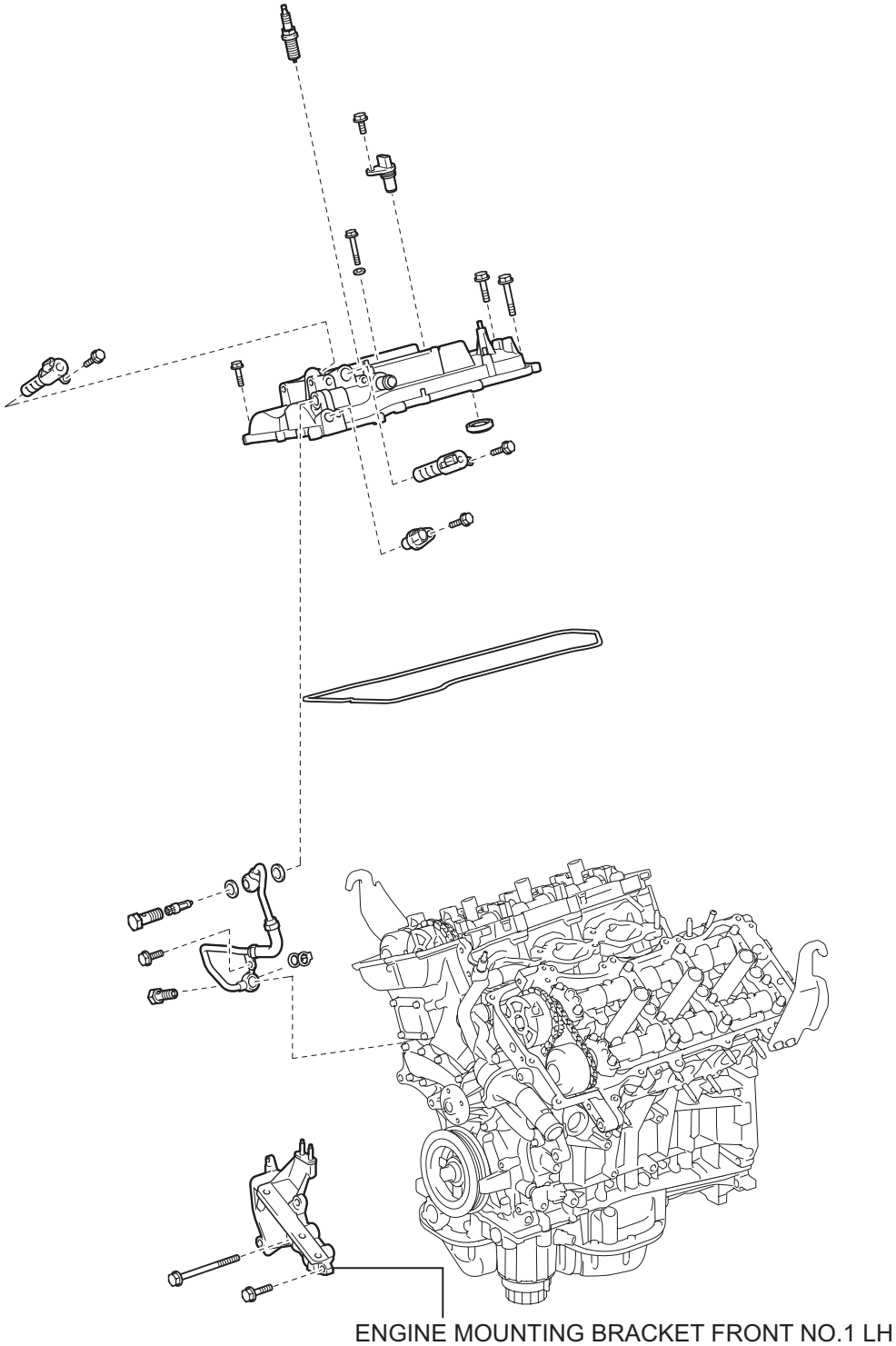
ENGINE MOUNTING BRACKET FRONT NO.1 LH
P
A118978E02

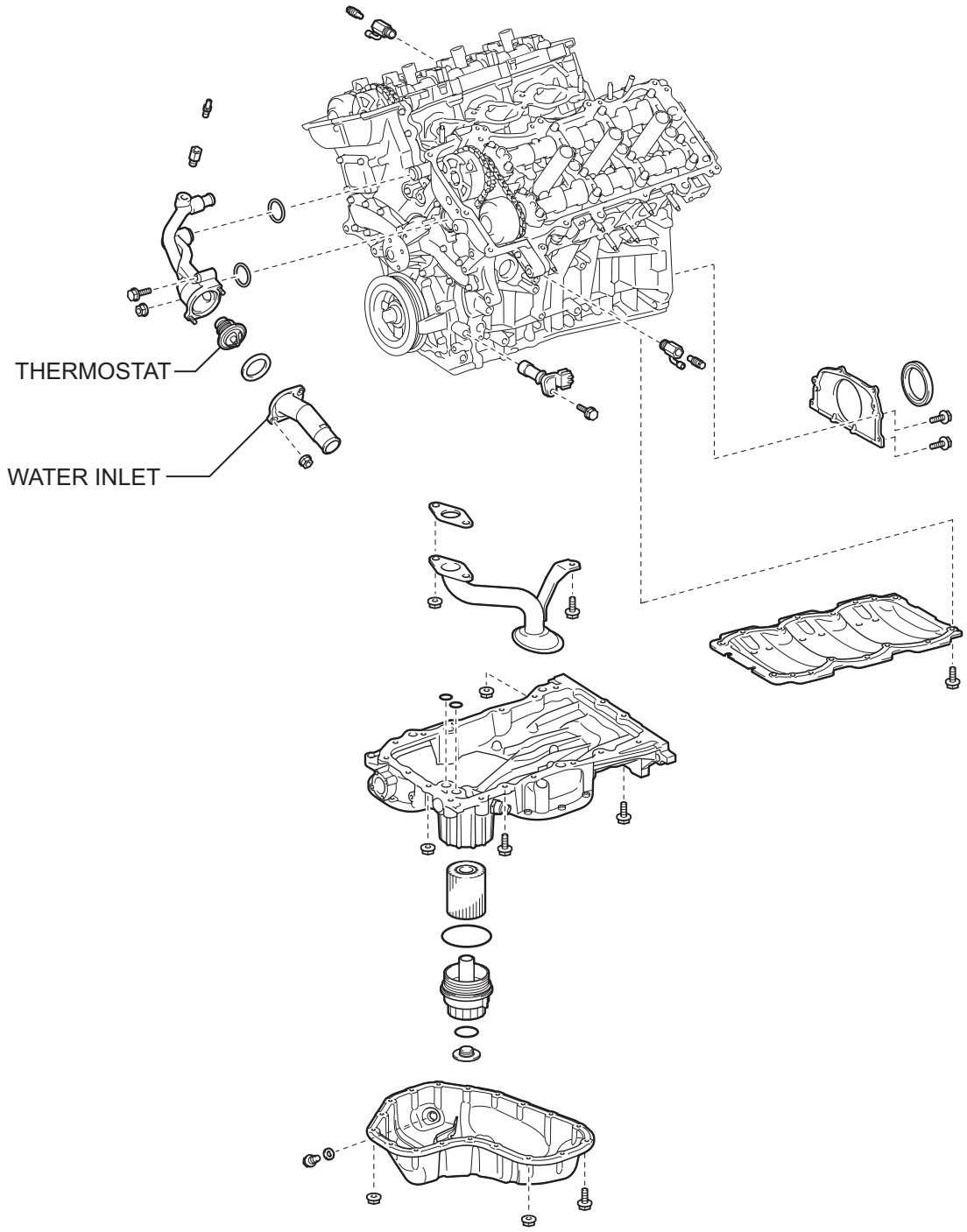
THERMOSTAT
WATER INLET
P
A114566E02

REMOVAL

1. **DRAIN ENGINE COOLANT**
2. **REMOVE V-BANK COVER SUB-ASSEMBLY**
3. **REMOVE ENGINE MOVING CONTROL ROD**
4. **REMOVE ENGINE MOUNTING CONTROL BRACKET**
5. **REMOVE ENGINE MOUNTING BRACKET FRONT NO.1 LH**
6. **REMOVE FAN AND GENERATOR V BELT**
7. **REMOVE IDLER PULLEY SUB-ASSEMBLY NO.2**
8. **SEPARATE RADIATOR HOSE OUTLET**
9. **REMOVE WATER INLET**
   (a) Remove the 2 bolts and water inlet.
10. **REMOVE THERMOSTAT**

INSPECTION

1. **INSPECT THERMOSTAT**
   (a) Inspect the thermostat.
   HINT:
   The thermostat is numbered with the valve opening temperature.

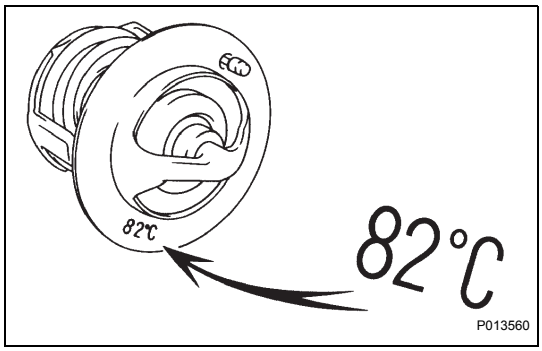

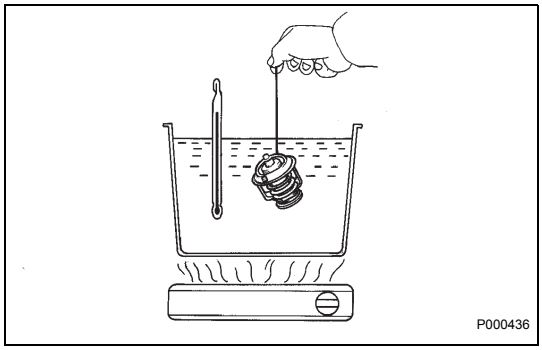

   (b) Immerse the thermostat in water and gradually heat the water.
   (c) Check the valve opening temperature.
   Valve opening temperature:
   80 to 84°C (176 to 183°F)
   If the valve opening temperature is not as specified, replace the thermostat.

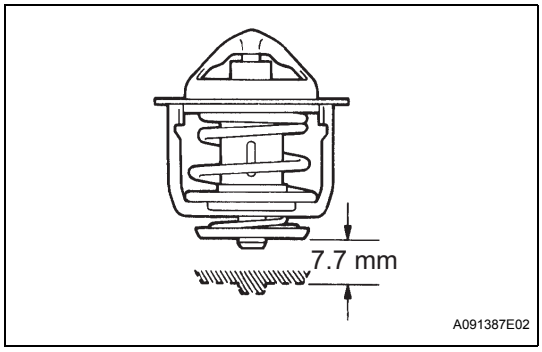

   (d) Check the valve lift.
   Valve lift:
   7.7 mm (0.3031 in.) or more at 95°C (203°F)
   If the valve lift is not as specified, replace the thermostat.
   (e) Check that the valve is fully closed when the thermostat is at low temperature (below 40°C (104°F)).
   If not closed, replace the thermostat.

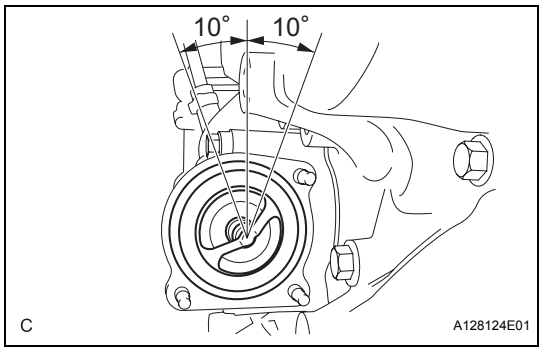

INSTALLATION

1. **INSTALL THERMOSTAT**
   (a) Install a new gasket to the thermostat.
   (b) Install the thermostat with the jiggle valve facing up.
   HINT:
   The jiggle valve may be set within 10°of either side of the prescribed position.
2. **INSTALL WATER INLET**
   Torque: 10 N*m (102 kgf*cm, 7 ft.*lbf)
3. **INSTALL RADIATOR HOSE OUTLET**
4. **INSTALL IDLER PULLEY SUB-ASSEMBLY NO.2**
5. **INSTALL FAN AND GENERATOR V BELT**
6. **INSTALL ENGINE MOUNTING BRACKET FRONT NO.1 LH**
7. **INSTALL ENGINE MOUNTING CONTROL BRACKET**
8. **INSTALL ENGINE MOVING CONTROL ROD**
9. **INSTALL V-BANK COVER SUB-ASSEMBLY**
10. **ADD ENGINE COOLANT**
11. **CHECK FOR ENGINE COOLANT LEAKS**

RADIATOR

COMPONENTS

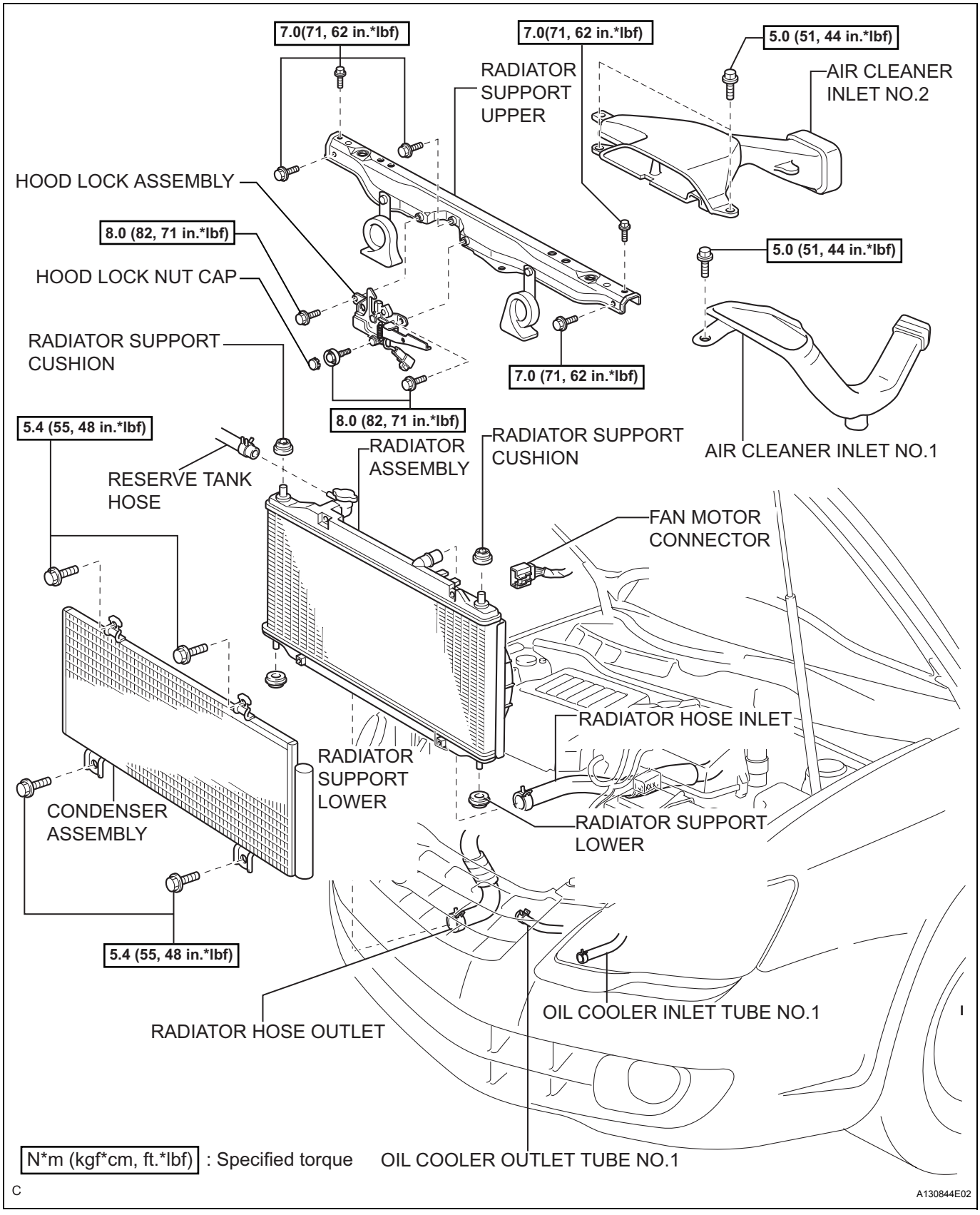

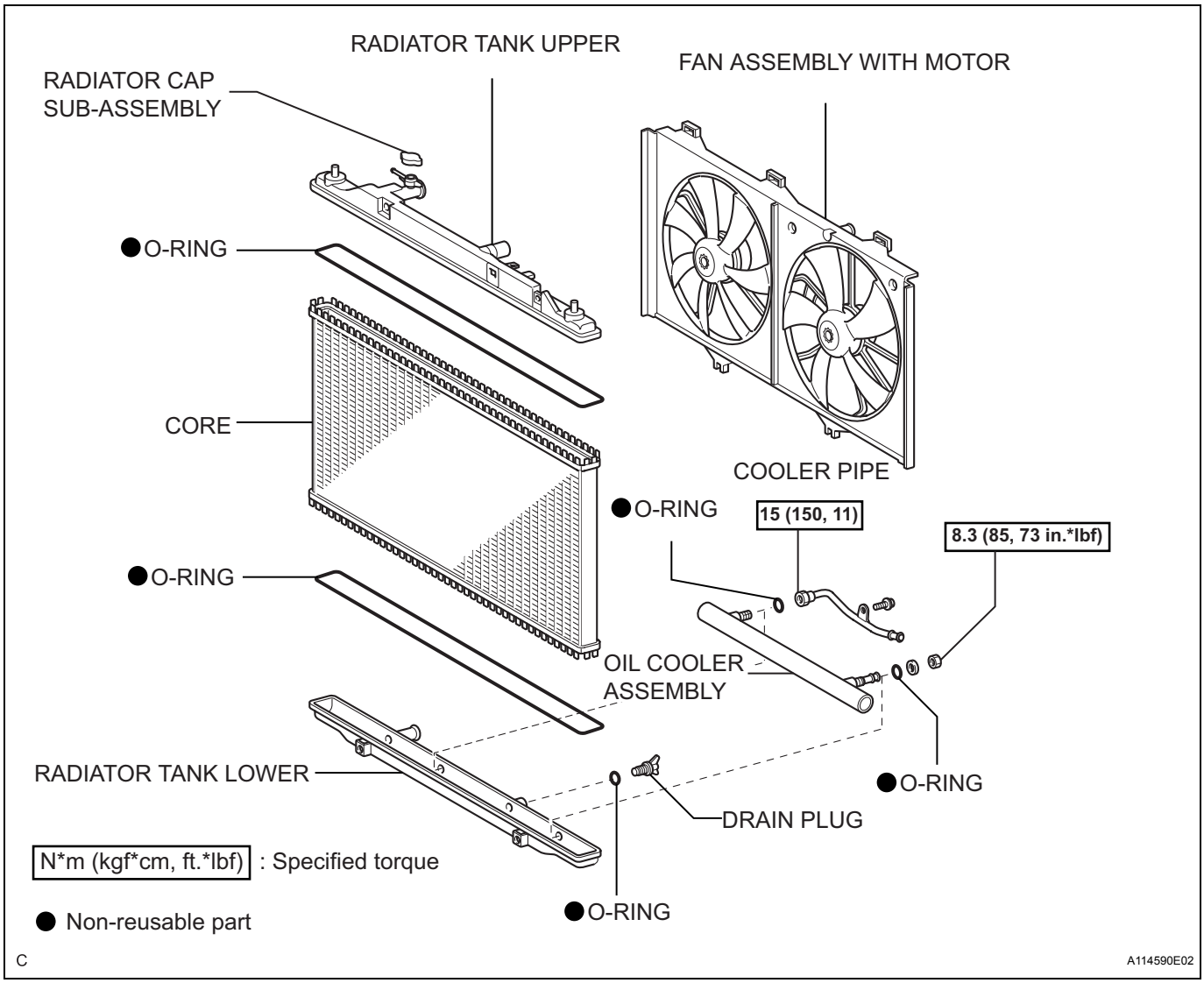

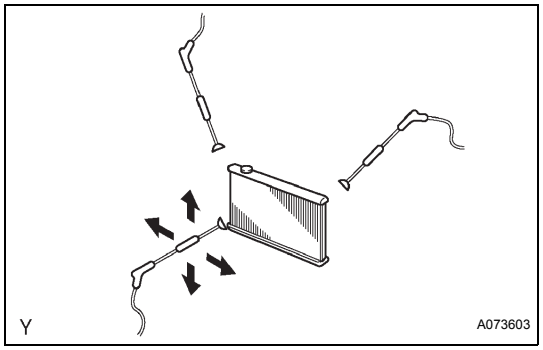

ON-VEHICLE CLEANING

1. INSPECT FINS BLOCKAGE

(a) If the fins are clogged, wash them with water or a steam cleaner. Dry with compressed air.

NOTICE:

- **If the distance between the steam cleaner and the core is too close, the fins may become damaged. Keep the following injection distance.**

Standard

Injection Distance	Injection Pressures
300 mm (11.81 in.)	2,942 to 4,903 kPa (30 to 50 kg/cm^2, 427 to 711 psi)
500 mm (19.69 in.)	4,903 to 7,845 kPa (50 to 80 kg/cm^2, 711 to 1,138 psi)

- **If the fins are bent, straighten them with a screwdriver or pliers.**
- **Never apply water directly onto the electronic components.**

REMOVAL

1. **DRAIN ENGINE COOLANT**
2. **REMOVE BATTERY**
3. **REMOVE AIR CLEANER INLET NO.2**
4. **REMOVE AIR CLEANER INLET NO.1**
5. **SEPARATE RADIATOR RESERVE TANK HOSE OR PIPE**
   (a) Separate radiator reserve tank hose from the radiator assembly.

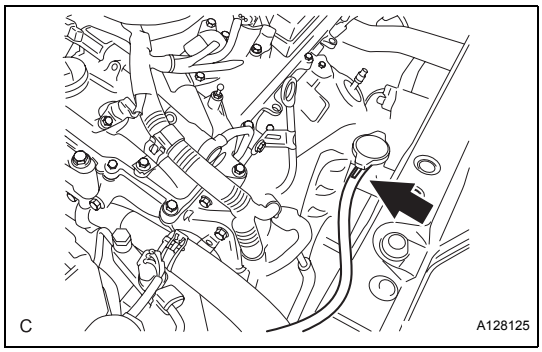

6. **SEPARATE RADIATOR HOSE INLET**
   (a) Separate radiator hose inlet from the radiator assembly.

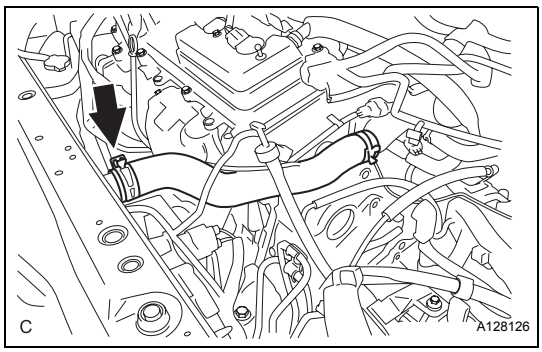

7. **SEPARATE RADIATOR HOSE OUTLET**
   (a) Separate radiator hose outlet from the radiator assembly.

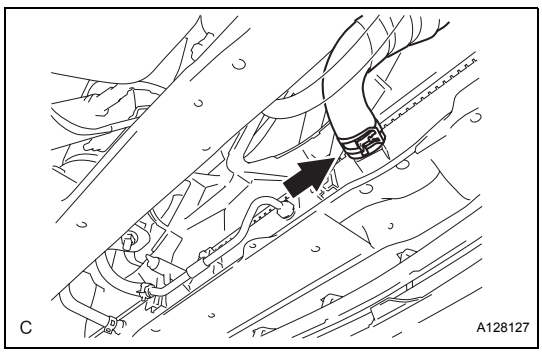

8. **SEPARATE OIL COOLER INLET TUBE NO.1**
   (a) Separate oil cooler inlet tube No.1 from the radiator assembly.

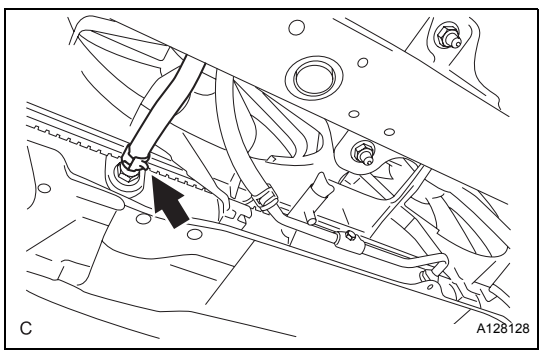

CO

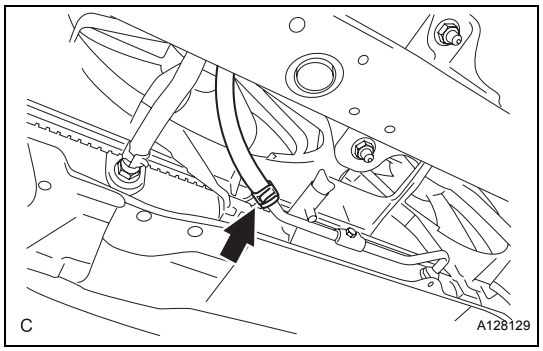

9. SEPARATE OIL COOLER OUTLET TUBE NO.1

(a) Separate oil cooler outlet tube No.1 from the radiator assembly.

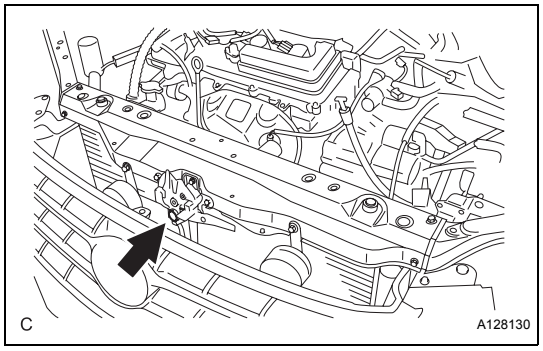

10. REMOVE RADIATOR SUPPORT UPPER

(a) Remove the hood lock nut cap from the hood lock assembly.

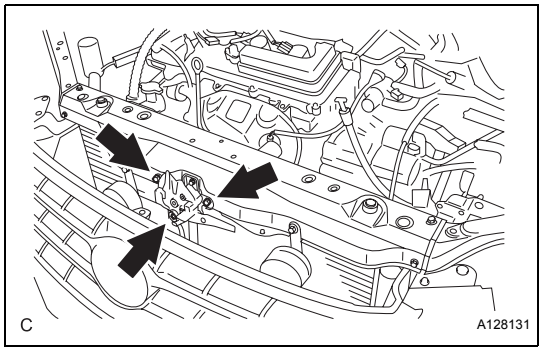

(b) Remove the 3 bolts and separate the hood lock assembly from the radiator support upper.

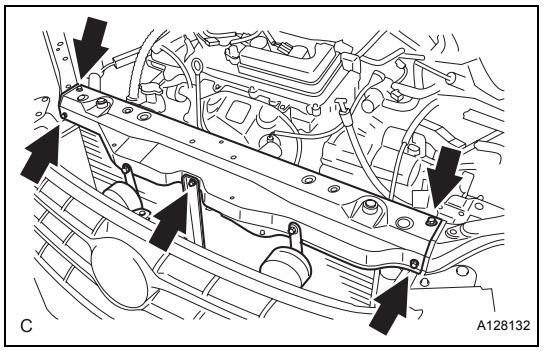

(c) Remove the 5 bolts and radiator support upper.

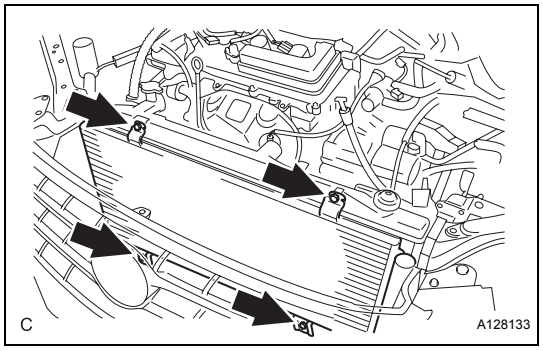

11. REMOVE RADIATOR ASSEMBLY

(a) Disconnect the fan motor connector.

(b) Remove the 4 bolts and separate the condenser assembly from the radiator assembly.

CO

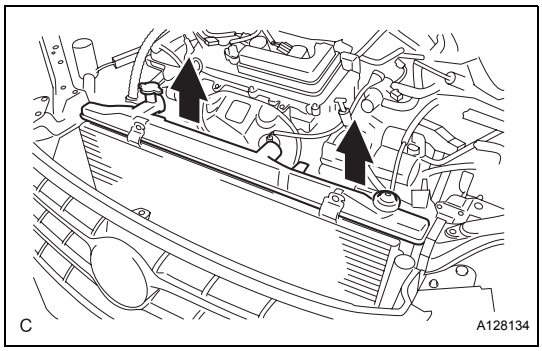

(c) Remove the radiator assembly from the body.

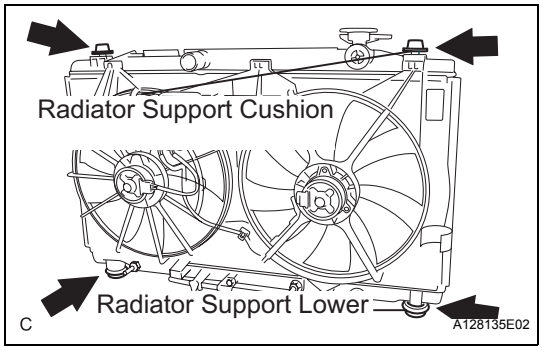

12. REMOVE RADIATOR SUPPORT CUSHION

(a) Remove the 2 radiator support cushions from the radiator assembly.

13. REMOVE RADIATOR SUPPORT LOWER

(a) Remove the 2 radiator support lowers from the radiator assembly.

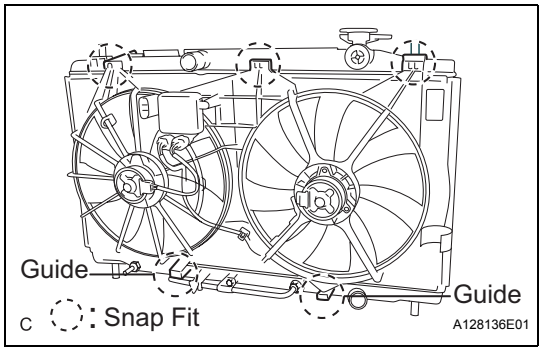

14. REMOVE FAN ASSEMBLY WITH MOTOR

(a) Disassemble the 3 snap fits and lift the fan assembly w/motor from the radiator.

CO

DISASSEMBLY

1. REMOVE DRAIN PLUG

(a) Remove the drain plug.
(b) Remove the O-ring.

2. ASSEMBLE SST

SST 09230-01010 (09231-01010, 09231-01030)

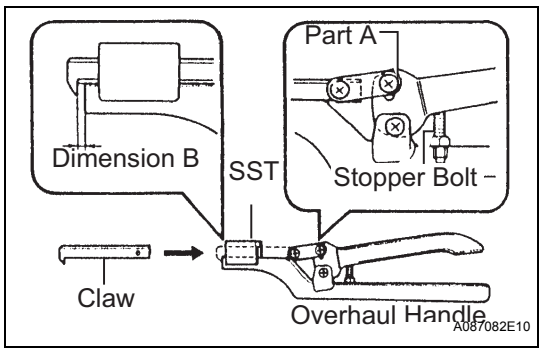

(a) Install the claw to the overhaul handle, inserting it in the hole in part A as shown in the illustration.
(b) While gripping the handle, adjust the stopper bolt so that dimension B is as shown in the illustration.

Dimension B:
0.2 to 0.3 mm (0.008 to 0.012 in.)

NOTICE:
If the stopper bolt is not adjusted, the claw may be damaged.

3. REMOVE UNCAULK LOCK PLATE

(a) Using SST to release the caulking, grip the handle until stopped by the stopper bolt.
SST 09230-01010 (09231-01010, 09231-01030)

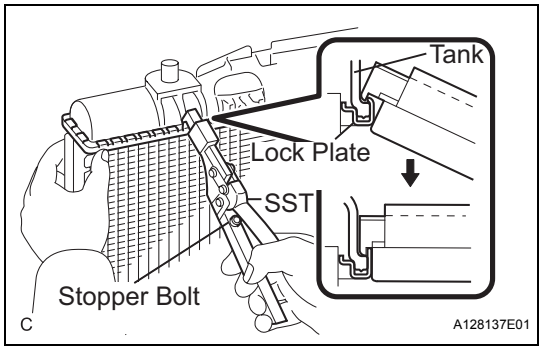

4. REMOVE RADIATOR TANK UPPER AND TANK LOWER

(a) Lightly tap the bracket of the radiator (or radiator hose inlet or outlet) with a soft-faced hammer and remove the tank.
(b) Remove the O-ring.

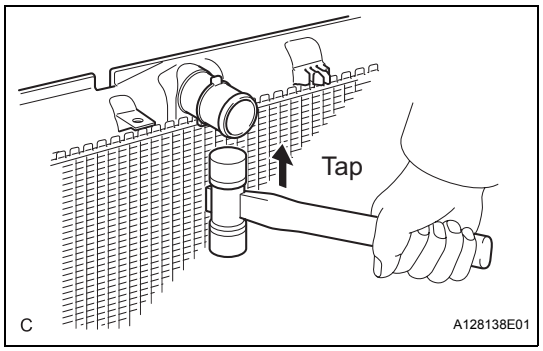

5. REMOVE OIL COOLER ASSEMBLY

(a) Remove the screw and cooler pipe.
(b) Remove the nut and plate washer.
(c) Remove the oil cooler.
(d) Remove the 2 O-rings from the oil cooler.

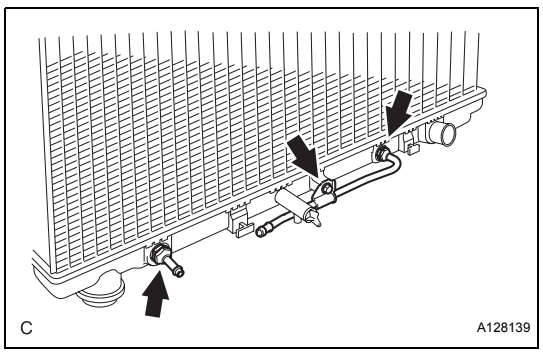

CO

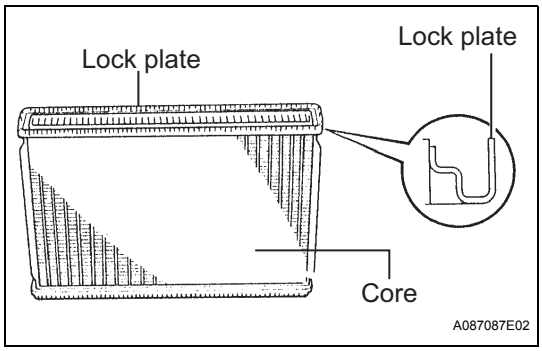

INSPECTION

1. INSPECT LOCK PLATE

(a) Inspect the lock plate for damage.
HINT:
- If the sides of the lock plate groove are deformed, reassembly of the tank will be impossible. Therefore, first correct the lock plate groove's shape with pliers or a similar object, if necessary.
- Water leakage will result if the bottom of the lock plate groove is damaged or dented. Repair or replace if necessary.

NOTICE:
The radiator can only be recaulked 2 times. After the 2nd time, the radiator core must be replaced.

REASSEMBLY

1. INSTALL OIL COOLER ASSEMBLY

(a) Clean the O-rings contact surface of the lower tank and oil cooler.
(b) Install 2 new O-rings to the oil cooler.
(c) Install the oil cooler to the lower tank.
(d) Install the plate washer and nut.
Torque: 8.3 N*m (85 kgf*cm, 73 in.*lbf)
(e) Install the cooler pipe.
Torque: 15 N*m (150 kgf*cm, 11 ft.*lbf)
(f) Install the screw.

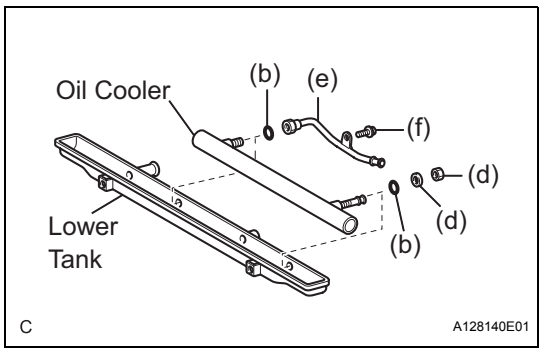

2. INSTALL RADIATOR TANK UPPER AND TANK LOWER

(a) After checking that there are no foreign objects in the lock plate groove, install a new O-ring without twisting it.
HINT:
When cleaning the lock plate groove, lightly rub it with sand paper without scratching it.

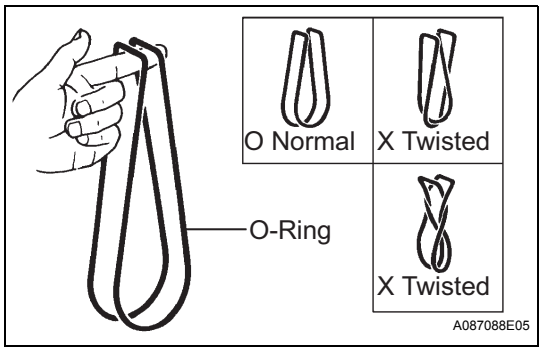

(b) Install the tank without damaging the O-ring.
(c) Tap the lock plate with a soft-faced hammer so that there is no gap between the lock plate and the tank.

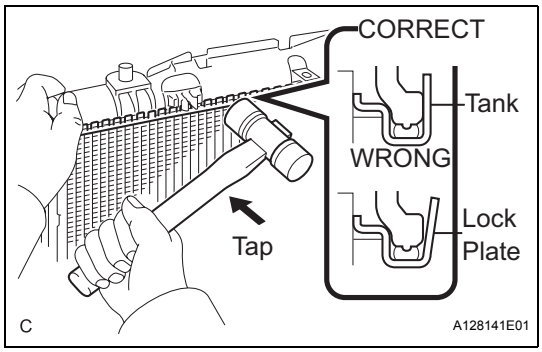

3. ASSEMBLE SST
SST 09230-01010, 09231-14010

CO

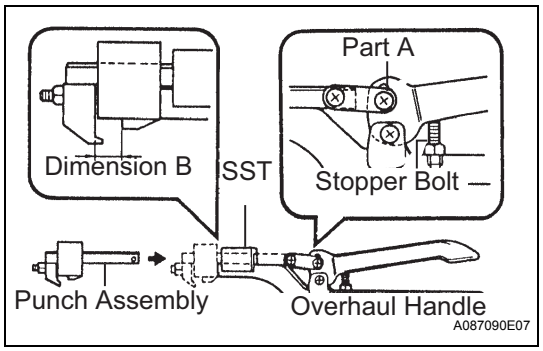

(a) Install the punch assembly to the overhaul handle, inserting it in the hole in part A as shown in the illustration.
(b) While gripping the handle, adjust the stopper bolt so that dimension B is as shown in the illustration.
Dimension B:
8.4 mm (0.331 in.)

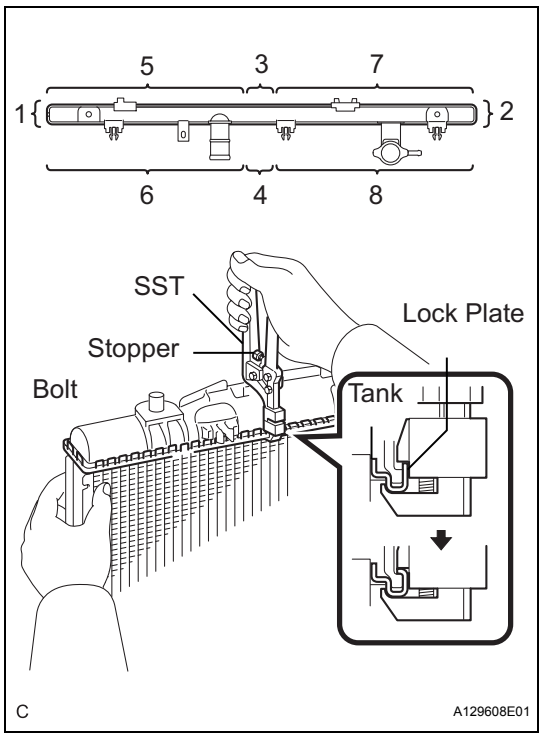

4. CAULK LOCK PLATE

(a) Lightly press SST against the lock plate in the order shown in the illustration. After repeating this a few times, fully caulk the lock plate by gripping the handle until stopped by the stopper plate.
SST 09230-01010
HINT:
- Do not tap the areas protruding around the pipes, brackets or tank ribs.
- The dotted circles shown in the illustration and parts of the oil cooler near the dotted circles cannot be tapped with the SST. Use pliers or similar objects and be careful not to damage the core plates.

CO

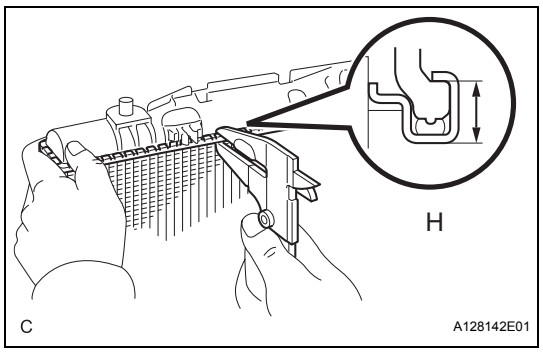

(b) Check the lock plate height (H) after completing the caulking.
Plate height (H):
7.40 to 7.80 mm (0.2913 to 0.3071 in.)
If not within the specified height, adjust the stopper bolt of the handle and caulk again.

5. INSTALL DRAIN PLUG

(a) Install a new O-ring to the drain plug.
(b) Install the drain plug.

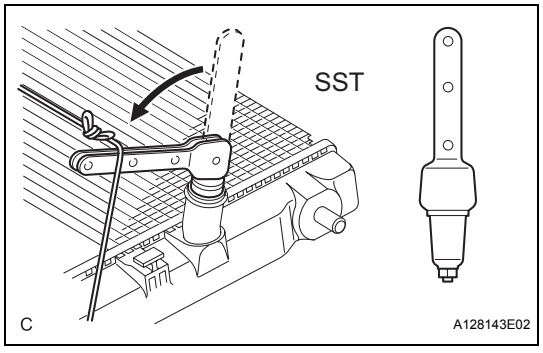

6. INSPECT FOR WATER LEAKS

(a) Plug the inlet and outlet pipes of the radiator with SST.
SST 09230-01010
(b) Using a radiator cap tester, apply pressure to the radiator.
Test pressure:
177 kPa (1.8 kgf/cm^2, 26 psi)
(c) Submerge the radiator in water.

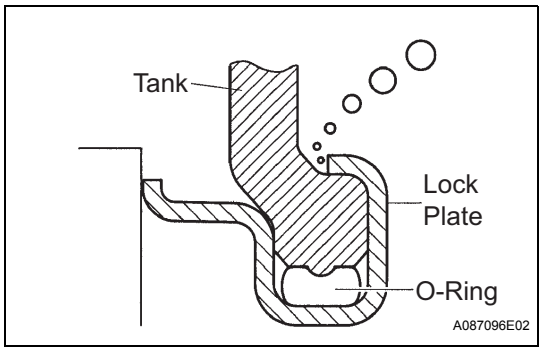

(d) Inspect for leaks.
HINT:
On radiators with resin tanks, there is clearance between the tank and lock plate where a minute amount of air will remain, giving the appearance of an air leak when the radiator is submerged in water. Therefore, before doing the water leak test, first swish the radiator around in the water until all air bubbles disappear.

INSTALLATION

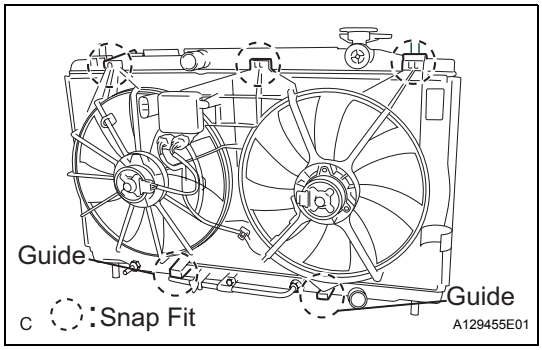

1. INSTALL FAN MOTOR WITH MOTOR

(a) Install the fan assembly w/ motor to the radiator with the 2 guides at the bottom and 3 snap fits on the top.

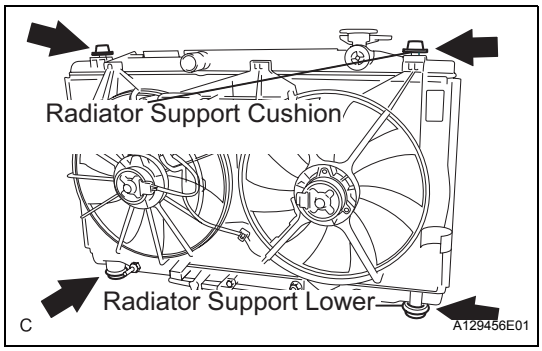

2. INSTALL RADIATOR SUPPORT LOWER

(a) Install the 2 radiator support lowers to the radiator assembly.

3. INSTALL RADIATOR SUPPORT CUSHION

(a) Install the 2 radiator support cushions to the radiator assembly.

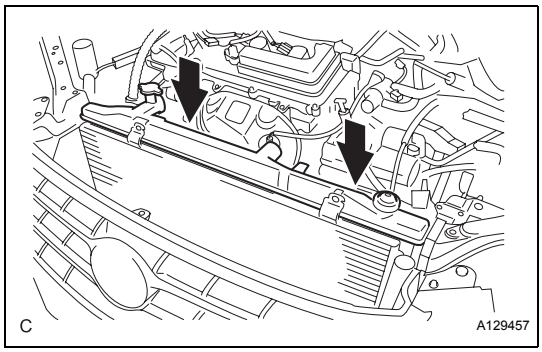

4. INSTALL RADIATOR ASSEMBLY

(a) Install the radiator to the body.

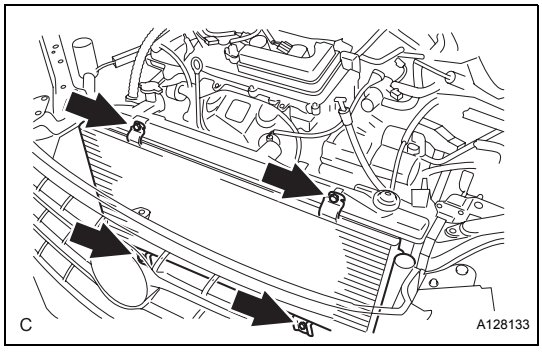

(b) Install the condenser assembly with the 4 bolts.
Torque: 5.4 N*m (55 kgf*cm, 48 in.*lbf)

(c) Connect the fun motor connector.

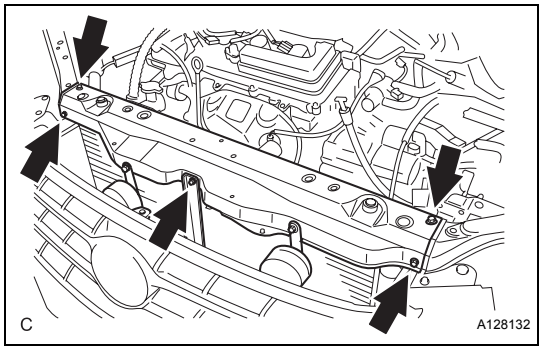

5. INSTALL RADIATOR SUPPORT UPPER

(a) Install the radiator support upper with the 5 bolts.
Torque: 7.0 N*m (71 kgf*cm, 62 in.*lbf)

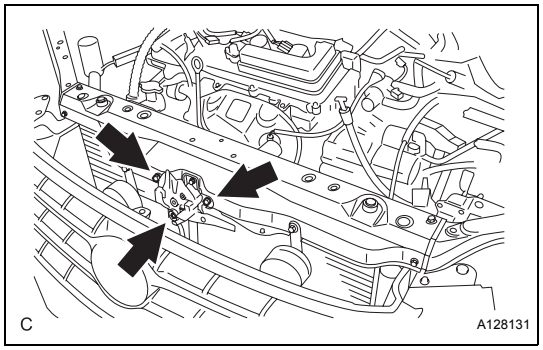

(b) Install the hood lock assembly to the radiator support upper with the 3 bolts.
Torque: 8.0 N*m (82 kgf*cm, 71 in.*lbf)

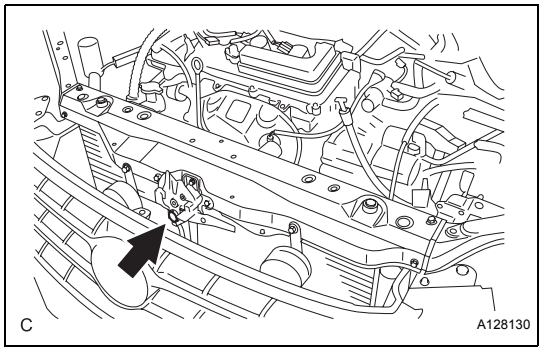

(c) Install the hood lock nut cap to the hood lock assembly.

CO

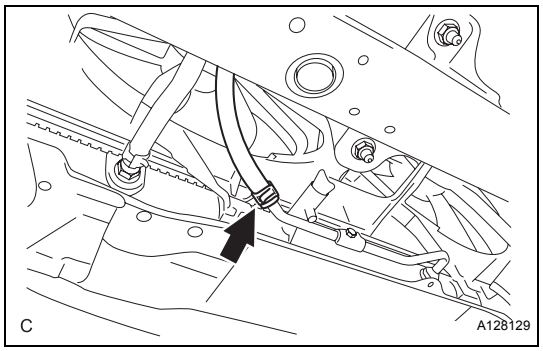

6. INSTALL OIL COOLER OUTLET TUBE NO.1

(a) Install oil cooler outlet tube No.1 to the radiator assembly.

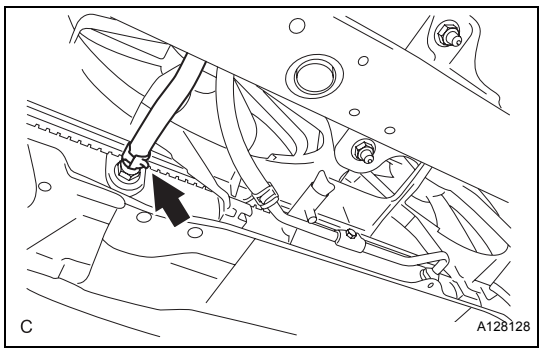

7. INSTALL OIL COOLER INLET TUBE NO.1

(a) Install oil cooler inlet tube No.1 to the radiator assembly.

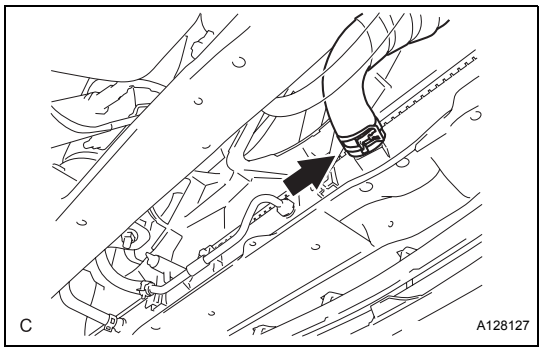

8. INSTALL RADIATOR HOSE OUTLET

(a) Install radiator hose outlet to the radiator assembly.

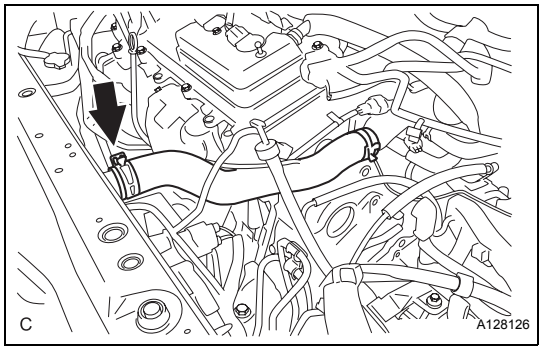

9. INSTALL RADIATOR HOSE INLET

(a) Install radiator hose inlet to the radiator assembly.

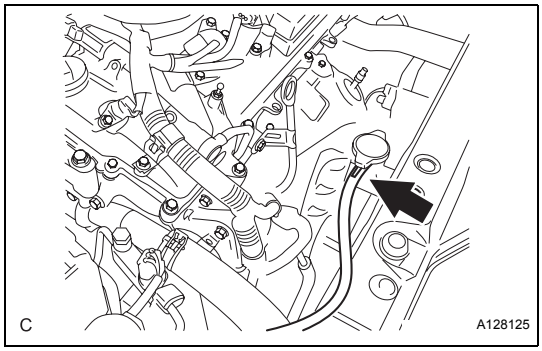

10. INSTALL RADIATOR RESERVE TANK HOSE OR PIPE

(a) Install radiator reserve tank hose to the radiator assembly.

11. INSTALL AIR CLEANER INLET NO.1

12. INSTALL AIR CLEANER INLET NO.2

13. INSTALL BATTERY

14. ADD ENGINE COOLANT

15. CHECK FOR ENGINE COOLANT LEAKS

CRUISE CONTROL SYSTEM

PRECAUTION

NOTICE:
When disconnecting the negative (-) battery terminal, initialize the following system after the terminal is reconnected.

System Name	See procedure
Sliding Roof Control System	IN-29
Power Window Control System	

1. EXPRESSIONS OF IGNITION SWITCH

The type of ignition switch used on this model differs according to the specifications of the vehicle. The expressions Listed in the table below are used in this section.

Switch Type / Expression	Ignition Switch (position)	Engine Switch (condition)
Ignition Switch off	LOCK	Off
Ignition Switch on (IG)	ON	On (IG)
Ignition Switch on (ACC)	ACC	On (ACC)
Engine Start	START	Start

F053330E07

2. HANDLING PRECAUTION FOR CRUISE CONTROL SYSTEM

(a) Turn the cruise control main switch OFF when not using the cruise control system.
(b) Be careful as the vehicle speed increases when driving downhill with the cruise control system on.
(c) The RESUME/ACCEL operation changes according to the cruise control system status. When the cruise control system is operating, ACCEL operates. When the cruise control system is not operating, RESUME operates.

(d) When the cruise control system is operating and the CRUISE main indicator light blinks, turn the cruise control main switch OFF to reset the cruise control system. After the reset, if the cruise control main switch cannot be turned ON, or the cruise control system is canceled immediately after turning the cruise control main switch ON, the system may have a malfunction.

(e) Do not use the cruise control system where the road conditions are as follows:
- Heavy traffic
- Steep downhill
- Roads with sharp turns
- Icy or snowy roads
- Slippery roads

PARTS LOCATION

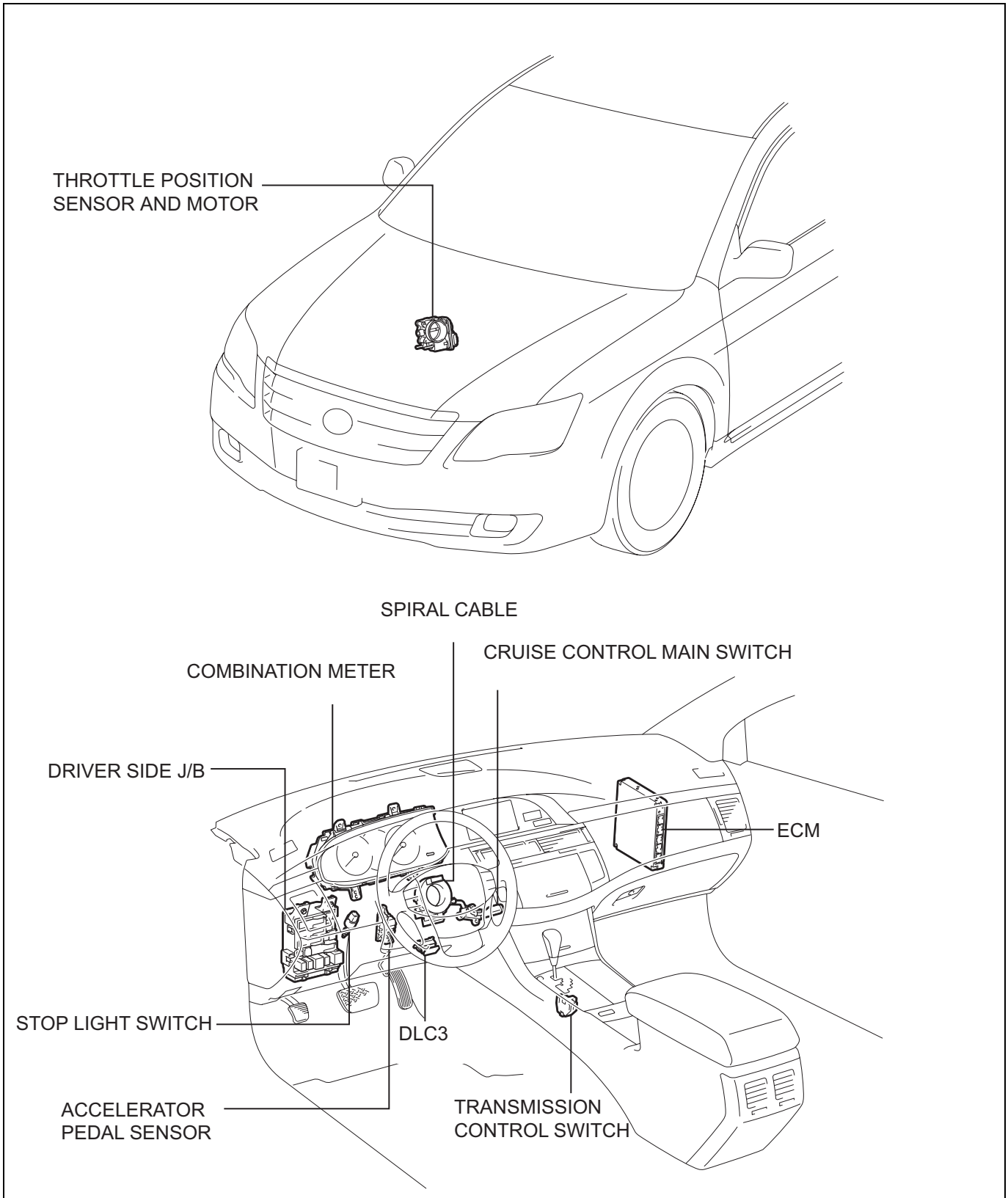

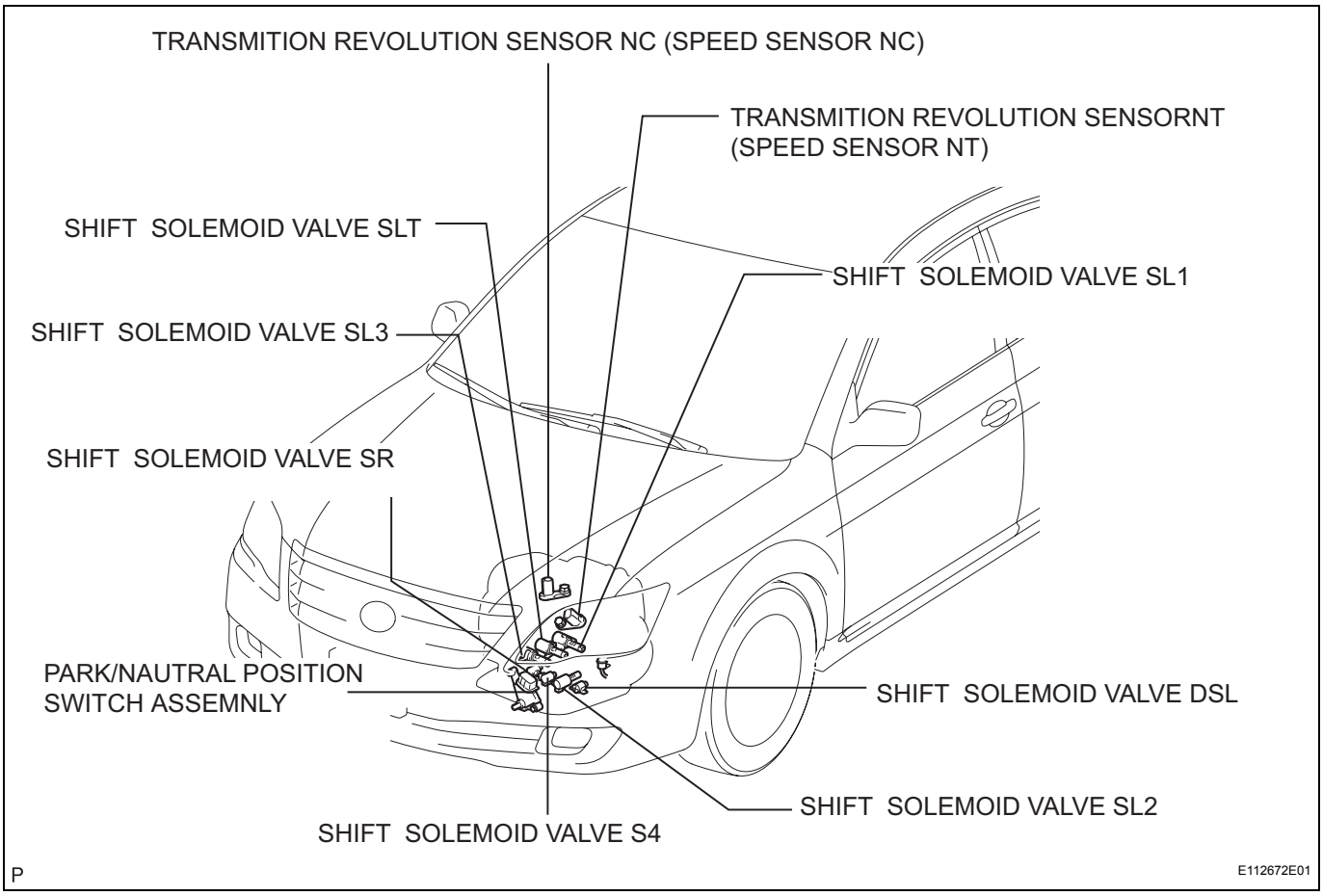
TRANSMITION REVOLUTION SENSOR NC (SPEED SENSOR NC)
TRANSMITION REVOLUTION SENSORNT
(SPEED SENSOR NT)
SHIFT SOLEMOID VALVE SLT
SHIFT SOLEMOID VALVE SL1
SHIFT SOLEMOID VALVE SL3
SHIFT SOLEMOID VALVE SR
PARK/NAUTRAL POSITION
SWITCH ASSEMNLY
SHIFT SOLEMOID VALVE DSL
SHIFT SOLEMOID VALVE SL2
SHIFT SOLEMOID VALVE S4
P
E112672E01

SYSTEM DIAGRAM

Transmitting ECU (transmitter)	Receiving ECU	Signals	Communication methhod
ECM	Combination meter ECU	CRUISE indicator operation signal	CAN BEAN (Instrument Panel Bus)

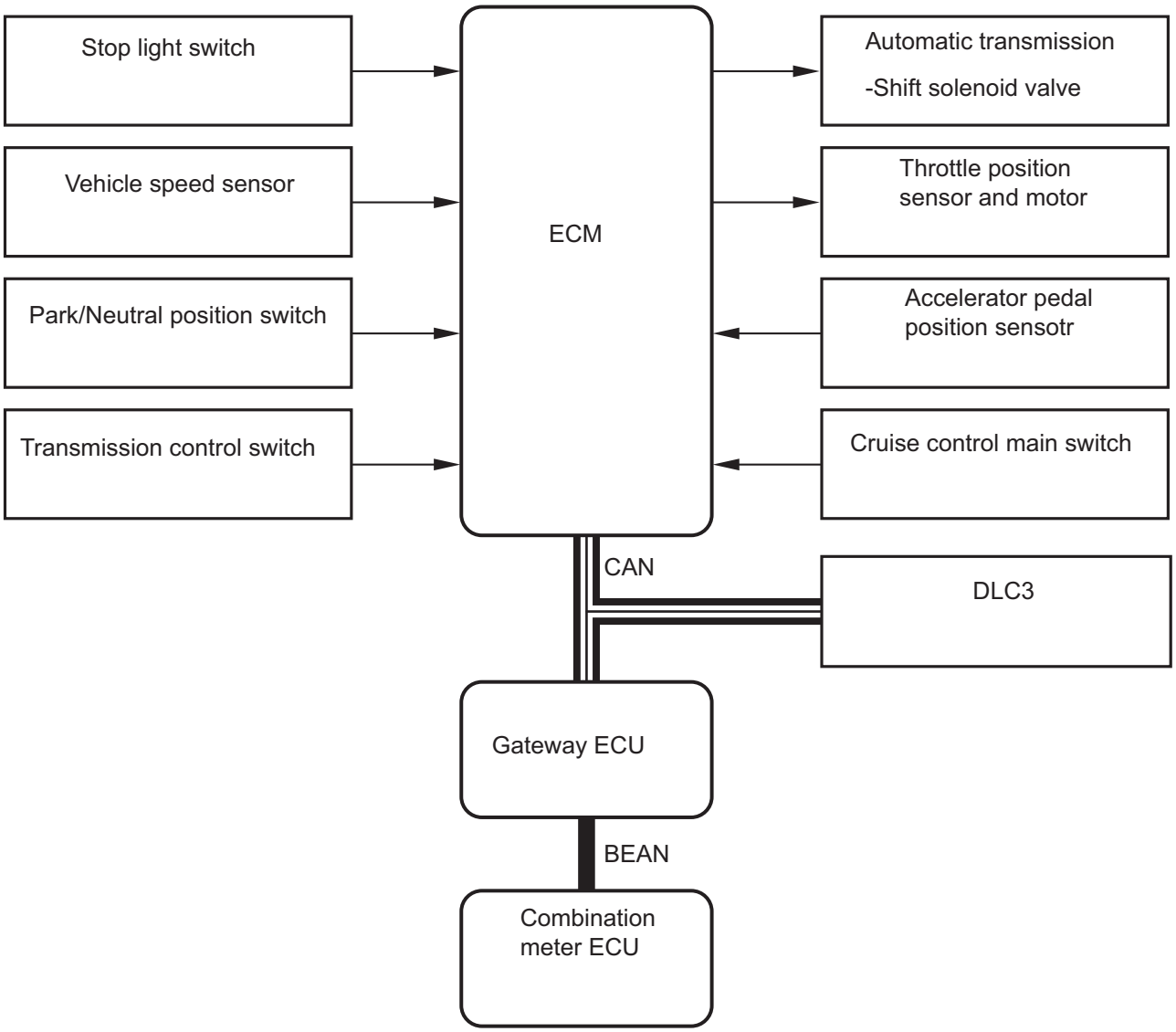

N

E112706E01

CC

SYSTEM DESCRIPTION

1. CRUISE CONTROL SYSTEM

This system is controlled by the ECM, and is activated by the throttle position sensor and motor. The ECM controls the following functions: ON-OFF, -/SET, +/RES, CANCEL, vehicle speed operation, motor output control, and overdrive control.

- The ECM compares the driving vehicle speed from the speed sensor with the stored vehicle speed set through the cruise control main switch assembly. The ECM controls the throttle valve motor of the throttle position sensor and motor to close the valve when the driving speed is less than the stored speed.
- The ECM receives signals such as ON-OFF, -/SET, +/RES, and CANCEL from the cruise control main switch assembly and executes them.
- The ECM illuminates the combination meter's CRUISE main indicator light when it receives the cruise control main switch ON signal.
- The ECM cancels the cruise control system when the brake pedal is depressed and the ECM receives the stop light switch signal.
- The ECM cancels the cruise control system when the shift lever is moved from D (5th or 4th gear) to N (3rd, 2nd or 1st gear), and the ECM receives the PNP switch signal.

2. LIMIT CONTROL

(a) Low speed limit

The lowest possible limit of the speed setting range is set at approximately 40 km/h (25 mph). The cruise control system cannot be set when the driving vehicle speed is below the low speed limit. Cruise control operation will be automatically canceled.

(b) High speed limit

The highest possible limit of the speed setting range is set at approximately 200 km/h (125 mph). The cruise control system cannot be set when the driving vehicle speed is over the high speed limit. Also, +/RES cannot be used to increase speed beyond the high speed limit.

3. OPERATION OF CRUISE CONTROL

The cruise control main switch operates 7 functions: SET, COAST, TAP-DOWN, RESUME, ACCEL, TAP-UP, and CANCEL. The SET, TAP-DOWN and COAST functions, and the RESUME, TAP-UP and ACCEL functions are operated with the same switch. The cruise control main switch assembly is an automatic return type switch which turns on only while operating it in each arrow direction and turns off after releasing it.

(a) SET CONTROL

Vehicle speed is stored and constant speed control is maintained when pushing the switch to -/SET while driving with the cruise control main switch ON (the CRUISE main indicator light is on), and the vehicle speed is within the set speed range (between the low and high speed limits).

(b) COAST CONTROL

When the cruise control main switch is set to -/SET and held in that position while the cruise control system is operating, the ECM sends a "throttle valve opening angle 0°" demand signal to the cruise control system. Then the vehicle speed, when the cruise control main switch is released, is stored and maintained.

HINT:

An actual throttle valve opening angle of 0° is not possible due to the idle speed control, etc.

(c) TAP-DOWN CONTROL

When tapping down the cruise control main switch to -/SET (for approximately 0.5 second) while the cruise control system is in operation, the stored vehicle speed decreases each time by approximately 1.6 km/h (1.0 mph). When the cruise control main switch is released from -/SET and the difference between the driving and stored vehicle speed is more than 5 km/h (3 mph), the vehicle speed is stored and constant speed control is maintained.

(d) ACCELERATION CONTROL

The throttle valve motor of the throttle position sensor and motor is instructed by the ECM to open the throttle valve when +/RES on the cruise control main switch is pressed and held while the cruise control system is in operation. When the cruise control main switch is released from +/RES, the vehicle speed is stored and the vehicle is controlled at a constant speed.

(e) TAP-UP CONTROL
When tapping up the cruise control main switch to +/RES (for approximately 0.5 second) while the cruise control system is in operation, the stored vehicle speed increases each time by approximately 1.6 km/h (1.0 mph). However, when the difference between the driving and the stored vehicle speed is more than 5 km/h (approximately 3.1 mph), the stored vehicle speed will not be changed.

(f) RESUME CONTROL
If cruise control operation was canceled with the stop light switch or the CANCEL switch, and if driving speed is within the limit range, pushing the cruise control main switch to +/RES restores vehicle speed memorized at the time of cancellation, and maintains constant speed control.

(g) MANUAL CANCEL CONTROL
Performing any of the following cancels the cruise control system while in operation (the stored vehicle speed in the ECM is maintained).
- Depressing the brake pedal
- Moving the shift lever to any position except D (5th and 4th gears)
- Pushing the cruise control main switch to CANCEL
- Turning the cruise control main switch OFF (the stored vehicle speed in the hybrid vehicle control ECU is not maintained).

4. AUTO CANCEL (FAIL-SAFE)
This system has an automatic cancellation function (fail-safe) (See page CC-16).

HOW TO PROCEED WITH TROUBLESHOOTING

1	VEHICLE BROUGHT TO WORKSHOP

NEXT

2	PROBLEM SYMPTOM CONFIRMATION

NEXT

3	CHECK MULTIPLEX COMMUNICATION SYSTEM

Refer to the how to proceed with troubleshooting (See page MP-10).

(a) Check for output DTCs.

Result

Result	Proceed to
MPX DTC is not output	A
MPX DTC is output	B

HINT:
The ECM of this system is connected to the multiplex communication system. Therefore, before starting troubleshooting, make sure to check that there is no trouble in the multiplex communication system.

B → **PROCEED TO "MULTIPLEX COMMUNICATION SYSTEM"**

A

4	CHECK CAN COMMUNICATION SYSTEM

Refer to the precaution (See page CA-1).

(a) Check for output DTCs.

Result

Result	Proceed to
CAN DTC is not output	A
CAN DTC is output	B

HINT:
The ECM of this system is connected to the CAN communication system. Therefore, before starting troubleshooting, make sure to check that there is no trouble in the CAN communication system.

B → **PROCEED TO "CAN COMMUNICATION SYSTEM"**

A

5	DTC CHECK AND CLEAR

Refer to the DTC check/clear (See page CC-15).

NEXT

6	DTC CHECK (OTHER THAN MPX AND CAN SYSTEM DTC)

CC

Refer to the DTC check/clear (See page CC-15).

Result

Result	Proceed to
DTC is not output	A
DTC is output	B

A → GO TO STEP 8

B

7	DTC CHART

Refer to the diagnostic trouble code chart (See page CC-17).

NEXT

GO TO STEP 11

8	PROBLEM SYMPTOM SIMULATION

Result

Result	Proceed to
Fault is not listed in problem symptoms table	A
Fault is listed in problem symptoms table	B

B → GO TO STEP 10

A

9	SYMPTOM SIMULATION

Refer to the electronic circuit inspection procedure (See page IN-31).

NEXT

10	PROBLEM SYMPTOMS TABLE

Refer to the problem symptoms table (See page CC-12).

NEXT

11	CIRCUIT INSPECTION

NEXT

12	TERMINALS OF ECU

Refer to the terminals of ECU (See page CC-13).

NEXT

13	IDENTIFICATION OF PROBLEM

NEXT

14	REPAIR OR REPLACE

NEXT

15	CONFIRMATION TEST

NEXT

END

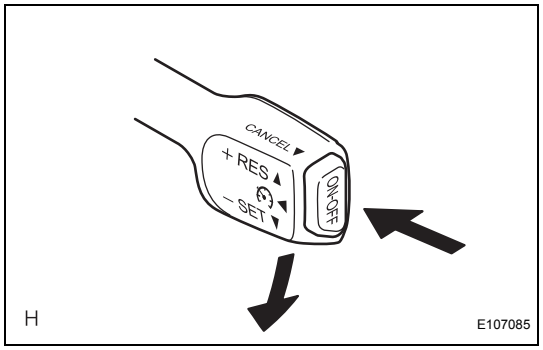

ROAD TEST

1. PROBLEM SYMPTOM CONFIRMATION

(a) Inspect SET function.
  (1) Turn the main switch ON.
  (2) Drive at the required speed (40 km/h (25 mph) or higher).
  (3) Push the cruise control main switch to -/SET.
  (4) After releasing the switch, check that the vehicle cruises at the set speed.

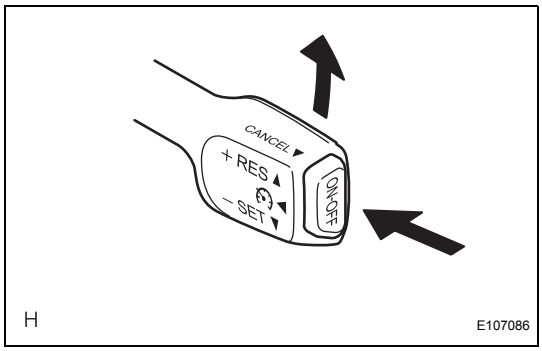

(b) Inspect the ACC (ACCEL) switch.
(1) Turn the main switch ON.
(2) Drive at the required speed (40 km/h (25 mph) or higher).
(3) Push the cruise control main switch to -/SET.
(4) Check that vehicle speed increases while the cruise control main switch is pushed to +/RES, and that the vehicle cruises at the newly set speed when the switch is released.
(5) Momentarily push the cruise control main switch to +/RES and then immediately release it. Check that vehicle speed increases by approximately 1.6 km/h (1.0 mph) (tap-up control).

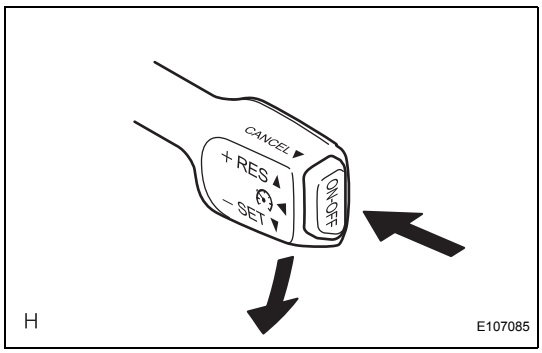

(c) Inspect the COAST function.
(1) Turn the main switch ON.
(2) Drive at the required speed (40 km/h (25 mph) or higher).
(3) Push the cruise control main switch to -/SET.
(4) Check that vehicle speed decreases while the cruise control main switch is pushed to -/SET, and the vehicle cruises at the newly set speed when the switch is released.
(5) Momentarily push the cruise control main switch to -/SET, and then immediately release it. Check that vehicle speed decreases by approximately 1.6 km/h (1.0 mph) (tap-down control).

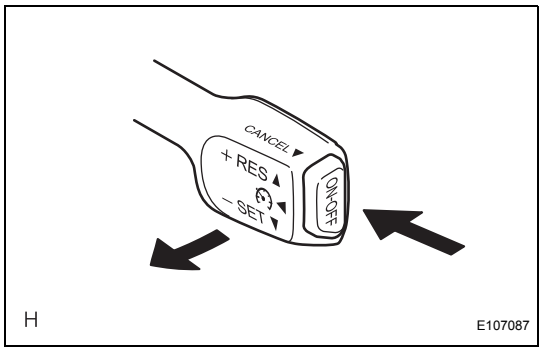

(d) Inspect the CANCEL function.
(1) Turn the main switch ON.
(2) Drive at the required speed (40 km/h (25 mph) or higher).
(3) Push the cruise control main switch to -/SET.
(4) When performing one of the following, check that the cruise control system is canceled and that the normal driving mode is reset.
- Depressing the brake pedal
- Moving the shift lever to any position except D (5th, and 4th gears)
- Turning the main switch ON
- Pulling the cruise control main switch to CANCEL

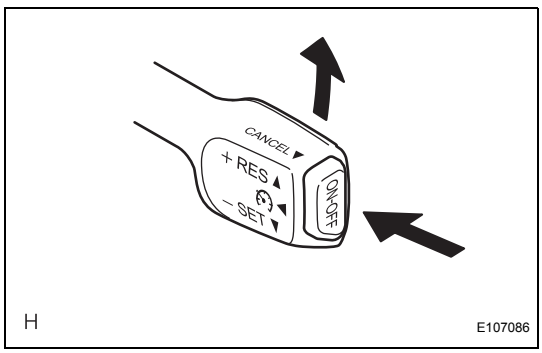

(e) Inspect the RES (RESUME) function.
(1) Turn the main switch ON.
(2) Drive at the required speed (40 km/h (25 mph) or higher).
(3) Push the cruise control main switch to -/SET.
(4) Cancel the cruise control system according to any of the above operations (other than turning the main switch OFF).
(5) After pushing the cruise control main switch to +/RES at a driving speed of more than 40 km/h (25 mph), check that the vehicle drives at the set speed.

CC

PROBLEM SYMPTOMS TABLE

If a normal system code is displayed during the DTC check but the problem still occurs, check the circuits for each problem symptom in the order given in the table below and proceed to the relevant troubleshooting page.
HINT:
Inspect the "Fuse" and "Relay" before confirming the suspected areas as shown in the chart below. Inspect each malfunction circuit in numerical order for the corresponding symptom.

CRUISE CONTROL SYSTEM

Symptom	Suspected area	See page
Main switch cannot be turned ON. (Cruise indicator light in combination meter does not come on.)	1. Cruise control switch circuit	CC-23
	2. CRUISE main indicator light circuit	CC-28
	3. ECM	CC-13
Vehicle speed setting cannot be done. (Although indicator light in combination meter comes on when the main switch is turned ON, it goes off when vehicle speed is set.)	1. Cruise control switch circuit	CC-23
	2. ECM	CC-13
Setting cannot be done (Indicator light in combination meter comes on when the main switch is turned ON and they remain ON while setting.)	1. Cruise control switch circuit	CC-23
	2. Stop light switch circuit	CC-19
	3. Park/neutral position switch circuit (DTC P0705)	AX-36
	4. Transmission control switch circuit	AX-115
	5. Combination meter system	ME-13
	6. ECM	CC-13
While the vehicle is driven with cruise control, the set control is canceled. (Indicator light and CRUISE remains ON.)	1. Cruise control switch circuit	CC-23
	2. Vehicle speed sensor circuit	CC-18
	3. Stop light switch circuit	CC-19
	4. CRUISE main indicator light circuit	CC-28
	5. Park/neutral position switch circuit (DTC P0705)	AX-36
	6. ECM	CC-13
Hunting (Speed is not constant.)	1. Vehicle speed sensor circuit	CC-18
	2. ECM	CC-13
Setting cannot be cancelled. (When Coast, Acceleration, Resume, Set speed change and Control switch are operated.)	1. Cruise control switch circuit	CC-23
	2. ECM	CC-13
DTC is not output, or is output when it should not be.	1. Diagnosis circuit	CC-29
	2. ECM	CC-13
CRUISE main indicator light does not come on.	1. Cruise control switch circuit	CC-23
	2. CRUISE main indicator light circuit	CC-28
	3. ECM	CC-13
	4. Combination meter	ME-13

TERMINALS OF ECU

1. CHECK ECM

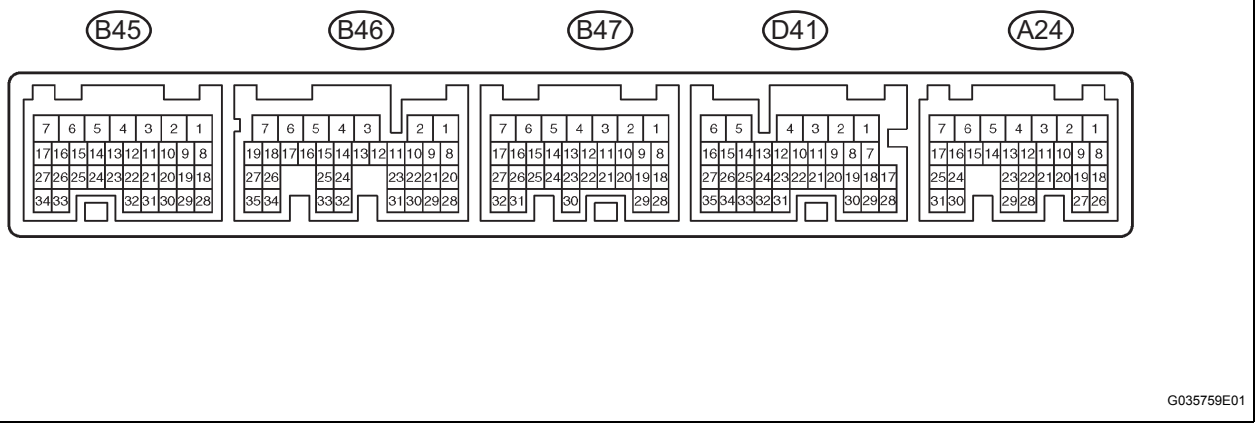

Symbols (Terminals No.)	Wiring Color	Terminal Description	Condition	Specified Condition
TC - E1 (A24-23 - B47-1)	P - BR	Ground	Ignition switch on (IG) → Connect terminals TC and CG of DLC3	10 to 14 V → Below 1 V
STP - E1 (A24-15 - B47-1)	W - BR	Stop light signal	Ignition switch on (IG) Depress brake pedal → Release brake pedal	10 to 14 V → Below 1 V
CCS - E1 (D41-2 - B47-1)	B - BR	Cruise control main switch circuit	Ignition switch on (IG)	10 to 14 V
CCS - E1 (D41-2 - B47-1)	B - BR	Cruise control main switch circuit	CANCEL switch hold ON	6.6 to 10.1 V
CCS - E1 (D41-2 - B47-1)	B - BR	Cruise control main switch circuit	SET/- switch hold ON	4.5 to 7.1 V
CCS - E1 (D41-2 - B47-1)	B - BR	Cruise control main switch circuit	RES/+ switch hold ON	2.3 to 4.0 V
CCS - E1 (D41-2 - B47-1)	B - BR	Cruise control main switch circuit	MAIN switch hold ON	Below 1 V

DIAGNOSIS SYSTEM

1. DESCRIPTION

The ECU controls the cruise control system of the vehicle. The data and DTCs relating to the cruise control system can be read from the DLC3 of the vehicle. If either DTC is not displayed when checking for DTCs, there may be a problem with the combination meter or the CAN communication and multiplex communication system. Use the intelligent tester to check and solve the problem.

2. CHECK DLC3

(a) The vehicle's ECM uses ISO 9141-2 for communication. The terminal arrangement of the DLC3 complies with SAE J1962 and matches the ISO 9141-2 format.

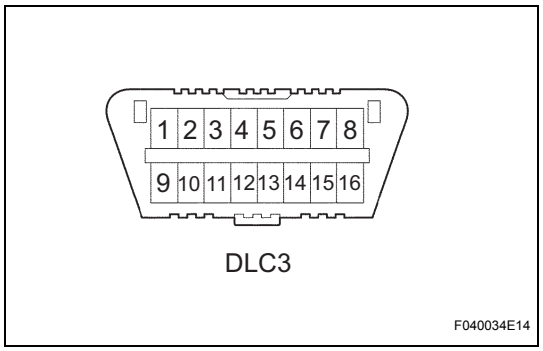

Symbols (Terminal No.)	Terminal Description	Condition	Specified Condition
SIL(7) - SG(5)	Bus "+" line	During transmission	Pulse generation
CG(4) - Body ground	Chassis ground	Always	Below 1 Ω
SG(5) - Body ground	signal ground	Always	Below 1 Ω
BAT(16) - Body ground	Battery positive	Always	11 to 14 V
CANH(6) - CANL(14)	HIGH-level CAN bus line	Ignition switch off	54 to 67 Ω
CANH(6) - Body ground	HIGH-level CAN bus line	Ignition switch off	1MΩ or higher
CANH(6) - CG(4)	HIGH-level CAN bus line	Ignition switch off	3kΩ or higher
CANL(14) - Body ground	LOW-level CAN bus line	Ignition switch off	1MΩ or higher
CANL(14) - CG(4)	LOW-level CAN bus line	Ignition switch off	3kΩ or higher

HINT:

If the display shows a communication error message when you have connected the intelligent tester to the DLC3, turned the ignition switch to the on (IG) position and operated the tester, there is a problem on either the vehicle side or the tool side.

- If communication is normal when the tool is connected to anther vehicle, inspect the DLC3 on the original vehicle.
- If communication is still impossible when the tool is connected to another vehicle, the problem is probably in the tool itself, so consult the Service Department listed in the tool's instruction manual.

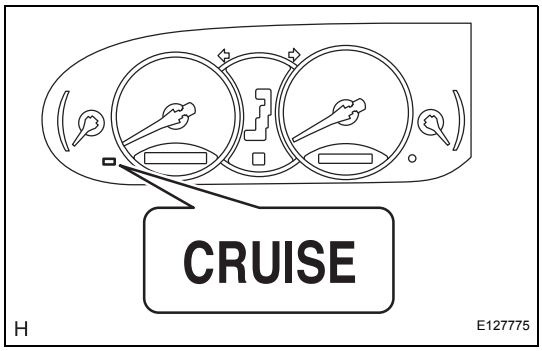

3. CHECK INDICATOR

(a) Turn the ignition switch on (IG).

CC

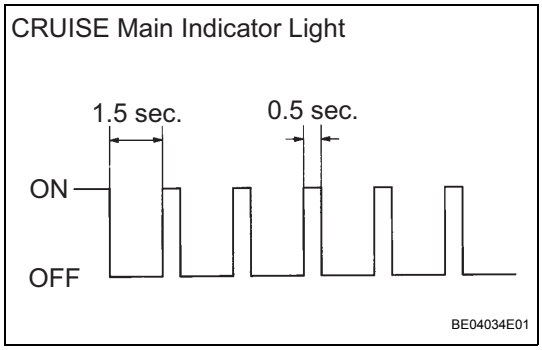

(b) Check that the CRUISE main indicator light illuminates when the cruise control main switch is turned ON, and that the indicator light turns off when the main switch is turned OFF. If the results are not as specified, inspect the CRUISE main indicator light circuit (See page CC-28).

HINT:

- While driving with cruise control, the hybrid vehicle control ECU activates AUTO CANCEL of the cruise control system when a malfunction in one of the following occurs: vehicle speed sensors, stop light switch or other related parts. When AUTO CANCEL is activated, the CRUISE main indicator light outputs the blinking pattern shown to the left. At the same time, data of the malfunction is stored as a DTC.

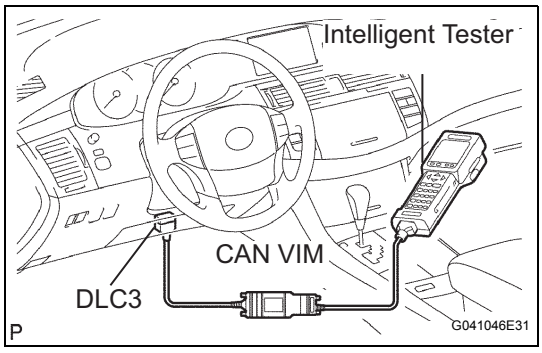

DTC CHECK / CLEAR

1. DTC CHECK

(a) Connect the intelligent tester to the DLC3.

(1) Connect the intelligent tester to the Controller Area Network Vehicle Interface Module (CAN VIM). Then connect the CAN VIM to the Data Link Connector 3 (DLC3).

(b) Turn the ignition switch on (IG).

(c) Read the DTCs by following the prompts on the tester screen.

HINT:

Refer to the intelligent tester operator's manual for further details.

2. DTC CLEAR

(a) Connect the intelligent tester to the DLC3.

(b) Turn the ignition switch on (IG).

(c) Operate the intelligent tester to erase the codes.

HINT:

Refer to the intelligent tester operator's manual for further details.

FAIL-SAFE CHART

1. If the following conditions are detected while the cruise control is in operation, the system clears the stored vehicle speed in the hybrid vehicle control ECU and cancels the cruise control operation.

Vehicle Condition	Auto Cancel Condition	Re-operation Condition
CRUISE main indicator light blinks	• There is open or short in stop light switch circuit • There is problem with vehicle speed signal • There is problem with throttle position sensor and motor	Turn cruise control main switch on again
CRUISE main indicator light blinks	• There is problem with input circuit of stop light switch circuit • There is problem with cancel circuit	• Turn cruise control main switch on again • Turn engine switch off
CRUISE main indicator light goes off	• Vehicle speed is lower than low speed limit (approx. 40 km/h (25 mph)) while running with cruise control on • Vehicle speed is lower than stored speed by approx. 16 km/h (9.9 mph) or more	Push cruise control main switch to RESUME/ ACCEL

DATA LIST / ACTIVE TEST

1. READ DATA LIST

(a) While the intelligent tester is connected to the DLC3 with the ignition switch turned on (IG), the CRUISE CONTROL data list can be displayed. Follow the prompts on the tester screen to access the data list.

CC (ECM):

Item	Measurement Item / Display (Range)	Normal Condition	Diagnostic Note
VEHICLE SPD	Vehicle speed / min.: 0 km/h (0 mph), max.: 255 km/h (158 mph)	Actual vehicle speed	-
MEMORY SPD	Cruise control memorized speed / min.: 0 km/h (0 mph), max.: 255 km/h (158 mph)	Actual stored vehicle speed	-
RQST TORQUE	Cruise request torque / min.: -1,024 N*m, max.: 1016 N*m	Actual torque	-
CRUISE CONTROL	Cruise control system active condition / ON or OFF	ON: Cruise control activated OFF: Cruise control inactivated	-
MAIN SW (MAIN)	Main switch signal (Main CPU) / ON or OFF	ON: Main switch ON (Pushed on) OFF: Main switch OFF (Pushed off)	"3"
CCS READY M	Cruise control system standby condition (Main CPU) / ON or OFF	ON ←→ OFF: Change ON/OFF each time Main SW is pushed in.	"1"
CCS INDICATOR M	Cruise indicator signal (Main CPU) / ON or OFF	ON: "CCS READY" ON OFF: "CCS READY" OFF	"2"
CANCEL SW	CANCEL switch signal / ON or OFF	ON: CANCEL switch ON OFF: CANCEL switch OFF	-
SET/- SW	SET/- SW signal / ON or OFF	ON: SET/- SW ON OFF: SET/- SW OFF	-
RES/+ SW	RES/+ SW signal / ON or OFF	ON: RES/+ SW ON OFF: RES/+ SW OFF	-
STP LIGHT SW M	Stop light SW signal (Main CPU) / ON or OFF	ON: Brake pedal depressed OFF: Brake pedal released	-
SHIFT D POS	PNP SW signal (D position) / ON or OFF	ON: Shift position D OFF: Any shift position except D	-

HINT:
"3" is OK but "1" is NG →ECM failure
"1" is OK but "2" is NG → DTC output or ECM failure
"3" is OK but cruise indicator not turn on → CRUISE MAIN indicator or wire harness or ECM failure

2. ACTIVE TEST

HINT:
Performing the ACTIVE TEST using the intelligent tester allows components such as the relay, VSV, and actuator to operate with out parts removal. Performing the ACTIVE TEST as the first step of troubleshooting is one way to shorten labor time.
It is possible to display the DATA LIST during the ACTIVE TEST.

(a) Connect the intelligent tester to the DLC3.
(b) turn the ignition switch on (IG).

(c) According to the display on the tester, perform the "ACTIVE TEST".
HINT:
The ignition switch must be turned on (IG) to proceed with the ACTIVE TEST using the intelligent tester.

COMBINATION METER ASSEMBLY:

Item	Vehicle Condition / Test Details	Diagnostic Note
CRUISE INDIC	"CRUISE" indicator is ON / OFF	-

DIAGNOSTIC TROUBLE CODE CHART

HINT:
If a trouble code is displayed during the DTC check, check the circuit listed for that code. For details of each code, refer to the "See page" in the DTC chart.

DTC No.	Detection Item	Trouble Area	See page
P0571	Brake Switch "A" Circuit	- Stop light switch assembly - Stop light switch assembly circuit - Driver side J/B ECU - ECM	CC-19
P0607	Control Module Performance	- ECM	CC-22
P0500	Vehicle Speed Sensor Malfunction	- Vehicle speed sensor - Vehicle speed sensor signal circuit - ECM	CC-18
P0503	Vehicle Speed Sensor Circuit Malfunction	- Vehicle speed sensor - Vehicle speed sensor signal circuit - ECM	CC-18

DTC	P0500	Vehicle Speed Sensor Malfunction

DTC	P0503	Vehicle Speed Sensor Circuit Malfunction

DESCRIPTION

See page ES-262.

DTC No.	DTC Detection Condition	Trouble Area
P0500	This trouble code is output when the vehicle speed signal from the vehicle speed sensor is cut for 0.14 sec. or more while the cruise control is in operation.	• Vehicle speed sensor • Vehicle speed sensor signal circuit • ECM
P0503	Momentary interruption and noise are detected when a rapid change of vehicle speed occurs while the cruise control is in operation.	• Vehicle speed sensor • Vehicle speed sensor signal circuit • ECM

WIRING DIAGRAM

See page ES-262.

INSPECTION PROCEDURE

See page ES-262.

DTC	P0571	Brake Switch "A" Circuit

DESCRIPTION

When the brake pedal is depressed, the stop light switch assembly sends a signal to the ECM. When the ECM receives this signal, it cancels the cruise control.
Fail-safe function operates to enable normal driving even if there is a malfunction in the stop light signal circuit.
The cancel condition occurs when positive battery voltage is applied to terminal STP.
When the brake is applied, positive battery voltage is normally applied to terminal STP of the ECM through the STOP fuse and the stop light switch assembly, and the ECM turns the cruise control off.

DTC No.	DTC Detection Condition	Trouble Area
P0571	The malfunction code is output when the voltage of the STP terminal and that of the ST1- terminal on the ECM are less than 1 V for 0.5 sec. or more.	• Stop light switch assembly • Stop light switch assembly circuit • Driver side J/B ECU • ECM

WIRING DIAGRAM

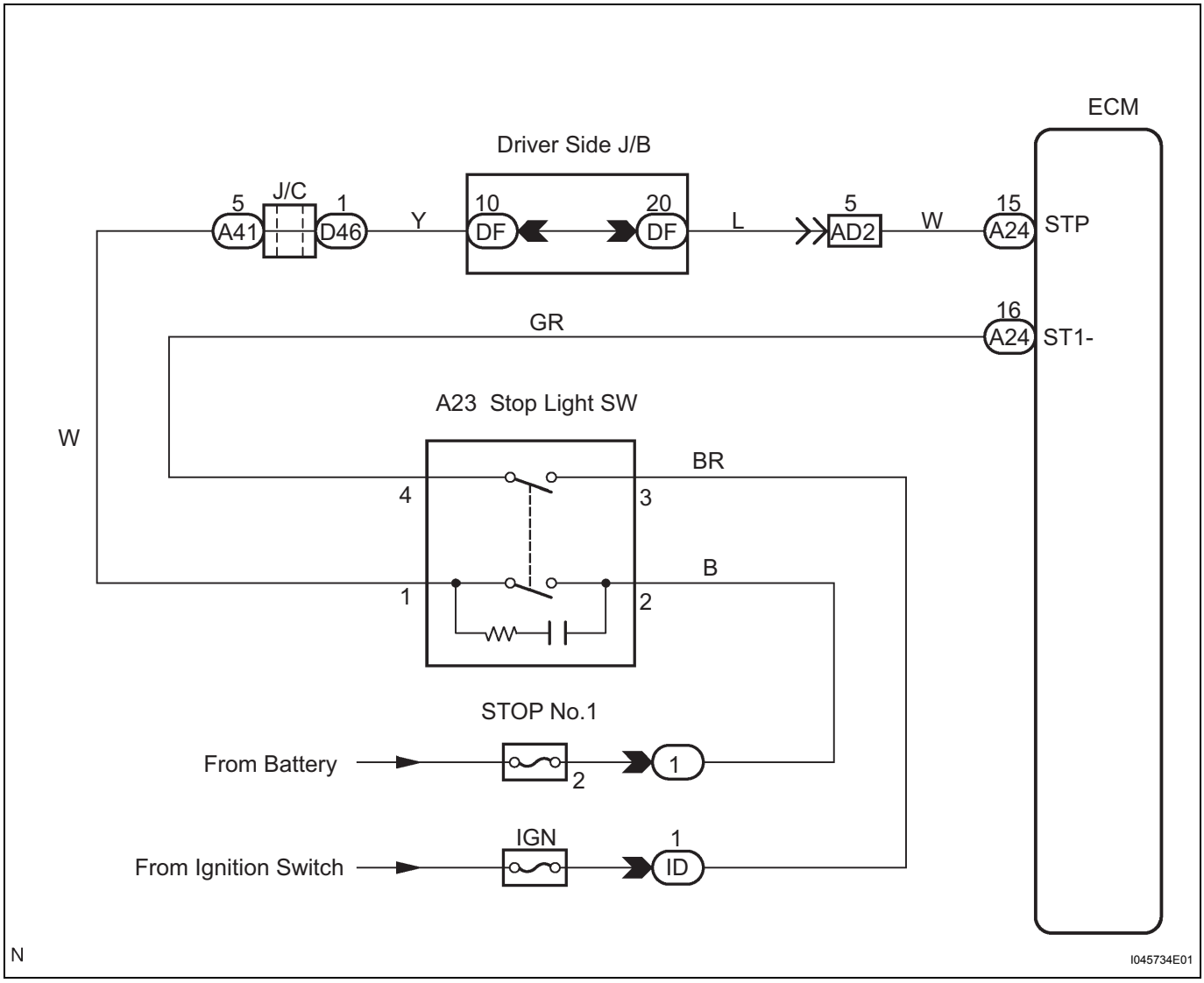

INSPECTION PROCEDURE

1	READ VALUE OF INTELLIGENT TESTER

(a) Connect the intelligent tester to the DLC3.
(b) Turn the ignition switch on, and turn the intelligent tester main switch on.
(c) Check the DATA LIST for proper functioning of the stop light switch.

CC (ECM):

Item	Measurement Item / Display (Range)	Normal Condition	Diagnostic Note
STP LIGHT SW M	Stop light switch signal (Main CPU) / ON or OFF	ON: Brake pedal depressed OFF: Brake pedal released	-

OK:
When brake pedal operation is performed the results will be same as above.

OK → **REPLACE ECM**

NG

2	INSPECT STOP LIGHT SWITCH

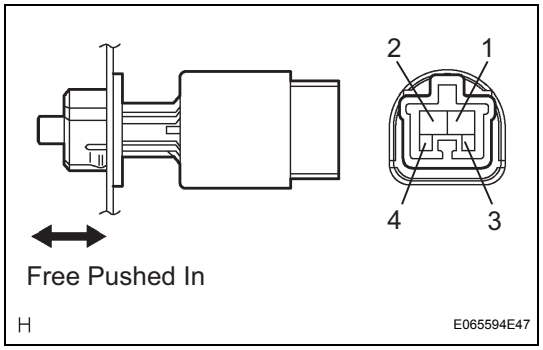

(a) Disconnect the stop light switch connector.
(b) Measure the resistance according to the value(s) in the table below.
Standard resistance

Tester Connection	Switch Condition	Specified Condition
1 - 2	Switch pin not pushed	Below 1 Ω
3 - 4	Switch pin not pushed	10 kΩ or higher
1 - 2	Switch pin pushed	10 kΩ or higher
3 - 4	Switch pin pushed	Below 1 Ω

NG → **REPLACE STOP LIGHT SWITCH**

OK

3	CHECK WIRE HARNESS (STOP LIGHT SWITCH - BATTERY)

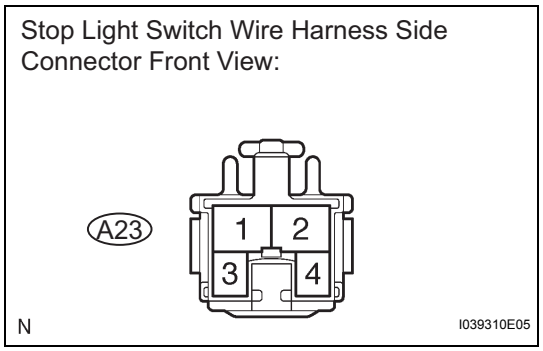

(a) Measure the voltage according to the value(s) in the table below.
Standard voltage

Tester Connection	Condition	Specified Condition
A23-2 - Body ground	Always	10 to 14 V
A23-3 - Body ground	Engine switch on (IG)	10 to 14 V

NG → **REPAIR OR REPLACE HARNESS OR CONNECTOR**

OK

4	CHECK ECM

(a) Reconnect the stop light switch connector.
(b) Disconnect the A24 connectors from the ECM.
(c) Turn the ignition switch on.
(d) Measure the voltage according to the value(s) in the table below.

Standard resistance

Pedal condition	Tester connection	Specification
Depressed	A24-15 (STP) - Body ground	10 to 14 V
Released	A24-15 (STP) - Body ground	Below 1 V

ECM Connector Wire Harness View:

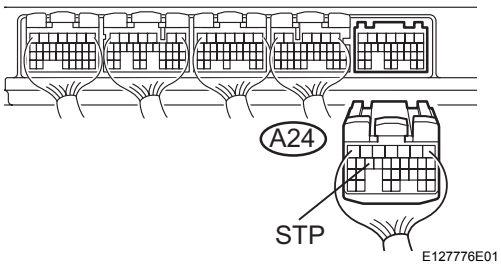

NG → **REPAIR OR REPLACE HARNESS OR CONNECTOR (STOP LIGHT SWITCH - ECM)**

OK

REPLACE ECM

CC

DTC	P0607	Control Module Performance

DESCRIPTION

This DTC indicates the internal abnormalities of the ECM.

DTC No.	DTC Detection Condition	Trouble Area
P0607	The ECM has a supervisory CPU and a control ECU inside. When each input STP signal is different for 0.15 sec. or more, this trouble code is output. This trouble code is output after 0.4 sec. has passed from the time the cruise cancel input signal (STP input) is input into the ECM.	• ECM

HINT:
The ECM receives signals from each sensor to control all the functions of the cruise control with the microcomputer.
When a trouble code is detected, fail-safe remains on until the ignition switch is turned off.

INSPECTION PROCEDURE

1	REPLACE ECM

Cruise Control Switch Circuit

DESCRIPTION

The cruise control main switch operates 7 functions: SET, COAST, TAP-DOWN, RESUME, ACCEL, TAP-UP, and CANCEL. The SET, TAP-DOWN and COAST functions, and the RESUME, TAP-UP and ACCEL functions are operated with the same switch. The cruise control main switch is an automatic return type switch which turns on only while operating it in each arrow direction and turns off after releasing it. The internal contact point of the cruise control main switch is turned on with the switch operation. Then the ECM reads the resistance value that has been changed by the switch operation to control SET, COAST, RESUME, ACCEL and CANCEL.

CC

WIRING DIAGRAM

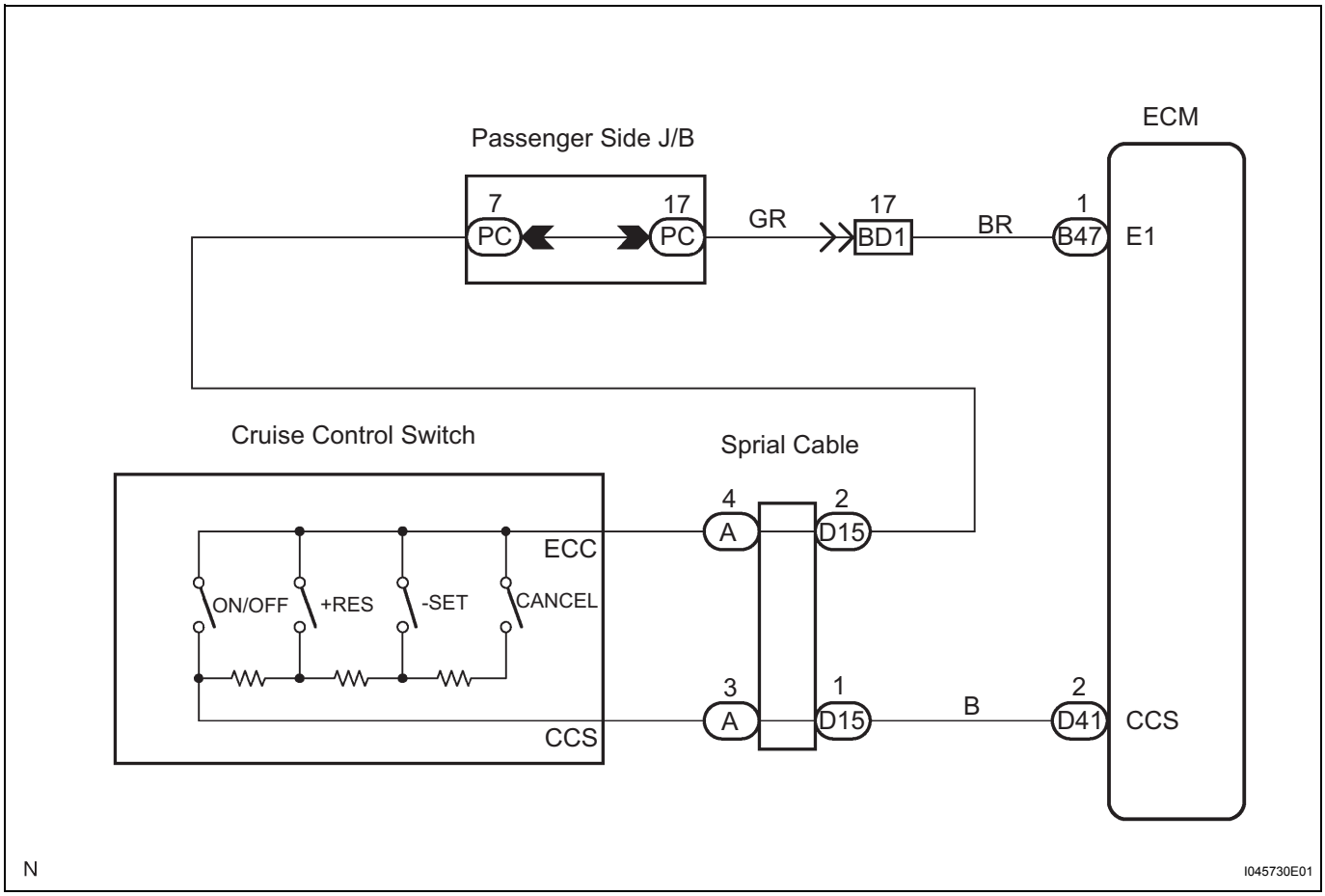

INSPECTION PROCEDURE

1	READ VALUE OF INTELLIGENT TESTER

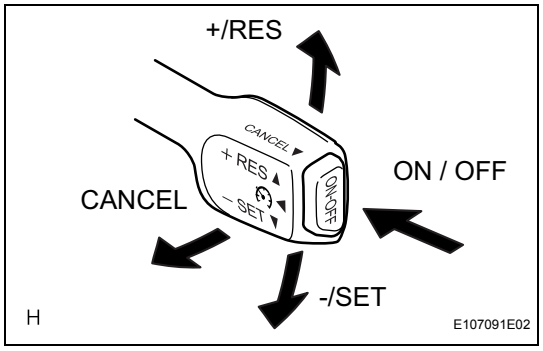

(a) Connect the intelligent tester to the DLC3.
(b) Turn the ignition switch on, and turn the intelligent tester main switch on.
(c) Check the DATA LIST for proper functioning of the cruise control main switch.

CC

CC (ECM):

Item	Measurement Item / Display (Range)	Normal Condition	Diagnostic Note
MAIN SW (MAIN)	Main SW signal (Main CPU) / ON or OFF	ON: Main SW ON (Pushed on) OFF: Main SW OFF (Pushed off)	-
CANCEL SW	CANCEL SW signal / ON or OFF	ON: CANCEL SW ON OFF: CANCEL SW OFF	-
SET/COAST SW	SET/- SW signal / ON or OFF	ON: SET/- SW ON OFF: SET/- SW OFF	-
RES/ACC SW	RES/+ SW signal / ON or OFF	ON: RES/+ SW ON OFF: RES/+ SW OFF	-

OK:
When cruise control main switch operation is performed the results will be same as above.

Result:

Result	Proceed to
OK	A
NG (All items are defective.)	B
NG (One to four items are defective.)	C

A → **PROCEED TO NEXT CIRCUIT INSPECTION SHOWN IN PROBLEM SYMPTOMS TABLE**

C → **REPLACE CRUISE CONTROL MAIN SWITCH**

B

2	INSPECT CRUISE CONTROL MAIN SWITCH

(a) Disconnect the cruise control main switch connector.

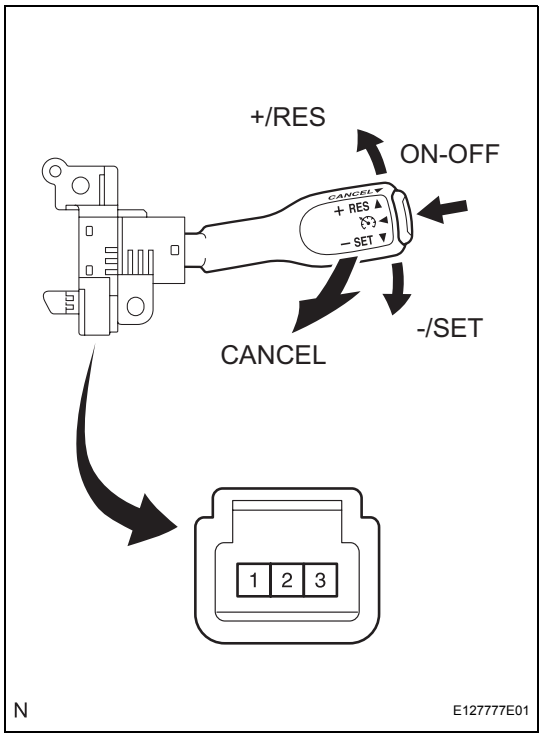

(b) Measure the resistance according to the value(s) in the table below.

Standard resistance

Switch Condition	Tester Connection	Specified Condition
Neutral	1 - 3	10 kΩ or higher
+/RES	1 - 3	210 to 270 Ω
-/SET	1 - 3	560 to 700 Ω
CANCEL	1 - 3	1,380 to 1,700 Ω
Main Switch OFF	1 - 3	10 kΩ or higher
Main Switch ON	1 - 3	Below 1 Ω

NG → REPLACE CRUISE CONTROL MAIN SWITCH

OK

3 INSPECT SPIRAL CABLE

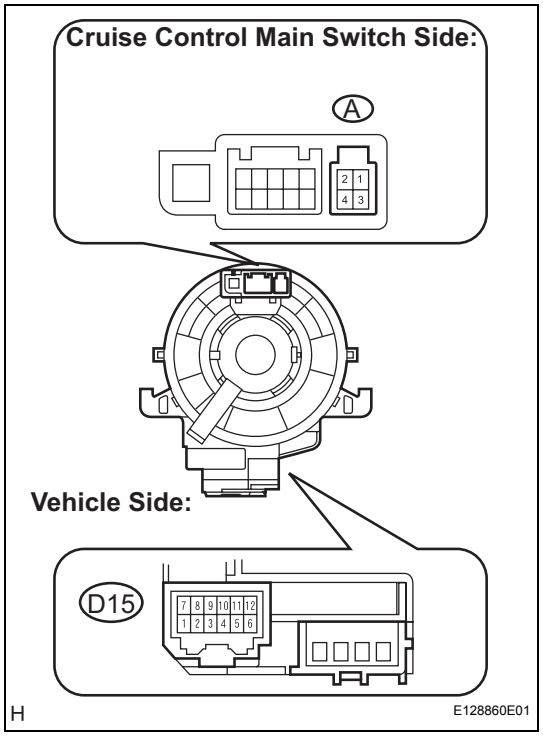

(a) Disconnect the spiral cable connector.
(b) Measure the resistance according to the value(s) in the table below.

Standard resistance

Tester Connection	Specified Condition
A-3 - D15-1	Below 1 Ω
A-4 - D15-2	Below 1 Ω

CC

NG → **REPLACE SPIRAL CABLE**

OK

4 CHECK WIRE HARNESS (SPIRAL CABLE - ECM AND BODY GROUND)

Vehicle Side Connector Front View:

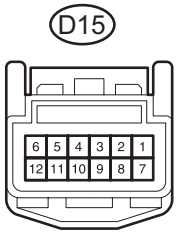

Wire Harness View:

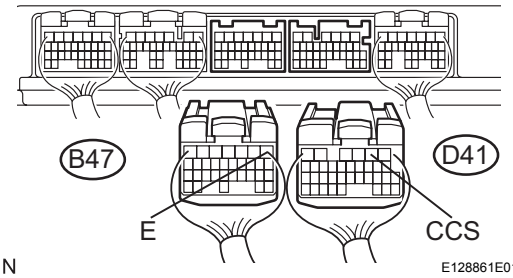

(a) Measure the resistance according to the value(s) in the table below.

Standard resistance

Tester Connection	Condition	Specified Condition
Spiral cable (D15-1) - CCS (D41-2)	Always	Below 1 Ω
CCS (D41-2) - Body ground	Always	10 kΩ or higher
Spiral cable (D15-2) - E1 (B47-1)	Always	Below 1 Ω

NG → **REPAIR OR REPLACE HARNESS OR CONNECTOR**

OK

PROCEED TO NEXT CIRCUIT INSPECTION SHOWN IN PROBLEM SYMPTOMS TABLE

Cruise Main Indicator Light Circuit

DESCRIPTION

- The ECM detects a cruise control switch signal and sends it to the combination meter via CAN and BEAN. Then the CRUISE main indicator light comes on.
- The CRUISE main indicator light circuit uses CAN and BEAN for communication. If there is a malfunction in this circuit, check for DTCs in the CAN communication system and multiplex communication system before troubleshooting this circuit.

INSPECTION PROCEDURE

1	PERFORM ACTIVE TEST BY INTELLIGENT TESTER

(a) Connect the intelligent tester to the DLC3.
(b) Check the CRUISE main indicator light by using ACTIVE TEST.

Combination Meter:

Item	Test Details	Diagnostic Note
CRUISE INDIC	"CRUISE" indicator is ON/OFF	-

OK:
Indicator light comes on / goes off.

NG → **REPLACE COMBINATION METER**

OK

2	READ VALUE OF INTELLIGENT TESTER

(a) Connect the intelligent tester to the DLC3.
(b) Turn the ignition switch on (IG), and turn the intelligent tester main switch on.
(c) Check the DATA LIST for proper functioning of the CRUISE main indicator light.

CC (ECM):

Item	Measurement Item / Display (Range)	Normal Condition	Diagnostic Note
CCS INDICATOR M	Cruise indicator signal (Main CPU) / ON or OFF	ON: "CCS READY" ON OFF: "CCS READY" OFF	-

OK:
When cruise control main switch operation is performed, the result will be same as above.

NG → **REPLACE ECM**

OK

PROCEED TO NEXT CIRCUIT INSPECTION SHOWN IN PROBLEM SYMPTOMS TABLE

TC and CG Terminal Circuit

DESCRIPTION

Connecting terminals TC and CG of the DLC3 causes the system to enter self-diagnostic mode. If a malfunction is present, DTCs will be output.
HINT:
When a particular warning light remains blinking, a ground short in the wiring of terminal TC of the DLC3 or an internal ground short in the relevant ECU is suspected.

WIRING DIAGRAM

CC

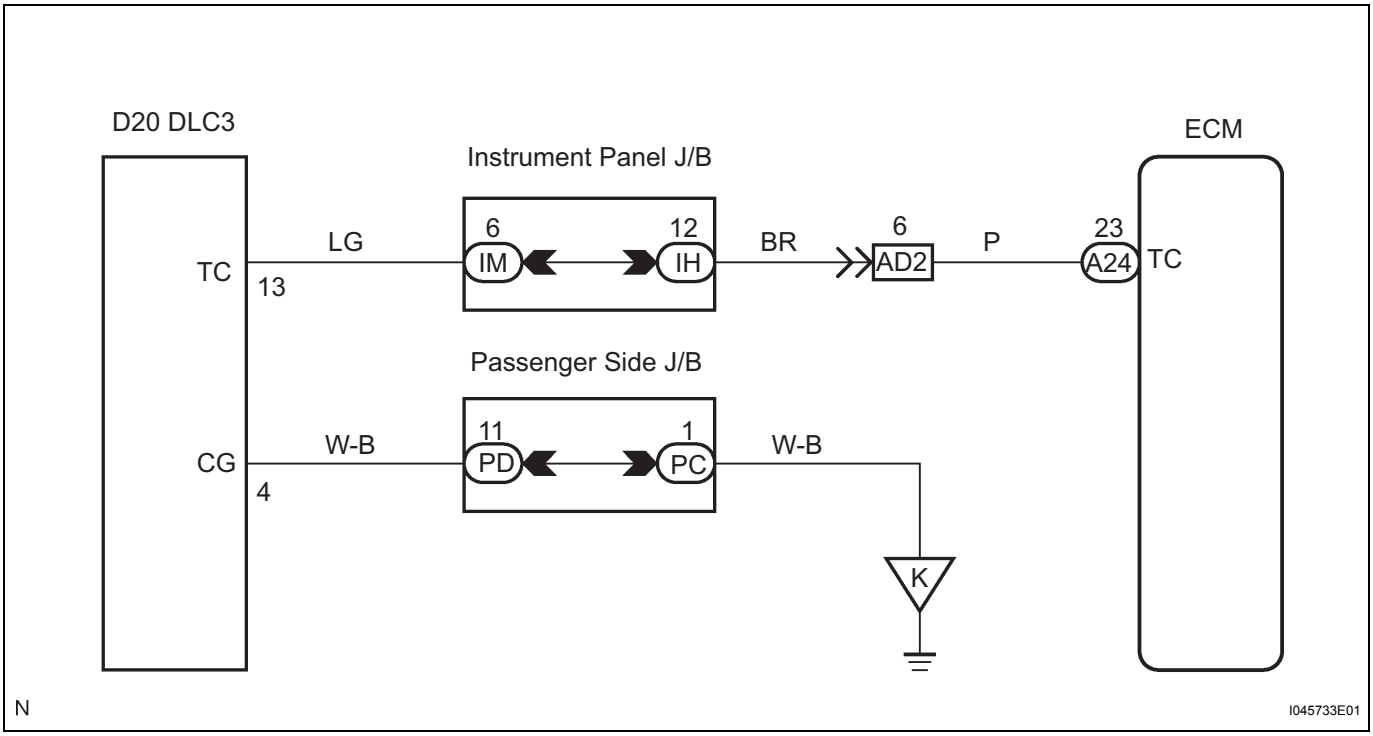

INSPECTION PROCEDURE

1	**CHECK WIRE HARNESS (TC of DLC3 - ECM)**

(a) Disconnect the A24 connector from the ECM.

DLC3:

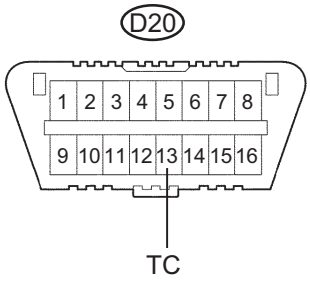

ECM Connector Wire Harness View:

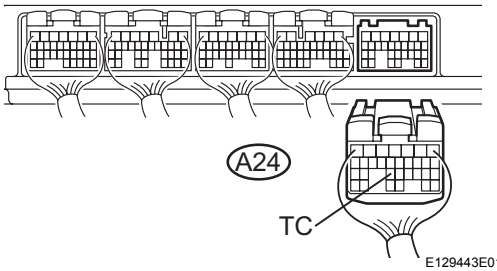

(b) Measure the resistance according to the value(s) in the table below.

Standard resistance

Tester Connection	Condition	Specified Condition
TC (A24-23) - TC (D20-13)	Always	Below 1 Ω

NG → **REPAIR OR REPLACE HARNESS OR CONNECTOR (DLC3 - ECM)**

OK

2 CHECK WIRE HARNESS (CG of DLC3 - BODY GROUND)

DLC3:

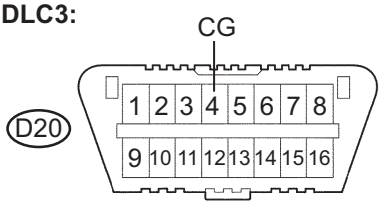

(a) Measure the resistance according to the value(s) in the table below.

Standard resistance

Tester connection	Condition	Specified condition
CG (D20-4) - Body ground	Always	Below 1 Ω

NG → **REPAIR OR REPLACE HARNESS OR CONNECTOR (DLC3 - BODY GROUND)**

OK

3 CHECK WIRE HARNESS (TC of DLC3 - BODY GROUND)

DLC3:

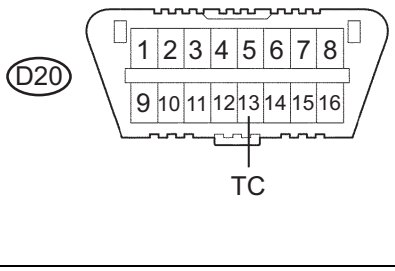

(a) Measure the resistance according to the value(s) in the table below.

Standard resistance

Tester Condition	Condition	Specified Condition
CG (D20-13) - Body ground	Always	10 kΩ or higher

NG → **REPAIR OR REPLACE WIRE HARNESS OR EACH ECU**

CC

OK

REPLACE ECM

DYNAMIC LASER CRUISE CONTROL SYSTEM

PRECAUTION

NOTICE:
When disconnecting the negative (-) battery terminal, initialize the following system after the terminal is reconnected.

System Name	See procedure
Sliding Roof Control System	IN-29
Power Window Control System	

1. EXPRESSIONS OF IGNITION SWITCH

The type of ignition switch used on this model differs according to the specifications of the vehicle.
The expressions listed in the table below are used in this section.

Switch Type / Expression	Ignition Switch (position)	Engine Switch (condition)
Ignition Switch off	LOCK	Off
Ignition Switch on (IG)	ON	On (IG)
Ignition Switch on (ACC)	ACC	On (ACC)
Engine Start	START	Start

F053330E08

2. KEEP IN MIND THE FOLLOWING POINTS WHEN INSPECTING THE DYNAMIC LASER CRUISE CONTROL SYSTEM

- As there is a limitation on the vehicle-to-vehicle distance controlling capability, do not overly rely on the dynamic radar cruise control system.
- Do not neglect to pay constant attention to the vehicle-to-vehicle distance and the traffic conditions when using the dynamic radar cruise control system. Decelerate with the brake pedal, or accelerate with the accelerator pedal, according to the situation, to keep an appropriate distance with the vehicle in front.

- When the vehicle in front decelerates rapidly or another vehicle moves in front of the vehicle, decelerating in time to avoid a collision may not be possible without additional braking.
- The dynamic radar cruise control system is designed to assist in maintaining an appropriate distance with the vehicle in front. However, the system alone is not sufficient. It is imperative that the driver pays attention at all times.
- The millimeter wave radar sensor has functions to automatically detect dirt on the sensor face and inform the driver, but is not perfect. Keep the sensor face clean.
- The dynamic radar cruise control system does not work, or give vehicle-approaching warning, for vehicles which are stopped or driving at significantly slower speeds. Always pay attention to those other vehicles.
- The millimeter wave radar sensor detection area is narrow at close range, so detection of a vehicle moving just in front may be delayed, or a motorcycle running on the side of the same lane may not be detected. The distance to the vehicle in front may not be maintained properly due to these reasons.
- Even if ACCEL is operated to increase the set vehicle speed, the vehicle does not accelerate because the speed is controlled in accordance with the speed of the vehicle in front while driving with the vehicle-to-vehicle distance control mode on (follow-up cruising). However, as the set vehicle speed has been increased by ACCEL operation, the vehicle keeps accelerating when there is no vehicle in front. Check the set speed with the set vehicle speed indication on the display.
- The controlled vehicle distance may be shorter than the set vehicle distance when cruising on a long downhill road.
- The cruise control main switch must be turned OFF and then ON if all of the following occur: 1) the CRUISE main indicator light blinks, 2) the master warning light illuminates at the same time as a "pong" sound, and 3) the fail message is shown on the display.
- The vehicle-approaching warning buzzer does not sound in the constant speed control mode because the presence of the vehicle in front and the distance to it are not judged as in the vehicle-to-vehicle distance control mode. Pay attention to the distance to the vehicle in front.
- The dynamic radar cruise control system has 2 cruise control modes: the constant speed control mode and vehicle-to-vehicle distance control mode. Confirm which mode is selected when using the dynamic radar cruise control system.

PARTS LOCATION

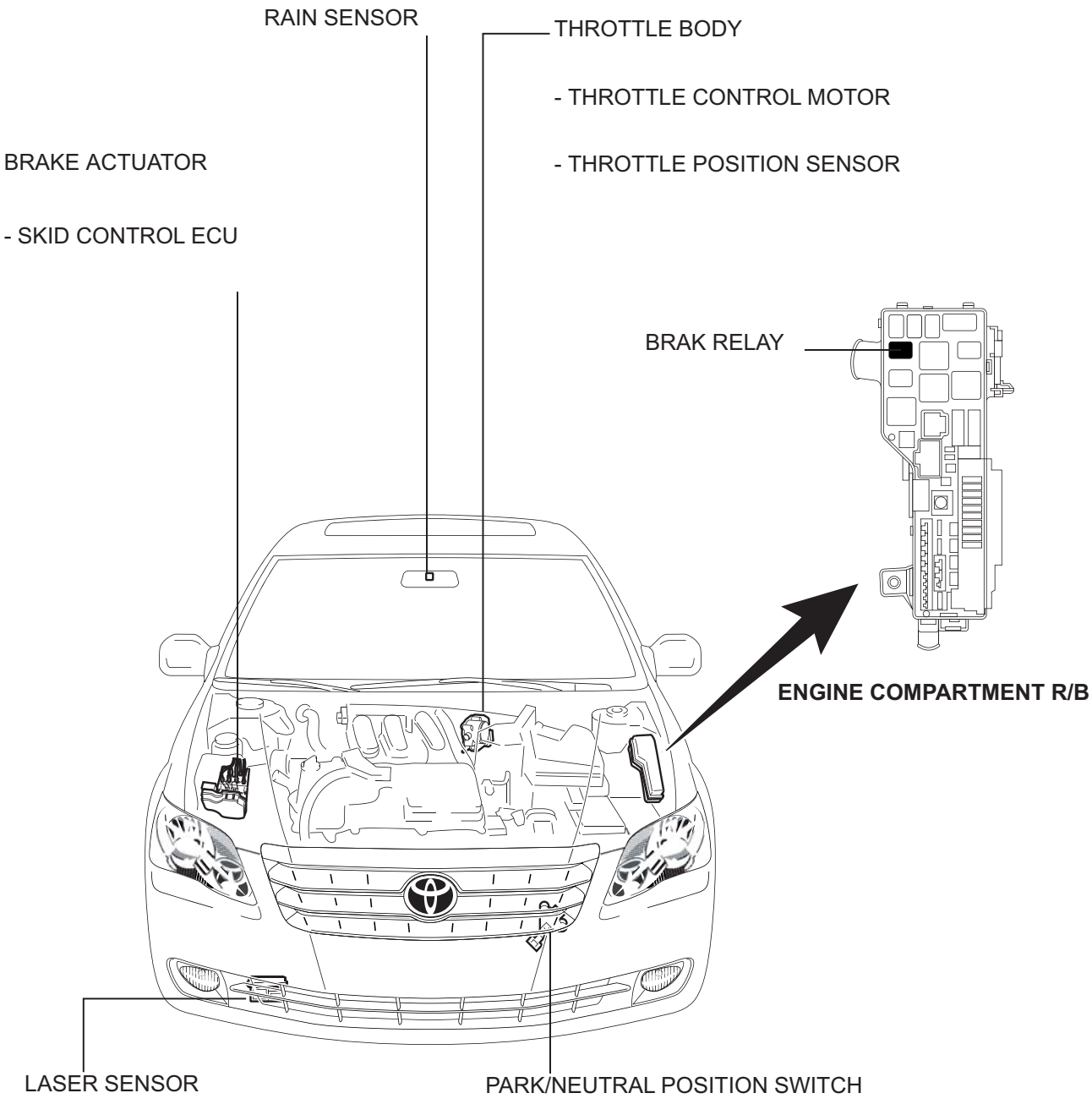

C

E112705E02

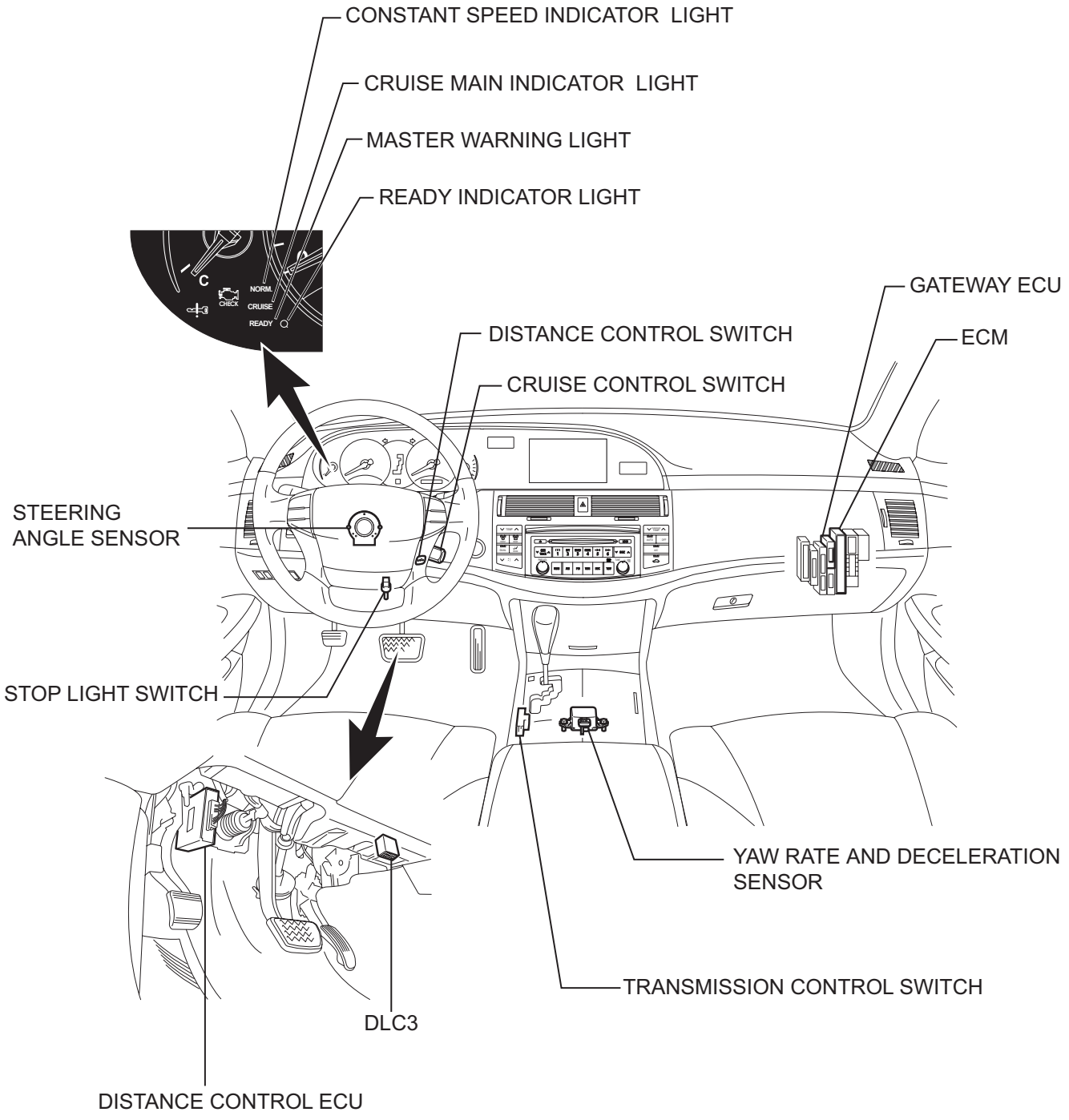

C

E112673E08

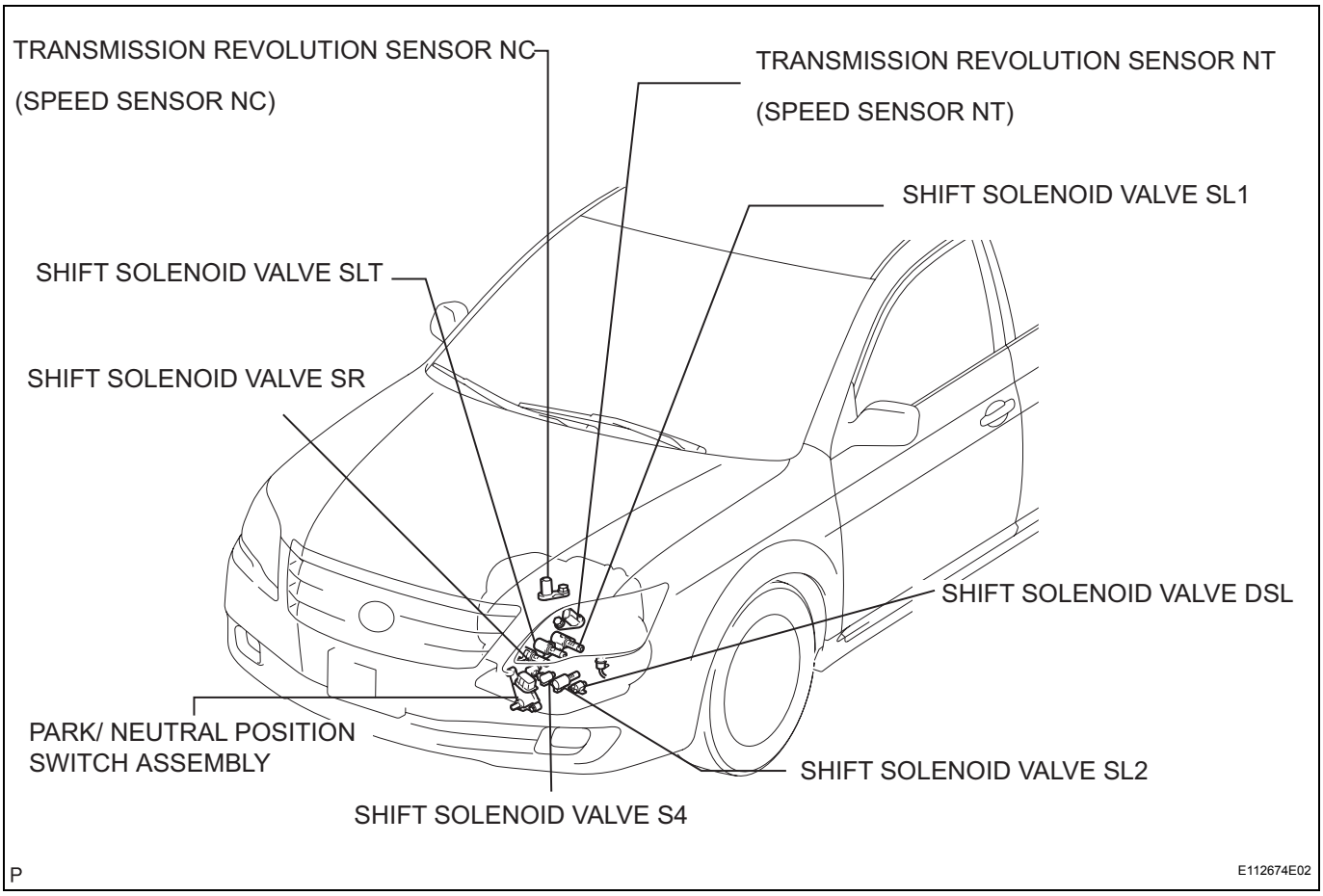
TRANSMISSION REVOLUTION SENSOR NC
(SPEED SENSOR NC)
TRANSMISSION REVOLUTION SENSOR NT
(SPEED SENSOR NT)
SHIFT SOLENOID VALVE SL1
SHIFT SOLENOID VALVE SLT
SHIFT SOLENOID VALVE SR
SHIFT SOLENOID VALVE DSL
PARK/ NEUTRAL POSITION
SWITCH ASSEMBLY
SHIFT SOLENOID VALVE SL2
SHIFT SOLENOID VALVE S4
P
E112674E02

CC

SYSTEM DIAGRAM

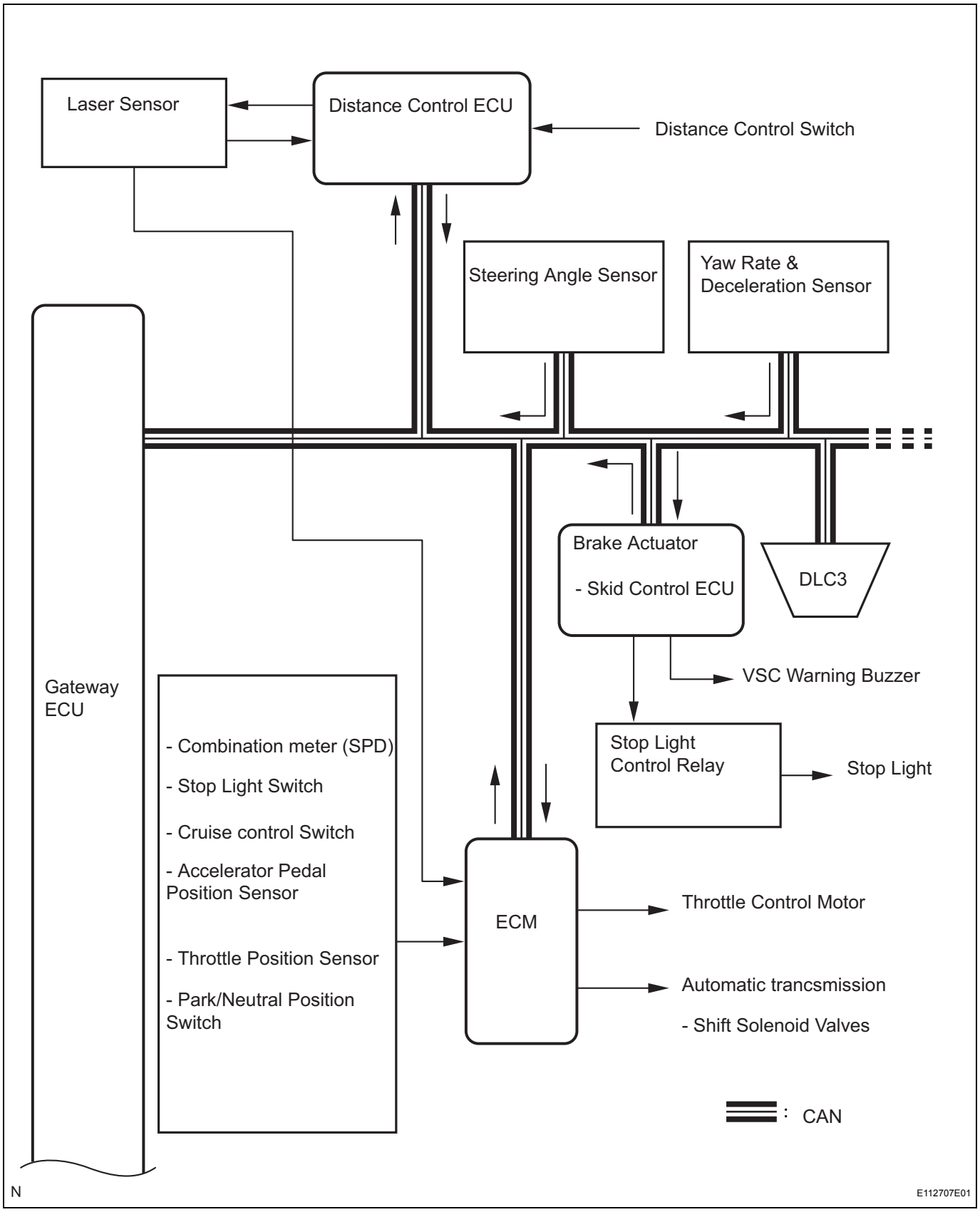

CC

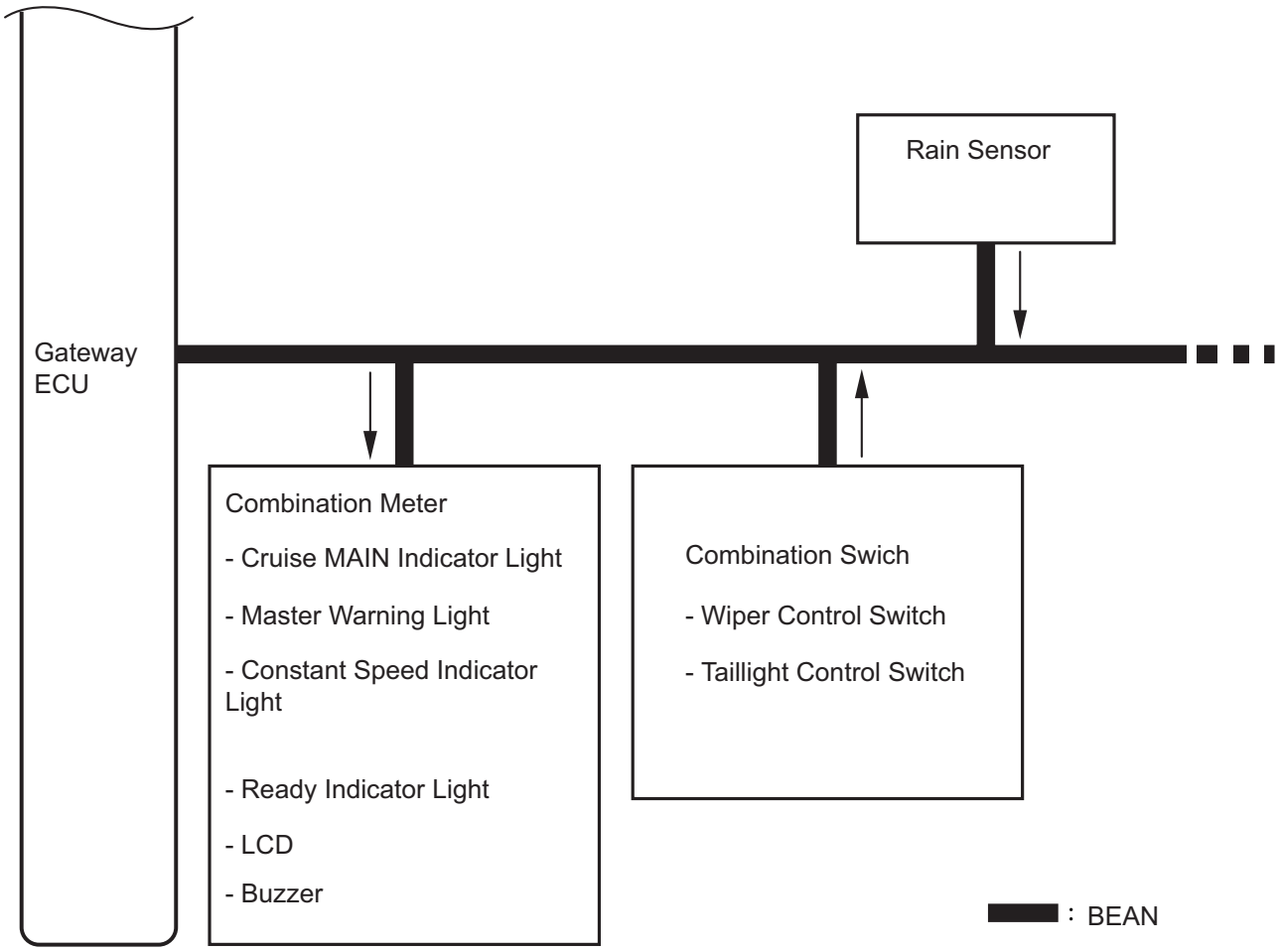

N

E112713E01

Communication table:

Transmitting ECU (transmitter)	Receiving ECU	Signals	Communication method
Laser Sensor	Distance Control ECU (Cruise Control ECU)	• Vehicle-to-vehicle distance signal • Preceding vehicle detection signal • Relative acceleration rate signal • Relative vehicle speed signal • Width and position of object ahead signal • Diagnosis data signal	Serial
Laser Sensor	ECM	• Laser sensor operation signal	Wire
Distance Control ECU (Cruise Control ECU)	Laser Sensor	• Actual vehicle speed signal • Estimated curve radius signal • Laser sensor illumination request signal • Wiper condition signal • Cruise control switch signal • Set distance signal • Beam axis adjustment data signal	Serial
Distance Control ECU (Cruise Control ECU)	ECM	• Target acceleration rate signal • Target deceleration rate signal • Vehicle-to-vehicle distance signal • Preceding vehicle detection signal • Brake axis deviation signal • Laser sensor grime signal • Bad weather detection signal • Gear request signal • Diagnosis data signal	CAN
Distance Control ECU (Cruise Control ECU)	Combination Meter	• Display data signal	BEAN and CAN
Distance Control Switch	Distance Control ECU	• Distance control switch	Wire
Yaw Rate & Deceleration Sensor	Distance Control ECU	• Yaw rate signal	CAN
Steering Angle Sensor	Distance Control ECU	• Steering angle signal	CAN
ECM	Distance Control ECU	• Setting vehicle speed signal • Actual vehicle speed signal • Cruise control switch (main switch) signal • Set distance signal • Brake request response signal • Accelerator pedal idle signal • Stop light signal • Transmission information signal	CAN
ECM	Skid Control ECU	• Target deceleration rate signal • Target deceleration rate gradient signal • Brake request signal	CAN
ECM	Combination meter	• Cruise control switch signal	BEAN and CAN
Skid Control ECU	Distance Control ECU (Cruise Control ECU)	• Yaw rate zero point information signal	CAN
Skid Control ECU	ECM	• Cruise control cancel request signal • Brake request response signal	CAN
Rain Sensor	Combination Switch	• Raindrop volume signal	Wire
Combination Switch	Distance Control ECU (Cruise Control ECU)	• Wiper operation signal • Wiper control switch signal • Taillight control switch signal	CAN
Combination Switch	ECM	• Wiper control switch signal	CAN

Transmitting ECU (transmitter)	Receiving ECU	Signals	Communication method
ECM	Combination Meter ECU	• Cruise control diagnosis signal (DTC) • Preceding vehicle detection signal • Approach warning signal • Vehicle-to-vehicle distance signal • Laser sensor grime signal • Bad weather detection signal • Vehicle-to-vehicle distance control signal • Vehicle-to-vehicle distance control check mode signal • Vehicle-to-vehicle distance control standby condition signal • Constant speed cruise signal • CRUISE indicator operation signal • Cruise control warning signal • Dynamic laser cruise warning signal • Cruise control vehicle speed signal	• CAN • BEAN (Instrument Panel Bus)
Distance Control ECU (Cruise Control ECU)	Combination Meter ECU	• Laser sensor optical axis deviation signal • Vehicle-to-vehicle distance signal • Preceding vehicle detection signal	• CAN • BEAN (Instrument Panel Bus)
Passenger Side J/B ECU	ECM	• ECT SNOW mode switch signal	• CAN • BEAN (Instrument Panel Bus)
Rain Sensor	Distance Control ECU (Cruise Control ECU)	• LO operation signal • HI operation signal	• CAN • BEAN (Door Bus)
Combination Switch	Distance Control ECU (Cruise Control ECU)	• Turn switch signal • Wiper switch position signal	• CAN • BEAN (Instrument Panel Bus)
Steering Pad Switch (DISP 2)	ECM	• Steering pad switch (DISP 2) signal	• CAN • BEAN (Instrument Panel Bus)
Luggage Compartment J/B ECU	• ECM • Distance Control ECU (Cruise Control ECU)	• Stop light operating condition signal	• CAN • BEAN (Instrument Panel Bus)

SYSTEM DESCRIPTION

1. GENERAL

(a) The dynamic laser cruise control system has two cruise control modes: the constant speed control mode and vehicle-to-vehicle distance control mode.
- The vehicle-to-vehicle distance control mode is always selected when starting up the dynamic laser cruise control system.
- Operation of the constant speed control mode is the same as that for the conventional type cruise control system.

(b) This system maintains the vehicle running at the speed that the driver has set, as long as there are no vehicles ahead in the same lane. Then, the system maintains the vehicle distance that has been set by the driver.
If the system detects a vehicle moving at a slower speed ahead while the driver is driving at a constant speed, it closes the throttle valve to decelerate. If further deceleration is required, the system controls the brake actuator in order to apply the brakes. Thereafter, if there are no vehicles ahead within the set vehicle-to-vehicle distance because either the vehicle ahead or the driver has changed lanes, the system accelerates slowly to reach the set vehicle speed and resumes driving at the constant speed.

(c) The constant speed control mode is designed to maintain a constant cruising speed. The vehicle-to-vehicle distance control mode is designed to control cruising at a constant speed function, deceleration cruising function, follow-up cruising function and acceleration cruising function.

(d) The laser sensor and the distance control ECU (cruise control ECU) control the system while the vehicle- to-vehicle distance control mode is in operation, and send signals to each actuator and ECU.

(e) In vehicle-to-vehicle distance control mode, the dynamic laser cruise control system receives signals from the yaw rate & deceleration sensor and the steering angle sensor. Based on these signals, it then estimates curve radius and compensates for information on the preceding vehicle while turning. It can also compensate for the brake control when approaching another vehicle.

(f) This system judges the existence of a vehicle in front and the distance to it based on the signals from the laser sensor while the vehicle-to-vehicle distance control mode is in operation. Using this information, the system informs the driver of any danger with the warning buzzer, performs brake control, and turns on the stop light when approaching the vehicle in front.

(g) The following illustration shows a control example under the following conditions: own vehicle speed is 100 km/h (62 mph) and the speed of the vehicle in front is 80 km/h (50 mph).

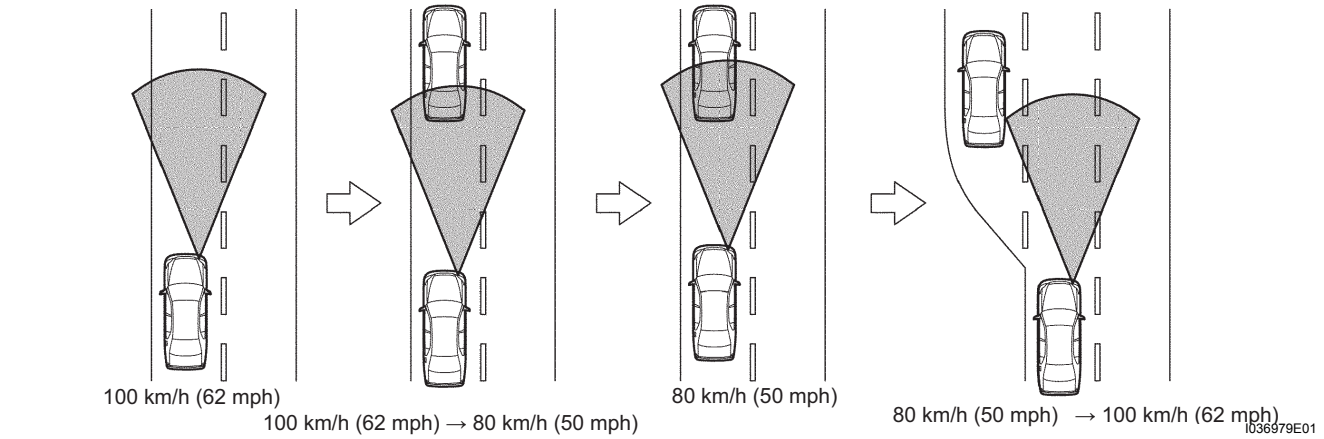

Setting of the vehicle distance can be changed to 3 distances by operating the distance control switch (DISP2 button): long (approximately 75 m (246 ft)), middle (approximately 50 m (164 ft)), and short (approximately 30 m (98 ft)) when vehicle speed is approximately 90 km/h (55 mph).
HINT:

- Vehicle distance increases and decreases in accordance with vehicle speed.
- Controlling condition is indicated on the combination meter multi-information display.

2. FUNCTION OF MAIN COMPONENTS

Item	Outline
Cruise Control Switch (Main Switch)	• Turns on/off the power to the cruise control system
Cruise Control Switch (Control Switch)	• The vehicle speed setting, deceleration setting, preset speed resumption, acceleration setting, and canceling signals are output to the ECM through the operation of this switch. • Switches the control mode: the constant speed control mode and vehicle-to-vehicle distance mode.
Distance Control Switch	• While the system is in the vehicle-to-vehicle distance control mode, the driver can operate the distance control switch to select the vehicle-to-vehicle distance in three stages: long, middle, and short.
Stop Light Switch	• Detects the pressing of the brake pedal and transmits its signal to the ECM.
Wiper Control Switch	• Switches to the beam axis adjustment mode for the laser sensor.
Laser Sensor	• Radiates laser rays forward, uses the reflected rays for detecting the presence of a vehicle being driven ahead, the vehicle-to-vehicle distance, and the relative speed, and transmits these pieces of information to distance control ECU.
Combination Meter	• Transmits the vehicle speed signal (SPD) to the ECM.
Combination Meter (Cruise Main Indicator Light)	• Illuminates when the main switch is on. • If distance control ECU detects a malfunction, this light flashes to warn the driver.
Combination Meter (Master Warning Light)	• Illuminates when there is a malfunction in the system.
Combination Meter (Constant Speed Indicator Light)	• Illuminates during constant speed control mode.

Item	Outline
Combination Meter (Ready Indicator Light)	• Illuminates when the main switch is on.
Combination Meter (Buzzer)	• If the ECM or distance control ECU detects an automatic cancel signal while the vehicle is operating under cruise control, this buzzer sounds only once to inform the driver.
Combination Meter (LCD)	• While the system is in the vehicle-to-vehicle distance control mode, the combination meter receives signals from distance control ECU, in order to display the system conditions.
Steering Angle Sensor	• Detects the angle and direction of steering and transmits its signal to skid control ECU and distance control ECU.
Vehicle Speed Sensor (4)	• Detects the rotation speed of four wheels and transmits its signal to skid control ECU.
Yaw Rate & Deceleration Sensor	• Detects the yaw rate of the vehicle and transmits its signal to skid control ECU and distance control ECU.
Rain Sensor	• This sensor detects raindrops, and when the wiper operates at LO or HI, it requests the ECM to provide a cruise control cancel signal.
Brake Actuator	• Actuates the brakes in accordance with the signals from skid control ECU.
Brake Actuator (Skid Control ECU)	• Receives four vehicle speed sensor signals and outputs a vehicle speed signal to the combination meter. • While the system is in the vehicle-to-vehicle distance control mode, skid control ECU actuates the brake actuator in accordance with the brake request signal received from distance control ECU. • Upon receiving a signal from distance control ECU, skid control ECU sounds a VSC warning buzzer.
VSC Warning Buzzer	• This buzzer sounds upon receiving a signal from skid control ECU.
ECM	• Controls the cruise control system in accordance with the signals from the switches, sensors, skid control ECU and distance control ECU. • If the ECM detects a malfunction in the cruise control system, it will output DTCs (Diagnostic Trouble Codes).
Throttle Control Motor	• Upon receiving a signal from the ECM, the throttle control motor actuates the throttle valve.
Distance Control ECU	• While the system is in the vehicle-to-vehicle distance control mode, distance control ECU detects the follow up vehicle based on a signal from the laser sensor. Then, distance control ECU calculates the acceleration or deceleration rate in order to attain the target vehicle-to-vehicle distance, and outputs a request signal to the ECM and skid control ECU.

CC

3. LIMIT CONTROL

(a) Low speed limit

The lowest possible limit of the speed setting range is set at approximately 45 km/h (28 mph). The cruise control system cannot be set when the driving vehicle speed is below the low speed limit. Cruise control operation will be automatically canceled when the vehicle speed goes below the low speed limit (45 km/h (28 mph)) while the cruise control is in operation.

(b) High speed limit (Constant speed control mode)

The highest possible limit of the speed setting range is set at approximately 200 km/h (125 mph). The cruise control system cannot be set when the driving vehicle speed is over the high speed limit. Speed up using +/REC with the cruise control main switch assembly also cannot be set beyond the high speed limit.

(c) Upper speed limit (Vehicle-to-vehicle distance control mode)
The set vehicle speed can be increased up to approximately 85 mph in USA and 135 km/h in Canada.

4. CRUISE CONTROL OPERATION

The cruise control main switch operates eight functions: SET, COAST, TAP-DOWN, RESUME, ACCEL, TAP-UP, CANCEL, and MODE. The SET, TAP-DOWN and COAST functions, and the RESUME, TAP-UP and ACCEL functions are operated with the same switch. The cruise control main switch assembly is an automatic return type switch which turns on only while operating it in each arrow direction and turns off after releasing it. The dynamic laser cruise control system has two cruise control modes: the constant speed control mode and vehicle-to-vehicle distance control mode.

- The vehicle-to-vehicle distance control mode is always selected when starting up the dynamic laser cruise control system.
- Operation of the constant speed control mode is the same as that for the conventional type cruise control system.

(a) MODE CONTROL
Pushing the switch to MODE for more than 1 second while driving with the cruise control main switch ON-OFF button on (RADAR READY is on) switches the mode to the constant speed control mode.

(b) SET CONTROL (Constant speed control mode)
Vehicle speed is stored and constant speed control is maintained when pushing the switch to -/SET while driving with the vehicle speed within the set speed range (between the low and high speed limits) after pushing the cruise control main switch ON-OFF button on, and entering the constant speed control mode.

(c) SET CONTROL (Vehicle-to-vehicle distance control mode)
Vehicle speed is stored and vehicle-to-vehicle control is maintained when pushing the switch to -/SET while driving with the cruise control main switch ON-OFF button on, and vehicle speed is within the set speed range (between the low and high speed limits).

(d) COAST CONTROL (Constant speed control mode)
The ECM tells the cruise control to close the throttle opening angle zero degrees and decelerates the vehicle (the throttle valve is not fully closed due to the idle speed control, etc.) when -/SET on the cruise control main switch is pressed and held while the constant speed control mode is in operation. Vehicle speed, when the cruise control main switch is released from -/SET, is stored and constant speed control is maintained.

(e) COAST CONTROL (Vehicle-to-vehicle distance control mode)
When -/SET on the cruise control main switch is pressed and held while the vehicle-to-vehicle distance control mode is in operation, the stored vehicle speed decreases by approximately 5 km/h (CANADA) or 5 mph (USA) per second.

(f) TAP-DOWN CONTROL (Constant speed control mode)
When tapping down on the cruise control main switch to -/SET (for approximately 0.6 second) while the constant speed control mode is in operation, the stored vehicle speed decreases each time by approximately 1.6 km/h (1 mph). However, in case the difference between the driving and the stored vehicle speeds is more than 5 km/h (3 mph), the vehicle speed will be stored and constant speed control will be maintained when the cruise control main switch is released from -/SET.

(g) TAP-DOWN CONTROL (Vehicle-to-vehicle distance control mode)
When tapping down on the cruise control main switch to -/SET (for approximately 0.6 second) while the vehicle-to-vehicle distance control mode is in operation, the stored vehicle speed decreases each time by approximately 5 km/h (CANADA) or 5 mph (USA).

(h) ACCELERATION CONTROL (Constant speed control mode)
The throttle valve motor of the throttle position sensor and motor is instructed by the ECM to open the valve when +/REC on the cruise control main switch is pressed and held while the constant speed control mode is in operation. Vehicle speed is stored and constant speed control is maintained when the cruise control main switch is released from +/RES.

(i) ACCELERATION CONTROL (Vehicle-to-vehicle distance control mode)
When +/REC on the cruise control main switch is pressed and held while the vehicle-to-vehicle distance control mode is in operation, the stored vehicle speed increases by approximately 5 km/h (CANADA) or 5 mph (USA) per second.
Pushing the cruise control main switch to +/REC while following the vehicle in front with the vehicle-to- vehicle distance control mode does not increase the actual vehicle speed, but changes only the set vehicle speed.

(j) TAP-UP CONTROL (Constant speed control mode)
When tapping up on the cruise control main switch to +/REC (for approximately 0.6 second) while the constant speed control mode is in operation, the stored vehicle speed increases each time by approximately 1.6 km/h (1 mph). However, when the difference between the driving and the stored vehicle speeds is more than 5 km/h (3 mph), the stored vehicle speed will not be changed.

(k) TAP-UP CONTROL (Vehicle-to-vehicle distance control mode)
When tapping up on the cruise control main switch to +/REC (for approximately 0.6 second) while the vehicle-to-vehicle distance control mode is in operation, the stored vehicle speed increases each time by approximately 5 km/h (CANADA) or 5 mph (USA).

(l) MANUAL CANCEL CONTROL
Performing any of the following cancels the cruise control system while it is in operation (the stored vehicle speed in the hybrid vehicle control ECU is maintained).
- Depressing the brake pedal
- Moving the shift lever to any position except D (5th and 4th gears)
- Pushing the cruise control main switch to CANCEL
- Pushing the cruise control main switch ON-OFF button off (The stored vehicle speed in the ECM is not maintained.)

(m) RESUME CONTROL
If the cruise control operation was cancelled with the stop light switch or the CANCEL switch, and if driving speed is within the limit range, pushing the cruise control main switch to +/REC restores vehicle speed memorized at the time of cancellation, and maintains constant speed control. In constant speed mode, once vehicle speed goes below the low speed limit, RESUME operation is not possible even if accelerating up to the low speed limit, or more, again.

5. **LASER BEAM AXIS ADJUSTMENT**
The dynamic laser cruise control system has an automatic adjustment function of the optical axis. Perform the adjustment of the laser sensor optical axis with the intelligent tester (See page CC-121 for the optical axis adjustment).

6. **BRAKE CONTROL**
The distance control ECU (cruise control ECU) determines the distance between a vehicle in front and your own, relative speed, target decreasing speed and deceleration rate to transmit a brake demand signal to the skid control ECU via the ECM.

7. **DOWNSHIFT CONTROL**
While the cruise control system is in operation, the gear may downshift from overdrive (5th) to 4th on an uphill road. After the gear is shifted down to 4th, if the system determines that the uphill inclination has become smaller based on throttle opening angle information, the gear automatically returns to overdrive (5th).

8. **AUTO CANCEL (FAIL-SAFE)**
This system has an automatic cancellation function (fail-safe) (for details, See page CC-59).

HOW TO PROCEED WITH TROUBLESHOOTING

HINT:

- Use these procedures to troubleshoot the dynamic radar cruise control system.
- The intelligent tester should be used at steps 3, 4, 5, and 9.

CC

1	VEHICLE BROUGHT TO WORKSHOP

NEXT

2	INSPECT BATTERY VOLTAGE

Standard:

11 to 14 V

If the voltage is below 11 V, replace or recharge the battery before proceeding.

NEXT

3	CHECK COMMUNICATION FUNCTION OF MULTIPLEX COMMUNICATION SYSTEM (BEAN)

(a) Use the intelligent tester to check if the Multiplex Communication System (MPX) is functioning normally.
Result

Result	Proceed to
MPX DTC is not output	A
MPX DTC is output	B

B → **Go to MULTIPLEX COMMUNICATION SYSTEM**

A

4	CHECK COMMUNICATION FUNCTION OF CONTROLLER AREA NETWORK (CAN)

(a) Use the intelligent tester to check for normal function of CAN communication system.
(1) Perform bus check (communication malfunction DTC).
(2) Perform bus check (communication bus check).
Result

Result	Proceed to
DTC is not output	A
DTC is output	B

B → **Go to CAN COMMUNICATION SYSTEM**

A

5	CHECK FOR DTC

Refer to the DTC check/clear (See page CC-58).
(a) Check for DTC and note any codes that are output.
(b) Delete the DTC.
(c) Recheck for DTC. Try to prompt the DTC by simulating the original activity that the DTC suggests.

Result

Result	Proceed to
DTC does not reoccur	A
DTC reoccur	B

B → Go to step 8

A

6	PROBLEM SYMPTOMS TABLE

Refer to the problem symptoms table (See page CC-52).

Result

Result	Proceed to
Fault is not listed in problem symptoms table	A
Fault is listed in problem symptoms table	B

B → Go to step 8

A

7	OVERALL ANALYSIS AND TROUBLESHOOTING

(a) Terminal of ECU (See page CC-54).
(b) Data List/Active Test (See page CC-60).

NEXT

8	REPAIR OR REPLACE

NEXT

9	CONFIRMATION TEST

NEXT

END

ROAD TEST

1. PROBLEM SYMPTOM CONFIRMATION

HINT:

The dynamic radar cruise control system has two cruise control modes: the constant speed control mode and vehicle-to-vehicle distance control mode.

- The vehicle-to-vehicle distance control mode is always selected when starting up the dynamic radar cruise control system.
- Operation of the constant speed control mode is the same as that for a conventional cruise control system.

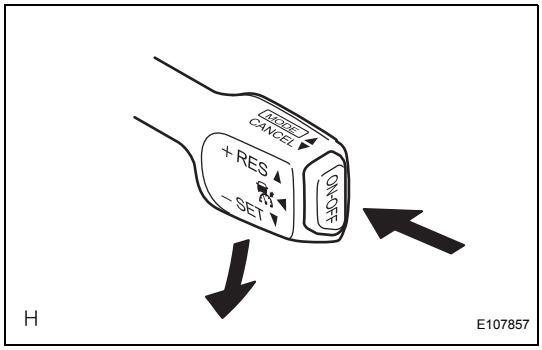

(a) Inspect the SET function.
  (1) Turn the main switch ON.
  (2) Drive at the required speed (45 km/h (28 mph) or higher).
  (3) Push the cruise control main switch to -/SET.
  (4) After releasing the switch, check that the vehicle cruises at the set speed.

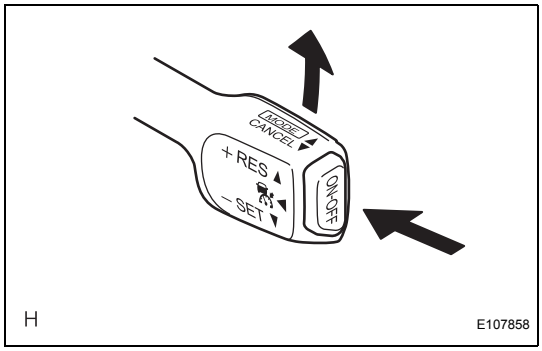

(b) Inspect the ACC (ACCEL) function.
  (1) Turn the main switch ON.
  (2) Drive at the required speed (45 km/h (28 mph) or higher).
  (3) Push the cruise control main switch to -/SET.
  (4) Check that vehicle speed increases while the cruise control main switch is pushed to +/RES, and that the vehicle cruises at the newly set speed when the switch is released.
  (5) Momentarily push the cruise control main switch +/RES and then immediately release it. Check that vehicle speed increases* (tap-up control).
  HINT:
  *: Constant speed control mode: increases by 1.6 km/h (1.0 mph); vehicle-to-vehicle distance control mode: increases by 5 km/h (3 mph)

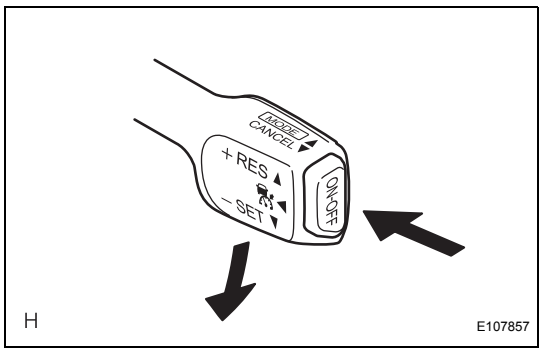

(c) Inspect the COAST function.
  (1) Turn the main switch ON.
  (2) Drive at the required speed (45 km/h (28 mph) or higher).
  (3) Push the cruise control main switch to -/SET.
  (4) Check that vehicle speed decreases while the cruise control main switch is pushed to -/SET, and the vehicle cruises at the newly set speed when the switch is released.

(5) Momentarily push the cruise control main switch to -/SET, and then immediately release it. Check that vehicle speed decreases* (tap-down control).
HINT:
*: Constant speed control mode: decreases by 1.6 km/h (1.0 mph); vehicle-to-vehicle distance control mode: decreases by 5 km/h (3 mph).

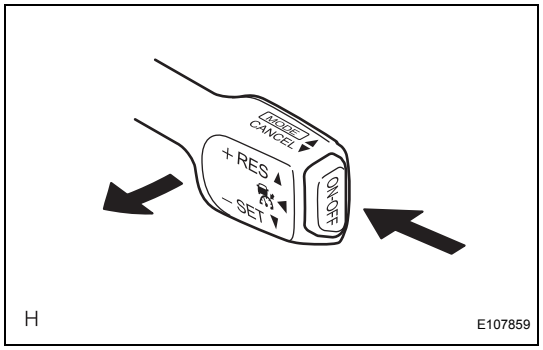

(d) Inspect the CANCEL function.
(1) Turn the main switch ON.
(2) Drive at the required speed (45 km/h (28 mph) or higher).
(3) Push the cruise control main switch to -/SET.
(4) When performing one of the following, check that the cruise control system is cancelled and that the normal driving mode is reset.
- Depressing the brake pedal
- Moving the shift lever to any position except D (5th and 4th gears)
- Turning the main switch OFF
- Pulling the cruise control main switch to CANCEL

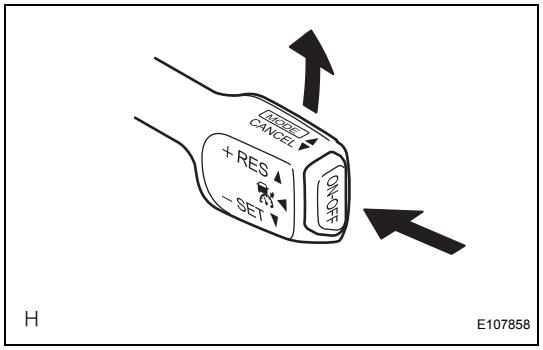

(e) Inspect the RES (RESUME) function.
(1) Turn the main switch ON.
(2) Drive at the required speed (45 km/h (28 mph) or higher).
(3) Push the cruise control main switch to -/SET.
(4) Cancel the cruise control system according to any of the above operations (other than turning the main switch OFF).
(5) After pushing the cruise control main switch to +/RES at a driving speed of more than 45 km/h (28 mph), check that the vehicle drives at the set speed.
HINT:
The stored vehicle speed is retained even if vehicle speed goes below 45 km/h (28 mph) once. The previously stored vehicle speed can be resumed by pushing the cruise control main switch to +/RES when vehicle speed returned to approximately 45 km/h (28 mph) or more.

OPERATION CHECK

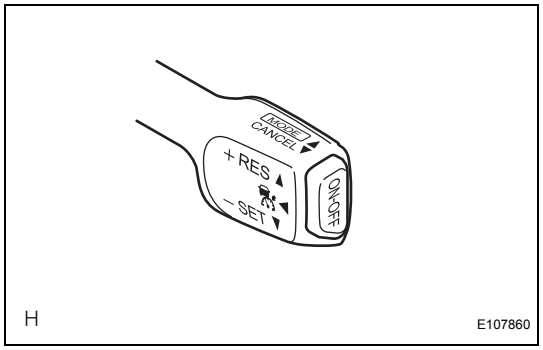

1. INPUT SIGNAL CHECK
(a) Connect the intelligent tester to the DLC3.
(b) Check the cruise control main switch using the DATA LIST function in the intelligent tester (ON-OFF, CANCEL, -/SET, +/RES, and MODE).

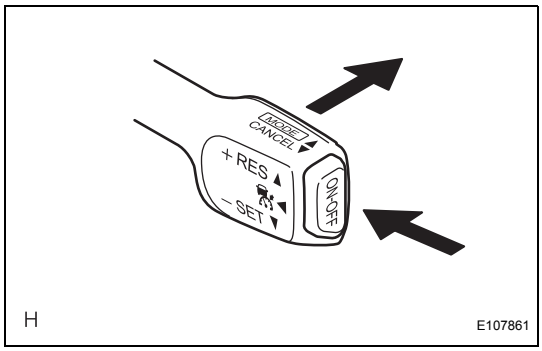

2. INSPECT MODE SWITCH

(a) Turn the ignition switch on (IG).
HINT:
Dynamic laser cruise is default mode.

CC

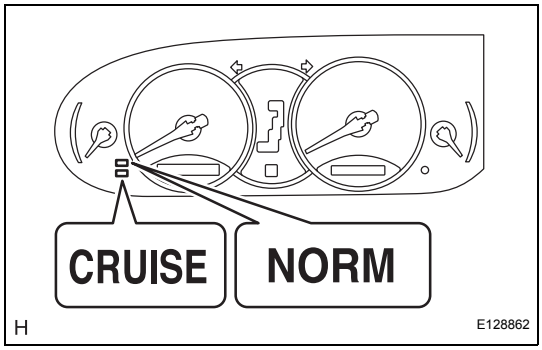

(b) After pushing the ON-OFF button on, push the cruise control main switch to MODE for at least 1 second without any other control. Make sure that "NORMAL." is indicated and no indication is shown in the display.
NOTICE:
Do not push any other switches before pushing the main switch to MODE. If another switch is pushed, turn the main switch OFF and repeat the procedure above.
HINT:
If the system cannot switch to the constant speed control mode, push the ON-OFF button off once, and perform the same procedures as shown above. If a malfunction is still detected in the system, and then start the engine and perform the above procedure.

3. INSPECT STEERING PAD SWITCH ASSEMBLY

(a) Turn the switch on.
(b) Push on the ON-OFF button of the cruise control main switch.
(c) Push on the distance control switch of the steering pad switch.

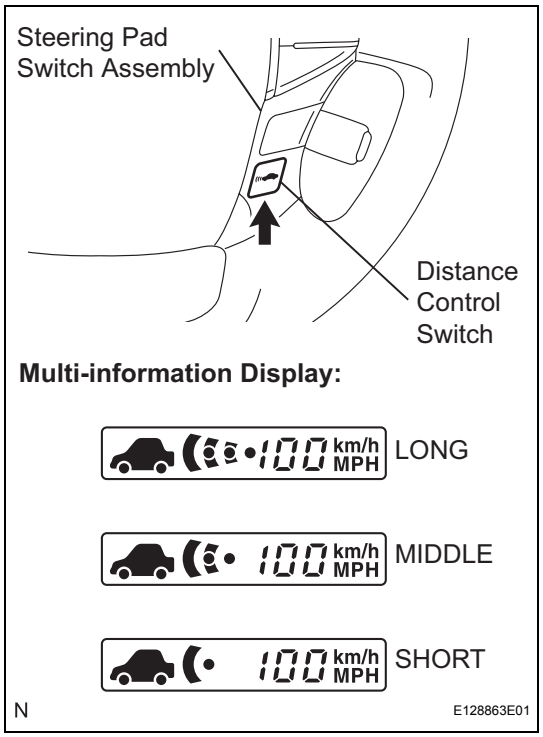

(d) Check the the indication multi-information display of the combination meter, changes from "LONG", "MIDDLE" to "SHORT" in order.
HINT:
The indication is immediately set to "LONG" each time the engine is started.

CC

PROBLEM SYMPTOMS TABLE

If a normal system code is displayed during the DTC check but the problem still occurs, check the suspected areas for each problem symptom in the order given in the table below and proceed to the relevant troubleshooting page.
HINT:
Inspect the "Fuse" and "Relay" before confirming the suspected areas as shown in the chart below. Inspect each suspected area for the corresponding symptom in numerical order.

DYNAMIC LASER CRUISE CONTROL SYSTEM

Symptom	Suspected area	See page
Main switch cannot be turned ON. (Cruise indicator light in combination meter does not come on.)	1. Cruise control switch circuit	CC-91
	2. CRUISE main indicator light circuit	CC-108
	3. ECM	CC-54
Vehicle speed setting cannot be done. (Although indicator light in combination meter comes on when the main switch is turned ON, it goes off when vehicle speed is set.)	1. Cruise control switch circuit	CC-91
	2. ECM	CC-54
Setting cannot be done. (Indicator light in combination meter comes on when the main switch is turned ON and it remains ON while setting.)	1. Cruise control switch circuit	CC-91
	2. Stop light switch circuit	CC-66
	3. Park/Neutral position switch circuit (DTC P0705)	AX-36
	4. Transmission control switch circuit	AX-115
	5. Combination meter system	ME-13
	6. ECM	CC-54
While the vehicle is driven with cruise control, the set control is cancelled. (Indicator light and CRUISE remain ON.)	1. Cruise control switch circuit	CC-91
	2. Vehicle speed sensor circuit	CC-65
	3. Stop light switch circuit	CC-66
	4. Cruise main indicator light circuit	CC-108
	5. Park/Neutral position switch circuit (DTC P0705)	AX-36
	6. ECM	CC-54
Hunting (Speed is not constant.)	1. Vehicle speed sensor circuit	CC-65
	2. Malfunction in speed meter circuit	ME-13
	3. Laser sensor power source circuit	CC-103
	4. Distance control ECU power source circuit	CC-96
	5. Distance control ECU	CC-54
	6. ECM	CC-54
Setting cannot be cancelled. (When Coast, Acceleration, Resume, Set speed change and Control switch are operated.)	1. Cruise control switch circuit	CC-91
	2. ECM	CC-54
Erroneous detection or lost sight of the vehicle ahead.	1. Clean laser sensor with soft cloth, etc.	CC-121
	2. Improper aiming of sensor beam axis	CC-121
Alarm buzzer does not sound.	1. Buzzer circuit	BC-229
	2. VSC system	BC-100
	3. Laser sensor power source circuit	CC-103
	4. Distance control ECU power source circuit	CC-96
	5. Distance control ECU	CC-54
	6. ECM	CC-54
Set distance cannot be changed.	1. Combination meter system	ME-13
	2. Distance control switch circuit	CC-98
	3. Cruise control switch circuit	CC-91
	4. ECM	CC-54

Symptom	Suspected area	See page
No display	1. Combination meter system	ME-13
	2. ECM	CC-54
No brake control (when decelerating)	1. VSC system	BC-100
	2. Distance control ECU power source circuit	CC-96
	3. Distance control ECU	CC-54
	4. ECM	CC-54
Constant speed mode cannot be turned on.	1. Cruise control switch circuit	CC-91
	2. Combination meter system	ME-13
	3. ECM	CC-54
Vehicle speed setting cannot be cancelled with wiper LO/HI. (Including automatic wiper)	1. Rain sensor circuit	MP-63
	2. Wiper switch circuit	CC-107
	3. Distance control ECU	CC-54
	4. ECM	CC-54
Unable to adjust (complete) beam axis of millimeter wave radar sensor.	1. Check for DTC P1570	CC-74
	2. Check position, distance and angle of reflector	CC-121
	3. Check installation of laser sensor	CC-121
	4. Laser sensor	CC-103
	5. ECM	CC-54

TERMINALS OF ECU

1. CHECK DISTANCE CONTROL ECU

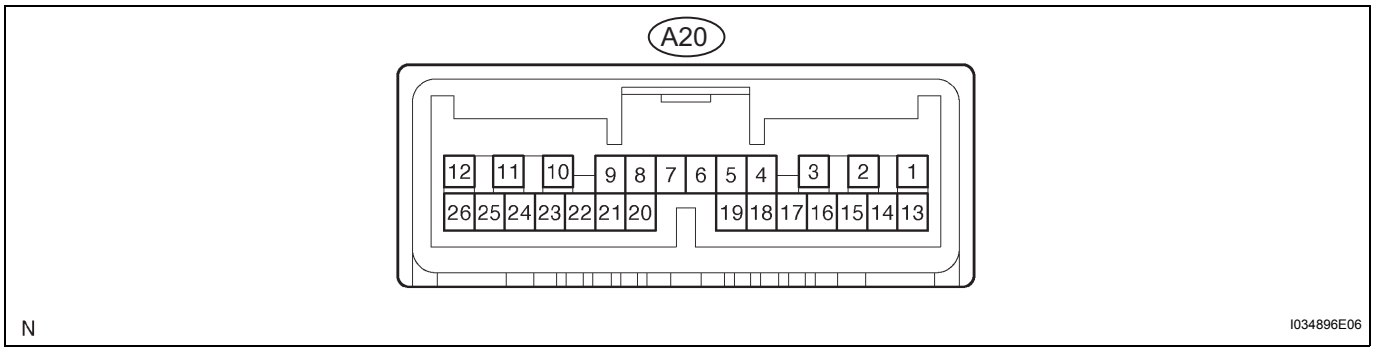

CC

Symbols (Terminal No.)	Wiring Color	Terminal Description	Condition	Specified Condition
B - GND (A20-1 - A20-12)	BR - R	Battery	Always	10 to 14 V
CANH (A20 - 8)	L	CAN communication signal	CAN communication circuit	-
CANL (A20 - 9)	W	CAN communication signal	CAN communication circuit	-
SGND - Body ground (A20-10 - Body ground)	R - Body ground	Ground	Always	Below 1 V
GND - Body ground (A20-12 - Body ground)	R - Body ground	Ground	Always	Below 1 V
IGB - GND (A20-13 - A20-12)	V - R	Ignition switch ON signal	Ignition switch OFF → ON (IG)	Below 1 V → 10 to 14 V
LRDD - GND (A20-22 - A20-12)	B - R	Laser sensor input signal	Ignition switch ON (IG)	Pulse generation (see waveform 1)
LRRD - GND (A20-23 - A20-12)	G - R	Laser sensor output signal	Ignition switch ON (IG)	Pulse generation (see waveform 2)

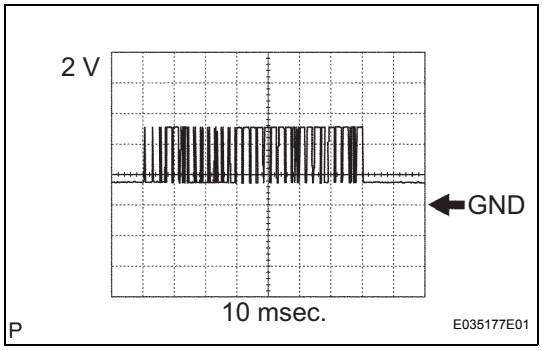

(a) Reference: waveform 1
HINT:
- Terminal: LRDD - GND
- Gauge set: 2 V/DIV, 10 msec./DIV
- Condition: Ignition switch ON

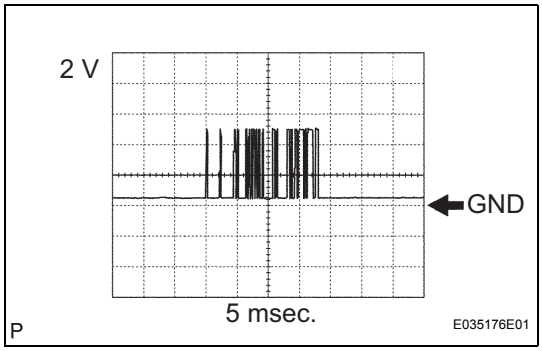

(b) Reference: waveform 2
HINT:
- Terminal: LRRD - GND
- Gauge set: 2 V/DIV, 5 msec./DIV
- Condition: Ignition switch ON

2. CHECK ECM

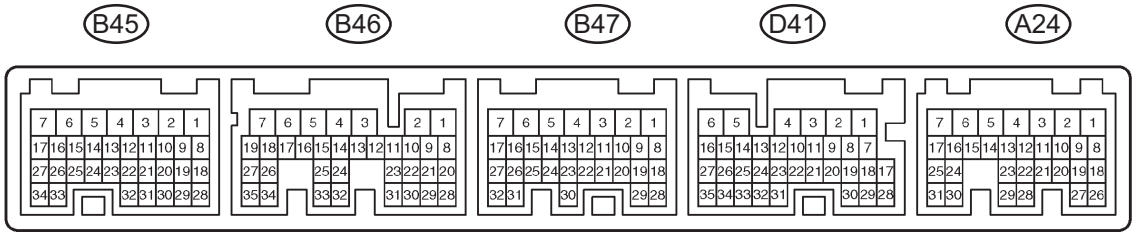

N

G035759E02

Symbols (Terminal No.)	Wiring Color	Terminal Description	Condition	Specified Condition
STP - E1 (A24-15 - B47-1)	W - BR	Stop light signal	Brake pedal released (Stop light switch OFF) → Brake pedal depressed (Stop light switch ON)	Below 1 V → 10 to 14 V
CCS - E1 (D41-2 - B47-1)	B - BR	Cruise control main switch signal	Ignition switch ON (IG) CANCEL switch ON SET / COAST switch ON RES / ACC switch ON Main switch ON	10 to 16 V 6.6 to 10.1 V 4.5 to 7.1 V 2.3 to 4.0 V Below 1 V
ST1- - E1 (A24-16 - B47-1)	GR - BR	Stop light signal	Ignition switch ON (IG) Brake pedal depressed (Stop light switch ON) → Brake pedal released (Stop light switch OFF)	Below 1 V → 10 to 14 V
CCHG - E1 (D41-4 - B47-1)	Y - BR	Distance control switch signal	Ignition switch ON (IG) Cruise control main switch ON MODE switch ON → MODE switch OFF	Below 1 V → 10 to 14 V
LGND - Body ground (A24-31 - Body ground)	BR - Body ground	Ground	Always	Below 1 V
E1 - Body ground (B47-1 - Body ground)	BR - Body ground	Ground	Always	Below 1 V

If the value is not within the standard range, some defects on the vehicle is suspected.

3. CHECK LASER SENSOR

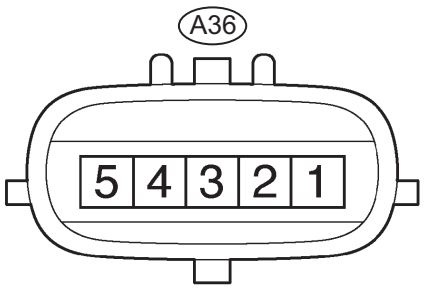

N

I039263E05

CC

Symbols (Terminals No.)	Wiring Color	Terminal Description	Condition	Specified Condition
LGND - Body ground (A36-1 - Body ground)	BR - Body ground	Distance signal	Always	Below 1 Ω
SGND - Body ground (A36-2 - Body ground)	R - Body ground	Ground	Always	Below 1 Ω
LRDD - SGND (A36-3 - A36-2)	B - R	Laser radar sensor output signal	Ignition switch: ON (IG)	Pulse generation (see waveform 1)
LRRD - SGND (L1-4 - L1-2)	G - R	Laser radar sensor input signal	Ignition switch: ON (IG)	Pulse generation (see waveform 2)
IGB - SGND (L1-5 - L1-2)	V - R	Ignition switch signal	Ignition switch: ON (IG)	10 to 14 V

CC

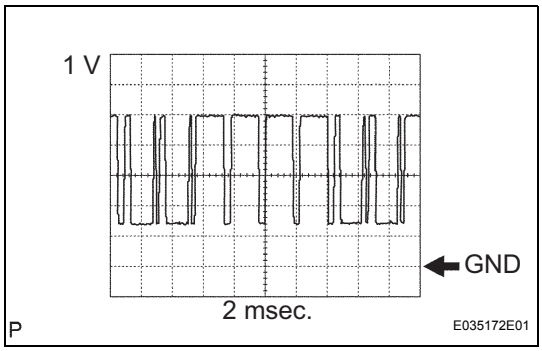

(a) Reference: waveform 1
HINT:
- Terminal: LRDD - SGND
- Gauge set: 1 V/DIV, 2 msec./DIV
- Condition: Ignition switch on (IG)

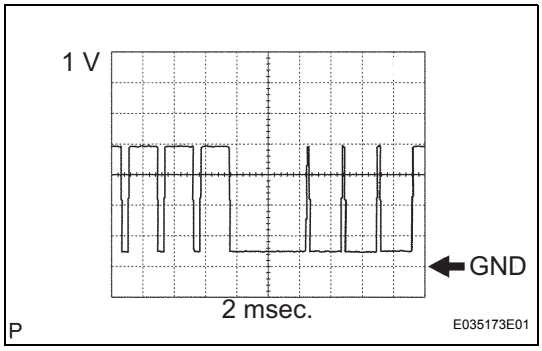

(b) Reference: waveform 2
HINT:
- Terminal: LRRD - SGND
- Gauge set: 1 V/DIV, 2 msec./DIV
- Condition: Ignition switch on (IG)

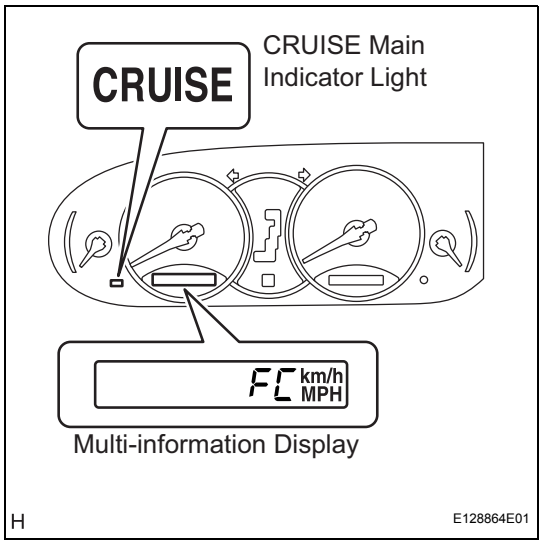

DIAGNOSIS SYSTEM

1. LASER BEAM AXIS ADJUSTMENT

(a) Use the intelligent tester to adjust the optical axis (See page CC-121 for the optical axis adjusting operation).
HINT:
While adjusting the optical axis of the laser radar sensor, the CRUISE main indicator light illuminates and FC is displayed on the multi-information display.

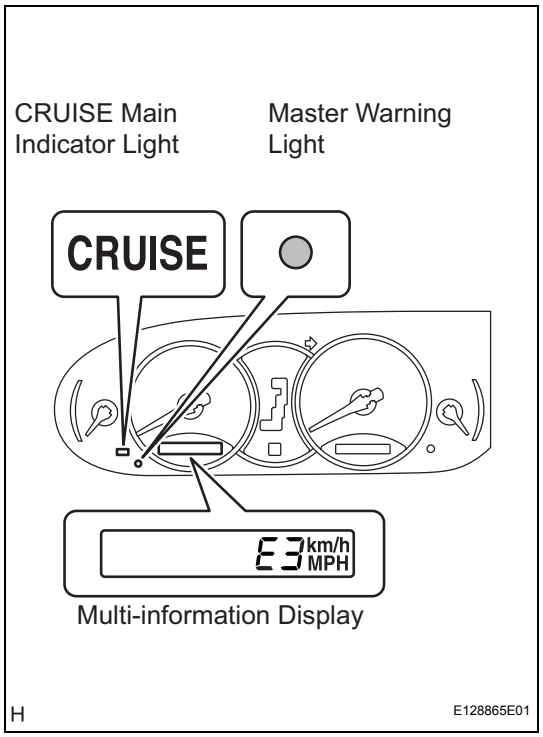

2. DIAGNOSIS FUNCTION

(a) The diagnosis function makes the master warning light and the multi-information display come on, and the CRUISE main indicator light blinks. When a malfunction occurs in the dynamic laser cruise control system, the DTCs are stored in the ECM.

NOTICE:

- **The master warning light goes off if the system returns to normal condition.**

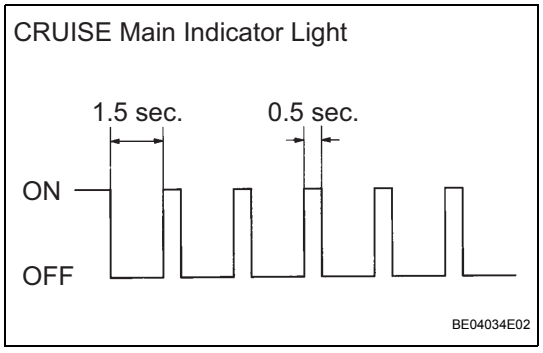

- **Since the stored data in the ECM is erased by disconnecting the EFI and ETCS fuses or the battery terminal, do not disconnect them until the inspection has been completed.**

3. DESCRIPTION

(a) The ECM controls the dynamic radar cruise control system of the vehicle. The data and DTCs relating to the dynamic radar cruise control system can be read from the DLC3 of the vehicle. If either DTC or CRUISE OK is not displayed in the multi-information display on the combination meter when checking for DTCs, there may be a problem with the combination meter or the CAN communication and multiplex communication system. Use the intelligent tester to check and solve the problem.

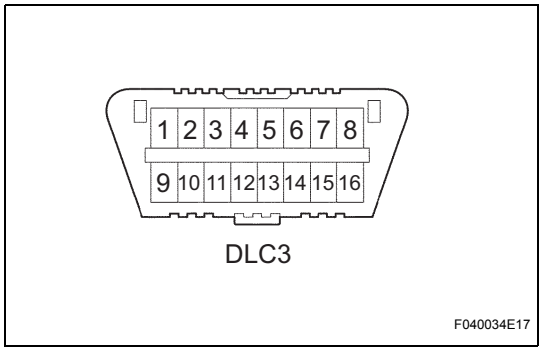

4. CHECK DLC3

(a) The vehicle's ECM uses ISO 9141-2 for communication. The terminal arrangement of the DLC3 complies with SAE J1962 and matches the ISO 9141-2 format.

Symbols (Terminal No.)	Terminal Description	Condition	Specified Condition
SIL(7) - SG(5)	Bus "+" line	During transmission	Pulse generation
CG(4) - Body ground	Chassis ground	Always	Below 1 Ω
SG(5) - Body ground	Signal ground	Always	Below 1 Ω
BAT(16) - Body ground	Battery positive	Always	11 to 14 V
CANH(6) - CANL(14)	HIGH-level CAN bus line	IG switch OFF	54 to 67 Ω

Symbols (Terminal No.)	Terminal Description	Condition	Specified Condition
CANH(6) - Battery positive	HIGH-level CAN bus line	IG switch OFF	1 MΩ or higher
CANH(6) - CG(4)	HIGH-level CAN bus line	IG switch OFF	3 kΩ or higher
CANL(14) - Battery positive	LOW-level CAN bus line	IG switch OFF	1 MΩ or higher
CANL(14) - CG(4)	LOW-level CAN bus line	IG switch OFF	3 kΩ or higher

HINT:
If the display shows a communication error message when you have connected the intelligent tester of the DLC3, turned the ignition switch on (IG) and operated the tester, there is a problem on either the vehicle side or the tool side.

- If communication is normal when the tool is connected to another vehicle, inspect the DLC3 on the original vehicle.
- If communication is still impossible when the tool is connected to another vehicle, the problem is probably in the tool itself, so consult the Service Department listed in the tool' instruction manual.

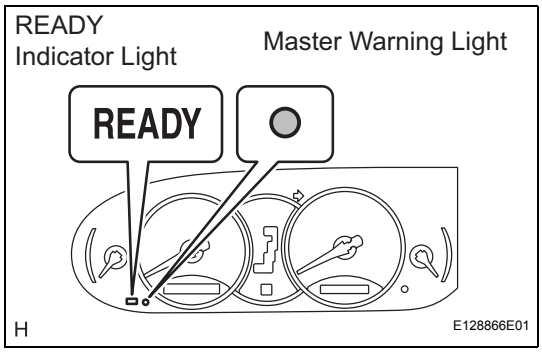

5. CHECK INDICATOR

(a) Turn the ignition switch on.
(b) Check that the CRUISE main indicator light and RADAR READY indicator come on when the main switch ON-OFF button is pushed on, and that the indicator light goes off when the ON-OFF button is pushed off.
HINT:
- If the indicator check result shows a problem, proceed to troubleshooting (See page ME-13) for the combination meter section.
- If a malfunction occurs in the vehicle speed sensors, the stop light switch, or other related parts during cruise control driving, the ECU actuates AUTO CANCEL of the cruise control and blinks the CRUISE main indicator light. During constant speed control, the master warning light blinks. During vehicle-to-vehicle distance control, the master warning light comes on. This indicator light informs the driver of the malfunction. At the same time, the malfunction is stored as a diagnostic trouble code.

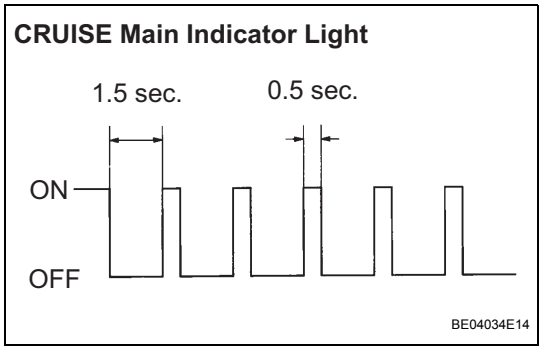

DTC CHECK / CLEAR

1. CHECK DTC

(a) Connect the intelligent tester to the DLC3.
(b) Turn the ignition switch on (IG).
(c) Read the DTCs by following the prompts on the tester screen.

2. CLEAR DTC

(a) Connect the intelligent tester to the DLC3.
(b) Turn the ignition switch on (IG).

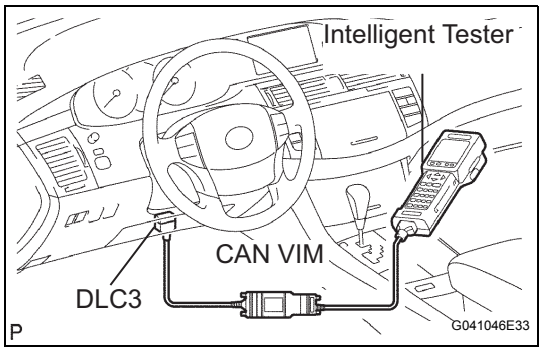

(c) Clear the DTCs following the prompts on the tester screen.
HINT:
Refer to the intelligent tester operator's manual for further details.

FAIL-SAFE CHART

1. AUTO CANCEL FUNCTION (FAIL-SAFE FUNCTION)

HINT:
If a system malfunction occurs, the applicable DTCs will appear on the multi-information display.

(a) The CRUISE main indicator light keeps blinking until the main switch is turned off, the master warning light comes on with a popping sound, and the display shows "E3". The cruise control operation is suspended until turning the main switch ON again. The auto cancel function deletes the stored vehicle speed and cancels the cruise control operation in the following conditions.
(1) When the vehicle speed signal malfunctions.
(2) When the electronic throttle parts malfunction.
(3) When the stop light switch has an open or short circuit.
(4) When the laser radar sensor malfunctions. (*1)
(5) When the light axis of the laser radar sensor is off position. (*1)
*1: Only in the vehicle-to-vehicle distance control mode.

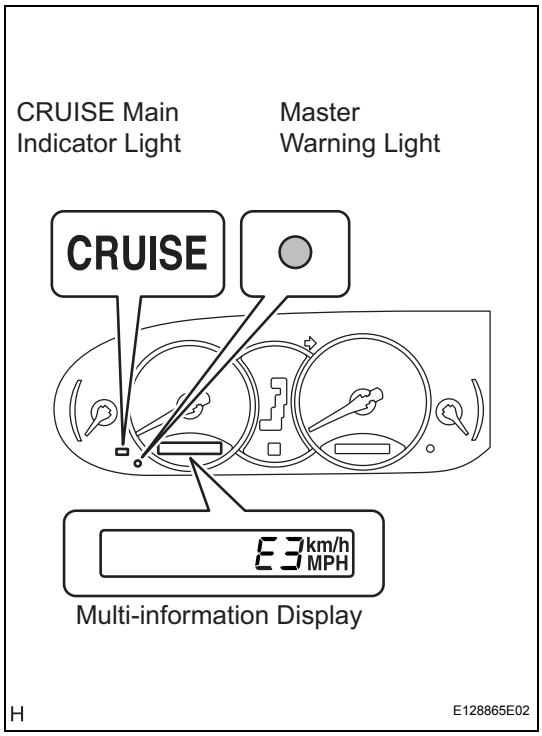

(b) The CRUISE main indicator light blinks, the master warning light comes on with a popping sound, and the display shows "C2". The cruise control operation is suspended until the canceling condition is resolved (in the vehicle- to-vehicle distance control mode only). The auto cancel function cancels the cruise control operation in the following conditions.
(1) When the wipers (Hi, Lo) operate (including the auto wiper).
(2) When the laser radar sensor receives strong light, such as sunlight, from the front side.
(3) When the vehicle-to-vehicle distance measurement is extremely unstable because of bad weather.

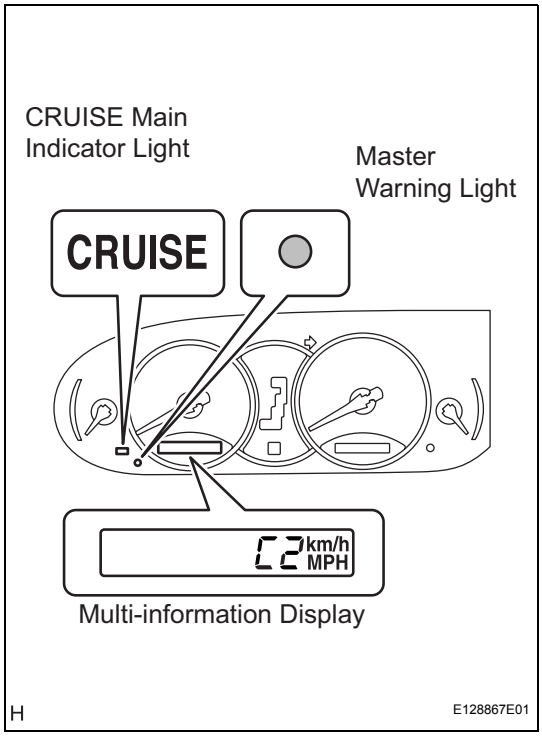

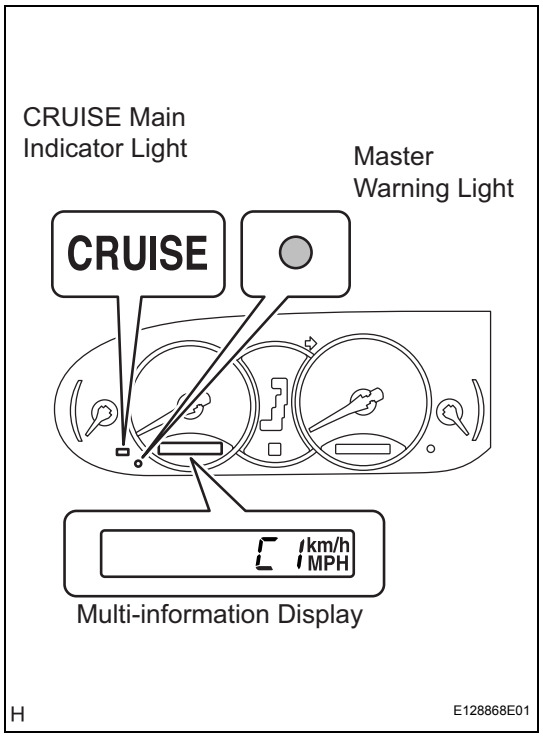

(c) The auto cancel function cancels the cruise control operation in the following condition. At this time, the CRUISE main indicator light blinks, the master warning light comes on with a popping sound and the display shows "C1". The cruise control operation is suspended until the canceling condition is resolved (in the vehicle-to-vehicle distance control mode only).

(1) When the laser radar sensor has dirt on it.

HINT:

While the dynamic laser cruise control is operated, the ECM outputs a malfunction code for 0.15 sec. or more when it detects dirt.

CC

DATA LIST / ACTIVE TEST

1. READ DATA LIST

HINT:

Using the intelligent tester's DATA LIST allows switch, sensor, actuator and other item values to be read without removing any parts. Reading the DATA LIST early in troubleshooting is one way to save time.

(a) Connect the intelligent tester to the DLC3.
(b) Turn the ignition switch on (IG).
(c) Read the DATA LIST according to the display on the tester.

CC

CC (ECM):

Item	Measurement Item / Display (Range)	Normal Condition	Diagnostic Note
ACCEL REQUEST	Accelerator request signal / min.: -2621.44 k/h/s, max.: 2621.36 k/h/s	No vehicle in front	-
VEHICLE DISTANCE	Laser radar sensor / min.: 0 m (0 ft), max.: 255 m (836.65 ft)	Distance to the vehicle in front	-
L/C OPTION FLAG	Laser cruise option flag / NO, YES	YES: Vehicle-to-vehicle distance mode	-
DISTANCE TIME	Car distance time setting condition /SHRT, MID, LONG, NO	The vehicle selected by distance control switch	-
O/D CUT RQST	O/D cut request / NOT REQ, REQUEST	NOT REQ: Idling	-
3RD SHIFT DOWN	Shift down request to 3rd gear / NOT REQ, REQUEST	NOT REQ: Idling	-
4TH SHIFT DOWN	Shift down request to 4th gear / NOT REQ, REQUEST	NOT REQ: Idling	-
ALARM RQST	Alarm request signal / NOT REQ, REQUEST	REQUEST: When beeping NOT REQ: When not beeping	-
THROTTLE CLOSE	All throttle close request / NOT REQ, REQUEST	ON : REQUEST OFF : NOT REQUEST	-
BRAKE CTRL RQST	Brake control request / NOT REQ, REQUEST	ON : REQUEST OFF : NOT REQUEST	-
TARG DECL SLOPE	Cruise target deceleration slope / 0.03, 0.06, 0.11, 0.16	0.03, 0.06, 0.11, 0.16	-
VEHICLE SPD	Vehicle speed sensor/ min.: 0 km/h (0 mph), max.: 255 km/h (158 mph)	Actual vehicle speed	-
MEMORY SPD	Cruise control memorized speed / min.: 0 km/h (0 mph), max.: 255 km/h (158 mph)	Memorized speed : Cruise control activated	-
RQST TORQUE	Cruise request torque/ min.: -1024 Nm, max.: 1016 Nm	-	-
CRUISE CONTROL	Cruise control system active condition / ON or OFF	ON: Cruise control activated OFF: Cruise control inactivated	-
MAIN SW (MAIN)	Main SW signal (Main CPU) / ON or OFF	ON : Main SW ON (Pushed on) OFF: Main SW OFF (Pushed off)	*3
CCS READY M	Cruise control system standby condition (Main CPU) / ON or OFF	ON ←→ OFF : Change ON/OFF each time Main SW is pushed.	*1
CCS INDICATOR M	Cruise indicator signal (Main CPU) / ON or OFF	ON : "CCS READY" ON OFF : "CCS READY" OFF	*2
CANCEL SW	CANCEL SW signal / ON or OFF	ON : SET/- SW ON OFF : SET/- SW OFF	-
SET/- SW	SET/- SW signal / ON or OFF	ON : SET/- SW ON OFF : SET/- SW OFF	-

Item	Measurement Item / Display (Range)	Normal Condition	Diagnostic Note
RES/+ SW	RES/+ SW signal / ON or OFF	ON : RES/+ SW ON OFF : RES/+ OFF	-
STP LIGHT SW M	Stop light SW signal (Main CPU) / ON or OFF	ON : Brake pedal depressed OFF : Brake pedal released	-
SHIFT D POS	PNP SW signal (D position) / ON or OFF	ON : Shift position D OFF : Any shift position except D	-
VSC FAIL SAFE	VSC fail-safe flag/ ON or OFF	-	-

HINT:
*3 is OK, but *1 is NG → ECM failure
*1 is OK, but *2 is NG → DTC output or ECM failure
*3 is OK, but CRUISE main indicator light does not come on → Indicator, wire harness, or ECM failure

CC

2. ACTIVE TEST

HINT:
Performing the ACTIVE TEST using the intelligent tester allows components such as the relay, VSV, and actuator to operate without parts removal. Performing the ACTIVE TEST as the first step of troubleshooting is one way to shorten labor time.
It is possible to display the DATA LIST during the ACTIVE TEST.

(a) Connect the intelligent tester to the DLC3.
(b) Turn the ignition switch on (IG).
(c) According to the display on the tester, perform the "ACTIVE TEST".
HINT:
The ignition switch must be turned on (IG) to proceed to the ACTIVE TEST using the intelligent tester.

COMBINATION METER:

Item	Vehicle Condition / Test Details	Diagnostic Note
CRUISE INDIC	"CRUISE" indicator is ON / OFF	-
L-CRUISE DISP	Graphic area is ON / OFF	-
L-CRS CHECK IND	"CHECK CRUISE SYSTEM" indicator is ON / OFF	-
L-CRS READY IND	"RADAR READY" indicator is ON / OFF	-

DIAGNOSTIC TROUBLE CODE CHART

HINT:
If a trouble code is displayed during the DTC check, check the circuit listed for that code. For details of each code, refer to the "See page" in the DTC chart.

DYNAMIC LASER CRUISE CONTROL SYSTEM

DTC No.	Detection Item	Trouble Area	See page
P0500	Vehicle Speed Sensor Malfunction	- Combination meter - Vehicle speed sensor - Vehicle speed sensor signal circuit - ECM	CC-65
P0571	Brake Switch "A" Circuit	- Stop light switch assembly - Stop light switch signal assembly circuit - ECM	CC-66
P0571	Stop Light Switch Circuit Malfunction	- BRK relay - BRK relay circuit - ABS & traction actuator assembly (Skid control ECU) - Communication circuit - Cruise control ECU (Distance control ECU) - ECM	CC-69
P0607	Control Module Performance	- ECM (This DTC indicates a malfunction in the ECM. When this DTC is output, it is necessary to replace the ECM.)	CC-73
P1570	Radar Sensor Malfunction	- Laser sensor	CC-74
P1572	Improper Aiming of Radar Sensor Beam Axis	- Laser sensor	CC-75
P1575	Warning Buzzer Malfunction	- Skid control buzzer assembly - Skid control buzzer circuit - ABS & traction actuator assembly (Skid control ECU)	CC-76
P1578	Brake System Malfunction	- VSC system	CC-77
P1615	Communication Error from Distance Control ECU to ECM	- Communication circuit - Cruise control ECU (Distance control ECU) - ECM	CC-78
P1616	Communication Error from ECM to Distance Control ECU	- Communication circuit - Cruise control ECU (Distance control ECU) - ECM	CC-79
U0100	Lost Communication with ECM/ PCM "A"	- Communication circuit - Cruise control ECU (Distance control ECU) - ECM	CC-79
P0503	Vehicle Speed Sensor Circuit Malfunction	- Combination meter - Vehicle speed sensor - Vehicle speed sensor signal circuit - ECM	CC-65
P1617	Distance Control ECU Malfunction	- Cruise control ECU (Distance control ECU)	CC-80
P1630	Communication Error from VSC to ECM	- Communication circuit - ABS & traction actuator assembly (Skid control ECU) - ECM	CC-81

DTC No.	Detection Item	Trouble Area	See page
P1631	Communication Error from ECM to VSC	- Communication circuit - ABS & traction actuator assembly (Skid control ECU) - ECM	CC-82
U0100	Lost Communication with ECM/ PCM "A"	- Communication circuit - ABS & traction actuator assembly (Skid control ECU) - ECM	CC-82
U0122	Lost Communication with Vehicle Dynamics Control Module	- Communication circuit - ABS & traction actuator assembly (Skid control ECU) - ECM	CC-81
U0123	Communication Error of Yaw Rate Sensor	- Communication circuit - Yaw rate sensor - Cruise control ECU (Distance control ECU) - ECM	CC-83
U0126	Lost Communication with Steering Angle Sensor Module	- Communication circuit - Steering sensor - Cruise control ECU (Distance control ECU) - ECM	CC-84
U0235	Lost Communication with Cruise Control Front Distance Range Sensor	- Communication circuit - Laser sensor - Cruise control ECU (Distance control ECU)	CC-85
U1101	Lost Communication with Distance Control ECU	- Communication circuit - Cruise control ECU (Distance control ECU) - ECM	CC-78
U1102	Lost Communication with Radar Sensor	- Communication circuit - Laser sensor - Cruise control ECU (Distance control ECU)	CC-88

HINT:
*1: DTC 52 is output during DTC check using a SST check wire.
*2: DTC 76 is output during DTC check using a SST check wire.
*3: When DTC P1578 is output, check for DTCs on the skid control ECU in the diagnosis mode. Only when any code is output, inspect the trouble area based on the DTC.

DTC	P0500	Vehicle Speed Sensor Malfunction

DTC	P0503	Vehicle Speed Sensor Circuit Malfunction

DESCRIPTION

See page ES-262.

DTC No.	DTC Detection Condition	Trouble Area
P0500	This trouble code is output when the vehicle speed signal from the vehicle speed sensor is cut for 0.14 sec. or more while the cruise control is in operation.	• Combination meter • Vehicle speed sensor • Vehicle speed sensor signal circuit • ECM
P0503	Momentary interruption and noise are detected when a rapid change of vehicle speed occurs while the cruise control is in operation.	• Combination meter • Vehicle speed sensor • Vehicle speed sensor signal circuit • ECM

WIRING DIAGRAM

See page ES-262.

INSPECTION PROCEDURE

See page ES-262.

DTC	P0571	Brake Switch "A" Circuit

DESCRIPTION

When the brake pedal is depressed, the stop light switch assembly sends a signal to the ECM. When the ECM receives this signal, it cancels the cruise control.
The fail-safe function operates to enable normal driving even if there is a malfunction in the stop light signal circuit.
The cancel condition occurs when positive battery voltage is applied to terminal STP.
When the brake is applied, battery positive voltage is normally applied to terminal STP of the ECM through the STOP fuse and the stop light switch assembly, and the ECM turns the cruise control off.

DTC No.	DTC Detection Condition	Trouble Area
P0571	The malfunction code is output when the voltage of STP terminal and that of ST1- terminal on the ECM are less than 1 V for 0.5 sec. or more.	• Stop light switch assembly • Stop light switch assembly circuit • ECM

WIRING DIAGRAM

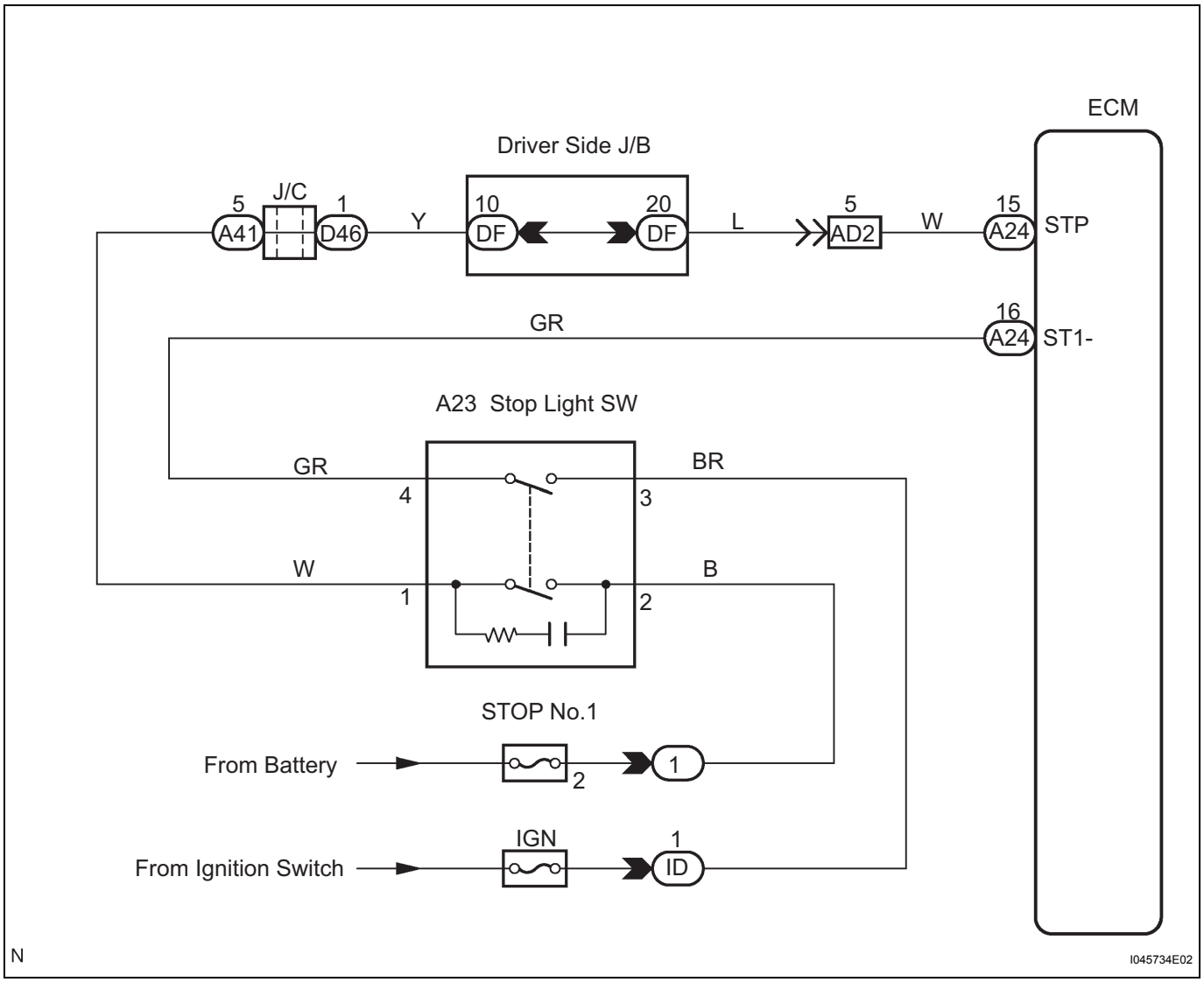

INSPECTION PROCEDURE

1	READ VALUE OF INTELLIGENT TESTER

(a) Connect the intelligent tester to the DLC3.
(b) Turn the ignition switch on, and turn the intelligent tester main switch on.
(c) Check the DATA LIST for proper functioning of the stop light switch.

CC (ECM):

CC

Item	Measurement Item / Display (Range)	Normal Condition	Diagnostic Note
STP LIGHT SW M	Stop light switch signal (Main CPU) / ON or OFF	ON: Brake pedal depressed OFF: Brake pedal released	-

OK:
When brake pedal operation is performed, the result will be same as above.

OK → **REPLACE ECM**

NG

2	INSPECT STOP LIGHT SWITCH

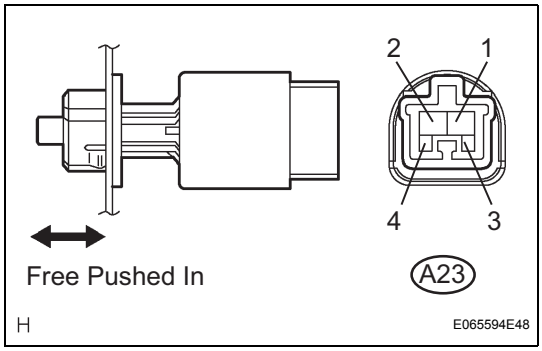

(a) Disconnect the stop light switch assembly connector.
(b) Measure the resistance according to the values in the table below.
Standard resistance

Switch Condition	Tester Connection	Specified Condition
Switch pin free	1 - 2	Below 1 Ω
Switch pin free	3 - 4	10 kΩ or higher
Switch pin pushed	1 - 2	10 kΩ or higher
Switch pin pushed	3 - 4	Below 1 Ω

NG → **REPLACE STOP LIGHT SWITCH**

OK

3	CHECK WIRE HARNESS (STOP LIGHT SWITCH - BATTERY)

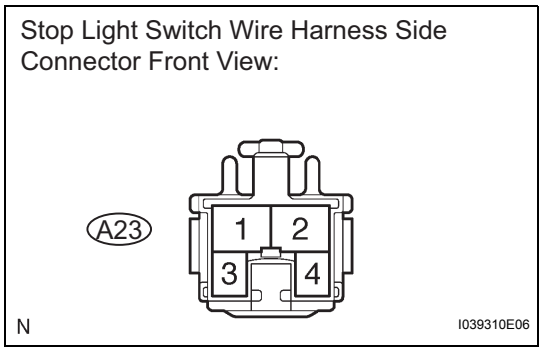

(a) Measure the voltage according to the value(s) in the table below.
Standard voltage

Tester Connection	Condition	Specified Condition
A23-2 - Body ground	Always	10 to 14 V
A23-3 - Body ground	Engine switch on (IG)	10 to 14 V

NG → **REPAIR OR REPLACE HARNESS OR CONNECTOR**

OK

4	CHECK HYBRID VEHICLE CONTROL ECU

ECM Connector Wire Harness View:

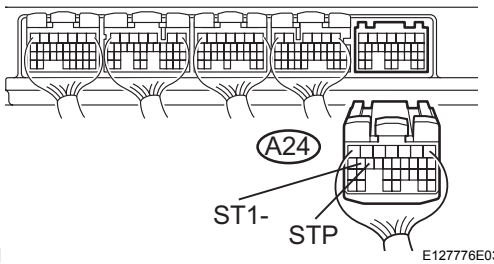

(a) Reconnect the stop light switch connector.
(b) Disconnect the A24 connector from the ECM.
(c) Turn the ignition switch on (IG).
(d) Measure the voltage according to the value(s) in the table below.

Standard voltage

Tester Connection	Brake Pedal Condition	Specified Condition
A24-15 (STP) - Body ground	Depressed	10 to 14 V
A24-15 (STP) - Body ground	Released	Below 1 V
A24-16 (ST1-) - Body ground	Depressed	Below 1 V
A24-16 (ST1-) - Body ground	Released	10 to 14 V

NG → REPAIR OR REPLACE HARNESS OR CONNECTOR (STOP LIGHT SWITCH - ECM)

OK

REPLACE ECM

CC

DTC	P0571	Stop Light Switch Circuit Malfunction

DESCRIPTION

The ECM receives the brake demand signal from the cruise control ECU (distance control ECU) and transmits it to the skid control ECU.
The skid control ECU receives a signal from the ECM and operates the brake actuator.
The skid control ECU operates the brake actuator and illuminations the stop light by operating the BRK relay at the same time.

DTC No.	DTC Detection Condition	Trouble Area
P0571	This trouble code is output when the ECM detects the BRK relay error signal from the ABS & traction actuator assembly (skid control ECU) for 0.2 sec. or more while the dynamic cruise control is in operation.	• BRK relay • BRK relay circuit • ABS & traction actuator assembly (Skid control ECU) • Distance control ECU • ECM

WIRING DIAGRAM

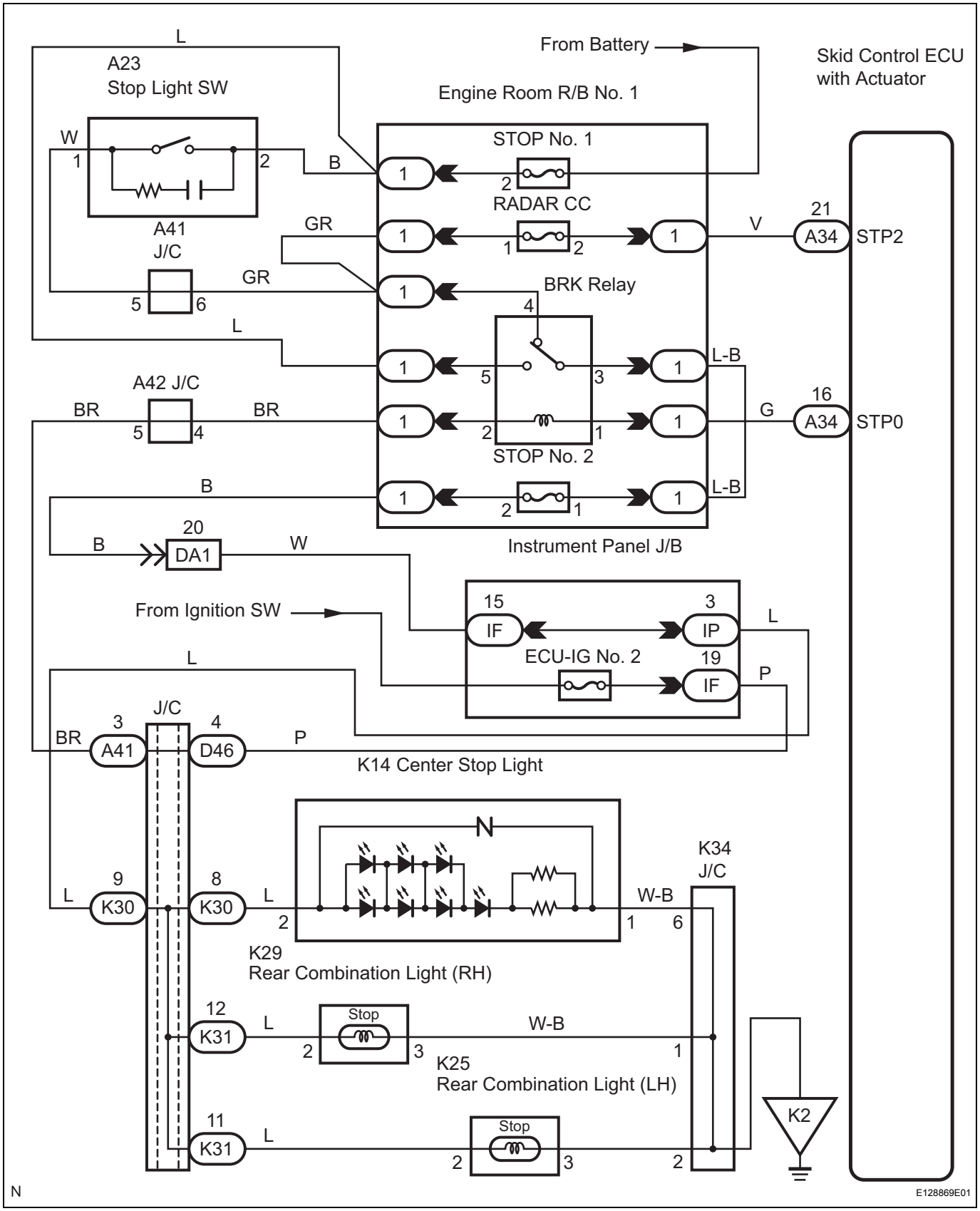

INSPECTION PROCEDURE

1	CHECK BRK RELAY

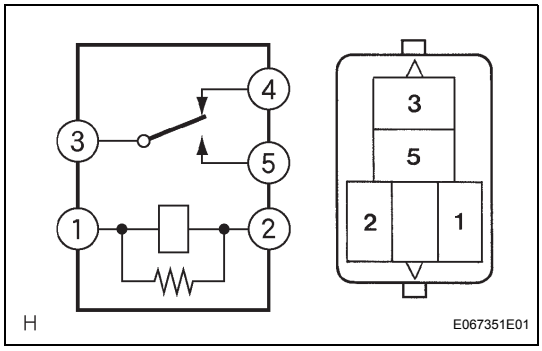

(a) Remove the BRK relay from the engine room R/B No.1.
(b) Check operation of the BRK relay.
Standard resistance

Terminal No.	Condition	Specified value
3 - 5	Always	10 kΩ or higher
3 - 5	When battery voltage is applied to terminal 1 and 2.	Below 1 Ω

NG → REPLACE BRK RELAY

OK

2	CHECK WIRE HARNESS AND CONNECTOR (BRK RELAY - BATTERY)

Wire Harness View:

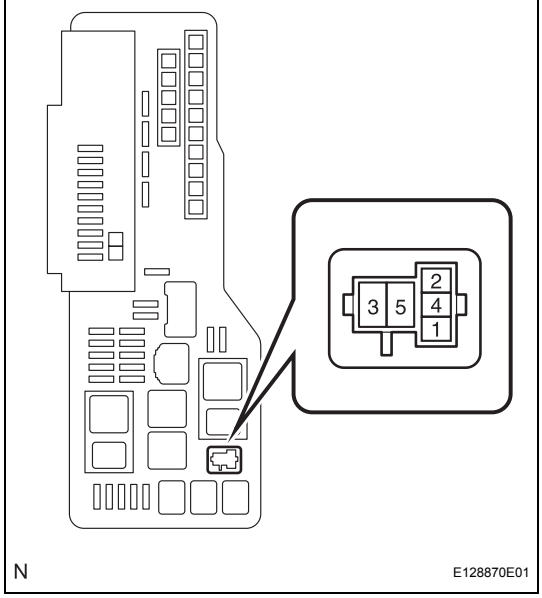

(a) Disconnect the connector from the engine room R/B No. 1.
(b) Measure the voltage according to the value(s) in the table below.
Standard voltage

Terminal No.	Condition	Specification
5 - Body ground	Ignition switch on (IG)	10 to 14 V
5 - Body ground	Ignition switch off	Below 1 V
2 - Body ground	Ignition switch on (IG)	10 to 14 V
2 - Body ground	Ignition switch off	Below 1 V

NG → CHECK FOR SHORT IN ALL HARNESS AND COMPONENTS CONNECTED FAILURE RELAY (BRK RELAY)

OK

3	CHECK WIRE HARNESS AND CONNECTOR (BRK RELAY - SKID CONTROL ECU)

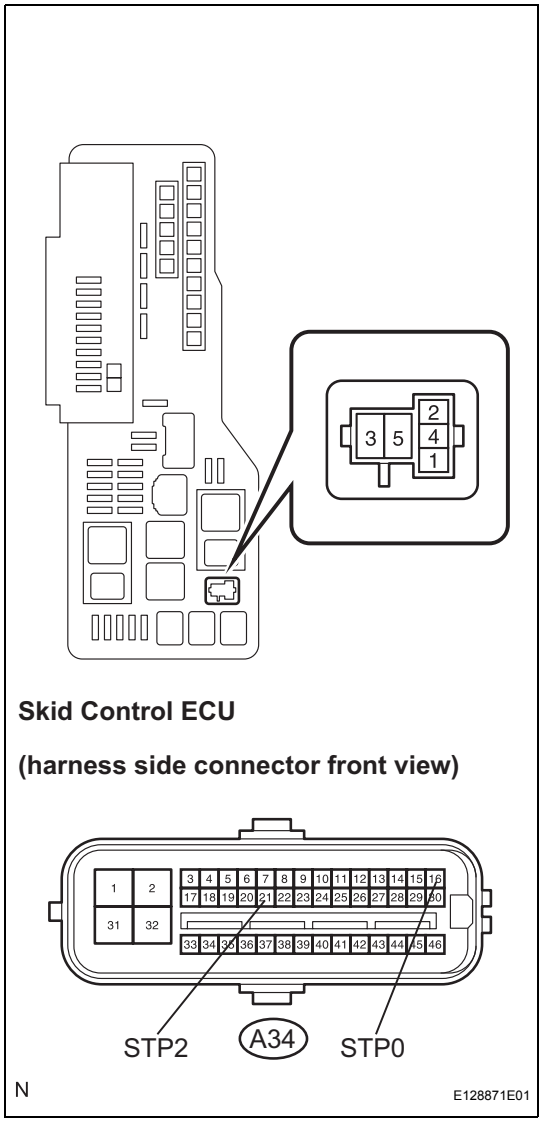

Skid Control ECU

(harness side connector front view)

(a) Disconnect the connector from the skid control ECU.
(b) Measure the resistance according to the value(s) in the table below.

Standard resistance

Terminal No.	Condition	Specification
1 - A34-16 (STP0)	Always	Below 1 Ω
A34-16 (STP0) - Body ground	Always	10 kΩ or higher
4 - A34-21 (STP2)	Always	Below 1 Ω
A34-21 (STP2) - Body ground	Always	10 kΩ or higher

CC

NG → **REPAIR OR REPLACE HARNESS OR CONNECTOR**

OK

REPLACE SKID CONTROL ECU

DTC	P0607	Control Module Performance

DESCRIPTION

This DTC indicates a malfunction in the ECM.
HINT:
The hybrid vehicle control ECU receives signals from each sensor to control all the functions of the cruise control with the microcomputer. When a malfunction is detected, fail-safe remains on until the ignition switch is turned off.

DTC No.	DTC Detection Condition	Trouble Area
P0607	The ECM has a supervisory CPU and a control ECU inside. When each input STP signal is different for 0.15 sec. or more, this trouble code is output. This trouble code is output after 0.4 sec. has passed from the time the cruise cancel input signal (STP input) is input into the ECM.	• ECM

INSPECTION PROCEDURE

1	REPLACE ECM

DTC	P1570	Radar Sensor Malfunction

DESCRIPTION

The laser sensor emits laser beams towards an object in front and measures the distance and direction of the object by receiving the beam reflections. Based on the reflections, the sensor calculates the difference in speed between your own vehicle and an object in front. This data is transmitted to the cruise control ECU (distance control ECU).

DTC No.	DTC Detection Condition	Trouble Area
P1570	The ECM outputs this trouble code when it detects the communication error signal (from the cruise control ECU (distance control ECU) to the laser sensor) for 0.15 sec. or more while the dynamic laser cruise control is in operation.	• Laser sensor

CC

HINT:
The laser sensor monitors the laser emission and reception by itself. This DTC is detected when it cannot monitor.
When rain drops or snowflakes strike the laser sensor face, the distance between the vehicle in front and your own vehicle cannot be measured correctly.
The dynamic laser cruise control system functions by detecting the reflector of the vehicle directly in front. In the following cases, the system may not be able to detect the vehicle in front and may not properly maintain the correct vehicle-to-vehicle distance.

- The vehicle in front is a tall trailer.
- The back of the vehicle in front is extremely dirty.
- Emission from the vehicle in front or from other lanes are heavy.
- The vehicle in front has no reflector.
- The laser sensor is receiving a strong flash of light (sunlight, etc.).

INSPECTION PROCEDURE

1	ADJUST LASER SENSOR

HINT:
It is necessary to make the ECM recognize spec information (whether the vehicle is equipped with the dynamic laser or not). When this procedure has not been carried out, this DTC may be output.

(a) Clear the DTC and then recheck for DTCs.
OK:
DTC is not output.
HINT:
If DTC P1570 is still output after performing the above procedures, replace the laser sensor.

NG → **REPLACE LASER SENSOR**

OK ↓

SYSTEM OK

DTC	P1572	Improper Aiming of Radar Sensor Beam Axis

DESCRIPTION

This DTC is output when the scanning angle of the laser sensor is incorrect.
This DTC is also output when the laser sensor optical axis is in an incorrect position is detected.

DTC No.	DTC Detection Condition	Trouble Area
P1572	The ECM outputs this trouble code when the ECU detects that the laser sensor optical axis is in an incorrect position (0.15 sec. or more) while dynamic laser cruise control is in operation.	• Laser sensor

CC

HINT:
If the optical axis deviates to the upper/lower side +/- 2° or more and/or the right/left side +/- 4° or more, this DTC is detected.

INSPECTION PROCEDURE

1	ADJUST LASER SENSOR

1	ADJUST LASER SENSOR

HINT:
See page CC-121

NEXT

END

DTC	P1575	Warning Buzzer Malfunction

DESCRIPTION

The Skid control ECU receives the alarm demand signal from the ECU and operates the skid control buzzer. The buzzer sounds to warn that the distance between the vehicle in front and your own vehicle is shortening.

DTC No.	DTC Detection Condition	Trouble Area
P1575	This trouble code is output when the ECM receives the buzzer abnormal signal for 0.2 sec. or more while the dynamic laser cruise control is in operation.	• Skid control buzzer assembly • Skid control buzzer circuit • ABS & traction actuator assembly (Skid control ECU)

CC

HINT:

If the vehicle ahead in the same lane significantly decreases its speed or another vehicle moves in front of your own vehicle, adequate deceleration cannot be applied and the vehicle-to-vehicle distance will shorten. At this time, the system sounds the buzzer and the master warning light blinks to inform the driver. This circuit uses CAN communication. Therefore, if there are any malfunctions in the communication circuit, one or more DTCs in the CAN communication system are output.

WIRING DIAGRAM

Refer to the skid control buzzer circuit (See page BC-229).

INSPECTION PROCEDURE

Refer to the skid control buzzer circuit (See page BC-229).

DTC	P1578	Brake System Malfunction

DESCRIPTION

This DTC is output when the VSC system has a problem. Check the VSC system when this DTC is output.

DTC No.	DTC Detection Condition	Trouble Area
P1578	This trouble code is output when the ECM receives the brake system error signal for 0.2 sec. or more while the dynamic laser cruise control is in operation.	• VSC system

INSPECTION PROCEDURE

HINT:

This circuit uses CAN communication. Therefore, if there are any malfunctions in the communication circuit, one or more DTCs in the CAN communication system are output.

1	CHECK BRAKE SYSTEM

DTC	P1615	Communication Error from Distance Control ECU to ECM

DTC	U1101	Lost Communication with Distance Control ECU

DESCRIPTION

The distance control ECU receives information about the area in front of the vehicle from the laser sensor and then sends a brake control demand signal (deceleration demand) and diagnosis signals, such as laser sensor grime or laser sensor malfunction, to the ECM.

DTC No.	DTC Detection Condition	Trouble Area
P1615	While the dynamic laser cruise control is either preparing for operation or operating, if communication data from the distance control ECU is inconsistent logically for a certain amount of time or more, the ECM records the logical error code.	• Communication circuit • Distance control ECU (Cruise control ECU) • ECM
U1101	While the dynamic laser cruise control is either preparing for operation or operating, if communication data from the distance control ECU is invalid for a certain amount of time or more, the ECM records the communication cut off code.	• Communication circuit • Distance control ECU (Cruise control ECU) • ECM

INSPECTION PROCEDURE

HINT:

This circuit uses CAN communication. Therefore, one or more DTCs in the CAN communication system are output if there are any malfunctions in the communication circuit.

1	GO TO CAN COMMUNICATION SYSTEM

DTC	P1616	Communication Error from ECM to Distance Control ECU

DTC	U0100	Lost Communication with ECM/PCM "A"

DESCRIPTION

The ECM receives signals from each sensor and ECU, then sends signals such as the A/T signal, cruise control operation signal, low speed operation signal, brake control operation signal and laser light emission prohibiting signal, etc. to the distance control ECU.

The ECM is the only component that has a function to record and output the DTCs in the dynamic laser cruise control system. Therefore if the distance control ECU detects a communication error from the ECM, it sends the malfunction signal back to the ECM.

DTC No.	DTC Detection Condition	Trouble Area
P1616	While the dynamic laser cruise control is either preparing for operation or operating, if the ECM continuously receives the logical error signal from the distance control ECU for a certain amount of time, the ECM records the logical error code.	• Communication circuit • ECM • Distance control ECU (Cruise control ECU)
U0100	While the dynamic laser cruise control is either preparing for operation or operating, if the ECM continuously receives a communication cut off signal from the distance control ECU for a certain amount of time, the ECM records the communication cut off code.	• Communication circuit • ECM • Distance control ECU (Cruise control ECU)

INSPECTION PROCEDURE

HINT:

This circuit uses CAN communication. Therefore, if there are any malfunction in the communication circuit, one or more DTCs in the CAN communication system are output.

1	GO TO CAN COMMUNICATION SYSTEM

DTC	P1617	Distance Control ECU Malfunction

DESCRIPTION

In the dynamic laser cruise control system, the ECM and the distance control ECU communicate with one another to control the system based on some designation information. If the designation information of the ECM and distance control ECU is different from each other, this DTC is recorded.

DTC No.	DTC Detection Condition	Trouble Area
P1617	While the dynamic laser cruise control is either preparing for operation or operating, if the designation signal from the ECM and the designation return signal from the distance control ECU do not match one another for a certain amount of time or more, the ECM records this trouble code.	• Cruise control ECU (Distance control ECU)

CC

INSPECTION PROCEDURE

1	CONFIRM THE DESIGNATION INFORMATION

(a) If this DTC is output, confirm the designation information by following the procedures below.
  (1) Turn the ignition switch on (IG).
  (2) Push the ON-OFF button of the cruise main switch on.
  (3) With the brake pedal depressed, push the cruise control main switch to RES / ACC 3 times within 3 seconds. Check that the VSC buzzer sounds at this time.
  NOTICE:
  Do not turn the headlight dimmer switch on at this time because the optical axis automatic adjustment mode has already started, which could lead to incorrect optical axis. If the light control switch is turned on by mistake, readjust the optical axis (refer to See page CC-121 for optical axis adjustment).
  (4) Clear the DTC and then recheck for DTCs.
  OK:
  DTC is not output.
  HINT:
  If DTC P1617 is still output after performing the above procedures, replace the distance control ECU.
  • If the DTC P1617 is still output after replacing the distance control ECU, replace the ECM.

NG → **REPLACE CRUISE CONTROL ECU**

OK

SYSTEM OK

DTC	P1630	Communication Error from VSC to ECM

DTC	U0122	Lost Communication with Vehicle Dynamics Control Module

DESCRIPTION

The skid control ECU sends signals such as cruise control cancel demand signal, brake operation demand response signal from the ECM, etc. to the ECM when the dynamic laser cruise control system is in operation.

DTC No.	DTC Detection Condition	Trouble Area
P1630	While the dynamic laser cruise control is either preparing for operation or operating, if the communication data from the skid control ECU is inconsistent logically for a certain amount of time or more, the ECM records the logical error code.	• Communication circuit • ABS & traction actuator assembly (Skid control ECU) • ECM
U0122	While the dynamic laser cruise control is either preparing for operation or operating, if the communication data from the skid control ECU is invalid for a certain amount of time or more, the ECM records the communication cut off code.	• Communication circuit • ABS & traction actuator assembly (Skid control ECU) • ECM

INSPECTION PROCEDURE

HINT:

This circuit uses CAN for communication. Therefore, if there are any malfunctions in the communication circuit, one or more DTCs in the CAN communication system is / are output.

1	GO TO CAN COMMUNICATION SYSTEM

DTC	P1631	Communication Error from ECM to VSC

DTC	U0100	Lost Communication with ECM/PCM "A"

DESCRIPTION

The ECM sends signals such as A/T information signal, dynamic laser cruise control operation signal, brake operation demand signal, buzzer operation demand signal and low speed mode signal, etc. to the skid control ECU when the dynamic laser cruise control is in operation.
The ECM is the only component that has a function to record and output the DTCs in the dynamic laser cruise control system. Therefore if the skid control ECU detects a communication error from the ECM, it sends the malfunction signal back to the ECM.

DTC No.	DTC Detection Condition	Trouble Area
P1631	While the dynamic laser cruise control is either preparing for operation or operating, if the ECM continuously receives the logical error signal from the skid control ECU for a certain amount of time, the ECM records the logical error code.	• Communication circuit • ECM • ABS & traction actuator assembly (Skid control ECU)
U0100	While the dynamic laser cruise control is either preparing for operation or operating, if the ECM continuously receives a communication cut off signal from the skid control ECU for a certain amount of time, the ECM records the communication cut off code.	• Communication circuit • ECM • ABS & traction actuator assembly (Skid control ECU)

INSPECTION PROCEDURE

HINT:
This circuit uses CAN for communication. Therefore, if there are any malfunctions in the communication circuit, one or more DTCs in the CAN communication system is / are output.

1	GO TO CAN COMMUNICATION SYSTEM

DTC	U0123	Communication Error of Yaw Rate Sensor

DESCRIPTION

This circuit detects the yaw rate of the vehicle and transmits its signal to the skid control ECU and distance control ECU.

DTC No.	DTC Detection Condition	Trouble Area
U0123	While the dynamic laser cruise control is either preparing for operation or operating, if the ECM continuously receives a yaw rate sensor malfunction signal for a certain amount of time, distance control ECU sends a signal to the ECM to record this trouble code.	• Communication circuit • Yaw rate sensor • Cruise control ECU (Distance control ECU) • ECM

INSPECTION PROCEDURE

HINT:

This circuit uses CAN for communication. Therefore, if there are any malfunctions in the communication circuit, one or more DTCs in the CAN communication system is / are output.

1	GO TO CAN COMMUNICATION SYSTEM

DTC	U0126	Lost Communication with Steering Angle Sensor Module

DESCRIPTION

This circuit detects the angle and direction of steering and automatically transmits its signal to the skid control ECU and distance control ECU.

DTC No.	DTC Detection Condition	Trouble Area
U0126	While the dynamic laser cruise control is either preparing for operation or operating, if the ECM continuously receives a steering sensor communication error signal for a certain amount of time, distance control ECU sends a signal to the ECM to record this trouble code.	• Communication circuit • Steering sensor • Cruise control ECU (Distance control ECU) • ECM

INSPECTION PROCEDURE

HINT:

This circuit uses CAN for communication. Therefore, if there are any malfunctions in the communication circuit, one or more DTCs in the CAN communication system is / are output.

1	GO TO CAN COMMUNICATION SYSTEM

DTC	U0235	Lost Communication with Cruise Control Front Distance Range Sensor

DESCRIPTION

The laser sensor and cruise control ECU (distance control ECU) transmit the data for general vehicle control and diagnosis function along the communication line.
The laser sensor transmits information about the vehicle in front to the cruise control ECU (distance control ECU).

DTC No.	DTC Detection Condition	Trouble Area
U0235	This trouble code is output when the ECM detects the communication error signal (from the laser sensor to the cruise control ECU (distance control ECU)) for 0.15 sec. or more while the dynamic laser cruise control is in operation.	• Communication circuit • Laser sensor • Cruise control ECU (Distance control ECU)

CC

WIRING DIAGRAM

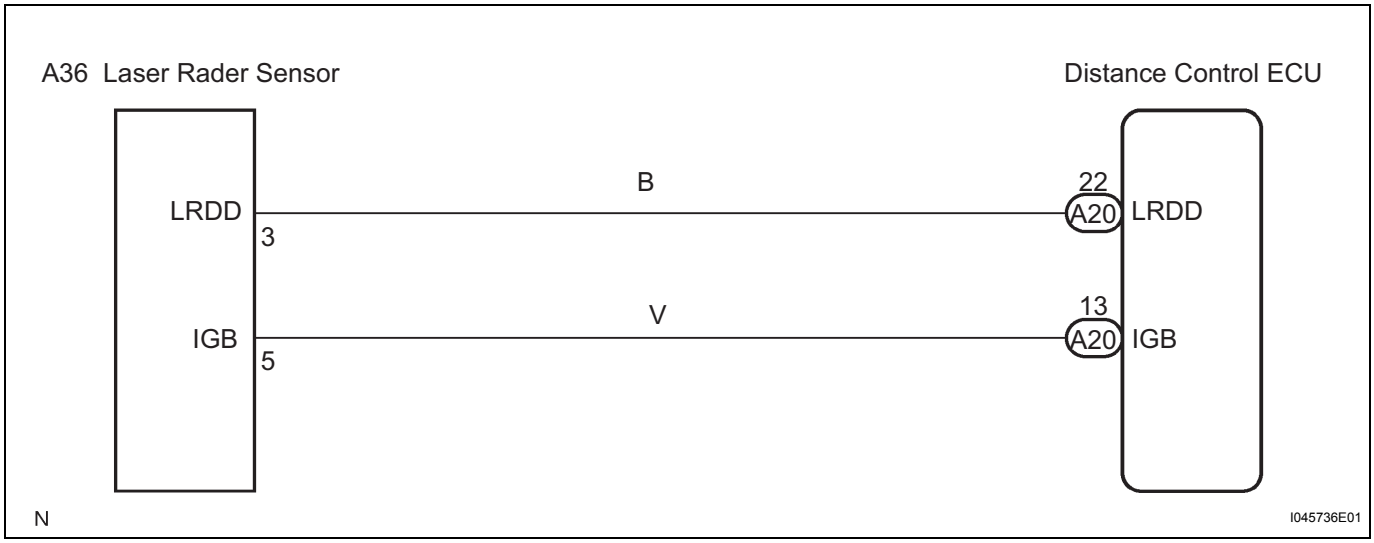

INSPECTION PROCEDURE

1 CHECK WIRE HARNESS (DISTANCE CONTROL ECU - LASER RADAR SENSOR)

Distance Control ECU
Wire Harness View:

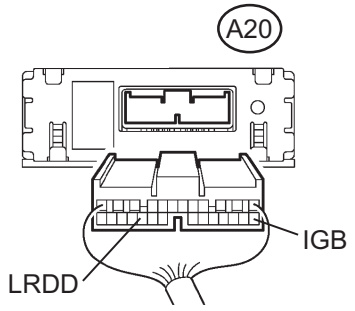

Laser Sensor Wire
Harness View:

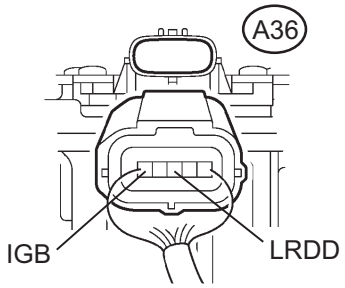

E108175E10

(a) Disconnect the distance control ECU and millimeter wave radar sensor connectors.
(b) Measure the resistance according to the value(s) in the table below.
Standard resistance

Tester Connection	Condition	Specified Condition
A20-22 (LRDD) - A36-3 (LRDD)	Always	Below 1 Ω
A20-13 (IGB) - A36-5 (IGB)	Always	Below 1 Ω
A20-22 (LRDD) - Body ground	Always	10 kΩ or higher
A20-13 (IGB) - Body ground	Always	10 kΩ or higher

NG → **REPAIR OR REPLACE HARNESS OR CONNECTOR**

OK

2 CHECK DISTANCE CONTROL ECU

Distance Control ECU
Wire Harness View:

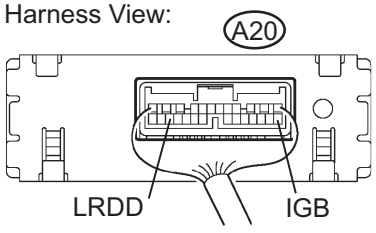

N I034909E27

(a) Reconnect the distance control ECU (cruise control ECU) connector. Not reconnect the millimeter wave radar sensor connector.
(b) Turn the ignition switch on (IG).
(c) Measure the voltage according to the value(s) in the table below.
Standard voltage

Tester Connection	Condition	Specified Condition
A20-13 (IGB) - Body ground	Ignition switch on (IG)	10 to 16 V
A20-22 (LRDD) - Body ground	Ignition switch on (IG)	4.5 to 5.5 V

NG → **REPLACE DISTANCE CONTROL ECU**

OK

3	CHECK LASER RADAR SENSOR

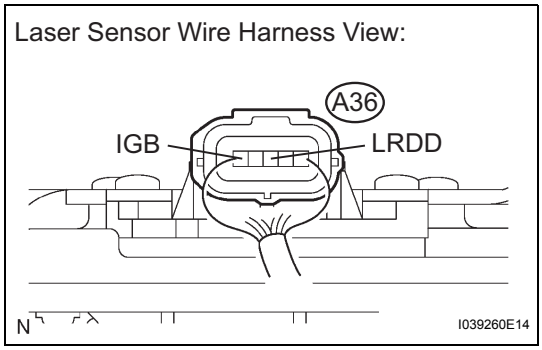

(a) Reconnect the laser sensor connector.
(b) Measure the voltage according to the value(s) in the table below.

Standard voltage

Tester Connection	Condition	Specified Condition
A36-5 (IGB) - Body ground	Ignition switch on (IG)	10 to 14 V

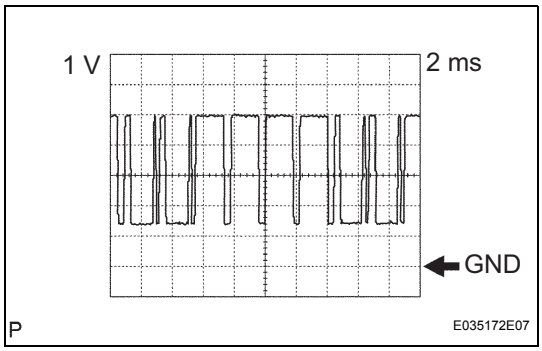

(c) Check the signal waveform between terminal LRDD (A36-3) of the laser sensor and body ground.

OK:

A waveform similar to that in the illustration on the left is output.

HINT:

- Gauge set: 2 V/DIV, 10 msec./DIV
- Condition: Ignition switch on

NG → **REPLACE LASER RADAR SENSOR**

OK

CHECK FOR INTERMITTENT PROBLEMS

DTC	U1102	Lost Communication with Radar Sensor

DESCRIPTION

The laser sensor and cruise control ECU (distance control ECU) transmit the data for general vehicle control and diagnosis function along the communication line.
The cruise control ECU (distance control ECU) determines the presumed R information based on the signal from the steering wheel and yaw rate sensor.
The cruise control ECU (distance control ECU) transmits the current vehicle speed and presumed R information to the laser sensor.

DTC No.	DTC Detection Condition	Trouble Area
U1102	This trouble code is output when the ECM detects the communication error signal (from the cruise control ECU (distance control ECU) to the laser sensor) for 0.15 sec. or more while the dynamic laser cruise control is in operation.	• Communication circuit • Laser sensor • Cruise control ECU (Distance control ECU)

WIRING DIAGRAM

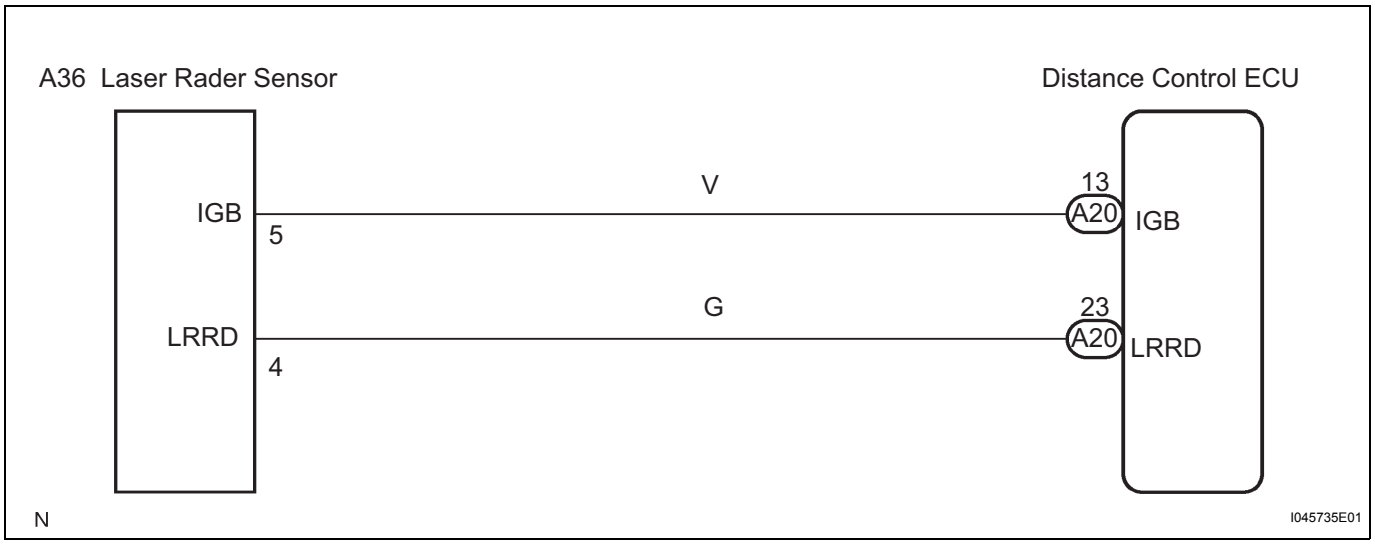

INSPECTION PROCEDURE

1	CHECK WIRE HARNESS AND CONNECTOR (DISTANCE CONTROL ECU - LASER SENSOR)

Distance Control ECU Wire Harness View:

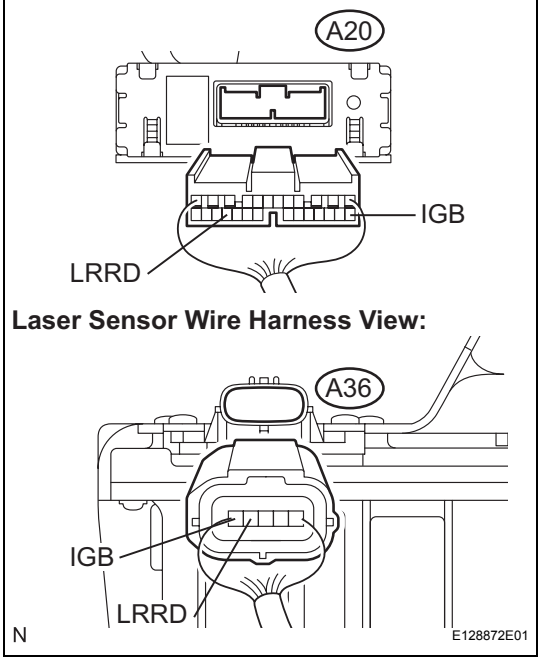

(a) Disconnect the distance control ECU and laser sensor connectors.
(b) Measure the resistance according to the value(s) in the table below.

Standard resistance

Tester Connections	Condition	Specified value
A20-23 (LRRD) - A36-4 (LRRD)	Always	Below 1 Ω
A20-13 (IGB) - A36-5 (IGB)	Always	Below 1 Ω
A20-23 (LRRD) - Body ground	Always	10 kΩ or higher
A20-13 (IGB) - Body ground	Always	10 kΩ or higher

NG → **REPAIR OR REPLACE HARNESS OR CONNECTOR**

NO

2	INSPECT CRUISE CONTROL ECU (DISTANCE CONTROL ECU)

Wire Harness View:

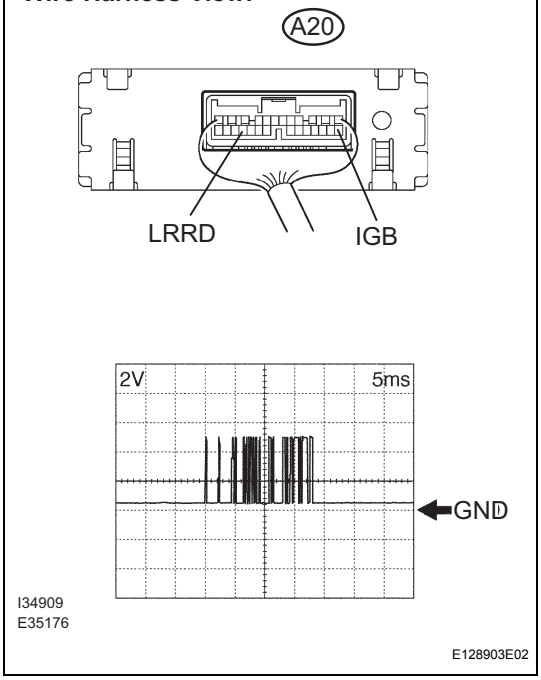

(a) Reconnect the cruise control ECU (distance control ECU) connector.
(b) Turn the ignition switch on (IG).
(c) Measure the voltage according to the value(s) in the table below.

Standard voltage

Tester Connections	Condition	Specified value
A20-13 (IGB) - Body ground	Ignition SW ON (IG)	10 to 14 V

(d) Check the signal waveform between terminal LRRD (A20-23) of the cruise control ECU (distance control ECU) and body ground.

OK:

A waveform similar to that in the illustration to the left is output.

HINT:
- Gauge set: 2 V/DIV, 5 ms/DIV
- Condition: Ignition switch on (IG)

NG → **REPLACE CRUISE CONTROL ECU**

NO

REPLACE LASER SENSOR

Cruise Control Switch Circuit

DESCRIPTION

The cruise control main switch operates 8 functions: SET, COAST, TAP-DOWN, RESUME, ACCEL, TAP-UP, CANCEL and MODE. The SET, TAP-DOWN and COAST functions, and the RESUME, TAP-UP and ACCEL functions are operated with the same switch. The cruise control main switch is an automatic return type switch which turns on only while operating it in each arrow direction and turns off after releasing it. The internal contact point of the cruise control main switch is turned on with the switch operation. The hybrid vehicle control ECU then reads the resistance value that has been changed by the switch operation to control MODE, SET, COAST, RESUME, ACCEL and CANCEL. The dynamic radar cruise control system has two cruise control modes: the constant speed control mode and vehicle-to-vehicle distance control mode.

CC

- The vehicle-to-vehicle distance control mode is always selected when starting up the dynamic radar cruise control system.
- The operation of the constant speed control mode is the same as that for a conventional cruise control system.

WIRING DIAGRAM

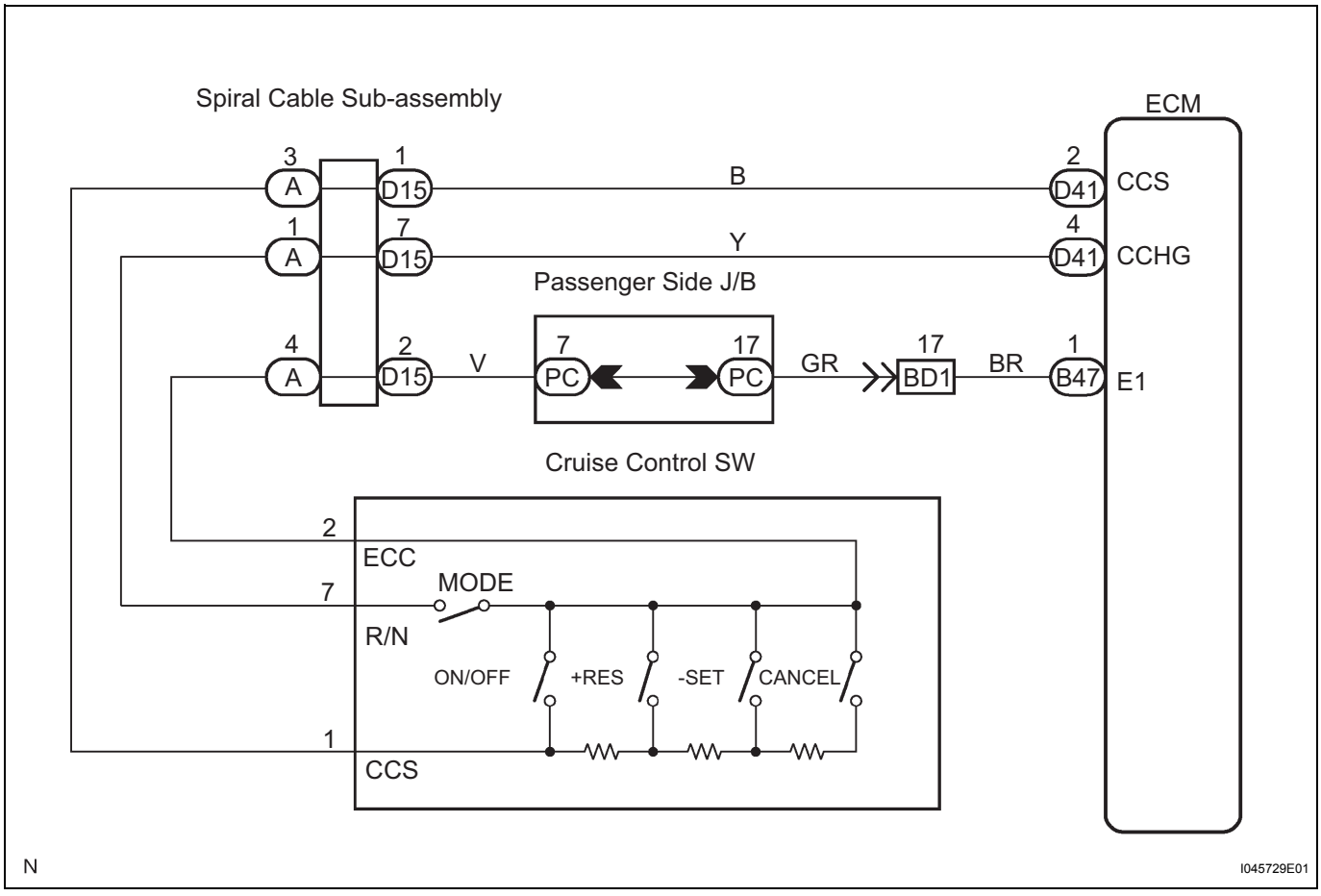

INSPECTION PROCEDURE

1	READ VALUE OF INTELLIGENT TESTER

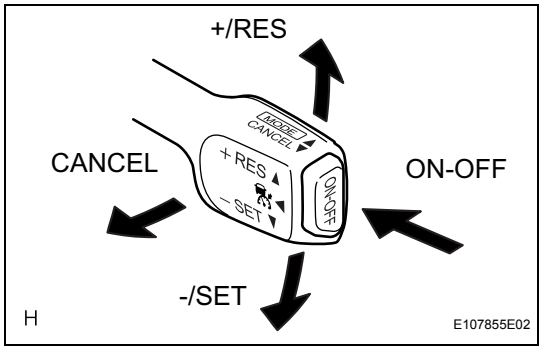

(a) Connect the intelligent tester to the DLC3.
(b) Turn the ignition switch on (IG), and turn the intelligent tester main switch on.
(c) Check the DATA LIST for proper functioning of the cruise control main switch.

CC

CC (ECM):

Item	Measurement Item / Display (Range)	Normal Condition	Diagnostic Note
MAIN SW (MAIN)	Main switch signal (Main CPU) / ON or OFF	ON: Main switch ON (Pushed on) OFF: Main switch OFF (Pushed off)	-
CANCEL SW	CANCEL switch signal / ON or OFF	ON: CANCEL switch ON OFF: CANCEL switch OFF	-
SET/COAST SW	-/SET switch signal / ON or OFF	ON: -/SET switch ON OFF: -/SET switch OFF	-
RES/ACC SW	+/RES switch signal / ON or OFF	ON: +/RES switch ON OFF: +/RES switch OFF	-

OK:

When cruise control main switch operation is performed, the result will be same as above.

Result:

Result	Proceed to
OK	A
NG (all items are defective)	B
NG (one to four items are defective)	C

A → **PROCEED TO NEXT CIRCUIT INSPECTION SHOWN IN PROBLEM SYMPTOMS TABLE**

C → **REPLACE CRUISE CONTROL MAIN SWITCH**

B

2	INSPECT CRUISE CONTROL MAIN SWITCH

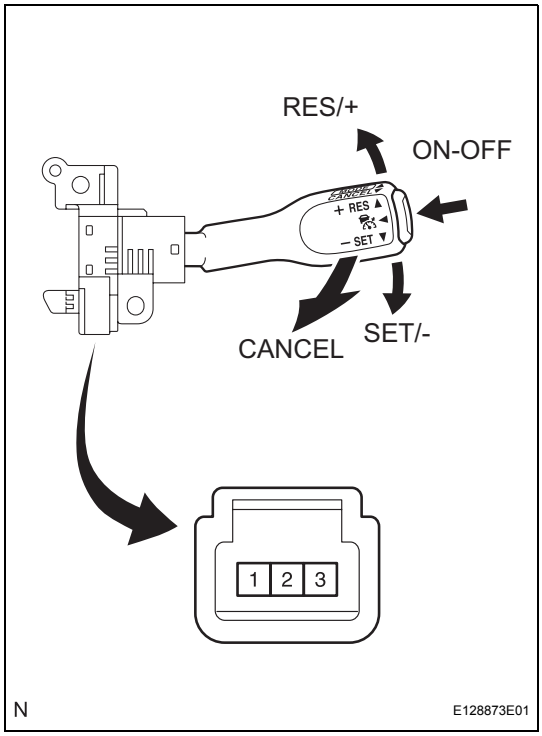

(a) Disconnect the cruise control main switch connector.
(b) Measure the resistance according to the value(s) in the table below.

Standard resistance

Switch Condition	Tester Connection	Specified Condition
Neutral	1 - 3	10 kΩ or higher
RES/+	1 - 3	210 to 270 Ω
SET/-	1 - 3	560 to 700 Ω
CANCEL	1 - 3	1,380 to 1,700 Ω
Main Switch OFF	1 - 3	10 kΩ or higher
Main Switch OFF	1 - 3	Below 1 Ω

NG → REPLACE CRUISE CONTROL MAIN SWITCH

OK

3 INSPECT SPIRAL CABLE

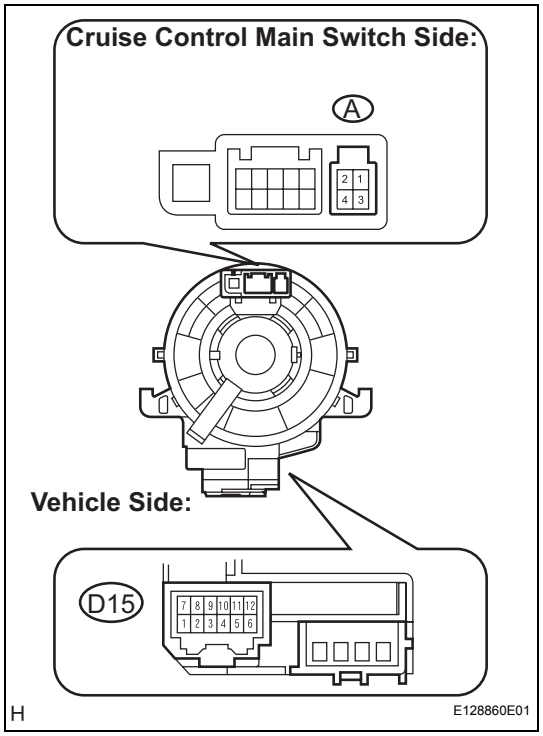

(a) Disconnect the spiral cable sub-assembly connector.
(b) Measure the resistance according to the value(s) in the table below.

Standard resistance

Tester Condition	Specified Condition
A-1 - D15-7	Below 1 Ω
A-3 - D15-1	Below 1 Ω
A-4 - D15-2	Below 1 Ω

CC

NG → **REPLACE SPIRAL CABLE**

OK

4 CHECK WIRE HARNESS (SPIRAL CABLE - ECM)

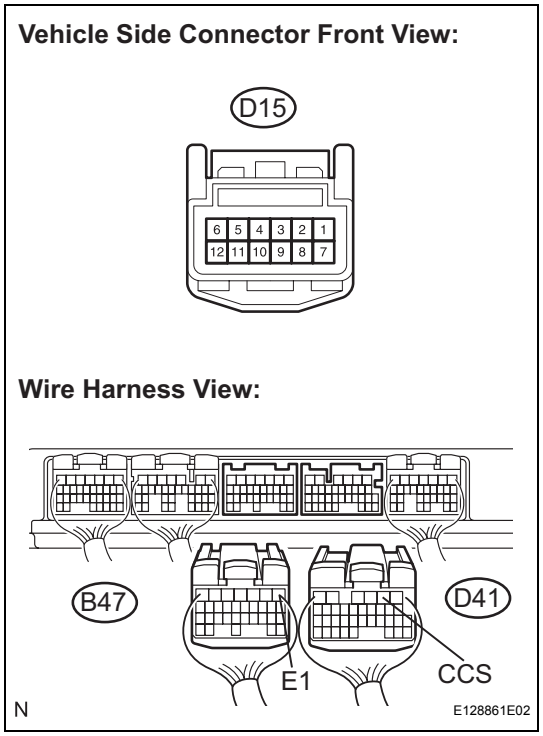

(a) Measure the resistance according to the value(s) in the table below.

Standard resistance

Tester Connection	Condition	Specified Condition
Spiral cable (D15-1) - CCS (D41-2)	Always	Below 1 Ω
CCS (D41-2) - Body ground	Always	10 kΩ or higher
Spiral cable (D15-2) - E1 (B47-1)	Always	Below 1 Ω
Spiral cable (D15-7) - Body ground	Always	10 kΩ or higher
Spiral cable (D15-7) - CCHG (D41-4)	Always	Below 1 Ω
CCHG (D41-4) - Body ground	Always	10 kΩ or higher

NG → **REPAIR OR REPLACE HARNESS OR CONNECTOR**

OK

5	CHECK WIRE HARNESS (SPIRAL CABLE - BODY GROUND)

Vehicle Side Connector Front View:

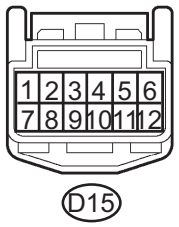

N E107092E08

(a) Measure the resistance according to the value(s) in the table below.

Standard resistance

Tester Connection	Condition	Specified Condition
D15-2 - Body ground	Always	Below 1 Ω

NG → **REPAIR OR REPLACE HARNESS OR CONNECTOR**

OK

REPLACE ECM

CC

Distance Control ECU Power Source Circuit

DESCRIPTION

This circuit provides power to operate the cruise control ECU (distance control ECU). The distance control ECU determines the vehicle that you are following based on data from the laser sensor and then decides how much acceleration and / or deceleration is needed to maintain the set distance. It also requests the skid control ECU to apply braking and sound the buzzer.

WIRING DIAGRAM

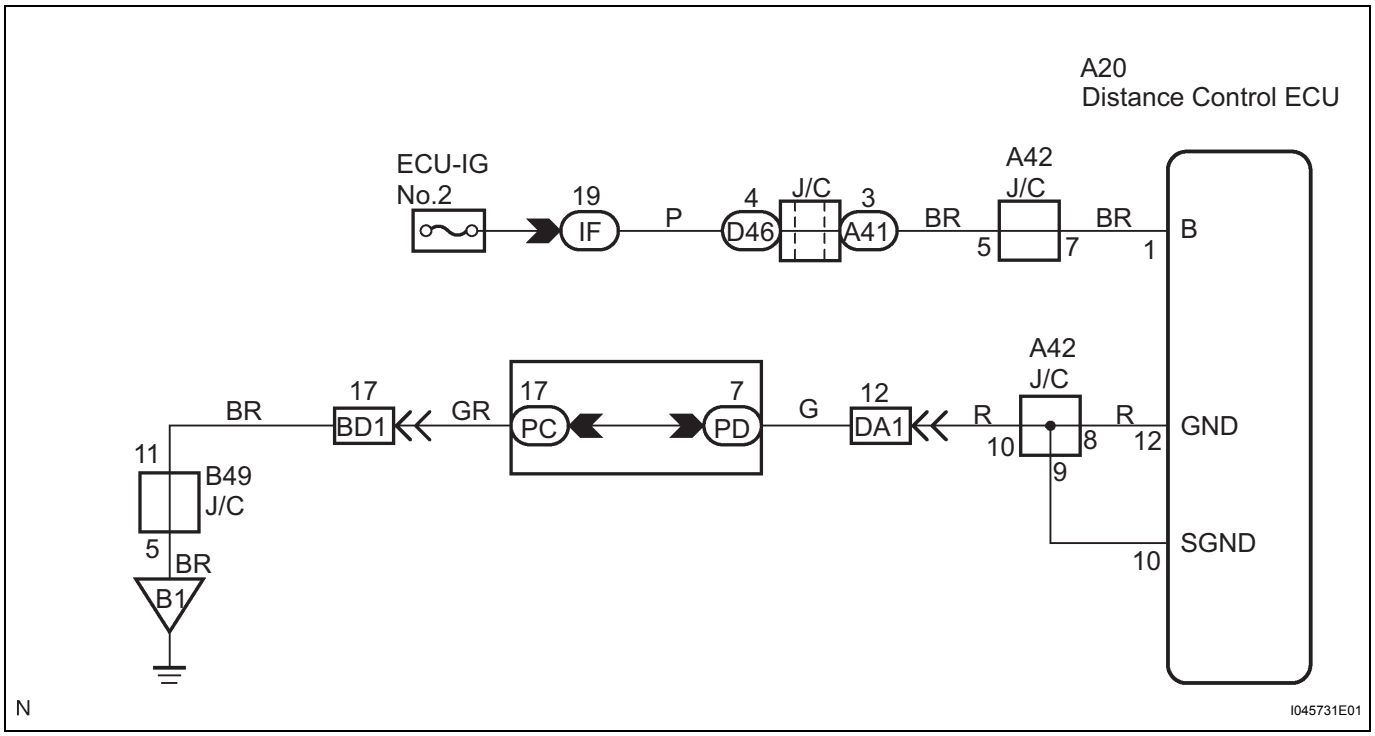

INSPECTION PROCEDURE

1	CHECK DISTANCE CONTROL ECU

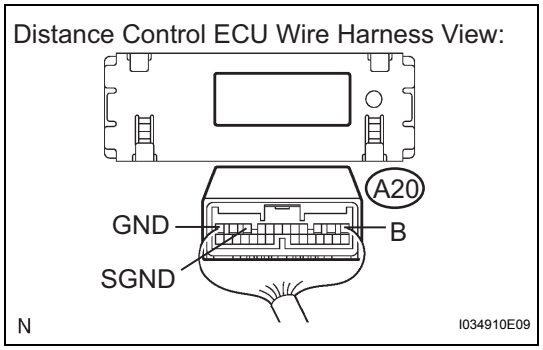

(a) Disconnect the distance control ECU connector.
(b) Measure the voltage according to the value(s) in the table below.

Standard voltage

Tester Connection	Condition	Specified Condition
A20-1 (B) - Body ground	Ignition switch on	10 to 14 V

(c) Measure the resistance according to the value(s) in the table below.

Standard resistance

Tester Connection	Condition	Specified Condition
A20-10 (SGND) - Body ground	Always	Below 1 Ω
A20-12 (GND) - Body ground	Always	Below 1 Ω

NG → **REPAIR OR REPLACE HARNESS OR CONNECTOR**

OK

PROCEED TO NEXT CIRCUIT INSPECTION SHOWN IN PROBLEM SYMPTOMS TABLE

Distance Control Switch Circuit

DESCRIPTION

This switch sets the vehicle-to-vehicle distance mode.

WIRING DIAGRAM

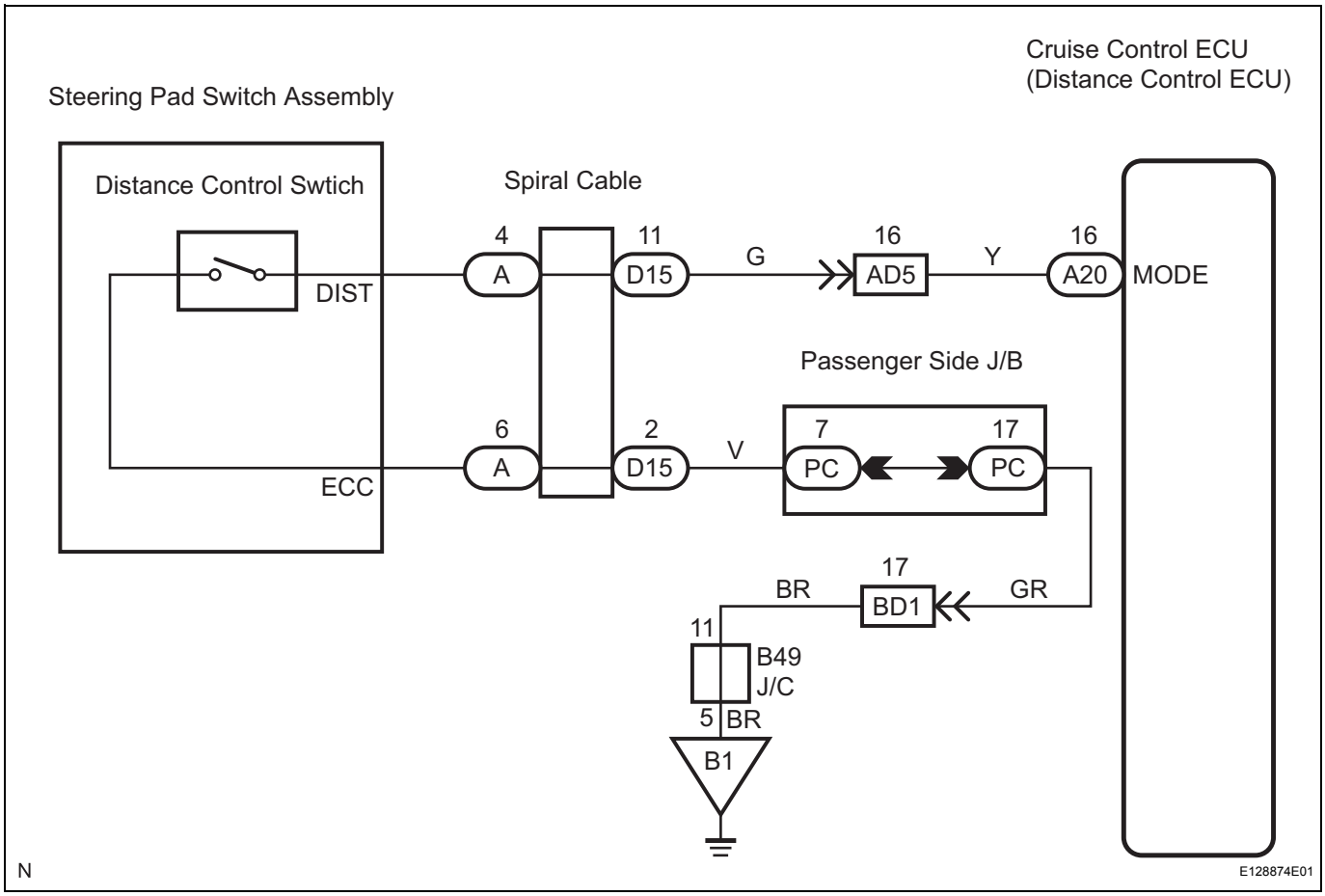

INSPECTION PROCEDURE

1	READ VALUE ON INTELLIGENT TESTER

(a) Connect the intelligent tester to the DLC3.
(b) Turn the ignition switch on (IG), and turn the intelligent tester main switch on.
(c) According to the display on the tester, read the "DATA LIST".

CC (ECM):

Item	Measurement Item / Display (Range)	Normal Condition	Diagnostic Note
DISTANCE TIME	Car distance time setting condition /SHRT, MID, LONG, NO	Distance selected by distance control switch	-

OK:

Distance selected by the distance control switch is shown on the display.

NG → Go to step 2

OK

PROCEED TO NEXT CIRCUIT INSPECTION SHOWN IN PROBLEM SYMPTOMS TABLE

2	INSPECT STEERING PAD SWITCH ASSEMBLY

CC

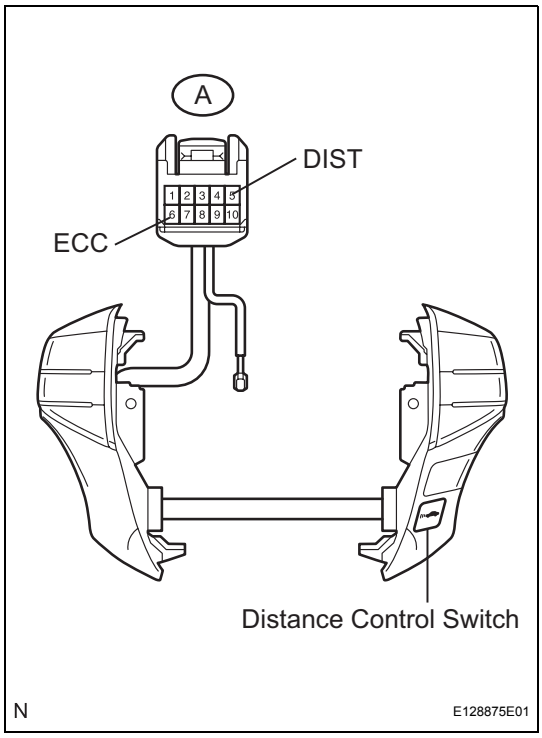

(a) Remove the steering pad switch assembly.
(b) Measure the resistance between terminals 4 (DIST) and 6 (ECC) of the steering pad switch assembly connector when the distance control switch is operated.

Standard resistance

Switch position	Specified value
Distance control switch is ON	Below 2.5 Ω
Distance control switch is OFF	100 kΩ or higher

HINT:
When a malfunction is detected in the distance control switch, replace the steering pad switch assembly.

NG → **PROCEED TO NEXT CIRCUIT INSPECTION SHOWN IN PROBLEM SYMPTOMS TABLE**

OK

3	INSPECT SPIRAL CABLE

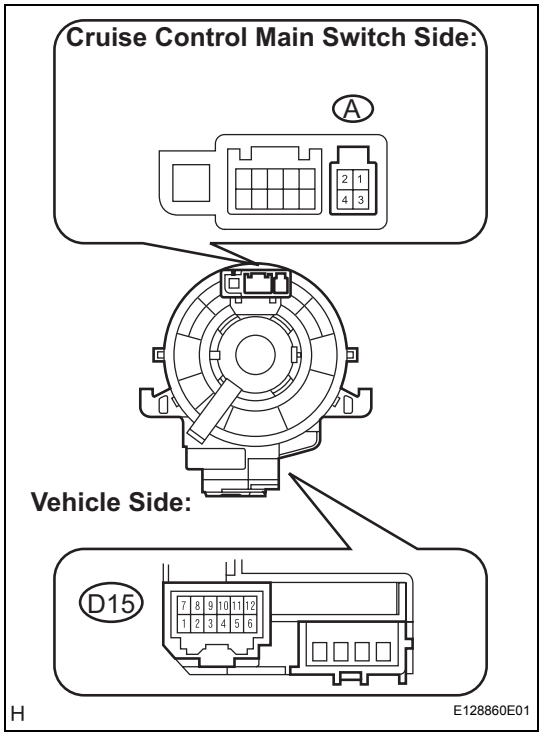

(a) Disconnect the spiral cable connector.
(b) Measure the resistance between terminals A and C13 of the spiral cable.

Standard resistance

Tester No.	Specified value
A-4 - D15-11	Below 1 Ω
A-6 - D15-2	Below 1 Ω

CC

NG → **REPLACE STEERING PAD SWITCH ASSEMBLY**

OK

4	CHECK WIRE HARNESS (DISTANCE CONTROL ECU - SPIRAL CABLE)

Distance Control ECU Connector
Wire Harness View:

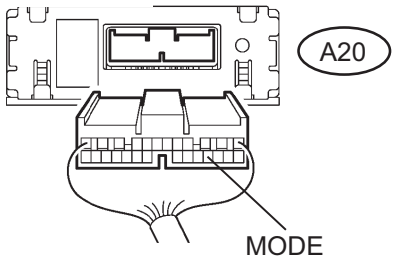

Spiral Cable Connector
Wire Harness View:

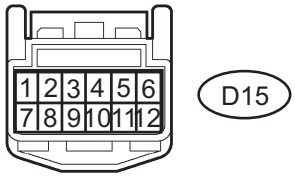

E109734E06

(a) Disconnect the distance control ECU connector.
(b) Measure the resistance according to the value(s) in the table below.

Standard resistance

Tester Connection	Condition	Specified Condition
D15-11 - A20-16 (MODE)	Always	Below 1 Ω
A20-16 (MODE) - Body ground	Always	10 kΩ or higher

NG → REPLACE SPIRAL CABLE

OK

5	CHECK WIRE HARNESS (SPIRAL CABLE - BODY GROUND)

Vehicle Side Connector Front View:

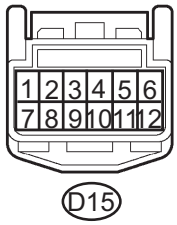

N

E107092E09

(a) Measure the resistance according to the value(s) in the table below.

Standard resistance

Tester Connection	Condition	Specified Condition
D15-2 - Body ground	Always	Below 1 Ω

NG → REPLACE SPIRAL CABLE

OK

6	INSPECT DISTANCE CONTROL ECU

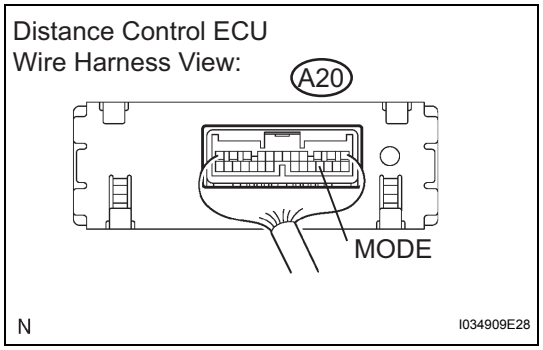

(a) Remove the distance control ECU (cruise control ECU) with the connector.
(b) Turn the ignition switch on (IG).
(c) Measure the voltage according to the value(s) in the table below.

Standard voltage

Tester Connection	Condition	Specified Condition
A20-16 (MODE) - Body ground	Distance control switch ON	0 to 2 V
A20-16 (MODE) - Body ground	Distance control switch OFF	9 to 16 V

CC

NG → **REPAIR OR REPLACE HARNESS OR CONNECTOR**

OK

PROCEED TO NEXT CIRCUIT INSPECTION SHOWN IN PROBLEM SYMPTOMS TABLE

Laser Sensor Power Source Circuit

DESCRIPTION

This circuit provides power to operate the laser sensor. The laser sensor emits laser beams towards an object in front and measures the distance and direction of the object by receiving the beam reflections. Based on the reflections, the sensor calculates the difference in speed between your own vehicle and the object in front. This data is transmitted to the distance control ECU (cruise control ECU).
HINT:
The laser sensor monitors the laser emission and reception by itself. This DTC is detected when it cannot monitor.

When rain drops or snowflakes strike the laser sensor face, the distance between the vehicle in front and your own vehicle cannot be measured correctly.
The dynamic laser cruise control system may not be able to detect the vehicle in front and may not properly maintain the correct vehicle-to-vehicle distance.

- The vehicle in front is a tall trailer.
- The back of the vehicle in front is extremely dirty.
- Emissions from the vehicle in from other lanes are heavy.
- The vehicle in front has no reflector.
- The laser sensor is receiving a strong flash of light (sunlight, etc.).

WIRING DIAGRAM

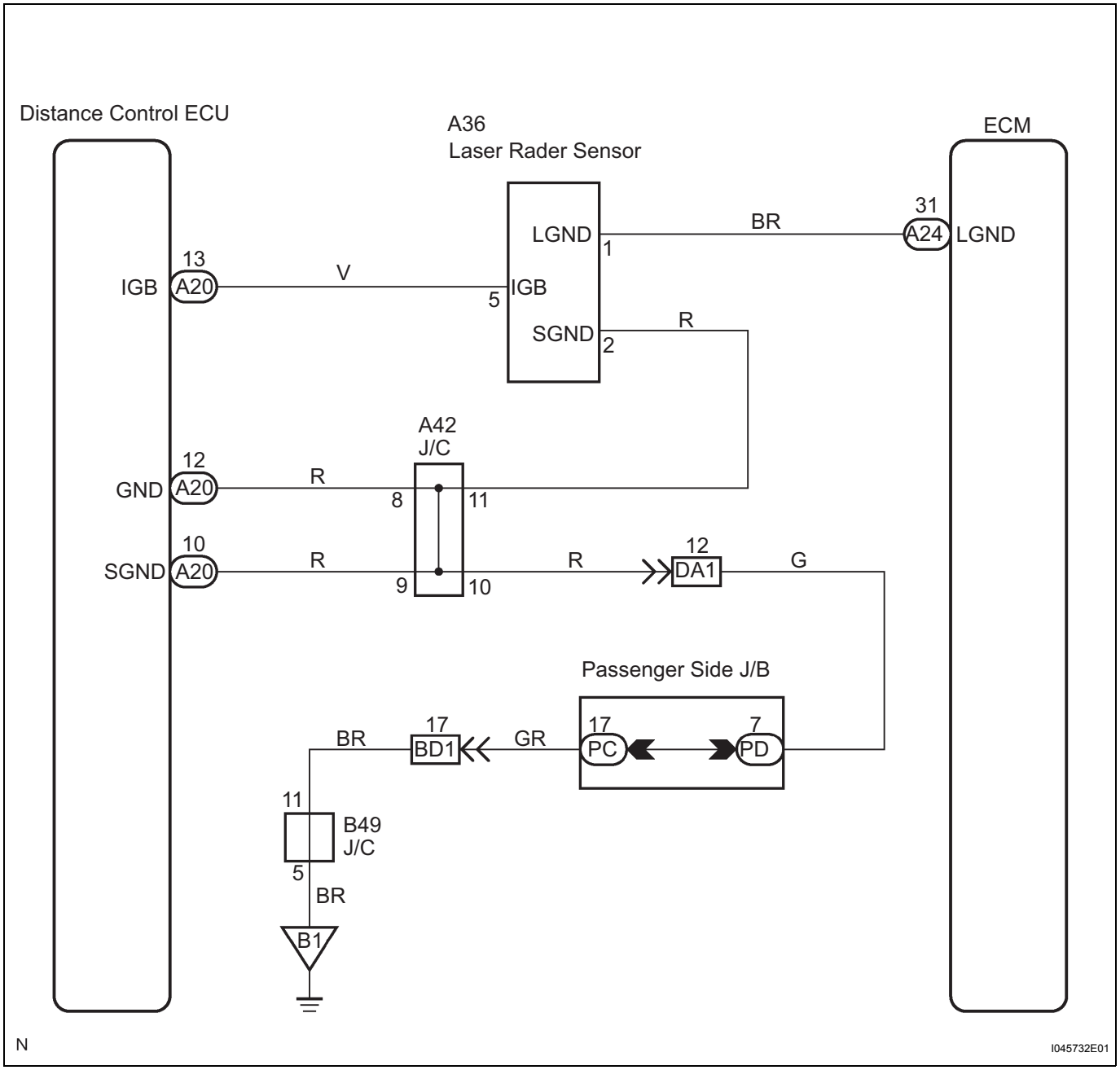

CC

INSPECTION PROCEDURE

1	CHECK CRUISE CONTROL ECU ASSEMBLY (IGB VOLTAGE)

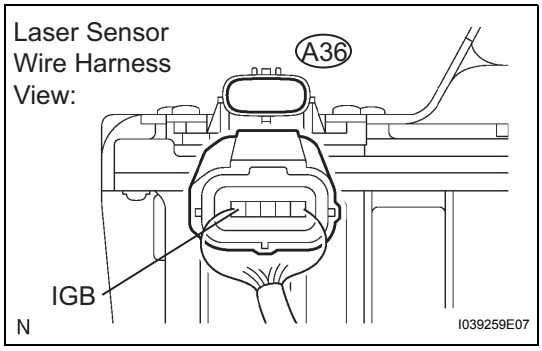

(a) Disconnect the A36 sensor connector.
(b) Measure the voltage of the wire harness side connector.
Standard voltage

Tester Connection	Condition	Specified Condition
A36-5 (IGB) - Body ground	Ignition switch on	10 to 14 V

NG → **Go to step 3**

OK

2	CHECK WIRE HARNESS (LASER RADAR SENSOR - HYBRID CONTROL ECU AND BODY GROUND)

Laser Sensor Wire Harness View:

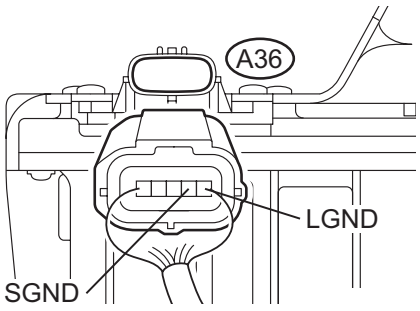

ECM Connector Wire Harness View:

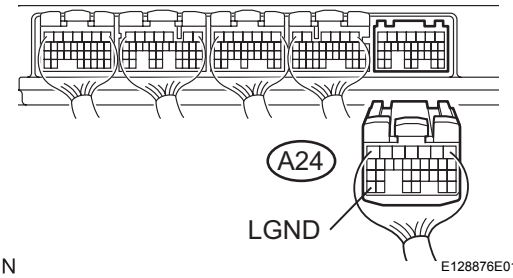

(a) Disconnect the ECM A24 connector.
(b) Measure the resistance according to the value(s) in the table below.
Standard resistance

Tester Connection	Condition	Specified Condition
A36-1 (LGND) - A24-31 (LGND)	Always	Below 1 Ω
A36-1 (LGND) - Body ground	Always	10 kΩ or higher
A36-2(SGND) - Body ground	Always	Below 1 Ω

NG → **REPAIR OR REPLACE HARNESS OR CONNECTOR**

OK

PROCEED TO NEXT CIRCUIT INSPECTION SHOWN IN PROBLEM SYMPTOMS TABLE

3	CHECK WIRE HARNESS (LASER RADAR SENSOR - DISTANCE CONTROL ECU)

Laser Sensor Wire Harness View:

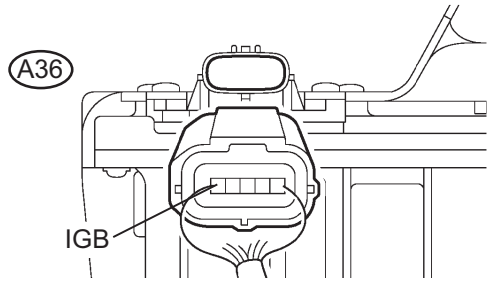

N **Distance Control ECU Wire Harness View:**

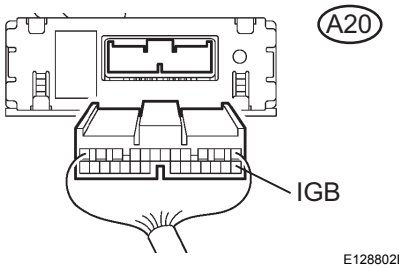

N

E128802E01

(a) Disconnect the cruise control ECU (distance control ECU) connector.

(b) Measure the resistance according to the value(s) in the table below.

Standard resistance

Tester Connection	Condition	Specified Condition
A20-13 (IGB) - A36-5 (IGB)	Always	Below 1 Ω
A20-13 (IGB) - Body ground	Always	10 kΩ or higher

CC

NG → **REPAIR OR REPLACE HARNESS OR CONNECTOR**

OK

PROCEED TO NEXT CIRCUIT INSPECTION SHOWN IN PROBLEM SYMPTOMS TABLE

Wiper Signal Circuit

DESCRIPTION

When the distance control ECU (cruise control ECU) detects that the wipers are operating, the dynamic radar cruise control system will be canceled.
HINT:
A wiper switch signal is sent to the distance control ECU via the CAN and BEAN. If there are any malfunctions in this circuit, check for DTCs in the CAN communication and multiplex communication systems. When the wiper is in the HI mode, the dynamic radar cruise control is automatically canceled and goes into the standby mode.

INSPECTION PROCEDURE

1	**INSPECT WIPER AND WASHER SYSTEM**

OK:
Wiper function is normal.

NG → **GO TO WIPER AND WASHER SYSTEM**

OK

PROCEED TO NEXT CIRCUIT INSPECTION SHOWN IN PROBLEM SYMPTOMS TABLE

Cruise Main Indicator Light Circuit

DESCRIPTION

When the cruise control main switch is on, CRUISE main indicator light come on. This indicates the control condition (presence or absence of a vehicle in front, vehicle-to-vehicle distance, and set vehicle speed) and fail-safe state through the multiplex communication system and CAN communication system. The master warning light and CRUISE main indicator light come on and vehicle-to-vehicle distance information is displayed on the combination meter as the alarm buzzer sounds. Items such as "Clean Radar Sensor", "Cruise not Available", "Check Cruise System" and "Radar Cruise Ready" are displayed in the multi-information display on the combination meter when the hybrid vehicle control ECU detects signals from each sensor and actuator and sends them to the combination meter via CAN and BEAN.

HINT:

If the vehicle in front in the same lane significantly decreases vehicle speed or another vehicle pulls in front of your vehicle, adequate deceleration cannot be applied and the vehicle-to-vehicle distance will shorten. At this time, the system sounds the buzzer and the master warning light blinks to warn the driver. Each indicator in the dynamic radar cruise control uses CAN and BEAN for communication. Therefore if there are any malfunctions in this circuit, check for DTCs in the CAN communication and multiplex communication systems before troubleshooting this circuit.

INSPECTION PROCEDURE

1 **PERFORM ACTIVE TEST BY INTELLIGENT TESTER**

(a) Connect the intelligent tester to the DLC3.
(b) Select the ACTIVE TEST, use the intelligent tester to generate a control command, and then check that the combination meter operates.

COMBINATION METER:

Tester Display	Description	Check Condition
CRUISE INDIC	"CRUISE" indicator is ON / OFF	ON - OFF

OK:
Indicator light comes on.

NG → **REPLACE COMBINATION METER**

OK

2 **READ VALUE OF INTELLIGENT TESTER**

(a) Connect the intelligent tester to the DLC3.
(b) Turn the ignition switch on, and turn the intelligent tester main switch on (IG).
(c) Check the DATA LIST for proper functioning of the CRUISE main indicator light.

CC (ECM):

Item	Measurement Item / Display (Range)	Normal Condition	Diagnostic Note
CCS READY M	Cruise control system standby condition (Main CPU) / ON or OFF	Each time main switch is pushed, ON is displayed and then OFF is displayed	A
CCS INDICATOR M	Cruise indicator signal (Main CPU) / ON or OFF	ON : "CCS READY" ON OFF : "CCS READY" OFF	B

OK:

When cruise control main switch operation is performed, the result will be same as above.

HINT:

A is OK, but B is NG → DTC output or hybrid vehicle control ECU failure

NG → **REPLACE ECM**

OK

CC **PROCEED TO NEXT CIRCUIT INSPECTION SHOWN IN PROBLEM SYMPTOMS TABLE**

TC and CG Terminal Circuit

DESCRIPTION

Connecting terminals TC and CG of the DLC3 causes the system to enter self-diagnostic mode. If a malfunction is present, DTCs will be output.

HINT:

When a particular warning light remains blinking, a ground short in the wiring of terminal TC of the DLC3 or an internal ground short in the relevant ECU is suspected.

WIRING DIAGRAM

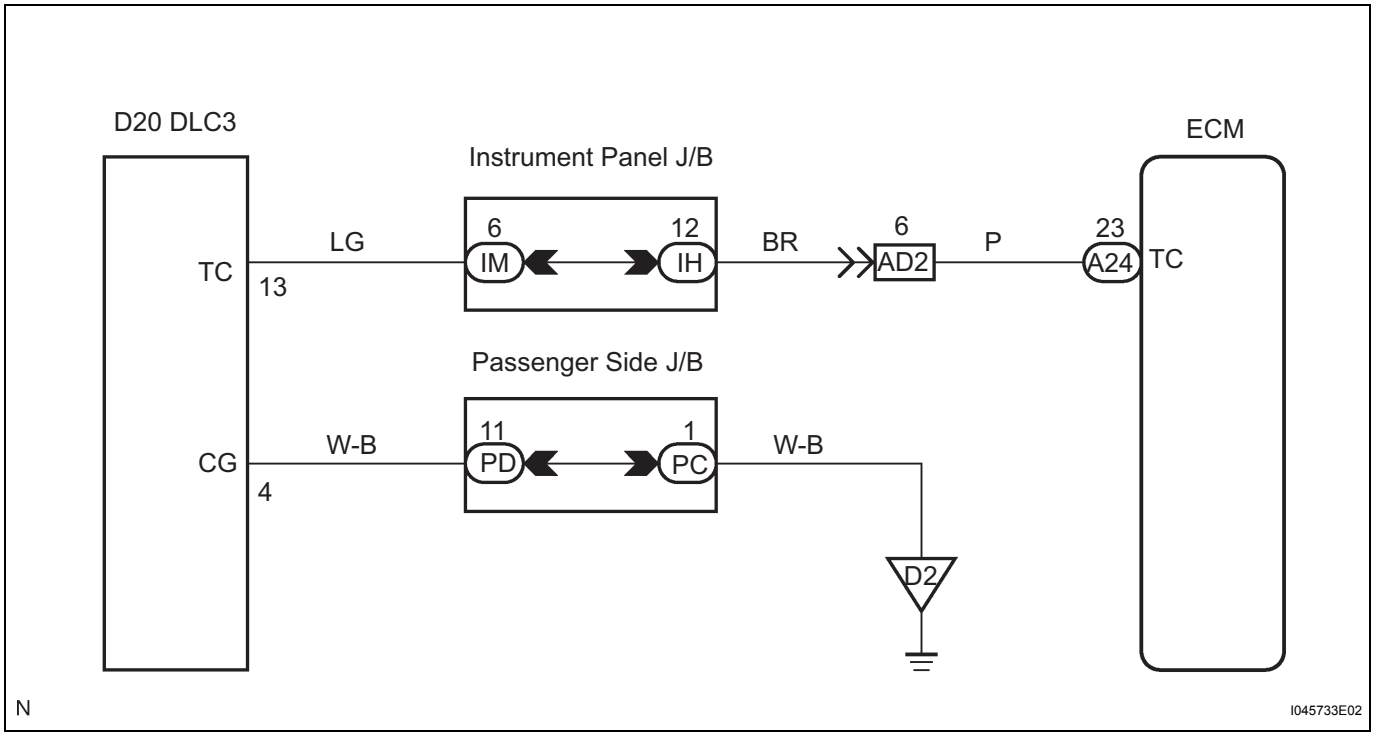

INSPECTION PROCEDURE

1	CHECK WIRE HARNESS (TC of DLC3 - ECM)

DLC3:

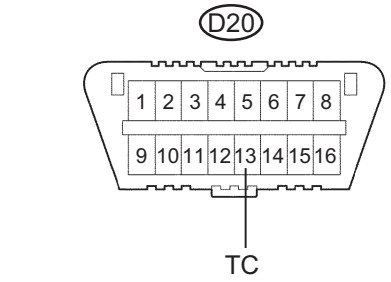

ECM Connector Wire Harness View:

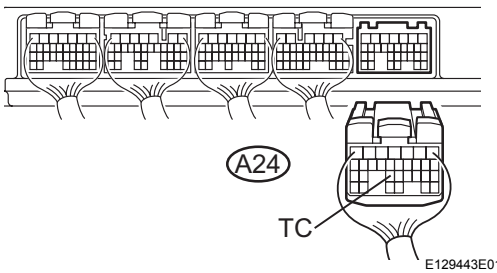

(a) Disconnect the A24 connector from the ECM.
(b) Measure the resistance according to the value(s) in the table below.

Standard resistance

Tester Connection	Condition	Specified Condition
TC (A24-23) - TC (D20 - 13)	Always	Below 1 Ω

NG → REPAIR OR REPLACE HARNESS OR CONNECTOR (DLC3 - ECM)

OK

2	CHECK WIRE HARNESS (CG of DLC3 - BODY GROUND)

DLC3:

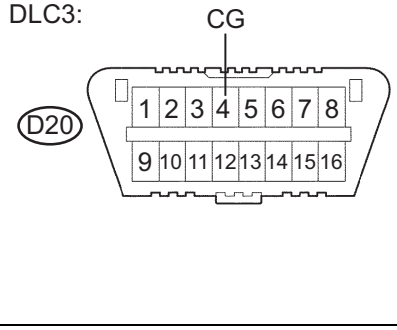

(a) Measure the resistance according to the value(s) in the table below.

Standard resistance

Tester Connection	Condition	Specified Condition
D20-4 (CG) - Body ground	Always	Below 1 Ω

NG → REPAIR OR REPLACE HARNESS OR CONNECTOR (DLC3 - BODY GROUND)

OK

3	CHECK WIRE HARNESS (TC of DLC3 - BODY GROUND)

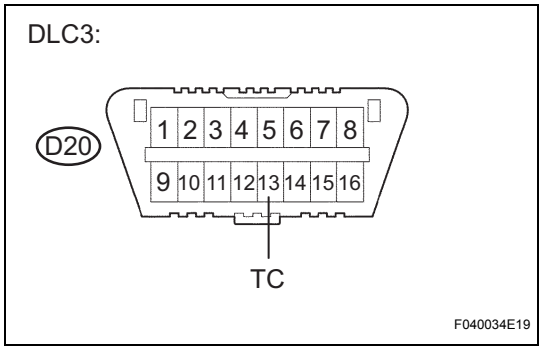

(a) Measure the resistance according to the value(s) in the table below.

Standard resistance

Tester Connection	Condition	Specified Condition
D20-13 (TC) - Body ground	Always	10 kΩ or higher

NG → **REPAIR OR REPLACE WIRE HARNESS OR ECU**

OK

REPLACE ECM

CC

CRUISE CONTROL MAIN SWITCH

COMPONENTS

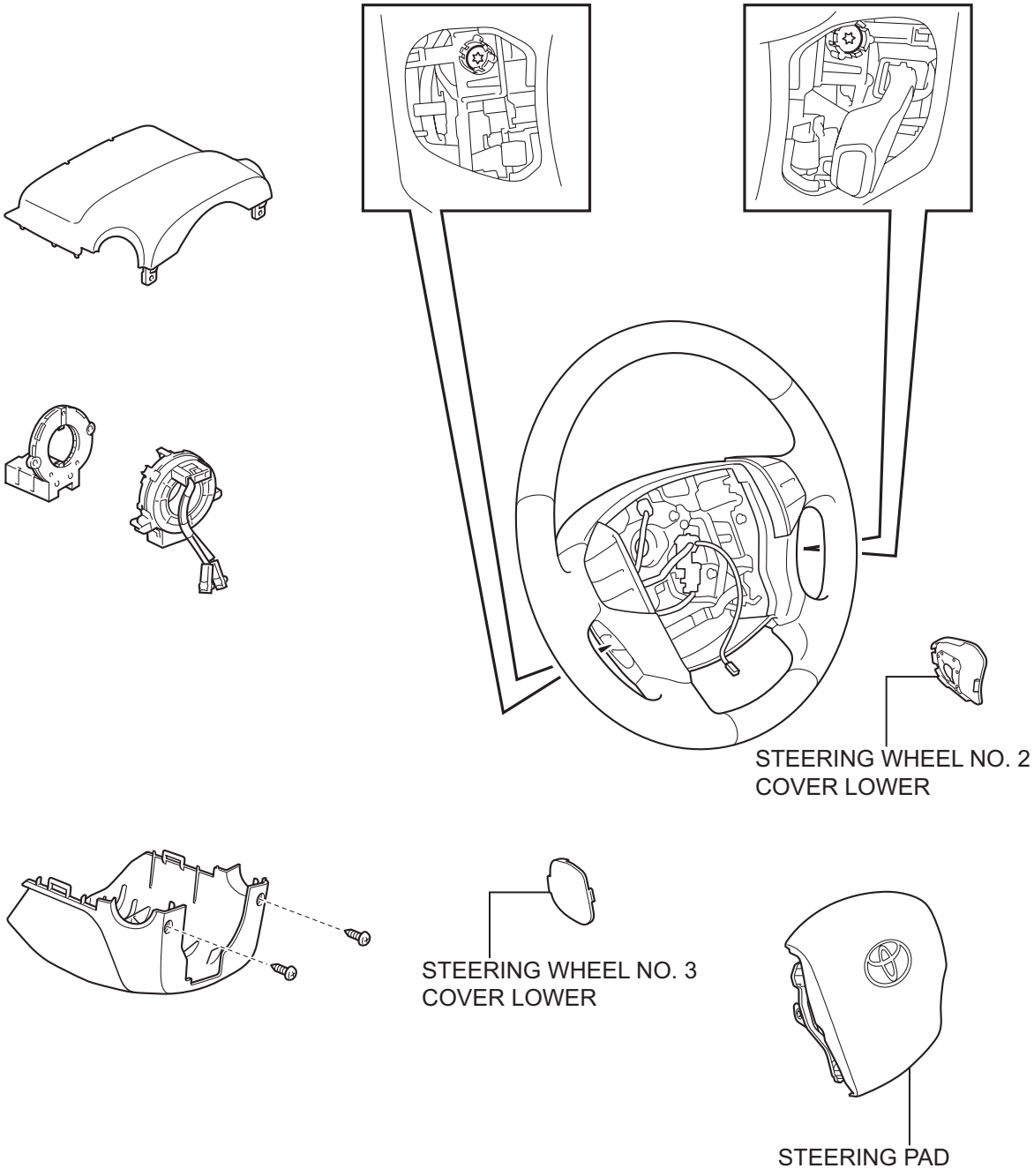

C

C114921E06

CC

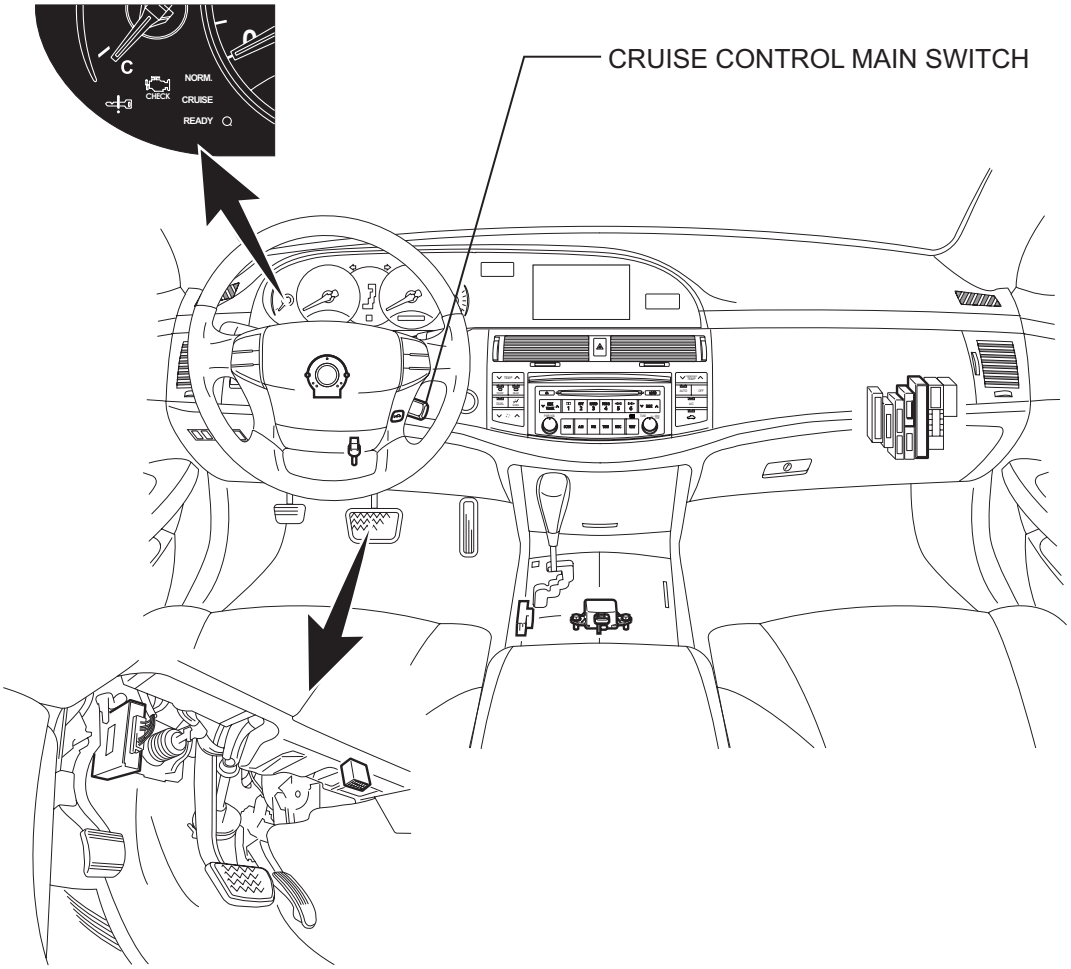

C

E112673E09

REMOVAL

1. **DISCONNECT CABLE FROM NEGATIVE BATTERY TERMINAL**
   CAUTION:
   Wait for 90 seconds after disconnecting the cable to prevent the airbag working (See page RS-1).
2. **REMOVE STEERING WHEEL NO. 3 COVER LOWER (See page RS-304)**
3. **REMOVE STEERING WHEEL NO. 2 COVER LOWER (See page RS-304)**
4. **REMOVE STEERING PAD (See page RS-304)**
5. **REMOVE CRUISE CONTROL MAIN SWITCH**
   (a) Disconnect the connector.
   (b) Remove the 2 screws.

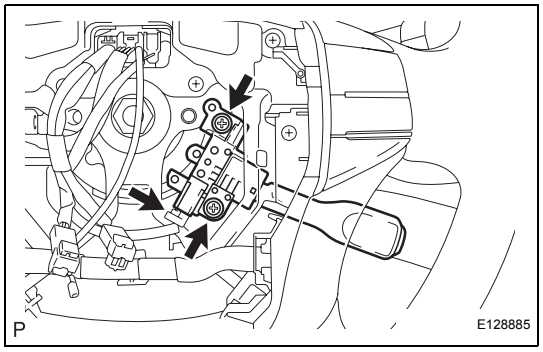

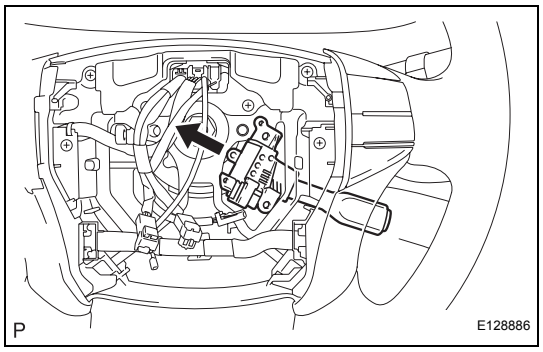

(c) Pull out the cruise control main switch assembly in the direction shown by the arrow in the illustration.

INSTALLATION

1. **INSTALL CRUISE CONTROL MAIN SWITCH**
   (a) Install the cruise control main switch assembly with the 2 screws.
   Torque: 2.35 N*m (24 kgf*cm, 21 in.*lbf)
   (b) Connect the connector.
2. **INSTALL STEERING PAD (See page RS-305)**
3. **CONNECT CABLE TO NEGATIVE BATTERY TERMINAL**
4. **PERFORM INITIALIZATION**
   NOTICE:
   Some systems need initialization when disconnecting the cable from the negative battery terminal (See page IN-29).
5. **INSPECT STEERING PAD (See page RS-305)**
6. **INSPECT SRS WARNING LIGHT**
   (See page RS-37)

DISTANCE CONTROL ECU

COMPONENTS

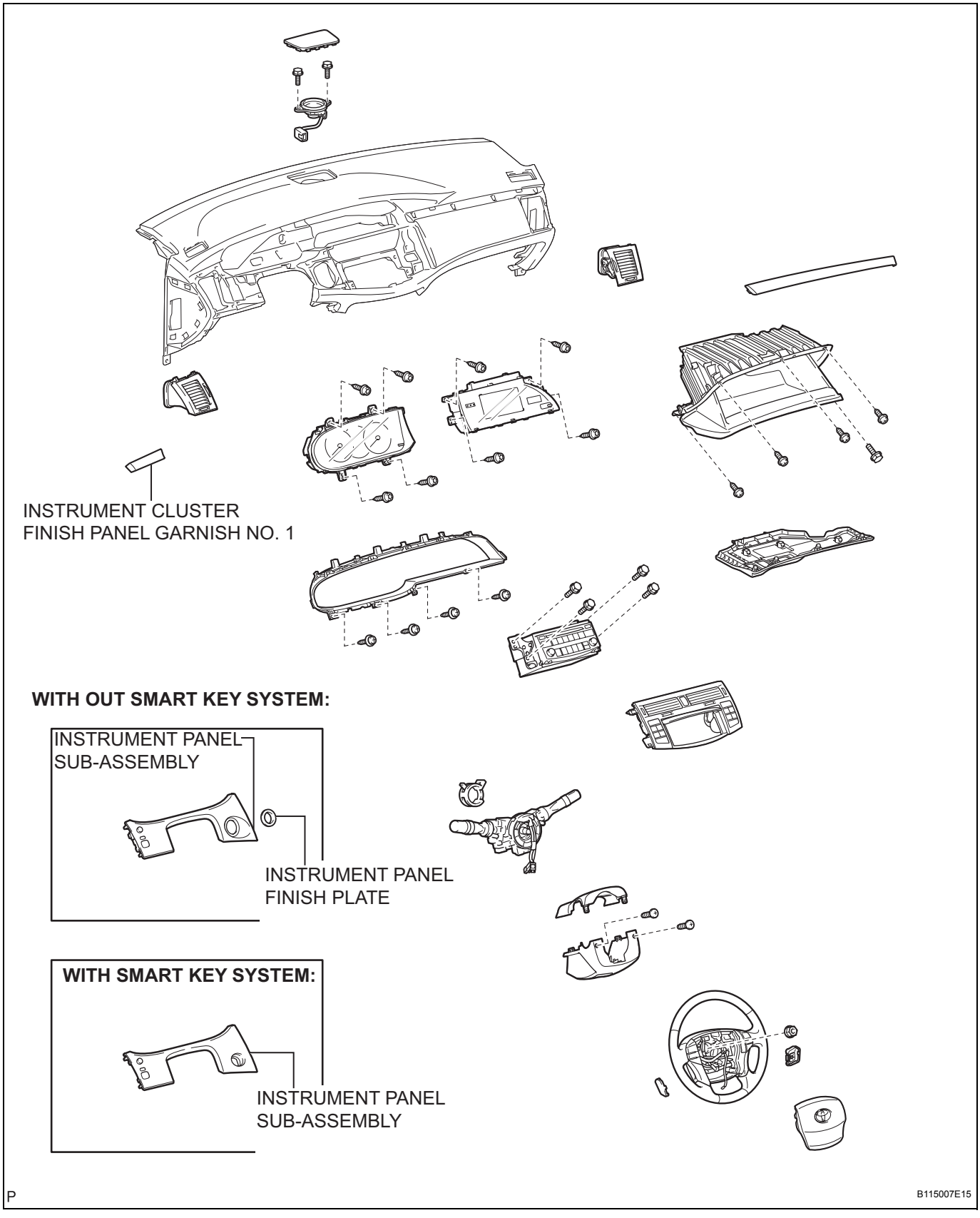

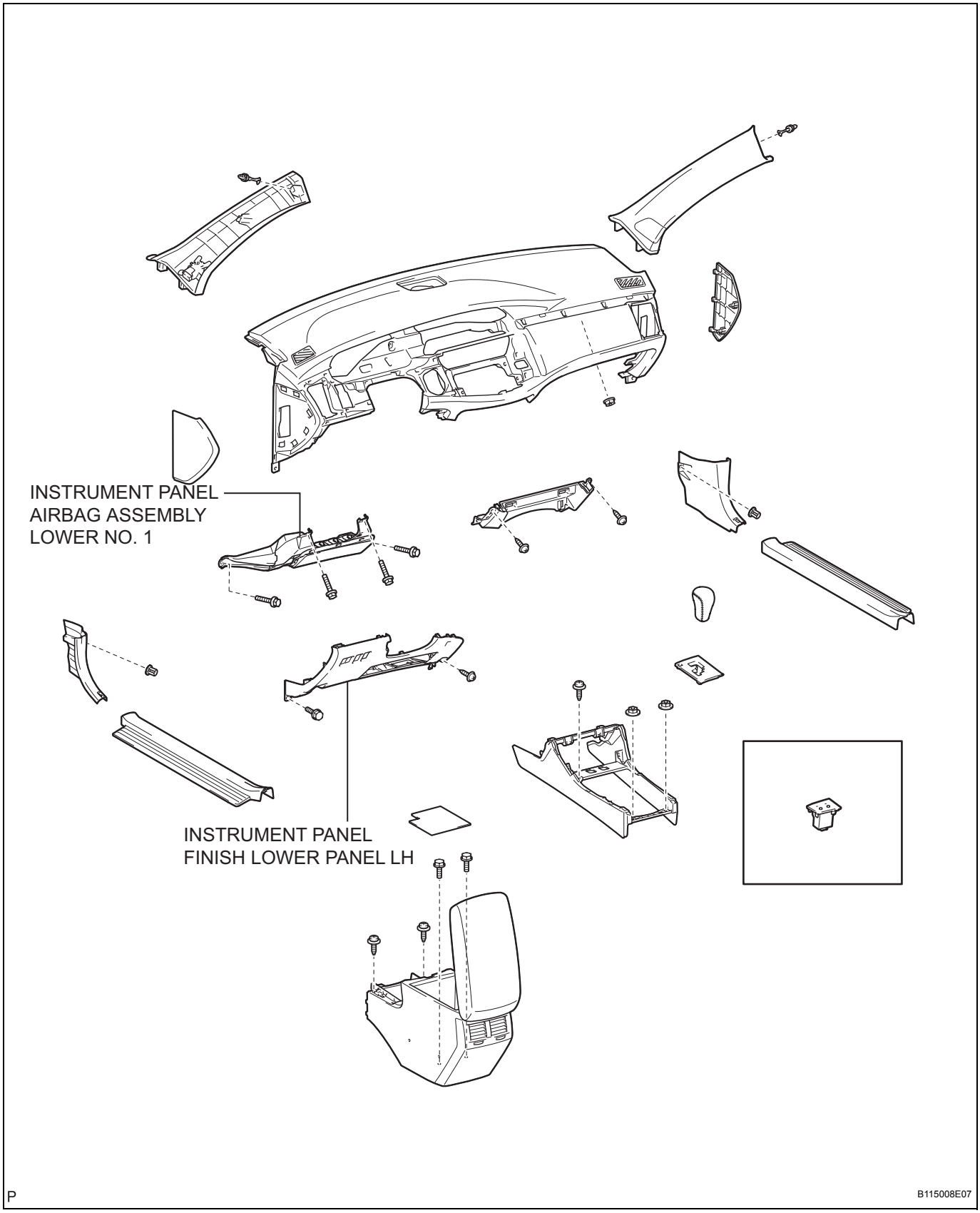
INSTRUMENT PANEL
AIRBAG ASSEMBLY
LOWER NO. 1
INSTRUMENT PANEL
FINISH LOWER PANEL LH
P
B115008E07

CC

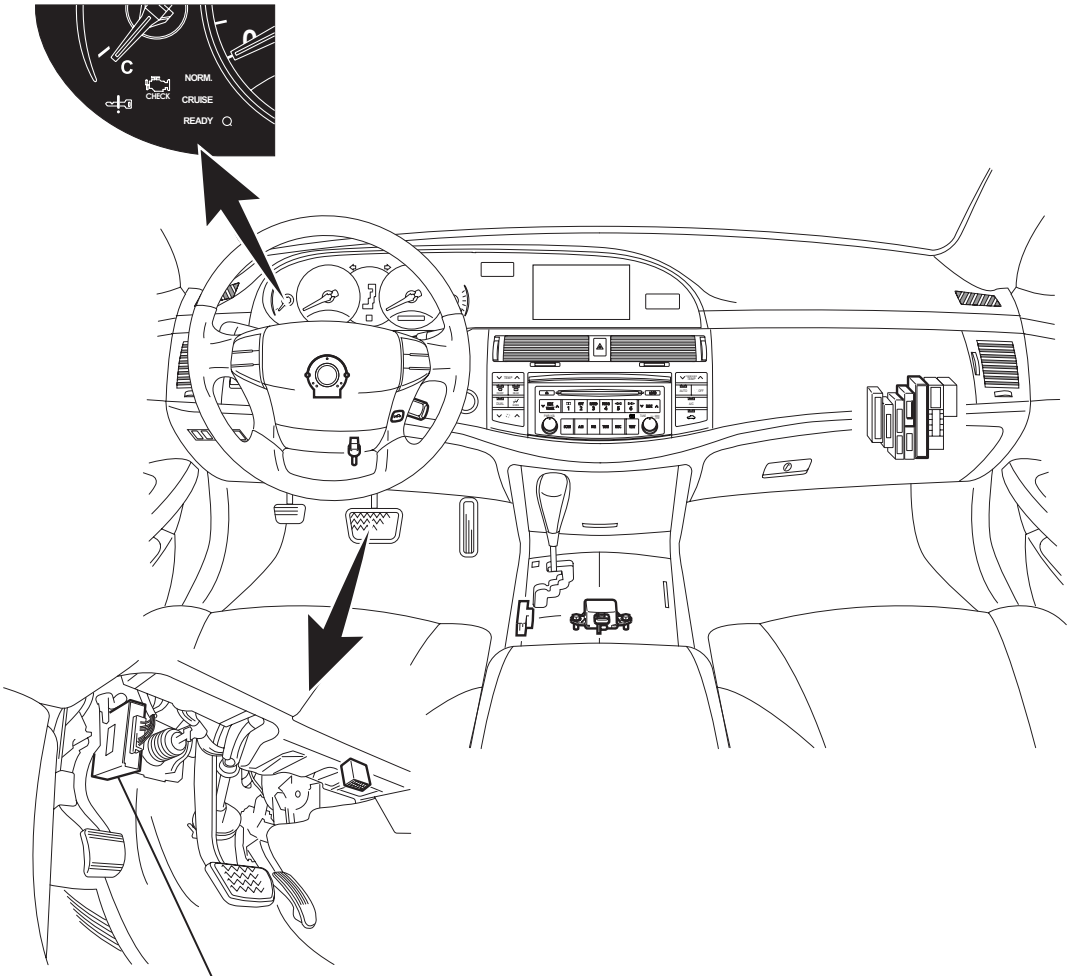

C

E112673E10

REMOVAL

1. **DISCONNECT CABLE FROM NEGATIVE BATTERY TERMINAL**
   CAUTION:
   Wait for 90 seconds after disconnecting the cable to prevent the airbag working (See page RS-1).
2. **REMOVE INSTRUMENT CLUSTER FINISH PANEL GARNISH NO. 1 (See page IP-9)**
3. **REMOVE INSTRUMENT PANEL FINISH PLATE (See page IP-9)**
4. **REMOVE INSTRUMENT PANEL SUB-ASSEMBLY (See page IP-9)**
5. **REMOVE INSTRUMENT PANEL FINISH LOWER PANEL LH (See page IP-12)**
6. **REMOVE INSTRUMENT PANEL AIRBAG ASSEMBLY LOWER NO. 1 (See page RS-320)**
7. **REMOVE DISTANCE CONTROL ECU ASSEMBLY**
   (a) Disconnect the connector.
   (b) Remove the bolt and the distance control ECU assembly.

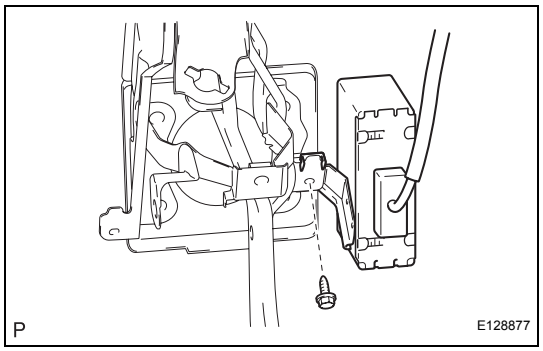

INSTALLATION

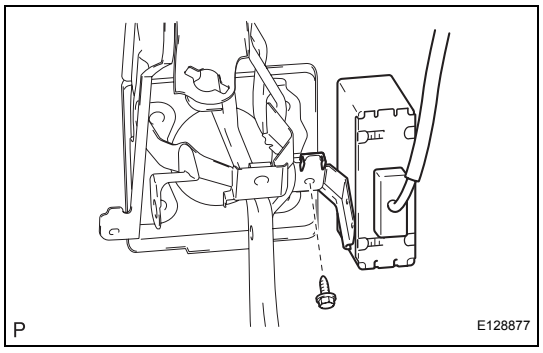

1. **INSTALL DISTANCE CONTROL ECU ASSEMBLY**
   (a) Install the bolt.
   Torque: 5.0 N*m (51 kgf*cm, 44 in.*lbf)
   (b) Connect the connector.
2. **INSTALL INSTRUMENT PANEL AIRBAG ASSEMBLY LOWER NO. 1 (See page RS-330)**
3. **CONNECT CABLE TO NEGATIVE BATTERY TERMINAL**
4. **PERFORM INITIALIZATION**
   NOTICE:
   Some systems need initialization when disconnecting the cable from the negative battery terminal (See page IN-29).
5. **INSPECT SRS WARNING LIGHT**
   (See page RS-37)

LASER SENSOR

COMPONENTS

CC

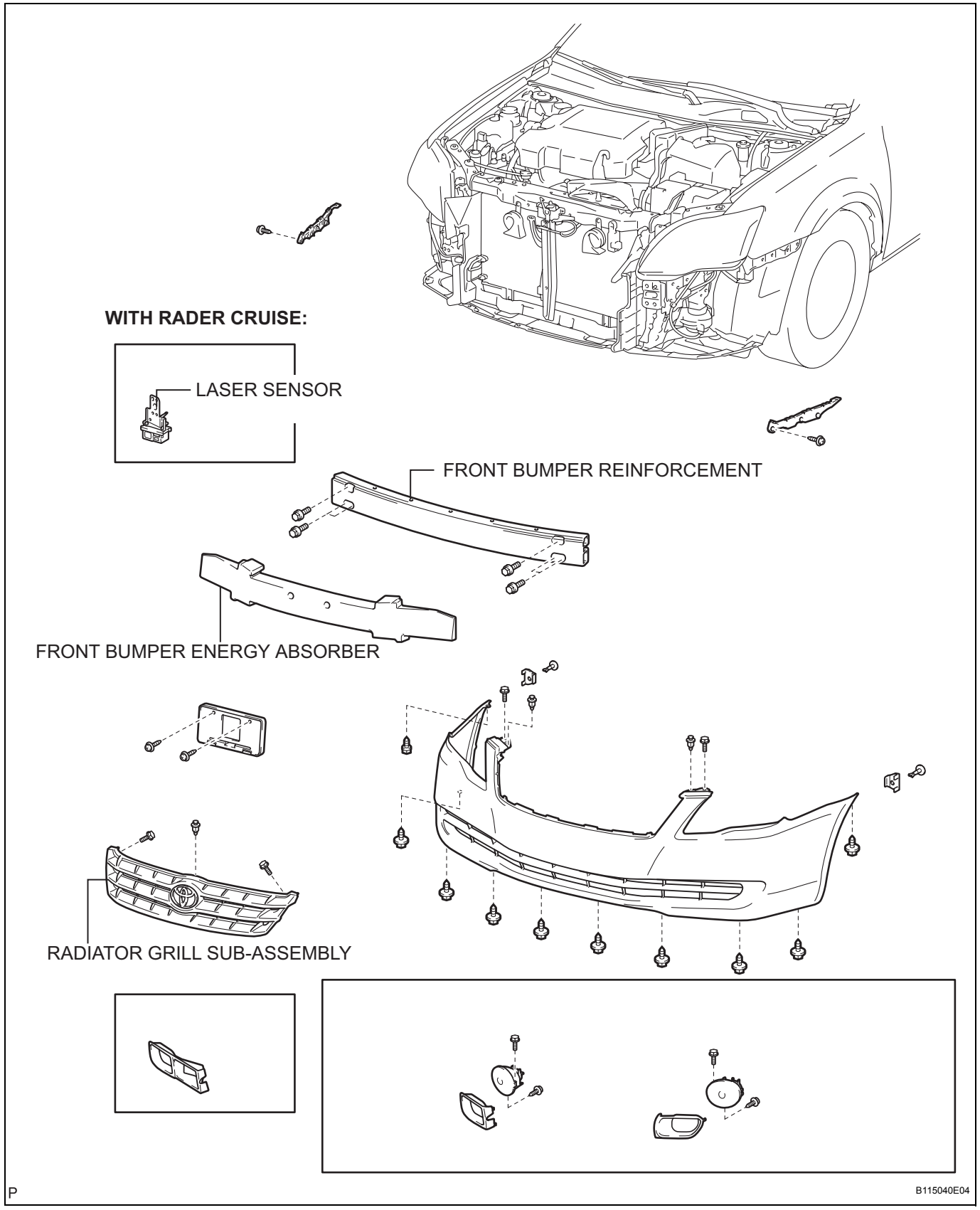

REMOVAL

1. **REMOVE RADIATOR GRILL SUB-ASSEMBLY (See page ET-2)**
2. **REMOVE FRONT BUMPER ASSEMBLY (See page ET-2)**
3. **REMOVE FRONT BUMPER ENERGY ABSORBER (See page ET-3)**
4. **REMOVE FRONT BUMPER REINFORCEMENT (See page ET-3)**
5. **REMOVE LASER SENSOR**
   (a) Disengage the clamp, then remove the laser sensor.

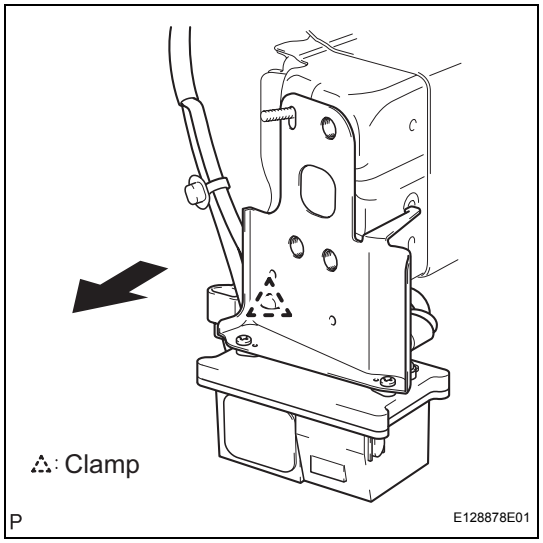

CC

CC

ADJUSTMENT

CAUTION:

- **Do not stare at the luminous portion of the laser during adjustment. The intensity of the laser light is low, but it may result in loss of sight.**
- **If the operation is not carried out as specified, there may be a risk of exposure to hazardous radiation.**

HINT:

- If replacing the ECM of the vehicle with laser cruise control with a new one, perform procedure (*1) to (*5) in step "A" so that the ECM recognizes that the vehicle is equipped with laser cruise control.
- There is a limitation on laser beam axis adjustment.
- Since the laser sensor is installed in the bumper reinforcement, it is important that the laser sensor, bumper reinforcement, and other related parts are installed properly.
- When the sensor is removed from the vehicle for trouble diagnosis or repair, it is necessary to adjust the laser beam axis after the operation.

1. ADJUST LASER SENSOR

NOTICE:

- **Perform measurement indoors on a level ground and in front of a blank wall. Park the vehicle at least 9 m 29.53 ft) from the wall. When performing adjustment outdoors, make sure that it is not raining or snowing.**
- **Check that there are no reflective materials in the surroundings or on the ground.**
- **If it is impossible to secure a distance of approximately 9 m (29.53 ft) in front of the vehicle, be sure to secure at least 7 m(22.97 ft) from the vehicle, and cover the area marked [A] with a black cloth. If not covered with a black cloth, the laser sensor may detect something other than the target and it will fail to adjust properly.**

(a) Preparation for adjusting the laser beam axis

(1) Adjust the tire pressure properly.
(See page TW-2)

(2) Luggage in the vehicle, such as in the trunk, should be unloaded.

(3) Clean the light-luminous and light-receiving portions of the laser sensor.

(4) Prepare a 10 m (32.81 ft) string, a string with a sharp-pointed weight (plumb bob), and a 5 m (16.41 ft) tape measure.

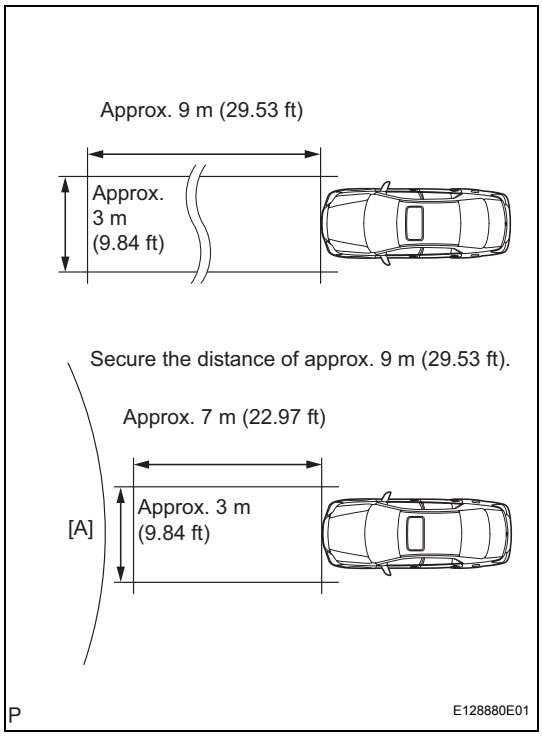

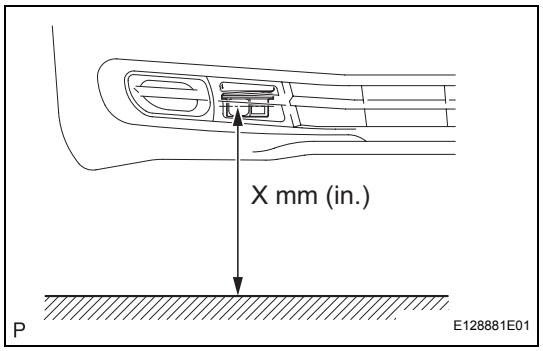

(b) Reflector (SST) placement

(1) Measure the height to the center of the laser luminous portion.

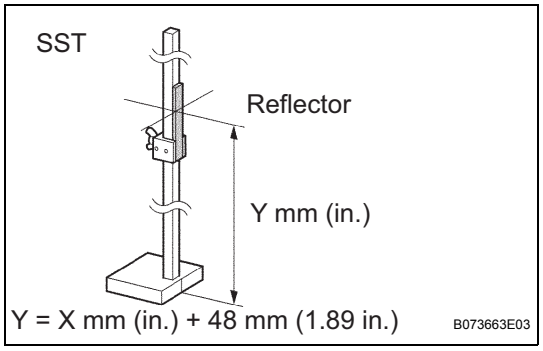

(2) Adjust the center height of the reflector 48mm(1.89 in.) higher than the center of the luminous portion.
SST 09870-60000 (09870-60010, 09870-60020)
NOTICE:
Adjust it as precise as possible.

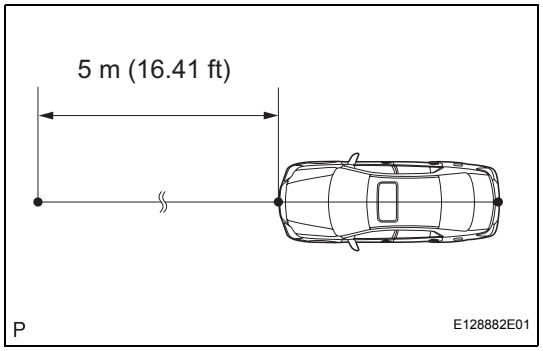

(3) From the center (center of the emblem) of the front and rear bumpers, hang down the string with the plumb bob and mark the center points (both front and rear) of the vehicle on the ground.

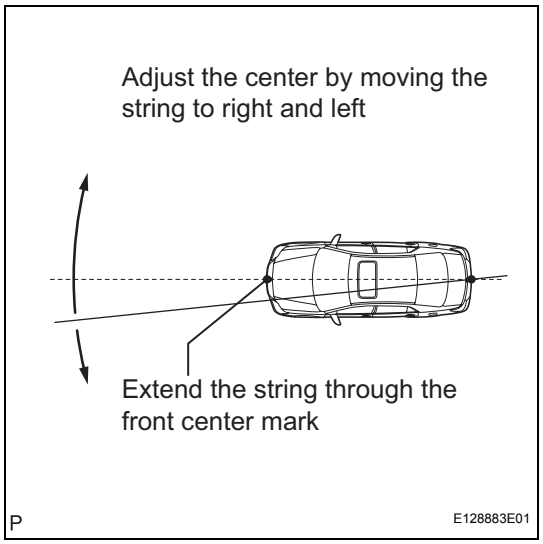

(4) Extend the 10m string from the rear center mark forward through the front center mark. Make a mark 5 m (16.41 ft) forward of the front marked point.
HINT:
Fix one end of the string to the rear center mark and move the other end right and left at a point 5 m (16.41 ft) from the front of the vehicle. Make a 5 m (16.41 ft) mark when the string and the front vehicle center mark intersect.

(5) From the 5 m (16.41 ft) marked position, measure 471 mm (18.54 in.) to the right and place the reflector there.
NOTICE:
Perform it as precise as possible.

CC

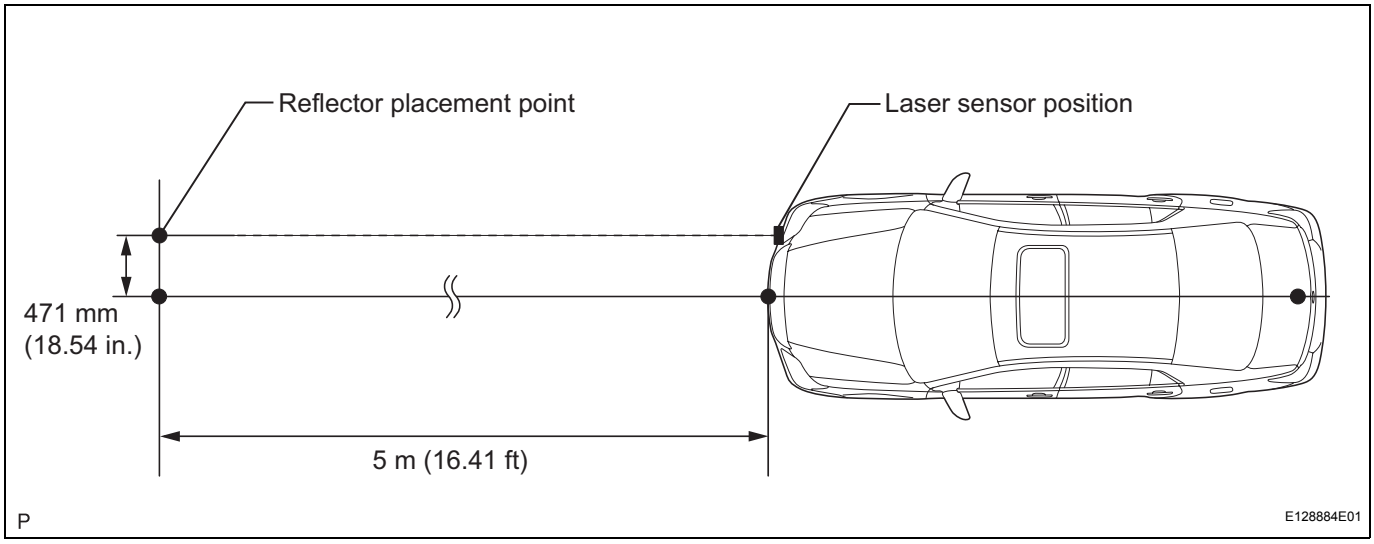

(c) Adjust the laser beam axis (step "A")
  (1) Turn the ignition switch on (IG) (*1).
  (2) Push the cruise control main switch button on (*2).
  (3) Connect the intelligent tester to the DLC3, and turn the power on (*3).

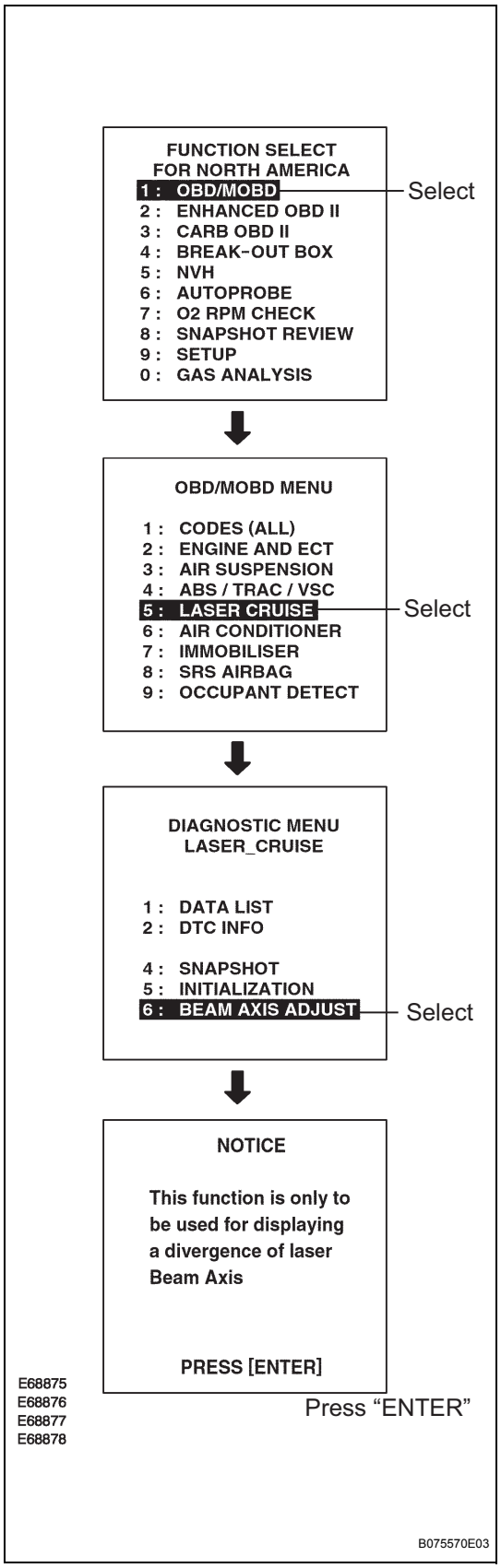

(4) Operate by following the screen menu and select "BEAM AXIS ADJUST" of the Laser Cruise Control, then press the "ENTER" key (*4).
HINT:
- Pressing the "ENTER" key will make the ECM transfer to BEAM AXIS ADJUSTMENT MODE.
- The buzzer sounds for 1 second after transfer.

CC

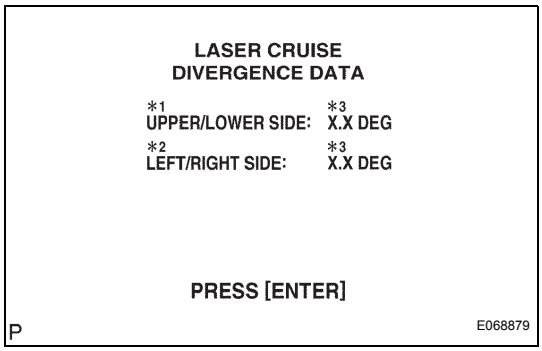

(5) Confirm the current value of the laser beam (The default reading is 6.3° when the reflector position is out of range.) (*5).

CC

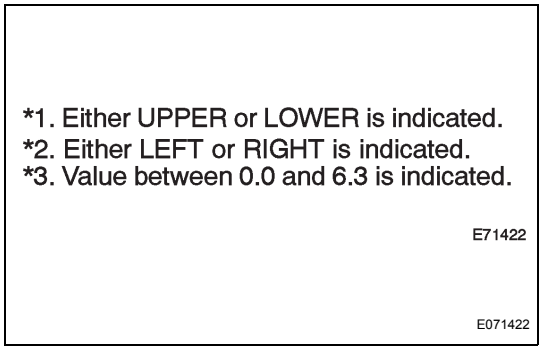

(6) Move the reflector either right or left by 100 mm (3.94 in.) and check that the value changes.
NOTICE:
When the values do not change, it is possible that the direction of the laser radar sensor is greatly off target, and that the laser radar sensor is aiming at something different. Check the installation condition of the laser radar sensor.

(7) Return the reflector to the original position and read the current angle.
Standard

Display	Angle
UPPER/LOWER SIDE	Below 2°
RIGHT/LEFT SIDE	Below 4°

HINT:
When the values displayed on the screen are normal, the values should be within the above standard value ranges. If any value is out of the range, check the installation condition of the bumper reinforcement, etc. as it cannot be adjusted automatically.

(8) Turn the headlight dimmer switch to the TAIL position.

(9) Beam axis adjustment will be performed automatically.

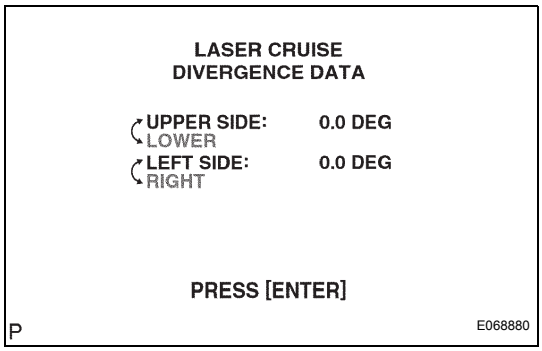

(10) When the adjustment is completed, the UPPER/ LOWER SIDE and RIGHT/LEFT SIDE indicators show 0 and the system beeps for 10 seconds. During this time, UPPER and LOWER flash alternately on the screen, and LEFT and RIGHT flash alternately on the screen.
NOTICE:
Adjustment values are calculated and then stored in the laser sensor. As the system is not controlled mechanically, the same value as before is displayed to adjust the beam axis.

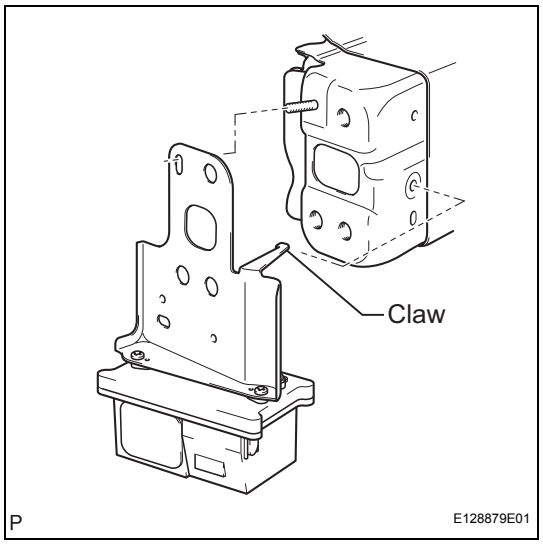

INSTALLATION

1. **INSTALL LASER SENSOR**
   (a) Install the laser sensor so that the claw contacts the flat surface around the hole on the front bumper mounting reinforcement.
   NOTICE:
   Do not insert the claw into the hole on the front bumper mounting reinforcement.
   (b) Engage the clamp.
2. **INSTALL FRONT BUMPER REINFORCEMENT (See page ET-4)**

POWER DOOR LOCK CONTROL SYSTEM

PRECAUTION

NOTICE:
When disconnecting the negative (-) battery terminal, initialize the following system(s) after the terminal is reconnected.

System Name	See Procedure
Power Window Control System	IN-29
Sliding Roof System	

1. EXPRESSIONS OF IGNITION SWITCH

(a) The type of ignition switch used on this model differs according to the specifications of the vehicle. The expressions listed in the table below are used in this section.

DL

Switch Type		Ignition Switch (position)	Engine Switch (condition)
Expression	Ignition Switch off	LOCK	Off
	Ignition Switch on (IG)	ON	On (IG)
	Ignition Switch on (ACC)	ACC	On (ACC)
	Engine Start	START	Start

HOW TO PROCEED WITH TROUBLESHOOTING

HINT:

- Use this procedure to troubleshoot the power door lock system.
- The intelligent tester should be used in steps 4 and 6.

1	VEHICLE BROUGHT TO WORKSHOP

NEXT

2	CUSTOMER PROBLEM ANALYSIS CHECK AND SYMPTOM CHECK

HINT:

See page IN-36.

NEXT

3	PROBLEM SYMPTOMS TABLE

(a) If the fault is not listed on the problem symptoms table, proceed to A.

(b) If the fault is listed on the problem symptoms table, proceed to B.

B	Go to step 5

A

4	OVERALL ANALYSIS AND TROUBLESHOOTING

(a) DATA LIST / ACTIVE TEST (See page DL-11).
  (1) Inspection with the intelligent tester (DATA LIST).
  (2) Inspection with the intelligent tester (ACTIVE TEST).

(b) Terminals of ECU (See page DL-9).

(c) On-vehicle inspection (See page DL-12).

NEXT

5	ADJUST, REPAIR OR REPLACE

NEXT

6	**CONFIRMATION TEST**

NEXT

END

PARTS LOCATION

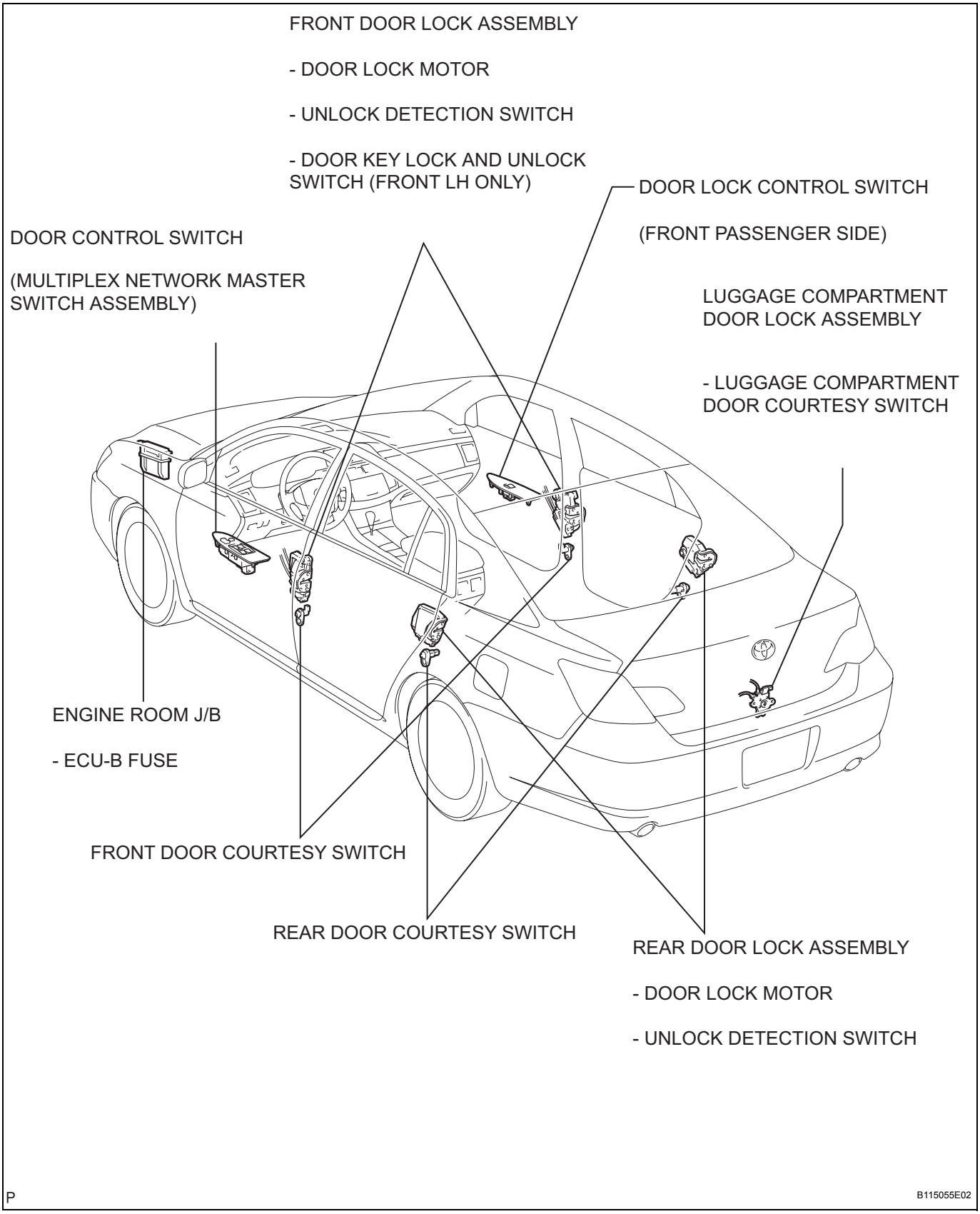

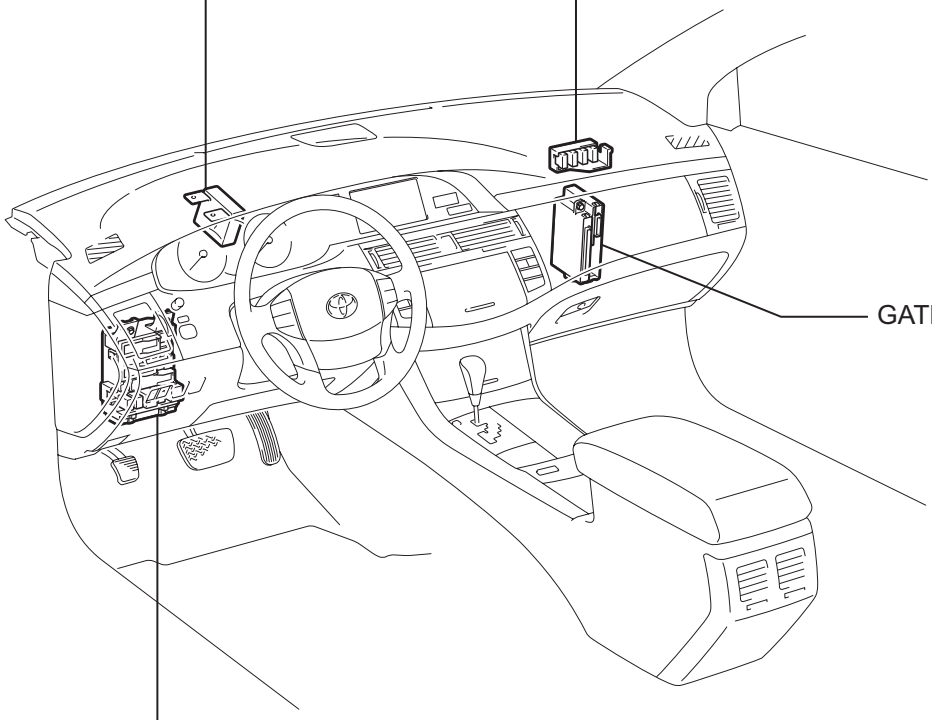

INSTRUMENT PANEL J/B

- BODY ECU
- ECU-ACC FUSE
- ECU-IG FUSE
- IG1 RELAY
- ACC RELAY

P

B115021E01

SYSTEM DIAGRAM

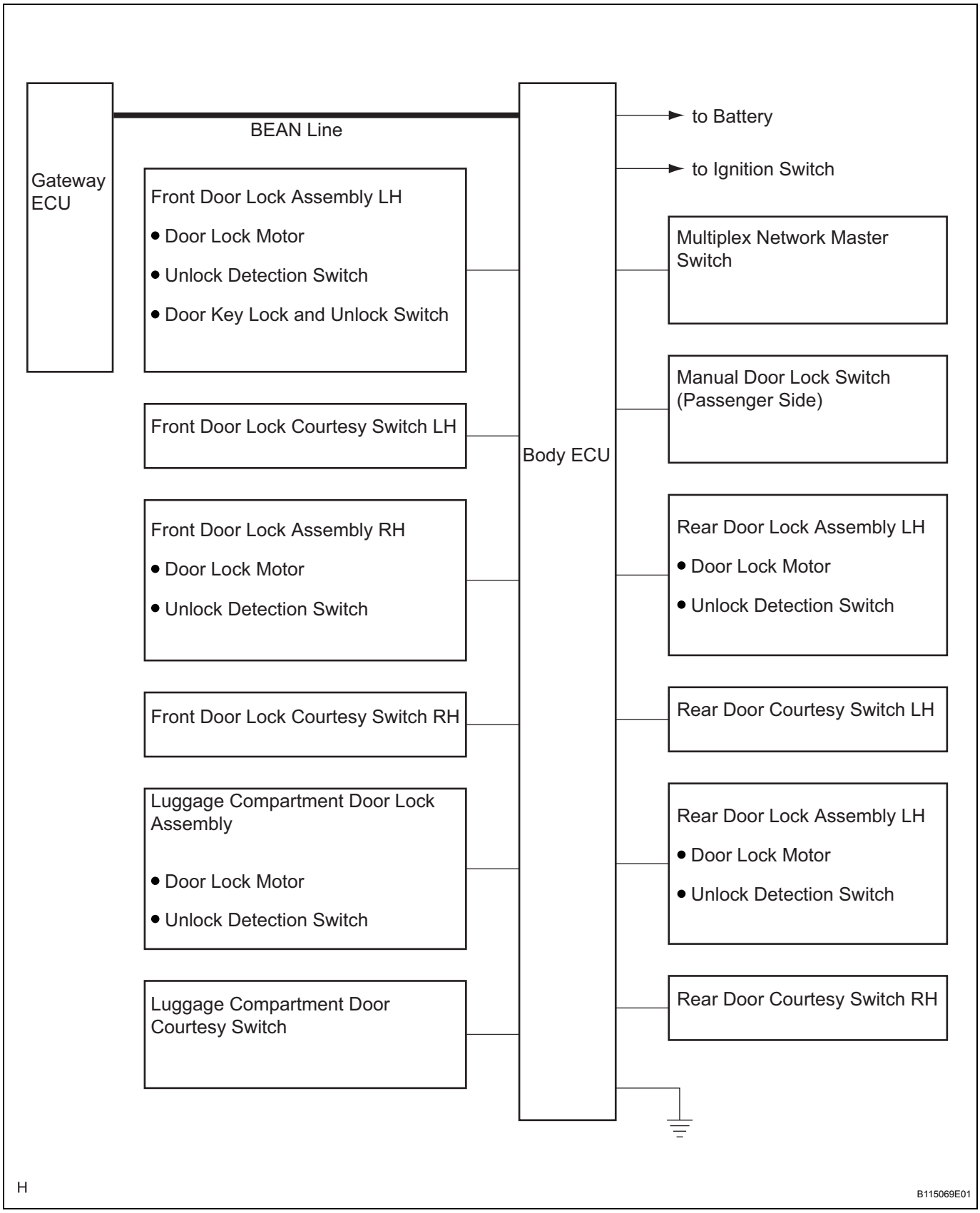

SYSTEM DESCRIPTION

1. POWER DOOR LOCK SYSTEM DESCRIPTION

(a) The power door lock system locks/unlocks all doors with a one-touch operation.
- The door control switch of the master switch assembly on the driver's door and the driver's door key cylinder send lock/unlock request signals to each door lock motor assembly through the body ECU.
- The door control switch on the passenger door sends lock/unlock request signals to each door lock motor assembly through the body ECU.

(b) Components

Components	Function
Power window regulator master switch assembly	Door control switch on master switch assembly locks/unlocks all doors.
Door lock control switch	Locks/unlocks all doors.
Door courtesy switch	Placed on each door. Detects door status (open or closed) and outputs data to body ECU. Turns on when door is open and off when door is closed.
Front door lock assembly (Driver side)	• Built-in motor locks/unlocks door. • Built-in door control switch (key-linked) detects door key operation's door status (locked or unlocked) and outputs data to body ECU. • Built-in position switch detects door status (locked or unlocked) and outputs data to body ECU. This switch turns off when door is locked and on when door is unlocked.
Luggage compartment door lock assembly	Built-in courtesy switch detects door status (open or closed) and outputs data to body ECU. This switch turns on when door is open and off when door is closed.
Door lock assembly (Passenger, RL and RR side)	• Built-in motor locks/unlocks door. • Built-in position switch detects door status (locked or unlocked) and outputs data to body ECU. This switch turns off when door is locked and on when door is unlocked.

(c) Functions

Functions	Outlines
Manual lock and unlock *1	This function can lock or unlock all doors by the door lock control switch operation.
One-motion open *1	When the door is locked, this function enables the door to be unlocked by merely pulling the inside handle of the door.
Key-linked lock *2	This function, which is linked with the key cylinder, can lock all the doors when a lock operations is effected.
Key-lined unlock *2	This function, which is linked with the key cylinder, can lock all the doors when an unlock operation effected.
Key-linked 2-step unlock *2	This function is provided to unlock the driver's door by turning the key cylinder first step and to unlock all doors by turning it the second step. However, the second step must be performed within three seconds.
Prevention of key confinement *1	When the key is inserted in the ignition key cylinder with the driver's door open and any front door is locked (with the door lock knob, door lock control switch, or door key cylinder), after locking the door is automatically unlocked.
Manual unlock prohibition *1	When a lock operation is effected through transmitter or key-linked operation, this function prohibits the door lock control switch from becoming unlocked.
Shift-linked automatic door lock	When the conditions listed below are met consecutively, this function causes all the doors to be automatically locked. • The power source is changed from the "OFF" or "ACC" to the "IG-ON". • All doors are closed. • The shift lever is moved out of P position. • Any of the doors are unlocked.

Functions	Outlines
Speed-sensitive automatic door lock	When the conditions listed below are met consecutively, this function causes all the doors to be automatically locked. • Vehicle speed is higher than approximately 20 km/h (13 mph). • All doors are closed. • The shift lever is out of P or N position. • Any of the doors are unlocked.
Shift-linked automatic door unlock	When the power source is "IG-ON", by shifting the shift lever to P position from the position other than P position, all doors will be automatically unlocked.
Opening driver's door-linked automatic door unlock	All doors are unlocked automatically when the driver's door is opened within ten seconds after the power source is changed from "IG-ON" to the "ACC" or "OFF".

*1: Only for driver and front passenger doors

*2: Only for driver door

CUSTOMIZE PARAMETERS

HINT:
The following items can be customized.
NOTICE:

- **After confirming whether items requested by the customer are applicable or not for customization, perform customize operations.**
- **Be sure to record the current settings before customizing.**
- **When troubleshooting, make sure that the item in question is not set to "OFF" as a result of customization.**

1. BODY ECU (Using intelligent tester):

Display (Item)	Default	Contents	Setting
Auto Lock	OFF	Function that locks the doors once when the vehicle speed reaches a certain level.	ON/OFF
Unlk/Key Twice	ON	Functions that unlocks only driver side door when driver side door key cylinder is turned to unlock once and unlocks all the doors when it is turned to unlock twice. In OFF setting, turning it once unlocks all doors.	ON/OFF
All Unlk/Opn-Cl	ON		ON/OFF
Unlock/Park	OFF	Function that unlocks doors when lever is shifted to P position from any position other than P while the ignition switch is ON.	ON/OFF

2. MANUAL SETTING (Switch operation)

(a) Close all the doors.
(b) Turn the ignition switch on (IG).
(c) Within ten seconds after the ignition switch on (IG).

- To set function (Shift-linked Automatic Door Lock)
  Push and hold the LOCK side of the power door lock switch for five seconds with the shift lever in the P.
- To set function (Speed-sensitive Automatic Door Lock)
  Push and hold the LOCK side of the power door lock switch for five seconds with the shift lever in any position except P.
- To set function (Shift-linked Automatic Door Unlock)
  Push and hold the UNLOCK side of the power door lock switch for five seconds with the shift lever in the P.
- To set function (Opening Driver's Door-linked Automatic Door Unlock)
  Push and hold the UNLOCK side of the power door lock switch for five seconds with the shift lever in any position except P.

If user wants to cancel a function, repeat the procedure. Each time user perform the procedure, the function is set or cancelled.

PROBLEM SYMPTOMS TABLE

POWER DOOR LOCK CONTROL SYSTEM

Symptom	Suspected area	See page
All doors cannot be locked/unlocked simultaneously (door control switch)	1. Power source circuit (Body ECU)	DL-60
	2. Door lock control switch circuit (Master switch)	DL-27
	3. Body ECU	-
All doors cannot be locked/unlocked simultaneously (driver door key cylinder)	1. Power source circuit (Body ECU)	DL-60
	2. Door lock control switch circuit (Master switch)	DL-27
	3. Door key lock and unlock switch circuit (Driver side)	DL-57
	4. Body ECU	-
Driver side door lock does not operate	1. Power source circuit (Body ECU)	DL-60
	2. Door lock motor circuit (Driver side)	DL-31
	3. Door key lock and unlock switch circuit (Driver side)	DL-57
	4. Body ECU	-
Passenger side door lock does not operate	1. Power source circuit (Body ECU)	DL-60
	2. Door lock motor circuit (Passenger side)	DL-34
	3. Body ECU	-
Rear LH side door lock does not operate	1. Power source circuit (Body ECU)	DL-60
	2. Door lock motor circuit (Rear LH side)	DL-37
	3. Body ECU	-
Rear RH side door lock does not operate	1. Power source circuit (Body ECU)	DL-60
	2. Door lock motor circuit (Rear RH side)	DL-40
	3. Body ECU	-
Key lock-in prevention function does not work properly (manual operation and key-linked lock are active)	1. Door courtesy light switch assembly (Driver side)	DL-43
	2. Door key lock and unlock switch circuit (Driver side)	DL-57
	3. Body ECU	-
On or more doors cannot be lock/unlock simultaneously (Smart key operation)	1. Troubleshooting	DL-159
	2. Door unlock detection switch circuit (Driver side)	DL-15
	3. Door unlock detection switch circuit (Front passenger side)	DL-18
	4. Door unlock detection switch circuit (Rear door LH)	DL-21
	5. Door unlock detection switch circuit (Rear door RH)	DL-24
	6. Body ECU	-
On or more doors cannot be lock/unlock simultaneously (Wireless key operation)	1. Troubleshooting	DL-76
	2. Door unlock detection switch circuit (Driver side)	DL-15
	3. Door unlock detection switch circuit (Front passenger side)	DL-18
	4. Door unlock detection switch circuit (Rear door LH)	DL-21
	5. Door unlock detection switch circuit (Rear door RH)	DL-24
	6. Body ECU	-
On or more doors cannot be lock/unlock simultaneously (Theft deterrent operation)	1. Troubleshooting	TD-9
	2. Door unlock detection switch circuit (Driver side)	DL-15
	3. Door unlock detection switch circuit (Front passenger side)	DL-18
	4. Door unlock detection switch circuit (Rear door LH)	DL-21
	5. Door unlock detection switch circuit (Rear door RH)	DL-24
	6. Body ECU	-

TERMINALS OF ECU

1. INSTRUMENT PANEL J/B (BODY ECU)

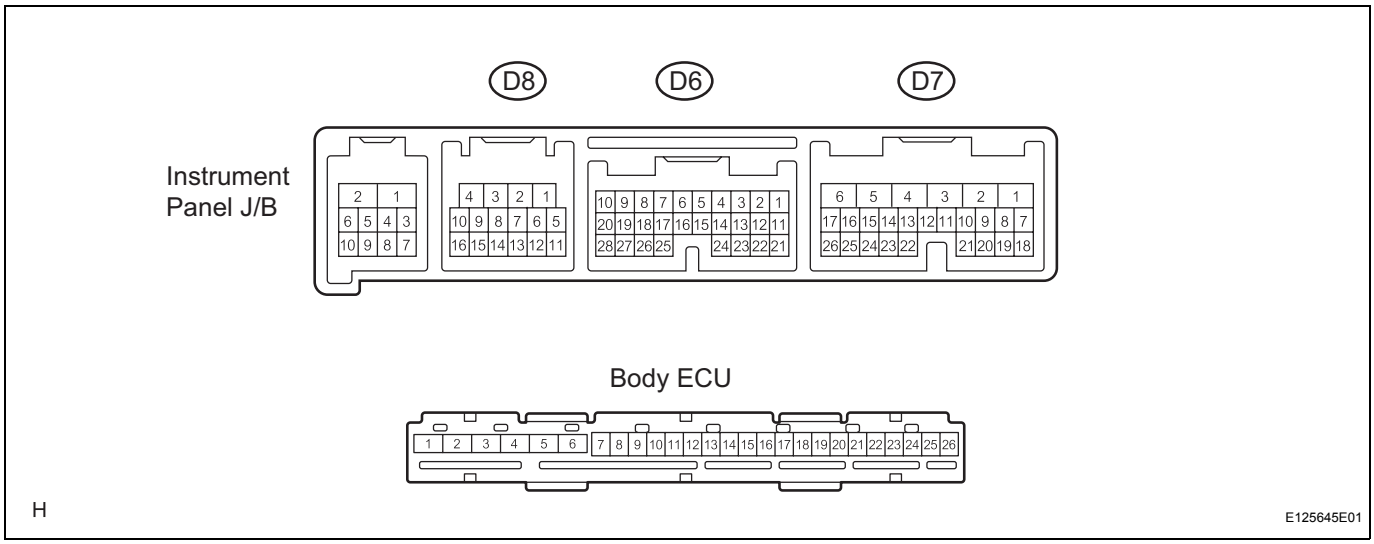

INSTRUMENT PANEL J/B:

Symbols (Terminal No.)	Wiring Color	Terminal Description	Condition	Specified Condition
LSWR (D6-5) - Body ground	B - Body ground	Rear right door lock position switch input	Door lock position switch is UNLOCK → LOCK	Below 1 V → 10 to 14 V
UL2 (D6-4) - Body ground	Y - Body ground	Passenger door key-linked door unlock input	Door key-linked is OFF → UNLOCK	10 to 14 V → Below 1 V
LSWP (D6-27) - Body ground	GR - Body ground	Passenger door lock position switch input	Door lock position switch is UNLOCK → LOCK	Below 1 V → 10 to 14 V
LGCY (D6-25) - Body ground	V - Body ground	Luggage compartment door courtesy switch input	Luggage door courtesy switch is CLOSE → OPEN	Below 1 V → 10 to 14 V
PCTY (D6-23) - Body ground	L - Body ground	Passenger door courtesy switch input	Door courtesy switch is CLOSE → OPEN	Below 1 V → 10 to 14 V
TR+ (D7-1) - Body ground	B - Body ground	Door lock motor UNLOCK drive output (Luggage compartment door)	Ignition switch on (IG), luggage door lock motor is OFF → UNLOCK	Below 1 V → 10 to 14 V
ACTD (D8-1) - Body ground	GR - Body ground	Door lock motor UNLOCK drive output (Driver door)	Ignition switch on (IG), door lock motor is OFF → UNLOCK	Below 1 V → 10 to 14 V
UL3 (D8-8) - Body ground	V - Body ground	Driver key-linked door unlock input	Door key-linked is OFF → UNLOCK	10 to 14 V → Below 1 V
LSWD (D8-7) - Body ground	L - Body ground	Driver door lock position switch input	Door lock position switch is UNLOCK → LOCK	Below 1 V → 10 to 14 V
RCTY (D8-16) - Body ground	GR - Body ground	Rear right door courtesy switch input	Door courtesy switch is CLOSE → OPEN	Below 1 V → 10 to 14 V
DCTY (D8-14) - Body ground	L - Body ground	Driver door courtesy switch input	Door courtesy switch is CLOSE → OPEN	Below 1 V → 10 to 14 V

BODY ECU:

Symbols (Terminal No.)	Wiring Color	Terminal Description	Condition	Specified Condition
ACT+ (1) - Body ground	- - Body ground	Door lock motor LOCK drive output (All door)	Ignition switch on (IG), door lock motor is OFF → LOCK	Below 1 V → 10 to 14 V
ACT- (3)- Body ground	- - Body ground	Door lock motor UNLOCK drive output (All door)	ignition switch on (IG), door lock motor is OFF → UNLOCK	Below 1 V → 10 to 14 V
GND2 (4) - Body ground	- - Body ground	Ground	Always	Below 1 V
GND1 (5) - Body ground	- - Body ground	Ground	Always	Below 1 V
L1 (9) - Body ground	- - Body ground	Door lock input	Manual door lock is OFF → LOCK	10 to 14 V → Below 1 V
L2 (10) - Body ground	- - Body ground	Driver key-linked door lock input	Driver door key-linked is OFF → LOCK	10 to 14 V → Below 1 V

DL

Symbols (Terminal No.)	Wiring Color	Terminal Description	Condition	Specified Condition
UL1 (12) - Body ground	- - Body ground	Door unlock input	Manual door lock is OFF → UNLOCK	10 to 14 V → Below 1 V
IG (15) - Body ground	- - Body ground	Power supply	Ignition switch OFF → ON	Below 1 V → 10 to 14 V
LCTY (17) - Body ground	- - Body ground	Rear left door courtesy switch input	Door courtesy switch is CLOSE → OPEN	Below 1 V → 10 to 14 V
LSWL (20) - Body ground	- - Body ground	Rear left door lock position switch input	Door lock position switch is UNLOCK → LOCK	Below 1 V → 10 to 14 V
ACC (22) - Body ground	- - Body ground	Power supply	Ignition switch OFF → ACC	Below 1 V → 10 to 14 V
BECU (26) - Body ground	- - Body ground	Power supply	Always	10 to 14 V

DIAGNOSIS SYSTEM

1. DESCRIPTION

(a) Power door lock control system data can be read in the Data Link Connector 3 (DLC3) of the vehicle. When the system seems to be malfunctioning, use the intelligent tester to check for malfunctions and perform repairs.

2. CHECK DLC3

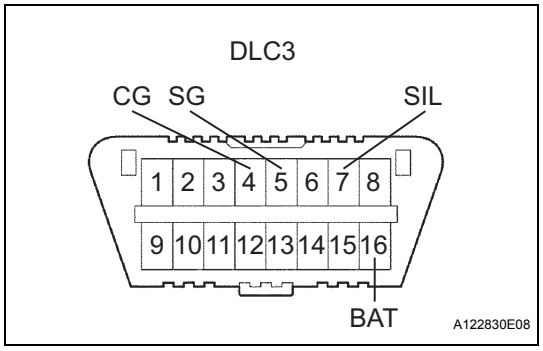

(a) The vehicle's ECM uses ISO 9141-2 for communication.
The terminal arrangement of the DLC3 complies with SAE J1962 and matches the ISO 9141-2 format.

Tester Connection	Condition	Specified Condition
7 (Bus + line) - 5 (Signal ground)	During communication	Pulse generation
4 (Chassis ground) - Body ground	Constant	Below 1 Ω
5 (Signal ground) - Body ground	Constant	Below 1 Ω
16 (B+) - Body ground	Constant	9 to 14 V

HINT:
Connect the cable of the intelligent tester to the DLC3, turned the ignition switch ON and attempt to use the intelligent tester. If the screen displays UNABLE TO CONNECT TO VEHICLE, a problem exists in the vehicle side or tester side.

- If communication is normal when the tester is connected to another vehicle, inspect the DLC3 of the original vehicle.
- If communication is still impossible when the tester is connected to another vehicle, the problem is probably in the tester itself. Consult the Service Department listed in the tester's manual.

(b) Check the battery voltage.

3. INSPECT BATTERY VOLTAGE

(a) Inspect the battery voltage.
Voltage:
11 to 14 V
If voltage is below 11 V, recharge the battery before proceeding.

DL

DATA LIST / ACTIVE TEST

1. DATA LIST

HINT:

Using the intelligent tester's DATA LIST allows switch, sensor, actuator and other item values to be read without removing any parts. Reading the DATA LIST early in troubleshooting is one way to save time.

(a) Connect the intelligent tester (with CAN VIM) to the DLC3.

(b) Turn the ignition switch on (IG).

(c) Read the DATA LIST on the tester's screen.

Body ECU:

Item	Measurement Item/Display (Range)	Normal Condition	Diagnostic Note
TRUNK KEY UNLK	Trunk key switch signal/ON or OFF	ON: Trunk is unlocked OFF: Trunk is locked	-
LUGG COURTESY SW	Luggage courtesy switch signal/ ON or OFF	ON: Luggage courtesy switch is open OFF: Luggage courtesy switch is closed	-
D DOR CTY SW	Door courtesy switch signal/ON or OFF	ON: Door is open OFF: Door is closed	-
P DOR CTY SW	Door courtesy switch signal/ON or OFF	ON: Door is open OFF: Door is closed	-
Rr DOR CTY SW	Door courtesy switch signal/ON or OFF	ON: Door is open OFF: Door is closed	-
Dr LOCK POS SW	Door unlock detection switch signal/ON or OFF	ON: Door is unlocked OFF: Door is locked	-
P LOCK POS SW	Door unlock detection switch signal/ON or OFF	ON: Door is unlocked OFF: Door is locked	-
Rr LOCK POS SW	Door unlock detection switch signal/ON or OFF	ON: Door is unlocked OFF: Door is locked	-
D/L SW-LOCK	Door lock switch signal (LOCK)/ ON or OFF	ON: Door is locked OFF: Door is unlocked	-
D/L SW-UNLOCK	Door lock switch signal (UNLOCK)/ON or OFF	ON: Door is unlocked OFF: Door is locked	-
DOR KEY SW-LOCK	Door key lock and unlock switch signal/ON or OFF	ON: Door key is locked OFF: Door key is unlocked	-
P DOR KEY SW-UL	Door key lock and unlock switch signal (Front passenger)/ON or OFF	ON: Door key is unlocked OFF: Door key is locked	-
D DOR KEY SW-UL	Door key lock and unlock switch signal (Driver)/ON or OFF	ON: Door key is unlocked OFF: Door key is locked	-

2. ACTIVE TEST

HINT:

Performing the intelligent tester's ACTIVE TEST allows relay, VSV, actuator and other items to be operated without removing any parts. Performing the ACTIVE TEST early in troubleshooting is one way to save time. The DATA LIST can be displayed during the ACTIVE TEST.

(a) Connect the intelligent tester (with CAN VIM) to the DLC3.

(b) Turn the ignition switch on (IG).

(c) Perform the ACTIVE TEST according to the display on the tester.

Body ECU:

Item	Test Details	Diagnostic Note
DOOR LOCK	Operate door lock motor LOCK/UNLOCK	-
SHOCK UNLOCK	Operate door lock motor UNLOCK/OFF	-

ON-VEHICLE INSPECTION

1. CHECK ELECTRICAL DOOR LOCK OPERATION

(a) Check the basic function.
  (1) Check that all doors lock when the door control switch (for manual operation) is turned to LOCK and all doors unlock when turned to UNLOCK.
  (2) Check that all doors lock when the driver side door lock key cylinder is turned to LOCK using the key.
  (3) Check that only the driver side door unlocks when the driver side door lock key cylinder is turned to UNLOCK and all doors unlock when turned to UNLOCK once again within 3 seconds using the key (2-step unlocking function).

(b) Check the key lock-in prevention function.
NOTICE:
In order to prevent the key from being actually locked-in, the inspection should be made with the driver side door window open.
  (1) Have the key inserted into the ignition key cylinder.
  (2) With the driver side door open, check that all doors unlock immediately after the door lock knob for the driver side door is turned to LOCK.
  (3) With the driver side door open, check that all doors unlock immediately after the door control switch (for manual operation) is turned to LOCK.
  (4) With the driver side door open, turn the driver side door lock knob to LOCK and hold it for 2 seconds or more, and then close the driver side door. Then check that all doors unlock.

(c) Check the security function.
  (1) Close all doors with the driver side door window open so that the door control switch can be operated from outside the vehicle.
  (2) Pull out the key, open the driver side door and then close and lock the door without using the key. Under this condition, check that all doors do not unlock when the door control switch (for manual operation) is turned to UNLOCK from outside the vehicle.
  (3) Pull out the key, close and lock the driver side door by key operation. Under this condition, check that all doors do not unlock when the door control switch (for manual operation) is turned to UNLOCK from outside the vehicle.

(4) Pull out the key, close the driver side door and lock the door by wireless door lock operation. Under this condition, check that all doors do not unlock when the door control switch (for manual operation) is tuned to UNLOCK from outside the vehicle.
HINT:
Check that the security function is canceled under the following conditions.
- The ignition switch is turned ON.
- The driver side door is unlocked using the key.
- The door control switch (for manual operation) is turned to UNLOCK after the door control knob is turned to UNLOCK manually.
- The doors are unlocked with wireless operation.

(d) Check the automatic unlocking function interlocked with the shift lever.
(1) When the ignition switch is ON, moving the shift lever to P position from any position other than P while the vehicle speed is 0 km/h will automatically unlock all the doors.

(e) Check the driver door-linked automatic door unlock function.
(1) When the driver door is closed, turning the ignition switch from ON to OFF position and opening the driver door within 10 seconds will automatically unlock all the doors.

(f) Check the vehicle speed automatic door lock.
(1) When the vehicle speed reaches 20 km/h (13 mph), all doors will automatically lock.

(g) Check the automatic locking function interlocked with the shift lever.
(1) When any door is unlocked with all doors closed and the engine started, check that all doors automatically lock when the shift lever is moved into any position from the P position.
(2) For the function described above, whether the brake pedal needs to be depressed or not can be selected using the intelligent tester.
(3) When any door is unlocked after all doors automatically lock, check that all doors attempt to automatically lock once again (retry function). The retry function is canceled when any of the following conditions is fulfilled:
- All doors are locked.
- Any door is opened.
- The shift lever is moved into the P position.
- The doors are locked or unlocked by the user.
- The ignition switch is turned OFF.
- The engine is stopped.

Driver Side Door UNLOCK Detection Switch Circuit

DESCRIPTION

The door unlock detection switch is built in the door lock assembly.
This switch is ON when the door lock knob is in the unlock position and OFF when it is in the lock position.
It is used as one of the operating conditions for the key confinement prevention function.

WIRING DIAGRAM

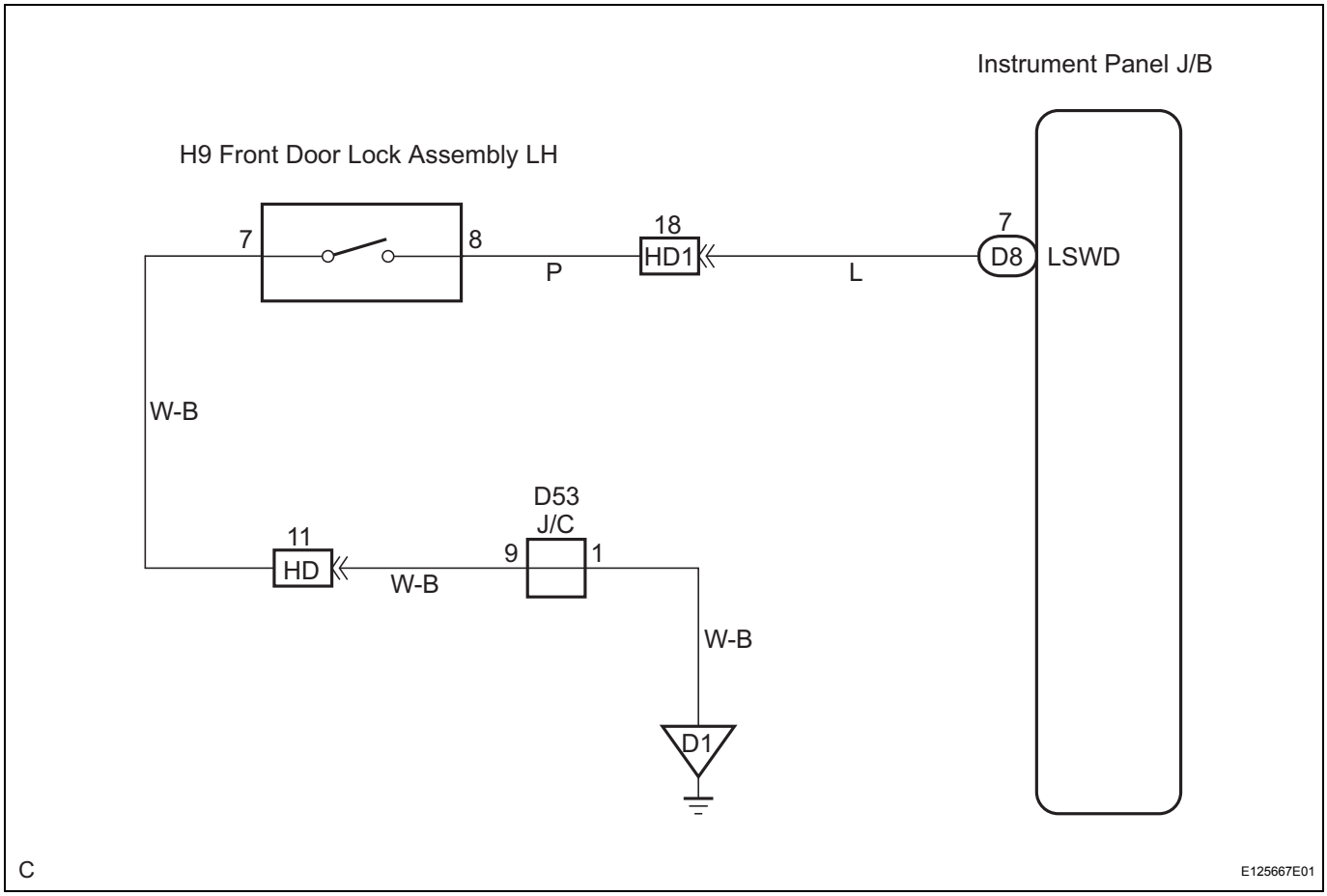

INSPECTION PROCEDURE

1	READ VALUE OF DATA LIST (DOOR UNLOCK DETECTION SWITCH)

(a) Check the DATA LIST for proper functioning of the door unlock detection switch.

Body ECU:

Item	Measurement Item / Display (Range)	Normal Condition	Diagnostic Note
D LOCK POS SW	Door unlock detection switch signal / ON or OFF	ON: Door is unlocked OFF: Door is locked	-

OK:
"ON" (door is unlocked) appears on the screen.

NG	Go to step 2

OK

PROCEED TO NEXT CIRCUIT INSPECTION SHOWN IN PROBLEM SYMPTOMS TABLE

2 INSPECT FRONT DOOR LOCK ASSEMBLY LH (DOOR UNLOCK DETECTION SWITCH)

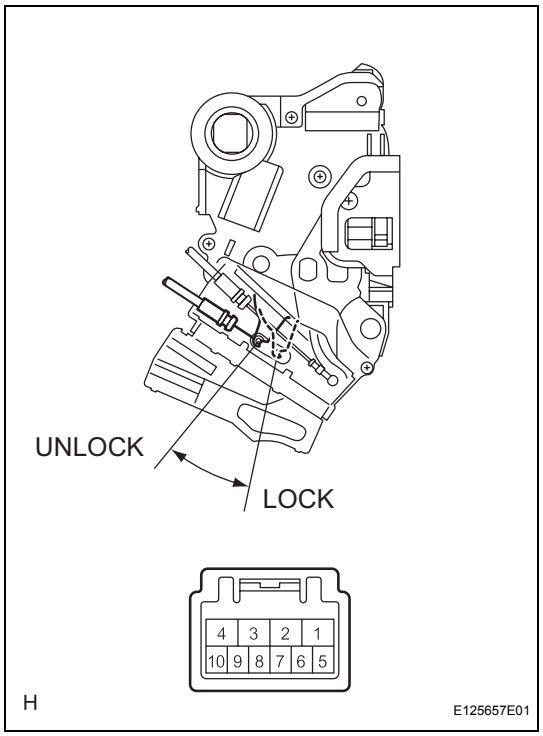

(a) Remove the front door lock assembly LH.
(b) Measure the resistance of the door unlock detection switch.

Resistance

Tester Condition	Door Lock Condition	Specified Condition
Battery positive (+) → Terminal 1 Battery negative (-) → Terminal 4	ON (Door lock set to UNLOCK)	7 - 8 (Below 1 Ω)
Battery positive (+) → Terminal 4 Battery negative (-) → Terminal 1	OFF (Door Lock set to LOCK)	7 - 8 (10 kΩ or higher)

NG → **REPLACE FRONT DOOR LOCK ASSEMBLY LH**

OK

DL

3	CHECK WIRE HARNESS (FRONT DOOR LOCK ASSEMBLY LH - INSTRUMENT PANEL J/B)

D8 Instrument Panel J/B:

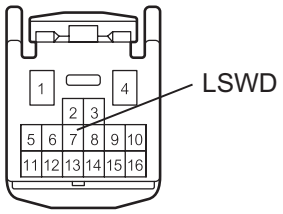

H9 Front Door Lock Assembly LH:

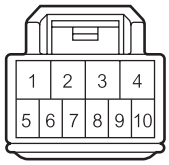

H

E125668E01

(a) Disconnect the D8 and H9 connectors.
(b) Measure the resistance of the wire harness side connectors.

Resistance

Tester Connection	Condition	Specified Condition
D8-7 - H9-8	Always	Below 1 Ω
H9-7 - Body ground	Always	Below 1 Ω

NG → **REPAIR OR REPLACE HARNESS OR CONNECTOR**

OK

PROCEED TO NEXT CIRCUIT INSPECTION SHOWN IN PROBLEM SYMPTOMS TABLE

Front Passenger Side Door UNLOCK Detection Switch Circuit

DESCRIPTION

The door unlock detection switch is built in the door lock assembly.
This switch is ON when the door lock knob is in the unlock position and OFF when the knob is in the lock position. It is used as one of the operating conditions for the key confinement prevention function.

WIRING DIAGRAM

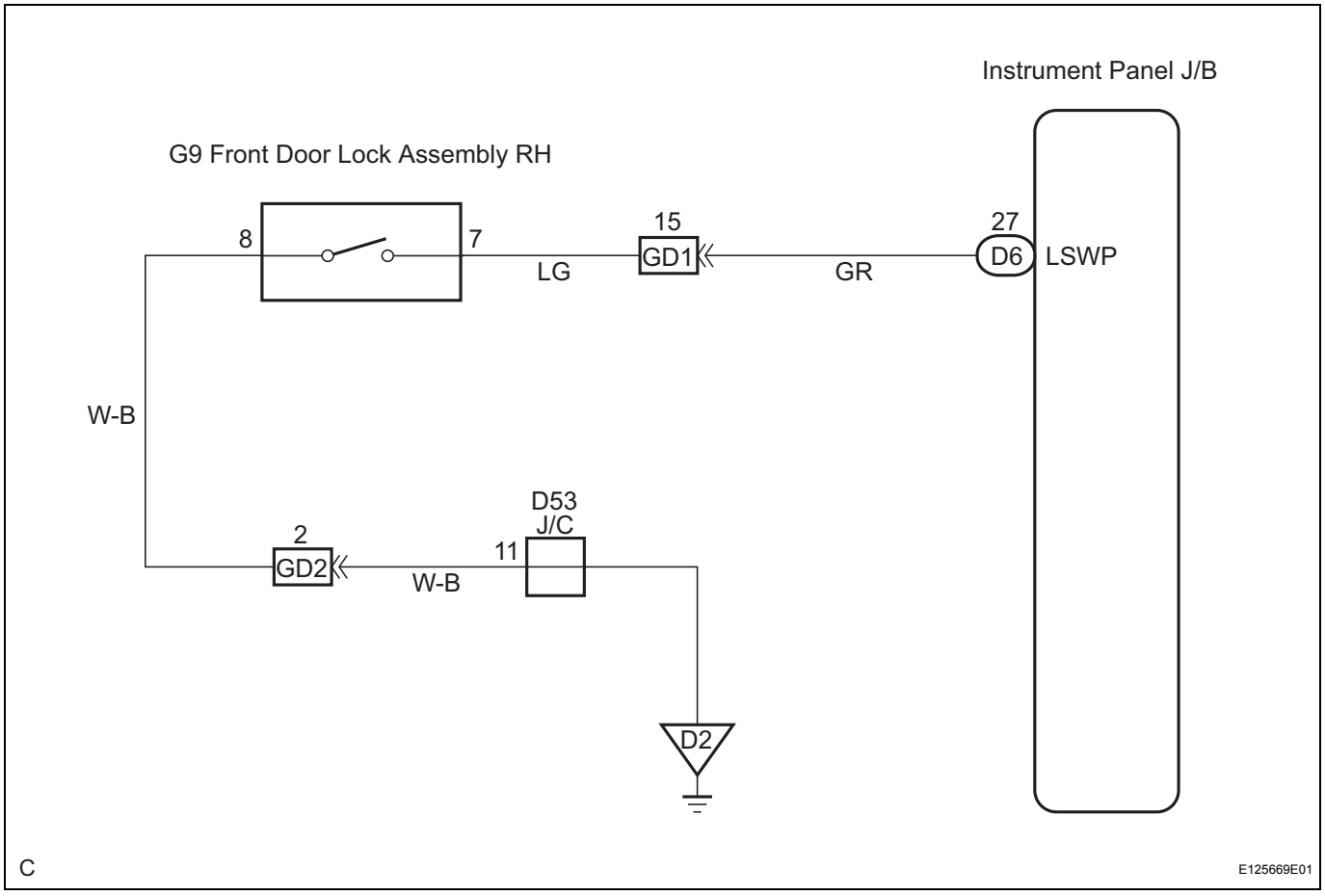

INSPECTION PROCEDURE

1	READ VALUE OF DATA LIST (DOOR UNLOCK DETECTION SWITCH)

(a) Check the DATA LIST for proper functioning of the door unlock detection switch.

Body ECU:

Item	Measurement Item / Display (Range)	Normal Condition	Diagnostic Note
P LOCK POS SW	Door unlock detection switch signal / ON or OFF	ON: Door is unlocked OFF: Door is locked	-

OK:
"ON" (door is unlocked) appears on the screen.

NG	Go to step 2

OK

PROCEED TO NEXT CIRCUIT INSPECTION SHOWN IN PROBLEM SYMPTOMS TABLE

2 INSPECT FRONT DOOR LOCK ASSEMBLY RH (DOOR UNLOCK DETECTION SWITCH)

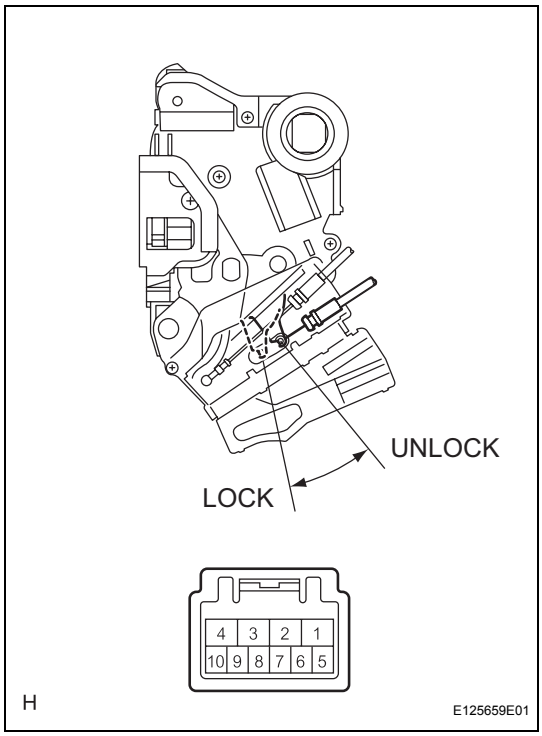

(a) Remove the front door lock assembly RH.
(b) Measure the resistance of the door unlock detection switch.

Resistance

Tester Connection	Door Lock Condition	Specified Condition
Battery positive (+) → Terminal 1 Battery negative (-) → Terminal 4	ON (Door lock set to UNLOCK)	7 - 8 (Below 1 Ω)
Battery positive (+) → Terminal 4 Battery negative (-) → Terminal 1	OFF (Door Lock set to LOCK)	7 - 8 (10 kΩ or higher)

NG → **REPLACE FRONT DOOR LOCK ASSEMBLY RH**

OK

3	CHECK WIRE HARNESS (FRONT DOOR LOCK ASSEMBLY RH - INSTRUMENT PANEL J/B)

D6 Instrument Panel J/B:

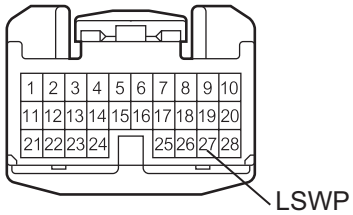

G9 Door Lock Assembly (Front Passenger Side):

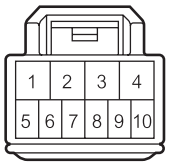

H

E125670E01

(a) Disconnect the D6 and G9 connectors.
(b) Measure the resistance of the wire harness side connectors.

Resistance

Tester Connection	Condition	Specified Condition
D6-27 - G9-7	Always	Below 1 Ω
G9-8 - Body ground	Always	Below 1 Ω

NG → **REPAIR OR REPLACE HARNESS OR CONNECTOR**

OK

PROCEED TO NEXT CIRCUIT INSPECTION SHOWN IN PROBLEM SYMPTOMS TABLE

DL

Rear Door UNLOCK Detection Switch LH Circuit

DESCRIPTION

The door unlock detection switch is built in the door lock assembly.
This switch is ON when the door lock knob is in the unlock position and OFF when it is in the lock position.
It is used as one of the operating conditions for the key confinement prevention function.

WIRING DIAGRAM

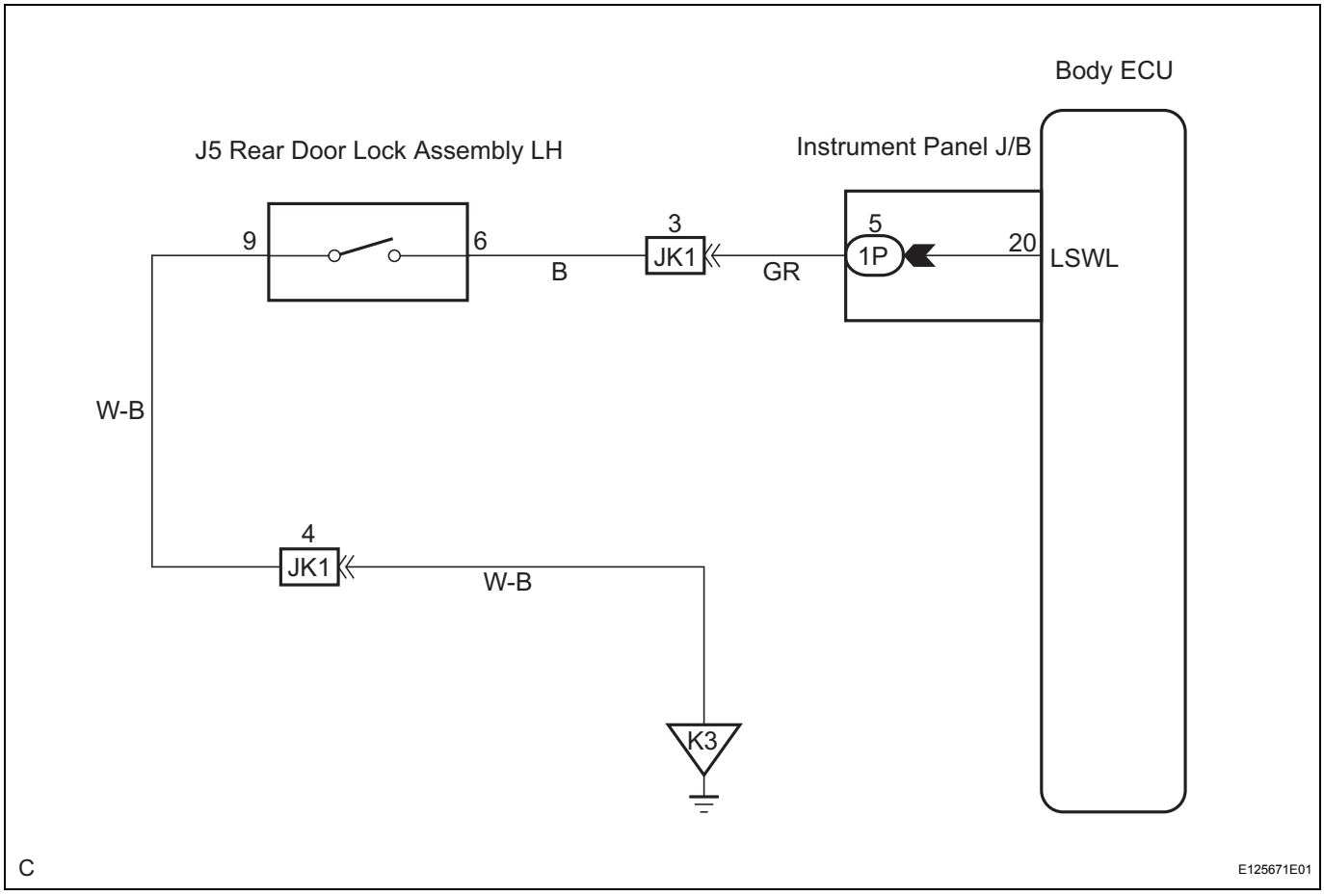

INSPECTION PROCEDURE

1	READ VALUE OF DATA LIST (DOOR UNLOCK DETECTION SWITCH)

(a) Check the DATA LIST for proper functioning of the door unlock detection switch.

Body ECU:

Item	Measurement Item / Display (Range)	Normal Condition	Diagnostic Note
Rr LOCK POS SW	Door unlock detection switch signal / ON or OFF	ON: Door is unlocked OFF: Door is locked	-

OK:
"ON" (door is unlocked) appears on the screen.

NG	Go to step 2

OK

PROCEED TO NEXT CIRCUIT INSPECTION SHOWN IN PROBLEM SYMPTOMS TABLE

2 INSPECT REAR DOOR LOCK ASSEMBLY LH (DOOR UNLOCK DETECTION SWITCH)

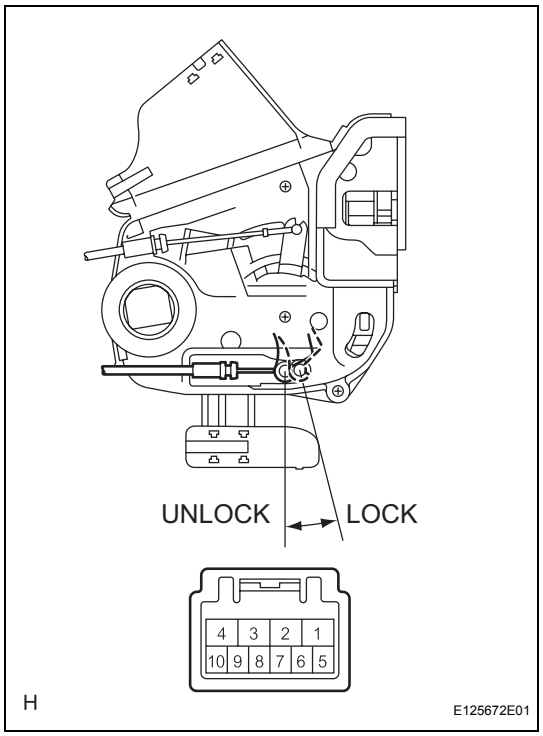

(a) Remove the rear door lock assembly LH.
(b) Measure the resistance of the door unlock detection switch.

Resistance

Tester Connection	Door Lock Condition	Specified Condition
Battery positive (+) → Terminal 1 Battery negative (-) → Terminal 4	ON (Door lock set to UNLOCK)	6 - 9 (Below 1 Ω)
Battery positive (+) → Terminal 4 Battery negative (-) → Terminal 1	OFF (Door lock set to LOCK)	6 - 9 (10 kΩ or higher)

NG → **REPLACE REAR DOOR LOCK ASSEMBLY LH**

OK

DL

3	CHECK WIRE HARNESS (REAR DOOR LOCK ASSEMBLY LH - INSTRUMENT PANEL J/B)

J5 Rear Door Lock Assembly LH:

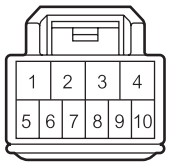

Instrument Panel J/B:

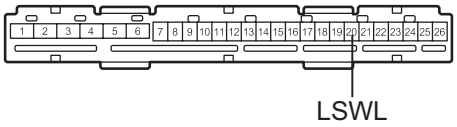

H

E125660E04

(a) Disconnect the J5 connector.
(b) Remove the body ECU from instrument panel J/B.
(c) Measure the resistance of the wire harness side connectors.

Resistance

Tester Connection	Condition	Specified Condition
20 - J5-6	Always	Below 1 Ω
J5-9 - Body ground	Always	Below 1 Ω

NG → **REPAIR OR REPLACE HARNESS OR CONNECTOR**

OK

PROCEED TO NEXT CIRCUIT INSPECTION SHOWN IN PROBLEM SYMPTOMS TABLE

Rear Door UNLOCK Detection Switch RH Circuit

DESCRIPTION

The door unlock detection switch is built in the door lock assembly.
This switch is ON when the door lock knob is in the unlock position and OFF when it is in the lock position.
It is used as one of the operating conditions for the key confinement prevention function.

WIRING DIAGRAM

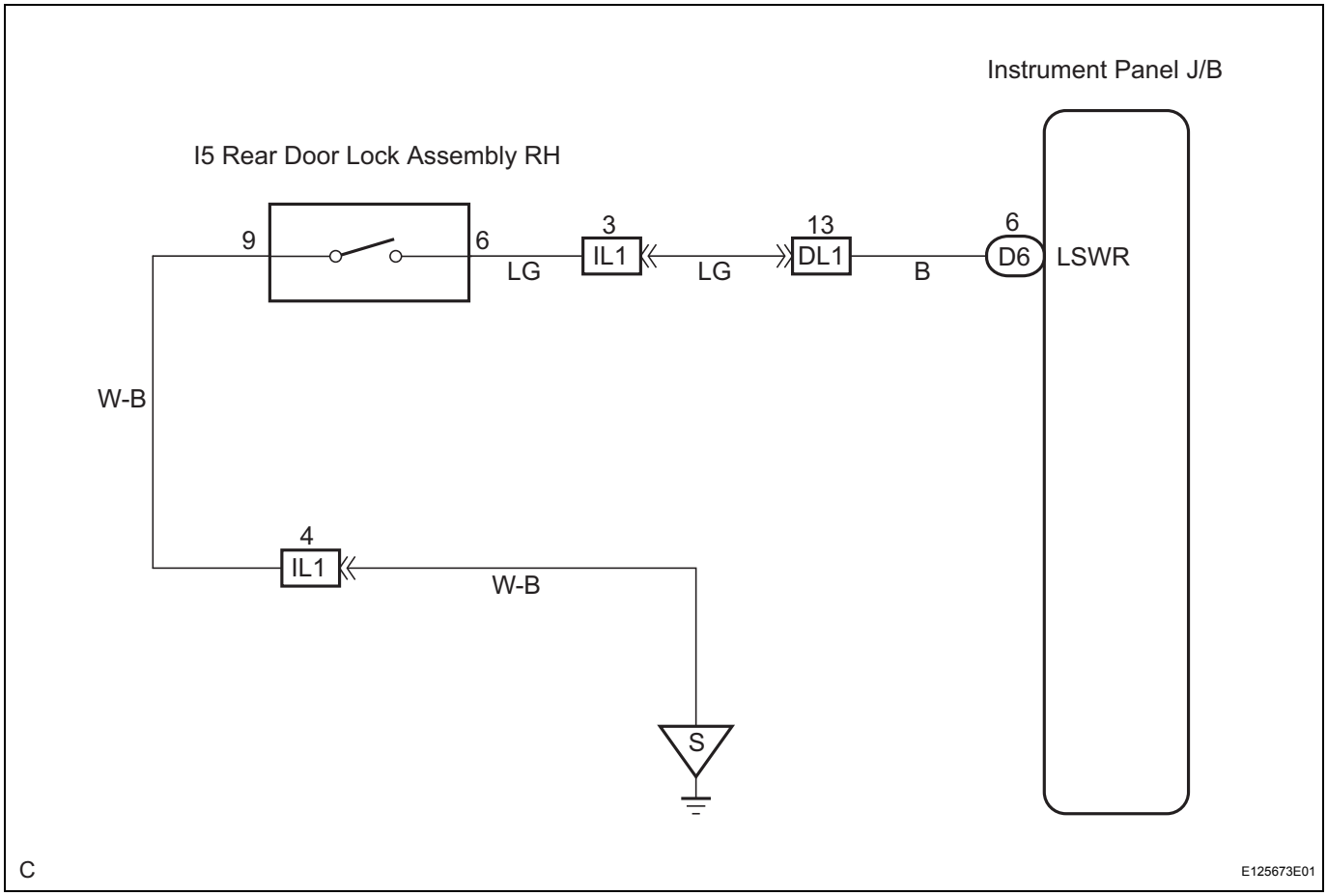

INSPECTION PROCEDURE

1	READ VALUE OF DATA LIST (DOOR UNLOCK DETECTION SWITCH)

(a) Check the DATA LIST for proper functioning of the door unlock detection switch.

Body ECU:

Item	Measurement Item / Display (Range)	Normal Condition	Diagnostic Note
Rr LOCK POS SW	Door unlock detection switch signal / ON or OFF	ON: Door is unlocked OFF: Door is locked	-

OK:
"ON" (door is unlocked) appears on the screen.

NG	Go to step 2

OK

PROCEED TO NEXT CIRCUIT INSPECTION SHOWN IN PROBLEM SYMPTOMS TABLE

2	INSPECT REAR DOOR LOCK ASSEMBLY RH (DOOR UNLOCK DETECTION SWITCH)

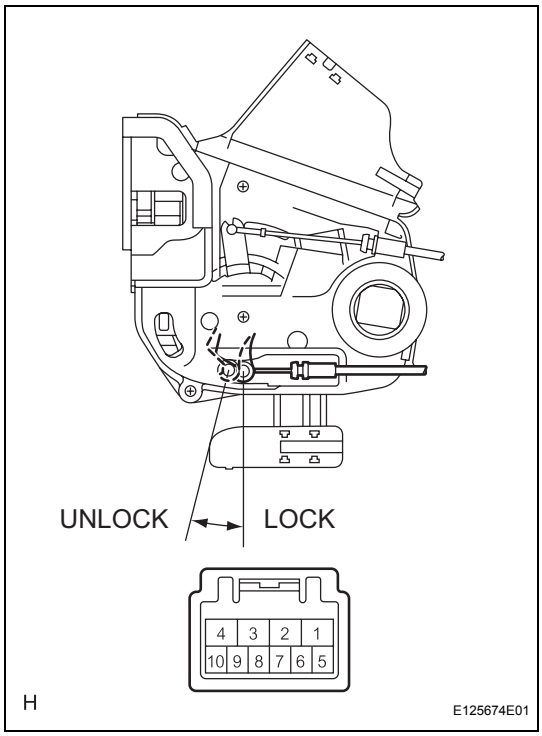

(a) Remove the rear door lock assembly RH.
(b) Measure the resistance of the door unlock detection switch.

Resistance

Tester Connection	Door Lock Condition	Specified Condition
Battery positive (+) → Terminal 1 Battery negative (-) → Terminal 4	ON (Door lock set to UNLOCK)	6 - 9 (Below 1 Ω)
Battery positive (+) → Terminal 4 Battery negative (-) → Terminal 1	OFF (Door lock set to LOCK)	6 - 9 (10 kΩ or higher)

NG → **REPLACE REAR DOOR LOCK ASSEMBLY RH**

OK

3	CHECK WIRE HARNESS (REAR DOOR LOCK ASSEMBLY RH - INSTRUMENT PANEL J/B)

D6 Instrument Panel J/B:

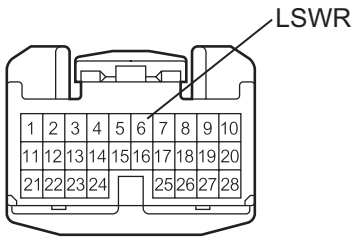

I5 Door Lock Assembly (Rear RH):

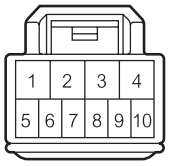

H

E125670E02

(a) Disconnect the D6 and I5 connectors.
(b) Measure the resistance of the wire harness side connectors.

Resistance

Tester Connection	Condition	Specified Condition
D6-6 - I5-6	Always	Below 1 Ω
I5-9 - Body ground	Always	Below 1 Ω

NG → **REPAIR OR REPLACE HARNESS OR CONNECTOR**

OK

PROCEED TO NEXT CIRCUIT INSPECTION SHOWN IN PROBLEM SYMPTOMS TABLE

DL

Door Lock Control Switch Circuit

DESCRIPTION

When a malfunction is detected in these switches, inspect each switch. Then, replace the malfunctioning switch. If no malfunction is detected in switches, check the wire harness.

WIRING DIAGRAM

DRIVER SIDE:

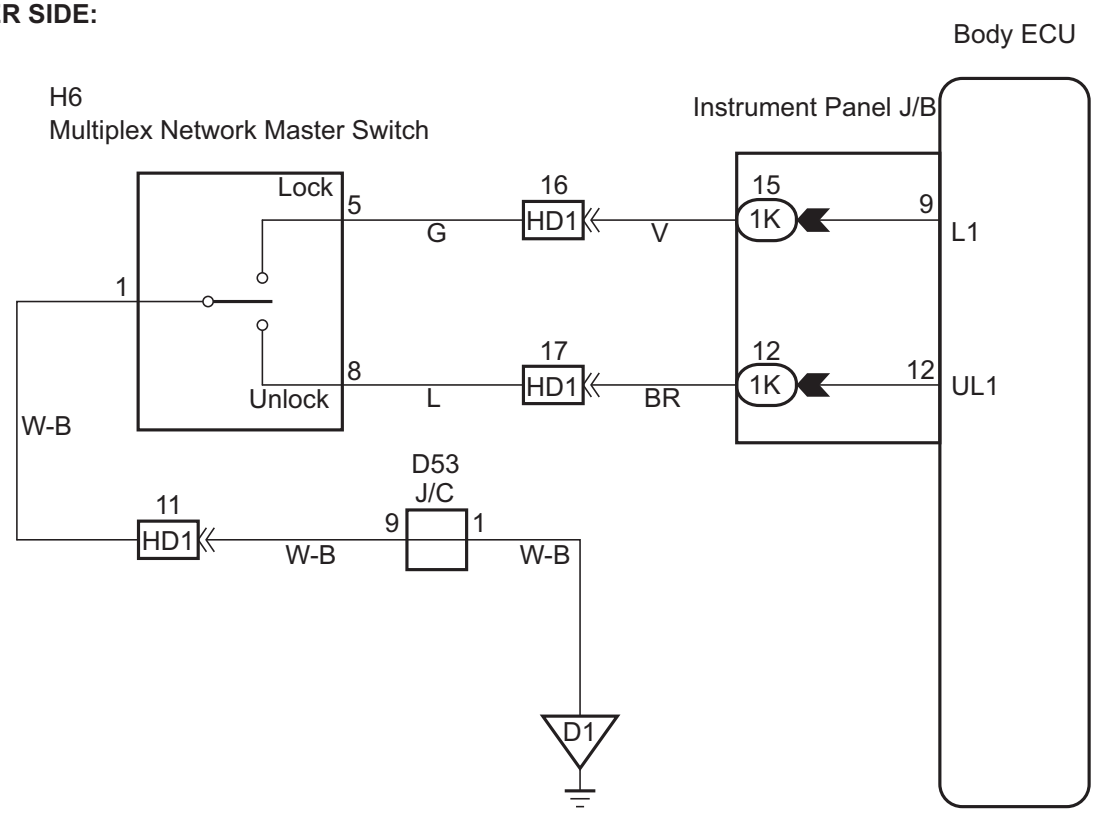

C

E125651E01

PASSENGER SIDE:

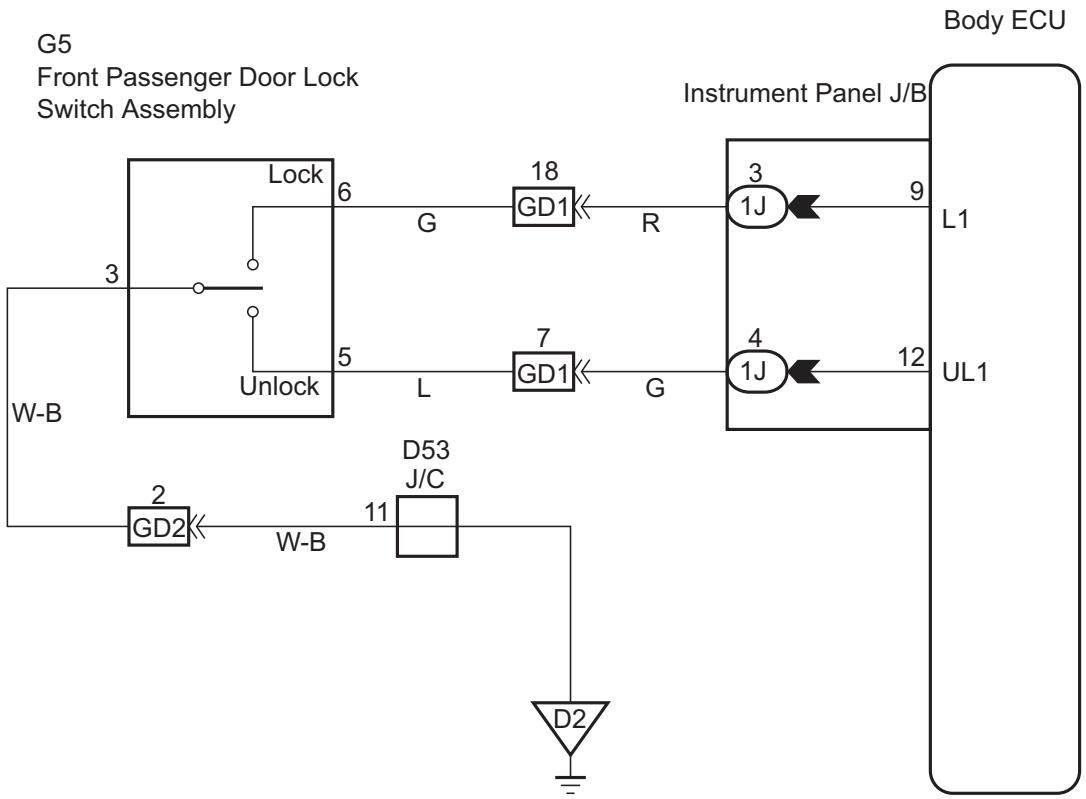

INSPECTION PROCEDURE

1	READ VALUE OF DATA LIST (DOOR LOCK SWITCH)

(a) Check the DATA LIST for proper functioning of the door unlock detection switch.

Body ECU:

Item	Measurement Item / Display (Range)	Normal Condition	Diagnostic Note
D/L SW-LOCK	Door lock switch signal (LOCK) / ON or OFF	ON: Door is locked OFF: Door is unlocked	-
D/L SW-UNLOCK	Door lock switch signal (UNLOCK) / ON or OFF	ON: Door is unlocked OFF: Door is locked	-

OK:
"ON" (door is locked / unlocked) appears on the screen.

NG → **Go to step 2**

OK

PROCEED TO NEXT CIRCUIT INSPECTION SHOWN IN PROBLEM SYMPTOMS TABLE

DL

2	INSPECT DOOR LOCK CONTROL SWITCH

DRIVER SIDE:

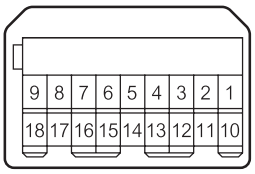

H

E125652E01

(a) Inspect door lock switch (driver side).
(1) Disconnect the multiplex network master switch assembly.
(2) Measure the resistance of the switch when the switch is operated.

Resistance

Tester Connection	Door Lock Condition	Specified Condition
1 - 8	ON (Door lock set to UNLOCK)	Below 1 Ω
1 - 5	OFF (Door Lock set to LOCK)	Below 1 Ω

PASSENGER SIDE:

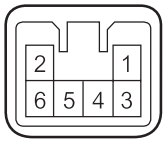

H

E125654E01

(b) Inspect door lock switch (passenger side).
(1) Disconnect the front passenger door lock switch assembly.
(2) Measure the resistance of the switch when the switch is operated.

Resistance

Tester Connection	Door Lock Condition	Specified Condition
3 - 5	ON (Door lock set to UNLOCK)	Below 1 Ω
3 - 6	OFF (Door Lock set to LOCK)	Below 1 Ω

NG → **REPLACE DOOR LOCK CONTROL SWITCH**

OK

3	CHECK WIRE HARNESS (DOOR LOCK SWITCH ASSEMBLY - INSTRUMENT PANEL J/B)

H6 Multiplex Network Master Switch Assembly:

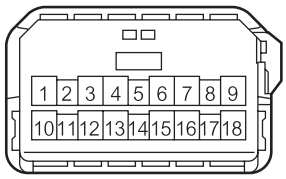

Instrument Panel J/B:

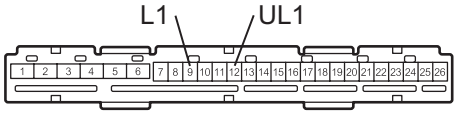

H

E125653E01

(a) Inspect driver side.
(1) Disconnect the H6 connector.
(2) Remove the body ECU from instrument panel J/B.
(3) Measure the resistance of the wire harness side connectors.

Resistance

Tester Connection	Condition	Specified Condition
9 - H6-5 (L1)	Always	Below 1 Ω
12 - H6-8 (UL1)	Always	Below 1 Ω
H6-1 - Body ground	Always	Below 1 Ω

DL

G5 Front Passenger Door Lock Switch Assembly:

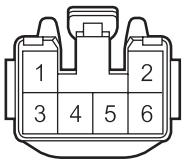

Instrument Panel J/B:

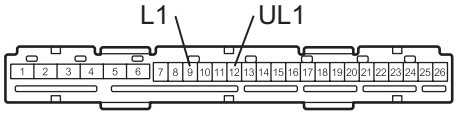

H

E125655E01

(b) Inspect passenger side.
(1) Disconnect the G5 connector.
(2) Remove the body ECU from instrument panel J/B.
(3) Measure the resistance of the wire harness side connectors.

Resistance

Tester Connection	Condition	Specified Condition
9 - G5-6 (L1)	Always	Below 1 Ω
12 - G5-5 (UL1)	Always	Below 1 Ω
G5-3 - Body ground	Always	Below 1 Ω

NG → **REPAIR OR REPLACE HARNESS OR CONNECTOR**

OK

PROCEED TO NEXT CIRCUIT INSPECTION SHOWN IN PROBLEM SYMPTOMS TABLE

Driver Side Door Lock Motor Circuit

DESCRIPTION

The door lock motor is built in the door lock assembly.
The body ECU receives the driver door lock switch signal from the master switch and operates the door lock motor.

WIRING DIAGRAM

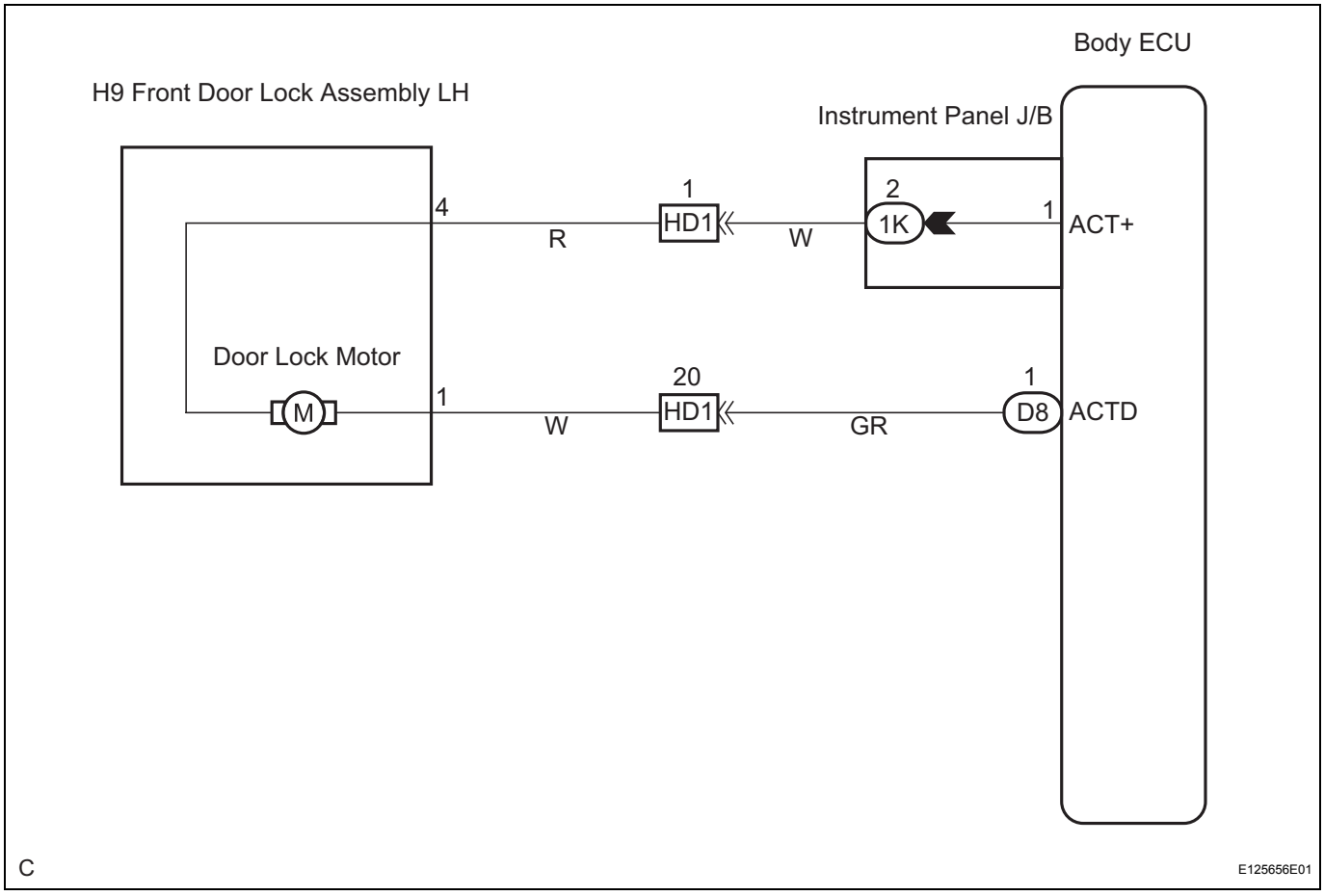

INSPECTION PROCEDURE

1	PERFORM ACTIVE TEST (DOOR LOCK)

(a) Select the ACTIVE TEST, use the intelligent tester to generate a control command, and then check that the power door lock operates.

Body ECU:

Item	Test Details	Diagnostic Note
DOOR LOCK	Operate door lock motor LOCK / UNLOCK	-

OK:
Door lock is locked / unlocked.

NG	Go to step 2

OK

PROCEED TO NEXT CIRCUIT INSPECTION SHOWN IN PROBLEM SYMPTOMS TABLE

2 INSPECT FRONT DOOR LOCK ASSEMBLY LH (DOOR LOCK MOTOR)

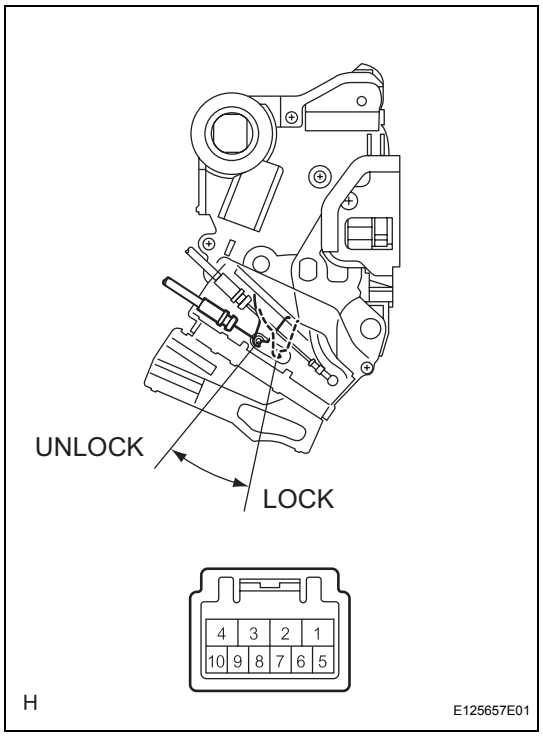

(a) Remove the front door lock assembly LH.
(b) Apply battery voltage and check operation of the door lock motor.

Standard

Measurement Condition	Specified Condition
Battery positive (+) → Terminal 4 Battery negative (-) → Terminal 1	Lock
Battery positive (+) → Terminal 1 Battery negative (-) → Terminal 4	Unlock

NG → **REPLACE FRONT DOOR LOCK ASSEMBLY LH**

OK

DL

3	CHECK WIRE HARNESS (FRONT DOOR LOCK ASSEMBLY LH - INSTRUMENT PANEL J/B)

D8 Instrument Panel J/B:

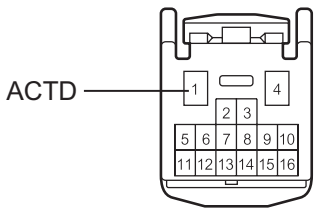

H9 Front Door Lock Assembly LH:

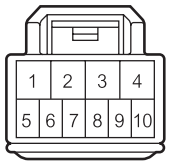

Instrument Panel J/B:

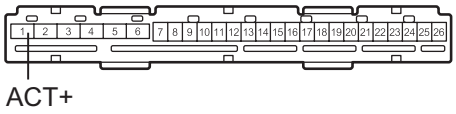

(a) Disconnect the D8 and H9 connectors.
(b) Remove the body ECU from instrument panel J/B.
(c) Measure the resistance of the wire harness side connectors.

Resistance

Tester Connection	Condition	Specified Condition
1 - H9-4 (ACT+)	Always	Below 1 Ω
D8-1 - H9-1 (ACTD)	Always	Below 1 Ω

NG → **REPAIR OR REPLACE HARNESS OR CONNECTOR**

OK

PROCEED TO NEXT CIRCUIT INSPECTION SHOWN IN PROBLEM SYMPTOMS TABLE

Driver Side Door Lock Motor Circuit

DESCRIPTION

The door lock motor is built in the door lock assembly.
The body ECU receives the driver door lock switch signal from the master switch and operates the door lock motor.

WIRING DIAGRAM

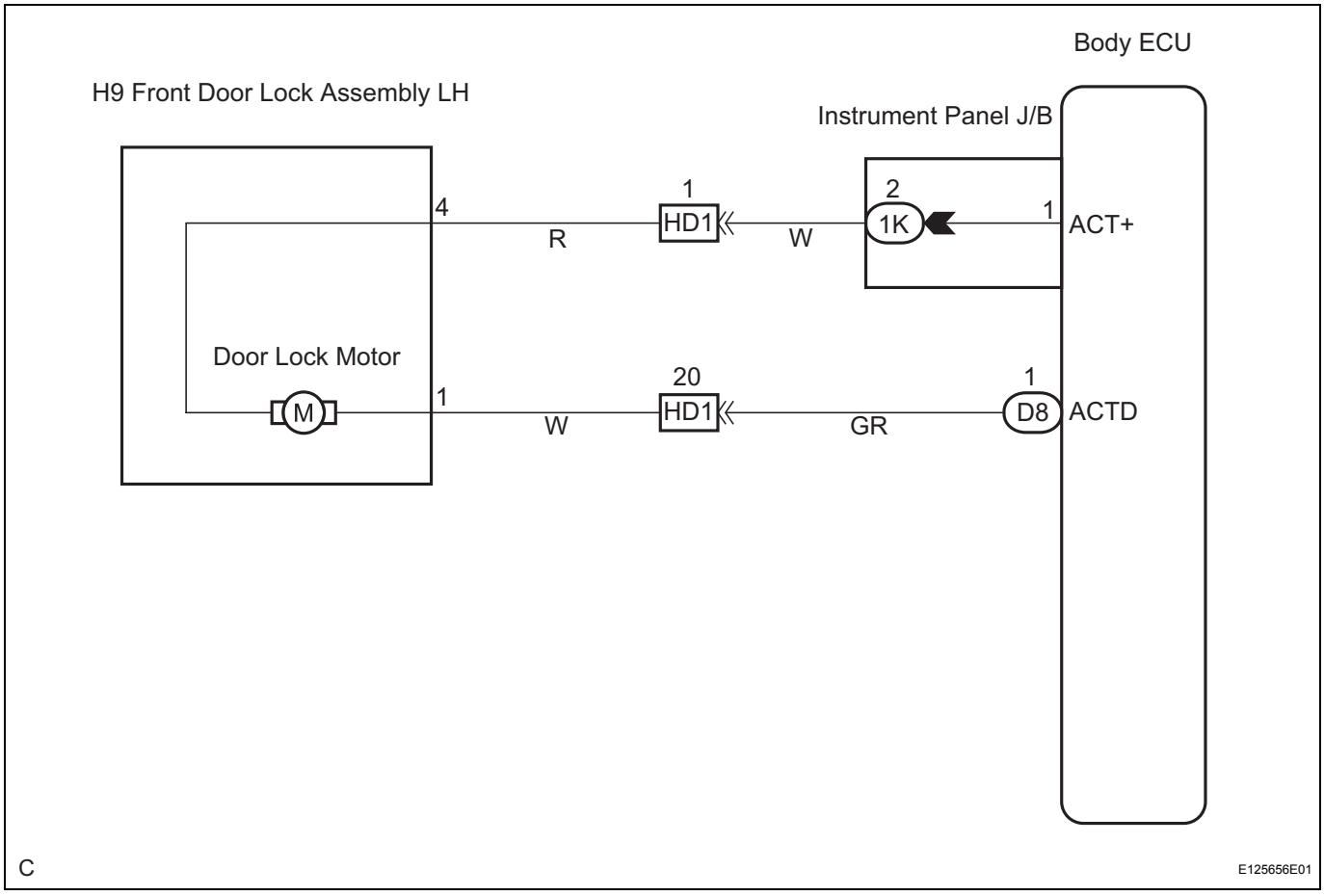

INSPECTION PROCEDURE

1	PERFORM ACTIVE TEST (DOOR LOCK)

(a) Select the ACTIVE TEST, use the intelligent tester to generate a control command, and then check that the power door lock operates.

Body ECU:

Item	Test Details	Diagnostic Note
DOOR LOCK	Operate door lock motor LOCK / UNLOCK	-

OK:
Door lock is locked / unlocked.

NG	Go to step 2

OK

PROCEED TO NEXT CIRCUIT INSPECTION SHOWN IN PROBLEM SYMPTOMS TABLE

2 INSPECT FRONT DOOR LOCK ASSEMBLY LH (DOOR LOCK MOTOR)

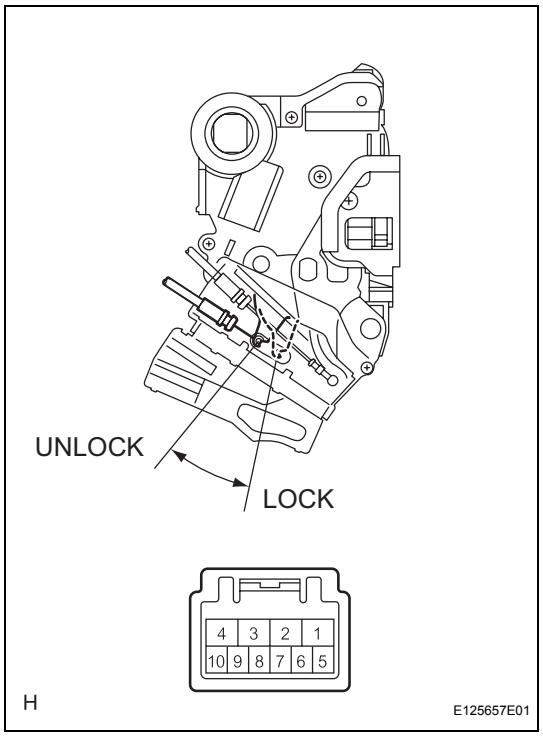

(a) Remove the front door lock assembly LH.
(b) Apply battery voltage and check operation of the door lock motor.

Standard

Measurement Condition	Specified Condition
Battery positive (+) → Terminal 4 Battery negative (-) → Terminal 1	Lock
Battery positive (+) → Terminal 1 Battery negative (-) → Terminal 4	Unlock

NG → **REPLACE FRONT DOOR LOCK ASSEMBLY LH**

OK

DL

3	CHECK WIRE HARNESS (FRONT DOOR LOCK ASSEMBLY LH - INSTRUMENT PANEL J/B)

D8 Instrument Panel J/B:

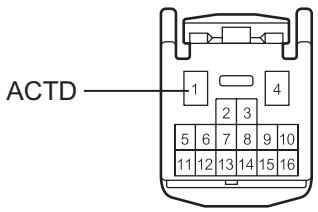

H9 Front Door Lock Assembly LH:

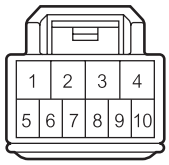

Instrument Panel J/B:

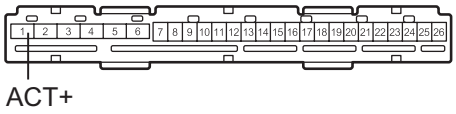

(a) Disconnect the D8 and H9 connectors.
(b) Remove the body ECU from instrument panel J/B.
(c) Measure the resistance of the wire harness side connectors.

Resistance

Tester Connection	Condition	Specified Condition
1 - H9-4 (ACT+)	Always	Below 1 Ω
D8-1 - H9-1 (ACTD)	Always	Below 1 Ω

NG → **REPAIR OR REPLACE HARNESS OR CONNECTOR**

OK

PROCEED TO NEXT CIRCUIT INSPECTION SHOWN IN PROBLEM SYMPTOMS TABLE

Front Passenger Side Door Lock Motor Circuit

DESCRIPTION

The door lock motor is built in the door lock assembly.
The body ECU receives the front passenger door lock switch signal from the master switch and operates the door lock motor.

WIRING DIAGRAM

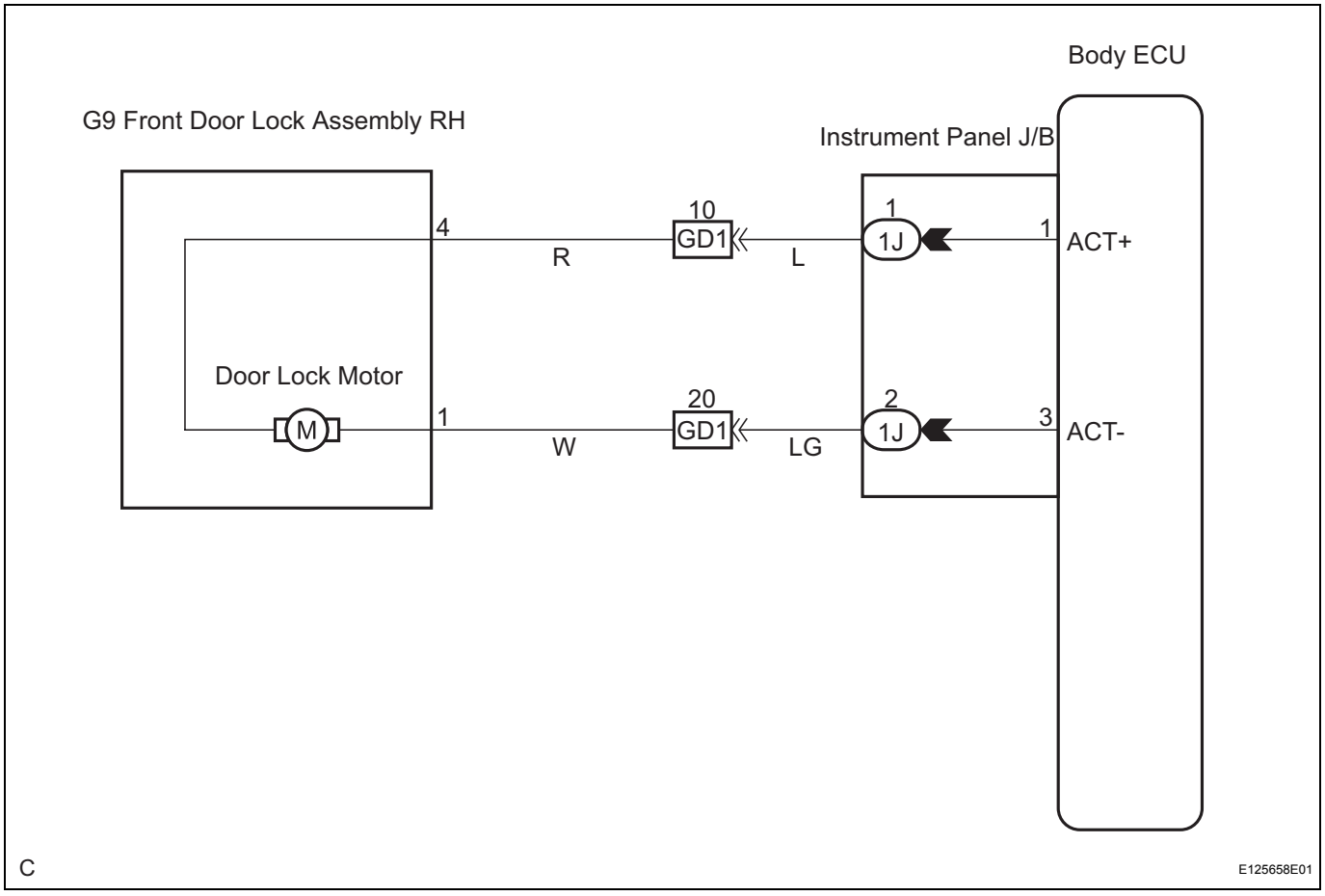

INSPECTION PROCEDURE

1	PERFORM ACTIVE TEST (DOOR LOCK)

(a) Select the ACTIVE TEST, use the intelligent tester to generate a control command, and then check that the power door lock operates.

Body ECU:

Item	Test Details	Diagnostic Note
DOOR LOCK	Operate door lock motor LOCK / UNLOCK	-

OK:
Door lock is locked / unlocked.

NG	Go to step 2

OK

PROCEED TO NEXT CIRCUIT INSPECTION SHOWN IN PROBLEM SYMPTOMS TABLE

2	INSPECT FRONT DOOR LOCK ASSEMBLY RH (DOOR LOCK MOTOR)

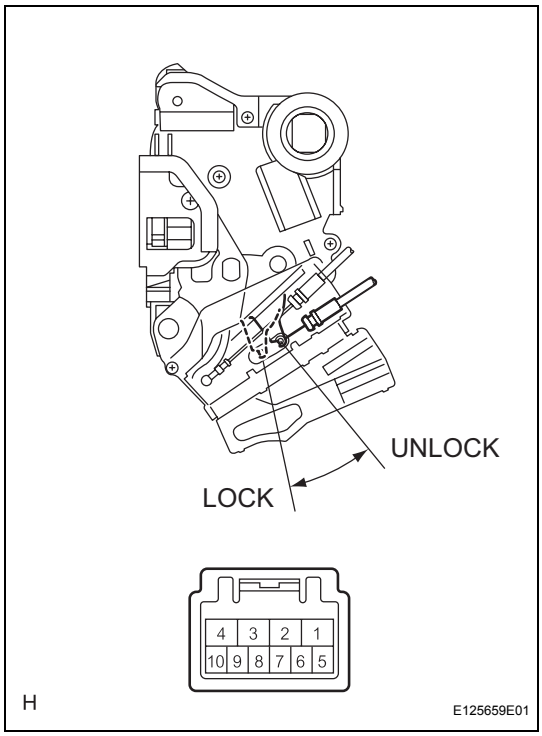

(a) Remove the front door lock assembly RH.
(b) Apply battery voltage and check operation of the door lock motor.

Voltage

Measurement Condition	Specified Condition
Battery positive (+) → Terminal 4 Battery negative (-) → Terminal 1	Lock
Battery positive (+) → Terminal 1 Battery negative (-) → Terminal 4	Unlock

NG → **REPLACE FRONT DOOR LOCK ASSEMBLY RH**

OK

3	CHECK WIRE HARNESS (FRONT DOOR LOCK ASSEMBLY RH - INSTRUMENT PANEL J/B)

G9 Front Door Lock Assembly RH:

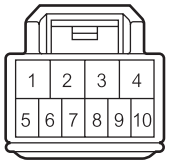

Instrument Panel J/B:

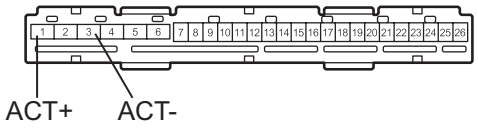

H

E125660E01

(a) Disconnect the G9 connector.
(b) Remove the body ECU from instrument panel J/B.
(c) Measure the resistance of the wire harness side connectors.

Resistance

Tester Connection	Condition	Specified Condition
1 - G9-4 (ACT+)	Always	Below 1 Ω
3 - G9-1 (ACT-)	Always	Below 1 Ω

NG → **REPAIR OR REPLACE HARNESS OR CONNECTOR**

OK

PROCEED TO NEXT CIRCUIT INSPECTION SHOWN IN PROBLEM SYMPTOMS TABLE

DL

Rear Door Lock Motor LH Circuit

DESCRIPTION

The door lock motor is built in the door lock assembly.
The body ECU receives the rear left door lock switch signal from the master switch and operates the door lock motor.

WIRING DIAGRAM

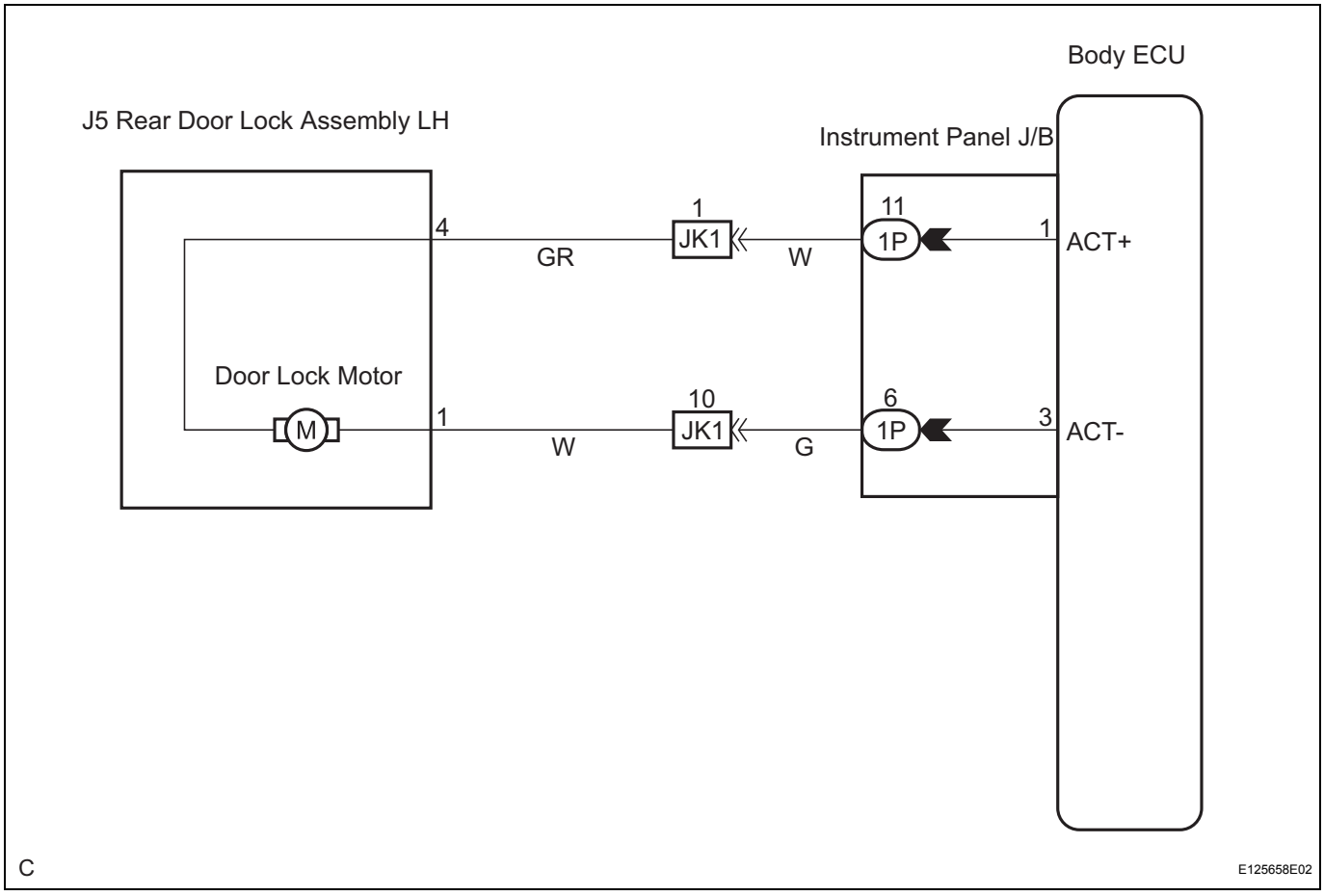

INSPECTION PROCEDURE

1	PERFORM ACTIVE TEST (DOOR LOCK)

(a) Select the ACTIVE TEST, use the intelligent tester to generate a control command, and then check that the power door lock operates.

Body ECU:

Item	Test Details	Diagnostic Note
DOOR LOCK	Operate door lock motor LOCK / UNLOCK	-

OK:
Door lock is locked / unlocked.

NG	Go to step 2

OK

PROCEED TO NEXT CIRCUIT INSPECTION SHOWN IN PROBLEM SYMPTOMS TABLE

2 **INSPECT REAR DOOR LOCK ASSEMBLY LH (DOOR LOCK MOTOR)**

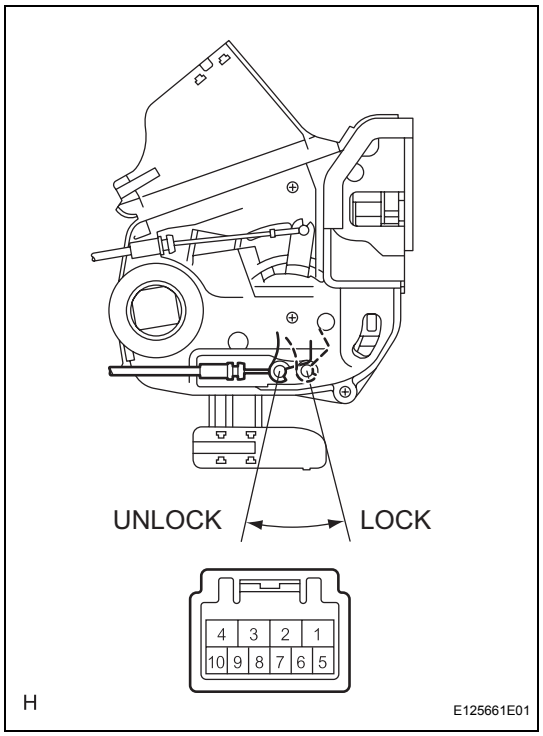

(a) Remove the rear door lock assembly LH.
(b) Apply battery voltage and check operation of the door lock motor.
Voltage

Measurement Condition	Specified Condition
Battery positive (+) → Terminal 4 Battery negative (-) → Terminal 1	Lock
Battery positive (+) → Terminal 1 Battery negative (-) → Terminal 4	Unlock

NG → **REPLACE REAR DOOR LOCK ASSEMBLY LH**

OK

DL

3	CHECK WIRE HARNESS (REAR DOOR LOCK ASSEMBLY LH - INSTRUMENT PANEL J/B)

J5 Front Door Lock Assembly LH:

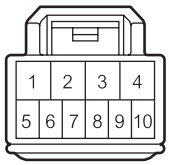

Instrument Panel J/B:

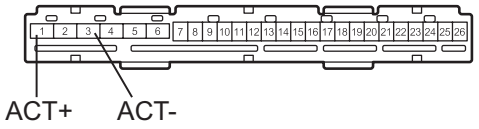

ACT+ ACT-

H

E125660E02

(a) Disconnect the J5 connector.
(b) Remove the body ECU from instrument panel J/B.
(c) Measure the resistance of the wire harness side connectors.

Resistance

Tester Connection	Condition	Specified Condition
1 - J5-4 (ACT+)	Always	Below 1 Ω
3 - J5-1 (ACT-)	Always	Below 1 Ω

NG → **REPAIR OR REPLACE HARNESS OR CONNECTOR**

OK

PROCEED TO NEXT CIRCUIT INSPECTION SHOWN IN PROBLEM SYMPTOMS TABLE

Rear Door Lock Motor RH Circuit

DESCRIPTION

The door lock motor is built in the door lock assembly.
The body ECU receives the rear right door lock switch signal from the master switch and operates the door lock motor.

WIRING DIAGRAM

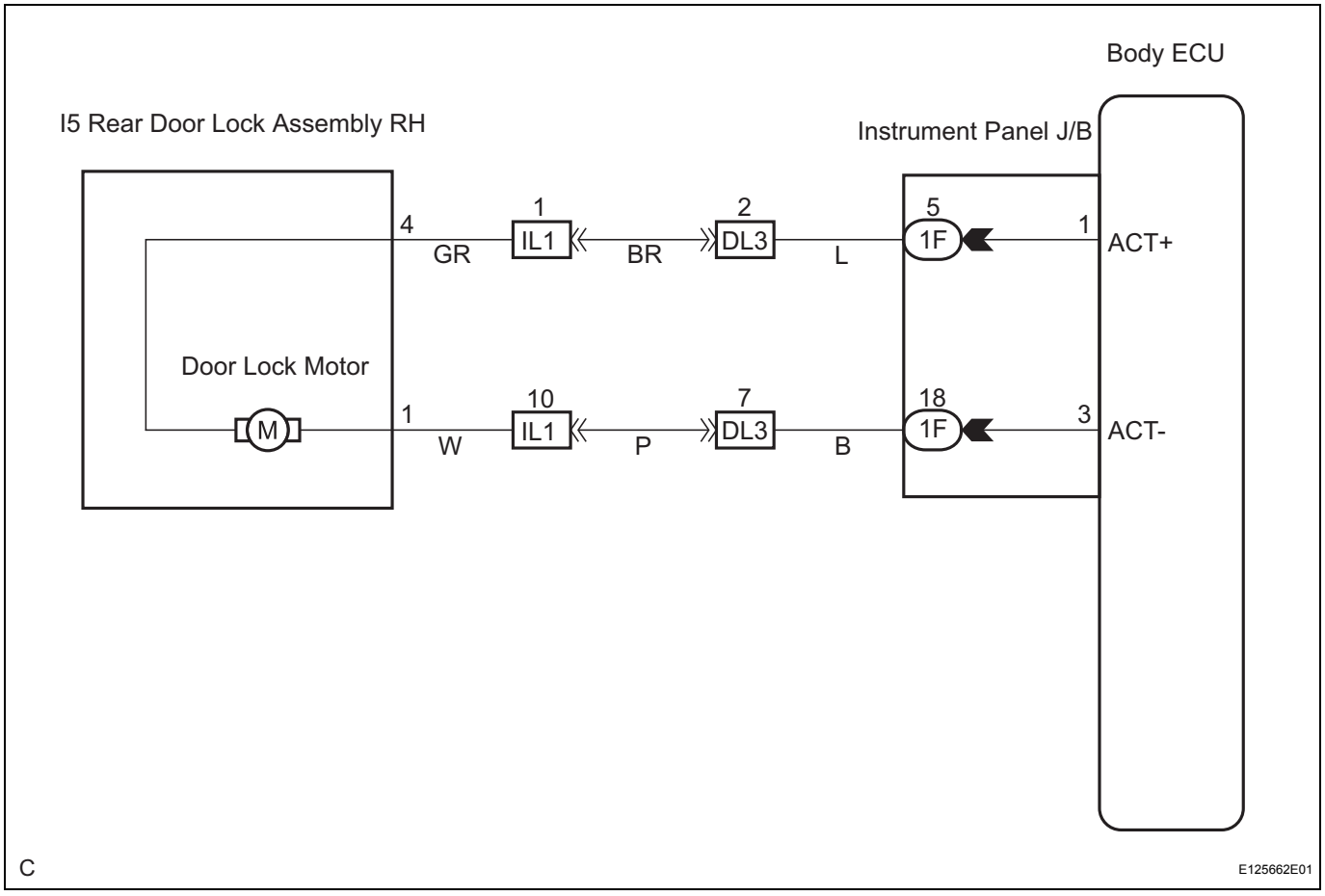

INSPECTION PROCEDURE

1	PERFORM ACTIVE TEST (DOOR LOCK)

(a) Select the ACTIVE TEST, use the intelligent tester to generate a control command, and then check that the power door lock operates.

Body ECU:

Item	Test Details	Diagnostic Note
DOOR LOCK	Operate door lock motor LOCK / UNLOCK	-

OK:
Door lock is locked / unlocked.

NG	Go to step 2

OK

PROCEED TO NEXT CIRCUIT INSPECTION SHOWN IN PROBLEM SYMPTOMS TABLE

2	INSPECT REAR DOOR LOCK ASSEMBLY RH (DOOR LOCK MOTOR)

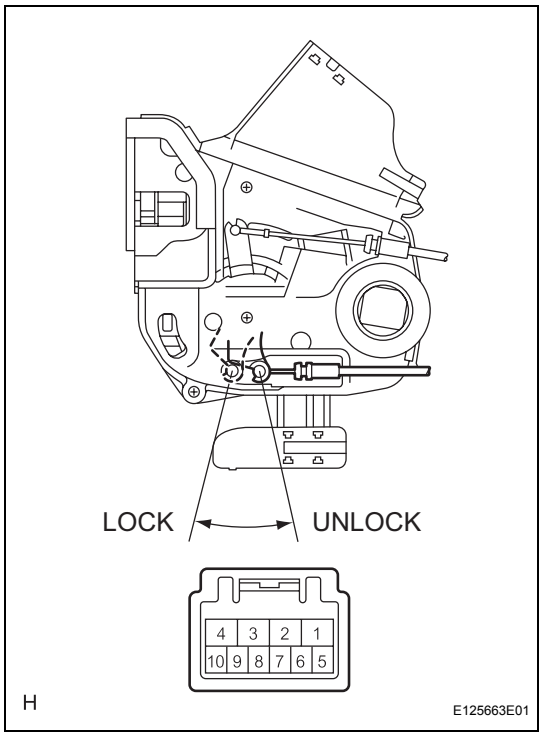

(a) Remove the rear door lock assembly RH.
(b) Apply battery voltage and check operation of the door lock motor.

Voltage

Measurement Condition	Specified Condition
Battery positive (+) → Terminal 4 Battery negative (-) → Terminal 1	Lock
Battery positive (+) → Terminal 1 Battery negative (-) → Terminal 4	Unlock

NG → **REPLACE REAR DOOR LOCK ASSEMBLY RH**

OK

DL

3	CHECK WIRE HARNESS (REAR DOOR LOCK ASSEMBLY RH - INSTRUMENT PANEL J/B)

I5 Front Door Lock Assembly RH:

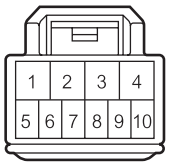

Instrument Panel J/B:

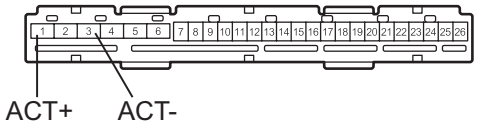

H

E125660E03

(a) Disconnect the I5 connector.
(b) Remove the body ECU from instrument panel J/B.
(c) Measure the resistance of the wire harness side connectors.

Resistance

Tester Connection	Condition	Specified Condition
1 - I5-4 (ACT+)	Always	Below 1 Ω
3 - I5-1 (ACT-)	Always	Below 1 Ω

NG → **REPAIR OR REPLACE HARNESS OR CONNECTOR**

OK

PROCEED TO NEXT CIRCUIT INSPECTION SHOWN IN PROBLEM SYMPTOMS TABLE

DL

Driver Side Door Courtesy Switch Circuit

DESCRIPTION

The door courtesy turns on when the door is opened and turns off when the door is closed.
The body ECU detects the condition of the door courtesy switch.

WIRING DIAGRAM

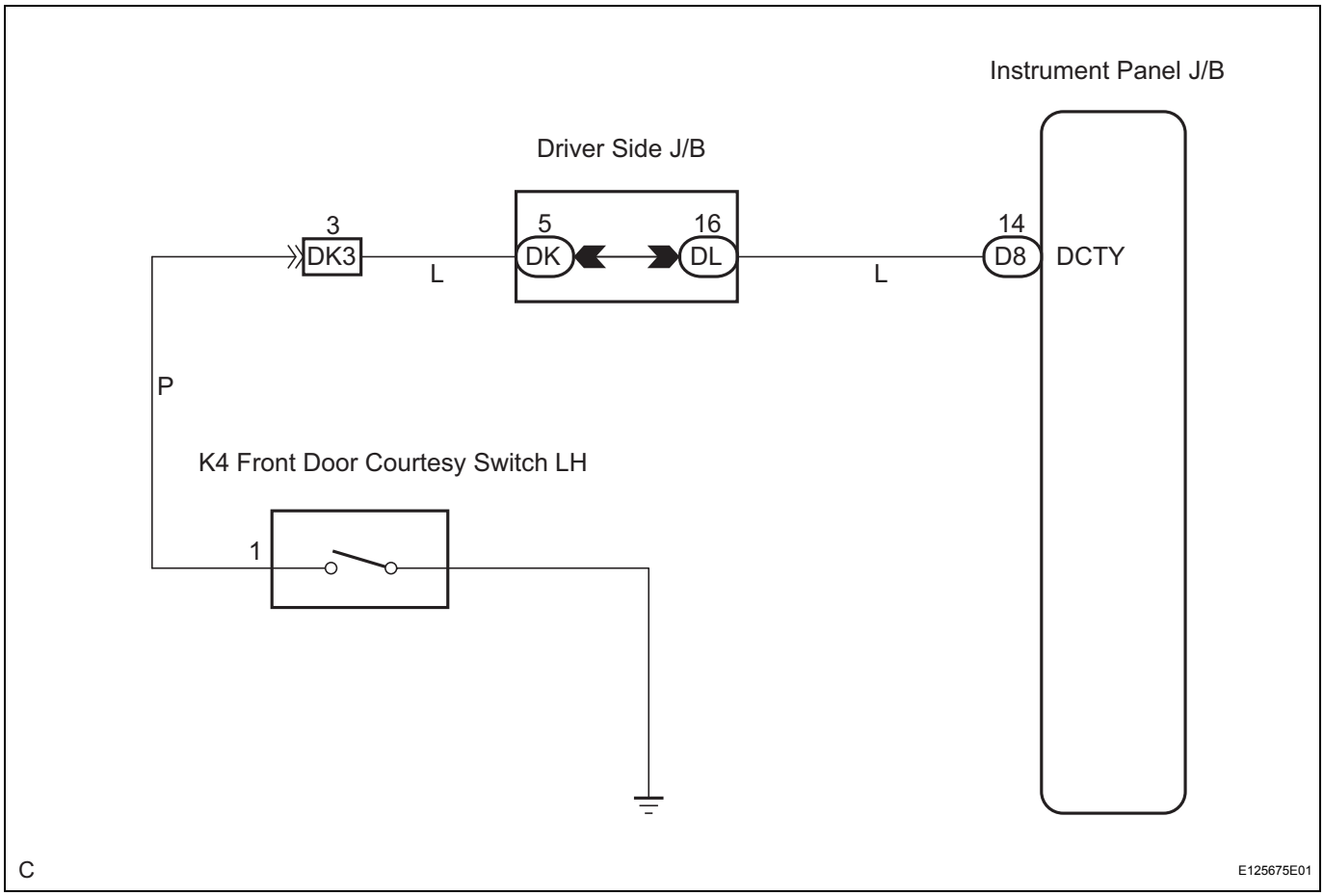

INSPECTION PROCEDURE

1	READ VALUE OF DATA LIST (DOOR COURTESY SWITCH)

(a) Check the DATA LIST for proper functioning of the door courtesy switch.

Body ECU:

Item	Measurement Item / Display (Range)	Normal Condition	Diagnostic Note
D COURTESY SW	Door courtesy switch signal / ON or OFF	ON: Door is open OFF: Door is closed	-

OK:
"ON" (door is open) appears on the screen.

NG	Go to step 2

OK

PROCEED TO NEXT CIRCUIT INSPECTION SHOWN IN PROBLEM SYMPTOMS TABLE

2 INSPECT FRONT DOOR COURTESY SWITCH

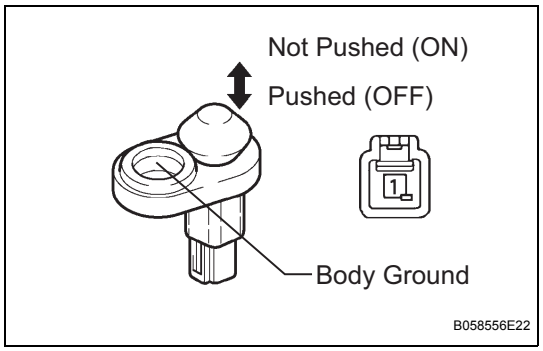

(a) Remove the courtesy switch.
(b) Measure the resistance of the switch.
Resistance

Tester Connection	Switch Condition	Specified Condition
1 - Body ground	Not Pushed (ON)	Below 1 Ω
1 - Body ground	Pushed (OFF)	10 kΩ or higher

NG → **REPLACE FRONT DOOR COURTESY SWITCH**

DL

OK

3 CHECK WIRE HARNESS (FRONT DOOR COURTESY SWITCH LH - INSTRUMENT PANEL J/B)

D8 Instrument Panel J/B:

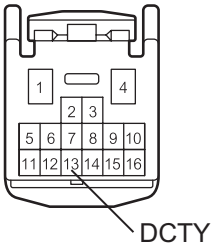

K4 Front Courtesy Switch LH:

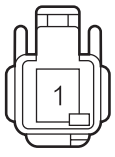

H

E125676E01

(a) Disconnect the D8 and L5 connectors.
(b) Measure the resistance of the wire harness side connectors.
Resistance

Tester Connection	Condition	Specified Condition
D8-14 - K4-1	Always	Below 1 Ω

NG → **REPAIR OR REPLACE HARNESS OR CONNECTOR**

OK

PROCEED TO NEXT CIRCUIT INSPECTION SHOWN IN PROBLEM SYMPTOMS TABLE

Front Passenger Side Door Courtesy Switch Circuit

DESCRIPTION

The door courtesy turns on when the door is opened and turns off when the door is closed.
The body ECU detects the condition of the door courtesy switch.

WIRING DIAGRAM

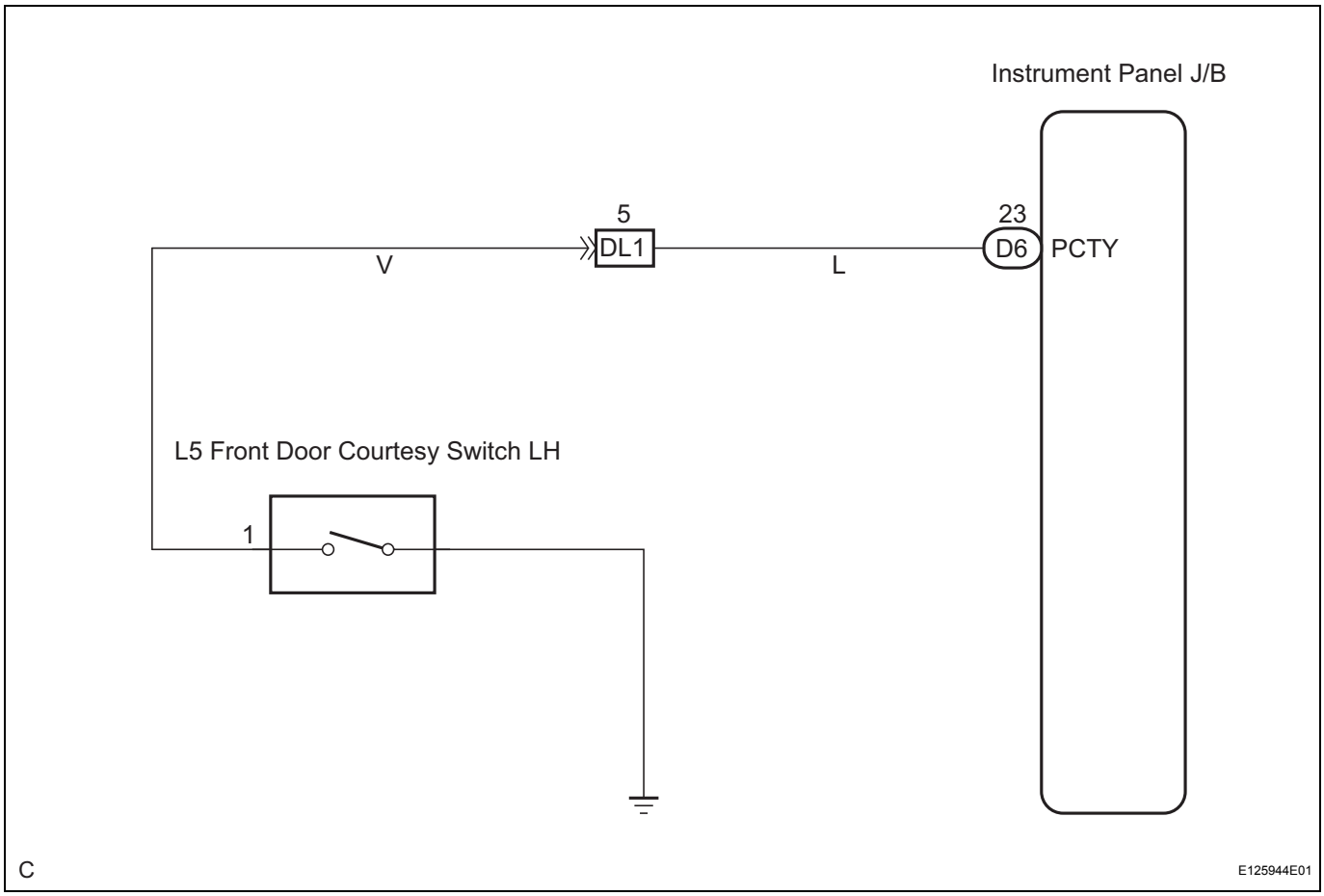

INSPECTION PROCEDURE

1	READ VALUE OF DATA LIST (DOOR COURTESY SWITCH)

(a) Check the DATA LIST for proper functioning of the door courtesy switch.

Body ECU:

Item	Measurement Item / Display (Range)	Normal Condition	Diagnostic Note
P COURTESY SW	Door courtesy switch signal / ON or OFF	ON: Door is open OFF: Door is close	-

OK:
"ON" (door is open) appears on the screen.

NG	Go to step 2

OK

PROCEED TO NEXT CIRCUIT INSPECTION SHOWN IN PROBLEM SYMPTOMS TABLE

2 INSPECT FRONT DOOR COURTESY SWITCH

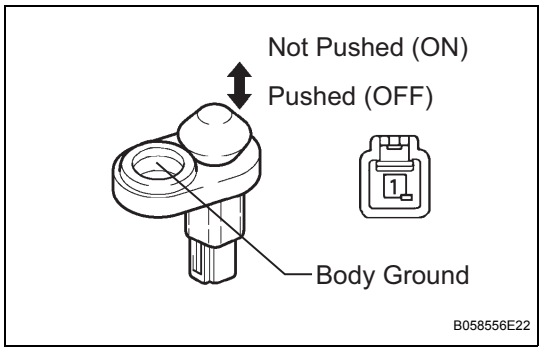

(a) Remove the courtesy switch.
(b) Measure the resistance of the switch.
Resistance

Tester Connection	Switch Condition	Specified Condition
1 - Body ground	Not Pushed (ON)	Below 1 Ω
1 - Body ground	Pushed (OFF)	10 kΩ or higher

NG → **REPLACE FRONT DOOR COURTESY SWITCH**

DL

OK

3 CHECK WIRE HARNESS (FRONT DOOR COURTESY SWITCH RH - INSTRUMENT PANEL J/B)

D6 Instrument Panel J/B:

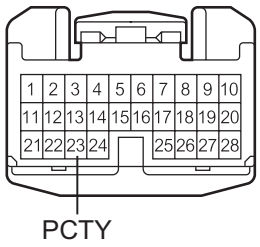

L5 Front Door Courtesy Switch RH:



H

E125945E01

(a) Disconnect the D6 switch and L5 connectors.
(b) Measure the resistance of the wire harness side connectors.
Resistance

Tester Connection	Condition	Specified Condition
D6-26 - L5-1	Always	Below 1 Ω

NG → **REPAIR OR REPLACE HARNESS OR CONNECTOR**

OK

PROCEED TO NEXT CIRCUIT INSPECTION SHOWN IN PROBLEM SYMPTOMS TABLE

Rear Door Courtesy Switch LH Circuit

DESCRIPTION

The door courtesy turns on when the door is opened and turns off when the door is closed.
The body ECU detects the condition of the door courtesy switch.

WIRING DIAGRAM

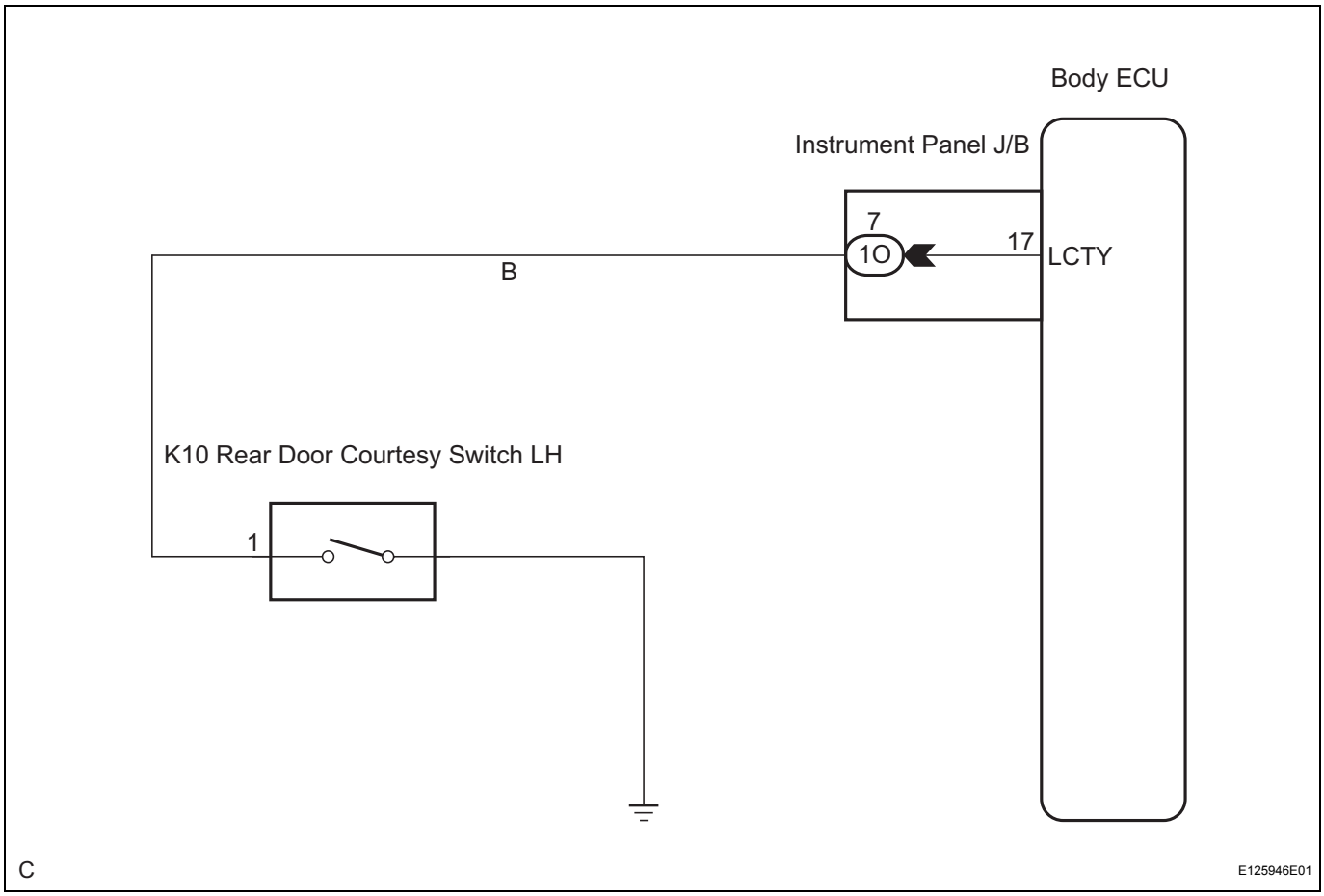

INSPECTION PROCEDURE

1	READ VALUE OF DATA LIST (DOOR COURTESY SWITCH)

(a) Check the DATA LIST for proper functioning of the door courtesy switch.

Body ECU:

Item	Measurement Item / Display (Range)	Normal Condition	Diagnostic Note
Rr COURTESY SW	Door courtesy switch signal / ON or OFF	ON: Door is open OFF: Door is closed	-

OK:
"ON" (door is open) appears on the screen.

NG	Go to step 2

OK

PROCEED TO NEXT CIRCUIT INSPECTION SHOWN IN PROBLEM SYMPTOMS TABLE

2 INSPECT REAR DOOR COURTESY SWITCH

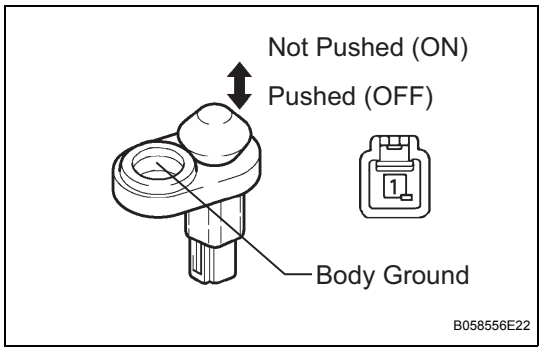

(a) Remove the courtesy switch.
(b) Measure the resistance of the switch.
Resistance

Tester Connection	Switch Condition	Specified Condition
1 - Body ground	Not Pushed (ON)	Below 1 Ω
1 - Body ground	Pushed (OFF)	10 kΩ or higher

NG → **REPLACE REAR DOOR COURTESY SWITCH**

DL

OK

3 CHECK WIRE HARNESS (REAR DOOR COURTESY SWITCH LH - INSTRUMENT PANEL J/B)

INSTRUMENT PANEL J/B:

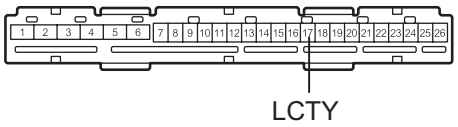

K10 Rear Door Courtesy Switch LH:



(a) Disconnect the K10 and body ECU connectors.
(b) Measure the resistance of the wire harness side connectors.
Resistance

Tester Connection	Condition	Specified Condition
17 - K10-1	Always	Below 1 Ω

NG → **REPAIR OR REPLACE HARNESS OR CONNECTOR**

OK

PROCEED TO NEXT CIRCUIT INSPECTION SHOWN IN PROBLEM SYMPTOMS TABLE

Rear Door Courtesy Switch RH Circuit

DESCRIPTION

The door courtesy turns on when the door is opened and turns off when the door is closed.
The body ECU detects the condition of the door courtesy switch.

WIRING DIAGRAM

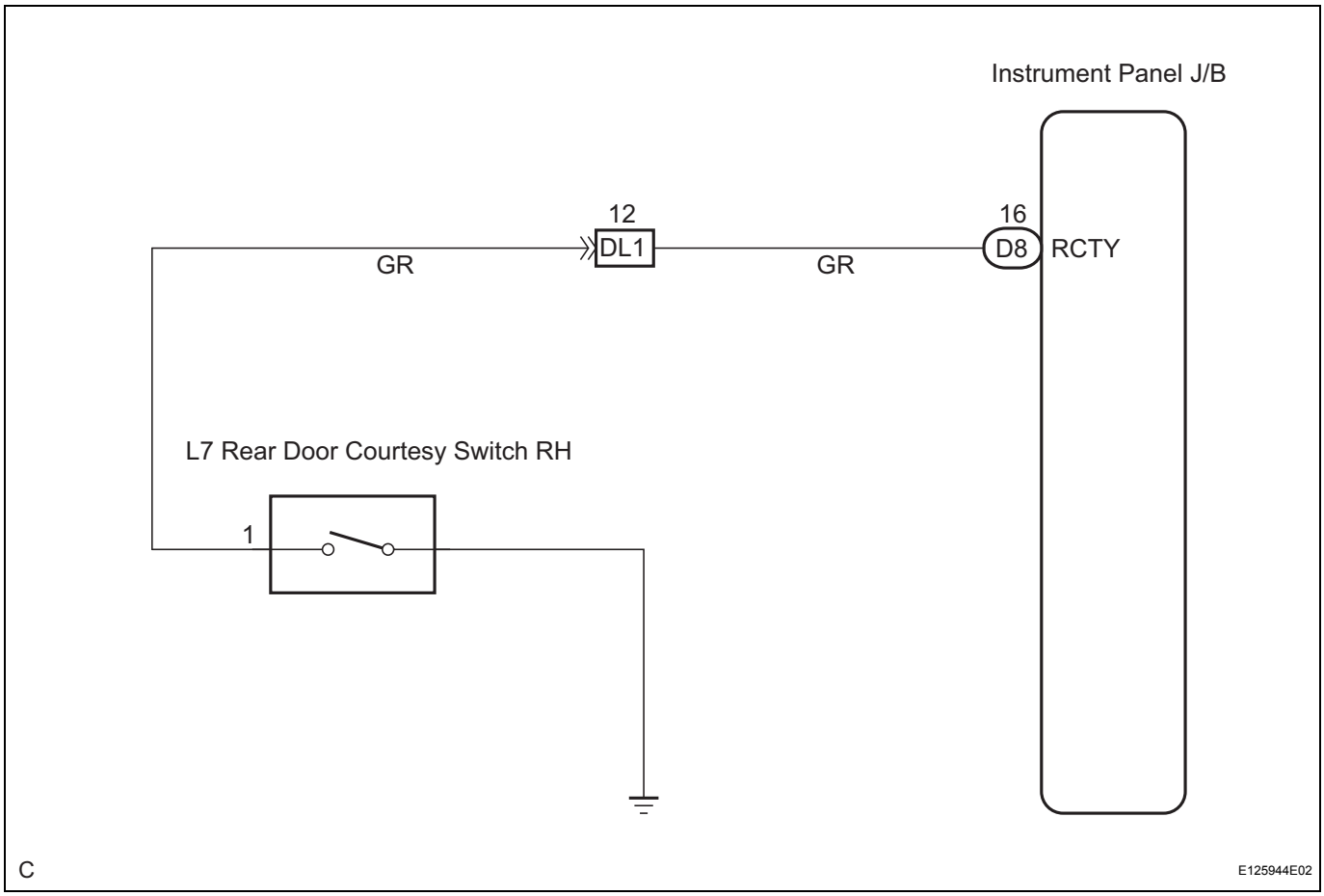

INSPECTION PROCEDURE

1	READ VALUE OF DATA LIST (DOOR COURTESY SWITCH)

(a) Check the DATA LIST for proper functioning of the door courtesy switch.

Body ECU:

Item	Measurement Item / Display (Range)	Normal Condition	Diagnostic Note
Rr COURTESY SW	Door courtesy switch signal / ON or OFF	ON: Door is open OFF: Door is closed	-

OK:
"ON" (door is open) appears on the screen.

NG	Go to step 2

OK

PROCEED TO NEXT CIRCUIT INSPECTION SHOWN IN PROBLEM SYMPTOMS TABLE

2 INSPECT REAR DOOR COURTESY SWITCH

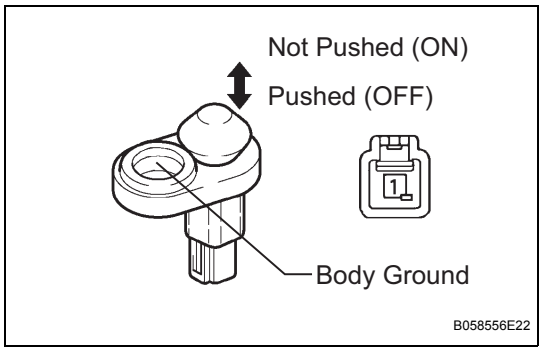

(a) Remove the courtesy switch.
(b) Measure the resistance of the switch.
Resistance

Tester Connection	Switch Condition	Specified Condition
1 - Body ground	Not Pushed (ON)	Below 1 Ω
1 - Body ground	Pushed (OFF)	10 kΩ or higher

NG → **REPLACE REAR DOOR COURTESY SWITCH**

DL

OK

3 CHECK WIRE HARNESS (REAR DOOR COURTESY SWITCH RH - INSTRUMENT PANEL J/B)

D8 Instrument Panel J/B:

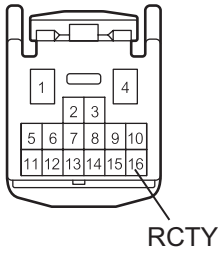

L7 Rear Door Courtesy Switch RH:

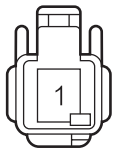

H

E125676E02

(a) Disconnect the D8 and L7 connectors.
(b) Measure the resistance of the wire harness side connectors.
Resistance

Tester Connection	Condition	Specified Condition
D8-16 - L7-1	Always	Below 1 Ω

NG → **REPAIR OR REPLACE HARNESS OR CONNECTOR**

OK

PROCEED TO NEXT CIRCUIT INSPECTION SHOWN IN PROBLEM SYMPTOMS TABLE

Luggage Compartment Door Courtesy Switch Circuit

DESCRIPTION

The door courtesy turns on when the door is open and turns off when the door is closed.
The body ECU detects the condition of the door courtesy switch.

WIRING DIAGRAM

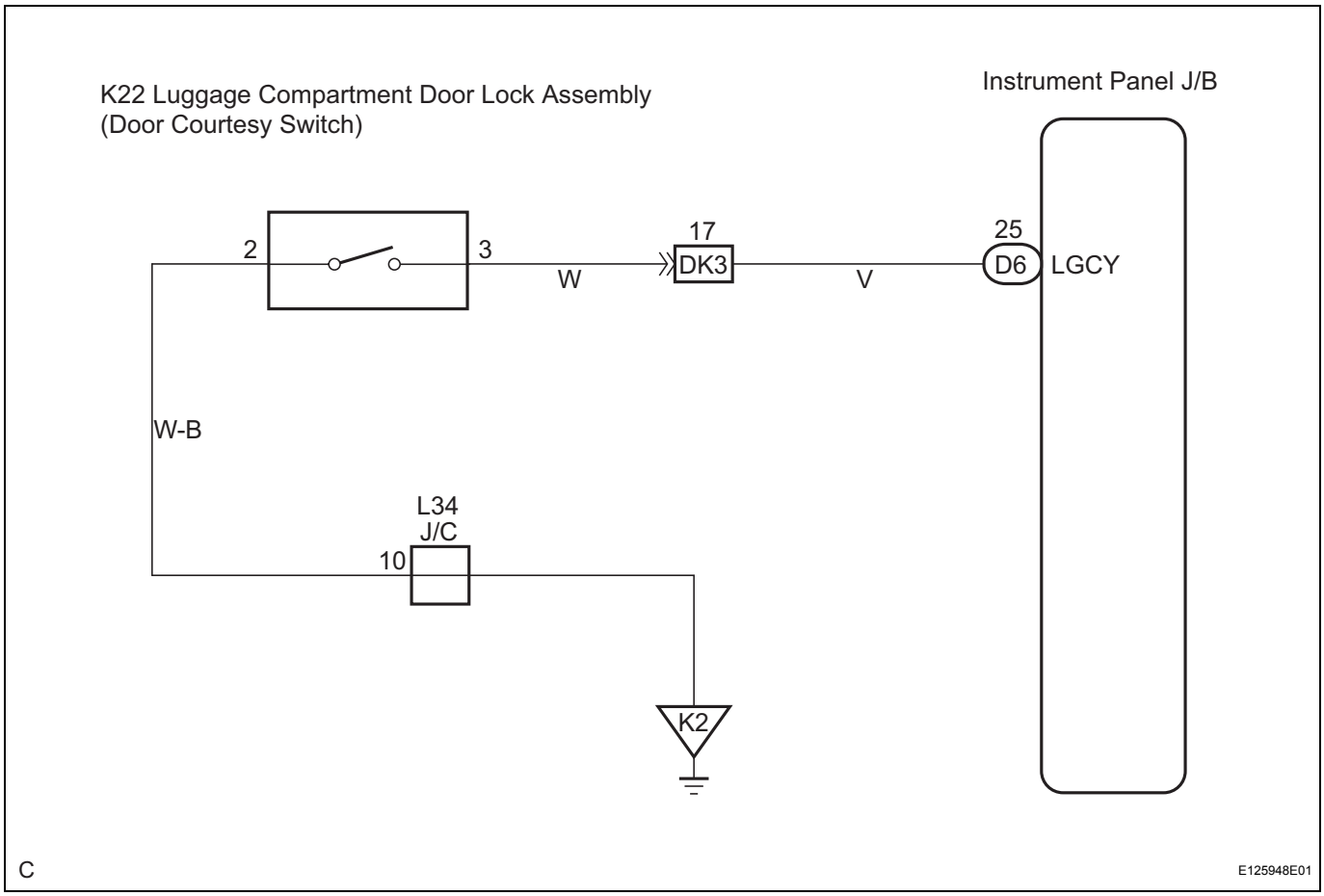

INSPECTION PROCEDURE

1	READ VALUE OF DATA LIST (DOOR COURTESY SWITCH)

(a) Check the DATA LIST for proper functioning of the door courtesy switch.

Body ECU:

Item	Measurement Item / Display (Range)	Normal Condition	Diagnostic Note
LUGG COURTESY	Door courtesy switch signal / ON or OFF	ON: Door is open OFF: Door is closed	-

OK:
"ON" (door is open) appears on the screen.

NG	Go to step 2

OK

PROCEED TO NEXT CIRCUIT INSPECTION SHOWN IN PROBLEM SYMPTOMS TABLE

2	INSPECT LUGGAGE COMPARTMENT DOOR LOCK ASSEMBLY (DOOR COURTESY SWITCH)

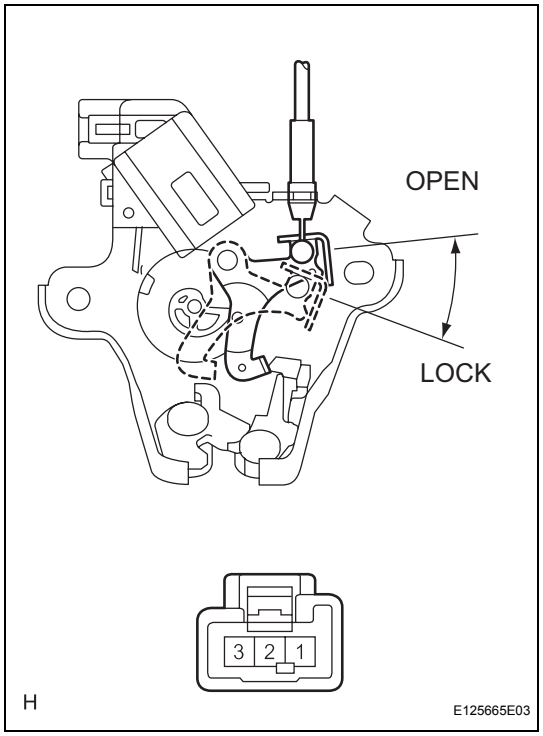

(a) Remove the luggage door lock.
(b) Measure the resistance of the switch.
Resistance

Tester Connection	Switch Condition	Specified Condition
2 - 3	Not Pushed (ON)	Below 1 Ω
2 - 3	Pushed (OFF)	10 kΩ or higher

NG → **REPLACE LUGGAGE COMPARTMENT DOOR LOCK ASSEMBLY**

OK

DL

3	CHECK WIRE HARNESS (LUGGAGE COMPARTMENT DOOR LOCK - INSTRUMENT PANEL J/B)

D6 Instrument Panel J/B:

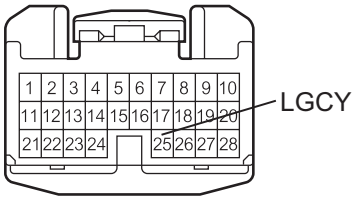

L24 Luggage Compartment Door Lock Assembly (Door Courtesy Switch):

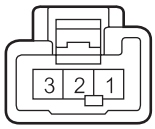

H

E125949E01

(a) Disconnect the D6 and K22 connectors.
(b) Measure the resistance of the wire harness side connectors.

Resistance

Tester Connection	Condition	Specified Condition
D6-25 - K22-3 (LGCY)	Always	Below 1 Ω
K22-2 - Body ground	Always	Below 1 Ω

NG → **REPAIR OR REPLACE HARNESS OR CONNECTOR**

OK

PROCEED TO NEXT CIRCUIT INSPECTION SHOWN IN PROBLEM SYMPTOMS TABLE

Luggage Compartment Door Lock Circuit

DESCRIPTION

The door lock motor is built in the luggage compartment door lock assembly.
The body ECU receives the driver door lock switch signal from the master switch and operates the door lock motor.

WIRING DIAGRAM

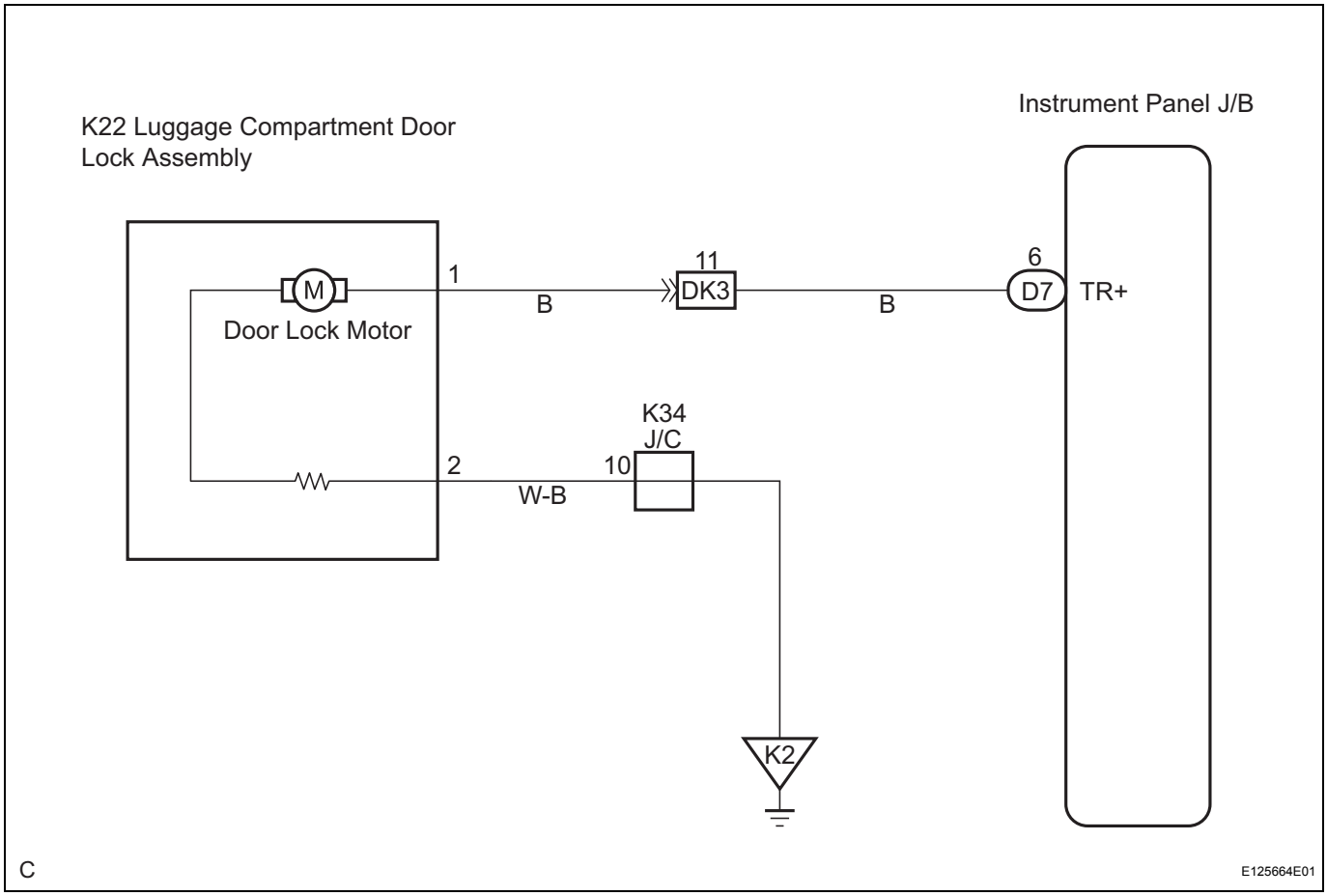

INSPECTION PROCEDURE

1	PERFORM ACTIVE TEST (DOOR LOCK)

(a) Select the ACTIVE TEST, use the intelligent tester to generate a control command, and then check that the power door lock operates.

Body ECU:

Item	Test Details	Diagnostic Note
DOOR LOCK	Operate door lock motor LOCK / UNLOCK	-

OK:

Door lock is locked / unlocked.

NG	Go to step 2

OK

PROCEED TO NEXT CIRCUIT INSPECTION SHOWN IN PROBLEM SYMPTOMS TABLE

2	INSPECT LUGGAGE COMPARTMENT DOOR LOCK ASSEMBLY (DOOR LOCK MOTOR)

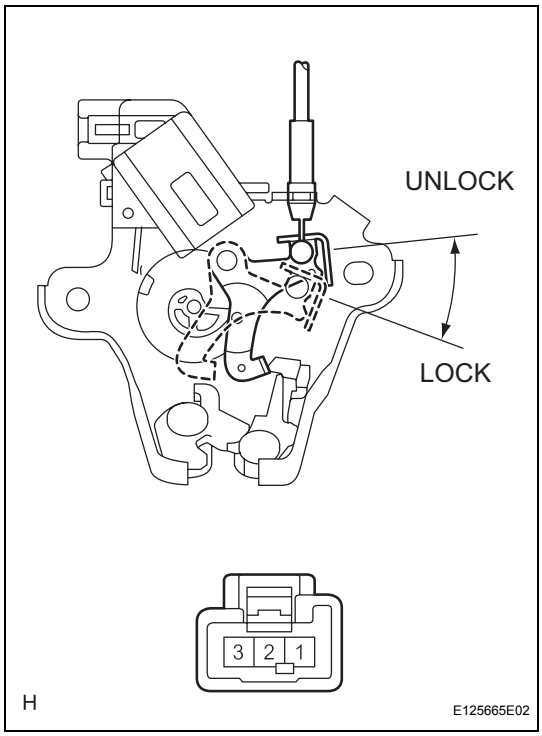

(a) Remove the luggage compartment door lock assembly.
(b) Apply battery voltage and check operation of the door lock motor.

Voltage

Measurement Condition	Specified Condition
Battery positive (+) → Terminal 1 Battery negative (-) → Terminal 2	Unlock
Battery positive (+) → Terminal 2 Battery negative (-) → Terminal 1	Lock

NG → **REPLACE LUGGAGE COMPARTMENT DOOR LOCK ASSEMBLY**

OK

DL

3	CHECK WIRE HARNESS (LUGGAGE COMPARTMENT DOOR LOCK - INSTRUMENT PANEL J/B)

D7 Instrument Panel J/B:

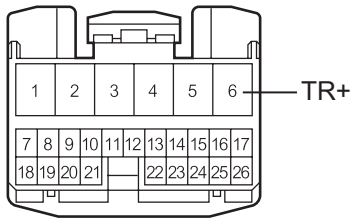

K22 Luggage Compartment Door Lock Assembly:

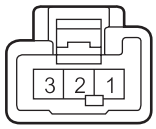

H

E125666E01

(a) Disconnect the D7 and K22 connectors.
(b) Measure the resistance of the wire harness side connectors.

Resistance

Tester Connection	Condition	Specified Condition
D7-6 - K22-1	Always	Below 1 Ω
K22-1 - Body ground	Always	Below 1 Ω

NG → **REPAIR OR REPLACE HARNESS OR CONNECTOR**

OK

PROCEED TO NEXT CIRCUIT INSPECTION SHOWN IN PROBLEM SYMPTOMS TABLE

DL

Door Key Lock / Unlock Switch Circuit

DESCRIPTION

The door lock and unlock switch is built in the door lock assembly.
This switch is ON when the door key is in the unlock position and OFF when the door key is in the lock position. It is used as one of the operating conditions for the key confinement prevention function.

WIRING DIAGRAM

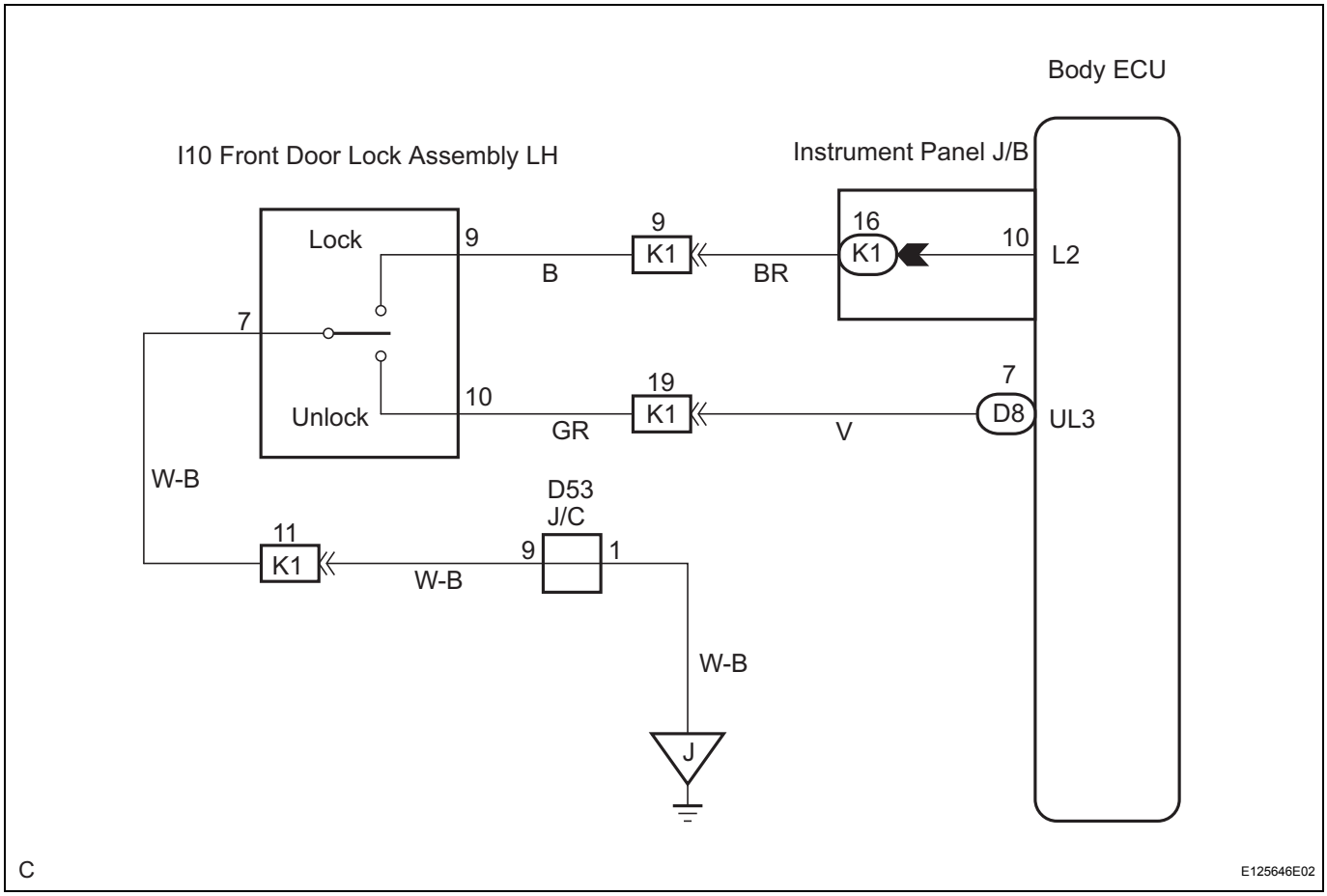

INSPECTION PROCEDURE

1	READ VALUE OF DATA LIST (DOOR KEY LOCK AND UNLOCK SWITCH)

(a) Check the DATA LIST for proper functioning of the door unlock detection switch.

Body ECU:

Item	Measurement Item/Display (Range)	Normal Condition	Diagnostic Note
D DOR KEY SW-UL	Door key lock and unlock switch signal (Driver)/ON or OFF	ON: Door key is unlocked OFF: Door key is locked	-

OK:
"ON" (door key switch is unlocked) appears on the screen.

NG	Go to step 2

OK

PROCEED TO NEXT CIRCUIT INSPECTION SHOWN IN PROBLEM SYMPTOMS TABLE

2 INSPECT FRONT DOOR LOCK ASSEMBLY LH (DOOR KEY LOCK AND UNLOCK SWITCH)

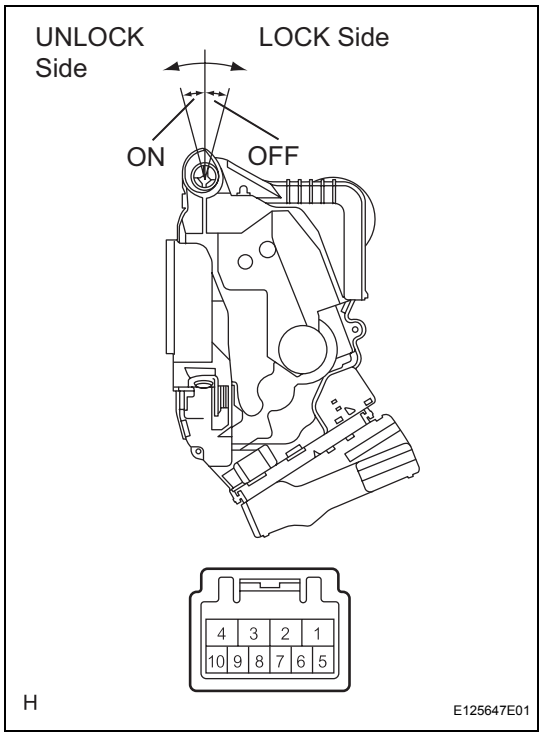

(a) Remove the front door lock assembly LH.
(b) Measure the resistance of the switch when the switch is operated.

Resistance

Tester Connection	Condition	Specified Condition
10 - 7	ON (Door lock set to UNLOCK)	Below 1 Ω
9 - 7	OFF(Door lock set to LOCK)	10 kΩ or higher

NG → **REPLACE FRONT DOOR LOCK ASSEMBLY LH**

OK

DL

3	CHECK WIRE HARNESS (FRONT DOOR LOCK ASSEMBLY LH - INSTRUMENT PANEL J/B)

D8 Instrument Panel J/B:

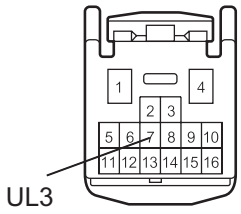

I10 Front Door Lock Assembly LH:

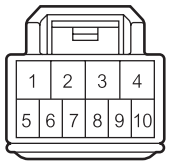

Instrument Panel J/B:

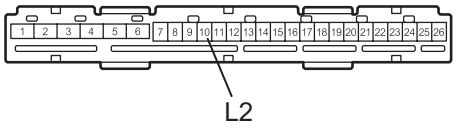

H

E125648E01

(a) Disconnect the D8 and I10 connectors.
(b) Remove the body ECU from instrument panel J/B.
(c) Measure the resistance of the switch when the switch is operated.

Resistance

Tester Connection	Condition	Specified Condition
10 - I10-9	Always	Below 1 Ω
D8-7 - I10-10	Always	Below 1 Ω
D10-7 - Body ground	Always	Below 1 Ω

NG → **REPAIR OR REPLACE HARNESS OR CONNECTOR**

OK

PROCEED TO NEXT CIRCUIT INSPECTION SHOWN IN PROBLEM SYMPTOMS TABLE

Power Source Circuit

DESCRIPTION

This circuit supplies power to operate the body ECU.

WIRING DIAGRAM

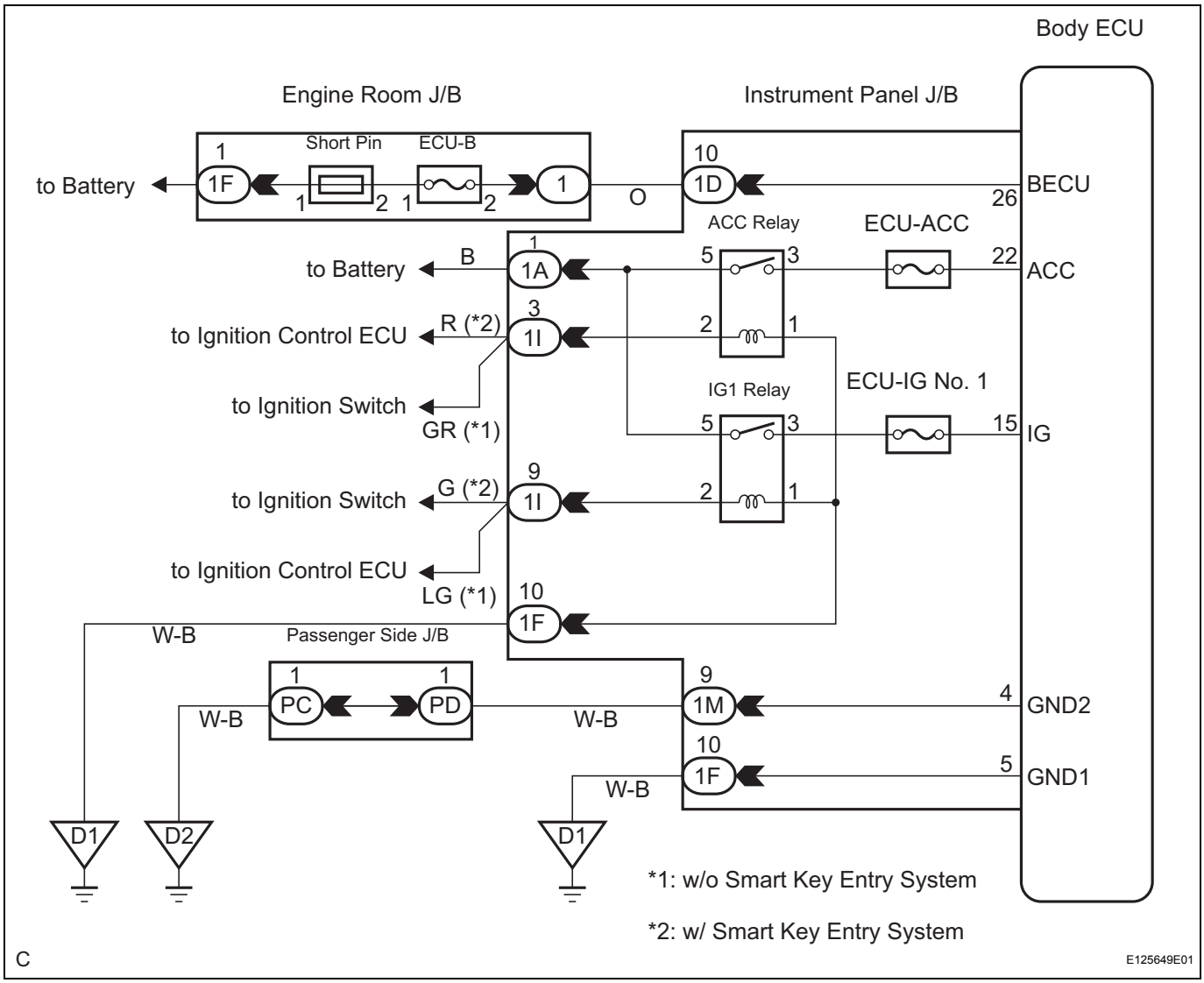

INSPECTION PROCEDURE

1	CHECK WIRE HARNESS (INSTRUMENT PANEL J/B - BATTERY AND BODY GROUND)

Instrument Panel J/B:

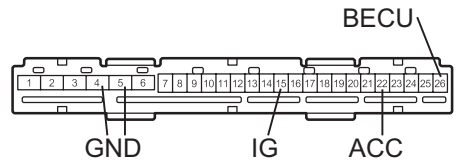

H

E125650E01

(a) Remove the body ECU from instrument panel J/B.

(b) Measure the resistance according to the value(s) in the table below.

Resistance

Tester Connection	Condition	Specified Condition
4, 5 (GND) - Body ground	Always	Below 1 Ω

(c) Measure the voltage according to the value(s) in the table below.

Voltage

Tester Connection	Condition	Specified Condition
26 (BECU) - Body ground	Always	10 to 14 V
22 (ACC) - Body ground	Ignition switch ACC	10 to 14 V
15 (IG) - Body ground	Ignition switch on (IG)	10 to 14 V

DL

NG → **REPAIR OR REPLACE HARNESS OR CONNECTOR**

OK

PROCEED TO NEXT CIRCUIT INSPECTION SHOWN IN PROBLEM SYMPTOMS TABLE

WIRELESS DOOR LOCK CONTROL SYSTEM

PRECAUTION

NOTICE:
If either battery terminal is disconnected, the following systems must be initialized after the terminal is reconnected.

System Name	See Procedure
Power window control system	IN-29
Sliding roof system	

1. FUNCTIONS AND OPERATING CONDITIONS

(a) Power door lock/unlock function:
This wireless door lock control function operates only when the following 4 conditions are met:
(1) There is no key in the ignition key cylinder.
(2) All the doors are closed.
(3) The power door lock system is functioning normally.
(4) The function is not disabled by customization.
HINT:
The unlock function operates even when any of the doors are open.

(b) Remote panic function:
This wireless control function operates only when the following condition is met:
(1) The ignition switch is off.
HINT:
The key can be inserted. However the ignition switch must be turned off.

(c) The wireless transmitter operational range differs depending on the situation.
(1) The operational range differs depending on the user, the way the transmitter is held and the location.
(2) In certain areas, the operational range will be reduced due to the vehicle body shape and the influence of the surrounding environment.
(3) Since the transmitter uses weak radio waves, the operational range may be reduced or the transmitter may not function if interference or stronger radio waves occur in the area where the transmitter is used.
(4) When the battery is low, the operational range is reduced and/or the transmitter may not function.
HINT:
If the transmitter has been left in a place that is exposed to direct sunlight, such as on the instrument panel, the battery may be weakened or other problems may occur.

PARTS LOCATION

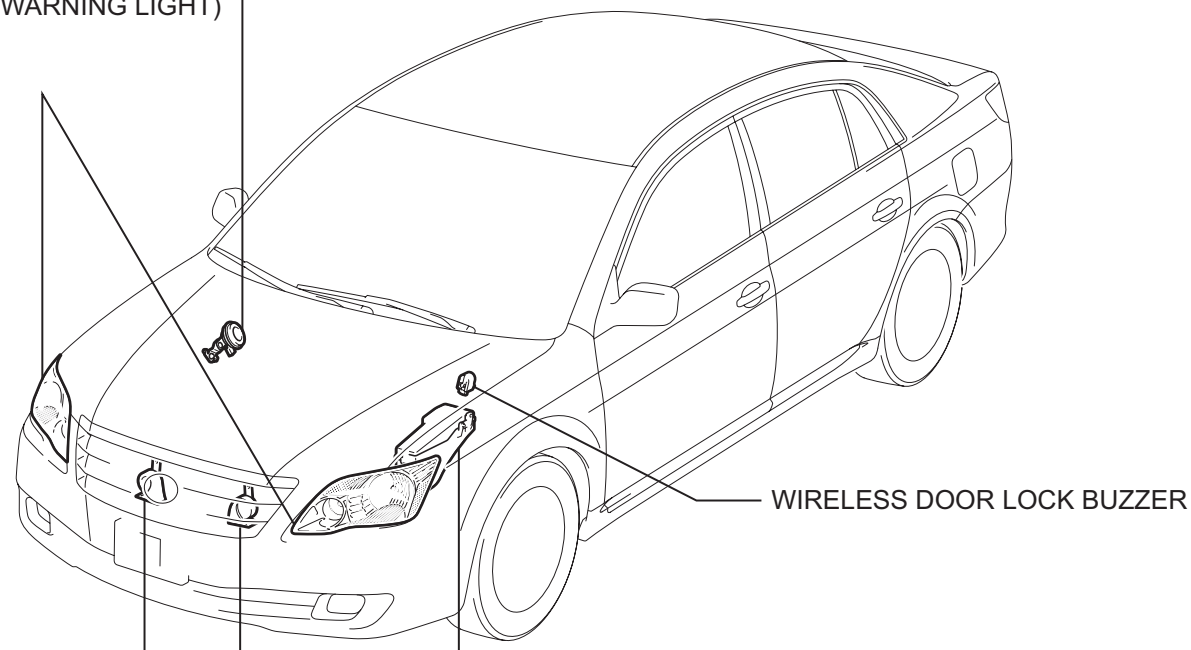

P

B115068E01

DL

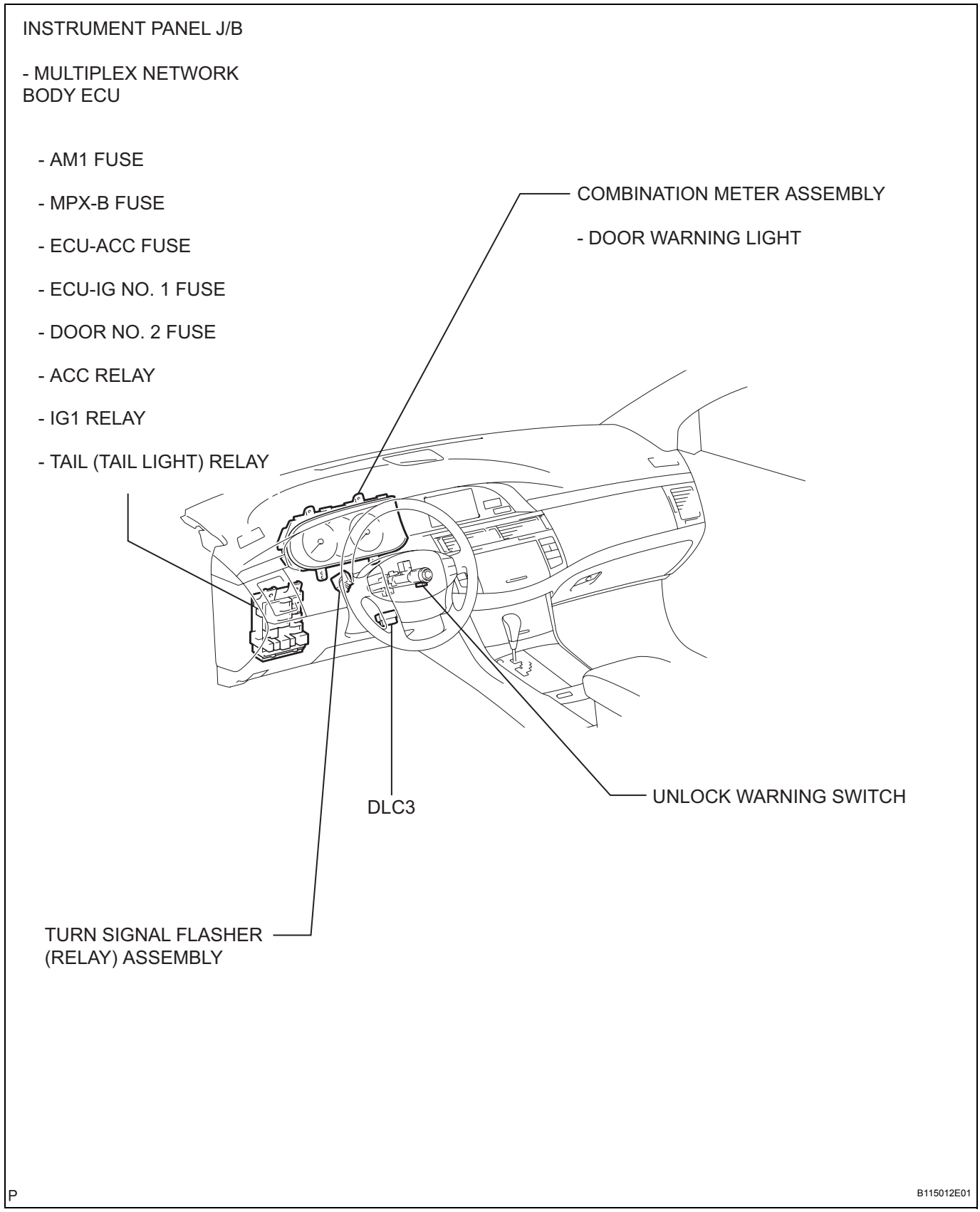
INSTRUMENT PANEL J/B
- MULTIPLEX NETWORK BODY ECU
- AM1 FUSE
- MPX-B FUSE
- ECU-ACC FUSE
- ECU-IG NO. 1 FUSE
- DOOR NO. 2 FUSE
- ACC RELAY
- IG1 RELAY
- TAIL (TAIL LIGHT) RELAY
COMBINATION METER ASSEMBLY
- DOOR WARNING LIGHT
DLC3
UNLOCK WARNING SWITCH
TURN SIGNAL FLASHER (RELAY) ASSEMBLY
P
B115012E01

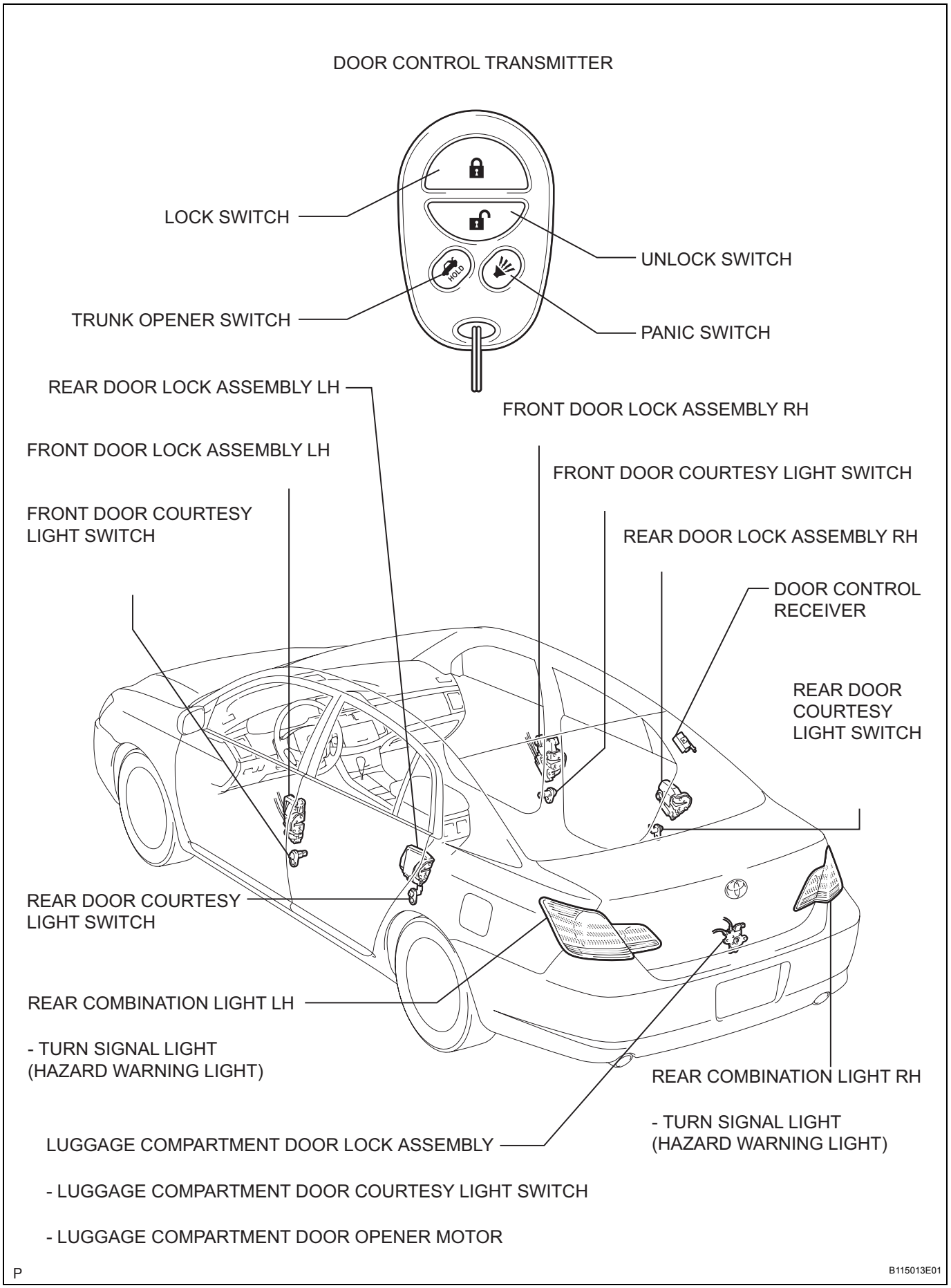
DOOR CONTROL TRANSMITTER
LOCK SWITCH
UNLOCK SWITCH
TRUNK OPENER SWITCH
PANIC SWITCH
HOLD
REAR DOOR LOCK ASSEMBLY LH
FRONT DOOR LOCK ASSEMBLY RH
FRONT DOOR LOCK ASSEMBLY LH
FRONT DOOR COURTESY LIGHT SWITCH
FRONT DOOR COURTESY LIGHT SWITCH
REAR DOOR LOCK ASSEMBLY RH
DOOR CONTROL RECEIVER
REAR DOOR COURTESY LIGHT SWITCH
REAR DOOR COURTESY LIGHT SWITCH
REAR COMBINATION LIGHT LH
- TURN SIGNAL LIGHT (HAZARD WARNING LIGHT)
REAR COMBINATION LIGHT RH
- TURN SIGNAL LIGHT (HAZARD WARNING LIGHT)
LUGGAGE COMPARTMENT DOOR LOCK ASSEMBLY
- LUGGAGE COMPARTMENT DOOR COURTESY LIGHT SWITCH
- LUGGAGE COMPARTMENT DOOR OPENER MOTOR
P
B115013E01

DL

SYSTEM DIAGRAM

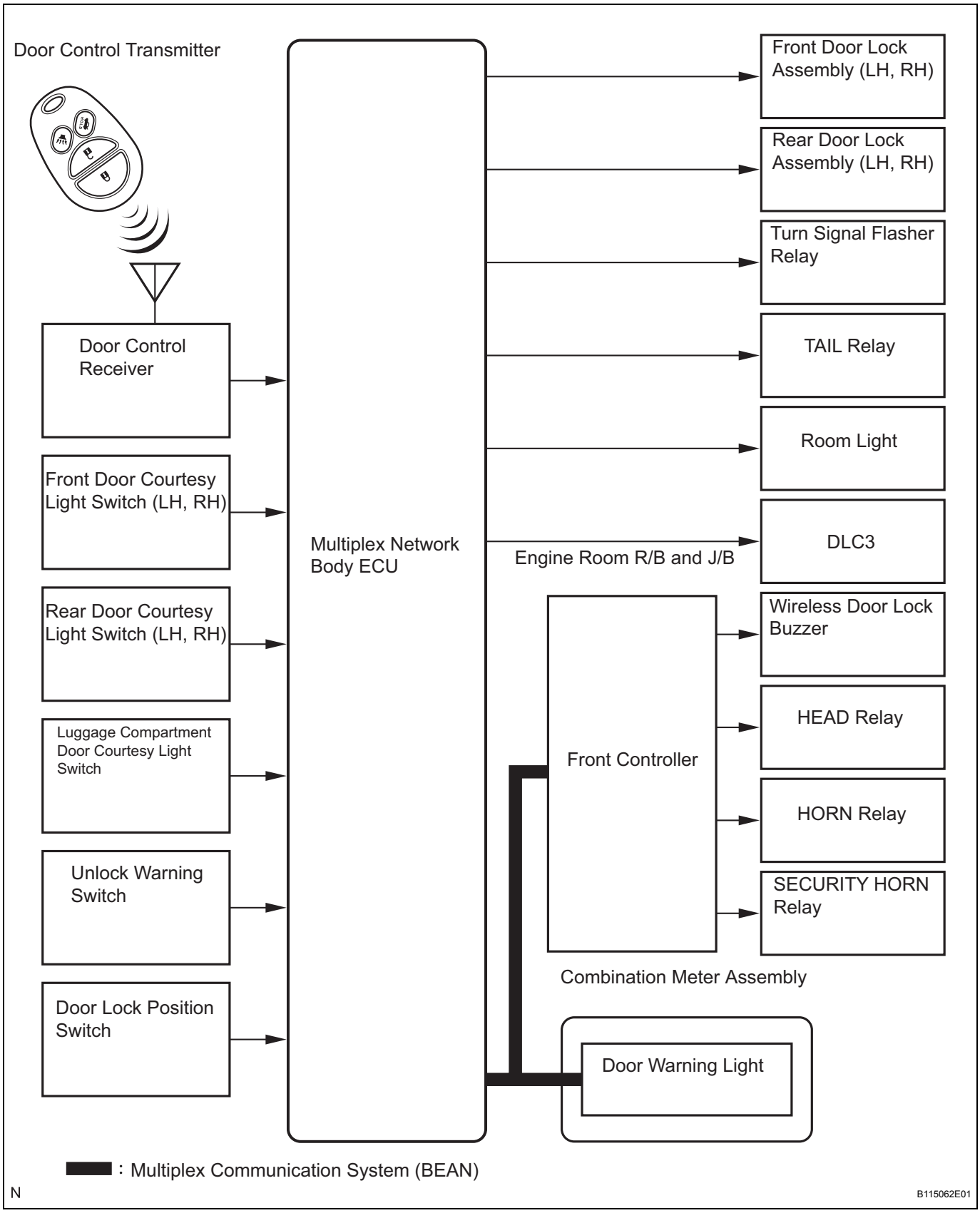

Transmitting ECU (Transmitter)	Receiving ECU	Signals	Communication Method
Multiplex network body ECU	Front controller	• Wireless door lock buzzer drive (answer back) signal • Headlight drive (panic alarm) signal • Horn drive (panic alarm) signal • Security horn drive (panic alarm) signal	Multiplex communication system
Multiplex network body ECU	Combination meter	Door warning light ON signal	Multiplex communication system

SYSTEM DESCRIPTION

1. WIRELESS DOOR LOCK CONTROL SYSTEM

(a) The wireless door lock control system functions to lock and unlock all the doors from a distance. The system is controlled by an intelligent transmitter which sends radio waves to the door control receiver. The multiplex network body ECU performs an ID code identification process and engages the door lock control.

2. FUNCTION OF MAIN COMPONENTS

Component	Function
Door control transmitter	• Has lock, unlock, panic and trunk opener switches. • Transmits weak radio waves (recognition codes and function codes) to the door control receiver. • Illuminates the indicator light (LED) during transmission.
Door control receiver	Receives weak radio waves (recognition codes and function codes) and outputs them as code data to the multiplex network body ECU.
• Front door courtesy light switch • Rear door courtesy light switch • Luggage compartment door courtesy light switch	Turns on when a door is open and turns off when it is closed. Outputs door status codes (open or closed) to the multiplex network body ECU.
Unlock warning switch	Detects if the key is inserted in the ignition switch or not.
Door lock position switch	Transmits the door lock positions of each door to the multiplex network body ECU.
Wireless door lock buzzer	Emits beep (answer back) when doors are locked or unlocked.
Multiplex network body ECU	Sends wireless door lock control signals in response to the code data from the door control receiver and signals from each switch.

3. SYSTEM FUNCTION

(a) The door control transmitter has lock, unlock, panic and trunk opener switches. Operating these switches activates each function.
The wireless door lock control system has the following functions:

Function	Operation
All door lock	Pressing the lock switch of the transmitter locks all doors.
All door unlock	Pressing the unlock switch of the transmitter unlocks all doors.
All door unlock (2-step unlock)	Pressing the unlock switch of the transmitter once unlocks the driver's door, and pressing it again within 3 seconds unlocks all the doors.
Panic alarm	Pressing the panic switch of the transmitter for longer than about 0.8 seconds causes the following alarms to activate: • Sounds the vehicle horn and security horn. • Flashes the hazard warning lights, headlights, and tail lights. • Illuminates the room light when the switch is in the DOOR position.
Automatic lock	If none of the doors is opened within 30 seconds after they are unlocked by the wireless door lock control, all the doors will lock again automatically.
Door ajar warning	If any door is open or ajar, pressing the lock switch of the transmitter will cause the wireless door lock buzzer to sound for about 10 seconds.
Illuminated entry	When all the doors are locked, pressing the unlock switch causes the room lights to illuminate simultaneously with the unlock operation.
Repeat	If a door is not locked in response to the locking operation of the transmitter, the body ECU will output a lock signal after 1 second.
Answer back	• The hazard warning light flashes once when locking, and flashes twice when unlocking, to signal that the operation has been completed. • When the transmitter is used to lock or unlock the doors, this function sounds the wireless door lock buzzer to signal that the operation has been completed.
Trunk opener	Keeping the trunk opener switch of the transmitter pressed for longer than about 0.8 seconds opens the trunk.

Function	Operation
Security	Sends an operation signal as a rolling code.
Self-diagnostic mode	The following are ways to enter the self-diagnostic mode. • If the door control receiver receives normal radio waves from the door control transmitter when the system is in diagnostic mode, it sounds the wireless door lock buzzer in a normal pattern that corresponds to the function of each switch. • Short terminals TC and CG of the DLC3 with the SST check wire. • Read DTCs with the intelligent tester.
Buzzer cancel	The wireless door lock buzzer can be turned ON/OFF by operating the ignition switch or any of the door control transmitter switches.
Transmitter recognition code registration	Enables the registration (writing and storing) of 4 types of transmitter recognition codes in the EEPROM that is contained in the body ECU.

4. TRANSMITTER RECOGNITION CODE REGISTRATION FUNCTION

(a) The table below shows the 4 ID registration function modes by which up to 4 different codes can be registered. The codes are electronically registered (written and stored) in the EEPROM that is contained in the multiplex network body ECU.

Mode	Function
Add mode	Adds a newly received code while preserving any previously registered codes. The mode is used when adding a new transmitter. If the number of codes exceeds 4, the oldest registered code is erased first.
Rewrite mode	Erases all previously registered codes and registers only newly input codes.
Confirmation mode	Confirms how many codes are currently registered. When adding a new code, this mode is used to check how many codes already exist.
Prohibition mode	Deletes all the registered codes and disables the wireless door lock function. This mode is used when the transmitter is lost.

5. OPERATION OF INTERLOCK FUNCTION

(a) Lock operation is not available when:
- Any of the doors is open.
- The key is inserted in the ignition switch.

(b) Unlock operation is not available when:
- The key is inserted in the ignition switch.

(c) Trunk opener operation is not available when:
- The key is inserted in the ignition switch.

HOW TO PROCEED WITH TROUBLESHOOTING

HINT:

- The wireless door lock control system troubleshooting procedures are based on the premise that the power door lock control system is operating normally. Check the power door lock control system first before troubleshooting the wireless door lock control system.
  Use this procedure to troubleshoot the wireless door lock control system.
- The intelligent tester can be used at steps 4 ,5, 8, 11 and 14.

1	VEHICLE BROUGHT TO WORKSHOP

NEXT

2	CUSTOMER PROBLEM ANALYSIS

(a) Interview and confirm the trouble.

NEXT

3	PROBLEM SYMPTOM CONFIRMATION

NEXT

4	CHECK BODY MULTIPLEX COMMUNICATION SYSTEM

(a) Check for output DTCs (See page MP-23).
HINT:
The ECM of this system is connected to the multiplex communication system. Therefore, before starting troubleshooting, make sure to check that there is no trouble in the multiplex communication system.

⇨	**MULTIPLEX SYSTEM DTC IS OUTPUT: PROCEED TO MULTIPLEX COMMUNICATION SYSTEM**
⇨	**NO MULTIPLEX SYSTEM DTC: GO TO STEP 5**

5	DTC CLEAR

HINT:
See page MP-23

NEXT

6	PROBLEM SYMPTOM SIMULATION

→ SYMPTOM DOES NOT OCCUR: GO TO STEP 7

→ SYMPTOM OCCURS: GO TO STEP 8

7	SYMPTOM SIMULATION

NEXT

8	DTC CHECK (OTHER THAN MULTIPLEX SYSTEM DTC)

HINT:
See page DL-82

→ DTC IS OUTPUT: GO TO STEP 9

→ NO DTC: GO TO STEP 10

9	DTC CHART

HINT:
See page DL-86

NEXT

GO TO STEP 11

10	PROBLEM SYMPTOMS TABLE

HINT:
See page DL-76

NEXT

11	CIRCUIT INSPECTION

NEXT

12	IDENTIFICATION OF PROBLEM

NEXT

13	ADJUSTMENT, REPAIR OR REPLACEMENT

NEXT

14	CONFIRMATION TEST

NEXT

DL

END

REGISTRATION

HINT:

- Register the recognition code if the door control transmitter or the door control receiver has been replaced.
- Add mode is used to register new recognition codes while still retaining codes already registered. This mode is used when a new transmitter is added. If the number of registered codes exceeds 4, the previously registered codes will be erased in order, starting from the oldest registered code.
- Rewrite mode is used to erase all the previously registered recognition codes in order to register all new recognition codes. This mode is used when the transmitter or the door control receiver is exchanged for a new one.
- Confirmation mode is used to confirm the number of recognition codes already registered before another recognition code is registered.
- Prohibition mode is used to erase all the registered codes and disable the wireless door lock function. This mode is used when the transmitter is lost.
- All the following registration procedures must be performed in order.

1. REGISTER RECOGNITION CODE USING INTELLIGENT TESTER

(a) Turn the ignition switch to the on (IG) position.

(b) Select the add or rewrite mode according to the intelligent tester display.

(c) The number of registered codes is indicated.

(d) Registration of the door control transmitter.

(1) If the add mode or rewrite mode has been selected, press LOCK and UNLOCK on the transmitter simultaneously.

(2) Press either of the switches on the door control transmitter again.

HINT:

The second operation must be performed within 3 seconds after the first operation.

(3) The body ECU automatically performs the power door LOCK-UNLOCK operation after the switch on the door control transmitter is turned off, in order to indicate whether registration has been completed correctly or not.

Response to Registration Completion

LOCK-UNLOCK Occurs Once:

Registration of recognition code has been completed.

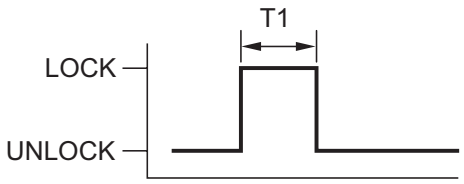

LOCK-UNLOCK Occurs Twice:

Registration of recognition code has failed.

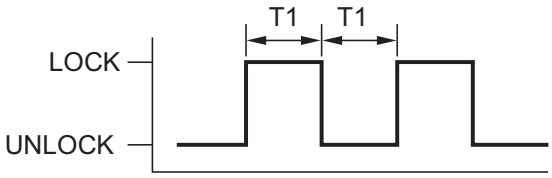

T1: Approx. 1 second

N B110067E03

HINT:
If the LOCK-UNLOCK operation is performed twice, registration of the recognition code has failed. Perform registration procedures from the beginning once again.

(4) If registration is continued, the next recognition code must be registered in the door control transmitter within 40 seconds.
HINT:
Up to four recognition codes can be registered.

(e) Completing the registration mode.
(1) The registration mode will cease when any of the following occurs:
- The intelligent tester is used to order completion.
- The intelligent tester is disconnected.

(f) Perform the following after registration is completed.
(1) Perform the wireless door lock control operation check (See page DL-86).
HINT:
If the wireless door lock control does not operate, perform the registration procedure again.

2. REGISTER RECOGNITION CODE MANUAL OPERATION

(a) Ensure that the following conditions are met:
(1) No key is in the ignition key cylinder.
(2) Driver side door is open (Other doors are closed).
(3) Driver side door is unlocked.

(b) When the above conditions are met, perform the following:

(1) Insert and remove the key from the ignition key cylinder twice. (End in remove) (Procedure A)
HINT:
Complete this step within 5 seconds.

(2) Close and open the driver side door twice. (End in open) (Procedure B)

(3) Insert and remove the key from the ignition key cylinder. (Procedure C)

(4) Close and open the driver side door twice. (End in open) (Procedure D)

(5) Insert the key into the ignition key cylinder and close all doors. (Procedure E)
HINT:
Complete the Procedure B through E within 40 seconds.

(6) Turn the ignition switch from the on (IG) to the off position at approximately 1 second intervals according to the number of times shown below. (Procedure F)

Number of on (IG)-off Operations of the Ignition Switch

Add Mode:

on (IG)-off operation: 1 time

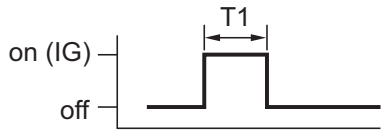

Confirmation Mode:

on (IG)-off operation: 3 times

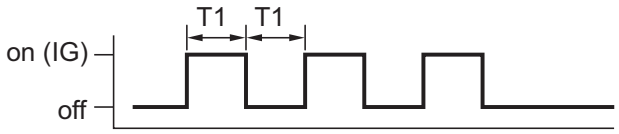

Rewrite Mode:

on (IG)-off operation: 2 times

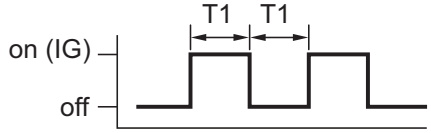

Prohibition Mode:

on (IG)-off operation: 5 times



T1: Approx. 1 second

N B110068E05

HINT:
If the number of on (IG)-off operations of the ignition switch is 0, 4 or 6 or more, there will be no response (power door lock and unlock operation) to show which mode has been selected.

(7) Remove the key from the ignition key cylinder. (Procedure G)
HINT:
Complete the Procedure F and G within 40 seconds.

(8) The body ECU automatically performs the power door LOCK-UNLOCK operation within 3 seconds after the mode has been selected and informs the technician of the selected mode using the following response patterns.

Response to a Selected Mode (Power Door Lock Operation)

Add Mode:

LOCK-UNLOCK operation: 1 time

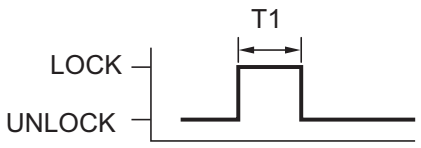

Confirmation Mode:

LOCK-UNLOCK operation: The number of registered codes (1 - 5 times)

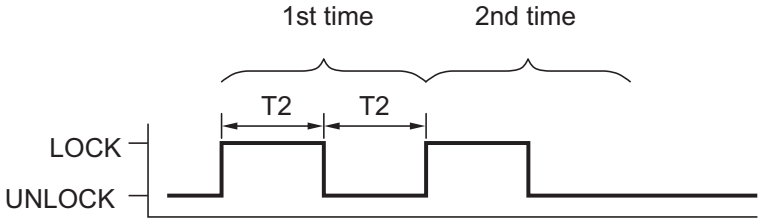

Rewrite Mode:

LOCK-UNLOCK operation: 2 times

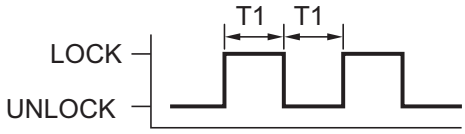

Prohibition Mode:

LOCK-UNLOCK operation: 5 times



T1: Approx. 1 second T2: Approx. 2 seconds

N B110069E02

HINT:

- When the confirmation mode or prohibition mode has been selected, the registration procedure will be completed.
- In the confirmation mode, when the LOCK-UNLOCK operation is performed twice, the number of registered recognition codes is 2.
- In the confirmation mode, when 0 codes are registered, the LOCK-UNLOCK operation is automatically performed 5 times.

(c) Registration of the door control transmitter.

(1) If the add mode or rewrite mode has been selected, press LOCK and UNLOCK on the transmitter simultaneously.

(2) Press either of the switches on the door control transmitter again.

HINT:

- The second operation must be performed within 3 seconds after the first operation.
- A recognition code must be registered in the door control transmitter within 40 seconds after a selected mode is responded to.

(3) The body ECU automatically performs the power door LOCK-UNLOCK operation within 3 seconds after the switch on the door control transmitter is turned off, in order to indicate whether registration has been completed correctly or not.

Response to Registration Completion

LOCK-UNLOCK Occurs Once:

Registration of recognition code has been completed.

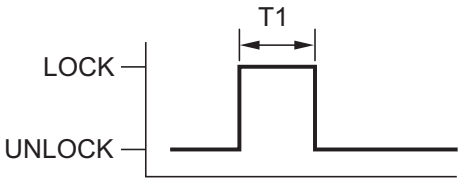

LOCK-UNLOCK Occurs Twice:

Registration of recognition code has failed.

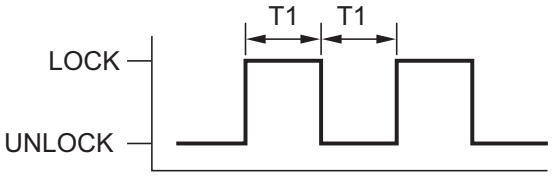

T1: Approx. 1 second

N

B110067E03

HINT:
If the LOCK-UNLOCK operation is performed twice, registration of the recognition code has failed. Perform registration procedures from the beginning once again.

(4) If registration is continued, the next recognition code must be registered in the door control transmitter within 40 seconds.
HINT:
Up to four recognition codes can be registered.

(d) Completing the registration mode.
(1) The registration mode will cease when any of the following occurs:
- Any of the doors is opened.
- The key is inserted into the ignition key cylinder.

(e) Perform the following after registration is completed.
(1) Perform the wireless door lock control operation check (See page DL-86).
HINT:
If the wireless door lock control does not operate, perform the registration procedure again.

DL

CUSTOMIZE PARAMETERS

HINT:
The following items can be customized.
NOTICE:

- **When the customer requests a change in a function, first make sure that customization of the function(s) is possible.**
- **Be sure to record the current settings before customizing.**
- **When troubleshooting a function, first make sure that the function is not set to OFF.**

Display (item)	Default	Function	Setting
OPEN DOOR WARN (Open door warning)	ON	If any door is not completely closed and transmitter lock switch is pressed, this function sounds buzzer for 10 seconds.	ON/OFF
WIRELESS OPER (Wireless door lock control function)	ON	Function that turns wireless door lock function ON/OFF.	ON/OFF
ALARM FUNCTION (*1) (Panic function)	ON	Function that operates theft deterrent system when transmitter panic switch on transmitter is pressed and held for 2.5 seconds.	ON/OFF
UNLOCK/2OPER (Wireless unlock operated twice)	ON	Function that unlocks driver side door when unlock switch on transmitter is pressed once, and unlocks all doors when pressed twice. if setting is OFF, pressing unlock switch once makes all doors unlock.	ON/OFF
AUTO LOCK DELAY (Auto lock time)	30 s	This function regulates the interval between unlocking and automatic relocking of doors.	30 s/60 s
WIRLS BUZZ RESP (Buzzer answer-back for wireless door lock control)	ON	Function that sounds wireless door lock buzzer for answer-back when lock/unlock switch on transmitter is pressed.	ON/OFF
HAZARD ANS BACK (Hazard answer-back for wireless door lock control)	ON	When lock switch on transmitter is pressed, this function blinks all hazard warning lights once. When unlock switch is pressed, all hazard warning lights blink twice.	ON/OFF
TRUNK LID OPER (Wireless trunk opener function setting)	0.8 s PR	Changes operation method of transmitter to open trunk.	1 TIME/2 TIMES/0.8 s PR/OFF

(*1): This function cannot be turned on or off if the security system is turned off.

PROBLEM SYMPTOMS TABLE

If a normal system code is displayed during the DTC check, but the problem still occurs, check the circuits for each problem symptom in the order given in the table below and proceed to the relevant troubleshooting page.

HINT:

- The following is the troubleshooting procedure for the wireless door lock control of a vehicle without the smart key system.
  For the troubleshooting procedure for the wireless door lock control of a vehicle with the smart key system, refer to the smart key system.
- inspect the fuse and relay before investigating the suspected areas shown in the table below.
- Inspect each malfunction circuit in numerical order for its corresponding symptom.

WIRELESS DOOR LOCK CONTROL SYSTEM:

Symptom	Suspected area	See page
The wireless door lock control system does not operate.	1. Transmitter battery	DL-232
	2. Enter the self-diagnostic mode. If the recognition code does not match the key code, check that the key code can be registered in the rewrite or add mode of the recognition code registration.	DL-82
	3. Wireless door lock receiver circuit	DL-89
	4. Power source circuit	DL-117
	5. IG signal circuit	DL-93
	6. Key unlock warning switch circuit	DL-120
	7. Front door courtesy light switch circuit	DL-101
	8. Rear door courtesy light switch circuit	DL-104
	9. Luggage compartment door courtesy light switch circuit	DL-107
	10. If the symptoms still occur after the above areas are inspected and proved to be normal, replace the instrument panel J/B (body ECU).	-
The panic alarm function only does not operate.	1. Transmitter battery	DL-232
	2. If the symptoms still occur after the above area is inspected and proved to be normal, replace the instrument panel J/B (body ECU).	-
The panic alarm function does not operate (Vehicle horn).	1. Power source circuit	DL-117
	2. IG signal circuit	DL-93
	3. Horn circuit	DL-95
	4. If the symptoms still occur after the above circuits are inspected and proved to be normal, replace the instrument panel J/B (body ECU).	-
The panic alarm function does not operate (Security horn).	1. Power source circuit	DL-117
	2. IG signal circuit	DL-93
	3. Theft deterrent system	TD-9
	4. If the symptoms still occur after the above areas are inspected and proved to be normal, replace the instrument panel J/B (body ECU).	-
The panic alarm function does not operate (Hazard warning light).	1. Power source circuit	DL-117
	2. IG signal circuit	DL-93
	3. Hazard warning light circuit	DL-98
	4. If the symptoms still occur after the above circuits are inspected and proved to be normal, replace the instrument panel J/B (body ECU).	-

Symptom	Suspected area	See page
The panic alarm function does not operate (Headlight or taillight).	1. Power source circuit	DL-117
	2. IG signal circuit	DL-93
	3. Lighting system	LI-18
	4. If the symptoms still occur after the above areas are inspected and proved to be normal, replace the instrument panel J/B (body ECU).	-
The automatic lock function does not operate.	1. Power source circuit	DL-117
	2. IG signal circuit	DL-93
	3. Key unlock warning switch circuit	DL-120
	4. Front door courtesy light switch circuit	DL-101
	5. Rear door courtesy light switch circuit	DL-104
	6. Luggage compartment door courtesy light switch circuit	DL-107
	7. If the symptoms still occur after the above circuits are inspected and proved to be normal, replace the instrument panel J/B (body ECU).	-
The door ajar warning function only does not operate.	1. Power source circuit	DL-117
	2. IG signal circuit	DL-93
	3. Key unlock warning switch circuit	DL-120
	4. Front door courtesy light switch circuit	DL-101
	5. Rear door courtesy light switch circuit	DL-104
	6. Luggage compartment door courtesy light switch circuit	DL-107
	7. If the symptoms still occur after the above circuits are inspected and proved to be normal, replace the instrument panel J/B (body ECU).	-
The illuminated entry function only does not operate.	1. Lighting system	LI-18
	2. If the symptoms still occur after the above area is inspected and proved to be normal, replace the instrument panel J/B (body ECU).	-
The answer back function does not operate (Wireless door lock buzzer).	1. Power source circuit	DL-117
	2. Wireless door lock buzzer circuit	DL-110
	3. If the symptoms still occur after the above circuits are inspected and proved to be normal, replace the instrument panel J/B (body ECU).	-
The answer back function does not operate (Hazard warning light).	1. Power source circuit	DL-117
	2. Hazard warning light circuit	DL-98
	3. If the symptoms still occur after the above circuits are inspected and proved to be normal, replace the instrument panel J/B (body ECU).	-
The wireless trunk opener function only does not operate.	1. Power source circuit	DL-117
	2. Key unlock warning switch circuit	DL-120
	3. Luggage compartment door courtesy light switch circuit	DL-107
	4. Luggage compartment door opener motor circuit	DL-114
	5. If the symptoms still occur after the above circuits are inspected and proved to be normal, replace the instrument panel J/B (body ECU).	-

TERMINALS OF ECU

1. INSTRUMENT PANEL JUNCTION BLOCK (MULTIPLEX NETWORK BODY ECU)

Instrument Panel Junction Block (Front Side) Connector Front View:

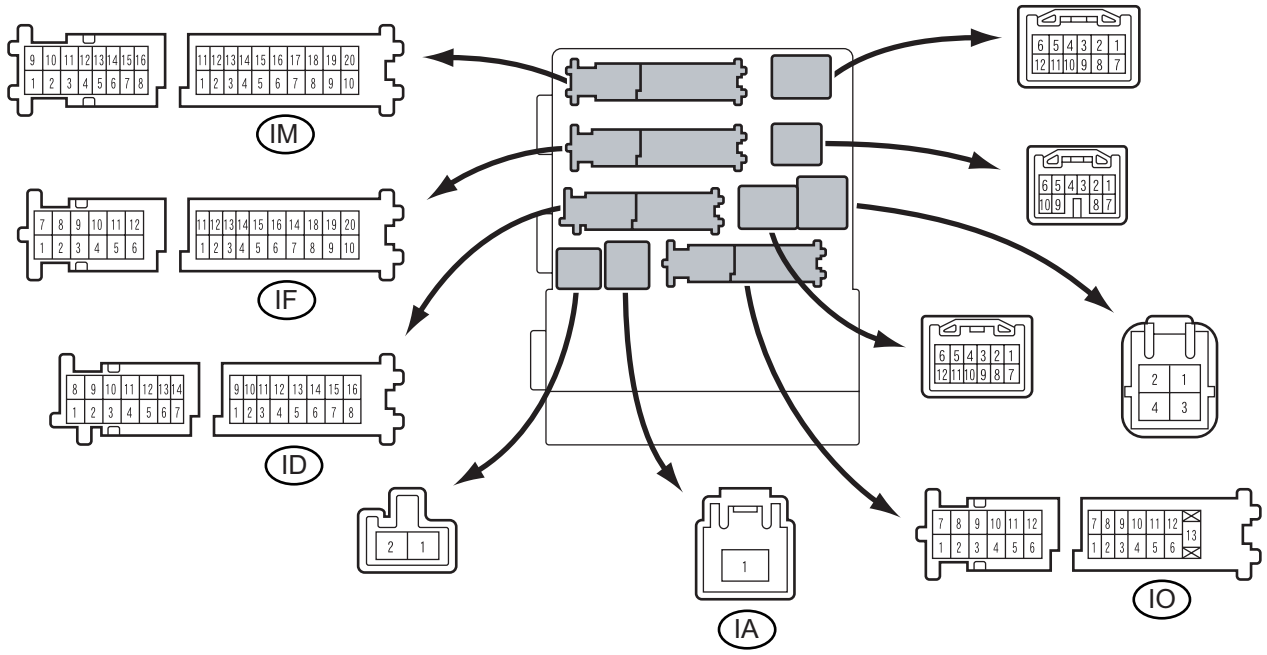

Instrument Panel Junction Block (Rear Side) Connector Front View:

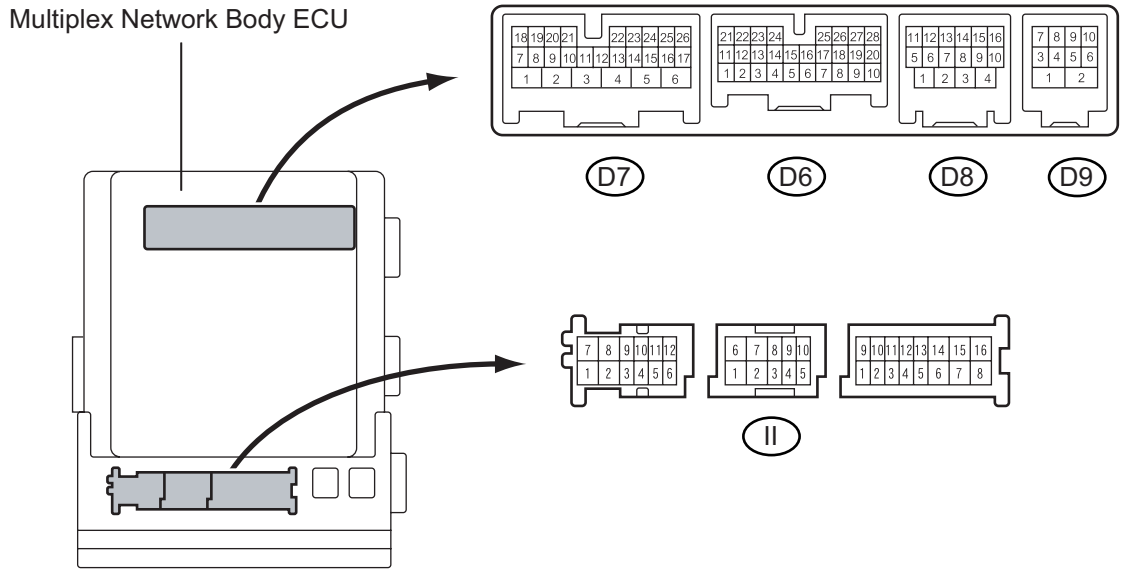

H

E125950E01

DL

(a) Disconnect the multiplex network body ECU connector and instrument panel J/B connector.
(b) Check the voltage and resistance of each terminal of the wire harness side connector.

Standard

Symbols (Terminal No.)	Wiring Color	Terminal Description	Condition	Specified Condition
BATB (IA-1) - Body ground	B - Body ground	+B (power battery system) power supply	Always	10 to 14 V
BECU (ID-10) - Body ground	O - Body ground	+B power supply	Always	10 to 14 V
ALTB (ID-16) - Body ground	W - Body ground	+B (power generator system) power supply	Always	10 to 14 V
GND1 (IF-10) - Body ground	W-B - Body ground	Ground	Always	Below 1 Ω
ACC (II-3) - Body ground	GR - Body ground	Ignition power supply (ACC signal)	Ignition switch off → on (ACC)	Below 1 V → 10 to 14 V
IG (II-9) - Body ground	G - Body ground	Ignition power supply (IG signal)	Ignition switch off → on (IG)	Below 1 V → 10 to 14 V
GND2 (IM-9) - Body ground	W-B - Body ground	Ground	Always	Below 1 Ω
LCTY (IO-7) - Body ground	B - Body ground	Rear door (LH) courtesy light switch signal	Rear door (LH) is open → closed	Below 1 Ω → 10 kΩ or higher
PCTY (D6-23) - Body ground	L - Body ground	Passenger side door courtesy light switch signal	Passenger side door is open → closed	Below 1 Ω → 10 kΩ or higher
LGCY (D6-25) - Body ground	V - Body ground	Luggage compartment light (Luggage compartment door courtesy light switch) signal	Luggage compartment light is ON → OFF (Luggage compartment door is open (unlocked) → closed (locked))	Below 1 Ω → 10 kΩ or higher
KSW (D7-21) - Body ground	B- Body ground	Unlock warning switch signal	Ignition key is inserted → not inserted	Below 1 Ω → 10 kΩ or higher
DCTY (D8-14) - Body ground	L - Body ground	Driver side door courtesy light switch signal	Driver side door is open → closed	Below 1 Ω → 10 kΩ or higher
RCTY (D8-16) - Body ground	GR - Body ground	Rear door (RH) courtesy light switch signal	Rear door (RH) is open → closed	Below 1 Ω → 10 kΩ or higher

If the result is not as specified, there may be a malfunction on the wire harness side.
(c) Reconnect the multiplex network body ECU connector and instrument panel J/B connector.
(d) Check the voltage of each terminal of the ECU side connector.

Voltage

Symbols (Terminal No.)	Wiring Color	Terminal Description	Condition	Specified Condition
TR+ (D7-1) - Body ground	B - Body ground	Luggage compartment door opener motor signal	Luggage compartment door is closed (locked) → open (unlocked)	Below 1 V → 10 to 14 V (*1)
HAZ (D7-2) - Body ground	P - Body ground	Turn signal flasher relay signal	Any transmitter switch is pressed → not pressed	Below 1 V → 10 to 14 V (*2)

If the result is not as specified, the multiplex network body ECU may have a malfunction.
(*1): When operating the motor.
(*2): When operating the answer back function.

DIAGNOSIS SYSTEM

1. DESCRIPTION

(a) The ECM stores trouble codes when trouble occurs on the vehicle.
The diagnosis system allows for reading of the trouble codes from the DLC3.
Use the intelligent tester or SST to check and solve the problem.

2. CHECK DLC3

(a) The vehicle's ECM uses ISO 9141-2 for communication. The terminal arrangement of the DLC3 complies with SAE J1962 and matches the ISO 9141-2 format.

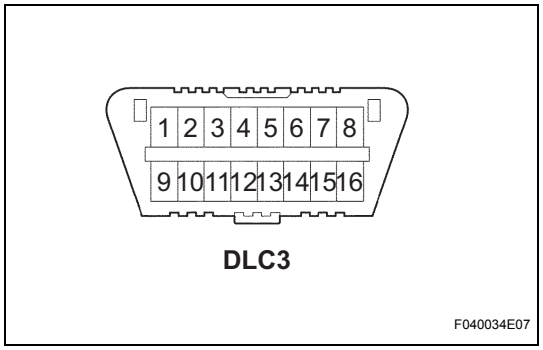

Symbols (Temrminal No.)	Terminal Description	Condition	Specified Condition
SIL (7) - SG (5)	Bus "+" line	During transmission	Pulse generation
CG (4) - Body ground	Chassis ground	Always	Below 1 Ω
SG (5) - Body ground	Signal ground	Always	Below 1 Ω
BAT (16) - Body ground	Battery positive	Always	11 to 14 V
CANH (6) - CANL (14)	HIGH-level CAN bus line	Ignition switch off	54 to 67 Ω
CANH (6) - Body positive	HIGH-level CAN bus line	Ignition switch off	1 MΩ or higher
CANH (6) - CG (4)	HIGH-level CAN bus line	Ignition switch off	3 kΩ or higher
CANL (14) - Battery positive	LOW-level CAN bus line	Ignition switch off	1 MΩ or higher
CANL (14) - CG (4)	LOW-level CAN bus line	Ignition switch off	3 kΩ or higher

HINT:
If the display shows a communication error message after connecting the intelligent tester to the DLC3 and turning the ignition switch on (IG), there is a problem with either the vehicle or the tool (intelligent tester only).

- If communication is normal when the tool is connected to another vehicle, inspect the DLC3 on the original vehicle.
- If communication is still impossible when the tool is connected to another vehicle, the problem is probably in the tool itself, so consult the Service Department listed in the tool's instruction manual.

DL

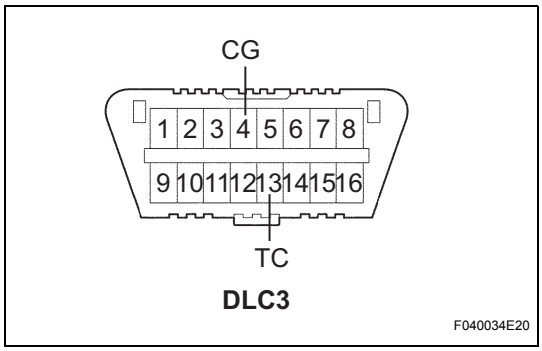

DTC CHECK / CLEAR

1. DTC CHECK / CLEAR USING SST CHECK WIRE:

(a) Step 1: DTC check

(1) Using SST, create a short-circuit between terminals TC and CG of the DLC3.
SST 09843-18040

(2) Turn the ignition switch on (IG).

(3) Read and record DTCs from the door warning light on the combination meter. As examples, refer to the chart below for the blinking patterns of the normal system code and diagnostic trouble code 42.

Normal System Code:

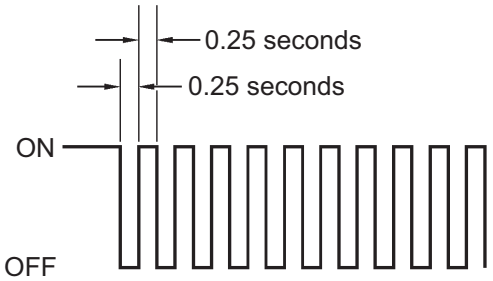

Diagnostic Trouble Code:

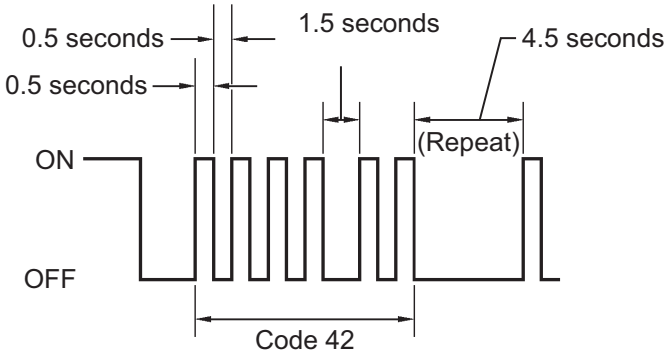

N

I045794E01

HINT:

- If the door warning light does not conform to DTC blinking patterns, or to the normal system code blinking pattern, inspect the multiplex communication system (See page MP-23).
- The door warning light circuit uses BEAN for communication. If there are any malfunctions in the circuit, check for DTCs in the multiplex communication system.

(b) DTC clear

(1) Turn the ignition switch off.

(2) If DTCs are indicated, repair the relevant circuits referring to the DIAGNOSTIC TROUBLE CODE CHART (See page DL-86).

(3) Clear the DTCs according to either one of the following procedures.

- Disconnect the negative (-) battery cable for 60 seconds.
- Remove the ECU-B fuse for 60 seconds.

(4) Recheck the DTCs (see step 1).

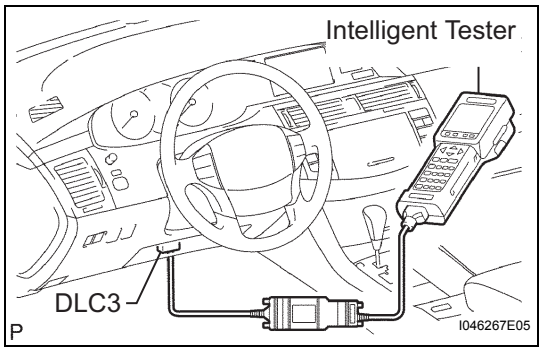

2. DTC CHECK / CLEAR USING INTELLIGENT TESTER:

(a) DTC check
  (1) Connect the intelligent tester to the DLC3.
  (2) Turn the ignition switch on (IG).
  (3) Read the DTCs on the tester screen.

(b) DTC clear
  (1) Connect the intelligent tester to the DLC3.
  (2) Turn the ignition switch on (IG).
  (3) Clear the DTCs following the prompts on the tester screen.
  HINT:
  The intelligent tester has a SNAPSHOT function which records the monitored data.
  Refer to the intelligent tester operator's manual for further details.

3. SELF-DIAGNOSTIC MODE OPERATING IGNITION KEY CYLINDER:

(a) Switch to self-diagnostic mode.
  (1) Establish the vehicle's initial conditions (See page DL-71).
  (2) Insert the key into the ignition key cylinder and remove it.
  (3) Within 5 seconds after the key is removed, reinsert it into the ignition key cylinder.
  (4) Step A: Turn the ignition switch on (IG) then off.
  (5) Step B: Within 30 seconds of turning the ignition switch off, repeat step (A) 9 more times.
  HINT:
  - Turning the ignition switch on (IG), after step (B) has been completed, will end the self-diagnostic mode.
  - Do not lock or unlock doors while performing the self-diagnostic mode.

  NOTICE:
  If the change to self-diagnostic mode fails, the system will return to normal mode.

(b) Check that the system has switched to self-diagnostic mode by checking the sound pattern of the wireless door lock buzzer.

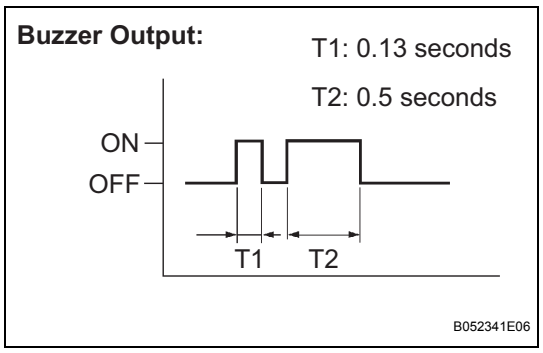

(c) Check the diagnostic outputs when the door control transmitter switch is held down. The diagnostic outputs can be checked by listening to the wireless door lock buzzer.

Buzzer Output:

Normal Wave (Lock Switch):

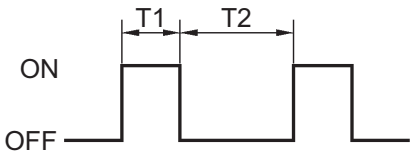

Normal Wave (Unlock Switch):

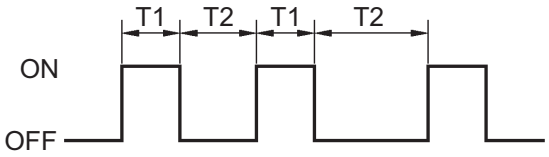

Normal Wave (Panic or Trunk Opener Switch):

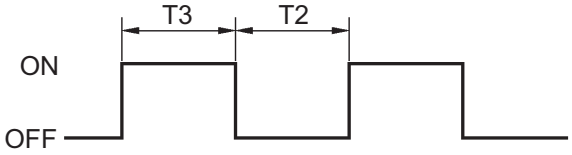

Mismatched Recognition Code:

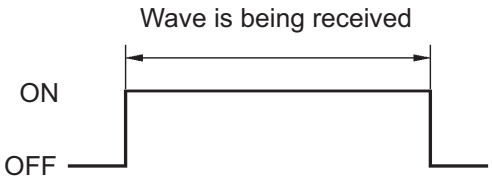

No Diagnostic Output:



T1: 0.125 seconds

T2: 0.25 seconds

T3: 0.5 seconds

N

I046255E01

4. SELF-DIAGNOSTIC MODE USING INTELLIGENT TESTER:

(a) Switch to self-diagnostic mode.

(1) Connect the intelligent tester to the DLC3.

(2) Turn the ignition switch on (IG) and turn the intelligent tester main switch on.

HINT:

Refer to the intelligent tester operator's manual for further details.

DATA LIST / ACTIVE TEST

1. DATA LIST

(a) While the intelligent tester is connected to the DLC3 with the ignition switch on (IG), the wireless door lock control data list can be displayed. Follow the prompts on the tester screen to access the DATA LIST.

BODY:

Item	Measurement Item/Display (Range)	Normal Condition	Diagnostic Note
KEY UNLK WRN SW	Unlock warning switch/ON or OFF	ON: Ignition key is inserted OFF: Ignition key is not inserted	-
WIRELESS OPER	Wireless door lock control function/ON or OFF	ON: Operating OFF: Not operating	-
OPEN DOOR WARN	Open door warning/ON or OFF	ON: Operating OFF: Not operating	-
AUTO LOCK DELAY	Automatic lock time/60 s or 30 s	60 s: 60 seconds 30 s: 30 seconds	-
UNLOCK/2 OPER	2 times operation wireless unlock/ON or OFF	ON: All doors unlock when wireless unlock switch is pressed twice OFF: All doors unlock when wireless unlock switch is pressed once	-
ALARM FUNCTION	Panic function/ON or OFF	ON: Operating OFF: Not operating	-
LUGG COURTESY SW	Luggage compartment door courtesy light switch/ON or OFF	ON: Door is open OFF: Door is closed	-
IG SW	Ignition switch on (IG)/ON or OFF	ON: Ignition switch on (IG) OFF: Ignition switch off or on (ACC)	-
ACC SW	Ignition switch on (ACC)/ON or OFF	ON: Ignition switch on (ACC) OFF: Ignition switch not on (ACC)	-
HAZARD ANS BACK	Hazard answer back of wireless/ON or OFF	ON: Operating OFF: Not operating	-
WIRLS BUZZ RESP	Wireless door lock buzzer response/ON or OFF	ON: Operating OFF: Not operating	-
D DOR CTY SW	Driver side door courtesy light switch/ON or OFF	ON: Door is open OFF: Door is closed	-
P DOR CTY SW	Passenger side door courtesy light switch/ON or OFF	ON: Door is open OFF: Door is closed	-
Rr DOR CTY SW	Rear door courtesy light switch/ON or OFF	ON: Either LH or RH door is open OFF: Both LH and RH doors are closed	-
D LOCK POS SW	Driver side door lock position switch/ON or OFF	ON: Door lock is in unlock position OFF: Door lock is in lock position	-
P LOCK POS SW	Passenger side door lock position switch/ON or OFF	ON: Door lock is in unlock position OFF: Door lock is in lock position	-
Rr LOCK POS SW	Rear door lock position switch/ON or OFF	ON: Door lock is in unlock position OFF: Door lock is in lock position	-

Item	Measurement Item/Display (Range)	Normal Condition	Diagnostic Note
TRUNK LID OPER	Trunk lid operation/1 TIME or 2 TIMES or 0.8 s PR or OFF	1 TIME: Trunk opens when wireless trunk opener switch is pressed once 2 TIMES: Trunk opens when wireless trunk opener switch is pressed twice 0.8 s PR: Trunk opens when trunk opener switch is pressed and held down for 0.8 seconds OFF: Not operating	-

2. ACTIVE TEST

HINT:

Performing the ACTIVE TEST using the intelligent tester allows components such as the relay, VSV and actuator to operate without part removal. Performing the ACTIVE TEST as the first step of troubleshooting is one way to shorten labor time.

It is possible to display the DATA LIST during the ACTIVE TEST.

(a) Connect the intelligent tester to the DLC3.

(b) Turn the ignition switch on (IG).

(c) According to the display on the tester, perform the ACTIVE TEST.

HINT:

The ignition switch must be turned on (IG) to proceed to the ACTIVE TEST using the intelligent tester.

BODY:

Item	Vehicle Condition/Test Details	Diagnostic Note
HAZARD	Turns turn signal flasher (relay) assembly ON/OFF	Observe headlight and rear combination light
TRUNK/BDOR OPEN	Turns luggage compartment door opener motor ON/OFF	Observe luggage compartment door

DIAGNOSTIC TROUBLE CODE CHART

HINT:
If a trouble code is displayed during the DTC check, inspect the trouble areas listed for that code. For details of the code, refer to "See page " in the DTC chart.

- The following is the troubleshooting procedure for the wireless door lock control of a vehicle without the smart key system.
  For the troubleshooting procedure for the wireless door lock control of a vehicle with the smart key system, refer to the smart key system.
- Inspect the fuse and relay before investigating the trouble areas shown in the table below.

WIRELESS DOOR LOCK CONTROL SYSTEM

DTC No.	Detection Item	Trouble Area	See page
B1242	Wireless Door Lock Tuner Circuit Malfunction	1. Wire harness 2. Door control receiver 3. Instrument panel J/B (Multiplex network body ECU)	DL-89

ON-VEHICLE INSPECTION

1. CHECK WIRELESS DOOR LOCK CONTROL SYSTEM

HINT:

- The following switches built into the door control transmitter send radio waves to the door lock control.
- The operational range must be taken into account during checks.

(a) Establish conditions that allow the wireless control function to be operated successfully.

(b) Check these basic functions.

(1) Check that all the doors lock when the lock switch is pressed.

(2) Check that all the doors unlock when the unlock switch is pressed.

(c) Check the panic alarm function.

(1) Check that if the panic switch is held down for 0.8 seconds or more, the theft deterrent alarm function sounds the horn, and flashes the headlights, tail lights and hazard warning lights for 27.5 seconds. And with the theft alarm function active, check if pressing any switch on the transmitter stops the horn and turns off the headlights, tail lights and hazard warning lights.

(d) Check the automatic lock function.

(1) Check that if all the doors are unlocked with the unlock switch and none of the doors are opened or locked within approximately 30 seconds, the doors automatically re-lock.

(2) Check that if all the doors are unlocked with the unlock switch and a door is opened or locked within approximately 30 seconds, the automatic lock function does not operate.

(e) Check the door ajar warning function.

(1) Check that if a door is open or not completely closed, the doors cannot be locked with the lock switch and the wireless door lock buzzer sounds for about 10 seconds.

(f) Check the room light ON function.

HINT:

Move the room light switch to the DOOR position before the check.

(1) Check that the room light comes on simultaneously with the unlocking operation when the unlock switch has been pressed for 1 second.

(2) Check that the room light goes off in approximately 15 seconds if none of the doors is opened after the unlocking operation.

(g) Check the repeat function.

(1) Check that all doors attempt to automatically lock once again 1 second after the lock switch has been pressed while one of the door lock knobs is held in the unlocked position.

(h) Check the answer back function.
  (1) When the lock switch is pressed, check that the hazard warning lights flash once and the wireless door lock buzzer sounds once simultaneously with the locking of all the doors.
  (2) When the unlock switch is pressed, check that the hazard warning lights flash twice and the wireless door lock buzzer sounds twice simultaneously with the unlocking of all the doors.

(i) Check the switch operation fail-safe function.
  (1) Check that the doors cannot be locked by operating a switch while the key is in the ignition key cylinder.
  HINT:
  This check cannot be made when the system is in recognition code registration mode.

(j) Check the chattering prevention function.
  (1) Check that the corresponding operation occurs only once, and does not repeat itself while the switch is kept pressed. Check that the corresponding operation is carried out when the switch is operated repeatedly at 1-second intervals.

(k) Check the trunk opener function.
  (1) Check that the trunk opens when the trunk opener switch is held down for 0.8 seconds or more.

Door Control Receiver Wire Harness View:

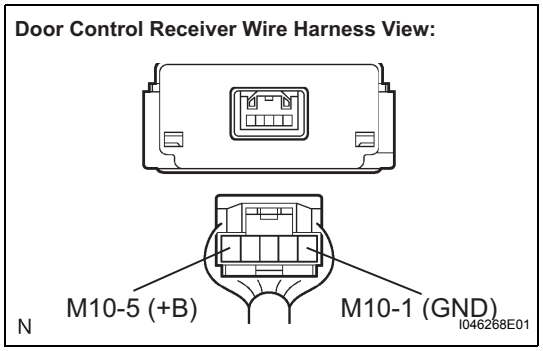

2. CHECK DOOR CONTROL RECEIVER

(a) Disconnect the door control receiver connector.

(b) Measure the voltage according to the value(s) in the table below.

Voltage

Tester Connection	Condition	Specified Condition
M10-5 (+B) - Body ground	Always	10 to 14 V

(c) Measure the resistance according to the value(s) in the table below.

Resistance

Tester Connection	Condition	Specified Condition
M10-1 (GND) - Body ground	Always	Below 1 Ω

If the result is not as specified, there may be a malfunction on the wire harness side.

DTC	B1242	Wireless Door Lock Tuner Circuit Malfunction

DESCRIPTION

The door control receiver receivers signals from the transmitter and sends these signals to the multiplex network body ECU.

DTC No.	DTC Detection Condition	Trouble Area
B1242/42	In diagnostic mode, an applicable RDA signal cannot be received within 1 second after an PRG signal has been output from the body ECU.	• Wire harness • Door control receiver • Instrument panel J/B (Multiplex network body ECU)

WIRING DIAGRAM

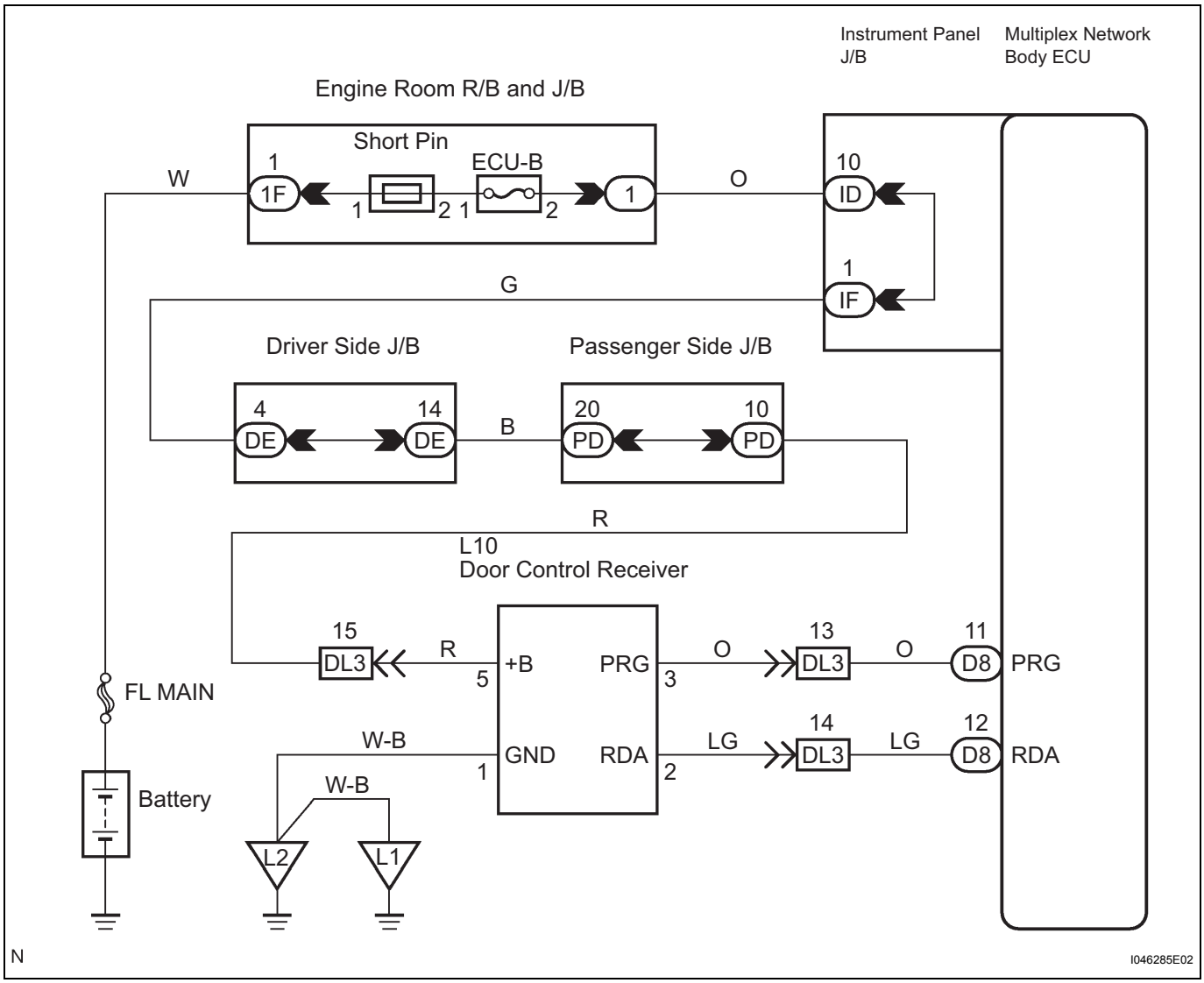

INSPECTION PROCEDURE

1	CHECK HARNESS AND CONNECTOR (BETWEEN MULTIPLEX NETWORK BODY ECU - DOOR CONTROL RECEIVER)

Multiplex Network Body ECU Wire Harness View:

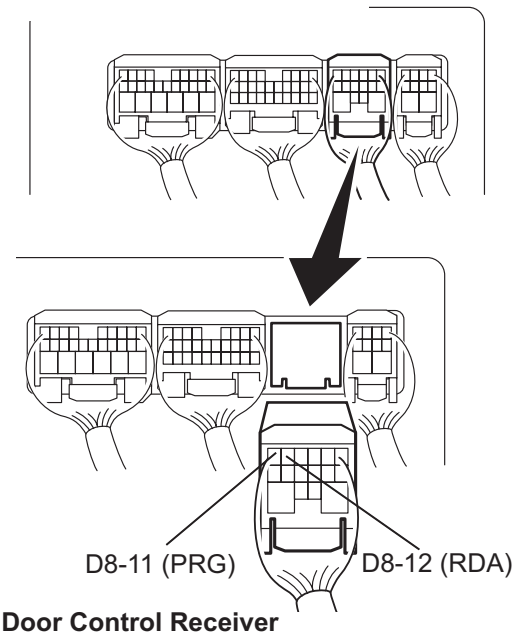

Door Control Receiver Wire Harness View:

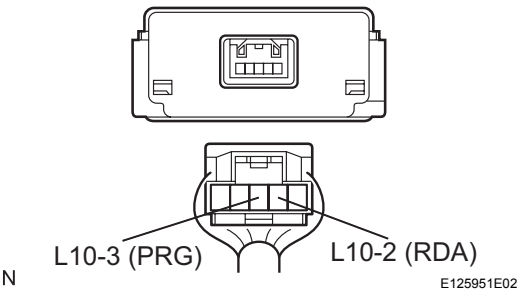

(a) Disconnect the multiplex network body ECU (D8) connector and the door control receiver connector.
(b) Measure the resistance according to the value(s) in the table below.

Resistance

Tester Connection	Condition	Specified Condition
D8-11 (PRG) - L10-3 (PRG)	Always	Below 1 Ω
D8-11 (PRG) - Body ground	Always	10 kΩ or higher
D8-12 (RDA) - L10-2 (RDA)	Always	Below 1 Ω
D8-12 (RDA) - Body ground	Always	10 kΩ or higher

DL

NG → **REPAIR OR REPLACE HARNESS OR CONNECTOR**

OK

2	INSPECT DOOR CONTROL RECEIVER (+B TERMINAL)

Door Control Receiver Wire Harness View:

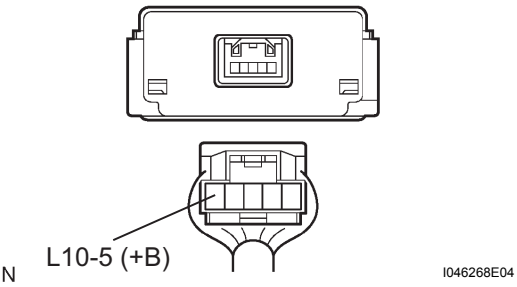

(a) Measure the voltage according to the value(s) in the table below.

Voltage

Tester Connection	Condition	Specified Condition
L10-5 (+B) - Body ground	Always	10 to 14 V

NG → **REPAIR OR REPLACE HARNESS OR CONNECTOR (+B CIRCUIT)**

OK

3	INSPECT DOOR CONTROL RECEIVER (GND TERMINAL)

Door Control Receiver Wire Harness View:

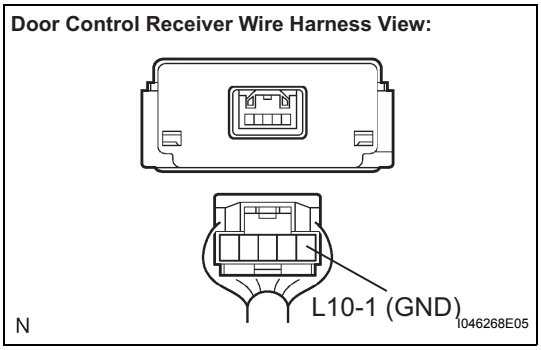

(a) Measure the resistance according to the value(s) in the table below.

Resistance

Tester Connection	Condition	Specified Condition
L10-1 (GND) - Body ground	Always	Below 1 Ω

NG → REPAIR OR REPLACE HARNESS OR CONNECTOR (GND CIRCUIT)

DL

OK

4	REPLACE DOOR CONTROL RECEIVER

(a) Reconnect the multiplex network body ECU (D8) connector.
(b) Replace the door control receiver.
(c) Perform the registration procedures (See page DL-71).
HINT:
If a new or normally functioning door control receiver is available, connect it and check if the wireless door lock function is normal or DTCs are output. If the alternative receiver functions normally, replace the original door control receiver.

NEXT

5	RECONFIRM DTC OUTPUT

(a) Clear the DTC (See page DL-82).
(b) Check if the same DTC is detected.
HINT:
Reinstall the sensors, connectors, etc. and restore the previous vehicle conditions before rechecking for DTCs.

Result

Result	Proceed to
DTC is output	A
DTC is not output (When troubleshooting in accordance with the DTC CHART)	B
DTC is output (When troubleshooting in accordance with the PROBLEM SYMPTOMS TABLE)	C

B → END

C → PROCEED TO NEXT CIRCUIT INSPECTION SHOWN IN PROBLEM SYMPTOMS TABLE

A

REPLACE INSTRUMENT PANEL JUNCTION BLOCK ASSEMBLY

IG Signal Circuit

DESCRIPTION

The multiplex network body ECU determines the ignition position (off, on (ACC, IG)) based on signals from the IG or ACC circuit.
Signals from the unlock warning switch are used to operate wireless door lock control system functions such as automatic lock and door ajar warning.

WIRING DIAGRAM

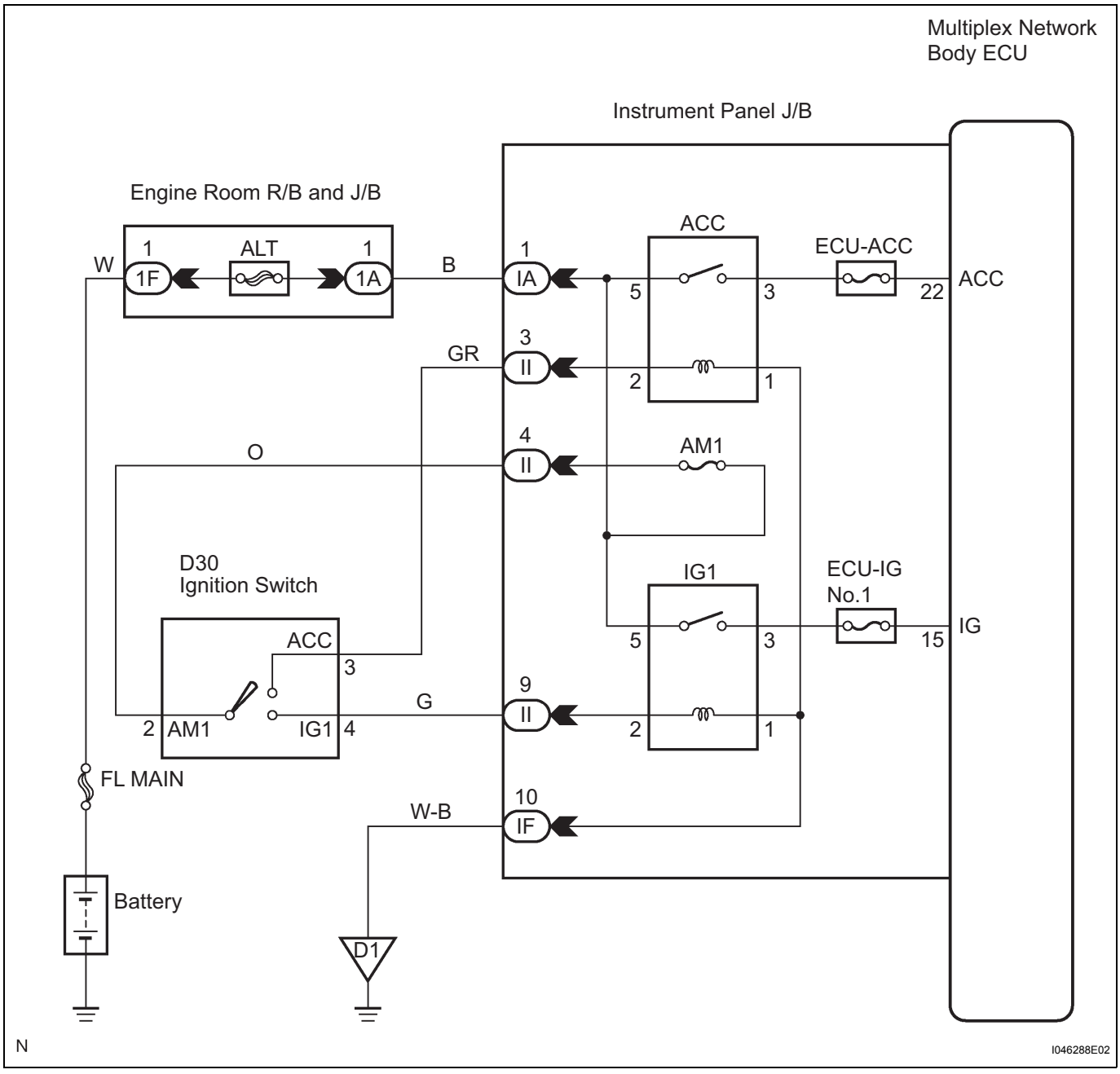

INSPECTION PROCEDURE

HINT:
Start the inspection from step 1 when using the intelligent tester and start from step 2 when not using the intelligent tester.

1	READ VALUE ON INTELLIGENT TESTER (IGNITION SWITCH)

(a) Connect the intelligent tester to the DLC3.
(b) Turn the ignition switch on (IG) and turn the intelligent tester main switch on.
(c) Select the items below in the "DATA LIST" and read the display on the intelligent tester.

BODY:

Item	Measurement Item/Display (Range)	Normal Condition	Diagnostic Note
IG SW	Ignition switch on (IG)/ON or OFF	ON: Ignition switch on (IG) OFF: Ignition switch off or on (ACC)	-
ACC SW	Ignition switch on (ACC)/ON or OFF	ON: Ignition switch on (ACC) OFF: Ignition switch not on (ACC)	-

OK:
When the ignition switch is operated, the display changes as shown above.

NG → **Go to step 2**

OK

PROCEED TO NEXT CIRCUIT INSPECTION SHOWN IN PROBLEM SYMPTOMS TABLE

2	INSPECT MULTIPLEX NETWORK BODY ECU (IG - ACC TERMINALS)

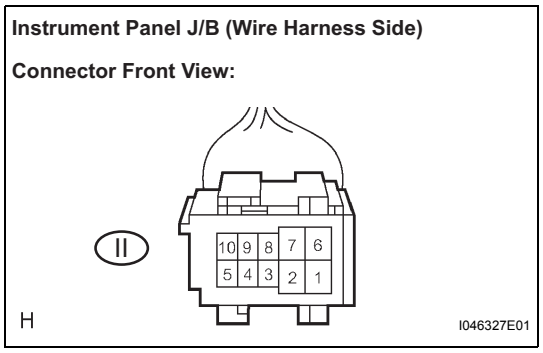

(a) Turn the ignition switch off.
(b) Disconnect the instrument panel J/B (II) connector.
(c) Measure the voltage according to the value(s) in the table below.

Voltage

Tester Connection	Condition	Specified Condition
II-9 (IG) - Body ground	Ignition switch off	Below 1 V
II-9 (IG) - Body ground	Ignition switch on (IG)	10 to 14 V
II-3 (ACC) - Body ground	Ignition switch off	Below 1 V
II-3 (ACC) - Body ground	Ignition switch on (ACC)	10 to 14 V

NG → **REPAIR OR REPLACE HARNESS OR CONNECTOR (IG OR ACC CIRCUIT)**

OK

PROCEED TO NEXT CIRCUIT INSPECTION SHOWN IN PROBLEM SYMPTOMS TABLE

Horn Circuit

DESCRIPTION

The multiplex network body ECU activates the horn when a panic signal is detected from the door control transmitter.
HINT:
The horn for the panic alarm function can be set to OFF.

WIRING DIAGRAM

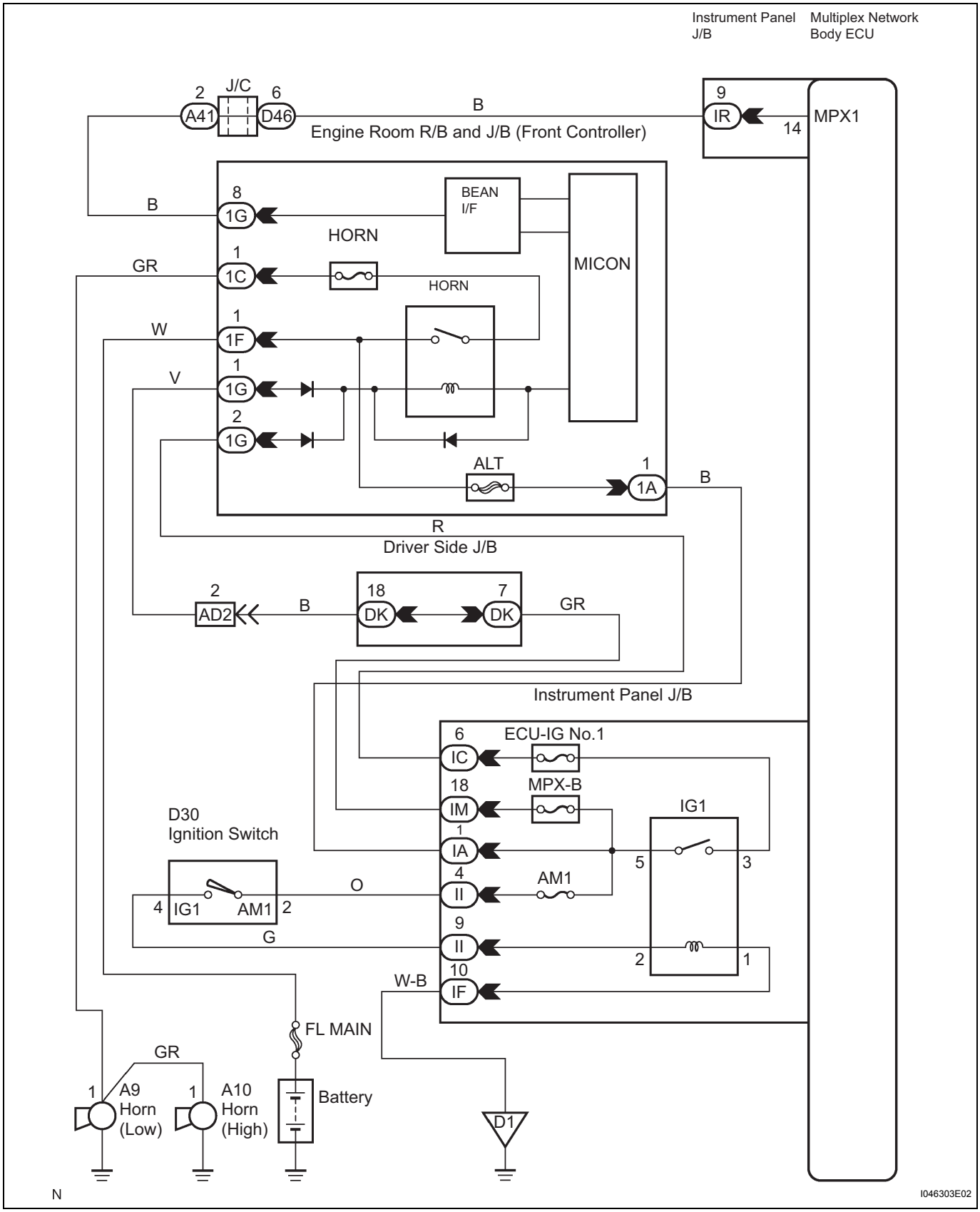

DL

INSPECTION PROCEDURE

HINT:
The horn circuit uses BEAN for communication. If there are any malfunctions in this circuit, check for DTCs in the multiplex communication system (See page MP-23).

1	CHECK STEERING PAD

(a) When pushing the steering pad switch, check that the vehicle horn sounds normally.
OK:
The horn sounds normally.

NG → **GO TO HORN SYSTEM**

OK

PROCEED TO NEXT CIRCUIT INSPECTION SHOWN IN PROBLEM SYMPTOMS TABLE

Hazard Warning Light Circuit

DESCRIPTION

The multiplex network body ECU blinks the hazard warning light when a lock/unlock signal is detected from the door control transmitter.

WIRING DIAGRAM

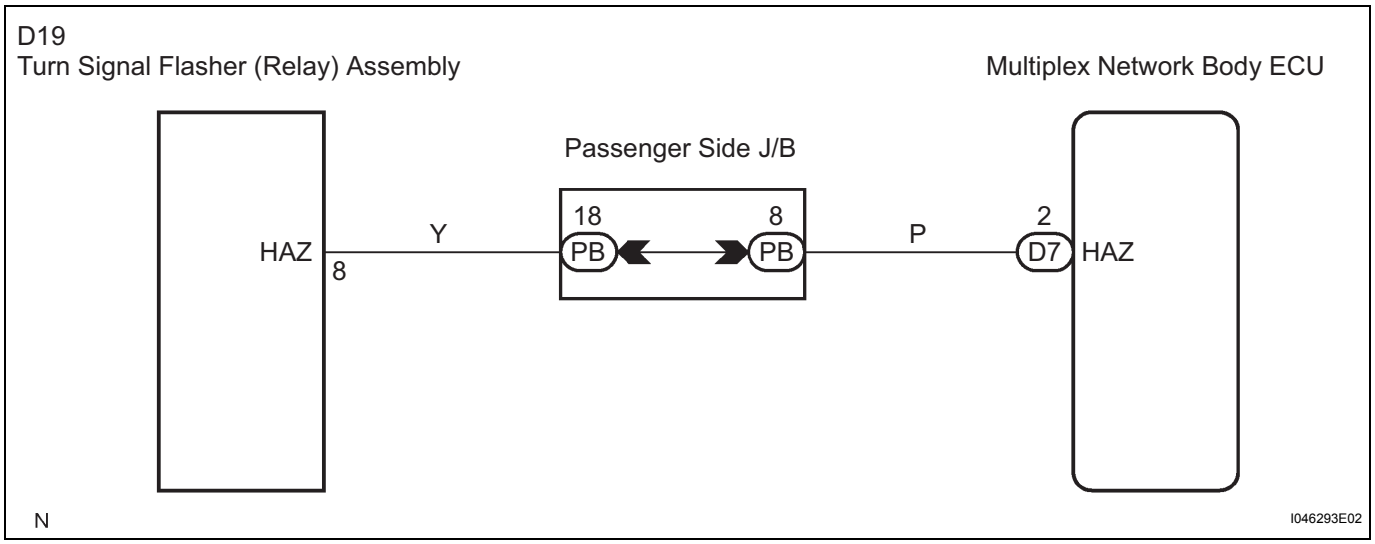

INSPECTION PROCEDURE

HINT:

- It is possible to set the hazard warning light to OFF so that it does not blink for the answer back operation function.
  Confirm that the hazard warning light is not set to OFF and the hazard warning light is operating normally before performing the following inspections.
- Start the inspection from step 1 when using the intelligent tester and start from step 2 when not using the intelligent tester.

1	PERFORM ACTIVE TEST BY INTELLIGENT TESTER (HAZARD WARNING LIGHT)

(a) Connect the intelligent tester to the DLC3.
(b) Turn the ignition switch on (IG) and turn the intelligent tester main switch on.
(c) Select "ACTIVE TEST" mode on the intelligent tester.

BODY:

Item	Vehicle Condition/Test Details	Diagnostic Note
HAZARD	Turns turn signal flasher (relay) assembly ON/OFF	Observe headlight and rear combination light

(d) Check that the intelligent tester can operate the hazard warning lights in the headlight and rear combination light units.
OK:
The hazard warning lights turn on and off in accordance with intelligent tester operation.

NG	Go to step 2

OK

PROCEED TO NEXT CIRCUIT INSPECTION SHOWN IN PROBLEM SYMPTOMS TABLE

2	INSPECT MULTIPLEX NETWORK BODY ECU (HAZ TERMINAL)

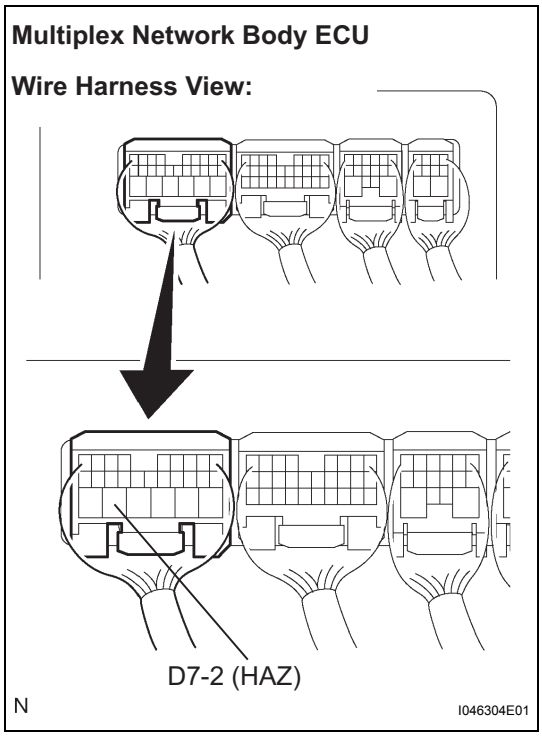

(a) Measure the voltage according to the value(s) in the table below.

Voltage

Tester Connection	Condition	Specified Condition
D7-2 (HAZ) - Body ground	Any transmitter switch pressed	Below 1 V
D7-2 (HAZ) - Body ground	Transmitter switch not pressed	10 to 14 V (*1)

(*1): When operating the answer back function.

NG → **Go to step 3**

OK

PROCEED TO NEXT CIRCUIT INSPECTION SHOWN IN PROBLEM SYMPTOMS TABLE

3	CHECK HARNESS AND CONNECTOR (BETWEEN MULTIPLEX NETWORK BODY ECU - TURN SIGNAL FLASHER)

Multiplex Network Body ECU Wire Harness View:

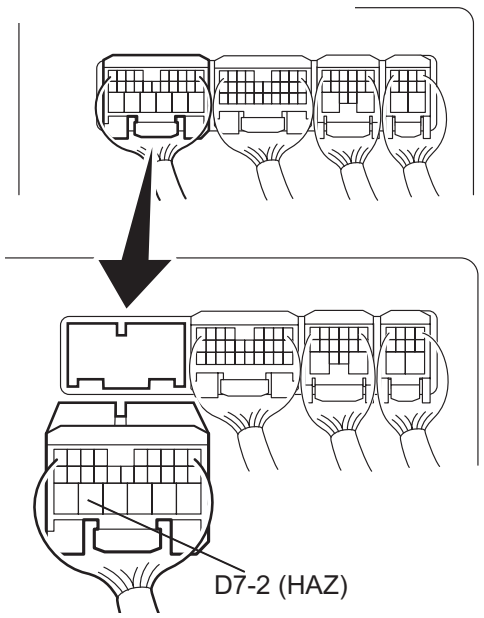

Turn Signal Flasher Assy (Wire Harness Side) Connector Front View:

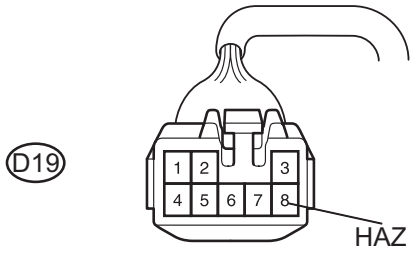

N

E125952E01

(a) Turn the ignition switch off.
(b) Disconnect the multiplex network body ECU (D7) connector and turn signal flasher assembly connector.
(c) Measure the resistance according to the value(s) in the table below.

Resistance

Tester Connection	Condition	Specified Condition
D7-2 (HAZ) - D19-8 (HAZ)	Always	Below 1 Ω
D7-2 (HAZ) - Body ground	Always	10 kΩ or higher

NG → **REPAIR OR REPLACE HARNESS OR CONNECTOR**

OK

REPLACE TURN SIGNAL FLASHER ASSEMBLY

DL

Front Door Courtesy Switch Circuit

DESCRIPTION

The multiplex network body ECU detects the door open or closed status based on signals from the front door courtesy light switches, and operates the automatic lock and door ajar warning functions.

WIRING DIAGRAM

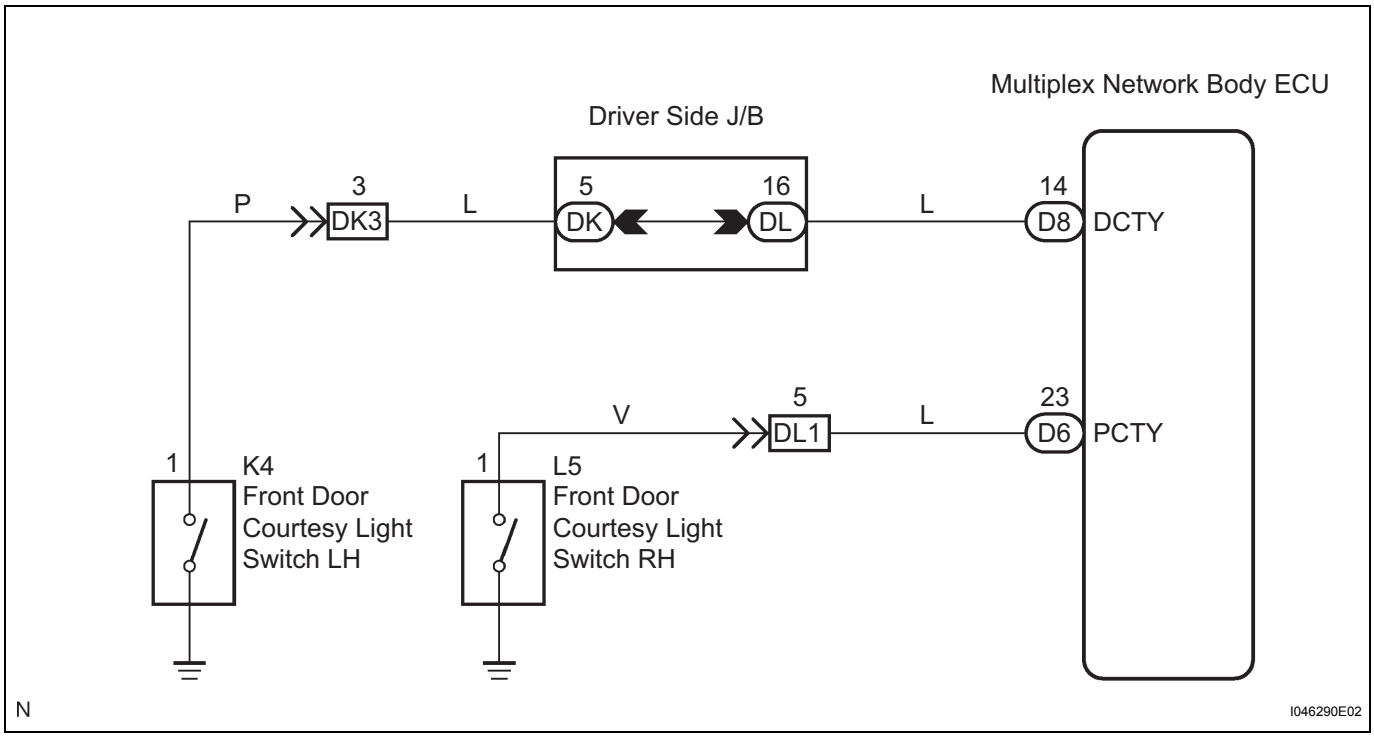

INSPECTION PROCEDURE

HINT:

Start the inspection from step 1 when using the intelligent tester and start from step 2 when not using the intelligent tester.

1	READ VALUE ON INTELLIGENT TESTER (FRONT DOOR COURTESY LIGHT SWITCH)

(a) Connect the intelligent tester to the DLC3.
(b) Turn the ignition switch on (IG) and turn the intelligent tester main switch on.
(c) Select the items below in the "DATA LIST" and read the display on the intelligent tester.

BODY:

Item	Measurement Item/Display (Range)	Normal Condition	Diagnostic Note
D DOR CTY SW	Driver side door courtesy light switch/ON or OFF	ON: Door is open OFF: Door is closed	-
P DOR CTY SW	Passenger side door courtesy light switch/ON or OFF	ON: Door is open OFF: Door is closed	-

OK:

When each front door is opened/closed, the display will change as shown above.

NG → **Go to step 2**

OK

PROCEED TO NEXT CIRCUIT INSPECTION SHOWN IN PROBLEM SYMPTOMS TABLE

2 INSPECT MULTIPLEX NETWORK BODY ECU (D, PCTY TERMINALS)

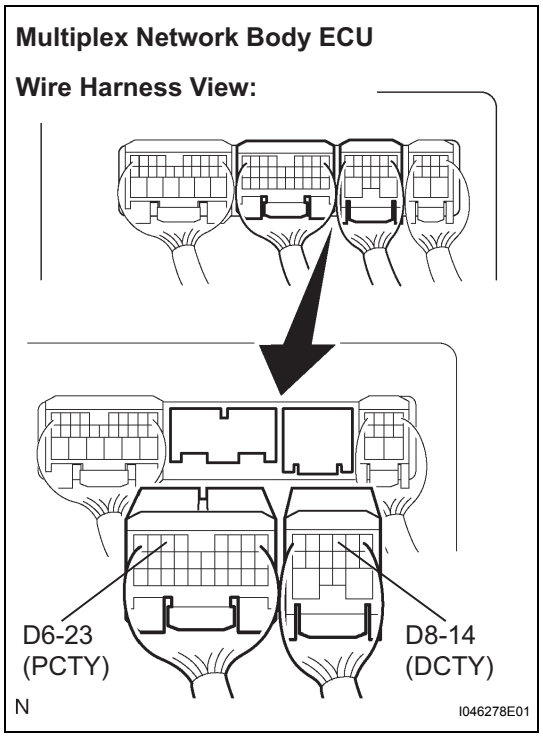

(a) Turn the ignition switch off.
(b) Disconnect the multiplex network body ECU (D6, D8) connectors.
(c) Measure the resistance according to the value(s) in the table below.

Resistance

Tester Connection	Condition	Specified Condition
D8-14 (DCTY) - Body ground	Driver side door is open	Below 1 Ω
D8-14 (DCTY) - Body ground	Driver side door is closed	10 kΩ or higher
D6-23 (PCTY) - Body ground	Passenger side door is open	Below 1 Ω
D6-23 (PCTY) - Body ground	Passenger side door is closed	10 kΩ or higher

NG → **Go to step 3**

OK

PROCEED TO NEXT CIRCUIT INSPECTION SHOWN IN PROBLEM SYMPTOMS TABLE

3 INSPECT FRONT DOOR COURTESY LIGHT SWITCH ASSEMBLY

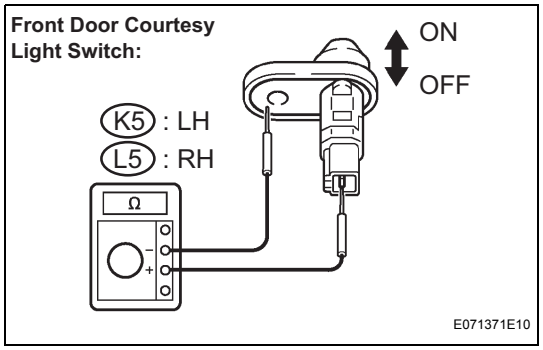

(a) Remove the front door courtesy light switch.
(b) Measure the resistance according to the value(s) in the table below.

Resistance

Tester Connection	Condition	Specified Condition
1 - Body ground	Switch ON (Shaft is not pressed)	Below 1 Ω
1 - Body ground	Switch OFF (Shaft is pressed)	10 kΩ or higher

NG → **REPLACE FRONT DOOR COURTESY LIGHT SWITCH ASSEMBLY**

OK

REPAIR OR REPLACE HARNESS OR CONNECTOR (BETWEEN MULTIPLEX NETWORK BODY ECU, BODY GROUND - FRONT DOOR)

Rear Door Courtesy Switch Circuit

DESCRIPTION

The multiplex network body ECU detects the door open or closed status based on signals from the rear door courtesy light switches, and operates the automatic lock and door ajar warning functions.

WIRING DIAGRAM

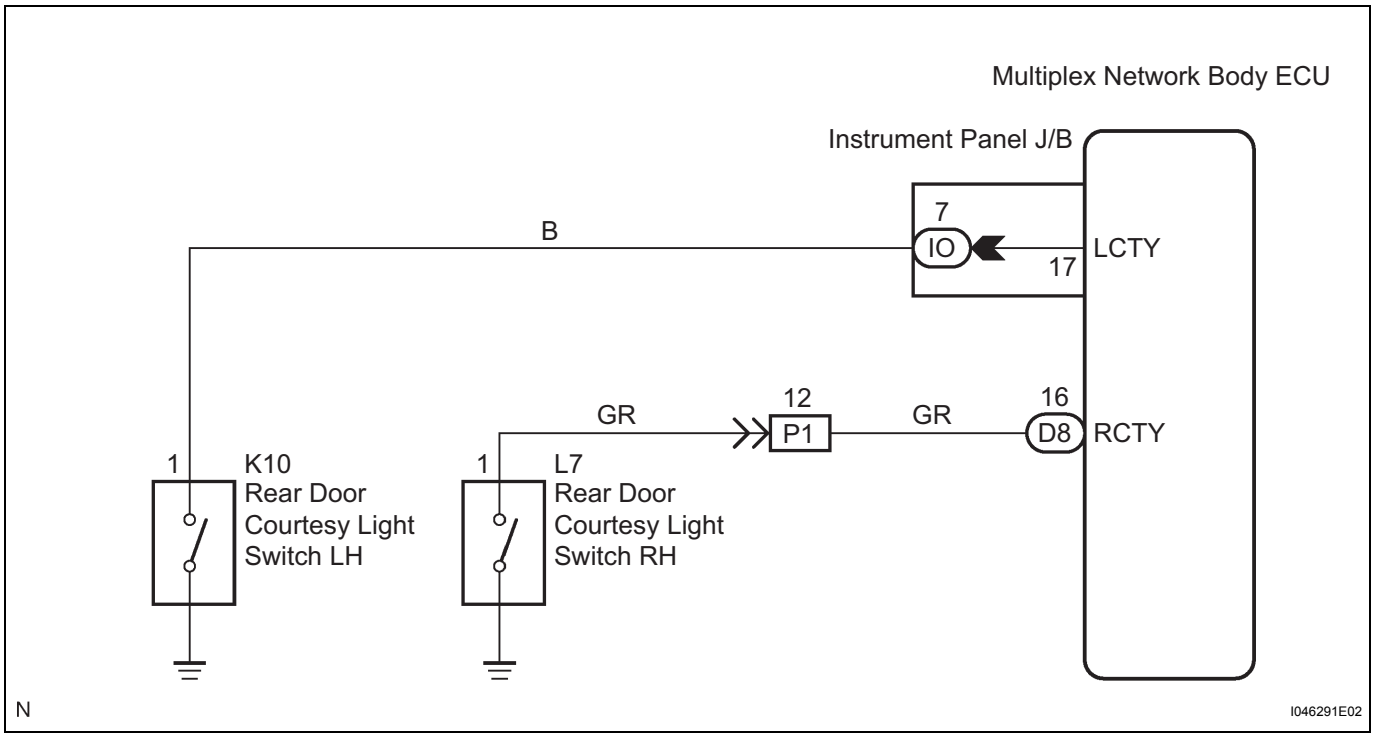

INSPECTION PROCEDURE

HINT:

Start the inspection from step 1 when using the intelligent tester and start from step 2 when not using the intelligent tester.

1	READ VALUE ON INTELLIGENT TESTER (REAR DOOR COURTESY LIGHT SWITCH)

(a) Connect the intelligent tester to the DLC3.
(b) Turn the ignition switch on (IG) and turn the intelligent tester main switch on.
(c) Select the items below in the "DATA LIST" and read the display on the intelligent tester.

BODY:

Item	Measurement Item/Display (Range)	Normal Condition	Diagnostic Note
Rr DOR CTY SW	Rear door courtesy light switch/ ON or OFF	ON: Either LH or RH door is open OFF: Both LH and RH doors are closed	-

OK:

When the rear doors are opened/closed, the display will change as shown above.

NG → **Go to step 2**

OK

PROCEED TO NEXT CIRCUIT INSPECTION SHOWN IN PROBLEM SYMPTOMS TABLE

2 INSPECT MULTIPLEX NETWORK BODY ECU (L, RCTY TERMINALS)

Instrument Panel J/B (Wire Harness Side) Connector Front View:

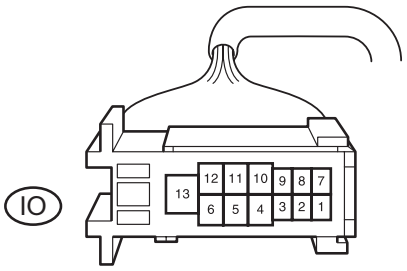

Multiplex Network Body ECU Wire Harness View:

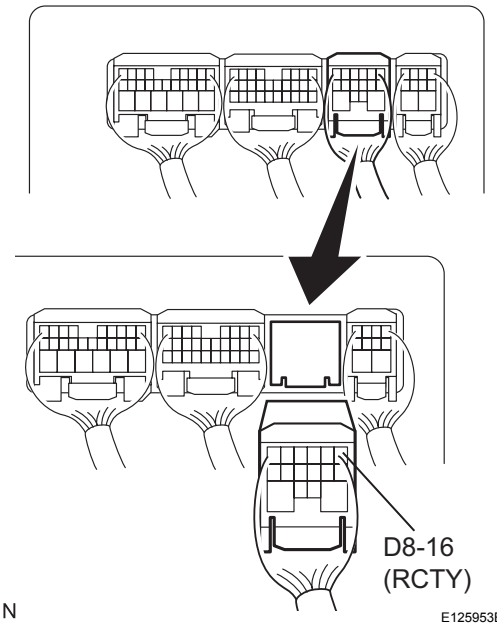

(a) Turn the ignition switch off.
(b) Disconnect the instrument panel J/B (IO) connector and the multiplex network body ECU (D8) connector.
(c) Measure the resistance according to the value(s) in the table below.

Resistance

Tester Connection	Condition	Specified Condition
IO-7 (LCTY) - Body ground	Rear door (LH) is open	Below 1 Ω
IO-7 (LCTY) - Body ground	Rear door (LH) is closed	10 kΩ or higher
D8-16 (RCTY) - Body ground	Rear door (RH) is open	Below 1 Ω
D8-16 (RCTY) - Body ground	Rear door (RH) is closed	10 kΩ or higher

NG → **Go to step 3**

OK

PROCEED TO NEXT CIRCUIT INSPECTION SHOWN IN PROBLEM SYMPTOMS TABLE

3	**INSPECT REAR DOOR COURTESY LIGHT SWITCH ASSEMBLY**

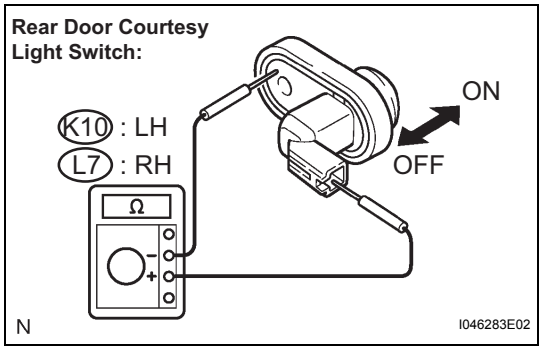

(a) Remove the rear door courtesy light switch.
(b) Measure the resistance according to the value(s) in the table below.

Resistance

Tester Connection	Condition	Specified Condition
1 - Body ground	Switch ON (Shaft is not pressed)	Below 1 Ω
1 - Body ground	Switch OFF (Shaft is pressed)	10 kΩ or higher

NG → **REPLACE REAR DOOR COURTESY LIGHT SWITCH ASSEMBLY**

OK

REPAIR OR REPLACE HARNESS OR CONNECTOR (BETWEEN MULTIPLEX NETWORK BODY ECU, BODY GROUND - REAR DOOR)

DL

Luggage Compartment Door Courtesy Switch Circuit

DESCRIPTION

The multiplex network body ECU detects the luggage compartment door open or closed status based on signals from the luggage compartment door courtesy light switch (luggage room light).

WIRING DIAGRAM

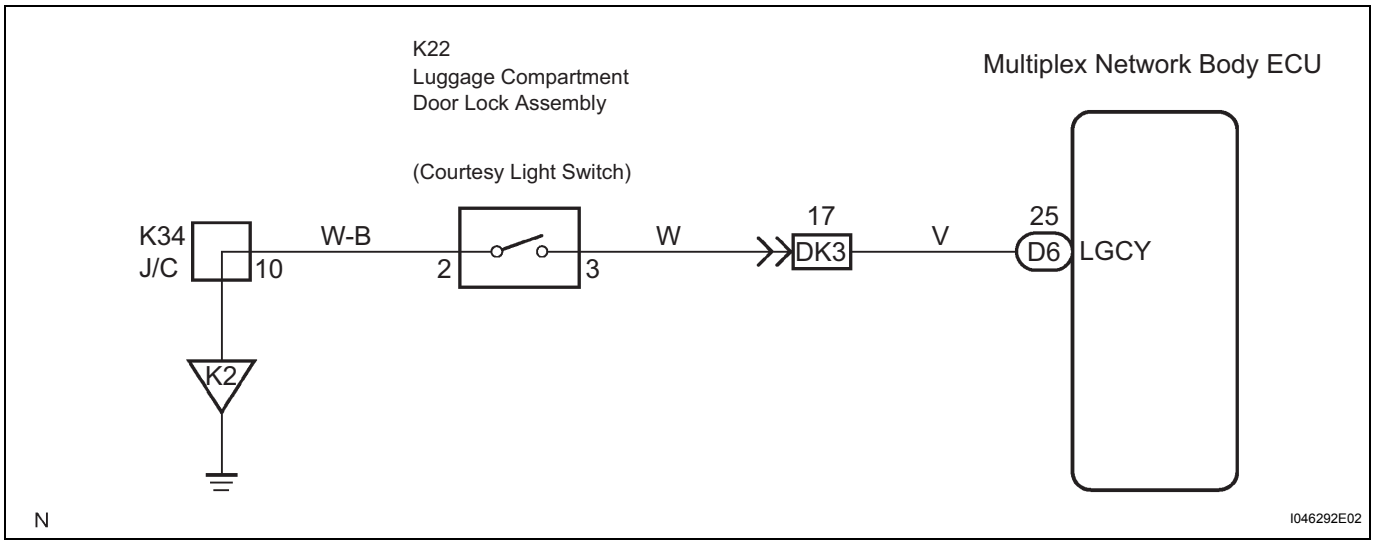

INSPECTION PROCEDURE

HINT:
Start the inspection from step 1 when using the intelligent tester and start from step 2 when not using the intelligent tester.

1	READ VALUE OF INTELLIGENT TESTER (LUGGAGE COMPARTMENT DOOR COURTESY LIGHT SWITCH)

(a) Connect the intelligent tester to the DLC3.
(b) Turn the ignition switch on (IG) and turn the intelligent tester main switch on.
(c) Select the items below in the "DATA LIST" and read the display on the intelligent tester.

BODY:

Item	Measurement Item/Display (Range)	Normal Condition	Diagnostic Note
LUGG COURTESY SW	Luggage compartment door courtesy light switch/ON or OFF	ON: Door is open OFF: Door is closed	-

OK:
When the luggage compartment door is operated, the display changes as shown above.

NG → **Go to step 2**

OK

PROCEED TO NEXT CIRCUIT INSPECTION SHOWN IN PROBLEM SYMPTOMS TABLE

2	INSPECT MULTIPLEX NETWORK BODY ECU (LGCY TERMINAL)

Multiplex Network Body ECU

Wire Harness View:

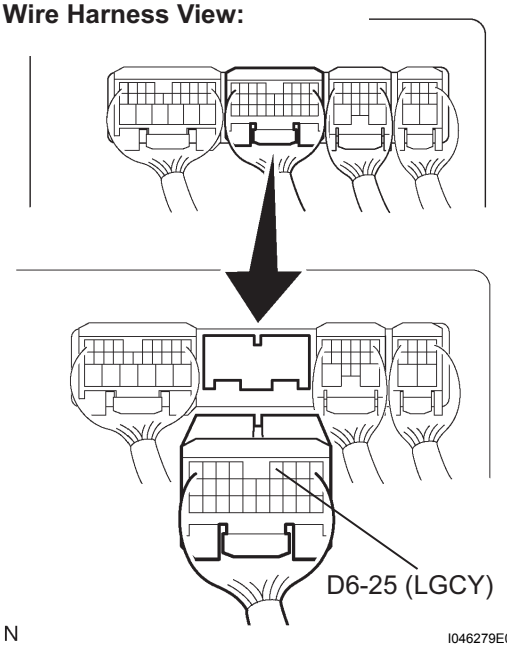

(a) Turn the ignition switch off.
(b) Disconnect the multiplex network body ECU (D6) connectors.
(c) Measure the resistance according to the value(s) in the table below.

Resistance

Tester Connection	Condition	Specified Condition
D6-25 (LGCY) - Body ground	Luggage compartment light is ON (Luggage compartment door is open (unlocked))	Below 1 Ω
D6-25 (LGCY) - Body ground	Luggage compartment light is OFF (Luggage compartment door is closed (locked))	10 kΩ or higher

NG → **Go to step 3**

OK

PROCEED TO NEXT CIRCUIT INSPECTION SHOWN IN PROBLEM SYMPTOMS TABLE

DL

3	INSPECT LUGGAGE COMPARTMENT DOOR LOCK ASSEMBLY

Luggage Compartment Door Lock Assembly:

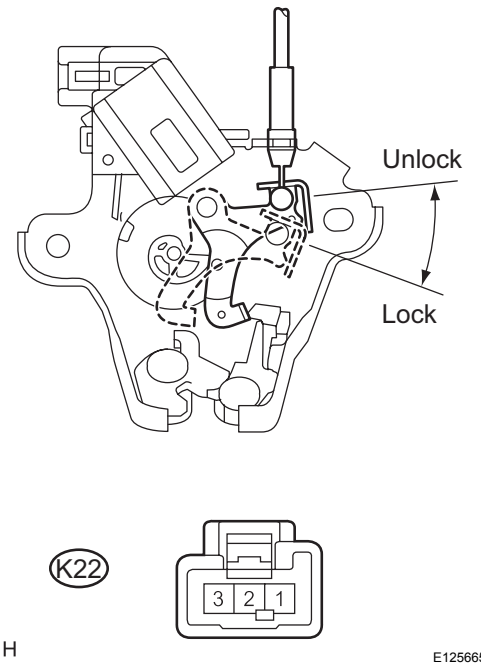

(a) Remove the luggage compartment door lock assembly.
(b) Measure the resistance according to the value(s) in the table below.

Resistance

Tester Connection	Condition	Specified Condition
K22-2 - K22-3	Unlock position	Below 1 Ω
K22-2 - K22-3	Lock position	10 kΩ or higher

NG → **REPLACE LUGGAGE COMPARTMENT DOOR LOCK ASSEMBLY (LUGGAGE COMPARTMENT DOOR COURTESY LIGHT SWITCH)**

OK

REPAIR OR REPLACE HARNESS OR CONNECTOR (BODY ECU, BODY GROUND - COURTESY SWITCH)

DL

Wireless Door Lock Buzzer Circuit

DESCRIPTION

The multiplex network body ECU activates the wireless door lock buzzer when detecting a lock/unlock signal from the door control transmitter.

WIRING DIAGRAM

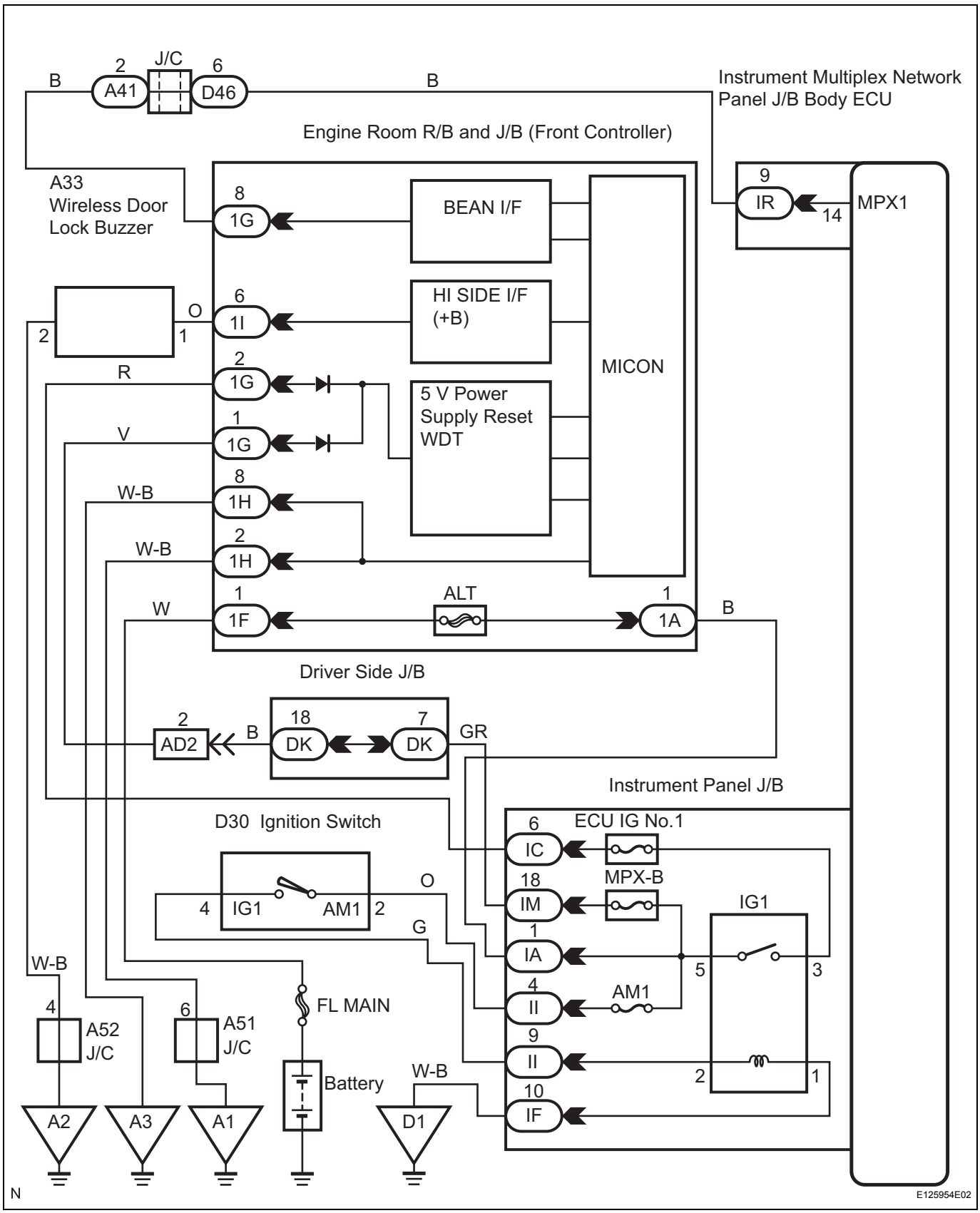

INSPECTION PROCEDURE

HINT:
The wireless door lock buzzer circuit uses BEAN for communication. If there are malfunctions in this circuit, check for DTCs in the multiplex communication system.

1	CHECK FRONT CONTROLLER

(a) Check if the front controller properly controls each function (lighting, wiper, buzzer, etc.).

Result

Condition	Proceed to
OK	A
NG (All functions (lighting, wiper, buzzer, etc.) are not controlled.)	B
NG (Only buzzer is not controlled.)	C

B → REPAIR OR REPLACE HARNESS OR CONNECTOR (POWER SOURCE OR GROUND CIRCUIT)

C → Go to step 2

A

PROCEED TO NEXT CIRCUIT INSPECTION SHOWN IN PROBLEM SYMPTOMS TABLE

2	INSPECT WIRELESS DOOR LOCK BUZZER

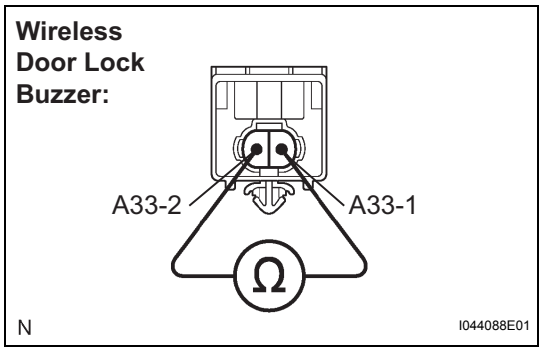

(a) Disconnect the wireless door lock buzzer connector.
(b) Measure the resistance according to the value(s) in the table below.
HINT:
The buzzer circuit is built into the ECU, not into the buzzer, itself. When battery voltage is applied directly to the buzzer, the buzzer will not sound.

Resistance

Tester Connection	Condition	Specified Condition
A33-1 - A33-2	Always	Approx. 1 kΩ

NG → REPLACE WIRELESS DOOR LOCK BUZZER

OK

3	CHECK HARNESS AND CONNECTOR (BETWEEN FRONT CONTROLLER, BODY GROUND AND DOOR LOCK BUZZER)

Engine Room R/B and J/B (Wire Harness Side) Connector Front View:

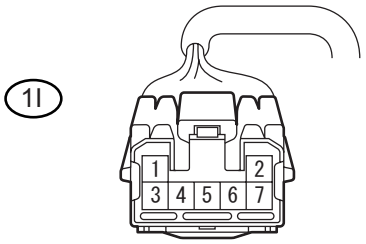

Wireless Door Lock Buzzer (Wire Harness Side) Connector Front View:

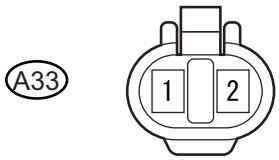

H

E125955E01

(a) Disconnect the engine room R/B and J/B (1I) connector.
(b) Measure the resistance according to the value(s) in the table below.

Resistance

Tester Connection	Condition	Specified Condition
1I-6 - A33-1	Always	Below 1 Ω
1I-6 - Body ground	Always	10 kΩ or higher
A33-2 - Body ground	Always	Below 1 Ω

NG → **REPAIR OR REPLACE HARNESS OR CONNECTOR**

OK

PROCEED TO NEXT CIRCUIT INSPECTION SHOWN IN PROBLEM SYMPTOMS TABLE

Luggage Compartment Door Opener Circuit

DESCRIPTION

The multiplex network body ECU operates the luggage compartment door opener motor when a luggage compartment door open (trunk opener) signal from the transmitter is detected.

WIRING DIAGRAM

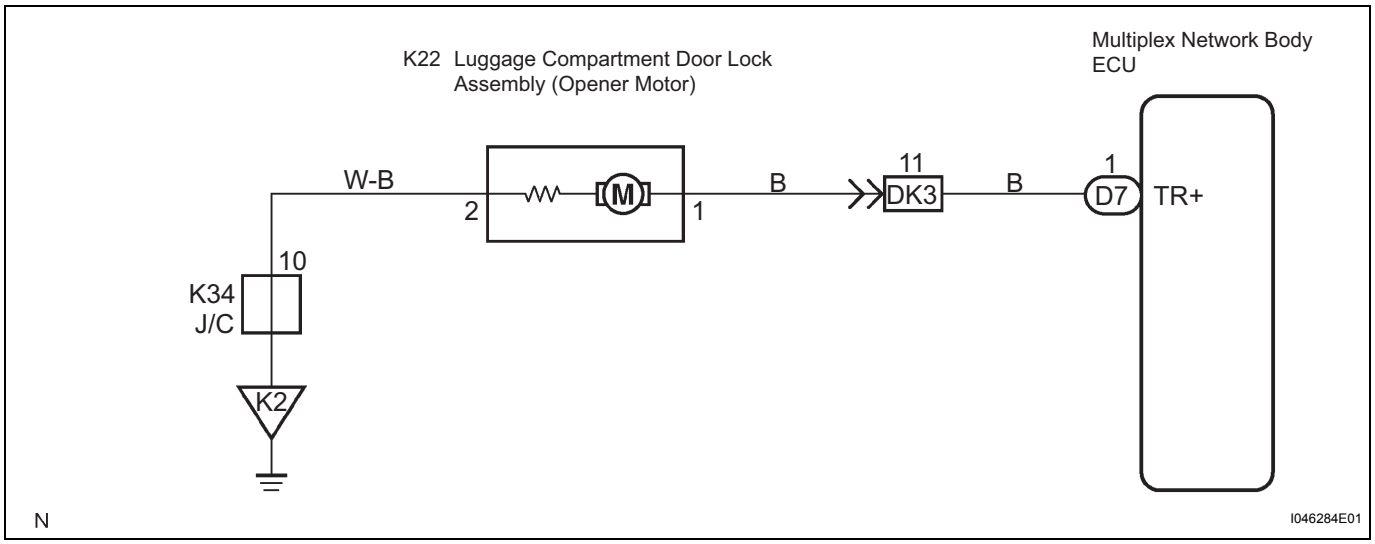

INSPECTION PROCEDURE

HINT:

Start the inspection from step 1 when using the intelligent tester and start from step 2 when not using the intelligent tester.

1	PERFORM ACTIVE TEST BY INTELLIGENT TESTER (LUGGAGE COMPARTMENT DOOR OPENER MOTOR)

(a) Connect the intelligent tester to the DLC3.
(b) Turn the ignition switch on (IG) and turn the intelligent tester main switch on.
(c) Select "ACTIVE TEST" mode on the intelligent tester.

BODY:

Item	Vehicle Condition / Test details	Diagnostic Note
TRUNK / BDOR OPEN	Turns luggage compartment door opener motor ON/OFF	Observe luggage compartment door

(d) Check that the luggage compartment door can be opened and closed when the door opener motor is turned on and off.

OK:

The luggage compartment door opens and closes in accordance with the intelligent tester operation.

NG	Go to step 2

OK

PROCEED TO NEXT CIRCUIT INSPECTION SHOWN IN PROBLEM SYMPTOMS TABLE

2	INSPECT MULTIPLEX NETWORK BODY ECU (TR+ TERMINAL)

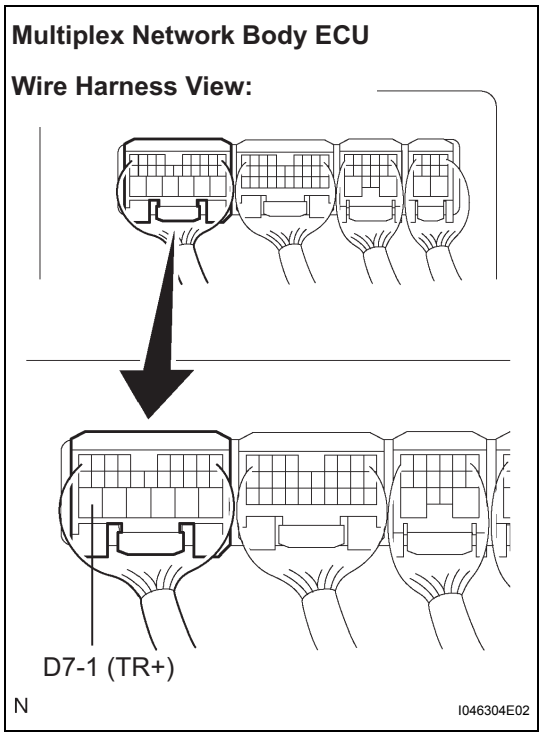

(a) Measure the voltage according to the value(s) in the table below.

Voltage

Tester Connection	Condition	Specified Condition
D7-1 (TR+) - Body ground	Luggage compartment door is closed (locked)	Below 1 V
D7-1 (TR+) - Body ground	Luggage compartment door is opened (unlocked)	10 to 14 V (*1)

(*1): When operating the motor.

NG → **Go to step 3**

OK

PROCEED TO NEXT CIRCUIT INSPECTION SHOWN IN PROBLEM SYMPTOMS TABLE

3	CHECK HARNESS AND CONNECTOR (BETWEEN BODY ECU, BODY GROUND AND OPENER MOTOR)

Multiplex Network Body ECU

Wire Harness View:

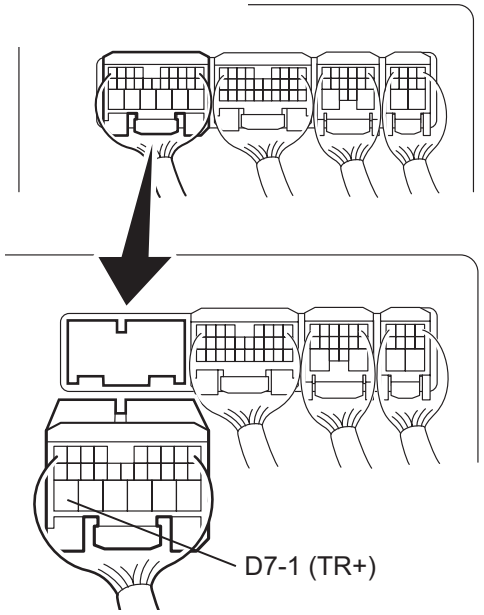

Luggage Compartment Door Opener Motor

(Wire Harness Side) Connector Front View:

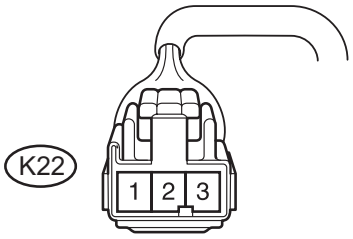

N

E125959E01

(a) Turn the ignition switch off.
(b) Disconnect the multiplex network body ECU (D7) connector.
(c) Remove the luggage compartment door lock assembly.
(d) Measure the resistance according to the value(s) in the table below.

Resistance

Tester Connection	Condition	Specified Condition
D7-1 (TR+) - K22-1	Always	Below 1 Ω
D7-1 (TR+) - Body ground	Always	10 kΩ or higher
K22-2 - Body ground	Always	Below 1 Ω

DL

NG → **REPAIR OR REPLACE HARNESS OR CONNECTOR**

OK

REPLACE LUGGAGE COMPARTMENT DOOR LOCK ASSEMBLY (LUGGAGE COMPARTMENT DOOR OPENER MOTOR)

Power Source Circuit

DESCRIPTION

This is the power circuit for the multiplex network body ECU.
Power is supplied to the multiplex network body ECU via the BECU circuit. The BECU circuit is used as the power source circuit of the ECU.

WIRING DIAGRAM

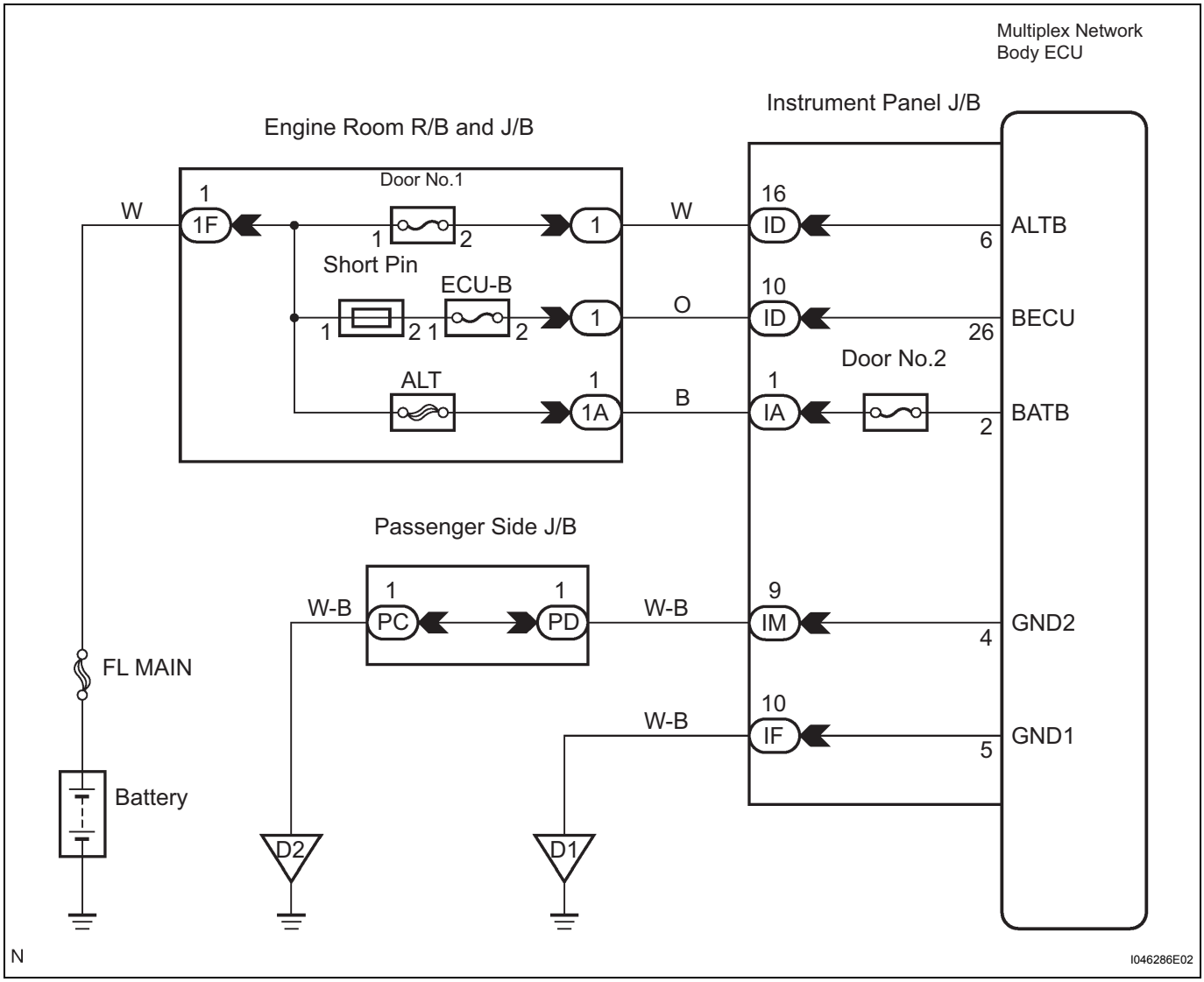

INSPECTION PROCEDURE

1 INSPECT MULTIPLEX NETWORK BODY ECU (BATB, BECU - ALTB TERMINALS)

Instrument Panel J/B (Wire Harness Side) Connector Front View:

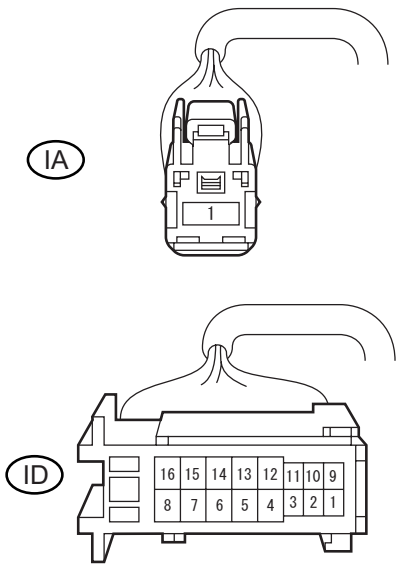

(a) Disconnect the instrument panel J/B (IA, ID) connectors.
(b) Measure the voltage according to the value(s) in the table below.

Voltage

Tester Connection	Condition	Specified Condition
IA-1 (BATB) - Body ground	Always	10 to 14 V
ID-10 (BECU) - Body ground	Always	10 to 14 V
ID-16 (ALTB) - Body ground	Always	10 to 14 V

NG → **REPAIR OR REPLACE HARNESS OR CONNECTOR (BATB, BECU OR ALTB CIRCUIT)**

OK

2 INSPECT MULTIPLEX NETWORK BODY ECU (GND TERMINAL)

Instrument Panel J/B (Wire Harness Side)Connector Front View:

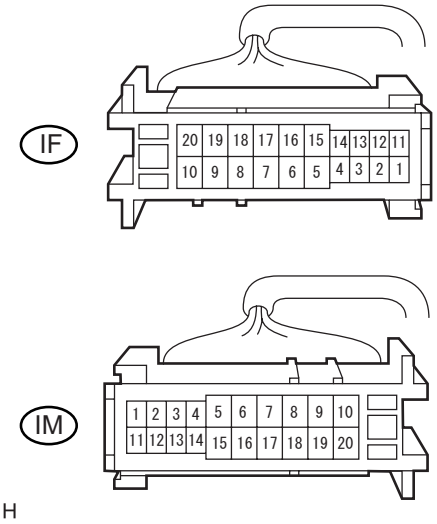

(a) Disconnect the instrument panel J/B (IF, IM) connectors.
(b) Measure the resistance according to the value(s) in the table below.

Resistance

Tester Connection	Condition	Specified Condition
IF-10 (GND1) - Body ground	Always	Below 1 Ω
IM-9 (GND2) - Body ground	Always	Below 1 Ω

NG → **REPAIR OR REPLACE HARNESS OR CONNECTOR (GND CIRCUIT)**

DL

OK

PROCEED TO NEXT CIRCUIT INSPECTION SHOWN IN PROBLEM SYMPTOMS TABLE

Unlock Warning Switch Circuit

DESCRIPTION

The multiplex network body ECU determines whether the key is inserted into the ignition key cylinder based on signals from the unlock warning switch.
Signals from the unlock warning switch are used to operate wireless door lock control system functions such as automatic lock and door ajar warning.

WIRING DIAGRAM

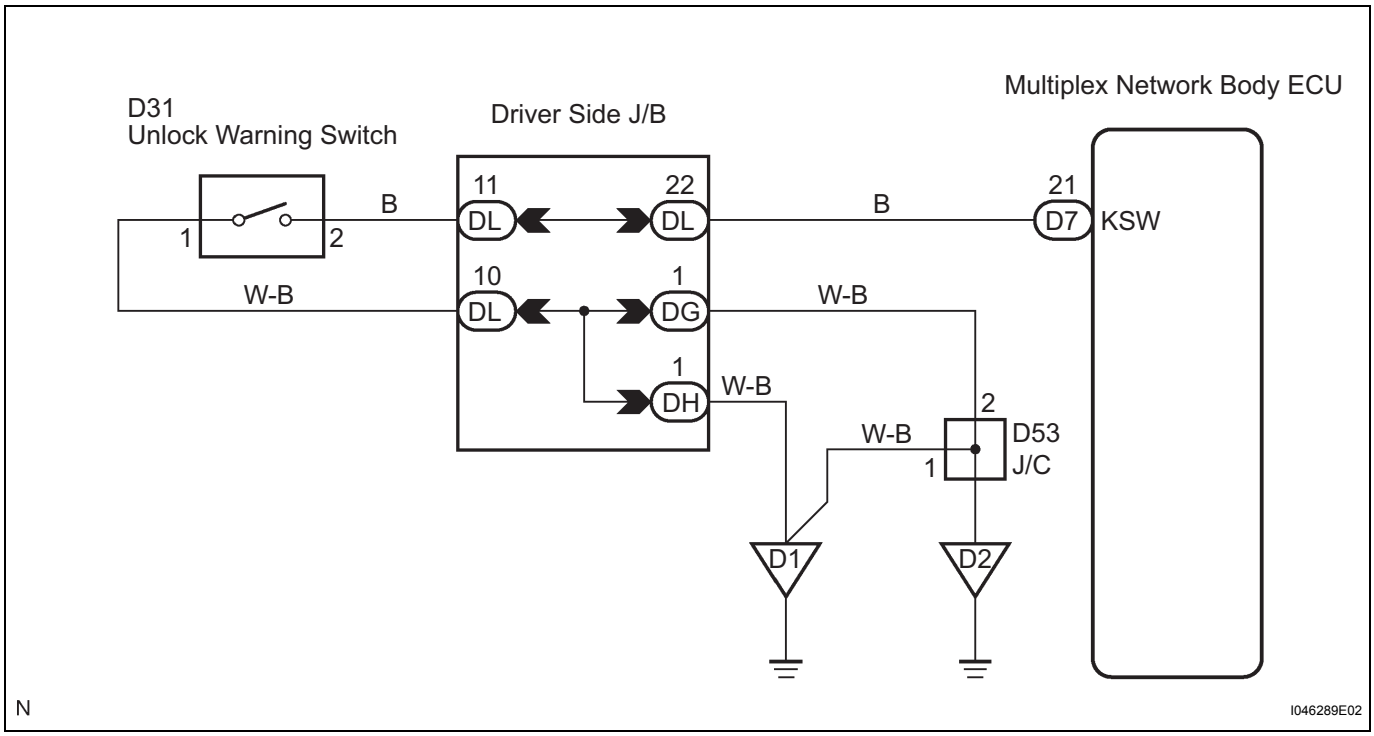

INSPECTION PROCEDURE

HINT:
Start the inspection from step 1 when using the intelligent tester and start from step 2 when not using the intelligent tester.

1	READ VALUE ON INTELLIGENT TESTER (UNLOCK WARNING SWITCH)

(a) Connect the intelligent tester to the DLC3.
(b) Turn the ignition switch on (IG) and turn the intelligent tester main switch on.
(c) Select the items below in the "DATA LIST" and read the display on the intelligent tester.

BODY:

Item	Measurement Item/Display (Range)	Normal Condition	Diagnostic Note
KEY UNLK WRN SW	Unlock warning switch/ON or OFF	ON: Ignition key inserted OFF: Ignition key is not inserted	-

OK:
When the ignition switch is operated, the display changes as shown above.

NG → Go to step 2

OK

PROCEED TO NEXT CIRCUIT INSPECTION SHOWN IN PROBLEM SYMPTOMS TABLE

2 INSPECT MULTIPLEX NETWORK BODY ECU (KSW TERMINAL)

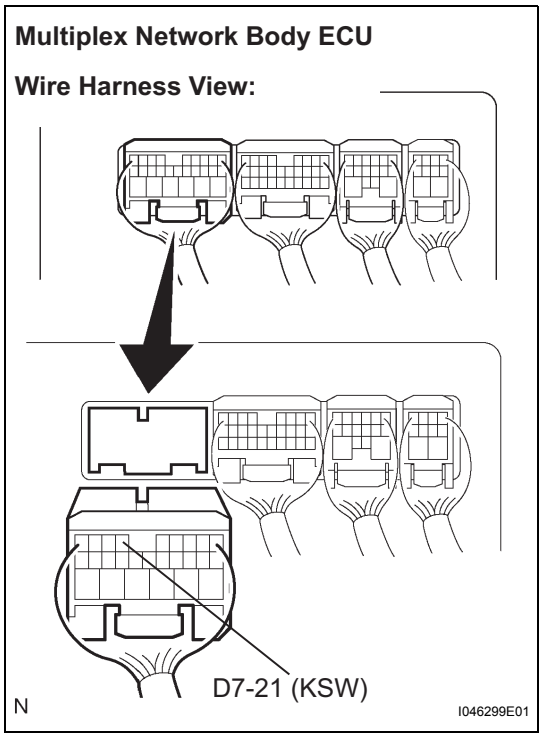

(a) Turn the ignition switch off.
(b) Disconnect the multiplex network body ECU (D7) connector.
(c) Measure the resistance according to the value(s) in the table below.

Resistance

Tester Connection	Condition	Specified Condition
D7-21 (KSW) - Body ground	Ignition key is inserted	Below 1 Ω
D7-21 (KSW) - Body ground	Ignition key is not inserted	10 kΩ or higher

NG → Go to step 3

OK

PROCEED TO NEXT CIRCUIT INSPECTION SHOWN IN PROBLEM SYMPTOMS TABLE

3	INSPECT UNLOCK WARNING SWITCH

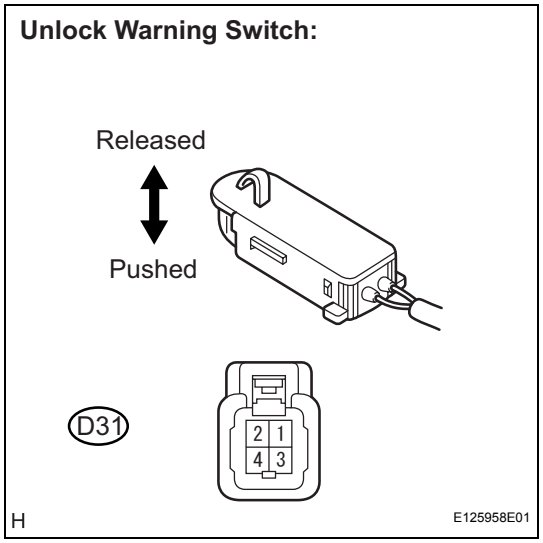

(a) Disconnect the unlock warning switch connector.
(b) Measure the resistance according to the value(s) in the table below.

Resistance

Tester Connection	Condition	Specified Condition
D31-1 - D31-2	Switch pushed (Ignition key is inserted)	Below 1 Ω
D31-1 - D31-2	Switch released (Ignition key is not inserted)	10 kΩ or higher

NG → **REPLACE UNLOCK WARNING SWITCH**

OK

REPAIR OR REPLACE HARNESS OR CONNECTOR (BETWEEN BODY ECU, BODY GROUND - UNLOCK WARNING SWITCH)

SMART KEY SYSTEM

PRECAUTION

NOTICE:
When disconnecting the negative (-) battery terminal, initialize the following system(s) after the terminal is reconnected.

System	See procedure
Power Window Control System	IN-29
Sliding Roof Control System	

1. PRECAUTIONS WHEN USING THE INTELLIGENT TESTER

(a) When troubleshooting the smart key system using the intelligent tester with the engine switch off, connect the intelligent tester to the vehicle and repeat turning any of the courtesy light switches on and off until communication between the tester and the vehicle begins (the interval between ON and OFF should be less than 1.5 sec.).

(b) After DTCs are all cleared, check if the trouble occurs again 6 seconds after the engine switch is turned on (IG).

2. PRECAUTIONS FOR EACH FUNCTION

(a) Precautions for the key:
The key is a precision instrument. Be sure to observe the following:
(1) Do not apply a strong impact.
(2) Do not keep the key in a high temperature area for a long time.
(3) Do not use an ultrasonic washing machine to clean the key.
(4) Keep the key away from magnets or magnetized items during use.
(5) Do not attach any stickers to the key.

(b) Precautions for entry unlock function:
- If the door handle is touched with gloved hands, the response may be delayed.
- Make sure that the doors are unlocked by the entry unlock function before puling on the door handle to open the doors.
- The doors may not be unlocked if the key is suddenly brought up to the vehicle or the door handle is lightly touched. If the doors cannot be unlocked, the door unlock operation will be repeated 4 times. At this time, the door may not be unlocked with the door handle being pulled for some mechanical reason. Be sure to put the handle back to the original position if the door cannot be opened by puling on the handle.

- If the key is brought too close to the transmitter on the outside of the vehicle, the door may not be unlocked because the key cannot react to the strong radio wave output from the transmitter.
- If the key is within the detection area outside of the vehicle, the door can be unlocked even when anyone other than the person who is carrying the key holds the door handle. However, the doors other that the door that the codes match will not be unlocked. (If the key is within the driver's door detection area outside of the vehicle, the door will be unlocked when anyone who is carrying the key holds the drive's door handle. However, if any door handles other than that of the driver's door is held, the doors will not be unlocked.)
- If the door is not opened after the door unlock operation, the door automatically locks after approximately 30 seconds.
- If a large amount of water is applied to the door handle, because of a car wash or heavy rain, with the key in the detection area outside of the vehicle, the antenna built into the outside handle will react to unlock the door. However, the door will be locked again after approximately 30 seconds if the door is not opened.
- If the key of the smart key system is used while it is being carried with the key of another smart key system, the time before the entry unlock operation will become longer than usual. This is not a malfunction.

(c) Precautions for entry lock function:

- Be sure to firmly push the lock switch on the door handle. The door may not lock if it is lightly pushed.
- If the key is brought too close to the vehicle, such as to the windows or door handle, the entry lock function may not operate. Furthermore, the key left alarm may sound and the entry unlock will not be permitted. In this case, move the key away from the vehicle and perform the entry lock operation. Then, perform the entry unlock operation again.
- Do not touch the lock switch while opening or closing the door. If the lock switch is pushed with the key carried while opening or closing the door, the door ajar alarm will sound (peeping sound for 10 seconds to the outside of the vehicle).
- Be sure to carry the key. The key left prevention function may not operate if the key is on the instrument panel, rear tray or floor, or in the glove box, resulting in key confinement.

- If the door is locked with the operation linked to the key, wireless operation or manual operation while the key is in the action areas of the cabin or luggage compartment, the entry unlock will not be permitted. If the wireless door lock operation is performed near the window or outside handle, the entry unlock may no be performed. In this case, perform the wireless door unlock operation to unlock the door.
- Entry lock will not be permitted for 3 seconds after the door lock operation (including entry lock and wireless operation).

(d) Precautions for the push button start function:

- Before starting the engine, firmly depress the brake pedal until the indicator of the engine switch lights up in green.
- The power source condition (OFF, ACC, ON) is always stored in the vehicle. After the battery is removed and reinstalled, the power source condition before battery removal will be restored. Be sure to turn the engine switch off before disconnecting the cable from the battery terminal. Be careful when the power source condition before the battery becomes dead cannot be confirmed.
- After the battery is removed and reinstalled, be sure to wait 10 seconds or more before engine start. The engine may not start immediately after the battery is reinstalled.
- If the key is held over the engine switch to start the engine because the key battery has died, the following warning will sound:

(1) Driver's door open → close:

- Warning to inform that the P position power remains on
- Warning to inform that any of power for the shift positions other than P remains on

(2) Doors other than the driver's door open → close:

- Warning to inform that any of the passengers is carrying the key out of the vehicle

HINT:

These warnings will sound because whether the key is in the cabin or not cannot be determined. They do not indicate system malfunctions.

(e) Precautions for the function to prevent key confirmation in the luggage compartment:

- Do not place the key in the luggage compartment.
  If the luggage compartment is closed with the key in it when all the doors are locked, the alarm the inform key confinement will operate (peeping sound for 2 seconds to the outside of the vehicle). However, the alarm may no operate for some reason relating to the key location (near the spare tire or the side of the luggage compartment), the key condition (covered with metal or near metal), or ambient radio waves.
- If the luggage compartment is closed with the key in it when any of the doors is unlocked or open, the key confinement prevention function will not operate. In this case, use the luggage compartment opener in the cabin to open the luggage compartment and take out the key.
- The alarm may erroneously operate in the following conditions. If you can confirm that you carry the key or the key is in the cabin, there is no problem. The entry luggage compartment open function may not operate if the alarm erroneously operates. In this case, use the luggage compartment opener in the cabin or perform wireless operation to open the luggage compartment.
  (a) The key is brought into the cabin after the luggage compartment is opened, then the luggage compartment is closed.
  (b) The luggage compartment is closed by the person who is carrying the key.
    * If the alarm operates when the luggage compartment is closed with all the doors locked, the key must be in the cabin or luggage compartment. Check the cabin and luggage compartment to find the key.
    * If the luggage compartment is closed with the key in it when all the doors are locked, the alarm will sounds and the luggage compartment can be opened. This may cause vehicle theft.
    * Do not open or close the luggage compartment after all the doors are locked if you want to keep the spare keys in the cabin. As a result, the alarm may sound and the luggage compartment can be opened, causing vehicle theft.

(f) Precautions for the battery built into the key and the vehicle battery:
- When the door is being locked, the vehicle battery is used to transmit a radio wave. The battery may be dead if the vehicle remains stopped for a long time. If the vehicle is not used for a long time, remove the battery from the vehicle or cancel the smart key system (For the cancellation procedure, See page DL-156).
- When the door is being locked with the key in the action area of the door oscillator, the battery is used for regular communication between the key and vehicle. If the vehicle is not used, keep the key away from the vehicle (more than 2 m (6.6 ft)).

(g) Precautions for the smart unlock mode switching function:
- Do not perform the smart unlock mode switching within a 1 m (3.3 ft) area around the vehicle.
- The smart unlock mode switching may not be performed within 5 seconds after the previous switching. Wait 5 seconds or more before performing the next switching.

(h) Precautions for the steering lock function:
- If the vehicle skids for some reason such as engine stall, do not open the doors until the vehicle completely stops safely. If any of the doors is opened during vehicle skid, the steering lock may operate.
- If the engine start and stop are repeated in a short interval, the engine may not be started. Wait 10 seconds or more and then start the engine.
- Be careful when the battery is dead because the steering lock does not operate at this time.
- After replacing the steering lock assembly, open and close the driver's door. The engine may not start if the driver's door is not opened and closed.

PARTS LOCATION

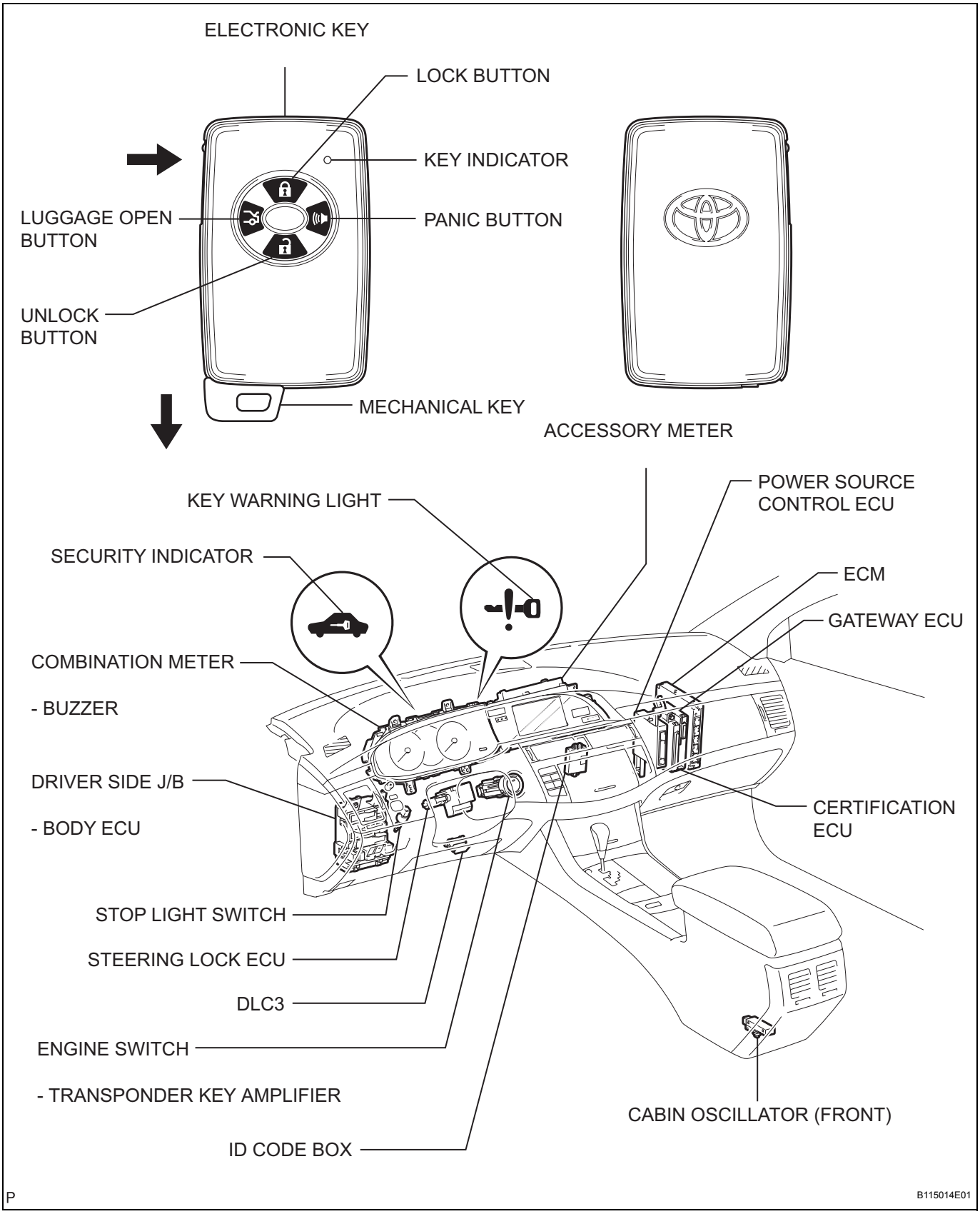

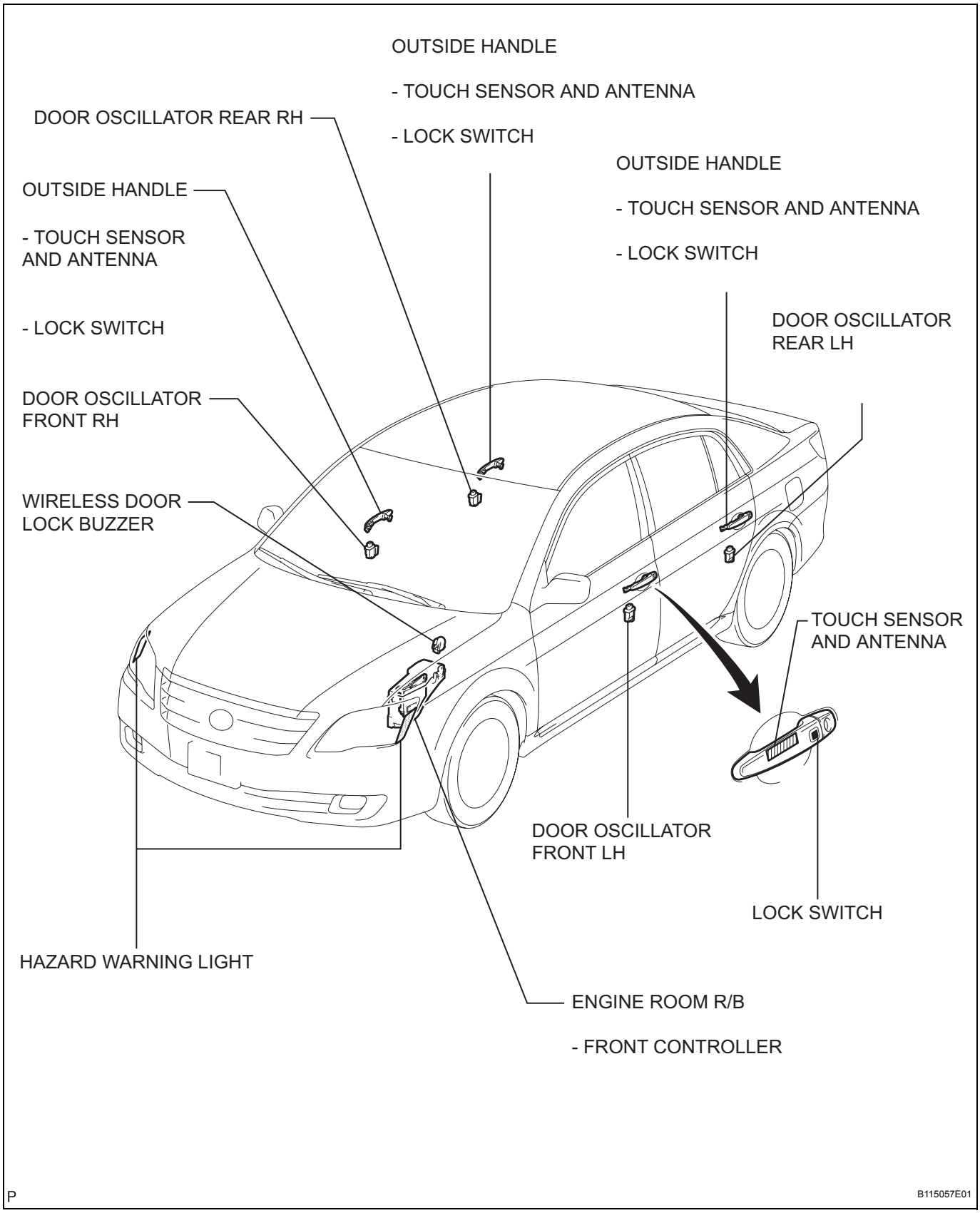
OUTSIDE HANDLE
- TOUCH SENSOR AND ANTENNA
- LOCK SWITCH
DOOR OSCILLATOR REAR RH
OUTSIDE HANDLE
- TOUCH SENSOR AND ANTENNA
- LOCK SWITCH
OUTSIDE HANDLE
- TOUCH SENSOR AND ANTENNA
- LOCK SWITCH
DOOR OSCILLATOR REAR LH
DOOR OSCILLATOR FRONT RH
WIRELESS DOOR LOCK BUZZER
TOUCH SENSOR AND ANTENNA
DOOR OSCILLATOR FRONT LH
LOCK SWITCH
HAZARD WARNING LIGHT
ENGINE ROOM R/B
- FRONT CONTROLLER
P
B115057E01

DL

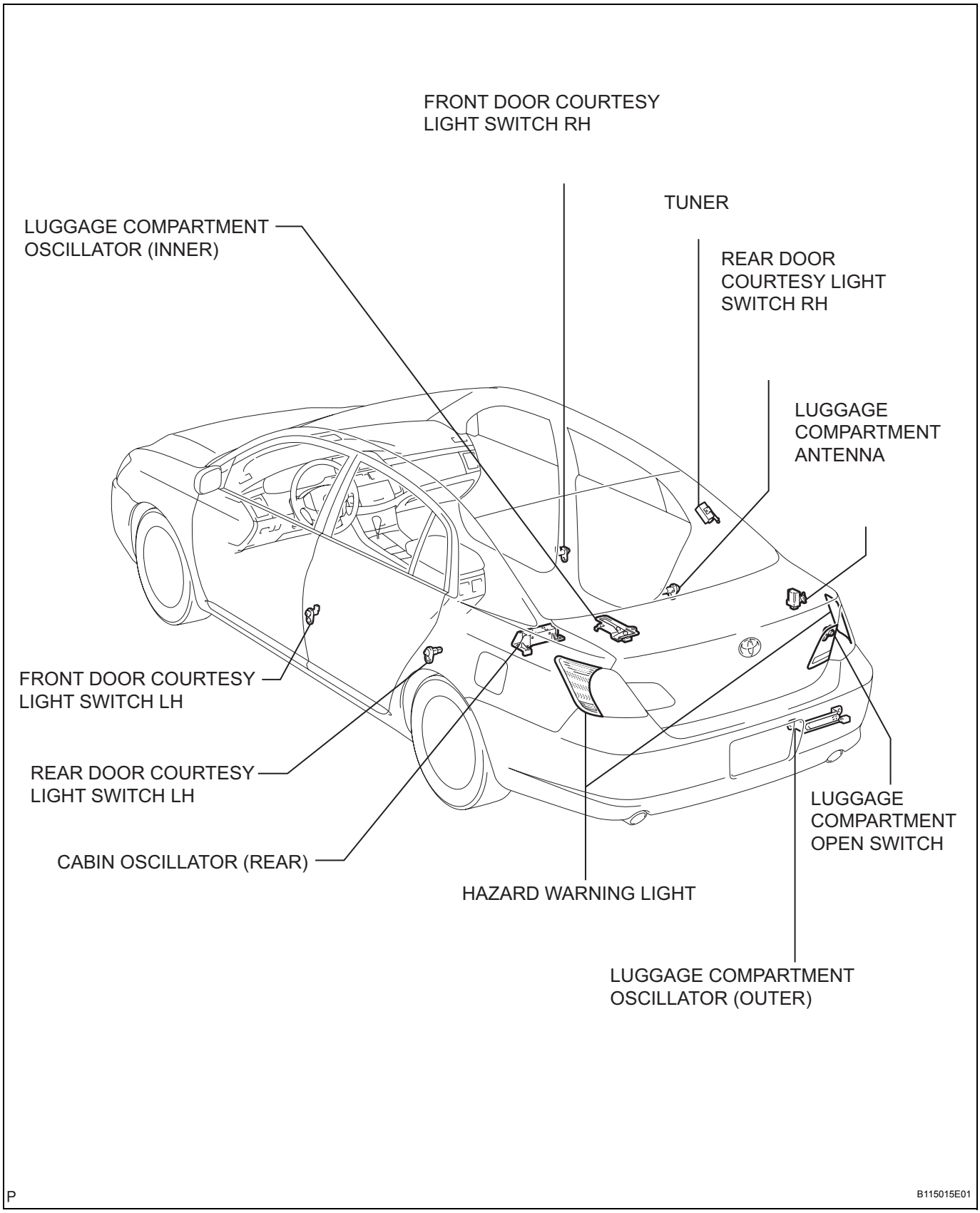
FRONT DOOR COURTESY LIGHT SWITCH RH
TUNER
LUGGAGE COMPARTMENT OSCILLATOR (INNER)
REAR DOOR COURTESY LIGHT SWITCH RH
LUGGAGE COMPARTMENT ANTENNA
FRONT DOOR COURTESY LIGHT SWITCH LH
REAR DOOR COURTESY LIGHT SWITCH LH
CABIN OSCILLATOR (REAR)
LUGGAGE COMPARTMENT OPEN SWITCH
HAZARD WARNING LIGHT
LUGGAGE COMPARTMENT OSCILLATOR (OUTER)
P
B115015E01

SYSTEM DIAGRAM

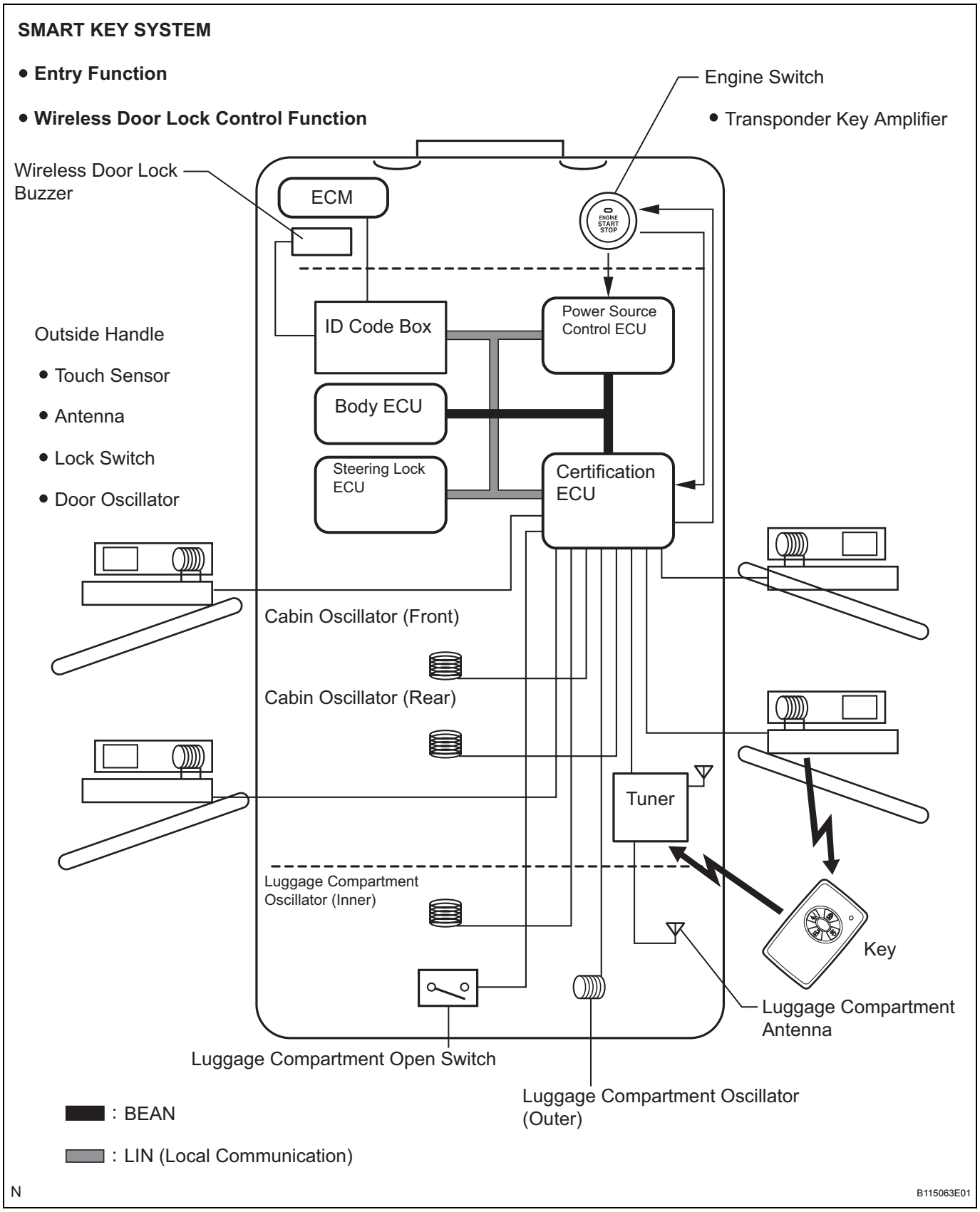

DL

SMART KEY SYSTEM

- Immobilizer Function

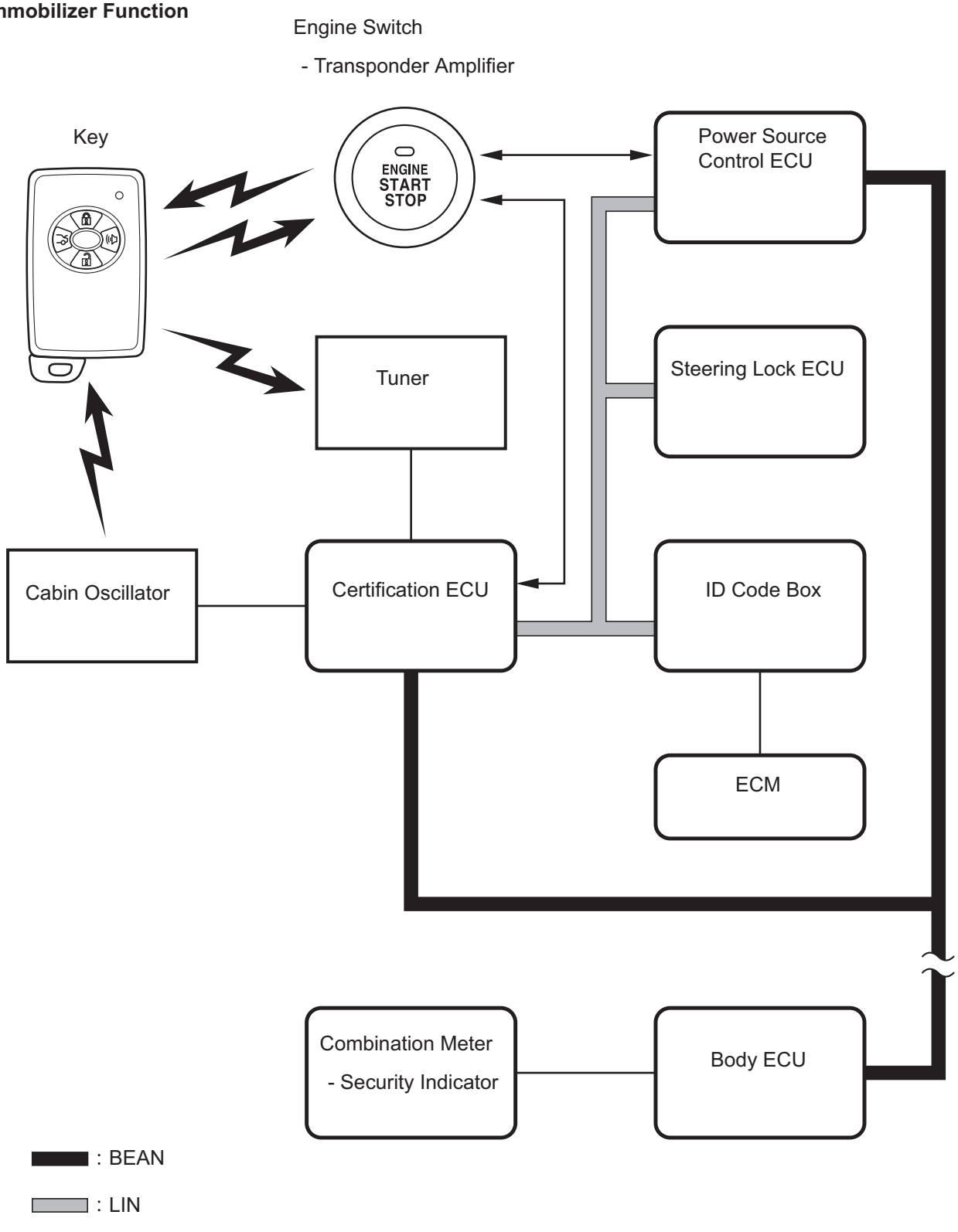

N

E125960E01

ENTRY FUNCTION

Transmitting ECU (Transmitter)	Receiving ECU (Receiver)	Signals	Communication method
Combination meter	Certification ECU	• Vehicle speed signal • Travel distance information	BEAN

Transmitting ECU (Transmitter)	Receiving ECU (Receiver)	Signals	Communication method
Power source control ECU	Certification ECU	• Alarm control signal • Power source control ECU information	BEAN
Combination meter	Multi-display	• Door open warning signal • Smart key system warning light signal	BEAN / AVC-LAN
Certification ECU	Combination meter	• Smart key system warning light signal • Shift position warning signal • "Single beep" sound control signal • "Intermittent beep" sound control signal • "Beep buzzer" sound control signal	BEAN
Body ECU	Certification ECU	• Door lock / unlock position signal • Courtesy light switch signal • Smart key system control signal • Alarm signal • Destination signal • Vehicle type handle signal • Door key operation switch signal • Door lock output operate signal • Wireless door lock / unlock signal • DTC erase signal • DTC response signal	BEAN
ECM	Certification ECU	Engine speed signal	BEAN / CAN

WIRELESS DOOR CONTROL FUNCTION

Transmitting ECU (Transmitter)	Receiving ECU (Receiver)	Signals	Communication method
Power source control ECU	Certification ECU	Key code recognition signal	BEAN
Certification ECU	Body ECU	Wireless buzzer control signal	BEAN
Body ECU	Certification ECU	Alarm signal	BEAN

START FUNCTION

Transmitting ECU (Transmitter)	Receiving ECU (Receiver)	Signals	Communication method
Combination meter	Power source control ECU	• Vehicle speed signal • Travel distance information	BEAN
Combination meter	Multi-display	• Door open warning signal • Shift position warning signal • Smart key system warning light signal	BEAN / AVC-LAN
Power source control ECU	Body ECU	Security control signal	BEAN
Body ECU	Power source control ECU	• Engine start switch illumination signal • Stop light switch signal • Courtesy light switch signal • DTC erase signal • DTC response signal	BEAN
ECM	Power source control ECU	• Engine speed signal • Shift P position signal	BEAN / CAN

ENGINE IMMOBILIZER FUNCTION

Transmitting ECU (Transmitter)	Receiving ECU (Receiver)	Signals	Communication method
Combination meter	Multi-display	• Door open warning signal • Smart key system warning light signal	BEAN / AVC-LAN

Transmitting ECU (Transmitter)	Receiving ECU (Receiver)	Signals	Communication method
Certification ECU	Body ECU	• Double lock fail-safe unset signal • Security indicator light flash signal • Security indicator light turn on signal • Immobilizer set / unset signal	BEAN
Power source control ECU	Certification ECU	Key code recognition signal	BEAN
ID code box	Certification ECU	DTC (B2791) signal	LIN
ID code box	Steering lock ECU	• Steering lock release signal • Matching request random number signal	LIN

START KEY SYSTEM

Transmitting ECU (Transmitter)	Receiving ECU (Receiver)	Signals	Communication method
ID code box	Certification ECU	• Matching request random number signal • EEP ROM access malfunction • Model code matching signal • Model code mismatching signal • ECM code receiving status • Engine start permission request signal • Engine start permission response signal • S code matching result signal • S code registration status signal • S code registration mode signal • L code matching result signal • ECM communication signal • The number of registered key response signal • Diagnosis mode switching signal	LIN
Certification ECU	ID code box	• 3 bit code request signal • ID code matching result signal • The number of registered key signal • Vehicle type handle signal	LIN
ID code box	• Certification ECU • Steering lock ECU	• L code registration mode signal • Diagnosis mode request signal • DTC clear request signal	LIN
ID code box	Steering lock ECU	L code registration status signal	LIN
Certification ECU	• Certification ECU • ID code box	Steering lock request signal	LIN
Steering lock ECU	Certification ECU	• Steering unlock signal • Steering lock confirmation • Steering unlock confirmation signal • Diagnosis response signal • Steering lock drive relay signal • Steering unlock drive relay signal • Steering lock motor operation signal	LIN
ID code box	Certification ECU	The number of registered key signal	LIN

Transmitting ECU (Transmitter)	Receiving ECU (Receiver)	Signals	Communication method
Power source control ECU	Certification ECU	• Shift position P signal • Power ON operation status signal • Engine starting status • ACC relay operating status • IG relay operating status	LIN
Power source control ECU	Steering lock ECU	Steering lock relay power supply status	LIN
Steering lock ECU	• Certification ECU • Power source control ECU	• Steering lock catching malfunction signal • Push button start malfunction signal • Engine operation signal	LIN

SYSTEM DESCRIPTION

1. SMART KEY SYSTEM DESCRIPTION

(a) In addition to conventional mechanical key and wireless door lock remote control functions, the smart key system enables door to lock / unlock, steering lock to release, engine to start and luggage compartment to open without operating the key. The only requirement is that the key be in the driver's possession.

- This system is controlled by the certification ECU. When the certification ECU detects the presence of the smart key system in one of the action area, it identifies and checks the ID code, and outputs operation signals to the related ECU in accordance with their functions.
- The detection areas are formed by 8 oscillators (4 door oscillators, 2 luggage compartment oscillators, and 2 cabin oscillators).

2. ACTION AREA

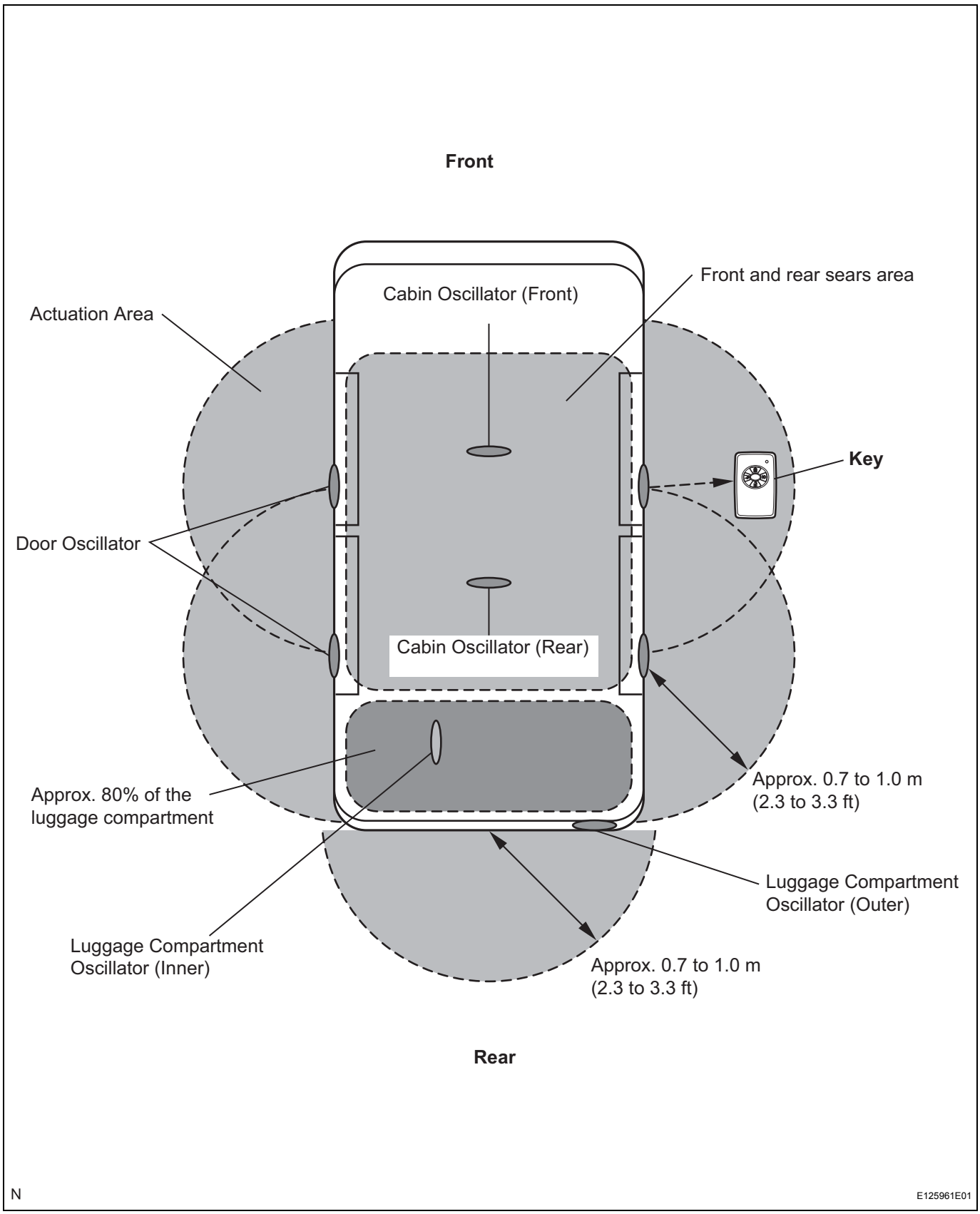

(a) Precautions for the entire system:
- Be sure to carry the key during inspection of the smart key system.

- The key detection area may become small, or the key may not be detected correctly, in the following conditions (As weak radio waves are used to detect the key).
  (a) The battery is dead.
  (b) Any facilities that generate strong radio waves, such as a TV tower, power plant or broadcast station, are located near the inspection site.
  (c) Any wireless applications such as a cellular phone are carried with the key.
  (d) The key is in contact or covered with metal.
  (e) A radio wave keyless entry system is operated near the inspection site.
  (f) The key is located near the device that generates high voltage or noise.
- The key may be difficult to operate for some reason relating to the vehicle body shape.
- The key may not be detected correctly if it is around the vehicle's windows, the door handle or center of the bumper even when it is in the detection area outside the vehicle.
- The key may not be detected correctly if it is on the instrument panel, rear tray or floor, or in the glove box even when it is in the detection area inside the vehicle.
- The engine cannot be started even when the key is in the detection area inside the luggage compartment.
- The key may not operate if the key is not held properly.
- The key emits a weak radio wave. If using a pacemaker, be sure to read the manual of the pacemaker before using the key because this radio wave may affect it.
- The smart key system does not operate in the following conditions:
  (a) The smart key system is cancelled (For detail, See page DL-156).
  (b) The key battery is completely dead (The indicator does not blink by pushing any of the buttons on the key) (For details, See page DL-232).

3. FUNCTION OF MAIN COMPONENTS

Component	Function
Key	The key consists of a mechanical key, the transmitter for the wireless door lock remote control and the transceiver for the smart key system, and a transponder chip for the engine immobilizer control.
Certification ECU	Controls the smart key system in accordance with the signals from each oscillator, various switches, ECUs and key. • Judges and certifies the ID code from the tuner. • Transmits the engine immobilizer unset signal to the ID code box. • Transmits the steering unlock signals to the steering lock ECU.

Component		Function
Power Source Control ECU		Controls the push button start function in accordance with the signals from the various switches, ECUs and combination meter. • Transmits the key verification request signal to the certification ECU in accordance with the engine switch signal, and turns the relays ON and OFF.
ID Code Box		Receives the steering unlock or engine immobilizer unset signals from the certification ECU, certifies them, and transmits each unset signal to the steering lock ECU or ECM.
Body ECU		• Receives the request signal from the certification ECU and actuates the door lock motor to unlock or lock the door. • Transmits each door condition to the certification ECU.
Outside Handle	Antenna	Transmits the request signals.
	Touch Sensor	Detects when a person touches an outside handle inside.
	Lock Switch	Transmits door lock request signals to certification ECU.
	Door Oscillator • Front RH and LH • Rear RH and LH	Receives the request signal from the certification ECU, and forms the actuation area around each door.
Cabin Oscillator • Front and Rear		Receives the request signal from the certification ECU, and forms the actuation area in the vehicle interior.
Luggage compartment Oscillator • Inner		Receives the request signal from the certification ECU, and forms the actuation area in the luggage compartment.
Luggage compartment Oscillator • Outer		Receives the request signal from the certification ECU, and forms the actuation area around the luggage compartment lid.
Tuner		• Receives the ID code from the key in the actuation area and transmits it to certification ECU. • Receives the ID code from the key in the luggage compartment and transmits it to certification ECU.
Luggage compartment Antenna		Receives the ID code from the key in the luggage compartment and transmits it to the tuner.
Outside Rear View Mirror	Foot Light	When the key enters the exterior actuation area, the foot light is illuminated in accordance with the request signal of the certification ECU.
Luggage compartment Open Switch		Transmits a luggage compartment lid open request signal to Certification ECU.
Stop Light Switch		Outputs the state of the brake pedal to the power source control ECU.
Wireless Door Lock Buzzer		When the certification ECU detects human errors such as the following, it warns the driver by sounding the wireless door lock buzzer, illuminating the key warning light and sounding the buzzer in accordance with the request signal from the ECU. **Example:** • The key is taken outside the vehicle. • The driver gets out while the engine is still running. • The driver gets out while the shift is in a position other than "P".
Combination Meter	Key Warning Light	
	Buzzer	
Accessory Meter		

4. CONSTRUCTION AND OPERATION

(a) Key

The key consists of a mechanical key, a transmitter function for the wireless door lock remote control and a transceiver for the smart key system, and a transponder chip for the engine immobilizer control.

- The transceiver function for the smart key system receives the signals from the oscillators and returns the ID code to the tuner.
- The transmitter function for the wireless door lock remote control has a LOCK button, UNLOCK button, LUGGAGE OPEN button, PANIC button.
- The transponder chip for the engine immobilizer control returns to the engine switch the radio wave response it received from the engine switch.

- This mechanical key works for the driver door, luggage compartment storage extension and glove box, but cannot start the engine.

A total of four keys can be registered. For details, See page DL-150.

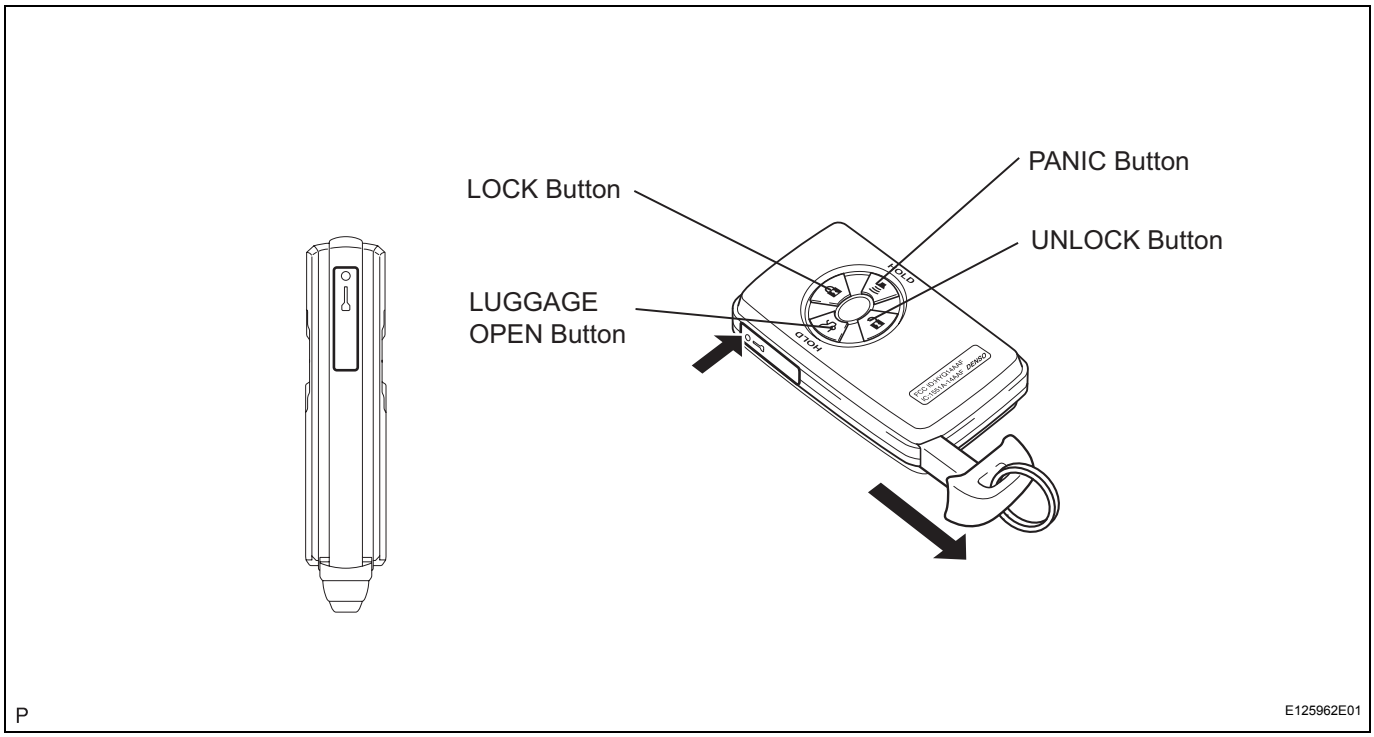

(b) Oscillator (Each Door, Front and Rear Cabins, Luggage compartment Inner, luggage compartment Outer)

Each oscillator transmits the request signal received from the certification ECU, and forms a key actuation area to detect the presence of a key.

The actuation area formed by each door oscillator and luggage compartment outer oscillator is approximately 0.7 to 1.0 m (2.3 to 3.3 ft.) from the outside handle of each door, or the center of the rear bumper.

- The actuation area of each door oscillator is formed by transmitting a request signal every 0.25 seconds while the engine switch is off and each door is locked. In this way it detects the proximity of a key. During entry lock, the actuation area is formed with the lock switch on.
- The actuation area of the luggage compartment outer oscillator is formed when the luggage compartment open switch is on. It is formed twice until the key can be verified.
- The actuation area of the front and rear cabin oscillator is formed when the driver door is opened or closed, during start ignition, when a warning is activated, or when the lock switch is on.

- The actuation area of the luggage compartment inner oscillator forms when the luggage compartment lid is closed or the luggage compartment open switch is pressed, and is formed twice until the key can be verified.

5. ENTRY FUNCTION OPERATION

(a) The smart key system has the following functions.

Function	Outline
Mechanical Key	The operation is same as mechanical key.
Wireless Door Remote Control	This function is a convenient system for locking and unlocking all the doors or luggage compartment at a distance. The operation is same as wireless door lock remote control system. However, the receiver in the certification ECU uses a tuner to perform control.
Entry Illumination	When a key enters any actuation area of the door oscillator, the foot light, the front interior light, and engine switch illumination illuminate.
Entry Unlock	When a key is located in any actuation area of the door oscillator, the door will unlock with the touch of an outside door handle.
Entry Unlock Mode Switching (See page DL-156)	Switches the doors that can be unlocked with the entry unlock function in two modes. • Driver Door Mode • All Door Mode
Entry Lock	When a key is located in any actuation area of the door oscillator and the power source is OFF, the door will be locked by merely pressing the lock switch on the outside door handle.
Entry Luggage compartment Open	When a key is in an actuation area of the luggage compartment outer oscillator, the luggage compartment opens by merely pressing the luggage compartment open switch.
Memory Call	This function operates the memory system in accordance with key ID.
Prevention of Key Confinement (*1)	• Prevents the confinement of the key if the door is locked from the outside door handle while the key is still inside the vehicle. • If the luggage compartment lid is closed while the key is still in the luggage compartment, the warning buzzer sounds, If the luggage compartment open switch is operated in two seconds during this period, the luggage compartment lid can be opened.
Warning	When any of the situations below occur, the smart key system causes certification ECU to sound the buzzer in the combination meter and wireless door lock buzzer, and illuminate the key warning light in order to the alert the driver. • An exit warning if the shift lever is in a position other than "P" and the power source is a mode other than "OFF". • An exit warning if the shift lever is in "P" and the power source is a mode other than "OFF". • A warning if the occupant leaves with the key. • A warning if the engine switch is operated while the key is outside the actuation area. • A warning if the entry lock is operated while the key is inside the vehicle. • A warning if the key battery is weak.
Battery Saving	If the key is constantly located within any actuation area of the door oscillator, the system maintains periodic communication with key. Therefore, if the vehicle remains parked in that state for a long time, the key battery and the vehicle battery could be drained.
Key Cancel (See page DL-156)	The following key functions can be cancelled by following certain operations. • Entry Unlock / Lock • Entry Unlock Mode Switching • Entry Luggage compartment Open • Prevention of Key Confinement • Warning
Push Button Start	When a key is located in any actuation area of the cabin oscillator, the power source mode can be switched by operating the engine switch.

*1: "Prevention of key confinement" function activates only when all the doors are locked.

DL

6. **Wireless door lock and unlock and luggage compartment open function**
   Push the LOCK / UNLOCK / PANIC / LUGGAGE COMPARTMENT button on the key to operate each function.
7. **Entry unlock function**
   (a) The action area is formed by regular communication between the door oscillator and tuner when the door is locked in order to detect access of the person carrying the key.
   (b) When the person carrying the key enters the action area around the vehicle, the matching of the ID codes for the door oscillator and key will automatically be performed. After the matching is completed, the door will enter unlock standby mode.
   (c) In unlock standby mode, the antenna built into the outside handle starts. If the outside handle is held (the back side of the handle is touched), the door unlock operation will be performed. (If the ID codes do not match, the door unlock operation for that door can not be done by holding the outside handle.) At this time, the hazard warning light blinks twice and the wireless door lock buzzer sounds twice.
   (d) If any of the doors is not opened after door unlock operation, all doors will automatically lock after 30 seconds.
8. **Entry lock function**
   (a) After leaving the vehicle carrying the key, push the lock switch on the outside handle when all the doors are closed.
   (b) The certification ECU determines whether the key is located inside or outside of the cabin based on the information of the door oscillator and cabin oscillator. The matching of the ID codes is performed.
   (c) When the matching result shows that the ID codes of the key and cabin oscillator do not match and those of the key and door oscillator match, the door lock function will operate. As this time, the hazard warning light blinks once and the wireless door lock buzzer sounds once.
   (d) If the key is located inside of the cabin, the door lock function will not operate and the alarm buzzer (peep sound) will sound for 2 seconds.

9. Push button start function

(a) When all the power sources of the vehicle are off, get in the vehicle carrying the key. Push the engine switch with the brake pedal released to perform matching of the ID codes inside of the cabin. If the codes match, the engine switch will light up in amber. The engine switch will change between ACC, IG, and OFF every time the engine switch is pushed. If the engine switch is pushed when the engine switch is ON (IG) with the shift lever in a position other than P and N, the engine switch will change to ON (ACC), not to OFF.

(b) When all the power source of the vehicle are off, get in the vehicle carrying the key. When the brake pedal is depressed with the shift lever in the P or N position, the matching of the ID codes will be performed inside the cabin. If the ID codes match, the indicator of the engine switch will light up in green. While the indicator lights up in green, push the engine switch to start the engine.

10. Push button start function (Key battery is dead)

(a) Get in the vehicle carrying the key (Use the mechanical key built into the key to unlock the door). Depress the brake pedal and hold the ornament face of the key to the engine switch so that the distance between them is 10 mm or less.

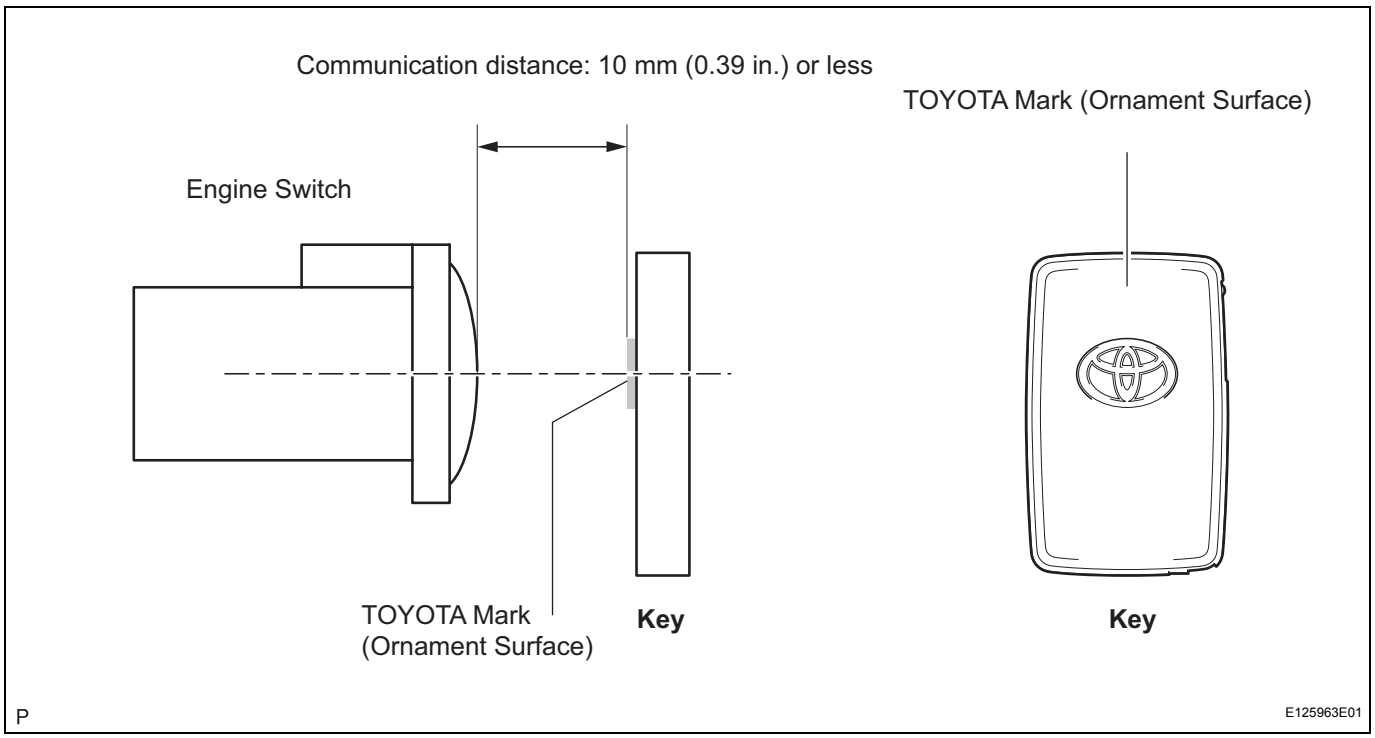

Release the brake pedal and push the engine switch within 5 seconds after a pip buzzer sounds. The engine switch will light up in amber. The engine switch will change between ACC, IG, and OFF every time the engine switch is pushed If the engine switch is pushed when the engine switch is ON (IG) with the shift lever in a position other than P and N, the engine switch will change to ON (ACC), not OFF.

(b) Get in the vehicle carrying the key (Use the mechanical key built into the key to unlock the door). Depress the brake pedal with the shift lever in the P or N position and hold the ornament face of the key to the engine switch so that the distance between them is 10 mm or less.
The indicator of the engine switch lights up in green after a pip buzzer sounds. Push the engine switch with the brake pedal depressed within 5 seconds of the buzzer sound.

11. Engine stop - Steering lock function / Engine immobilizer set function

If the engine switch is pushed after the vehicle stops, the engine and all the power sources will turn off. If the engine switch is pushed when the vehicle stops with the shift lever in a position other than P and N, the engine switch will change to ON (ACC), not to OFF.
If the driver's door is opened with the shift lever in the P position, steering lock will operate.

12. Entry luggage compartment open function

Stand in front of the luggage compartment with the key and push the luggage compartment open switch to start the matching of the ID codes for the luggage compartment oscillator (outer). If the ID codes match, luggage compartment open operation will be performed.

13. Prevention of key confinement function

(a) If you attempt to lock the door through keyless operation (move the lock knob to the lock position and then close the door) with the key in the cabin, the system determines that the key is located in the cabin and unlocks the door.

(b) If the luggage compartment is closed with the key in it, the alarm will sound and the luggage compartment can be opened only when all the doors are locked in order to prevent key confinement in the vehicle.
HINT:
"Prevention of key confinement" function activates only when all the doors are locked.

14. Entry illumination function

(a) When a person carrying the key enters the action area, the door will enter unlock standby mode and the front dome light and door mirror foot light will light up.
HINT:
The smart illumination function operates when the key enters the detection area from out of the detection area outside of the cabin (for 3 seconds or more). If the key remains in the detection area, the illumination function does not operate.

15. Memory call function

When the driver's door is opened or the engine switch is turned ON (ACC, IG), the seat position, etc. will automatically be restored to the state that has been set for the key code.
For the procedures of key registration (See page DL-150) and cancellation (See page DL-156).

16. Warning Function

(a) General
When any of the situation below occurs, the smart key system causes certification ECU to sound the buzzer in the combination meter and the wireless door lock buzzer, and illuminate the key warning light in order to alert the driver.
(1) An exit warning if the shift lever is in a position other than "P" and the power source is a mode other than "OFF".
(2) An exit warning if the shift lever is in "P" and the power source is a mode other than "OFF".
(3) A warning if the occupant leaves with the key.
(4) A warning if the engine switch is operated while the key is outside the actuation area.
(5) A warning if the entry lock is operated while the key is inside the vehicle.
(6) A warning if the key battery is weak.

(b) Situation: A
There are two patterns for situation A.
Pattern 1. In situation a), the door is opened and the user tries to leave the vehicle.
Pattern 2. Then the user holds the key and tries to move away from the vehicle.
In these situations the following control is performed.

Pattern 1.

Possible Effects without Warning	Sudden vehicle start, Vehicle roll-away
Warning Condition	The certification ECU gives a warning when all the following conditions are satisfied. • Shift lever is except "P". • Power source mode is except "OFF". • Driver door is opened. • Vehicle speed is 0.

Combination Meter	Buzzer	Warning: Continuous sound The warning is stopped when one of the following conditions are met. • Power source mode is "OFF". • Shift lever is "P". • Vehicle speed is above 0.
	Key Warning Light	-
Wireless Door Lock Buzzer		-

Pattern 2.

Possible Effects without Warning		Sudden vehicle start, Vehicle theft, Vehicle roll-away
Warning Condition		The certification ECU gives a warning when all the following conditions are satisfied. • Shift lever is except "P". • Power source mode is except "OFF". • Driver door changed from open to close. • Vehicle speed is 0. • Key is not in the vehicle.
Combination Meter	Buzzer	Warning: Continuous sound The warning is stopped when one of the following conditions is met. • Power source mode is "OFF" • Shift lever is "P". • Vehicle speed is above 0.
	Key Warning Light	Warning: Turn ON The warning is stopped when one of the following conditions is met. • Power source mode is "OFF". • Key is in the vehicle.
Wireless Door Lock Buzzer		Warning: Continuous sound The warning is stopped when one of the following conditions is met. • Power source mode is "OFF". • Shift lever is "P". • key is in the vehicle. • Vehicle speed is above 0.

(c) Situation: B

There are three patterns for situation B.

Pattern 1. In situation b), the door is opened and the user tries to leave the vehicle.

Pattern 2. Then the user holds the key and tries to move away from the vehicle.

Pattern 3. Then the user tires to use the entry lock and presses the lock switch.

In these situations the following control is performed.

Pattern 1.

Possible Effects without Warning		Vehicle theft
Warning Condition		The certification ECU gives a warning when all the following conditions are satisfied. • Shift lever is "P". • Power source mode is except "OFF". • Driver door is opened.
Combination Meter	Buzzer	Warning: Discontinuous sound The warning is stopped when one of the following conditions is met. • Power source mode is "OFF". • Shift lever is except "P". • Driver door is closed.
	Key Warning Light	-
Wireless Door Lock Buzzer		-

Pattern 2.

Possible Effects without Warning	Vehicle theft, Engine cannot be restarted

Warning Condition		The certification ECU gives a warning when all the following conditions are satisfied. • Shift lever is "P". • Power source mode is not "OFF". • Driver door changed from open to closed. • key is not in the vehicle.
Combination Meter	Buzzer	Warning: Sound once
	Key Warning Light	Warning: Turn ON The warning is stopped when one of the following conditions is met. • Power source mode is "OFF". • Key is in the vehicle.
Wireless Door Lock Buzzer		Warning: Sound 3 times The warning is stopped when one of the following conditions is met. • Power source mode is "OFF". • Vehicle speed is above 0.

Pattern 3.

Possible Effects without Warning		Vehicle theft
Warning Condition		The certification ECU gives a warning when all the following conditions are satisfied. • Shift lever is "P". • Power source mode is not "OFF". • All doors are closed. • Lock switch is "ON". • Key is outside the vehicle.
Combination Meter	Buzzer	-
	Key Warning Light	-
Wireless Door Lock Buzzer		Warning: Sounds for 2 seconds

(d) Situation: C
In this situation the following control is performed.

Possible Effects without Warning		Engine cannot be restarted
Warning Condition		The certification ECU gives a warning when all the following conditions are satisfied. • Power source mode is not "OFF". • Any door but the driver's changed from open to close. • Vehicle speed is 0. • Key is not in the vehicle.
Combination Meter	Buzzer	Warning: Sound once
	Key Warning Light	Warning: Turn ON The warning is stopped when one of the following conditions is met. • Power source mode is "OFF". • Vehicle speed is above 0.
Wireless Door Lock Buzzer		Warning: Sound 3 times The warning is stopped when one of the following conditions is met. • Power source mode is "OFF". • Vehicle speed is above 0.

(e) Situation: D
In this situation the following control is performed.

Possible Effects without Warning		Confuses the user
Warning Condition		The certification ECU gives a warning when all the following conditions are satisfied. • Engine switch is pushed. • Key is not in the vehicle.
Combination Meter	Buzzer	Warning: Sound once
	Key Warning Light	Warning: Turns ON for 5 seconds
Wireless Door Lock Buzzer		-

(f) Situation: E
In this situation the following control is performed.

Possible Effects without Warning	Vehicle theft

Warning Condition		The certification ECU gives a warning when all the following conditions are satisfied. • Power source mode is "OFF". • All doors are closed. • Lock switch is "ON". • Key is in the vehicle.
Combination Meter	Buzzer	-
	Key Warning Light	-
Wireless Door Lock Buzzer		Warning: Sounds for 2 seconds

(g) Situation: F
In this situation the following control is performed.

Possible Effects without Warning		Smart key system does not function
Warning Condition		The certification ECU gives a warning when all the following conditions are satisfied. • Power source mode switches to OFF after being left in IG-ON for over 20 minutes. • Key battery voltage is low.
Combination Meter	Buzzer	Warning: Sound once
	Key Warning Light	-
Wireless Door Lock Buzzer		-

DL

17. Battery Saving

(a) Vehicle Battery Saving Function
In the smart key system, signals are emitted outside of the vehicle at a prescribed interval (300 ms) when the doors are locked. Therefore, the vehicle battery could be drained if the vehicle remains parked for a long time. For this reason, the controls listed below are effected.

Condition	Control
No response from key for more than 5 days	Signal transmission interval is extended from 250 ms to 750 ms.
No response from key for more than 14 days	Automatically deactivates the smart key system.

Reinstatement Conditions
- A wireless door lock remote control signal (lock, unlock, or luggage compartment lid open) is input and the ID matches.
- A user carries the key and pushes a lock switch signal for the outside door handle.
- A door is locked or unlocked by the mechanical key.

(b) Key Battery and Vehicle Battery Saving Function
In the smart key system, if the key is constantly located within the vehicle exterior actuation area of the doors, the system maintains periodic communication with the key. Therefore, if the vehicle remains parked in that state for a long time, the key battery and the vehicle battery could be drained. For this reason, if this state continues longer than 10 minutes, the smart key system automatically becomes deactivated.

Reinstatement Conditions
- A wireless door lock remote control signal (lock, unlock, or luggage compartment lid open) is input and the ID matches.
- A user carries the key and pushes a lock switch signal for the outside handle.

- A door is locked or unlocked by the mechanical key.

HOW TO PROCEED WITH TROUBLESHOOTING

HINT:

- Use this procedure to troubleshoot the smart key system.
- The intelligent tester can be used in steps 3, 4, 5 and 7.
- When troubleshooting the smart key system using the intelligent tester with the engine switch off, connect the intelligent tester to the vehicle and repeat turning any of the courtesy light switches on and off until communication between the tester and the vehicle begins (the interval ON and OFF should be less than 1.5 sec.).

1	VEHICLE BROUGHT TO WORKSHOP

DL

NEXT

2	CUSTOMER PROBLEM ANALYSIS

(a) Confirm problem symptoms.

NEXT

3	CHECK MULTIPLEX COMMUNICATION SYSTEM

(a) Check for DTCs (See page MP-23).
HINT:
This system uses multiplex communication. Check for DTCs for the multiplex communication system before performing the troubleshooting.

Result

Result	Proceed to
DTC is not output.	A
DTC is output.	B

B → GO TO MULTIPLEX COMMUNICATION SYSTEM

A

4	CHECK DTC

(a) Check for DTCs (See page DL-170).
(1) Record the DTCs.
(b) Clear the DTCs.
HINT:
After DTCs are all cleared, check if the trouble occurs again 6 seconds after the engine switch is turned on (IG).
(c) Recheck for DTCs.

(1) Simulate the malfunction and check if the DTCs are output again.

Result

Result	Proceed to
DTC is output.	A
DTC is not output.	B
DTCs are not output, and the malfunction cannot be simulated or checked.	C

B → Go to step 10

C → SYMPTOM SIMULATION

A

5 DTC CHART

NEXT

6 CIRCUIT INSPECTION

NEXT

7 OVERALL ANALYSIS AND TROUBLESHOOTING

(a) DATA LIST / ACTIVE TEST (See page DL-171)
  (1) Inspection with the intelligent tester (DATA LIST / ACTIVE TEST)
(b) Terminal of ECU (See page DL-164)
(c) On-vehicle inspection (See page DL-178)

NEXT

8 ADJUST, REPAIR OR REPLACE

NEXT

9 CONFIRMATION TEST

NEXT

END

DL

10	PROBLEM SYMPTOMS TABLE

NEXT

11	ADJUST, REPAIR OR REPLACE

NEXT

12	CONFIRMATION TEST

NEXT

DL

END

REGISTRATION

1. DESCRIPTION OF CODE REGISTRATION

HINT:

- ID codes are the same as recognition codes for the wireless transmitter and the engine immobiliser function. Registering an ID code enables the smart key system, the wireless door lock control function and the engine immobiliser function to be operated.
- Code registration is needed when the certification ECU, ID code box, steering lock ECU or key is replaced with a new one.

(a) PROCEDURE "1"

The vehicle with the smart key system does not have a key slot. Therefore, hold the key close to the engine switch to register the key, as shown in the illustration below.

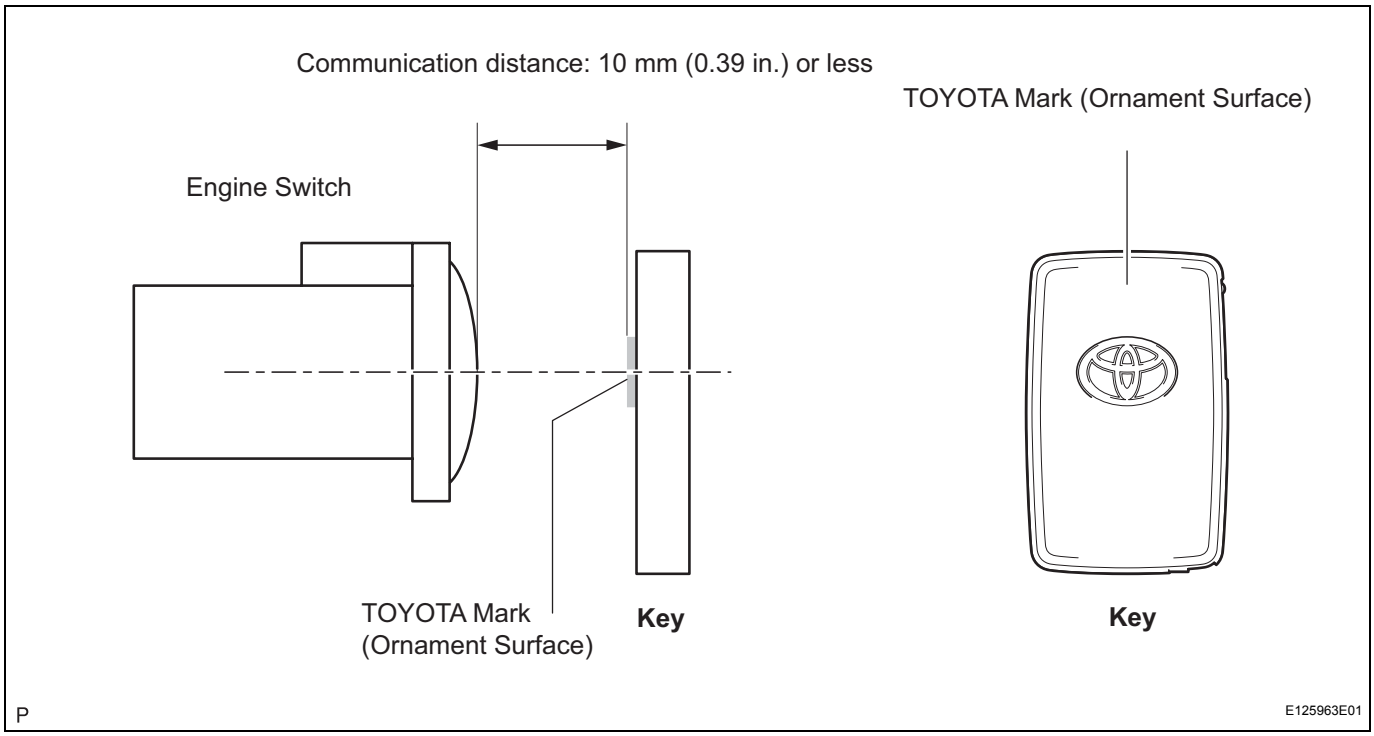

2. PART REPLACEMENT AND KEY REGISTRATION PROCEDURES

(a) The following table shows ECU replacement and key registration procedures in case the malfunctioning ECU has been specified after troubleshooting the smart key system.

HINT:

- The following procedures indicated in the table below require the use of the intelligent tester:
  - New key ID registration
  - Additional key ID registration
  - Key ID erasure
  - ECU code registration
- If all of the registered keys are not available, replacement of the ID code box is also required.

- A maximum of 7 keys can be registered.

Part to be replaced	Condition		Procedure	Reference
Certification ECU	Customer has brought all keys		1. Replace certification ECU	-
			2. Reregister all keys (new key ID registration)	PROCEDURE "B"
	Some keys are lost	Key ID codes can be registered and erased	1. Erase key codes (key ID erasure)	PROCEDURE "D"
			2. Perform additional key registration procedure (additional key ID registration)	PROCEDURE "C"
			3. Replace certification ECU	-
			4. Reregister all keys (new key ID registration) HINT: If some keys are not registered during above steps, they will be disabled because they cannot be registered later	PROCEDURE "B"
		Key ID codes cannot be either registered or erased	1. Replace certification ECU	-
			2. Replace ID code box	-
			3. Reregister all keys (new key ID registration) HINT: If key codes cannot be erased or additional keys cannot be registered due to a malfunction in certification ECU, replace ID code box and certification ECU. If some keys are not registered during above steps, they will be disabled because they cannot be registered later	PROCEDURE "A"
			4. ECU communication ID registration	PROCEDURE "F"
ID code box	At least 1 key is available		1. Replace ID code box	-
			2. Register recognition codes in ECUs (ECU code registration)	PROCEDURE "E"
			3. ECU communication ID registration	PROCEDURE "F"
	All keys are lost		1. Replace ID code box	-
			2. Replace certification ECU	-
			3. Reregister all keys (new key ID registration) HINT: If some keys are not registered during above steps, they will be disabled because they cannot be registered later	PROCEDURE "A"
			4. ECU communication ID registration	PROCEDURE "F"
Steering lock ECU	Customer has brought at least 1 key		1. Replace steering lock ECU	-
			2. Register recognition codes in ECUs (ECU code registration)	PROCEDURE "E"
	All keys are lost		1. Replace steering lock ECU	-
			2. Replace certification ECU	-
			3. Replace ID code box	-
			4. Reregister all keys (new key ID registration) HINT: If some keys are not registered during above steps, they will be disabled because they cannot be registered later	PROCEDURE "A"
			5. ECU communication ID registration	PROCEDURE "F"
Power Source Control ECU	No condition required		Replace power source control ECU	-
ECM	No condition required		1. Replace ECM	-
			2. ECU communication ID registration	PROCEDURE "F"

DL

Part to be replaced	Condition	Procedure	Reference
Key	Customer has brought at least 1 key	1. Using remaining key, erase lost key (key ID erasure)	PROCEDURE "D"
		2. Register additional keys as necessary (additional key ID registration)	PROCEDURE "E"
	All keys are lost	1. Replace certification ECU	-
		2. Replace ID code box	-
		3. Register all keys (new key ID registration) HINT: If customer brings lost keys at later date, they can be registered using additional key ID registration function	PROCEDURE "A"
		4. ECU communication ID registration	PROCEDURE "F"

3. KEY REGISTRATION PROCEDURES

(a) PROCEDURE "A"

New key ID registration (when replacing certification ECU and ID code box, or certification ECU, ID code box and steering lock ECU)

DL

Process	Procedure
1. Start of registration	1. Connect intelligent tester (with CAN VIM) to DLC3 2. Turn engine switch on (IG) 3. Select "SMART ACCESS / ID UTILITY / SMART CODE REG" from tester menu HINT: The engine switch cannot be turned on (IG) more than 10 times. After connecting tester, turn tester on while turning driver side door courtesy light switch on and off repeatedly at 1.5 second intervals or less to continue key registration procedure
2. Confirmation of ECU code	Perform operation according to prompts on tester screen HINT: The mode is automatically selected by tester, new registration mode or add more
3. Verification of unregistered key *1	Hold unregistered key close to engine switch (For details, refer to PROCEDURE "1")
	Confirm that wireless door lock buzzer sounds. Place unregistered key on front passenger side seat
	Confirm that wireless door lock buzzer sounds
4. Registration of ID code	Perform operation according to prompts on tester screen
5. End of registration	Finish new key ID code registration

*1: Repeat this process for each key which is to be registered for the vehicle. Finish the procedure for each key within 30 seconds. If the procedure for any of the keys has not been finished within the specified time, perform registration procedures from process 1 again. Make sure that only 1 key is in the cabin during registration procedures. If 2 or more keys are in the cabin simultaneously, electric waves will interfere with each other, preventing normal registration.

(b) PROCEDURE "B"
New key ID registration (when replacing certification ECU)

Process	Procedure
1. Start of registration	1. Connect intelligent tester (with CAN VIM) to DLC3 2. Turn engine switch on (IG) 3. Select "SMART ACCESS / ID UTILITY / SMART CODE REG" from tester menu HINT: The engine switch cannot be turned on (IG) more than 10 times. After connecting tester, turn tester on while turning driver side door courtesy light switch on and off repeatedly at 1.5 second intervals or less to continue key registration procedure
2. Confirmation of ECU code	Perform operation according to prompts on tester screen HINT: The mode is automatically selected by tester, new registration mode or add mode
3. Confirmation of all registered keys *1	Hold unregistered key close to engine switch (For details, refer to PROCEDURE "1")
	Confirm that wireless door lock buzzer sounds
4. Confirmation of ECU code	Perform operation according to prompts on tester screen
5. Verification of unregistered key *2	Hold unregistered key close to engine switch (For details, refer to PROCEDURE "1")
	Confirm that wireless door lock buzzer sounds. Place unregistered key on front passenger side seat
	Confirm that wireless door lock buzzer sounds
5. Registration of ID code	Perform operation according to prompts on tester screen
6. End of registration	Finish new key ID code registration

*1: Repeat this process for each key registered for the vehicle. Finish the procedure for each key within 30 seconds. If the procedure for any of the keys has not been finished within the specified time, perform registration procedures from process 1 again. If performing the key confirmation procedure for a key, the security indicator comes on and remains on until all the keys are confirmed.
*2: Repeat this process for each key which is to be registered for the vehicle. Finish the procedure for each key within 30 seconds. If the procedure for any of the keys has not been finished within the specified time, perform registration procedures from 1 again. Make sure that only 1 key is in the cabin during registration procedures. If 2 or more keys are in the cabin simultaneously, electric waves will interfere with each other, preventing normal registration.

(c) PROCEDURE "C"
Additional key ID registration

Process	Procedure
1. Start of registration	1. Connect intelligent tester (with CAN VIM) to DLC3 2. Turn engine switch on (IG) 3. Select "SMART ACCESS / ID UTILITY / SMART CODE REG" from tester menu

Process	Procedure
2. Confirmation of registered key *1	Perform operation according to prompts on intelligent tester screen HINT: The mode is automatically selected by tester, new registration mode or add mode
	Hold unregistered key close to engine switch (For details, refer to PROCEDURE "1")
	Confirm that wireless door lock buzzer sounds once
3. Confirmation of ECU code	Perform operation according to prompts on tester screen
4. Verification of unregistered key *2	Hold unregistered key close to engine switch (For details, refer to PROCEDURE "1")
	Confirm that wireless door lock buzzer sounds. Place unregistered key on front passenger side seat
	Confirm that wireless door lock buzzer sounds
5. Registration of ID code	Perform operation according to prompts on tester screen
6. End of registration	Finish key ID code registration

*1: Perform this process for one of the keys registered for the vehicle. Finish the procedure within 30 seconds. If the procedure has not been finished within the specified time, perform registration procedures from process 1 again.
*2: Repeat this process for each key which is to be registered for the vehicle. Finish the procedure for each key within 30 seconds. If the procedure for any of the keys has not been finished within the specified time, perform registration procedures from 1 again. Make sure that only 1 key is in the cabin during registration procedures. If 2 or more keys are in the cabin simultaneously, electric waves will interfere with each other, preventing normal registration.

(d) PROCEDURE "D"
Key ID erasure
HINT:
Erase all registered key codes except one.

Process	Procedure
1. Start of erasure	1. Connect intelligent tester (with CAN VIM) to DLC3 2. Turn engine switch on (IG) 3. Select "SMART ACCESS / ID UTILITY / SMART CODE ERS" from tester menu
2. Confirmation of registered key *1	Perform operation according to prompts on intelligent tester screen
	Hold unregistered key close to engine switch (For details, refer to PROCEDURE "1")
	Confirm that wireless door lock buzzer sounds once
3. Confirmation of ECU code	Perform operation according to prompts on tester screen
4. Erasure of ID code	Perform operation according to prompts on tester screen
5. End of erasure	Finish key ID code erasure

*1: Perform this process for one of the keys registered for the vehicle. Finish the procedure within 30 seconds. If the procedure has not been finished within the specified time, perform erasure procedures from process 1 again.

(e) PROCEDURE "E"
ECU code registration

Process	Procedure
1. Start of registration	1. Connect intelligent tester (with CAN VIM) to DLC3 2. Turn engine switch on (IG) 3. Select "SMART ACCESS / ID UTILITY / ECU COMM ID REG / ID Code Box and Steering Lock" from tester menu
2. Confirmation of registered key *1	Hold unregistered key close to engine switch (For details, refer to PROCEDURE "1")
	Confirm that wireless door lock buzzer sounds once
3. Erasure of ECU code	Perform operation according to prompts on tester screen
4. End of registration	Finish ECU code registration

*1: Perform this process for one of the keys registered for the vehicle. Finish the procedure within 30 seconds. If the procedure has not been finished within the specified time, perform erasure procedures from process 1 again.

DL

(f) PROCEDURE "F"
ECU communication ID registration
NOTICE:
- **The ECU COMMUNICATION ID should be registered when the ID code box and/or the ECM is replaced in order to match these ECM COMMUNICATION ID.**
- **The engine cannot be started unless the ECM COMMUNICATION ID matches.**

Register the ECU communication ID.

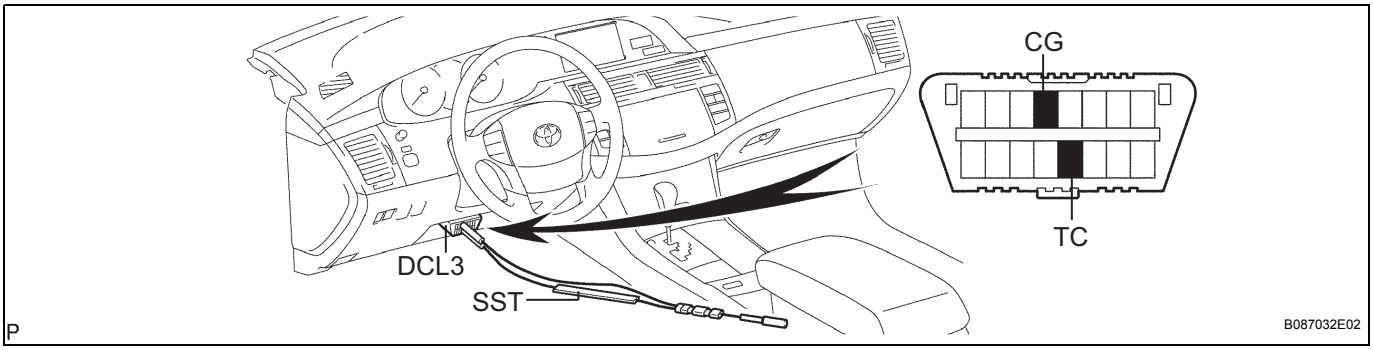

(1) Using SST, connect terminals TC and CG of the DLC3.
SST 09843-18040
(2) Turn the engine switch on (IG) and leave it for 30 minutes.
HINT:
Do not start the engine.
(3) Turn the engine switch off and disconnect terminals TC and CG.
(4) Check that the engine starts.

CUSTOMIZE PARAMETERS

HINT:
The following items can be customized.

NOTICE:

- **When the customer requests a change in a function, first make sure that customization of the function(s) is possible.**
- **Be sure to record the current settings before customizing.**
- **When troubleshooting a function, first make sure that the function is not set to OFF.**

1. Using intelligent tester

WIRELESS DOOR LOCK

Display (Item)	Default	Contents	Setting
OPEN DOOR WARN (Open door warning)	ON	Function to make the buzzer sound for 10 seconds if the door is open when locking with the wireless door lock function.	ON / OFF
WIRELESS OPER (Wireless door lock control function)	ON	ON / OFF of the wireless door lock function.	ON / OFF
ALARM FUNCTION (*1) (Panic function)	ON	Function to operate the theft deterrent system by keeping pressing the lock button of the transmitter for 2.5 seconds. If there is a panic button, press the panic button instead of the lock button.	ON / OFF
UNLOCK/2 OPER (2 times operation wireless unlock)	ON	Function to unlock the driver's door by pressing the unlock button of the transmitter once and to unlock all the doors by pressing it twice. In the OFF setting, pressing one time makes all the doors unlocked.	ON / OFF
LUGGAGE COMPARTMENT LID OPER (Trunk lid open function type)	0.8 s PR	To change the operation method of opening the luggage compartment by the transmitter.	1 TIME / 2 TIMES / 0.8 s PR / OFF
AUTO LOCK DELAY (Auto lock time)	30 s	To change the time until re-locking after unlocking with the wireless door lock function.	60 s / 30 s
HAZARD AND BACK (Hazard answer back of the wireless)	ON	Function to light up the all turn signal lights once when pressing the transmitter lock button and twice when pressing the unlock button.	ON / OFF
WIRLS BUZZ RESP (Wireless buzzer response)	ON	ON / OFF of the wireless buzzer response function.	ON / OFF

*1: w/ Theft deterrent system

WARNING (COMBINATION METER)

Display (Item)	Default	Contents	Setting
SMART WARN3 (Warn a key is taken out by fellow passengers)	ON	Function to warn that a key is taken out by fellow passengers (it means the key is taken out from except the driver's door) when ignition is not OFF.	ON / OFF
KEY LOW-BATT WRN (Warn when the key battery becomes weak)	ON	Setting a warning function for the first time when a key battery becomes weak.	ON / OFF
KEY REMND VOLUM (Key reminder buzzer volume)	LARGE	To change the volume of the key reminder buzzer.	LARGE / MEDIUM / SMALL
KEY REMND SOUND (Key reminder buzzer sound)	NORMAL	To change the frequency of the key reminder buzzer.	NORMAL / FAST / SLOW / 0 s

SMART

Display (Item)	Default	Contents	Setting
SMART IGNITION (SMART ignition available area)	ALL	Function to choose the available area for smart key to start E/G and cancel the Steering Lock.	FRONT / ALL

Display (Item)	Default	Contents	Setting
PARK WAIT TIME (Wait time to permit opening door after locking)	2.5 s	Setting a wait time to permit opening a door after it being locked with SMART entry.	0.5 s / 1.5 s / 2.5 s / 5 s
SMART TRUNK (Luggage compartment opening operation when vehicle is locked)	ON	Function to open a luggage compartment when the driver has the key and press the luggage open button.	ON / OFF
KEY LOW-BATT WRN	ON	Function to set a warning function for the time when a key battery becomes weak.	ON / OFF

2. Entry Unlock Mode Switching

(a) Check that the power source mode is OFF and the LED on the key does not blink. Press all buttons other than LOCK and UNLOCK on the key at the same time for approximately 5 seconds while the key is in the actuation area.

(b) Certification ECU receives this signal from the tuner and switches the entry unlock mode.

(c) The certification ECU sounds the buzzer of the wireless door lock buzzer and combination meter to inform the user that the mode has been switched.

Mode	Wireless Door Lock Buzzer	Buzzer in Combination Meter
Driver Door (Default)	 Sounds 3 times	Sounds once
All Doors (Customized)	 Sounds 2 times	Sounds once

N

E126056E03

HINT:

- The function only switches the entry unlock of the smart key system. It does not switch the unlocking of the wireless door lock remote control.
- The entry unlock mode cannot be changed for 5 seconds after the previous change.

3. Key Cancel

Key cancel is operated when certain operations are performed with the vehicle in the following conditions.

- A function that allows you to lock / unlock the doors and open the luggage compartment by simply carrying a key.
- A function that causes the vehicle to beep if keys are left inside the vehicle or luggage compartment and a door is closed.
- A function that recalls the position of the driver's seat and side rear view mirrors.

(a) The operation procedures are as follows:
(1) Unlock twice with the UNLOCK button of the key.
(2) Open the driver's door within 5 seconds, from 1) operation.
(3) Unlock twice with the UNLOCK button of the key within 5 seconds from 2) operation.
(4) Repeat open → close twice for the driver door within 30 seconds, from 3) operation and open again.
(Driver Door: Open → Close → Open → Close → Open)
(5) Unlock twice with the UNLOCK button of the key within 5 seconds, from 3) operation.
(6) Repeat open → close once for the driver door within 30 seconds, from 3) operation and open again.
(Driver Door: Open → Close → Open)
(7) Close the driver door within 5 seconds, from 6) operation.
When key cancel is activated, the wireless door lock buzzer sounds twice.
To return to the original condition, perform the procedures again. When key cancel is returned, the wireless door lock buzzer sounds once.

PROBLEM SYMPTOMS TABLE

ENTRY LOCK / UNLOCK FUNCTION

Symptom	Suspected area	See page
Entry unlock does not operate.	1. Check for DTCs in the smart key system.	DL-177
	2. Power door lock control system	DL-8
	3. See "ID code matching inside the cabin cannot be performed" in this table.	-
	4. Courtesy light switch circuit (Front)	DL-101
	5. Courtesy light switch circuit (Rear)	DL-104
	6. Lock position switch circuit (Driver door)	DL-15
	7. Lock position switch circuit (Front passenger door)	DL-18
	8. Lock position switch circuit (Rear passenger door LH)	DL-21
	9. Lock position switch circuit (Rear passenger door RH)	DL-24
	10. Touch sensor circuit	DL-211
	11. Antenna circuit	DL-215
	12. Replace the door oscillator.	-
	13. Replace the body ECU.	-
	14. Replace the certification ECU.	-
Entry lock does not operate.	1. Check for DTCs in the smart key system.	DL-177
	2. Power door lock control system	DL-8
	3. See "ID code matching inside the cabin cannot be performed" in this table.	-
	4. Courtesy light switch circuit (Front)	DL-101
	5. Courtesy light switch circuit (Rear)	DL-104
	6. Lock position switch circuit (Driver door)	DL-15
	7. Lock position switch circuit (Front passenger door)	DL-18
	8. Lock position switch circuit (Rear passenger door LH)	DL-21
	9. Lock position switch circuit (Rear passenger door RH)	DL-24
	10. Trigger (Lock) switch circuit	DL-228
	11. Antenna circuit	DL-215
	12. Replace the body ECU.	-
	13. Replace the certification ECU.	-
Luggage compartment does not open (when the key is outside the vehicle).	1. Check for DTCs in the smart key system.	DL-177
	2. Power door lock control system	DL-8
	3. Check if any function is cancelled due to customization.	DL-156
	4. Operate the luggage compartment SW on the key to check the wireless function. (If it does not operate, see "Wireless door lock function" in this table.)	-
	5. Check operation of the cabin oscillator in diagnostic mode.	DL-171
	6. Luggage oscillator circuit	DL-217
	7. Luggage compartment open switch circuit	DL-222
	8. Replace the body ECU.	-
	9. Replace the certification ECU.	-

Symptom	Suspected area	See page
Function to prevent key confinement in the luggage compartment does not operate. (The luggage compartment does not open.)	1. Check for DTCs in the smart key system.	DL-177
	2. Power door lock control system	DL-8
	3. Courtesy light switch circuit (Front)	DL-101
	4. Courtesy light switch circuit (Rear)	DL-104
	5. Lock position switch circuit (Driver door)	DL-15
	6. Lock position switch circuit (Front passenger door)	DL-18
	7. Lock position switch circuit (Rear passenger door LH)	DL-21
	8. Lock position switch circuit (Rear passenger door RH)	DL-24
	9. Check if any function is not cancelled due to customization.	DL-156
	10. Operate the LOCK/UNLOCK SW on the key to check the wireless function. (If it does not operate, see "Wireless door lock function" in this table.)	-
	11. Check operation of the cabin oscillator in diagnostic mode.	DL-171
	12. Luggage oscillator circuit	DL-217
	13. Replace the body ECU.	-
	14. Replace the certification ECU.	-
Function to prevent key confinement in the luggage compartment does not operate. (The alarm does not sound.)	1. Check if the function to prevent key confinement in the luggage compartment operates.	-
	2. Check if answer back is performed when the wireless door lock is operated.	DL-86
	3. Replace the certification ECU.	-
The outside alarm of the answer back and entry systems does not sound.	1. Check if the function to prevent key confinement in the luggage compartment operates.	-
	2. Check that "WIRLS BUZZ RESP" and "HAZARD ANS BACK" in the DATA LIST of the body ECU is YES. (If it is NO, go to power door lock system.)	DL-11
	3. Wireless door lock tuner circuit (DTC B1242)	DL-89
	4. Replace the certification ECU.	-
The inside alarm of the entry system does not sound.	1. Operate the LOCK/UNLOCK SW on the key to check the wireless function. (If it does not operate, see "Wireless door lock function" in this table.)	-
	2. Check if the key reminder buzzer sounds.	-
	3. Replace the certification ECU.	-
ID code matching inside the cabin cannot be performed.	1. Check if any function is cancelled due to customization.	DL-156
	2. Operate the LOCK/UNLOCK SW on the key to check the wireless function. (If it does not operate, see "Wireless door lock function" in this table.)	-
	3. Check the cabin oscillator operation in the diagnostic mode.	DL-171
	4. Cabin oscillator circuit	DL-220
	5. Luggage oscillator circuit	DL-217
	6. System is normal.	-
ID code matching outside the cabin cannot be performed.	1. Check if any function is cancelled due to customization.	DL-156
	2. Operate the LOCK/UNLOCK SW on the key to check the wireless function. (If it does not operate, see "Wireless door lock function" in this table.)	-
	3. Check operation of each door oscillator in diagnostic mode.	DL-171
	4. Door oscillator circuit	DL-206
	5. System is normal.	-

WIRELESS DOOR LOCK FUNCTION

Symptom	Suspected area	See page
Wireless door lock function does not operate.	1. Key	DL-232
	2. Wireless door lock tuner circuit (DTC B1242)	DL-89
	3. Power door lock control system	DL-8
	4. Replace the certification ECU.	-
Luggage compartment is the only wireless door lock function that does not operate.	1. Key	DL-232
	2. Wireless door lock tuner circuit (DTC B1242)	DL-89
	3. Power door lock control system	DL-8
	4. Replace the certification ECU	-
No answer back (wireless door lock buzzer)	1. Wireless door lock buzzer circuit	DL-110
	2. Replace the certification ECU.	-
No answer back (hazard warning light)	1. Turn signal warning light circuit	DL-98
	2. Replace the certification ECU.	-

DL

STEERING LOCK FUNCTION

Symptom	Suspected area	See page
Steering wheel cannot be unlocked (the engine cannot be started).	1. Check for DTCs in the push button start.	ST-23
	2. Check for DTCs in the smart key system.	DL-177
	3. Check that the "LCK/UNLCK REC" item in the DATA LIST of the certification ECU displays YES within 10 seconds after starting the engine. (If it displays NO, see "No steering unlock command" in this table.)	-
	4. Check the output from the IGE terminal of the steering lock ECU (DTC B2782).	SR-17
	5. Steering lock ECU power source circuit	SR-29
	6. Replace the steering lock ECU.	-
Steering wheel cannot be unlocked (no steering unlock command).	1. Check that the "S CODE MACH" item in the DATA LIST of the certification ECU displays OK. (If it displays NG, replace the certification ECU or ID code box.)	DL-171
	2. Check that the "L CODE MACH" item in the DATA LIST of the steering lock ECU displays OK. (If it displays NG, replace the steering lock ECU or ID code box.)	DL-171
	3. Replace the certification ECU.	-
Steering wheel cannot be locked.	1. Check for DTCs in the push button start.	ST-23
	2. Check for DTCs in the smart key system.	DL-177
	3. With the engine switch OFF and the shift in the P position, open and close the drivers door. After that, check that the "LCK/UNLCK REC" item in the DATA LIST of the certification ECU displays YES within 10 seconds. (If it displays NO, see "No steering lock command" in this table.)	-
	4. Check the output from the IGE terminal of the steering lock ECU (DTC B2782).	SR-17
	5. Steering lock ECU power source circuit	SR-29
	6. Replace the steering lock ECU.	-
Steering wheel cannot be locked (no steering lock command).	1. Courtesy light switch circuit (Front)	DL-101
	2. Courtesy light switch circuit (Rear)	DL-104
	3. Check that the "S CODE MACH" item in the DATA LIST of the certification ECU displays OK. (If it displays NG, replace the certification ECU or ID code box.)	DL-171
	4. Check that the "L CODE MACH" item in the DATA LIST of the certification ECU displays OK. (If it displays NG, replace the steering lock ECU or ID code box.)	DL-171
	5. Replace the certification ECU.	-

KEY REMINDER WARNING FUNCTION

Symptom	Suspected area	See page
Key reminder buzzer does not sound.	1. Perform ACTIVE TEST for the combination meter.	ME-33
	2. Check "COURTESY SW" in the DATA LIST of the door lock control system.	DL-11
	3. Check the key reminder buzzer when the engine switch is ON (ACC) and the drivers door is opened.	-
	4. Check if the steering wheel is locked when all power supplies are OFF and the drivers door is opened. (If the steering wheel is not locked, see "Steering wheel cannot be locked" in the steering lock function table.)	-
	5. Check that the "LCK BAR STUCK" item in the DATA LIST of the certification ECU displays OK. (If it displays NG, replace the steering lock assembly.)	DL-171
	6. Replace the certification ECU.	-

PUSH BUTTON START FUNCTION

Symptom	Suspected area	See page
Engine does not start.	1. Check for DTCs in the push button start.	ST-23
	2. Check for DTCs in the smart key system.	DL-177
	3. Check that the engine switch is turned on.	-
	4. Check cranking operation. (If cranking operation is possible, see "Engine does not start due to the engine immobilizer" in this table.)	-
	5. Check "SHIFT P SIG" in the DATA LIST of the power source control ECU and confirm that the shift signal is normal.	DL-171
	6. Check whether the steering wheel is locked or unlocked. (If it is locked, see "Steering wheel cannot be unlocked" in the steering lock function table.)	-
	7. Check the output signal from the ST SW of the certification ECU (DTC B2275).	ST-38
	8. Replace the power source control ECU.	-
Engine does not start due to the engine immobilizer.	1. Check that the "L CODE MACH" item in the DATA LIST of the certification ECU displays OK. (If it displays NG, replace the steering lock ECU or ID code box.)	DL-171
	2. Check that the "ENG START REQ" item in the DATA LIST of the certification ECU displays YES. (If it displays NO, replace the certification ECU.)	DL-171
	3. Check that the "S CODE MACH" item in the DATA LIST of the certification ECU displays OK. (If it displays NG, replace the certification ECU or ID code box.)	DL-171
	4. Replace the ID code box.	-
Engine does not start due to the EFI system.	1. Terminals of ACCR and STAR are turned on when starting the engine (DTC B2276).	ST-41
	2. ST relay	ST-80
	3. Starter	ST-74
	4. Replace the ECM.	-

Symptom	Suspected area	See page
Power does not turn on (neither ACC nor IG is possible).	1. Check for DTCs in the push button start.	ST-23
	2. Place the key on the drivers seat, move the shift lever to the P position, and depress the brake pedal. Check that the engine switch indicator comes on in green. (If the indicator does not come on or comes on in amber, see "ID code matching inside the cabin cannot be performed" in this table.)	-
	3. Check the IG1 relay (DTC B2272).	ST-27
	4. Check the IG2 relay (DTC B2273).	ST-32
	5. Check the ACC relay (DTC B2274).	ST-35
	6. Check the input terminal of the engine switch (DTC B2278).	ST-45
	7. Ground circuit (Power source control ECU - body ground)	ST-17
	8. Replace the power source control ECU.	-
Power is not turned on (only ACC is not turned on).	1. Check for DTCs in the push button start.	ST-23
	2. Check the ACC relay (DTC B2274).	ST-35
	3. Replace the power source control ECU.	-
Power is not turned on (only IG is not turned on).	1. Check for DTCs in the push button start.	ST-23
	2. Check the IG1 relay (DTC B2272).	ST-27
	3. Check the IG2 relay (DTC B2273).	ST-32
	4. Replace the power source control ECU.	-

TERMINALS OF ECU

1. CHECK CERTIFICATION ECU

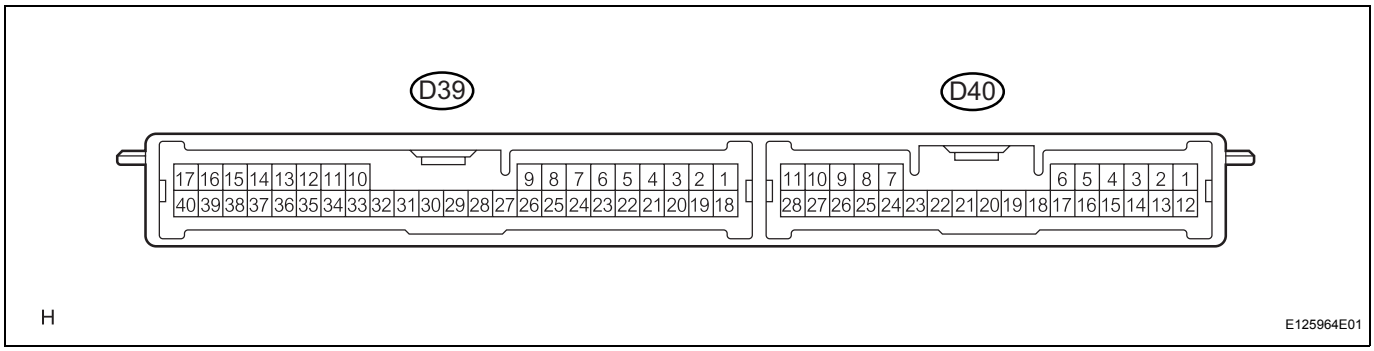

(a) Disconnect the D39 and D40 ECU connectors.
(b) Measure the resistance and voltage of each terminal of the wire harness side connector.

DL

Standard

Symbols (Terminals No.)	Wiring Color	Terminal Description	Condition	Specified Condition
+B1 (D39-1) - Body ground	R - Body ground	+B power supply	Always	10 to 14 V
TSW1 (D39-3) - Body ground	LG - Body ground	Trigger switch (Lock switch) signal	Front lock switch LH not pushed → Pushed	10 kΩ or higher → Below 1 Ω
TSW2 (D39-4) - Body ground	GR - Body ground	Trigger switch (Lock switch) signal	Front lock switch RH not pushed → Pushed	10 kΩ or higher → Below 1 Ω
TSW5 (D39-7) - Body ground	G - Body ground	Luggage compartment open switch signal	Luggage compartment open switch not pushed → Pushed	10 kΩ or higher → Below 1 Ω
LIN (D39-10) - Body ground	BR - Body ground	LIN line	Always	10 kΩ or higher
E (D39-17) - Body ground	W-B - Body ground	Ground	Always	Below 1 Ω
IG (D39-18) - Body ground	Y - Body ground	Ignition power supply	Engine switch OFF → ON (IG)	Below 1 V → 10 to 14 V
ACC (D39-19) - Body ground	SB - Body ground	ACC power supply	Engine switch OFF → ON (ACC)	Below 1 V → 10 to 14 V
TSW3 (D40-25) - Body ground	Y - Body ground	Trigger switch (Lock switch) signal	Rear lock switch LH not pushed → Pushed	10 kΩ or higher → Below 1 Ω
TSW4 (D39-26) - Body ground	GR - Body ground	Trigger switch (Lock switch) signal	Rear lock switch RH not pushed → Pushed	10 kΩ or higher → Below 1 Ω
MPX1 (D39-27) - Body ground	R - Body ground	MPX line	Always	10 kΩ or higher
MPX2 (D39-28) - Body ground	B - Body ground	MPX line	Always	10 kΩ or higher
AGND (D39-40) - Body ground	V - Body ground	Ground	Always	Below 1 Ω

If the result is not as specified, there may be a malfunction on the wire harness side.
(c) Reconnect the D39 and D40 ECU connectors.
(d) Measure the voltage and frequency of each terminal of the connector.

Standard

Symbols (Terminals No.)	Wiring Color	Terminal Description	Condition	Specified Condition
SEL1 (D39-5) - Body ground	P - Body ground	Outside handle antenna signal	Move the key more than 5 m (16.4 ft) away from the front door LH. → Bring it to the outside handle.	10 to 14 V → Below 1 V

Symbols (Terminals No.)	Wiring Color	Terminal Description	Condition	Specified Condition
SEL2 (D39-6) - Body ground	V - Body ground	Outside handle antenna signal	Move the key more than 5 m (16.4 ft) away from the front door RH. → Bring it to the outside handle.	10 to 14 V → Below 1 V
TXCT (D39-8) - Body ground	GR - Body ground	Transponder key amplifier output signal	Key is not in the cabin. → Have the key outside the cabin and open the driver's door.	Below 1 V → Pulse generation (see waveform 1)
CODE (D39-9) - Body ground	W - Body ground	Transponder key amplifier communication signal	Key is not in the cabin. → Have the key outside the cabin and open the driver's door.	Below 1 V → Pulse generation (see waveform 2)
CG5B (D39-12) - CLG5 (D39-11)	W - R	Cabin oscillator front signal	Engine switch OFF → ON (IG) after more than 30 seconds of driver door's opening or closing.	Some Hz → 0 Hz
CG6B (D39-14) - CLG6 (D39-13)	SB - R	Cabin oscillator rear signal	Engine switch OFF → Close all the doors with the key in the cabin and turn the lock switch on.	Some Hz → 0 Hz
CG7B (D39-16) - CLG7 (D39-15)	O - G	Luggage compartment oscillator inner signal	Engine switch OFF → Turn the luggage compartment lock switch on with all the doors unlocked.	Some Hz → 0 Hz
SEN1 (D39-22) - Body ground	O - Body ground	Outside handle antenna signal	Front door LH outside handle is not held. → Front door LH outside handle is held.	10 to 14 V → Below 1 V
SEN2 (D39-23) - Body ground	B - Body ground	Outside handle antenna signal	Front door LH outside handle is not held. → Front door LH outside handle is held.	10 to 14 V → Below 1 V
RCO (D39-29) - Body ground	G - Body ground	Tuner power source	Engine switch OFF, all doors closed and key switch OFF → ON	Below 1 V → 4.6 to 5.4 V
VC5 (D39-30) - Body ground	O - Body ground	Transponder key amplifier power supply	Key is not in the vehicle. → Have the key outside the cabin and open the driver's door.	Below 1 V → 4.6 to 5.4 V
CG8B (D39-32) - CLG8 (D39-31)	P - LG	Luggage compartment oscillator outer signal	Engine switch OFF → Turn the luggage compartment lock switch on with all the doors unlocked.	Some Hz → 0 Hz
CLG1 (D39-33) - Body ground	GR - Body ground	Door oscillator output signal	All doors closed (locked), engine switch OFF → ON (IG)	Some Hz → 0 Hz
CG1B (D39-34) - Body ground	V - Body ground	Door oscillator output signal	All doors closed (locked), engine switch OFF → ON (IG)	Some Hz → 0 Hz
CLG2 (D39-35) - Body ground	LG - Body ground	Door oscillator output signal	All doors closed (locked), engine switch OFF → ON (IG)	Some Hz → 0 Hz
CG2B (D39-36) - Body ground	BR - Body ground	Door oscillator output signal	All doors closed (locked), engine switch OFF → ON (IG)	Some Hz → 0 Hz
ASEL (D39-37) - Body ground	V - Body ground	Tuner select signal	Turn the luggage compartment lock switch on with all the doors unlocked.	Below 1 V → 4.5 to 6.0 V
RDA (D39-38) - Body ground	Y - Body ground	Tuner input signal	Engine switch OFF, all doors closed, the key is not in the action area. → The key is in the action area.	10 to 14 V → Below 1 V
RSSI (D39-39) - Body ground	R - Body ground	Tuner radio wave detection signal	Engine switch OFF, all doors closed, the key is not in the action area. → The key is in the action area.	10 to 14 V → Below 1 V
SEL3 (D40-1) - Body ground	L - Body ground	Outside handle antenna signal	Move the key more than 5 m (16.4 ft) away from the rear door LH. → Bring it to the outside handle.	10 to 14 V → Below 1 V

Symbols (Terminals No.)	Wiring Color	Terminal Description	Condition	Specified Condition
SEL4 (D40-2) - Body ground	B - Body ground	Outside handle antenna signal	Move the key more than 5 m (16.4 ft) away from the rear door RH. → Bring it to the outside handle.	10 to 14 V → Below 1 V
CLG3 (D40-8) - Body ground	W - Body ground	Door oscillator output signal	All doors closed (locked), engine switch OFF → ON (IG)	Some Hz → 0 Hz
CG3B (D40-9) - Body ground	B - Body ground	Door oscillator output signal	All doors closed (locked), engine switch OFF → ON (IG)	Some Hz → 0 Hz
CLG4 (D40-10) - Body ground	V - Body ground	Door oscillator output signal	All doors closed (locked), engine switch OFF → ON (IG)	Some Hz → 0 Hz
CG4B (D40-11) - Body ground	P - Body ground	Door oscillator output signal	All doors closed (locked), engine switch OFF → ON (IG)	Some Hz → 0 Hz
SEN4 (D40-27) - Body ground	O - Body ground	Outside handle antenna signal	Rear door LH outside handle is not held. → Rear door LH outside handle is held.	10 to 14 V → Below 1 V
SEN3 (D40-28) - Body ground	BR - Body ground	Outside handle antenna signal	Rear door LH outside handle is not held. → Rear door LH outside handle is held.	10 to 14 V → Below 1 V

DL

If the result is not as specified, the certification ECU may have a malfunction.

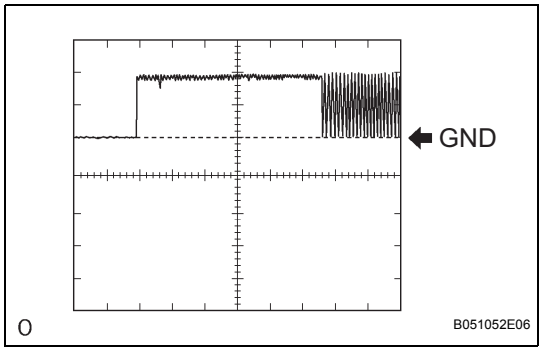

(e) Inspect using oscilloscope.
Waveform 1 (Reference):

Terminal	TXCT - Body ground
Tool Setting	2 V/DIV, 10 ms/DIV
Condition	The key is not in the cabin.

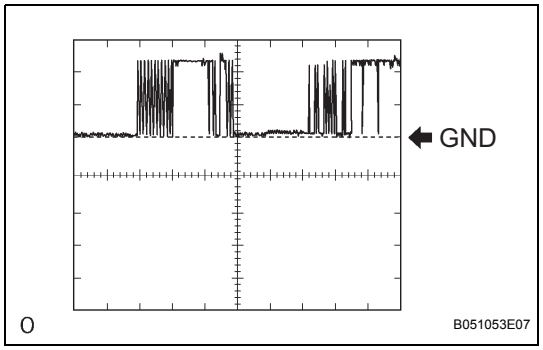

(f) Inspect using oscilloscope.
Waveform 2 (Reference):

Terminal	CODE - Body ground
Tool Setting	2 V/DIV, 20 ms/DIV
Condition	The key is not in the cabin.

2. CHECK ID CODE BOX

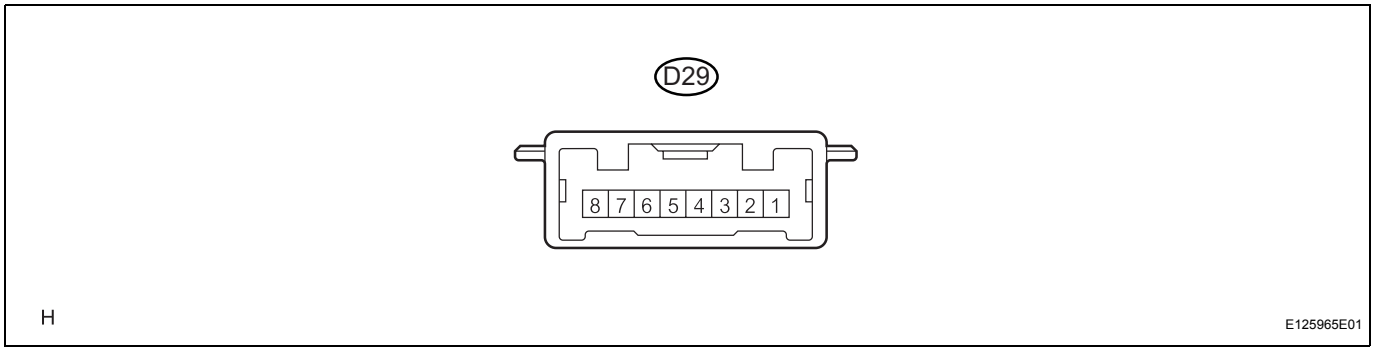

(a) Disconnect the D29 ID code box connector.

(b) Measure the resistance of each terminal of the wire harness side connector.

Resistance

Symbols (Terminals No.)	Wiring Color	Terminal Description	Condition	Specified Condition
LIN (D29-3) - Body ground	V - Body ground	LIN line	Always	10 kΩ or higher
GND (D29-8) - Body ground	W-B - Body ground	Ground	Always	Below 1 Ω
MPX8 (D29-1) - Body ground	W - Body ground	MPX line	Always	10 kΩ or higher

If the result is not as specified, there may be a malfunction on the wire harness side.

(c) Reconnect the D29 ECU connector.

(d) Measure the voltage of each terminal of the connector.

Standard

DL

Symbols (Terminals No.)	Wiring Color	Terminal Description	Condition	Specified Condition
EFIO (D29-6) - Body ground	L - Body ground	ECM output signal	Engine switch ON (IG)	Pulse generation (see waveform 1)
EFII (D29-5) - Body ground	BR - Body ground	ECM input signal	Always	Pulse generation (see waveform 2)

If the result is not as specified, the ID code box may have a malfunction.

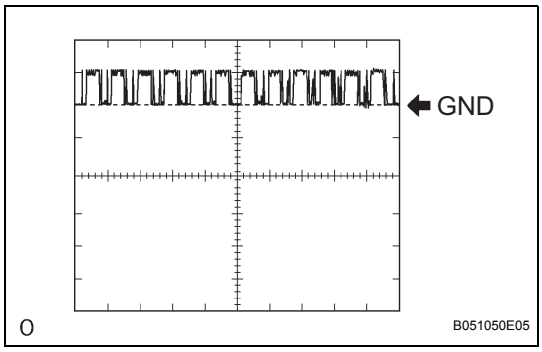

(e) Inspect using oscilloscope.
Waveform 1 (Reference):

Terminal	EFIO - Body ground
Tool Setting	10 V/DIV, 100 ms/DIV
Condition	Engine switch ON (IG)

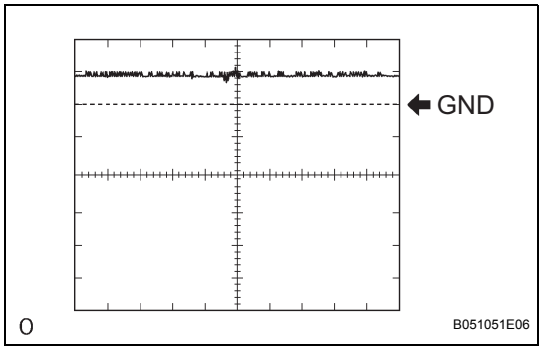

(f) Inspect using oscilloscope.
Waveform 2 (Reference):

Terminal	EFII - Body ground
Tool Setting	10 V/DIV, 100 ms/DIV
Condition	Always

3. POWER SOURCE CONTROL ECU

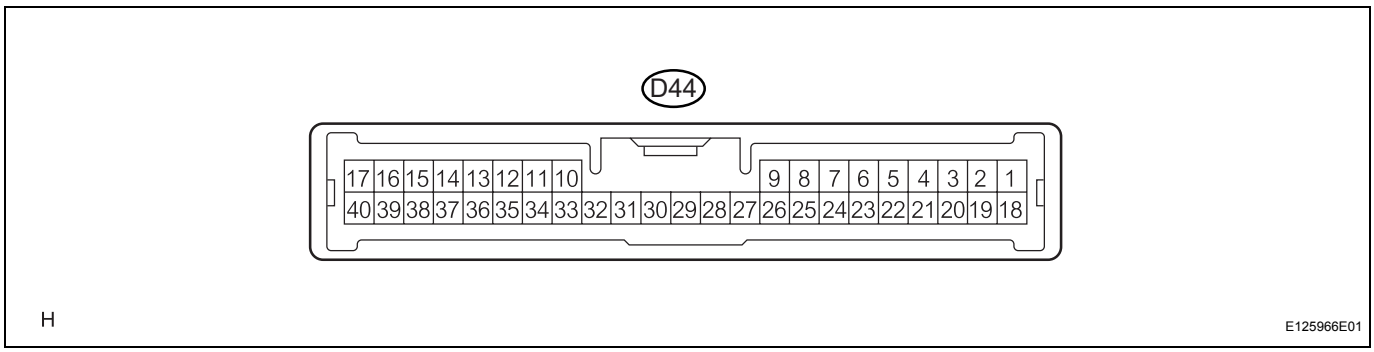

(a) Disconnect the D44 ECU connector.
(b) Measure the resistance of each terminal of the wire harness side connector.

Resistance

Symbols (Terminals No.)	Wiring Color	Terminal Description	Condition	Specified Condition
MPX1 (D44-7) - Body ground	B - Body ground	MPX line	Always	10 kΩ or higher
MPX2 (D44-24) - Body ground	LG - Body ground	MPX line	Always	10 kΩ or higher
LINI (D44-30) - Body ground	BR - Body ground	LIN line	Always	10 kΩ or higher

If the result is not as specified, there may be a malfunction on the wire harness side.
(c) Reconnect the D44 ECU connector.
(d) Measure the voltage and frequency of each terminal of the connector.

Voltage

Symbols (Terminals No.)	Wiring Color	Terminal Description	Condition	Specified Condition
SLR+ (D44-32) - GND2 (D44-6)	BR - W-B	Power source for steering lock actuator	Steering lock motor operate → not operate	Below 1 V → 10 to 14 V
SLP (D44-26) - GND2 (D44-6)	GR - W-B	Steering lock actuator UNLOCK position signal	Steering is locked → released	Below 1 V → 10 to 14 V
SPD (D44-19) - GND2 (D44-6)	W - W-B	Vehicle speed signal	Engine switch ON (IG), Rotate driving wheel slowly	Pulse generation
TACH (D44-2) - Body ground	L - Body ground	Engine revolution speed signal	Idling	Pulse generation
P (D44-5) - Body ground	P - Body ground	Shift lock signal	Shift lever except P position	Below 1.5 V
CTSW (D44-31) - Body ground	O - Body ground	Starter assist signal	Cranking	Below 1.5 V
STSW (D44-39) - Body ground	R - Body ground	Starter request signal	Brake pedal depressed, Shift lever P or N position, Engine switch ON (ACC, IG, START)	10 to 14 V
STR1 (D44-17) - GND2 (D44-6)	SB - W-B	Park / neutral position switch	Shift lever P or N position, Engine switch START	10 to 14 V
STR2 (D44-15) - GND2 (D44-6)	B - W-B	Starter signal	Shift lever P or N position, Engine switch START	10 to 14 V
INDS (D44-4) - Body ground	Y - Body ground	Vehicle condition signal	Brake pedal depressed, Shift lever P or N position, Engine switch ON (ACC, IG, START)	10 to 14 V
INDW (D44-13) - Body ground	GR - Body ground	Warning signal	Smart key system malfunction	Pulse generation
SWIL (D44-36) - Body ground	R - Body ground	Illumination signal	Light control switch TAIL or HEAD	10 to 14 V

If the result is not as specified, there may be a malfunction on the wire harness side.

(e) Reconnect the D44 ECU connector.

(f) Measure the voltage of the connectors.

Voltage

Symbols (Terminals No.)	Wiring Color	Terminal Description	Condition	Specified Condition
SLP1 (D44-4) - GND (D14-1)	GR - W-B	Steering lock actuator UNLOCK position signal	Steering is locked → released	Below 1 V → 10 to 14 V
IGE (D44-3) - GND (D14-1)	BR - W-B	Power source for steering lock actuator	Steering lock motor operate → not operate	Below 1 V → 10 to 14 V

If the result is not as specified, the power source control ECU may have a malfunction.

DIAGNOSIS SYSTEM

1. DESCRIPTION

(a) The certification ECU controls the function of the smart key system on the vehicle. Data of the smart key system and the Diagnostic Trouble Code (DTC) can be read in the Data Link Connector 3 (DLC3) of the vehicle. When a malfunction occurs in the smart key system, even though the smart key system warning light does not turn on, DTCs can be checked.
When the system seems to be malfunctioning, use the intelligent tester to check for a malfunction and perform repairs.

2. CHECK DLC3

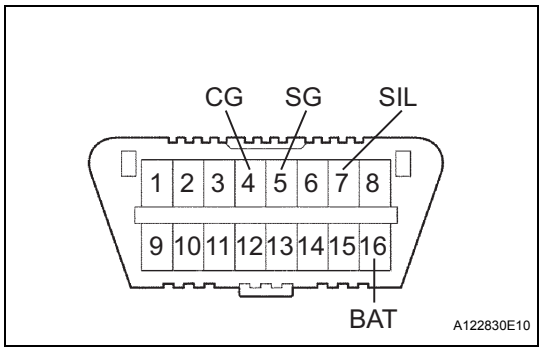

(a) The vehicle uses the ISO 15765-4 for communication protocol. The terminal arrangement of the DLC3 complies with SAE J1962 and matches the ISO 15765-4 format.

DL

Symbol	Terminal No.	Name	Reference terminal	Result	Condition
SIL	7	Bus "+" line	5 - Signal ground	Pulse generation	During transmission
CG	4	Chassis ground	Body ground	Below 1 Ω	Constant
SG	5	Signal ground	Body ground	Below 1 Ω	Constant
BAT	16	Battery positive	Body ground	11 to 14 V	Constant

If the result is not as specified, the DLC3 may have a malfunction. Repair or replace the harness and connector.

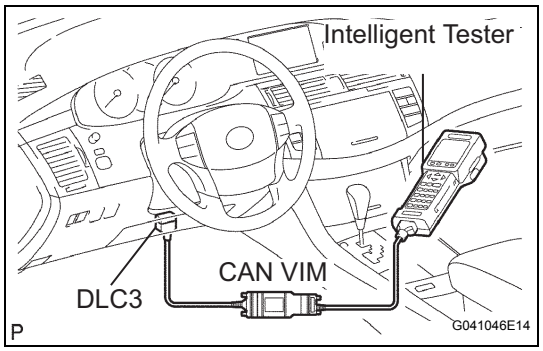

(b) Connect the cable of the intelligent tester to the DLC3, turn the engine switch on (IG) and attempt to use the intelligent tester. If the screen displays a communication error message, a problem may be on the vehicle side or tester side.

- When troubleshooting the smart key system using the intelligent tester with the engine switch off, connect the intelligent tester to the vehicle and repeat turning any of the courtesy light switches on and off until communication between the tester and the vehicle begins (the interval between ON and OFF should be less than 1.5 sec.).
- If communication is normal when the tester is connected to another vehicle, inspect the DLC3 of the original vehicle.

- If communication is still impossible when the tester is connected to another vehicle, the problem may be in the tester itself. Consult the Service Department listed in the tester's instruction manual.

3. CHECK BATTERY VOLTAGE

(a) Check the battery voltage.

Voltage:

11 to 14 V

If the voltage is below 11 V, replace the battery before proceeding.

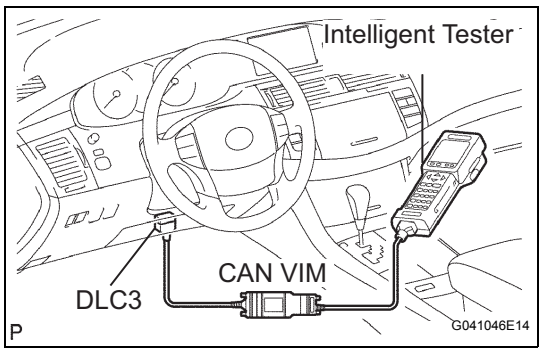

DTC CHECK / CLEAR

1. CHECK DTC

(a) Connect the intelligent tester to the DLC3.

(b) Turn the engine switch on (IG).

(c) Read the DTCs by following the directions on the tester screen.

HINT:

Refer to the intelligent tester operator's manual for further details.

2. CLEAR DTC

(a) Connect the intelligent tester to the DLC3.

(b) Turn the engine switch on (IG).

(c) Erase the DTCs by following the directions on the tester screen.

HINT:

Refer to the intelligent tester operator's manual for further details.

FAIL-SAFE CHART

If any of the following codes is recorded, the power source control ECU enters the fail-safe mode.

POWER SOURCE CONTROL ECU

DTC No.	Item	Fail-safe Function	Fail-safe Deactivation Condition
B2283	Vehicle speed sensor circuit	Steering does not lock	"Pass" condition is detected

CERTIFICATION ECU

DTC No.	Item	Fail-safe Function	Fail-safe Deactivation Condition
B2781	Steering lock ECU malfunction	Engine can not be started	"Pass" condition is detected
B2782	Steering lock ECU IGE signal circuit	Engine can not be started	"Pass" condition is detected

DATA LIST / ACTIVE TEST

1. DATA LIST

HINT:

By accessing the DATA LIST displayed on the intelligent tester, you can perform such functions as reading the values of switches and sensors without removing any parts. Reading the DATA LIST is the first step of troubleshooting and is one method to shorten labor time.

(a) Connect the intelligent tester to the DLC3.
(b) Turn the engine switch on (IG).
(c) Following the display on the tester, select "DATA LIST".

PWR SOURCE CTRL (Power source control ECU):

Item	Measurement Item / Range (Display)	Normal Condition	Diagnostic Note
SHIFT P SIG	Status of shift P position switch / ON or OFF	ON: Shift lever is P position OFF: Shift lever is non-P position	-
STR UNLOCK SW	Status of steering unlock switch / ON or OFF	ON: Steering unlock switch is UNLOCK OFF: Steering unlock switch is LOCK	-
STOP LAMP SW1	Status of stop light switch1 / ON or OFF	ON: Brake pedal pressed OFF: Brake pedal depressed	-
START SW1	Status of start switch1 / ON or OFF	ON: Engine switch is ON (IG) OFF: Engine switch is OFF	-
START SW2	Status of start switch2 / ON or OFF	ON: Engine switch is ON (IG) OFF: Engine switch is OFF	-
N SW/C SW	Status of Neutral SW / ON or OFF	ON: Shift lever is N position OFF: Shift lever is non-N position	-
RATCH CIRCUIT	Status of ratch circuit / ON or OFF	ON: Engine switch is ON (IG) OFF: Engine switch is OFF or ON (ACC) or ENGINE START	-
IG1 RELAY MON1	Status of ignition1 relay monitor (outside) / ON or OFF	ON: Engine switch is ON (IG) OFF: Engine switch is OFF	-
IG1 RELAY MON2	Status of ignition1 relay monitor (inside) / ON or OFF	ON: Engine switch is ON (IG) OFF: Engine switch is OFF	-
IG2 RELAY MON1	Status of ignition2 relay monitor (outside) / ON or OFF	ON: Engine switch is ON (IG) OFF: Engine switch is OFF	-
IG2 RELAY MON2	Status of ignition2 relay monitor (inside) / ON or OFF	ON: Engine switch is ON (IG) OFF: Engine switch is OFF	-
ST RELAY MON	Status of starter relay monitor / ON or OFF	ON: ST relay is ON OFF: ST relay is OFF	-
ST REQUEST SIG	Status of starter requesting signal monitor / ON or OFF	ON: ST relay is ON OFF: ST relay is OFF	-
ACC RELAY MON	Status of ACC relay monitor / ON or OFF	ON: Engine switch is ON (ACC) OFF: Engine switch is OFF	-
ACC CUT SIG	Status of ACC relay cut signal / ON or OFF	ON: Engine switch is OFF OFF: Engine switch is ON (ACC)	-
VEHICLE SPD SIG	Status of vehicle speed signal / STOP or RUN	ON: Vehicle is stopped OFF: Vehicle is running	-
E/G COND	Status of engine condition / STOP or RUN	ON: Engine is stopped OFF: Engine is running	When engine condition is rotating
PWR COND	Status of power supply condition / ALL, ACC ON, IG1, IG2, ST ON	ALL: All relay is ON ACC ON: ACC relay is ON IG1: IG1 relay is ON IG2: IG2 relay is ON ST ON: ST relay is ON	When ready signal allows to be capable driving

Item	Measurement Item / Range (Display)	Normal Condition	Diagnostic Note
#CODE	Status of Number of diagnosis codes / Min.: 0, Max.: 255	-	-

SMART KEY (Certification ECU):

Item	Measurement Item / Range (Display)	Normal Condition	Diagnostic Note
D TOUCH SENSOR	Status of touch sensor front LH / ON or OFF	ON: Touch sensor is touched OFF: Touch sensor does not touched	When the outside handle of the driver's door is touched by a person who does not carry the key after "D SELECT SIG" of the ACTIVE TEST is performed, "D TOUCH SENSOR" in the DATA LIST turn on.
P TOUCH SENSOR	Status of touch sensor front RH / ON or OFF	ON: Touch sensor is touched OFF: Touch sensor does not touched	When the outside handle of the driver's door is touched by a person who does not carry the key after "P SELECT SIG" of the ACTIVE TEST is performed, "P TOUCH SENSOR" in the DATA LIST turn on.
DR TOUCH SENSOR	Status of touch sensor rear LH / ON or OFF	ON: Touch sensor is touched OFF: Touch sensor does not touched	-
DP TOUCH SENSOR	Status of touch sensor rear RH / ON or OFF	ON: Touch sensor is touched OFF: Touch sensor does not touched	-
D TRIGGER	Lock switch front LH / ON or OFF	ON: Lock switch is pushed OFF: Lock switch is not pushed	-
P TRIGGER	Lock switch front RH / ON or OFF	ON: Lock switch is pushed OFF: Lock switch is not pushed	-
DR TRIGGER	Lock switch rear LH / ON or OFF	ON: Lock switch is pushed OFF: Lock switch is not pushed	-
DP TRIGGER	Lock switch rear RH / ON or OFF	ON: Lock switch is pushed OFF: Lock switch is not pushed	-
TR/B-DOOR UNLK	Luggage compartment open switch condition / ON or OFF	ON: Luggage compartment open switch is pushed OFF: Luggage compartment open switch does not pushed	-
IG SW	Engine switch IG condition / ON or OFF	ON: Engine switch ON (IG) OFF: Engine switch OFF	-
ACC SW	Engine switch ACC condition / ON or OFF	ON: Engine switch ON (ACC) OFF: Engine switch OFF	-
IGNITION AREA	Ignition available area / FRONT or ALL	Customization status is displayed	-
PARK WAIT TIME	Parking wait time / 0.5s, 1.5s, 2.5s, 5s	Customization status is displayed	-
TRUNK OPEN MODE	Luggage compartment door open mode with vehicle locked / ON or OFF	Customization status is displayed	-
KEY LO-BATT WRN	Low key battery warning / ON or OFF	Customization status is displayed	-
UNMATCH V-ID	Unmatched vehicle-ID / YES orNO	YES: Key ID matches vehicle NO: Key ID does not match vehicle	-
NO RESPONSE	No response / YES or NO	YES: Response from key NO: No response from key	-
UNMATCH FORMAT	Unmatched response code and format / YES or NO	YES: Key ID code matches NO: Key ID code does not match	-
LOW BATTERY	Key low battery / YES or NO	YES: Key battery voltage drops NO: Key battery voltage is normal	-

DL

Item	Measurement Item / Range (Display)	Normal Condition	Diagnostic Note
WRONG CODE	ID code difference / YES or NO	YES: Key ID code matches NO: Key ID code does not match	-
WRONG C CODE	C code difference (Response) / YES or NO	YES: Key ID code matches NO: Key ID code does not match	-
P/S 10-MIN	Power save counter 10 minutes / Min.: 0, Max.: 255	The number of power saved for 10 minutes is displayed	-
P/S 5-DAY	Power save counter 5 days / Min.: 0, Max.: 255	The number of power saved for 5 days is displayed	-
P/S 14-DAY	Power save counter 14 days / Min.: 0, Max.: 255	The number of power saved for 10 days is displayed	-
WRONG ID CODE	ID code difference / YES or NO	YES: Key ID code matches NO: Key ID code does not match	-
WRONG ROL CODE	Rolling code difference / YES or NO	YES: Key rolling code matches NO: Key rolling code does not match	-
DOOR UNLOCK MOD	Door unlock mode / ALL, EACH, D_DOOR, SIDE	Mode status is displayed	-
FUNCTION CANCEL	Entry door lock function cancel / ON or OFF	Mode status is displayed	-
PERMIT(START)	PERMIT(START) / NG or OK	NG: Engine start without permission OK: Engine start permission	-
IMMOBILIZER	Immobilizer function status / SET or UNSET	SET: The key is not inside the cabin UNSET: Push the engine switch with the key inside the cabin with depressing the brake pedal	-
MASTER KEY	Master key / MATCH or NO MATCH	MATCH: Key code is sent NO MATCH: Unmatched key code	-
SUB KEY	Sub key / MATCH or NO MATCH	MATCH: Key code is sent NO MATCH: Unmatched key code	-
BCC	BCC malfunction / NG or OK	NG: Correct data sensing OK: Incorrect data sensing	-
STATUS	Abnormal status / NG or OK	NG: Malfunction OK: Normal	-
ENCRYPT CODE	Different encrypt code / NG or OK	NG: Data error OK: Normal	-
SERIAL NUMBER	Different serial number / NG or OK	NG: Data error OK: Normal	-
FRAME	Frame error / NG or OK	NG: Data error OK: Normal	-
RESPONSE	Response / NG or OK	NG: With no response OK: Those with a response	-
WIRLES COM ID	Wireless starter communication ID / Registered or No registered	-	-
WIRLES C-CODE	Wireless C code / Registered or No registered	-	-
SCLK SLEEP COND	Steering lock sleep condition / YES or NO	-	-
SCLK START COND	Steering lock start condition / YES or NO	-	-
STEERING LOCK	Steering lock / SET or UNSET	-	This status changes depending on the state of some sensors.
STEERING UNLOCK	Steering unlock / SET or UNSET	-	This status changes depending on the state of some sensors.

Item	Measurement Item / Range (Display)	Normal Condition	Diagnostic Note
ENG START COND	Engine start condition / OK or NG	OK: Engine start permission NG: Engine start without permission	-
SENSOR VALUE	Sensor malfunction / NG (PAST) or OK	NG (PAST): Sensor malfunction OK: No malfunction	-
PWR SUPPLY SHORT	Short in ECU / NG (PAST) or OK	NG (PAST): Short in ECU OK: No malfunction	-
PWR SUPPLY OPEN	Open in ECU / NG (PAST) or OK	NG (PAST): Open in ECU OK: No malfunction	-
MTR DRIVER SHRT	Short in driver ECU / NG (PAST) or OK	NG (PAST): Short in driver ECU OK: No malfunction	-
MTR DRIVER OPEN	Open in driver ECU / NG (PAST) or OK	NG (PAST): Open in driver ECU OK: No malfunction	-
LCK/UNLCK REC	Steering lock command reception record / YES or NO	YES: Steering lock / unlock signal received NO: Steering lock / unlock signal not received	-
LCK BAR STUCK	Lock bar stuck malfunction / NG (PAST) or OK	NG (PAST): Lock bar stuck malfunction OK: No malfunction	-
PUSH START ERR	Push button start function malfunction / NG (PAST) or OK	NG (PAST): Malfunction in push button start OK: No malfunction	-
IG2 (LINER)	IG2 status / ON or OFF	ON: 10 to 14 V OFF: Below 1 V	-
IG (LIN)	LIN bus start-up status / ON or OFF	ON: LIN bus started-up OFF: LIN bus not started-up	-
IDBX SLEEP COND	ID code box sleep condition / YES or NO	YES: ID code box sleep available NO: ID code box sleep not available	-
IDBX START COND	ID code box start condition / YES or NO	YES: ID code box started-up NO: ID code box not started-up	-
EFI CODE RECEIV	EFI code receive / NG or OK	NG: EFI code does not receive OK: EFI code received	-
START RQST	ID code box start request condition / YES or NO	YES: ID code box start request condition NO: ID code box non-start request condition	-
CODE RQST	3 bit code request / NG or OK	NG: 3 bit code does not receive OK: 3 bit code received	-
S CODE MATCH	Code verification result / OK or NG	OK: Verification confirmed NG: Verification not conformed	-
L CODE MATCH	Code verification result / OK or NG	OK: Verification confirmed NG: Verification not conformed	-
UNLC RQ RECEIVE	Steering unlock request / YES or NO	YES: Steering unlock NO: Steering lock	-
LCK RQ RECEIVE	Steering lock request / YES or NO	YES / NO	-
START RQST-PAST	Engine start request / YES or NO	YES / NO	-
EFI COM	EFI communication / OK or NG	NG: EFI code does not receive OK: EFI code received	-
L CODE MATCH	Code verification result / OK or NG	OK: Verification confirmed NG (PAST): Verification not conformed	-
S CODE MATCH	Code verification result / OK or NG	OK: Verification confirmed NG (PAST): Verification not conformed	-

Item	Measurement Item / Range (Display)	Normal Condition	Diagnostic Note
#CODE	Diagnostic trouble code / Min.: 0, Max.: 255	-	-

METER (Combination Meter):

Item	Measurement Item / Range (Display)	Normal Condition	Diagnostic Note
SPEED METER	Vehicle speed / Min.: 0 km/h (0 mph), Max.: 255 km/h (158 mph)	Almost the same as the actual vehicle speed (Wheel driving)	-
TACHO METER	Engine speed / Min.: 0 rpm, Max.: 12,750 rpm	Almost the same as the actual engine speed (When engine is running)	-
KEY REMND VOLUM	Key remind warning volume / LARGE, MEDIUM, SMALL	Customization status is displayed	-
KEY REMND SOUND	Key remind warning sound / FAST, NORMAL, SLOW	Customization status is displayed	-

SMART KEY (Steering Lock):

Item	Measurement Item / Range (Display)	Normal Condition	Diagnostic Note
KEY SW	Key unlock warning switch / ON or OFF	ON: The key is inside the cabin OFF: The key is not inside the cabin	-
IG SW	Status of ignition relay / ON or OFF	ON: Engine switch is ON (IG) OFF: Engine switch is OFF (IG)	-
IMMOBILISER	Immobilizer system status / UNSET or SET	UNSET: Push the engine switch with the key inside the cabin while depressing the brake pedal SET: The key is not inside the cabin	-
RESPONSE	Transponder chip data / OK or NG	OK: With no response NG: Those with a response	-
FRAME	Transponder chip data / OK or NG	OK: Data OK NG: Data error	-
SERIAL NUMBER	Transponder chip data / OK or NG	OK: Data OK NG: Data error	-
ENCRYPT CODE	Transponder chip data / OK or NG	OK: Data OK NG: Data error	-
STATUS	Transponder chip data / OK or NG	OK: Data OK NG: Data error	-
BCC	Transponder chip data / OK or NG	OK: Correct data sensing NG: Incorrect data sensing	-
SUB KEY	Sub key code signal / MATCH or NO MATCH	MATCH: Sub key code is sent NO MATCH: Unmatched sub key	-
MASTER KEY	Master key code signal / MATCH or NO MATCH	MATCH: Master key code is sent NO MATCH: Unmatched master key	-
REGIST SUB CODE	Number of registered sub key / Min.: 0, Max.: 15	Number of registered sub key	-
REGIST MAS CODE	Number of registered master key / Min.: 0, Max.: 15	Number of registered sub key	-
REG CODE SPACE	Memory space for key code registration / NOT FULL or FULL	FULL: Impossible to register key code any more NOT FULL: Possible to register more key codes more	-
+B	Power source / BREAK or NORMAL	BREAK: Power source open NORMAL: Power source normal	-
ANTENNA COIL	Transponder key amplifier coil condition / FAIL or NORMAL	FAIL: Antenna coil is malfunctioning NORMAL: Antenna coil is normal	-

Item	Measurement Item / Range (Display)	Normal Condition	Diagnostic Note
G-CODE DECISION	YES or NO	-	-
G-CODE SUPPORT	SUPPORT or NOT SUP	-	-
HAZARD ANS BACK	Hazard answer back / ON or OFF	ON: Hazard answer back function operates OFF: Hazard answer back function does not operate	-
WIRLS BUZZ RESP	Wireless door lock buzzer response / ON or OFF	ON: Wireless door lock buzzer sounds OFF: Wireless door lock buzzer does not sounds	-

2. ACTIVE TEST

HINT:

Perform the ACTIVE TEST using the intelligent tester to operate the motors of the front seat outer belts.

Performing the ACTIVE TEST is one of the methods to shorten labor time. It is possible to display the DATA LIST during the ACTIVE TEST.

(a) Connect the intelligent tester to the DLC3.

(b) Turn the engine switch on (IG).

(c) Following the display on the tester, select the "ACTIVE TEST".

SMART KEY (Certification ECU):

Item	Vehicle Condition / Test Details	Diagnostic Note
IN LUG TUNER	Inside Trunk Tuner ON / OFF	-
OVERHEAD TUNER	Cabin Tuner ON / OFF	-
D TRANSMITTER	Door Oscillator (Front LH) ON / OFF	-
P TRANSMITTER	Door Oscillator (Front RH) ON / OFF	-
Fr TRANSMITTER	Cabin Oscillator (Front) ON / OFF	-
IN-BDR TRANSMTTR	Luggage Compartment Oscillator (Inner) ON / OFF	-
BDOOR TRANSMTTR	Luggage Compartment Oscillator (Outer) ON / OFF	-
D SELECT SIG	D-sheet Select ON/OFF	The same condition as when the key is brought near the vehicle will occur even if the key is not brought near the vehicle.
P SELECT SIG	P-sheet Select ON/OFF	The same condition as when the key is brought near the vehicle will occur even if the key is not brought near the vehicle.

METER (Combination Meter):

Item	Vehicle Condition / Test Details	Diagnostic Note
OPEN DOOR WARN	Open Door Warning Light ON / OFF	-
KEY REMND BUZZR	Key Remained Buzzer ON / OFF	-
WARNING BUZZER	Warning Buzzer ON / OFF	-
SMART KEY	Smart Key System Warning Light ON / OFF	-

SMART KEY (Steering Lock ECU):

Item	Vehicle Condition / Test Details	Diagnostic Note
SECURITY INDIC	Security Indicator Light ON / OFF	-

3. SMART KEY SYSTEM DIAGNOSIS MODE

HINT:

- The smart key system diagnostic mode can be used to check that the key and each tuner operate normally without removing the tuners from the vehicle.
- The smart key system diagnostic mode check is performed with the intelligent tester.

(a) Connect the intelligent tester to the DLC3.
(b) Turn the engine switch on (IG).
(c) Following the display on the tester, select "SMART KEY" → "ID UTILITY".
(d) Select each "Item" and bring the key up to the action area in which the system can detect the key.
If the system functions normally, the wireless door lock buzzer sounds once.

SMART DIAG MODE:

Item	Tuner
D+OVERHEAD	Cabin
P+OVERHEAD	Cabin
DR+OVERHEAD	Cabin
PR+OVERHEAD	Cabin
FR+OVERHEAD	Cabin
RR+OVERHEAD	Cabin
IN-LUG+IN-LUG	Luggage
LUGG+OVERHEAD	Cabin
LUGG+IN-LUG	Luggage
IN-BDOR+OVERHEAD	Cabin
BDOR+OVERHEAD	Cabin
IMMOBI+AMP	Transponder key amplifier

DIAGNOSTIC TROUBLE CODE CHART

HINT:
If a trouble code is displayed during the DTC check, check the circuit listed for the code in the table below (Proceed to the page listed for that circuit).

SMART KEY

DTC No.	Detection Item	Trouble Area	See page
B1242	Wireless Door Lock Tuner Circuit Malfunction	1. Tuner 2. Luggage compartment tuner 3. Wire harness 4. Certification ECU	DL-182
B2784	Antenna Coil Open / Short	1. Engine switch 2. Wire harness 3. Certification ECU	DL-186
B2785	Communication Malfunction between ECUs Connected by LIN	1. Wire harness 2. Steering lock actuator (Steering lock ECU) 3. ID code box 4. Power source control ECU 5. Certification ECU	DL-189
B2786	No Response from Steering Lock ECU	1. Wire harness 2. Steering lock actuator (Steering lock ECU) 3. Certification ECU	DL-193
B2789	No Response from ID BOX	1. Wire harness 2. ID code box 3. Certification ECU	DL-195
B278A	Short to GND in Immobiliser System Power Source Circuit	1. Wire harness 2. Engine switch 3. Certification ECU	DL-197
B2790	ID BOX EEPROM Malfunction	ID code box	DL-199
B2791	Communication Condition Failure between ECM	1. Wire harness 2. ID code box 3. ECM	DL-200

ECM

DTC No.	Detection Item	Trouble Area	See page
B2799	Communication with Immobiliser	1. Wire harness 2. ID code box 3. ECM	DL-202

ON-VEHICLE INSPECTION

1. CHECK SMART KEY SYSTEM OPERATION INSPECTION

(a) Inspect the entry door unlock function.

(1) Use the wireless lock operation to lock all the doors. With the key in your possession, touch a door's outside handle (touch sensor) and check that all doors unlock.

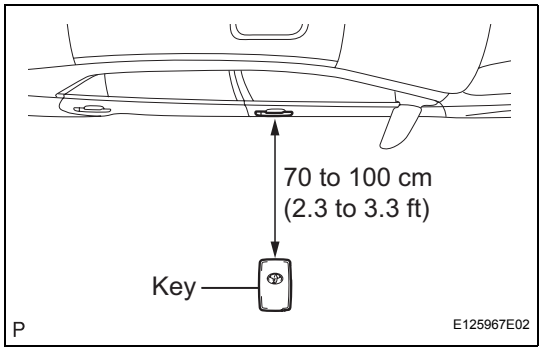

(2) Step 1: Inspect the entry door unlock operation's detection area. Hold the key at the same height as the door's outside handle (approximately 80 cm (2.6 ft) from the ground). Pay attention to the direction of the key in the illustration on the left. Check that when the key is brought within 70 to 100 cm (2.3 to 3.3 ft) of the vehicle, the system enters unlock standby mode. Unlock standby mode is signified by the key's red LED illumination.

(3) Step 2: Once the system enters unlock standby mode, touch the outside handle's sensor within 3 seconds. Check that the door unlocks.

(4) Repeat steps (1) and (2) for the remaining doors.

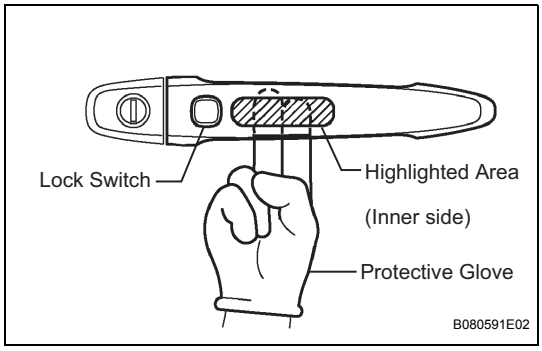

(5) Step 3: Inspect the door oscillator's response sensitivity. Wear protective gloves, set the system to unlock standby mode, and check that touching the highlighted area in the illustration with your index finger causes the door to unlock.

NOTICE:

When touching the highlighted area, tapping too quickly or having extended contact may not trigger the sensor. In such a case, the door will not unlock.

(6) Repeat step (3) for the remaining doors.

(b) Inspect the entry door lock function.

(1) Step 1: Close all of the vehicle's doors and set the system to unlock standby mode. With the key in your possession outside of the vehicle, check that pressing the lock switch locks all the doors.

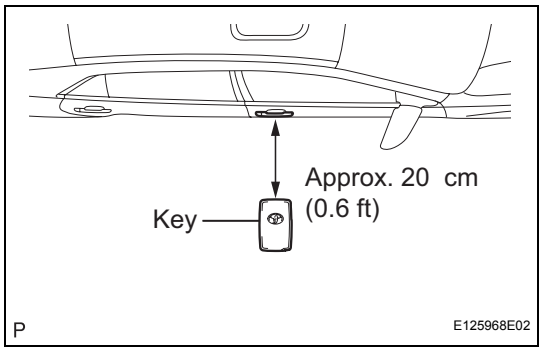

(2) Step 2: Inspect the door lock operation's detection area and the vehicle interior's wireless door lock receiver for wave leaks. Hold the key at a height of 0.1 m (10 cm (0.33 ft) above the lower edge of the window frame). Pay attention to the direction and position of the key in the illustration on the left. Check that when the key is approximately 20 cm (0.6 ft) from the vehicle and the lock switch is pressed, all the doors lock and the warning buzzer (for when the key is left) does not sound.

NOTICE:

If the warning buzzer sounds, the vehicle interior's wireless door lock receiver may have a wave leak.

HINT:

Due to the key being unable to communicate with the system within 20 cm (0.65 ft) from the outside handle, do not press the lock switch with the same hand that is holding the key. The doors will not lock.

(3) Repeat steps (1) and (2) for the remaining doors.

(c) Inspect the entry trunk open function.

(1) Close the luggage compartment door. With the key in your possession, check that pressing the luggage compartment open switch (trunk open switch) opens the luggage compartment door.

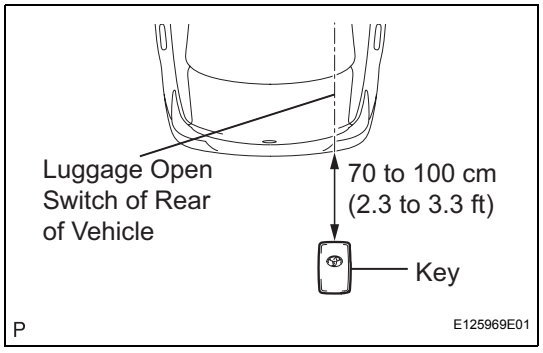

(2) Inspect the entry trunk open operation's detection area. Hold the smart key at the same height as the luggage electrical key switch (trunk open switch) (approximately 80 cm (2.6 ft) from the ground) and align it with the luggage open switch of the rear of the vehicle. Pay attention to the direction of the key in the illustration on the left. Check that when the key is brought within 70 to 100 cm (2.3 to 3.3 ft) of the vehicle, pressing the luggage compartment open switch opens the luggage compartment door.

(d) Inspect the push button start function.

(1) With the key in your possession, check that turning the engine switch on starts the engine.

(2) With the key in your possession, check that turning the engine switch from on (IG) to on (ACC) or OFF stops the engine.

DL

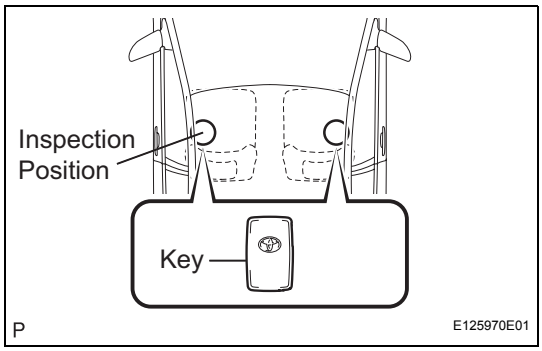

(3) Inspect the push button start operation's detection area. Pay attention to the direction of the key in the illustration on the left. Check that the engine can be started. When the key is in either of the two locations in the illustration.
NOTICE:
The engine cannot be started when the key is on the instrument panel or package tray, or in the glove box.

(e) Inspect the prevention of key confinement.

(1) Place the key into the trunk. Check that: 1) all doors locked and closing the luggage compartment door triggers the key's wireless door lock buzzer (which lasts approximately 20 seconds), and 2) pressing the luggage compartment open switch opens the luggage compartment door.

DL

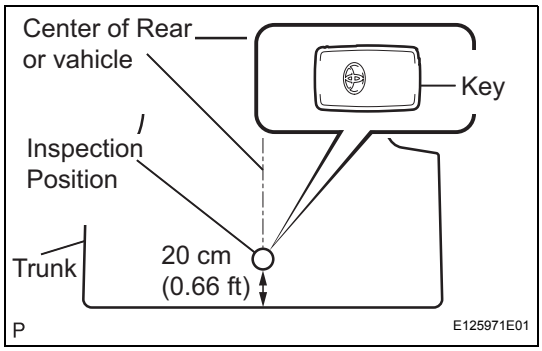

(2) Inspect the key lock-in prevention's detection area. Pay attention to the direction of the key in the illustration on the left. When the key is in either of the two locations in the illustration, check that: 1) closing the luggage compartment door sounds the key's wireless door lock buzzer, and 2) pressing the luggage compartment open switch opens the luggage compartment door.
NOTICE:
- **If the key is inside a metal briefcase, metal box or any other metal storage item, the key will not be able to be detected by the system.**
- **"Prevention of key confinement" function activates only when all the doors are locked.**

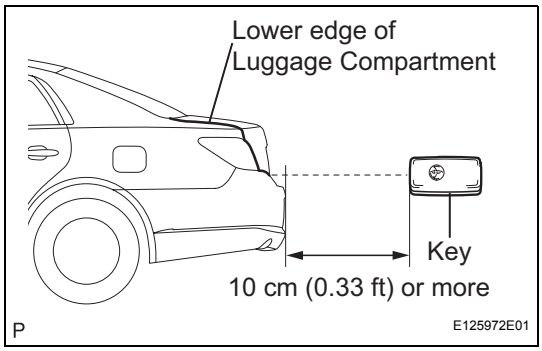

(3) Inspect the key lock-in prevention's detection area and the luggage compartment interior's luggage tuner for wave leaks. Hold the key at the same height as the lower edge of the luggage compartment door and align it with the center of the rear of the vehicle. Pay attention to the direction and position of the key in the illustration on the left. Check that when the key is 10 cm (0.33 ft) or more away from the vehicle's rear bumper, the key's wireless door lock buzzer does not sound.
HINT:
If the warning buzzer sounds, the trunk interior's luggage tuner may have a wave leak.

(f) Inspect the key cancel function.

(1) While the engine switch is on (IG), check that the luggage compartment open switch is the only switch in the smart key system that can be operated.

(g) Inspect the indicator function.

Condition	Indicator
Engine switch is ON (IG) mode and vehicle interior check is OK	Illuminates
Engine switch is OFF mode and one of the doors is open	Blinks
Engine switch is ON (IG) / ACC and all doors are locked	Off

HINT:
In cases where an illuminated condition and a blinking condition are both satisfied, the indicator will illuminate.

(h) Inspect the answer-back (hazard warning light flashing or buzzer sounding) function.

Operation	Hazard Warning Light	Buzzer
Entry door lock function	Flashes once	Sounds once
Entry door unlock function	Flashes twice	Sounds twice
Entry trunk open function	Does not flash	Does not sounds

DTC	B1242	Wireless Door Lock Tuner Circuit Malfunction

DESCRIPTION

- The tuner and the Luggage Compartment tuner are used as antennas for the entry and wireless door lock functions of the smart key system.
- The certification ECU decodes the requested smart key system operation by identifying a key code based on electric waves received via the tuner and the Luggage Compartment tuner. The ECU then sends a command, according to the requested operation, to each ECU. (e.g. If door lock operation is requested, the ECU sends a door lock command to the body ECU.)

DTC No.	DTC Detection Condition	Trouble Area
B1242	If the certification ECU detects that terminal RDA or RSSI is short-circuited, this DTC is stored.	• Tuner • Luggage compartment tuner • Wire harness • Certification ECU

DL

WIRING DIAGRAM

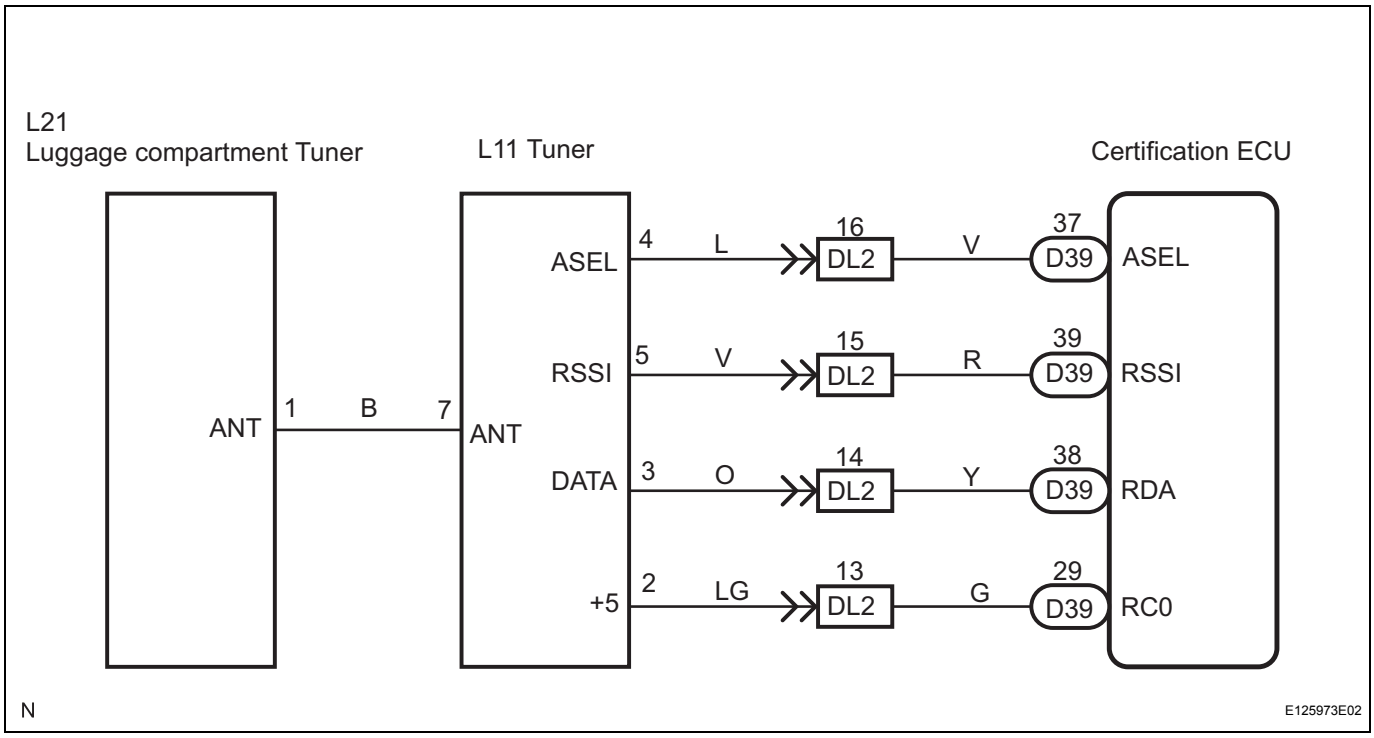

INSPECTION PROCEDURE

1	CHECK WIRE HARNESS (CERTIFICATION ECU - TUNER)

Certification ECU:

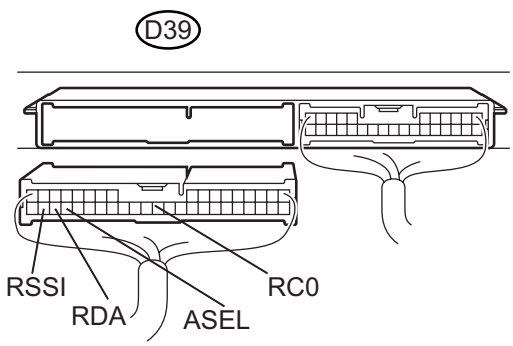

(a) Disconnect the D39 ECU connector.

Tuner:

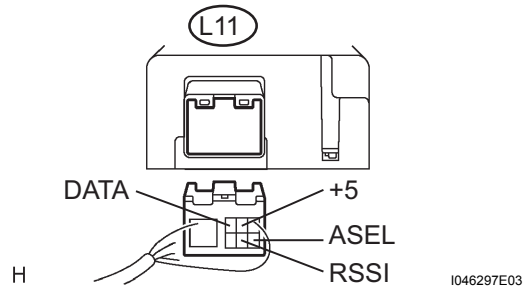

(b) Disconnect the L11 tuner connector.
(c) Measure the resistance according to the value(s) in the table below.

Resistance

Tester Connection	Condition	Specified Condition
D39-37 (ASEL) - L11-4 (ASEL)	Always	Below 1 Ω
D39-39 (RSSI) - L11-5 (RSSI)	Always	Below 1 Ω
D39-38 (RDA) - L11-3 (DATA)	Always	Below 1 Ω
D39-29 (RC0) - L11-2 (+5)	Always	Below 1 Ω
D39-37 (ASEL) - Body ground	Always	10 kΩ or higher
D39-39 (RSSI) - Body ground	Always	10 kΩ or higher
D39-38 (RDA) - Body ground	Always	10 kΩ or higher
D39-29 (RC0) - Body ground	Always	10 kΩ or higher

NG → **REPAIR OR REPLACE HARNESS OR CONNECTOR**

OK

DL

2 INSPECT CERTIFICATION ECU

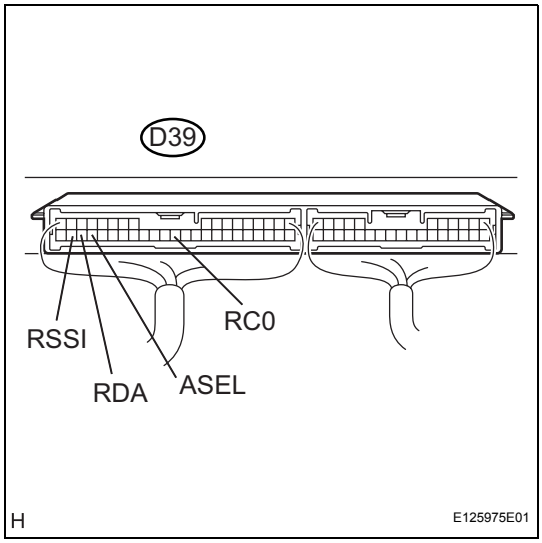

(a) Reconnect the D39 ECU connector.
(b) Measure the voltage according to the value(s) in the table below.

Voltage

Tester Connection	Condition	Specified Condition
D39-37 (ASEL) - Body ground	Engine switch OFF, luggage compartment door OPEN → CLOSE.	Below 1 V → 4.6 to 5.4 V
D39-39 (RSSI) - Body ground	Engine switch OFF, all doors closed, the key is not in the action area. → the key in the action area.	0 to 6 V → Below 1 V
D39-38 (RDA) - Body ground	Engine switch OFF, all doors closed and key switch OFF → ON	Below 1 V → 4.6 to 5.4 V
D39-29 (RC0) - Body ground	Engine switch OFF, all doors closed and key switch OFF → ON	Below 1 V → 4.6 to 5.4 V

NG → REPLACE CERTIFICATION ECU

OK

3 CHECK WIRE HARNESS (TUNER - LUGGAGE COMPARTMENT TUNER)

Luggage Compartment Tuner:

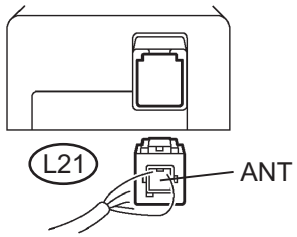

(a) Disconnect the L21 tuner connector.

Tuner:

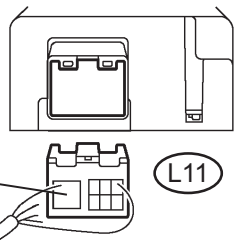

(b) Measure the resistance according to the value(s) in the table below.

Resistance

Tester Connection	Condition	Specified Condition
L11-7 (ANT) - L21-1 (ANT)	Always	Below 1 Ω
L11-7 (ANT) - Body ground	Always	10 kΩ or higher

Result

Result	Proceed to
OK (When troubleshooting according to the PROBLEM SYMPTOMS TABLE)	A
OK (When troubleshooting according to the DLC chart)	B

Result	Proceed to
NG	C

B → PROCEED TO NEXT CIRCUIT INSPECTION SHOWN IN PROBLEM SYMPTOMS TABLE

C → REPAIR OR REPLACE HARNESS OR CONNECTOR

A

4 REPLACE TUNER (RECONFIRM DTC)

(a) Replace the tuner.
(b) Clear the DTC and repeat the procedure to re-check it (See page DL-170).
OK:
DTC is output.

OK → END (TUNER IS DEFECTIVE)

NG

5 REPLACE LUGGAGE COMPARTMENT TUNER (RECONFIRM DTC)

(a) Replace the luggage compartment tuner.
(b) Clear the DTC and repeat the procedure to re-check it (See page DL-170).
OK:
DTC is not output.

OK → END (LUGGAGE COMPARTMENT TUNER IS DEFECTIVE)

NG

REPLACE CERTIFICATION ECU

DTC	B2784	Antenna Coil Open / Short

DESCRIPTION

- Operating the engine switch starts the engine or changes the power source status (ACC / IG / OFF / START).
- The engine switch is a momentary type switch which turns on only while the switch is held down. The certification ECU always stores the power source status (OFF / ACC / ON). If the battery has been removed and reinstalled, the power source status before removal is restored.
- The transponder amplifier is built into the engine switch.

DTC No.	DTC Detection Condition	Trouble Area
B2784	If the certification ECU detects an open or short circuit in the transponder amplifier built into the engine switch, this DTC is stored.	• Engine Switch • Wire harness • Certification ECU

DL

WIRING DIAGRAM

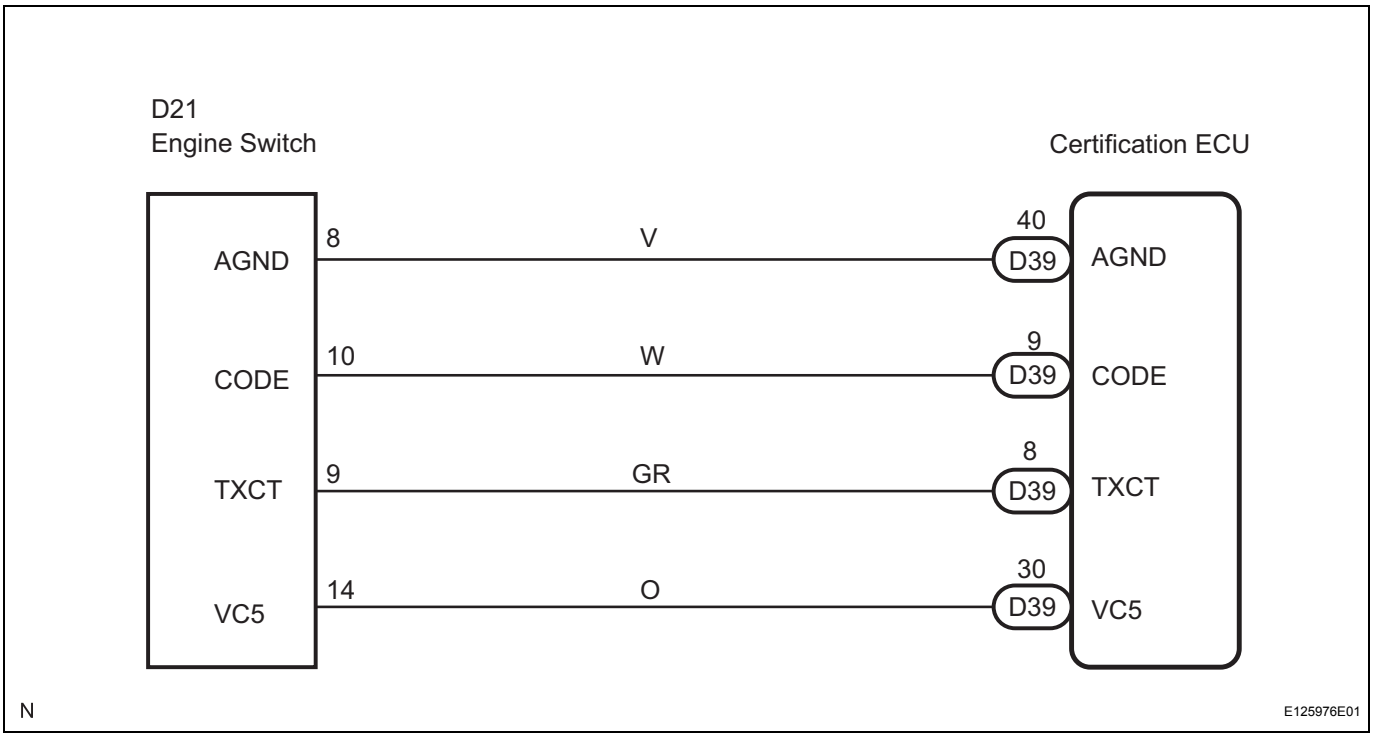

INSPECTION PROCEDURE

1	RECONFIRM DTC

(a) Clear the DTC and repeat the procedure to re-check it (See page DL-170).
OK:
DTC is not output.

OK	END (SYSTEM IS NORMAL)

NG

2	CHECK WIRE HARNESS (CERTIFICATION ECU - ENGINE SWITCH)

Certification ECU:

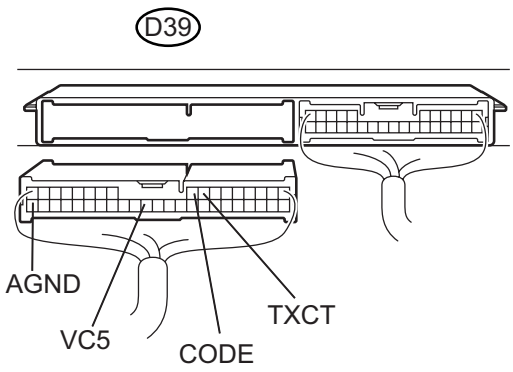

(a) Disconnect the D39 ECU connector.

Engine Switch Wire Harness Side:

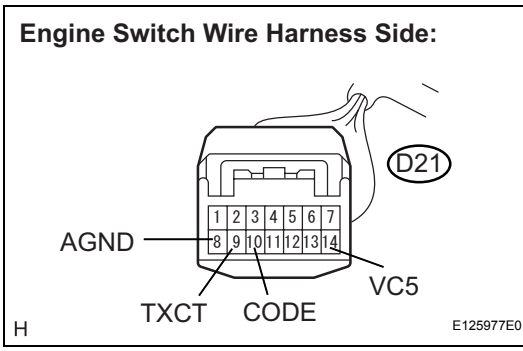

(b) Disconnect the D21 switch connector.
(c) Measure the resistance according to the value(s) in the table below.

Resistance

Tester Connection	Condition	Specified Condition
D39-8 (TXCT) - D21-9 (TXCT)	Always	Below 1 Ω
D39-9 (CODE) - D21-10 (CODE)	Always	Below 1 Ω
D39-30 (VC5) - D21-14 (VC5)	Always	Below 1 Ω
D39-40 (AGND) - D21-8 (AGND)	Always	Below 1 Ω
D39-8 (TXCT) - Body ground	Always	10 kΩ or higher
D39-9 (CODE) - Body ground	Always	10 kΩ or higher
D39-30 (VC5) - Body ground	Always	10 kΩ or higher
D39-40 (AGND) - Body ground	Always	10 kΩ or higher

NG → **REPAIR OR REPLACE HARNESS OR CONNECTOR**

OK

3	REPLACE ENGINE SWITCH (CHECK OPERATION OF ENGINE SWITCH)

(a) Replace the engine switch.
(b) Clear the DTC and repeat the procedure to re-check it (See page DL-170).

OK:

DTC is not output.

OK → END (ENGINE SWITCH IS DEFECTIVE)

NG

REPLACE CERTIFICATION ECU

DTC	B2785	Communication Malfunction between ECUs Connected by LIN

DESCRIPTION

The smart key system uses the LIN communication line for communication. LIN communication sends and receives signals by serial communication, and connects with CAN and multiplex communication via the gateway ECU.

The LIN communication bus directly uses battery power. It consists of a single wire which only uses the transceiver and pull-up resistance of the open-collector.

DTC No.	DTC Detection Condition	Trouble Area
B2785	If the certification ECU detects that transmission and reception on the LIN communication line are impossible for a certain period of time, this DTC is stored.	• Wire harness • Steering lock actuator (Steering lock ECU) • ID code box • Power source control ECU • Certification ECU

DL

WIRING DIAGRAM

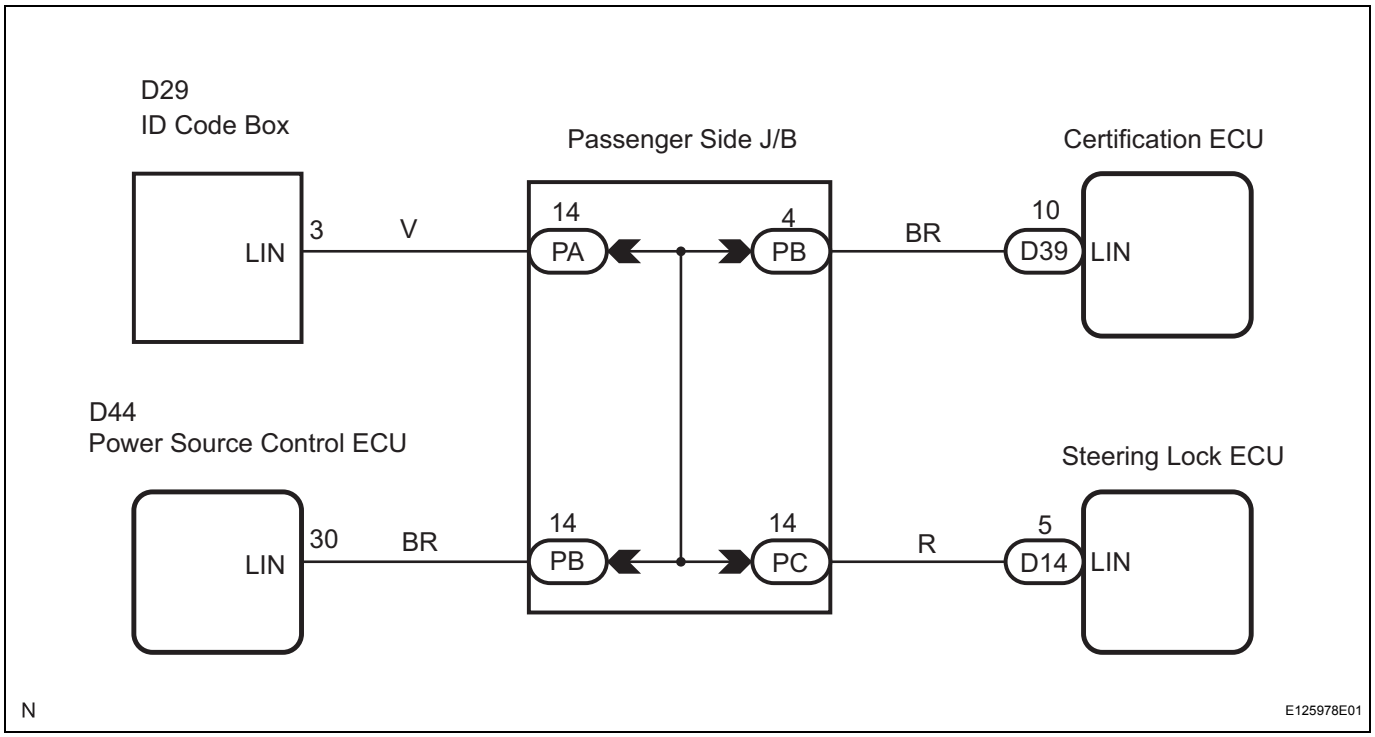

INSPECTION PROCEDURE

1	RECONFIRM DTC

(a) Clear the DTC and repeat the procedure to re-check it (See page DL-170).

OK:

DTC is not output.

OK	END (SYSTEM IS NORMAL)

NG

2	CHECK WIRE HARNESS (CERTIFICATION ECU - ID CODE BOX - POWER SOURCE CONTROL ECU)

Certification ECU:

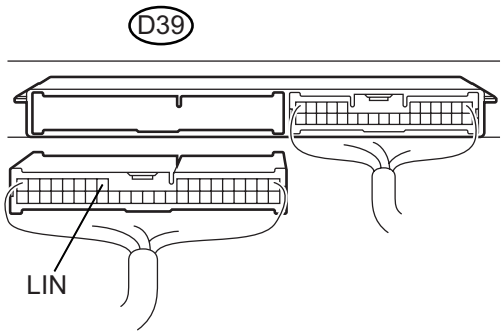

ID Code Box:

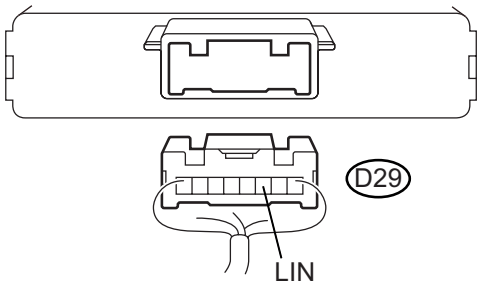

Power Sourcce Control ECU:

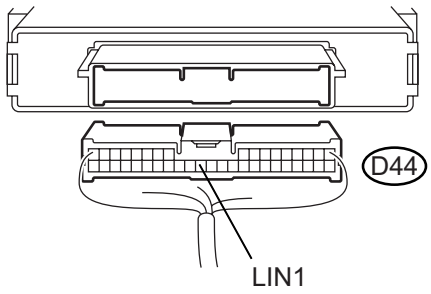

Steering Lock ECU:

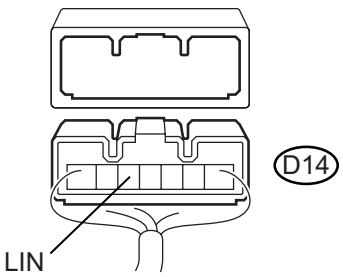

E125979E01

(a) Disconnect the D14, D39 and D44 ECU connectors.
(b) Disconnect the D29 ID code box connector.
(c) Measure the resistance according to the value(s) in the table below.

Resistance

Tester Connection	Condition	Specified Condition
D14-5 (LIN) - D29-3 (LIN)	Always	Below 1 Ω
D14-5 (LIN) - D44-30 (LIN1)	Always	Below 1 Ω
D14-5 (LIN) - D39-10 (LIN)	Always	Below 1 Ω
D14-5 (LIN) - Body ground	Always	10 kΩ or higher

DL

NG	REPAIR OR REPLACE HARNESS OR CONNECTOR

OK

3	REPLACE CERTIFICATION ECU (CHECK OPERATION OF CERTIFICATION ECU)

(a) Replace the certification ECU.
(b) Clear the DTC and repeat the procedure to re-check it (See page DL-170).
OK:
DTC is not output.

OK → **END (CERTIFICATION ECU IS DEFECTIVE)**

NG

4	REPLACE POWER SOURCE CONTROL ECU (CHECK OPERATION OF POWER SOURCE CONTROL ECU)

(a) Replace the power source control ECU.
(b) Clear the DTC and repeat the procedure to re-check it (See page DL-170).
OK:
DTC is not output.

OK → **END (POWER SOURCE CONTROL ECU IS DEFECTIVE)**

NG

5	REPLACE STEERING LOCK ECU (CHECK OPERATION OF STEERING LOCK ECU)

(a) Replace the steering lock ECU.
(b) Clear the DTC and repeat the procedure to re-check it (See page DL-170).
OK:
DTC is not output.

OK → **END (STEERING LOCK ECU IS DEFECTIVE)**

NG

REPLACE ID CODE BOX

DTC	B2786	No Response from Steering Lock ECU

DESCRIPTION

DTC No.	DTC Detection Condition	Trouble Area
B2786	If the certification ECU cannot receive any message from the steering lock ECU via the LIN communication line for 10 seconds, this DTC is stored.	• Wire harness • Steering lock actuator (Steering lock ECU) • Certification ECU

WIRING DIAGRAM

See page DL-189.

INSPECTION PROCEDURE

1	RECONFIRM DTC

(a) Clear the DTC and repeat the procedure to re-check it (See page DL-170).

OK:

DTC is not output.

OK → **END (SYSTEM IS NORMAL)**

NG

2	CHECK WIRE HARNESS (CERTIFICATION ECU - STEERING LOCK ECU)

Certification ECU:

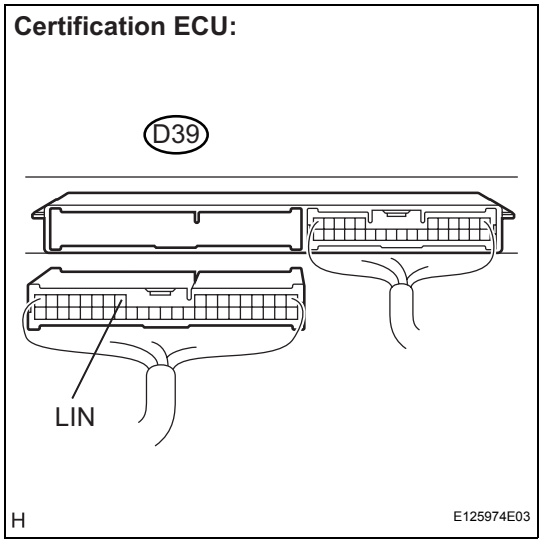

(a) Disconnect the D39 ECU connector.

Steering Lock ECU:

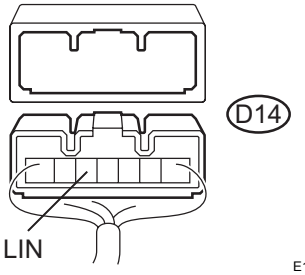

(b) Disconnect the D14 ECU connector.
(c) Measure the resistance according to the value(s) in the table below.

Resistance

Tester Connection	Condition	Specified Condition
D14-5 (LIN) - D39-10 (LIN)	Always	Below 1 Ω
D14-5 (LIN) - Body ground	Always	10 kΩ or higher

NG → **REPAIR OR REPLACE HARNESS OR CONNECTOR**

OK

DL

3	REPLACE CERTIFICATION ECU (CHECK OPERATION OF CERTIFICATION ECU)

(a) Replace the certification ECU.
(b) Clear the DTC and repeat the procedure to re-check it (See page DL-170).

OK:

DTC is not output.

OK → **END (CERTIFICATION ECU IS DEFECTIVE)**

NG

REPLACE STEERING LOCK ECU

DTC	B2789	No Response from ID BOX

DESCRIPTION

DTC No.	DTC Detection Condition	Trouble Area
B2789	If the certification ECU cannot receive any message from the ID code box via the LIN communication line for 10 seconds, this DTC is stored.	• Wire harness • ID code box • Certification ECU

WIRING DIAGRAM

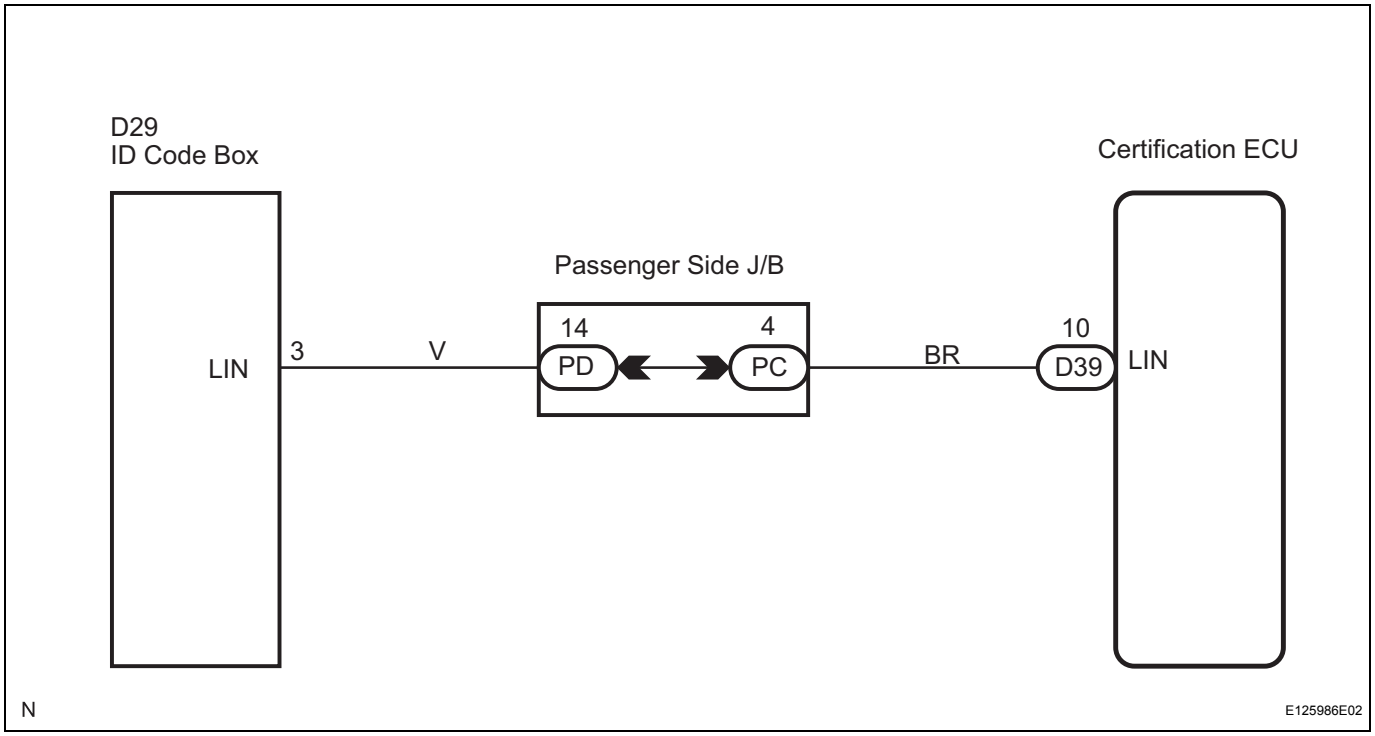

DL

INSPECTION PROCEDURE

1	RECONFIRM DTC

(a) Clear the DTC and repeat the procedure to re-check it (See page DL-170).
OK:
DTC is not output.

OK	END (SYSTEM IS NORMAL)

NG

2	CHECK WIRE HARNESS (CERTIFICATION ECU - ID CODE BOX)

Certification ECU:

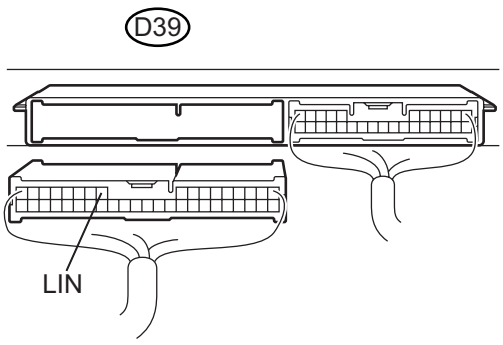

(a) Disconnect the D39 ECU connector.

ID Code Box:

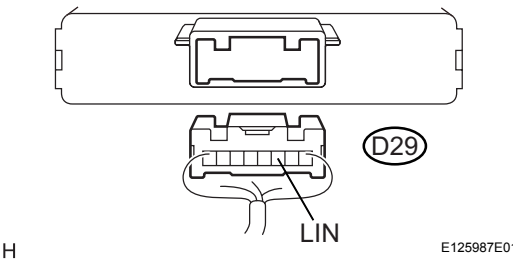

(b) Disconnect the D29 ECU connector.
(c) Measure the resistance according to the value(s) in the table below.

Resistance

Tester Connection	Condition	Specified Condition
D29-3 (LIN) - D39-10 (LIN)	Always	Below 1 Ω
D29-3 (LIN) - Body ground	Always	10 kΩ or higher

NG → **REPAIR OR REPLACE HARNESS OR CONNECTOR**

OK

3	REPLACE CERTIFICATION ECU (CHECK OPERATION OF CERTIFICATION ECU)

(a) Replace the certification ECU.
(b) Clear the DTC and repeat the procedure to re-check it (See page DL-170).

OK:

DTC is not output.

OK → **END (CERTIFICATION ECU IS DEFECTIVE)**

NG

REPLACE ID CODE BOX

DTC	B278A	Short to GND in Immobiliser System Power Source Circuit

DESCRIPTION

- Operating the engine switch starts the engine or changes the power source status (ACC / IG / OFF / START).
- The engine switch is a momentary type switch which turns on only while the switch is held down. The certification ECU always stores the power source status (OFF / ACC / ON). If the battery has been removed and reinstalled, the power source status maintained before removal is restored.
- The transponder amplifier is built into the engine switch.

DTC No.	DTC Detection Condition	Trouble Area
B278A	If the certification ECU detects an open or short circuit in the power supply line (terminal VC5) to the transponder amplifier built into the engine switch, this DTC is stored.	• Wire harness • Engine switch • Certification ECU

DL

WIRING DIAGRAM

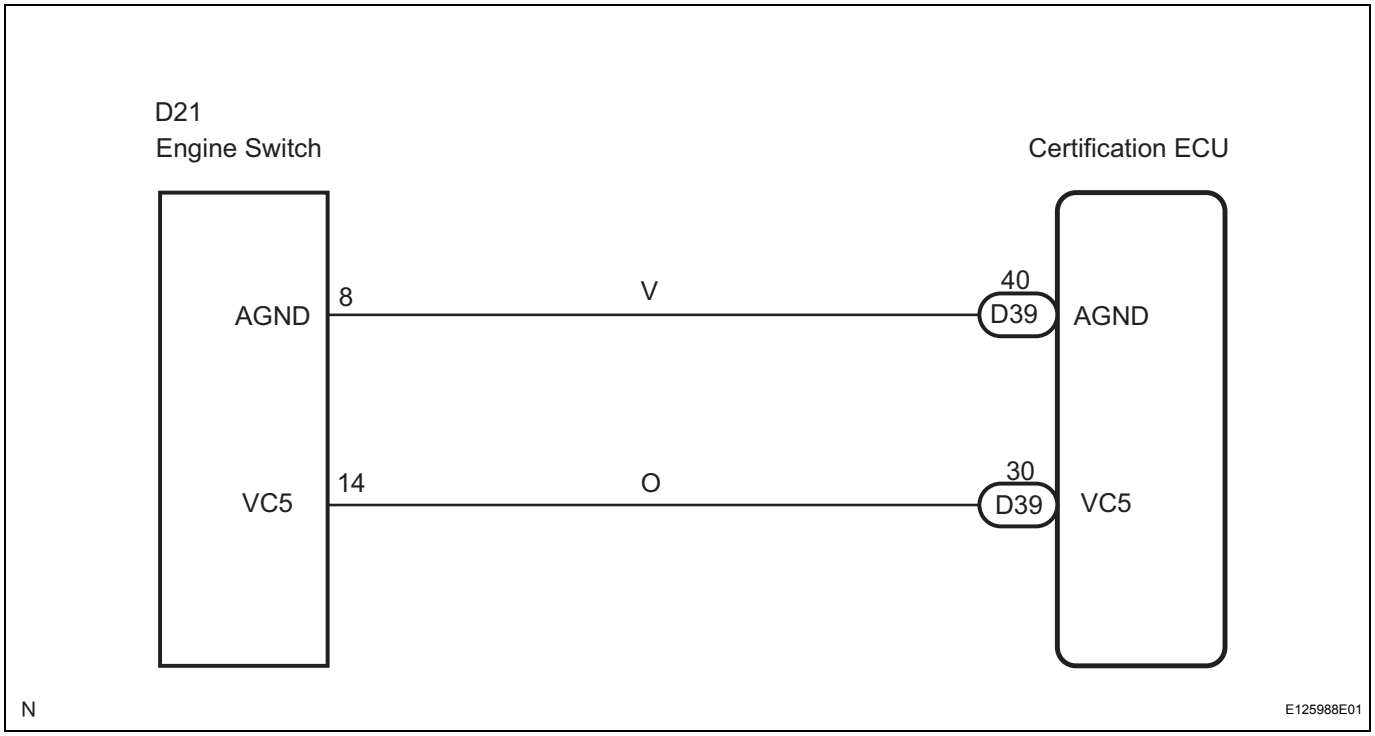

INSPECTION PROCEDURE

1	CHECK WIRE HARNESS (CERTIFICATION ECU - ENGINE SWITCH)

Certification ECU:

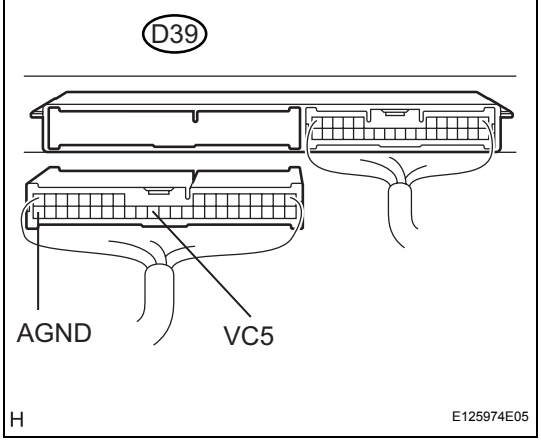

(a) Disconnect the D39 ECU connector.

Engine Switch Wire Harness Side:

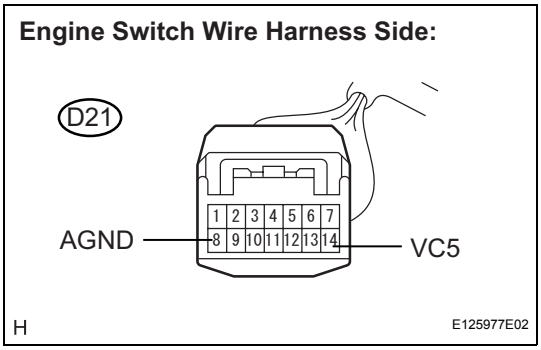

(b) Disconnect the D21 switch connector.
(c) Measure the resistance according to the value(s) in the table below.

Resistance

Tester Connection	Condition	Specified Condition
D39-30 (VC5) - D21-14 (VC5)	Always	Below 1 Ω
D39-40 (AGND) - D21-8 (AGND)	Always	Below 1 Ω
D39-30 (VC5) - Body ground	Always	10 kΩ or higher
D39-40 (AGND) - Body ground	Always	10 kΩ or higher

NG → **REPAIR OR REPLACE HARNESS OR CONNECTOR**

OK

2	REPLACE ENGINE SWITCH (RECONFIRM DTC)

(a) Replace the engine switch.
(b) Clear the DTC and repeat the procedure to re-check it (See page DL-170).

OK:

DTC is not output.

OK → **END (ENGINE SWITCH IS DEFECTIVE)**

NG

REPLACE CERTIFICATION ECU

DTC	B2790	ID BOX EEPROM Malfunction

DESCRIPTION

This DTC indicates an ID code box internal malfunction. If this DTC is detected, replacement of the ID code box is required.

DTC No.	DTC Detection Condition	Trouble Area
B2790	If the certification ECU detects an ID code box internal malfunction, this DTC is stored.	ID code box

INSPECTION PROCEDURE

1	REPLACE ID CODE BOX

NEXT

END

DTC	B2791	Communication Condition Failure between ECM

DESCRIPTION

- If the ID code box receives a verification request signal from the ECM, it sends back verification information obtained from the certification ECU or steering lock ECU via the LIN communication line to the ECM.
- The ID code box sends immobilizer SET / UNSET signals to the ECM based on the information received from the certification ECU via the LIN communication line.

HINT:

- If the engine switch is turned off immediately after engine start, this DTC is also stored.
- If this DTC is detected, check if any other DTCs such as B2799 are output.

DTC No.	DTC Detection Condition	Trouble Area
B2791	If the ID code box does not respond to a verification request signal from the ECM, the certification ECU detects this DTC.	• Wire harness • ID code box • ECM

WIRING DIAGRAM

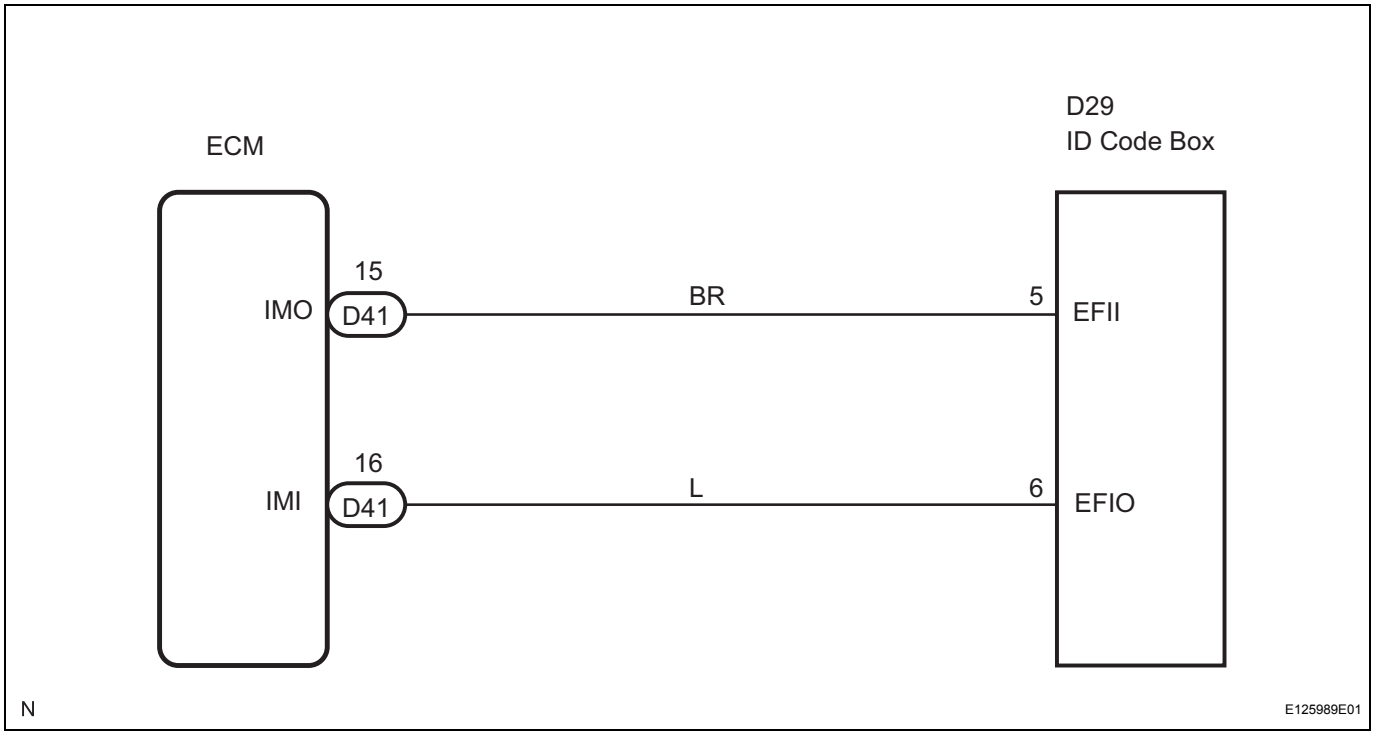

INSPECTION PROCEDURE

1	CHECK OPERATION OF ID CODE BOX

(a) Check that the engine switch can be turned on (IG) and the engine starts.

OK:

Engine switch can be turned on (IG) and the engine starts.

OK	END (SYSTEM IS NORMAL)

NG

CHECK THE OTHER DTC

DTC	B2799	Communication with Immobiliser

DESCRIPTION

- If the ID code box receives a verification request signal from the ECM, it sends back verification information obtained from the certification ECU or steering lock ECU via the LIN communication line to the ECM.
- The ID code box sends immobilizer SET / UNSET signals to the ECM based on the information received from the certification ECU via the LIN communication line.

DTC No.	DTC Detection Condition	Trouble Area
B2799	If either of the following conditions is met, this DTC is stored in the ECM: • The ID code box does not respond to a verification request signal from the ECM. • The ID code box responds with a wrong code to a verification request signal.	• Wire harness • ID code box • ECM

DL

WIRING DIAGRAM

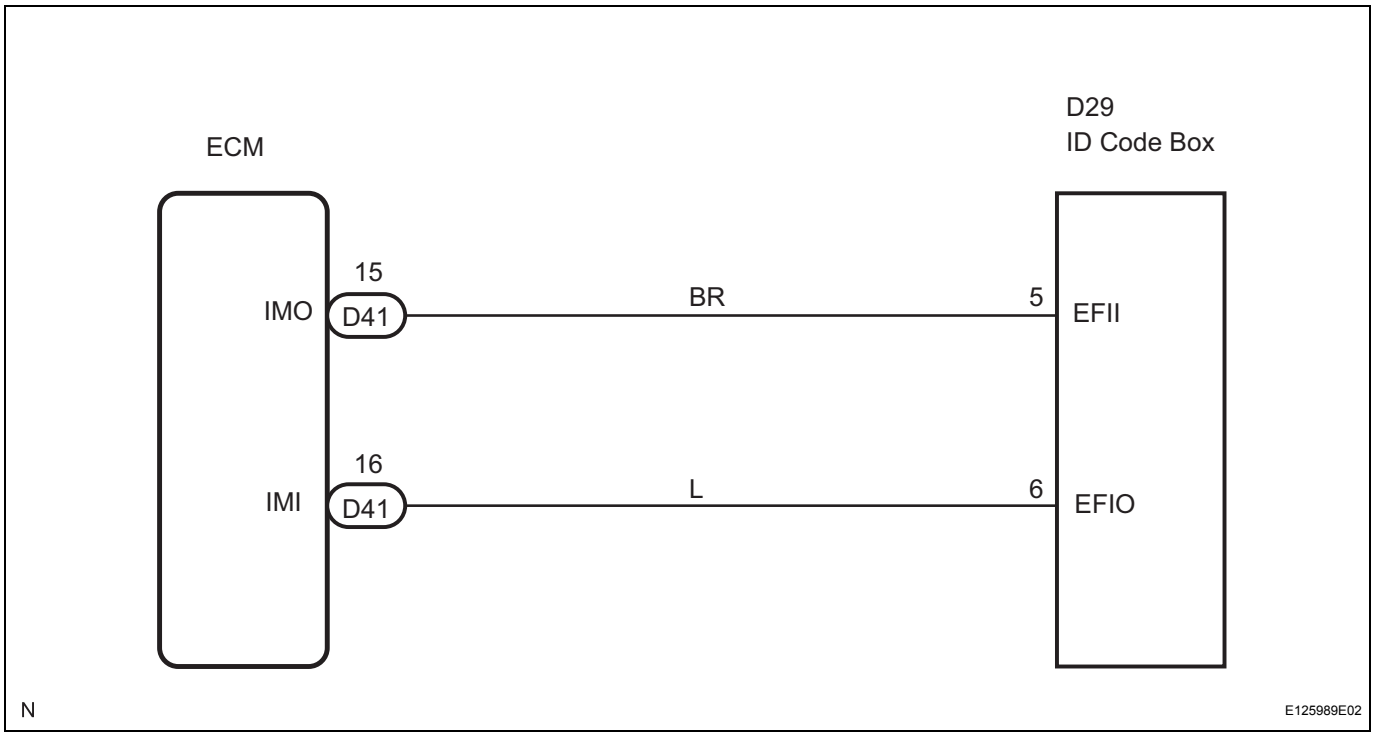

INSPECTION PROCEDURE

1	CHECK OPERATION OF ID CODE BOX

(a) Check that the engine switch can be turned on (IG) and the engine starts.

OK:

Engine switch can be turned on (IG) and the engine starts.

OK	END (SYSTEM IS NORMAL)

NG

2 CHECK WIRE HARNESS (ECM - ID CODE BOX)

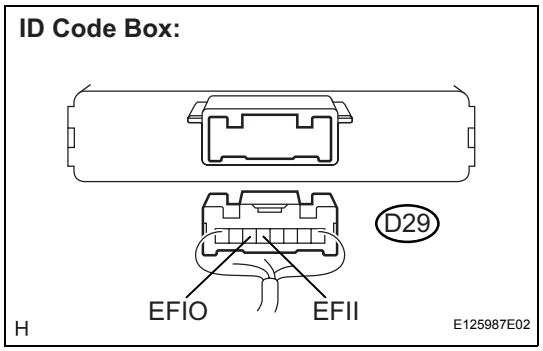

(a) Disconnect the D29 ECU connector.

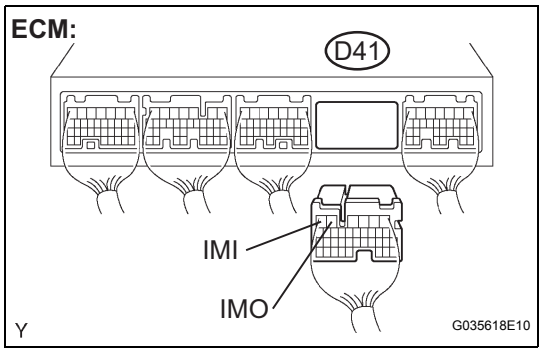

(b) Disconnect the D41 ECM connector.
(c) Measure the resistance according to the value(s) in the table below.

Resistance

Tester Connection	Condition	Specified Condition
D29-5 (EFII) - D41-15 (IMO)	Always	Below 1 Ω
D29-6 (EFIO) - D41-16 (IMI)	Always	Below 1 Ω
D29-5 (EFII) - Body ground	Always	10 kΩ or higher
D29-6 (EFIO) - Body ground	Always	10 kΩ or higher

NG → REPAIR OR REPLACE HARNESS OR CONNECTOR

OK

3 ECU CODE REGISTRATION

(a) ECU code registration (See page DL-150).
(b) Check that the engine switch can be turned on (IG) and the engine starts.

OK:

Engine switch can be turned on (IG) and the engine starts.

OK → END (ECU REGISTRATION ID DEFECTIVE)

NG

4 REPLACE ECM (CHECK OPERATION OF ECM)

(a) Replace the ECM.
(b) Clear the DTC and repeat the procedure to re-check it (See page DL-170).

OK:
DTC is not output.

OK → **END (ECM IS DEFECTIVE)**

NG

REPLACE ID CODE BOX

Warning Light Circuit

DESCRIPTION

- The key warning indicator light, which is built into the combination meter, comes on or blinks as a warning to the driver.
- The certification ECU sends key warning indicator light on / blink request signals to the combination meter via BEAN.

HINT:
If the key warning indicator light does not come on or blink properly, there may be a problem in the power source of the multiplex communication system and combination meter or in the certification ECU.

INSPECTION PROCEDURE

1	**GO TO MULTIPLEX COMMUNICATION SYSTEM**

NEXT

END

Door Oscillator Circuit

DESCRIPTION

Door oscillators are built into each door. Each of them forms its own action area around its door and detects the presence of the key.

WIRING DIAGRAM

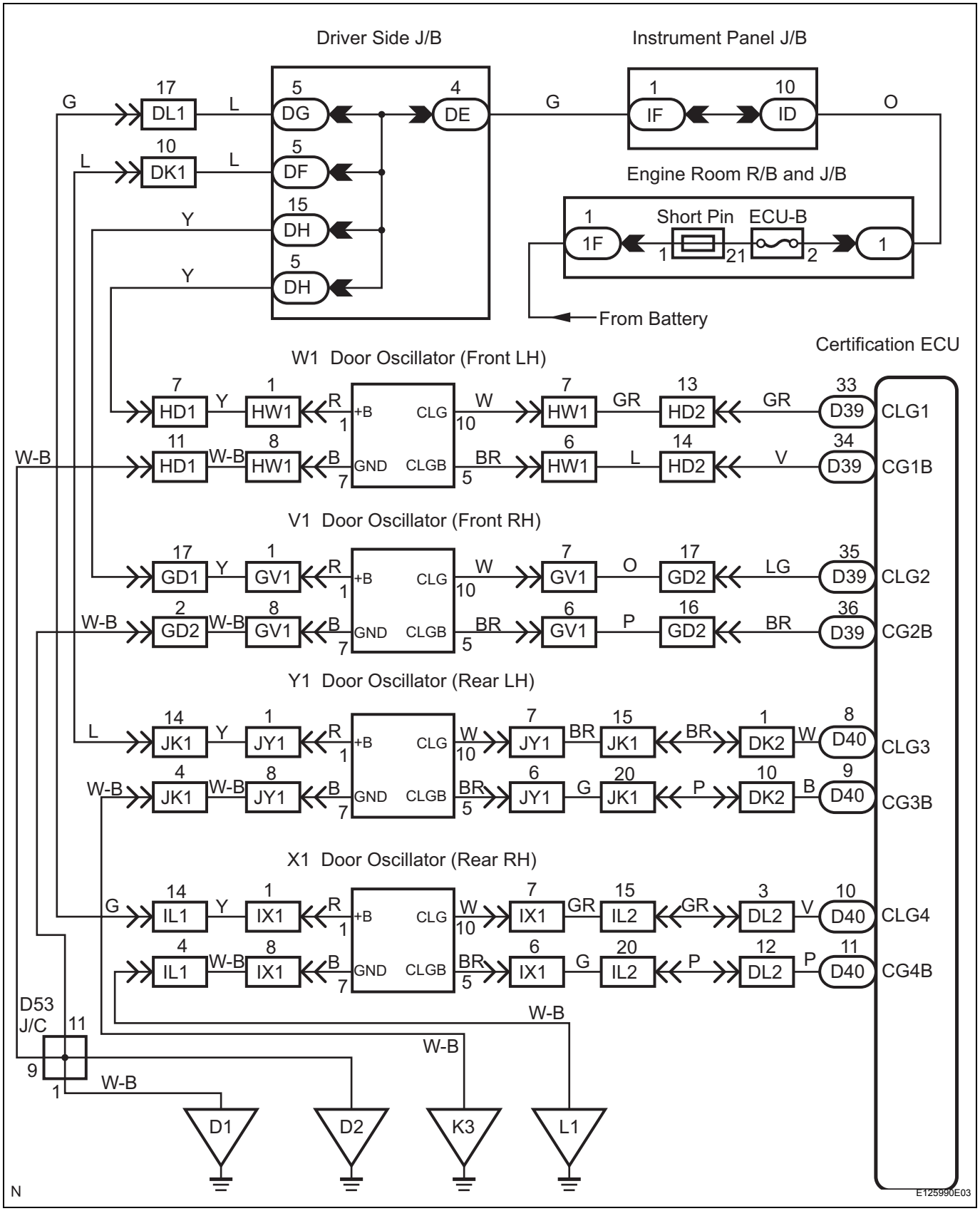

INSPECTION PROCEDURE

1	INSPECT DOOR OSCILLATOR

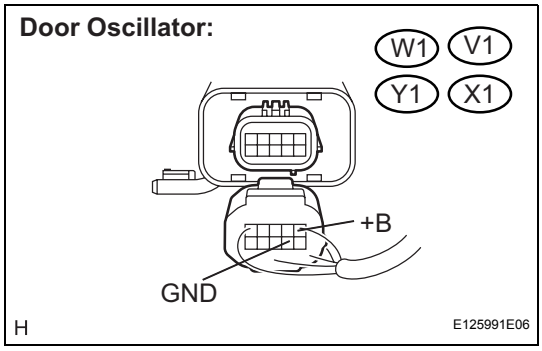

(a) Disconnect the oscillator connectors.
(b) Measure the voltage according to the value(s) in the table below.

Voltage:

Front LH side

Tester Connection	Condition	Specified Condition
W1-1 (+B) - W1-7 (GND)	Always	10 to 14 V

Front RH side

Tester Connection	Condition	Specified Condition
V1-1 (+B) - V1-7 (GND)	Always	10 to 14 V

Rear LH side

Tester Connection	Condition	Specified Condition
Y1-1 (+B) - Y1-7 (GND)	Always	10 to 14 V

Rear RH side

Tester Connection	Condition	Specified Condition
X1-1 (+B) - X1-7 (GND)	Always	10 to 14 V

NG → **REPAIR OR REPLACE HARNESS AND CONNECTOR**

OK

2	CHECK WIRE HARNESS (DOOR ELECTRICAL KEY OSCILLATOR - DOOR ECU)

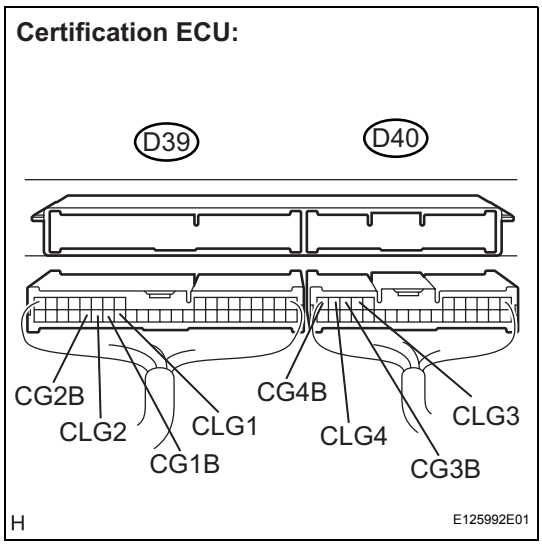

(a) Disconnect the D39 and D40 ECU connector.

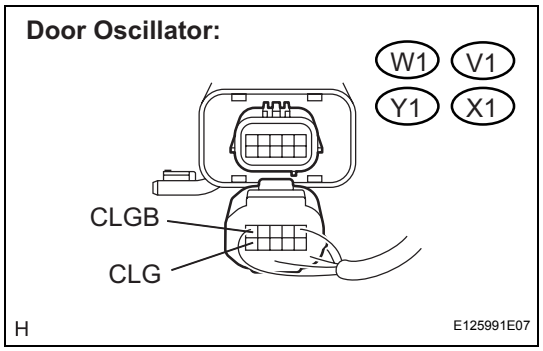

(b) Measure the resistance between the oscillator and the certification ECU to check for an open circuit in the wire harness.
Resistance:
Below 1 Ω

(c) Measure the resistance between the oscillator and the certification ECU to check for an short circuit in the wire harness.
Resistance:
10 kΩ or higher
HINT:
Refer to the wiring diagram for connection of each terminal.

NG → **REPAIR OR REPLACE HARNESS AND CONNECTOR**

OK

DL

3 PERFORM ACTIVE TEST BY INTELLIGENT TESTER (CERTIFICATION ECU OUTPUT SIGNAL)

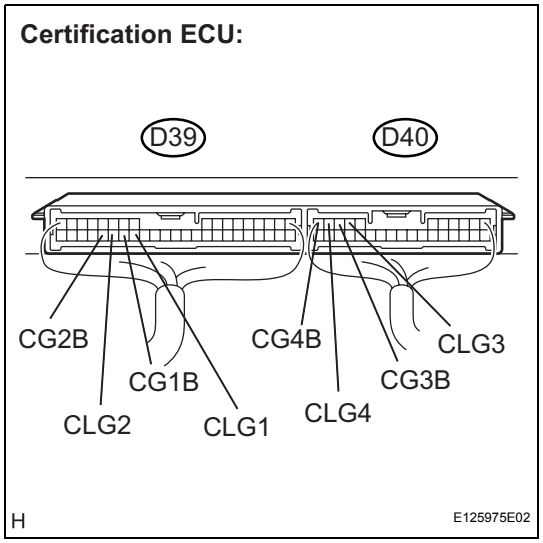

(a) Reconnect the ECU and the oscillator connectors.
(b) Connect the intelligent tester to the DLC3.
(c) Turn the engine switch on (IG).
(d) Following the display on the tester, select the "ACTIVE TEST".
Certification ECU:

Item	Vehicle Condition / Test Details
D TRANSMITTER	Door Oscillator ON / OFF
P TRANSMITTER	Door Oscillator ON / OFF

(e) Measure the frequency according to the value(s) in the table below.
OK

Tester Connection	Condition	Specified Condition
D39-33 (CLG1) - D39-34 (CG1B)	During ACTIVE TEST	Frequency is generated (higher than 0 Hz)
D39-35 (CLG2) - D39-36 (CG2B)	During ACTIVE TEST	Frequency is generated (higher than 0 Hz)
D40-8 (CLG3) - D40-9 (CG3B)	During ACTIVE TEST	Frequency is generated (higher than 0 Hz)
D40-10 (CLG4) - D40-11 (CG4B)	During ACTIVE TEST	Frequency is generated (higher than 0 Hz)

OK → **PROCEED TO NEXT CIRCUIT INSPECTION SHOWN IN PROBLEM SYMPTOMS TABLE**

NG

4 REPLACE DOOR OSCILLATOR (CHECK OPERATION OF DOOR OSCILLATOR)

(a) Replace the door oscillator.

(b) Check that the entry LOCK / UNLOCK function operates normally.
OK:
Entry LOCK / UNLOCK function operates normally.

NG → **PROCEED TO NEXT CIRCUIT INSPECTION SHOWN IN PROBLEM SYMPTOMS TABLE**

OK

END (DOOR OSCILLATOR IS DEFECTIVE)

Touch Sensor Circuit

DESCRIPTION

This circuit receives the signal indicating whether or not a touch sensor signal is detected.

WIRING DIAGRAM

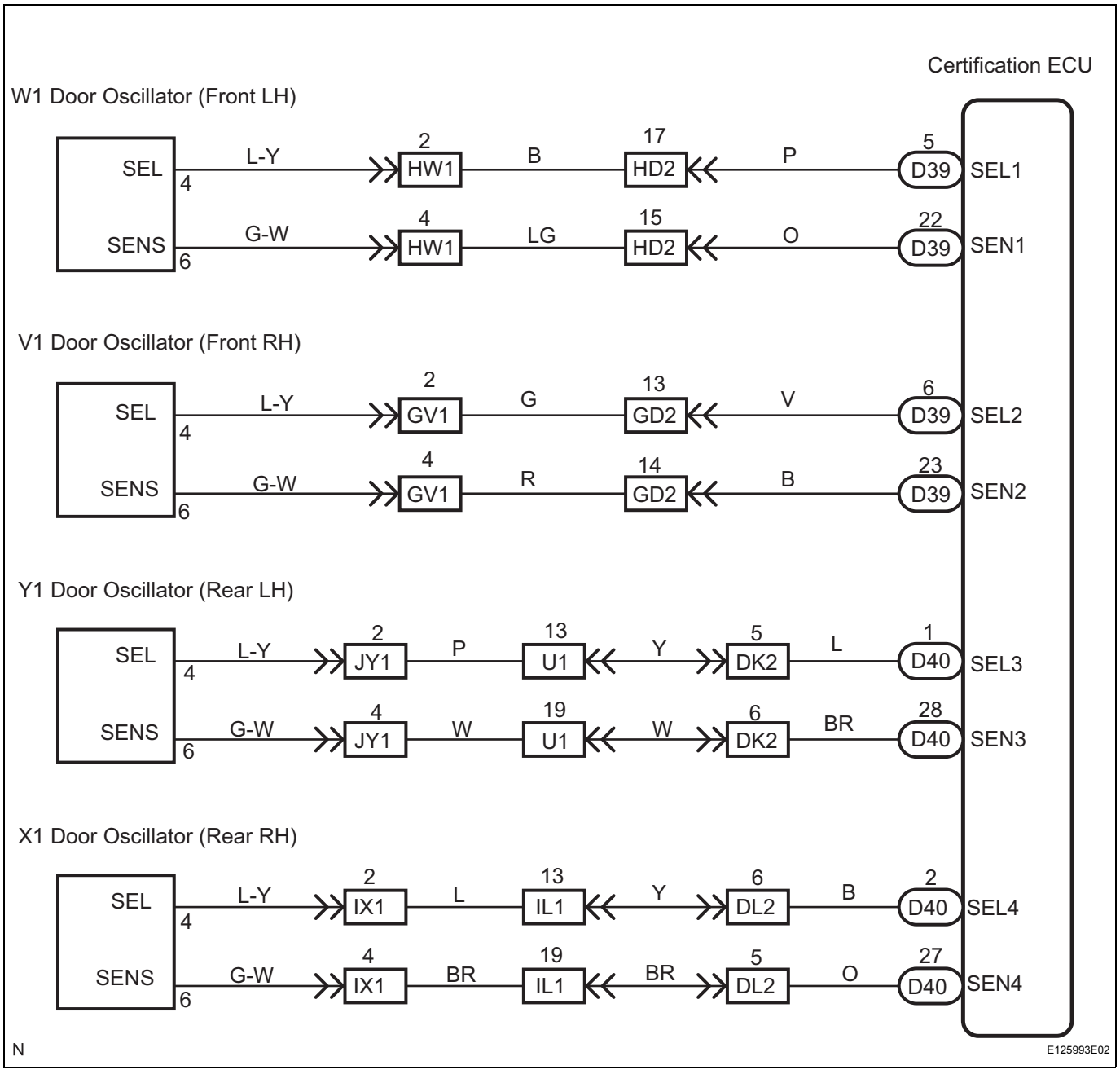

INSPECTION PROCEDURE

1	READ VALUE ON INTELLIGENT TESTER

(a) Connect the intelligent tester to the DLC3.
(b) Turn the engine switch on (IG).

(c) Following the display on the tester, select "DATA LIST".

SMART KEY (Certification ECU):

Item	Measurement Item / Range (Display)	Normal Condition	Diagnostic Note
D TOUCH SENSOR	Status of touch sensor front LH / ON or OFF	ON: Touch sensor is touched OFF: Touch sensor is not touched	-
P TOUCH SENSOR	Status of touch sensor front RH / ON or OFF	ON: Touch sensor is touched OFF: Touch sensor is not touched	-
DR TOUCH SENSOR	Status of touch sensor rear LH / ON or OFF	ON: Touch sensor is touched OFF: Touch sensor does not touched	-
DP TOUCH SENSOR	Status of touch sensor rear RH / ON or OFF	ON: Touch sensor is touched OFF: Touch sensor does not touched	-

OK:
"ON" (screen is touched) appears on the tester screen.

DL

OK → **PROCEED TO NEXT CIRCUIT INSPECTION SHOWN IN PROBLEM SYMPTOMS TABLE**

NG

2 CHECK WIRE HARNESS (CERTIFICATION ECU - DOOR OSCILLATOR)

Certification ECU:

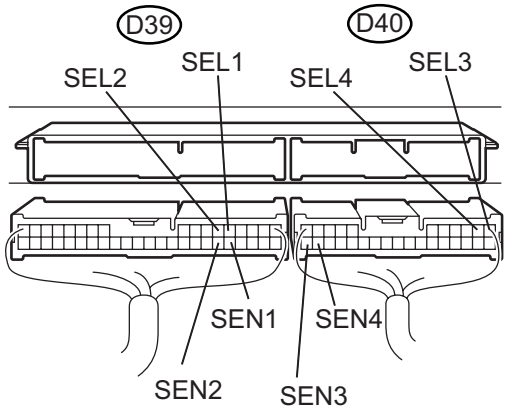

(a) Disconnect the D39 and D40 ECU connector.

Door Oscillator:

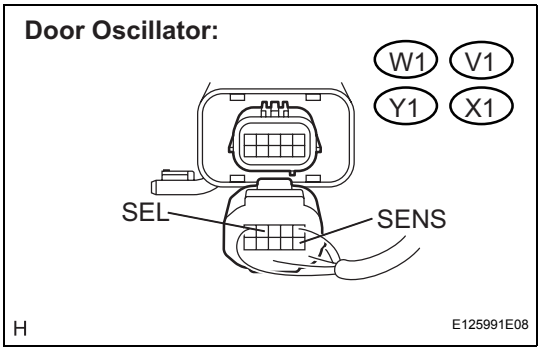

(b) Disconnect the oscillator connectors.

(c) Measure the resistance between the oscillator and the certification ECU to check for an open circuit in the wire harness.
Resistance:
Below 1 Ω

(d) Measure the resistance between the oscillator and the certification ECU to check for an short circuit in the wire harness.
Resistance:
10 kΩ or higher
HINT:
Refer to the wiring diagram for connection of each terminal.

NG → REPAIR OR REPLACE HARNESS OR CONNECTOR

OK

3 INSPECT CERTIFICATION ECU

Certification ECU:

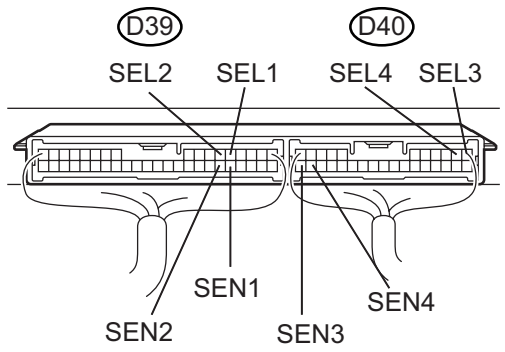

H E125975E03

(a) Reconnect the ECU and the oscillator connectors.
(b) Connect the intelligent tester to the DLC3.
(c) Turn the engine switch on (IG).
(d) Measure the voltage according to the value(s) in the table below.

Voltage

Tester Connection	Condition	Specified Condition
SEL1 (D39-5) - Body ground	Move the key more than 5 m (16.4 ft) away from the front door LH → Bring it to the outside handle	10 to 14 V → Below 1 V
SEL2 (D39-6) - Body ground	Move the key more than 5 m (16.4 ft) away from the front door RH → Bring it to the outside handle	10 to 14 V → Below 1 V
SEL3 (D40-1) - Body ground	Move the key more than 5 m (16.4 ft) away from the rear door LH → Bring it to the outside handle	10 to 14 V → Below 1 V
SEL4 (D40-2) - Body ground	Move the key more than 5 m (16.4 ft) away from the rear door RH → Bring it to the outside handle	10 to 14 V → Below 1 V
SEN1 (D39-22) - Body ground	Front door LH outside handle is not held → Front door LH outside handle is held	10 to 14 V → Below 1 V
SEN2 (D39-23) - Body ground	Front door LH outside handle is not held → Front door LH outside handle is held	10 to 14 V → Below 1 V
SEN4 (D40-27) - Body ground	Rear door LH outside handle is not held → Rear door LH outside handle is held	10 to 14 V → Below 1 V
SEN3 (D40-28) - Body ground	Rear door LH outside handle is not held → Rear door LH outside handle is held	10 to 14 V → Below 1 V

OK → PROCEED TO NEXT CIRCUIT INSPECTION SHOWN IN PROBLEM SYMPTOMS TABLE

NG

DL

4	REPLACE DOOR OSCILLATOR (CHECK OPERATION OF DOOR OSCILLATOR)

(a) Replace the door oscillator.
(b) Check that the entry UNLOCK function operates normally.
OK:
Entry UNLOCK function operates normally.

NG → **PROCEED TO NEXT CIRCUIT INSPECTION SHOWN IN PROBLEM SYMPTOMS TABLE**

OK

END (DOOR OSCILLATOR IS DEFECTIVE)

Antenna Circuit

DESCRIPTION

Terminals ANT1 and ANT2 of the antenna (door outside handle) detect if the key is within the action area around the door outside handle.

WIRING DIAGRAM

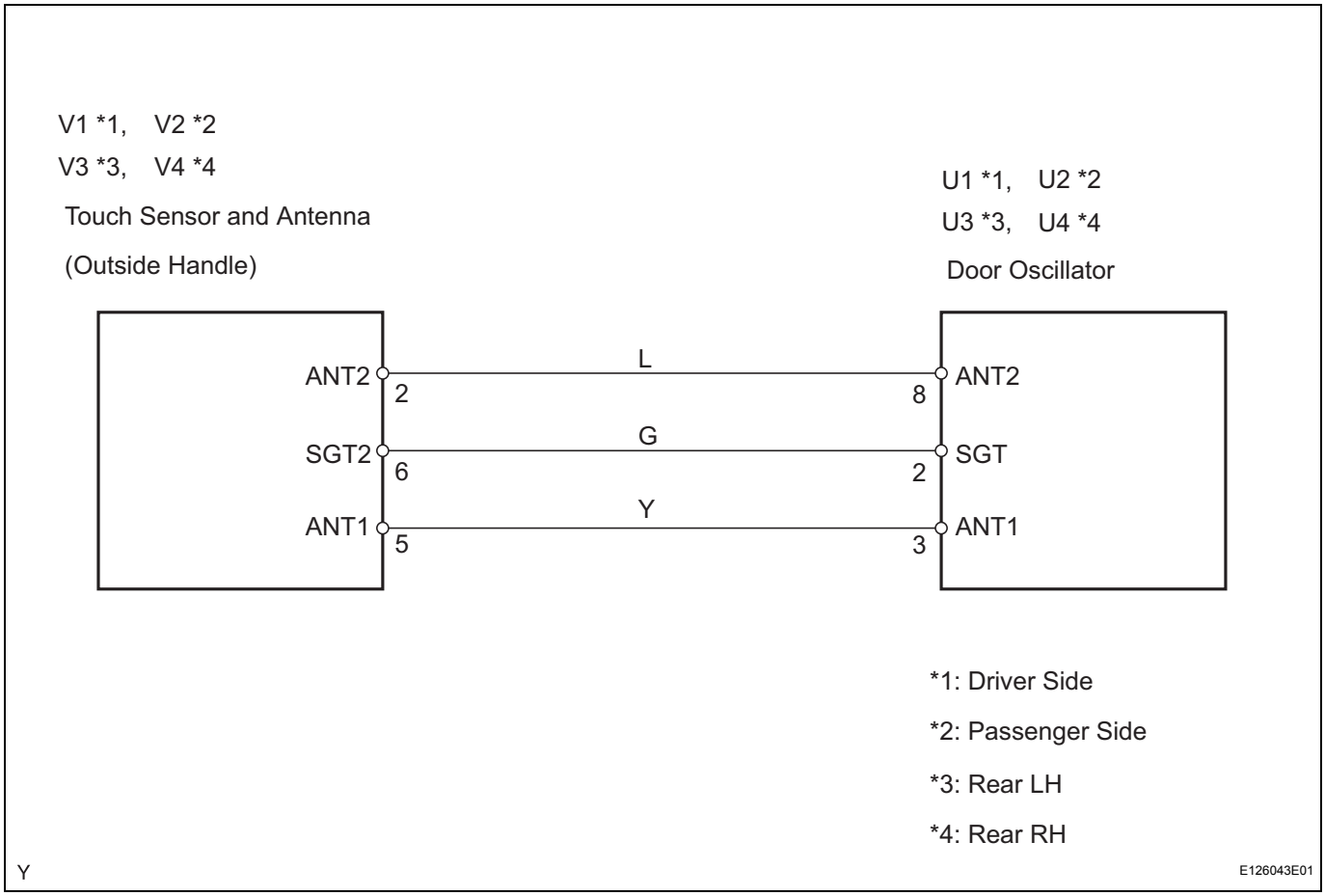

DL

INSPECTION PROCEDURE

1	CHECK WIRE HARNESS (DOOR OSCILLATOR - ANTENNA)

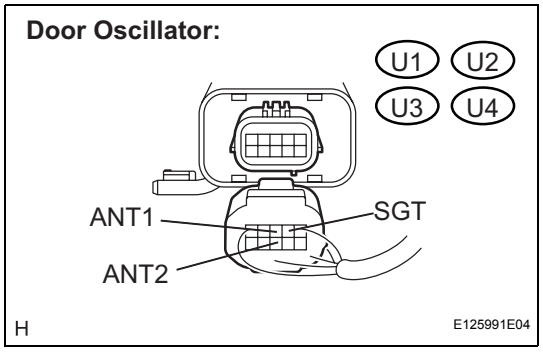

(a) Remove the outside handle.

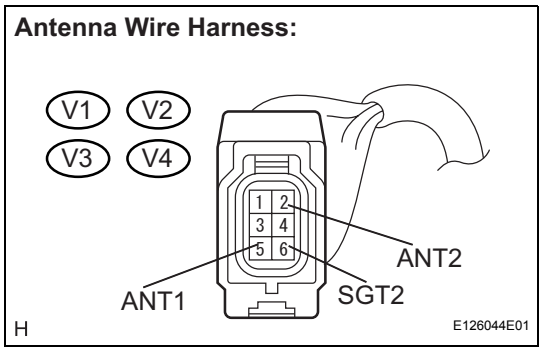

(b) Disconnect the antenna and door oscillator connectors.
(c) Measure the resistance between the oscillator and the antenna to check for an open circuit in the wire harness.
Resistance:
Below 1 Ω
(d) Measure the resistance between the oscillator and the antenna to check for a short circuit in the wire harness.
Resistance:
10 kΩ or higher
HINT:
Refer to the wiring diagram for connection of each terminal.

NG → **REPAIR OR REPLACE HARNESS OR CONNECTOR**

OK

DL

PROCEED TO NEXT CIRCUIT INSPECTION SHOWN IN PROBLEM SYMPTOMS TABLE

Luggage Oscillator Circuit

DESCRIPTION

The certification ECU activates the inner and outer luggage compartment oscillators. The power is supplied from the certification ECU to both the inner and outer luggage compartment oscillators. The inner and outer luggage compartment oscillator circuits have the same wiring. If the entry luggage compartment function has a malfunction, check the circuit for the malfunctioning oscillator.

WIRING DIAGRAM

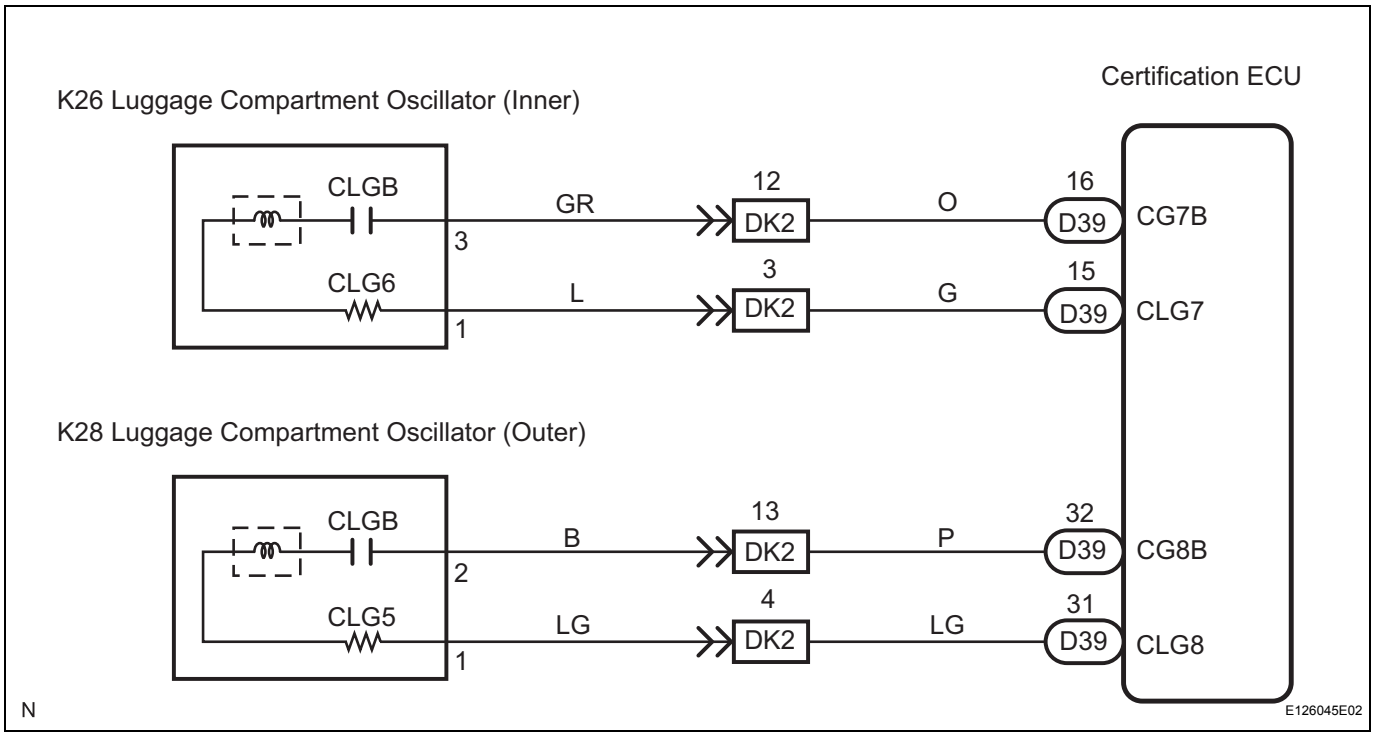

INSPECTION PROCEDURE

1	PERFORM ACTIVE TEST BY INTELLIGENT TESTER (CERTIFICATION ECU - OUTPUT SIGNAL)

Certification ECU:

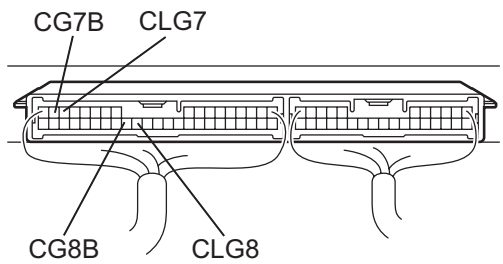

(a) Connect the intelligent tester to the DLC3.
(b) Engine switch ON (IG).
(c) Following the display on the tester, select the "ACTIVE TEST".

Certification ECU:

Item	Vehicle Condition / Test Details
IN-BDR TRNSMTTR	Luggage compartment oscillator (Inner) ON / OFF
BDOOR TRNSMTTR	Luggage compartment oscillator (Outer) ON / OFF

(d) Measure the frequency according to the value(s) in the table below.

OK

Tester Connection	Condition	Specified Condition
CG7B (D39-16) - CLG7 (D39-15)	During ACTIVE TEST	Frequency is generated (higher than 0 Hz)
CG8B (D39-32) - CLG8 (D39-31)	During ACTIVE TEST	Frequency is generated (higher than 0 Hz)

NG → **REPLACE CERTIFICATION ECU**

OK

2 CHECK WIRE HARNESS (CERTIFICATION ECU - LUGGAGE COMPARTMENT OSCILLATOR)

Certification ECU:

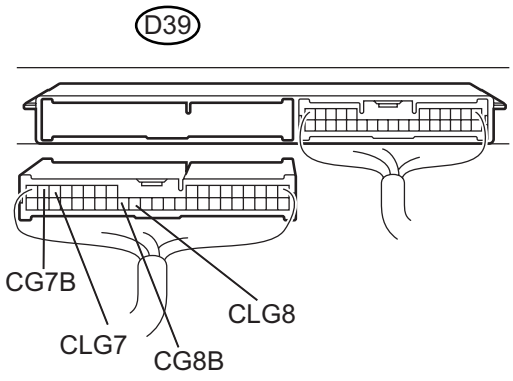

(a) Disconnect the D39 ECU connector.

Oscillator (Inner):

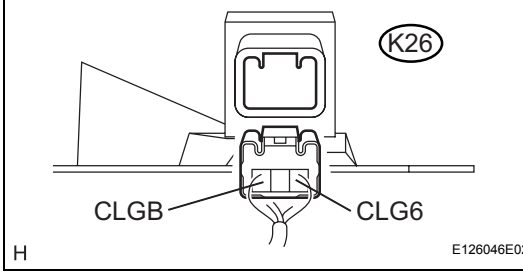

(b) Disconnect the oscillator connectors.

Oscillator (Outer) Wire Harness:

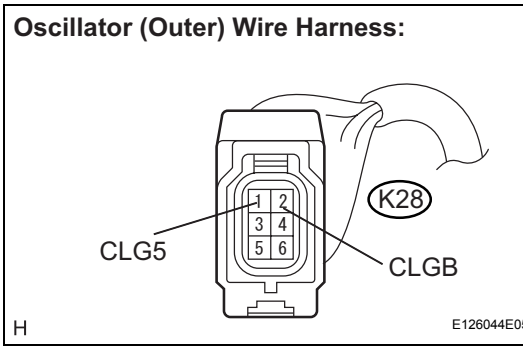

(c) Measure the resistance between the oscillator and the certification ECU to check for an open circuit in the wire harness.
Resistance:
Below 1 Ω

(d) Measure the resistance between the oscillator and the certification ECU to check for an short circuit in the wire harness.
Resistance:
10 kΩ or higher
HINT:
Refer to the wiring diagram for connection of each terminal.

NG → REPAIR OR REPLACE HARNESS OR CONNECTOR

OK

PROCEED TO NEXT CIRCUIT INSPECTION SHOWN IN PROBLEM SYMPTOMS TABLE

Room Oscillator Circuit

DESCRIPTION

The certification ECU activates the front and rear cabin oscillators. The power is supplied from the certification ECU to both the front and rear cabin oscillators. The front and rear cabin oscillator circuits have the same wiring. If the smart key system does not operate properly inside the vehicle, check the circuit for their oscillators.

WIRING DIAGRAM

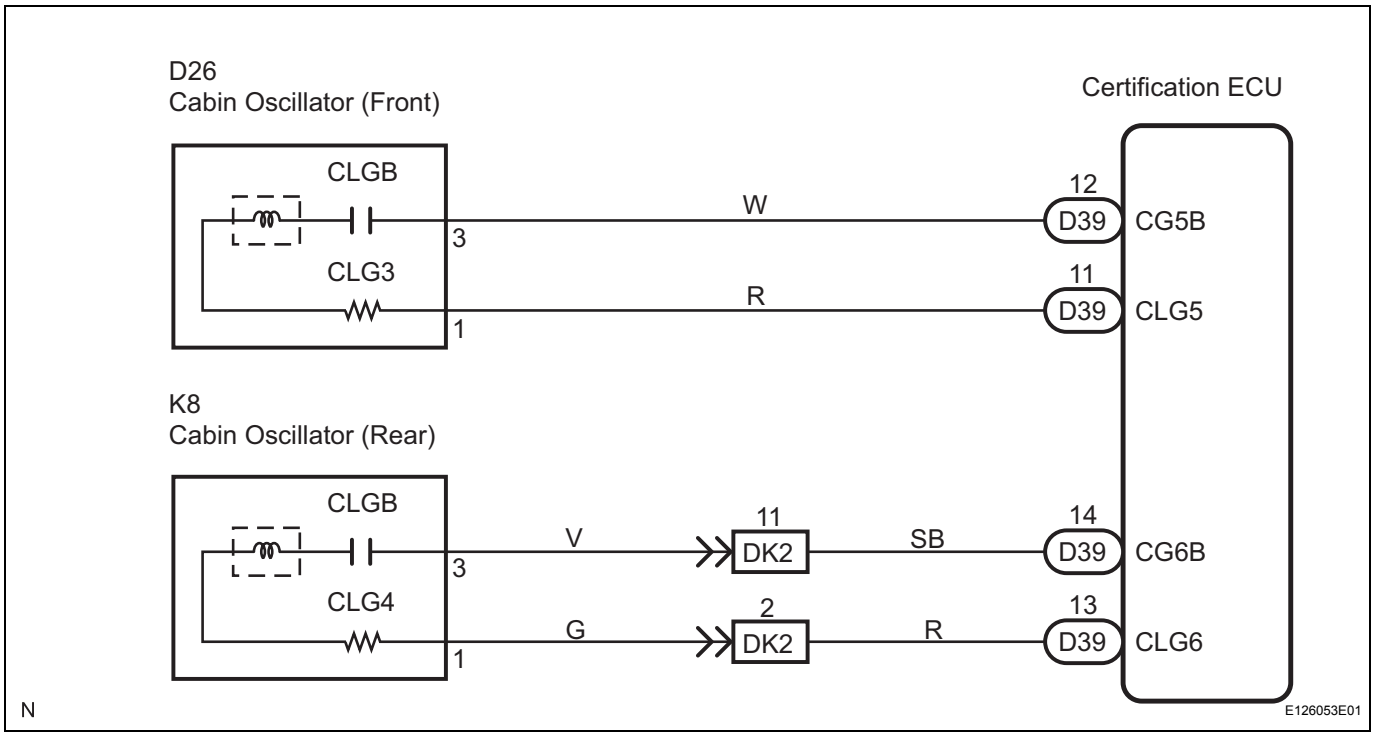

INSPECTION PROCEDURE

1	PERFORM ACTIVE TEST BY INTELLIGENT TESTER (CERTIFICATION ECU - OUTPUT SIGNAL)

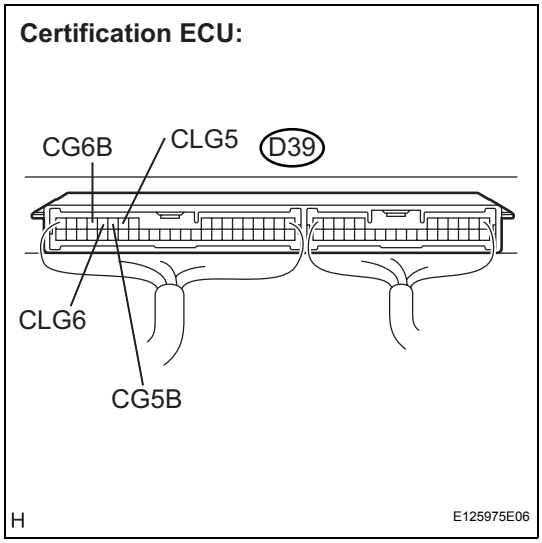

(a) Connect the intelligent tester to the DLC3.
(b) Turn the engine switch on (IG).
(c) Following the display on the tester, select the "ACTIVE TEST".
Certification ECU

Item	Vehicle Condition / Test Details
Fr TRANSMITTER	Cabin Oscillator ON / OFF

(d) Measure the frequency according to the value(s) in the table below.
OK

Tester Connection	Condition	Specified Condition
CG5B (D39-12) - CLG5 (D39-11)	During ACTIVE TEST	Frequency is generated (higher than 0 Hz)
CG6B (D39-14) - CLG6 (D39-13)	During ACTIVE TEST	Frequency is generated (higher than 0 Hz)

NG → REPLACE CERTIFICATION ECU

OK

2	CHECK WIRE HARNESS (CERTIFICATION ECU - CABIN OSCILLATOR)

Certification ECU:

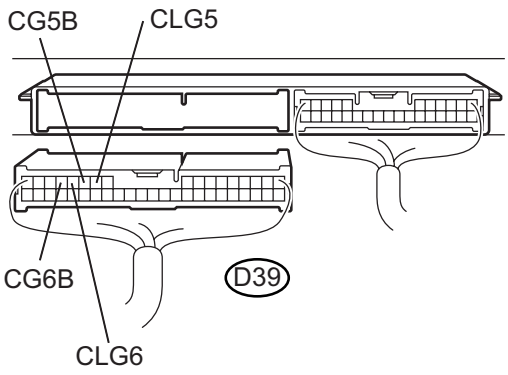

(a) Disconnect the D39 ECU connector.

Oscillator (Front):

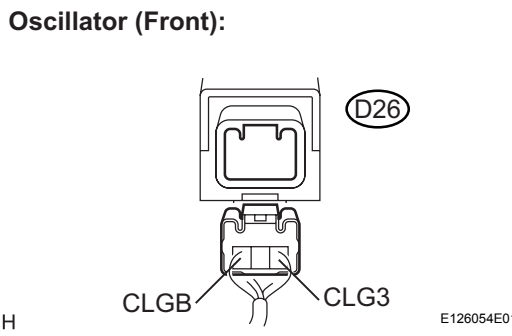

(b) Disconnect the oscillator connectors.

Oscillator (Rear):

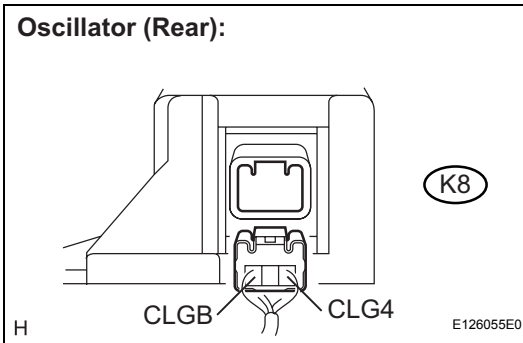

(c) Measure the resistance between the oscillator and the certification ECU to check for an open circuit in the wire harness.
Resistance:
Below 1 Ω

(d) Measure the resistance between the oscillator and the certification ECU to check for an short circuit in the wire harness.
Resistance:
10 kΩ or higher
HINT:
Refer to the wiring diagram for connection of each terminal.

NG → REPAIR OR REPLACE HARNESS OR CONNECTOR

OK

PROCEED TO NEXT CIRCUIT INSPECTION SHOWN IN PROBLEM SYMPTOMS TABLE

Luggage Compartment Door Open Switch Circuit

DESCRIPTION

If the certification ECU detects that the luggage compartment open switch is pressed when the driver is carrying the key or when the key is locked in the luggage compartment door, the certification ECU sends a luggage compartment door open motor drive request signal to the body ECU.

WIRING DIAGRAM

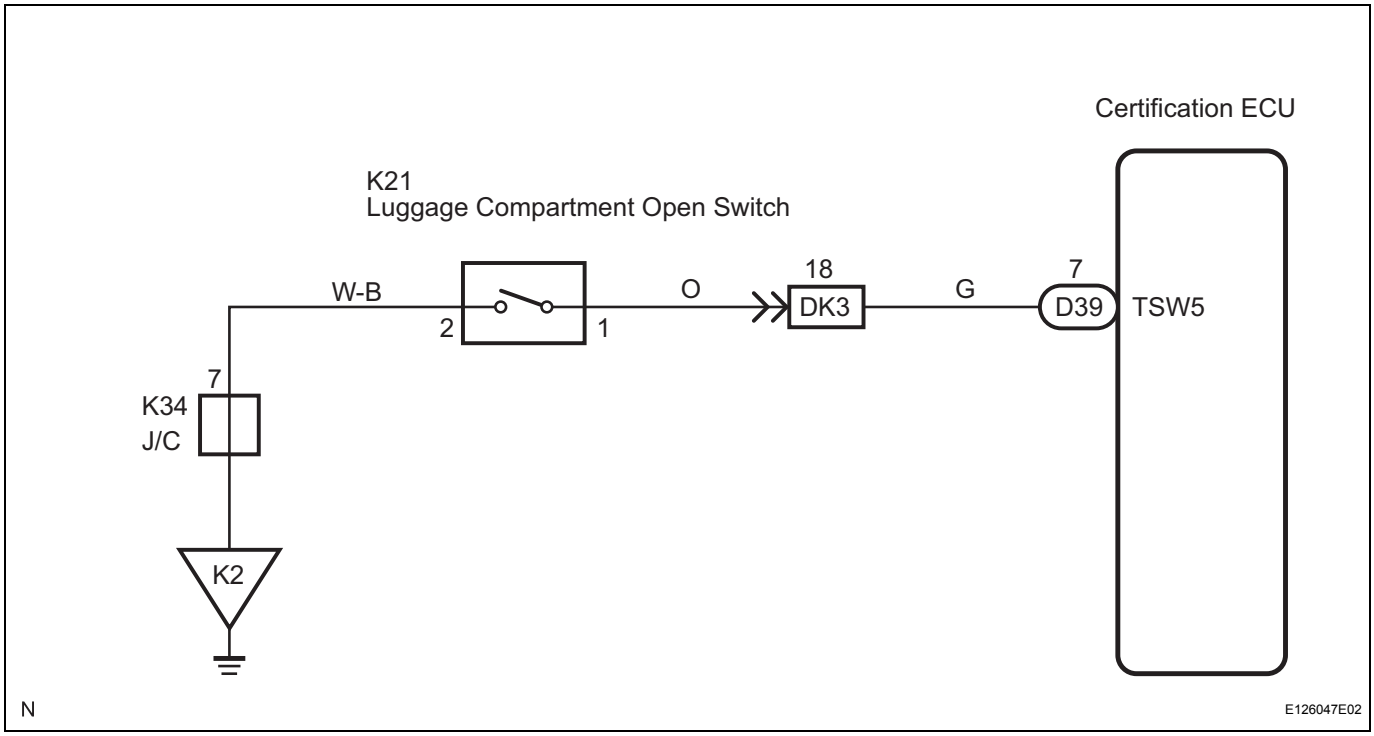

INSPECTION PROCEDURE

1	INSPECT LUGGAGE COMPARTMENT OPEN SWITCH

Luggage Compartment Open Switch:

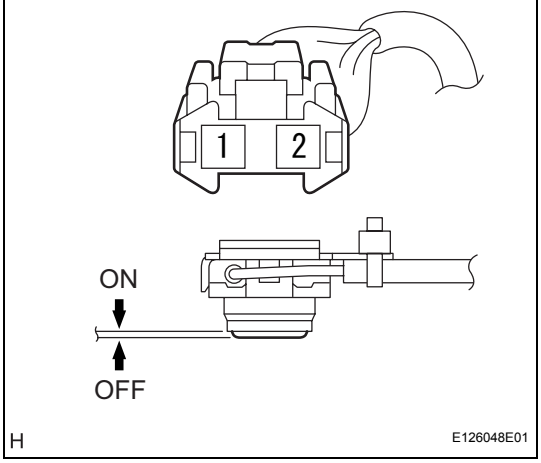

(a) Disconnect the switch connector.
(b) Measure the resistance according to the value(s) in the table below.

Resistance

Tester Connection	Condition	Specified Condition
K21-1 - K21-2	Luggage compartment open switch not pushed → Pushed	10 kΩ or higher → Below 1 Ω

NG → **REPLACE LUGGAGE COMPARTMENT OPEN SWITCH**

OK

2	CHECK WIRE HARNESS (CERTIFICATION ECU - LUGGAGE COMPARTMENT OPEN SWITCH)

Certification ECU:

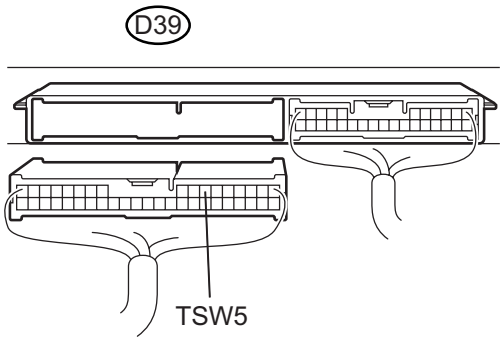

(a) Reconnect the switch connector.
(b) Disconnect the D39 ECU connector.
(c) Measure the resistance according to the value(s) in the table below.

Resistance

Tester Connection	Condition	Specified Condition
TSW5 (D39-7) - Body ground	Luggage compartment open switch not pushed → Pushed	10 kΩ or higher → Below 1 Ω

NG → REPAIR OR REPLACE HARNESS OR CONNECTOR

OK

PROCEED TO NEXT CIRCUIT INSPECTION SHOWN IN PROBLEM SYMPTOMS TABLE

DL

ID Code Box Power Source Circuit

DESCRIPTION

This is the power source circuit of the ID code box.
The ID code box sends immobilizer SET / UNSET signals to the ECM based on the information received from the certification ECU via the LIN communication line.

WIRING DIAGRAM

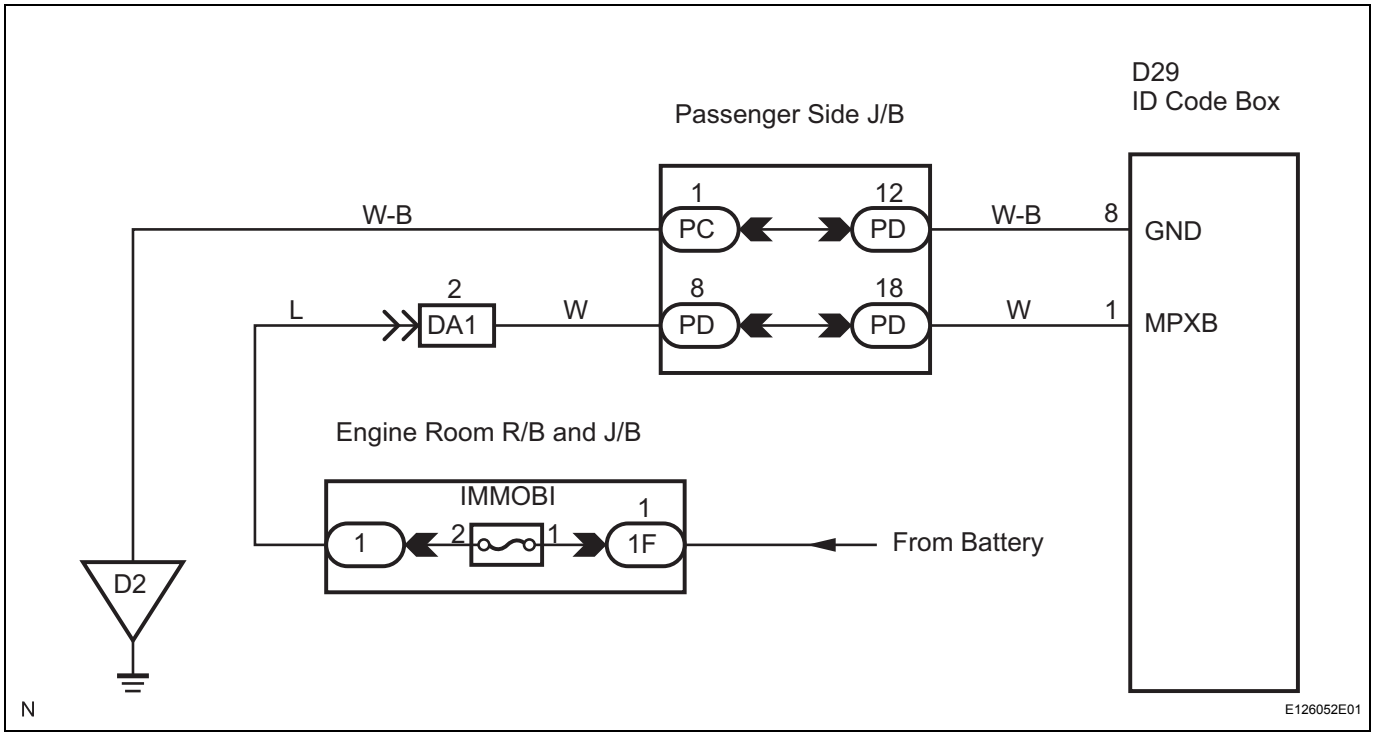

INSPECTION PROCEDURE

1	INSPECT ID CODE BOX

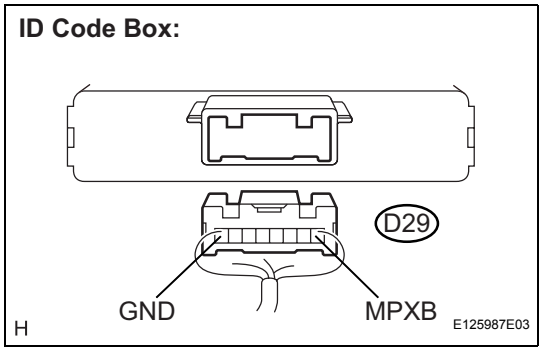

(a) Disconnect the D29 ID code box connector.
(b) Measure the voltage according to the value(s) in the table below.
Voltage

Tester Connection	Condition	Specified Condition
D29-1 (MPXB) - Body ground	Always	10 to 14 V

(c) Measure the resistance according to the value(s) in the table below.
Resistance

Tester Connection	Condition	Specified Condition
D29-8 (GND) - Body ground	Always	Below 1 Ω

NG	REPAIR OR REPLACE HARNESS OR CONNECTOR

OK

PROCEED TO NEXT CIRCUIT INSPECTION SHOWN IN PROBLEM SYMPTOMS TABLE

Certification ECU Power Source Circuit

DESCRIPTION

This is the power source circuit of the certification ECU.
The certification ECU controls the following:

- Key verification confirmation
- Cabin and door oscillator control
- Entry door LOCK / UNLOCK request to the body ECU
- Steering LOCK / UNLOCK request
- Immobilizer SET / UNSET request to the ID code box

WIRING DIAGRAM

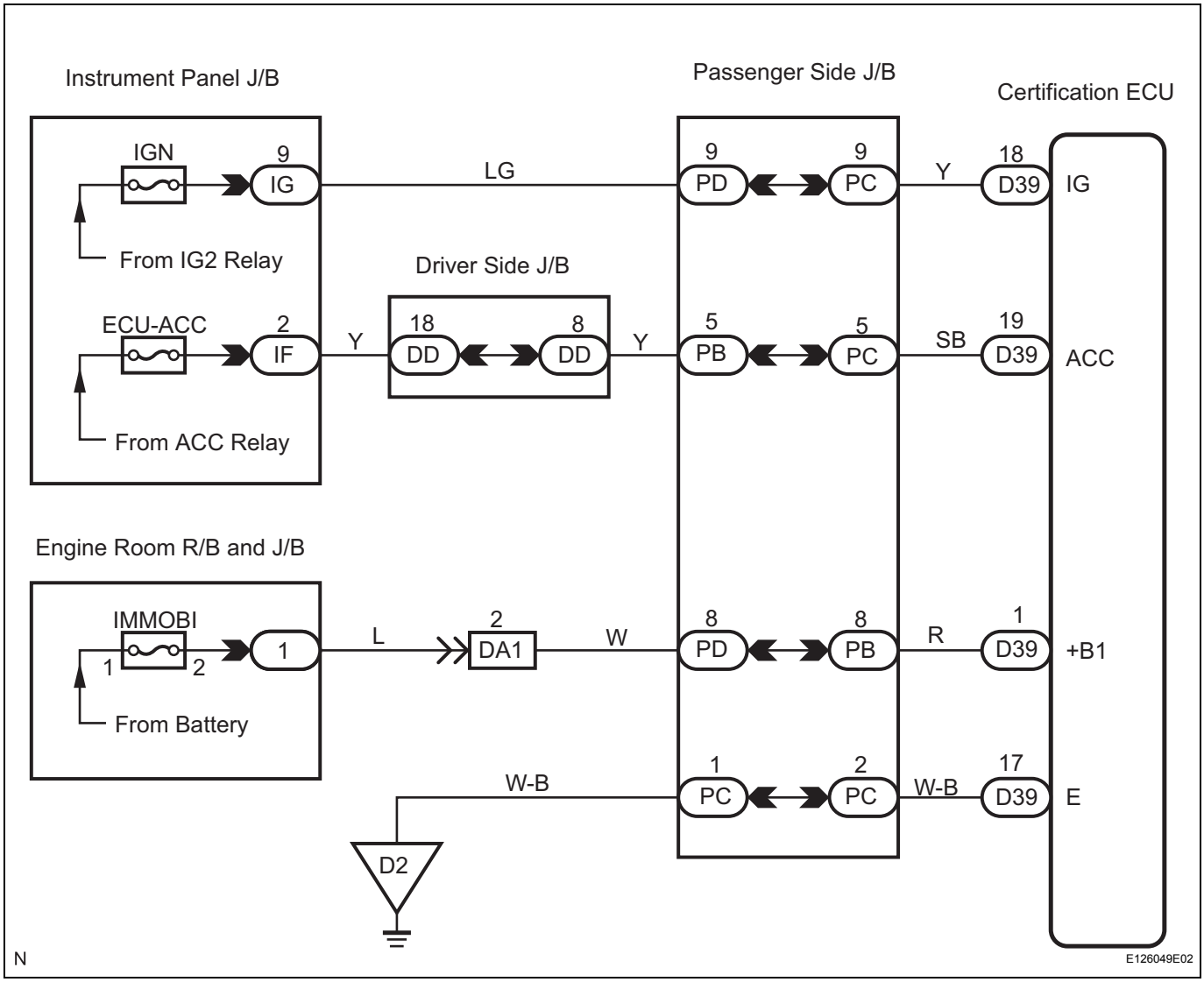

INSPECTION PROCEDURE

1	INSPECT CERTIFICATION ECU

Certification ECU:

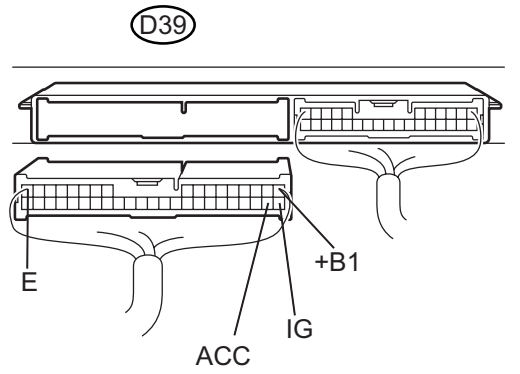

(a) Disconnect the D39 certification ECU connector.
(b) Measure the voltage according to the value(s) in the table below.

Voltage

Tester Connection	Condition	Specified Condition
D39-1 (+B1) - Body ground	Always	10 to 14 V
D39-18 (IG) - Body ground	Engine switch OFF → ON (IG)	Below 1 V → 10 to 14 V
D39-19 (ACC) - Body ground	Engine switch OFF → ON (ACC)	Below 1 V → 10 to 14 V

(c) Measure the resistance according to the value(s) in the table below.

Resistance

Tester Connection	Condition	Specified Condition
D39-17 (E) - Body ground	Always	Below 1 Ω

DL

NG → **REPAIR OR REPLACE HARNESS OR CONNECTOR**

OK

PROCEED TO NEXT CIRCUIT INSPECTION SHOWN IN PROBLEM SYMPTOMS TABLE

Lock Switch Circuit

DESCRIPTION

Lock switches (trigger switch) are built into the outside handles of each door. The certification ECU detects the conditions of the each lock switch.

WIRING DIAGRAM

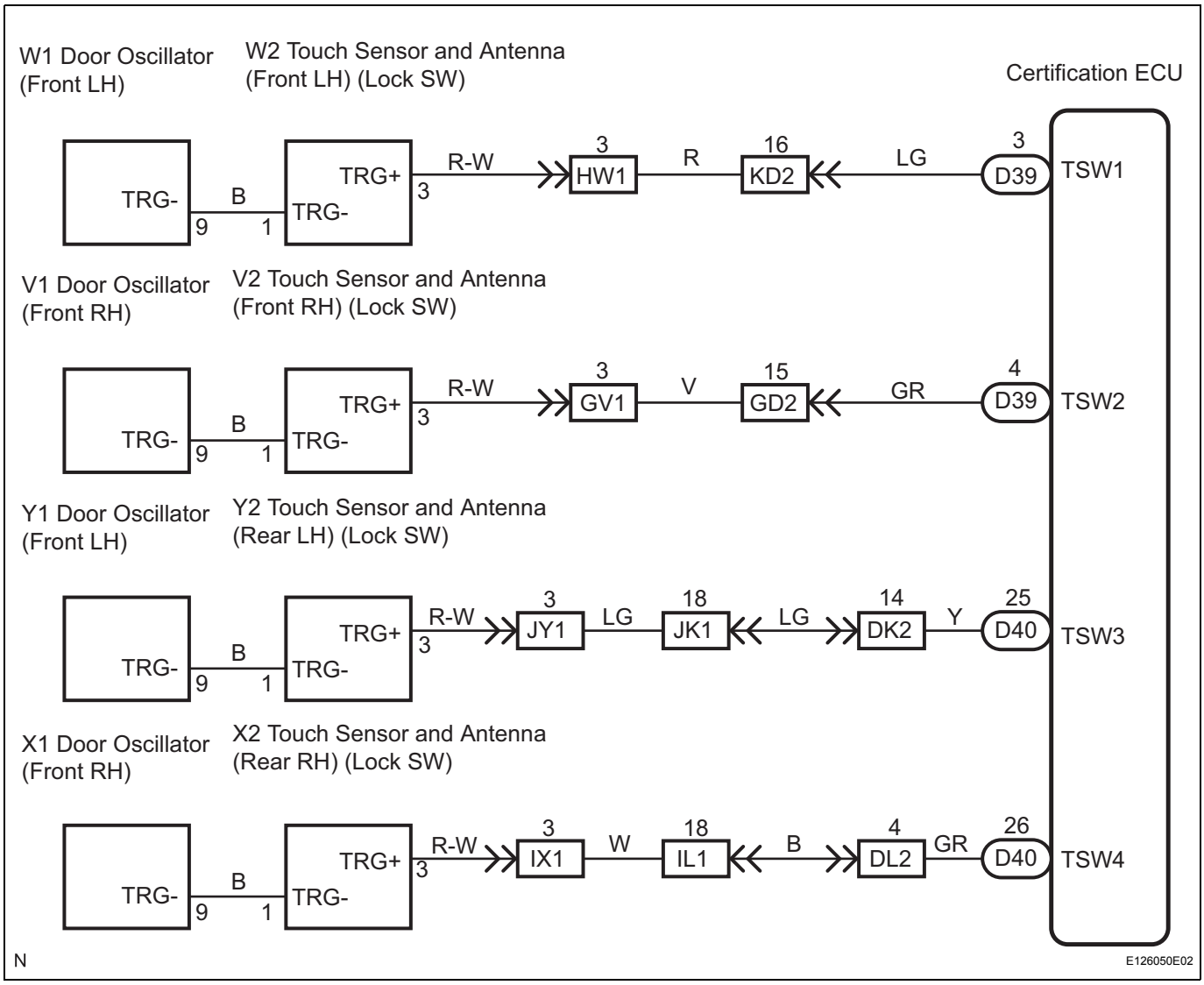

INSPECTION PROCEDURE

1	READ VALUE ON INTELLIGENT TESTER

(a) Connect the intelligent tester to the DLC3.
(b) Turn the engine switch on (IG).
(c) Following the display on the tester, select "DATA LIST".

SMART KEY (Certification ECU):

Item	Measurement Item / Range (Display)	Normal Condition	Diagnostic Note
D TRIGGER SW	Lock switch / ON or OFF	ON: Lock switch is pushed OFF: Lock switch is not pushed	-

Item	Measurement Item / Range (Display)	Normal Condition	Diagnostic Note
P TRIGGER SW	Lock switch / ON or OFF	ON: Lock switch is pushed OFF: Lock switch is not pushed	-
DR TRIGGER	Lock switch rear LH / ON or OFF	ON: Lock switch is pushed OFF: Lock switch is not pushed	-
DP TRIGGER	Lock switch rear RH / ON or OFF	ON: Lock switch is pushed OFF: Lock switch is not pushed	-

OK:
"ON" (lock switch is pressed) appears on the tester screen.

OK → **PROCEED TO NEXT CIRCUIT INSPECTION SHOWN IN PROBLEM SYMPTOMS TABLE**

NG

DL

2 INSPECT LOCK SWITCH

Lock Switch:

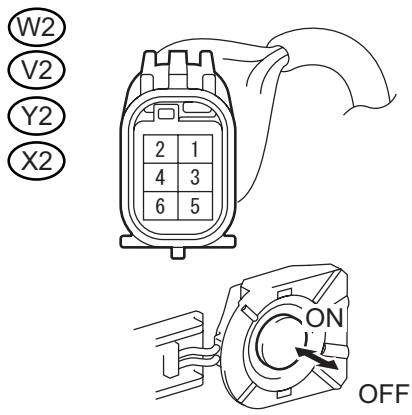

(a) Remove the outside handle.
(b) Disconnect the connectors.
(c) Measure the resistance according to the value(s) in the table below.

Resistance

Tester Connection	Condition	Specified Condition
W2-1 (TRG-) - W2-3 (TRG+)	Lock switch not pushed → Pushed	10 kΩ or higher → Below 1 Ω
V2-1 (TRG-) - V2-3 (TRG+)		
Y2-1 (TRG-) - Y2-3 (TRG+)		
X2-1 (TRG-) - X2-3 (TRG+)		

NG → **REPLACE OUTSIDE HANDLE**

OK

3	CHECK WIRE HARNESS (CERTIFICATION ECU - LOCK SWITCH)

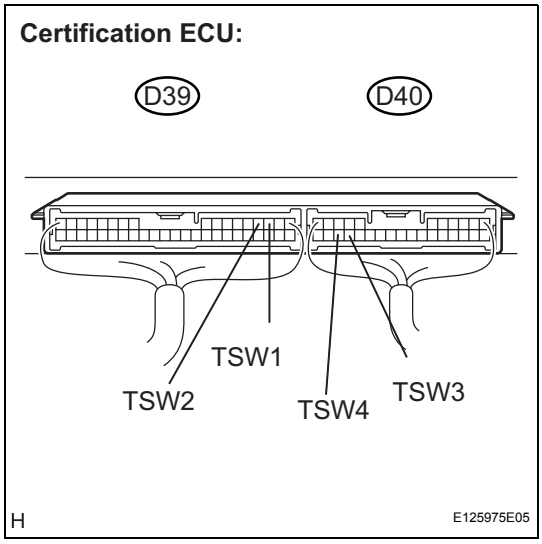

(a) Disconnect the D39 and D40 ECU connectors.

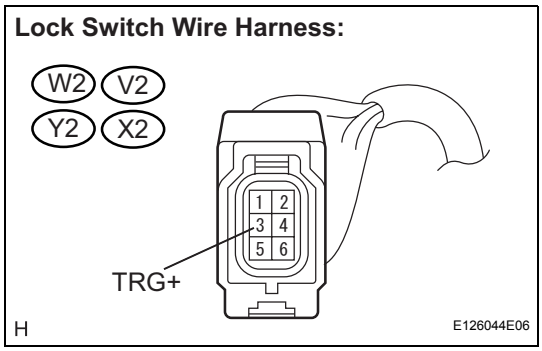

(b) Measure the resistance according to the value(s) in the table below.

Resistance

Tester Connection	Condition	Specified Condition
D39-3 (TSW1) - W2-3 (TRG+)	Always	Below 1 Ω
D39-4 (TSW2) - V2-3 (TRG+)	Always	Below 1 Ω
D40-25 (TSW3) - Y2-3 (TRG+)	Always	Below 1 Ω
D40-26 (TSW4) - X2-3 (TRG+)	Always	Below 1 Ω
D39-3 (TSW1) - Body ground	Always	10 kΩ or higher
D39-4 (TSW2) - Body ground	Always	10 kΩ or higher
D40-25 (TSW3) - Body ground	Always	10 kΩ or higher
D40-26 (TSW4) - Body ground	Always	10 kΩ or higher

NG → REPAIR OR REPLACE HARNESS OR CONNECTOR

OK

4	CHECK WIRE HARNESS (DOOR OSCILLATOR - LOCK SWITCH)

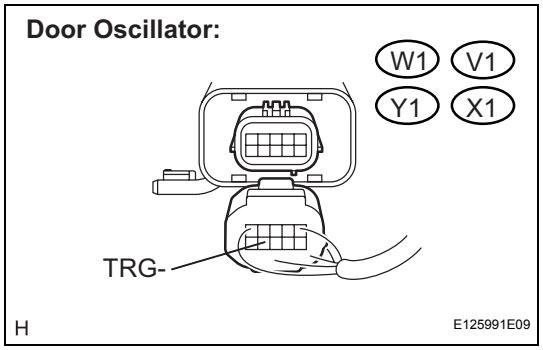

(a) Disconnect the door oscillator connector.

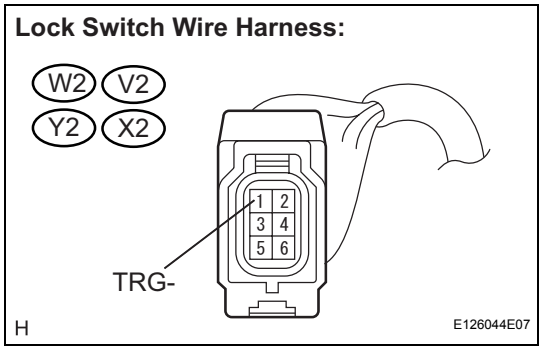

(b) Measure the resistance according to the value(s) in the table below.

Resistance

Tester Connection	Condition	Specified Condition
W1-9 (TRG-) - W2-1 (TRG-)	Always	Below 1 Ω
V1-9 (TRG-) - V2-1 (TRG-)	Always	Below 1 Ω
Y1-9 (TRG-) - Y2-1 (TRG-)	Always	Below 1 Ω
X1-9 (TRG-) - X2-1 (TRG-)	Always	Below 1 Ω
W1-9 (TRG-) - Body ground	Always	10 kΩ or higher
V1-9 (TRG-) - Body ground	Always	10 kΩ or higher
Y1-9 (TRG-) - Body ground	Always	10 kΩ or higher
X1-9 (TRG-) - Body ground	Always	10 kΩ or higher

NG → REPAIR OR REPLACE HARNESS OR CONNECTOR

OK

PROCEED TO NEXT CIRCUIT INSPECTION SHOWN IN PROBLEM SYMPTOMS TABLE

TRANSMITTER BATTERY

INSPECTION

1. INSPECT DOOR CONTROL TRANSMITTER

(a) Inspect operation of the transmitter.

(1) Remove the battery (lithium battery) from the transmitter (See page DL-234).

(2) Install a new non-depleted battery (lithium battery).
HINT:
When a new or non-depleted transmitter battery is not available, connect 2 new 1.5 V batteries in series. Then connect leads to the batteries and use the leads to apply 3 V voltage to the transmitter, as shown in the illustration.

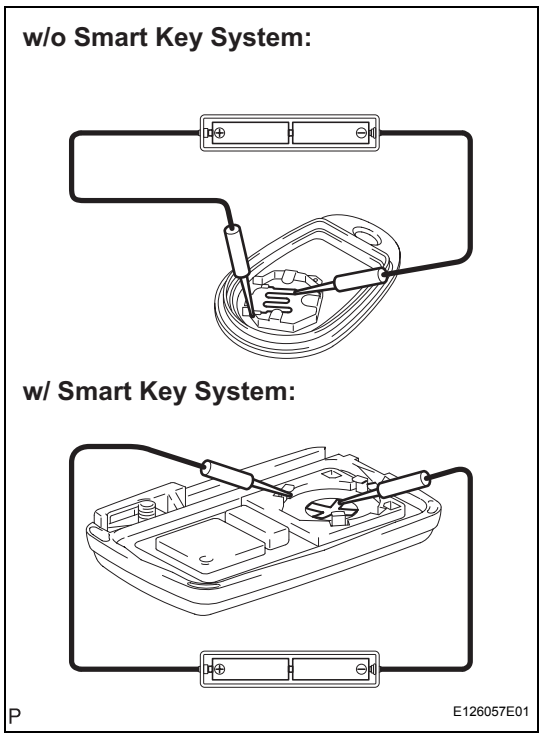

(3) From outside the vehicle, approximately 1 m (3.28 ft) from the driver side outside door handle, test the transmitter by pointing its key plate at the vehicle and pressing a transmitter switch.
OK:
The door lock can be operated via the transmitter.
HINT:
- The operational area differs depending on the user, the way the transmitter is held and the location.
- Since the transmitter uses faint electric waves, the operational area may be shortened if noise or strong electric waves occur in the area where the transmitter is used. In some cases, the transmitter may not function.

(4) Install the battery (lithium battery).

(b) Inspect the battery capacity.
HINT:
- When checking the amount of energy left in the battery (lithium battery), the battery must be checked while it is installed in the transmitter (a resistance of 1.2 kΩ is applied to the battery). When the battery energy is checked by itself (uninstalled), the voltage reading will be more than 2.5 V until the energy is depleted.
- If the transmitter is malfunctioning, the voltage reading of the energy left in the battery may be inaccurate.

(1) Remove the battery (lithium battery) from the transmitter (See page DL-234).

w/o Smart Key System:

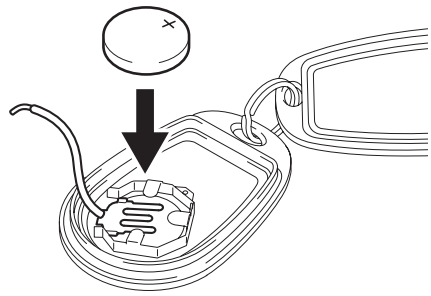

w/ Smart Key System:

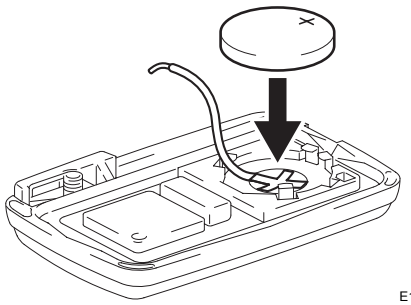

P E126058E01

(2) Connect a wire to the negative (-) terminal of the transmitter and install the battery.

w/o Smart Key System:

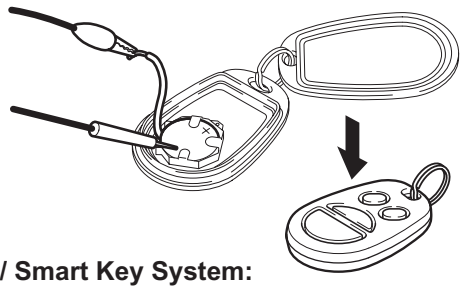

w/ Smart Key System:

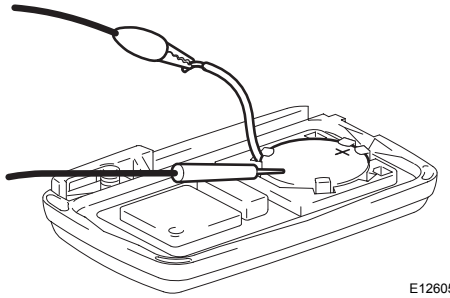

P E126059E01

(3) Connect the tester's positive (+) lead to the positive (+) side of the battery (lithium battery) and the tester's negative (-) lead to the wire.
(4) Press one of the transmitter switches for approximately 1 second.
(5) Press the transmitter switch again to check the voltage.

Voltage:

2.2 V or higher

HINT:

- When the temperature of the battery is low, the inspection cannot be made correctly. When the outcome of the test is less than 2.2 V, conduct the test again after leaving the battery in a place with a temperature 18°C (64°F) for more than 30 minutes.
- Read the voltage immediately after the switch is pressed. When 0.8 seconds have passed after the switch is pressed, the automatic power-off function starts and resistance applied to the battery will cease. The voltage of the battery will be 2.5 V or more.
- Press the switch at least 3 times before reading the voltage.

If the battery has just been returned to 18°C (64°F), the voltage may be unusually high for the first or second voltage reading.

(6) Disconnect the lead.
(7) Set the battery (lithium battery) in the transmitter.

DL

REPLACEMENT

HINT:
Installation is in the reverse order of removal.

1. REMOVE TRANSMITTER BATTERY
NOTICE:
Take extra care when handling these precision electronic components.

(a) Using a coin or equivalent, pry apart the transmitter case.
NOTICE:
Do not forcibly pry apart the case.

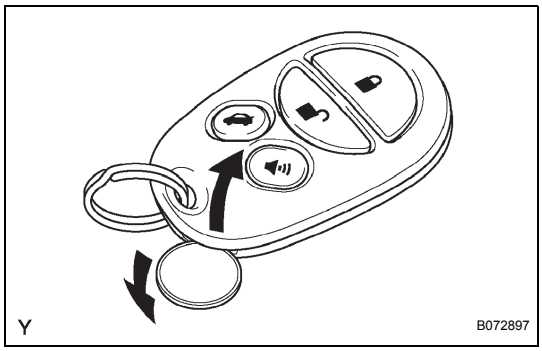

(b) Remove the battery (lithium battery).
NOTICE:
- **Do not push the terminals with your finger.**
- **Do not forcibly pry up the battery (lithium battery). The terminals may become damaged.**
- **Do not touch the battery with wet hands. Water may cause rust.**
- **Do not touch or move any components inside the transmitter as it may cease to work.**

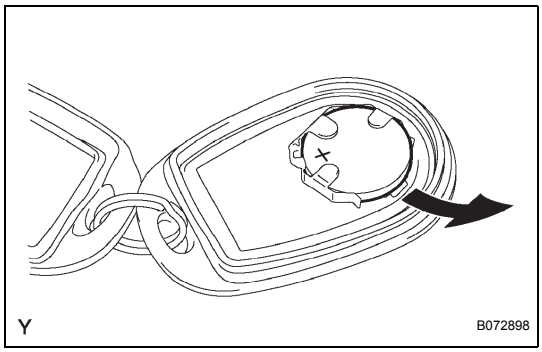

2. REMOVE TRANSMITTER BATTERY
NOTICE:
Take extra care when handling these precision electronic components.

(a) Push and hold the release knob in the direction indicated by the arrow in the illustration. Take the emergency key out of the transmitter case.

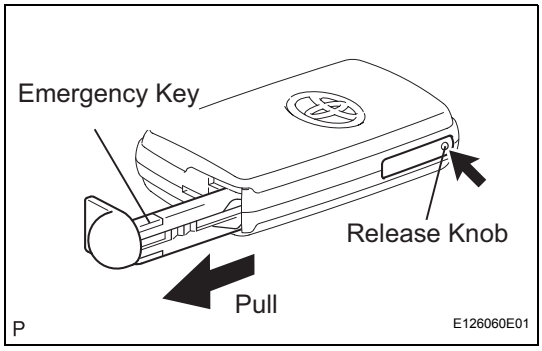

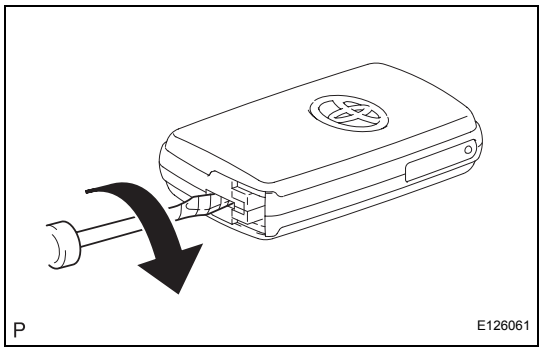

(b) Using a screwdriver, open the transmitter case.
NOTICE:
Do not forcibly pry apart the cover.
HINT:
Tape the screwdriver tip before use.

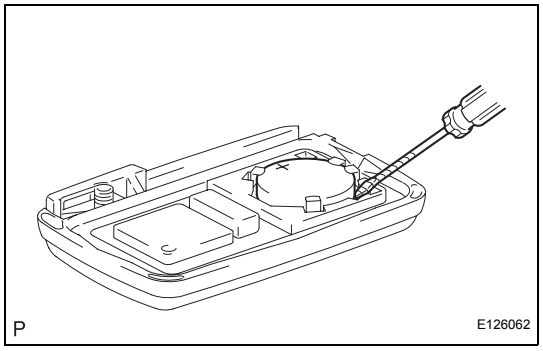

(c) Using a screwdriver, remove the transmitter's battery from the key, as shown in the illustration.
NOTICE:
- **Do not push the terminals with your finger.**
- **Do not forcibly pry up the battery (lithium battery). The terminals may become damaged.**
- **Do not touch the battery with wet hands. Water may cause rust.**
- **Do not touch or move any components inside the transmitter as it may cease to work.**

3. INSTALL TRANSMITTER BATTERY

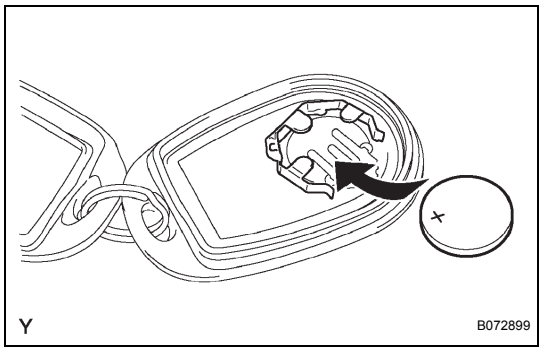

(a) Install a new battery (lithium battery) with the positive (+) side up as shown in the illustration.
NOTICE:
- **Be sure that the positive side and the negative side of the transmitter battery are matched up correctly.**
- **Be careful not to bend the transmitter battery electrode during insertion.**
- **keep the transmitter case's interior free of dust and oil.**

(b) Install the case securely.

4. INSTALL TRANSMITTER BATTERY

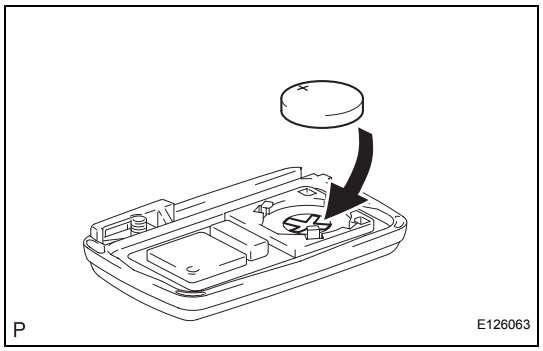

(a) Install a new battery (lithium battery) with the positive (+) side up, as shown in the illustration.
NOTICE:
- **Be sure that the positive (+) side and the negative (-) side of the transmitter battery are matched up correctly.**
- **Be careful not to bend the transmitter battery electrode during insertion.**
- **Keep the transmitter case interior free of dust and oil.**

DL

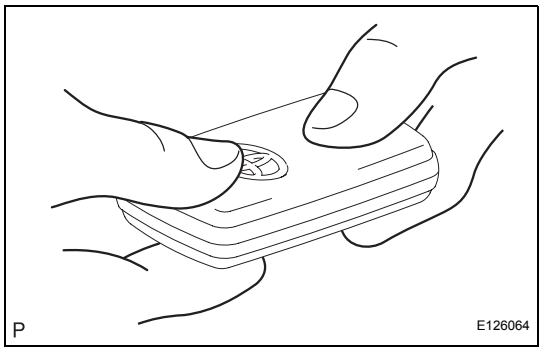

(b) Install the transmitter case as shown in the illustration.

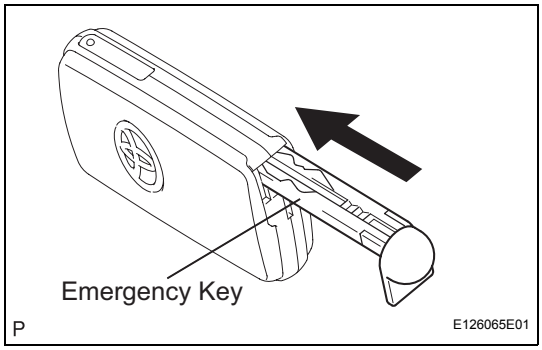

(c) Insert the emergency key into the transmitter case.
HINT:
After installation, press any of the transmitter's switches. Check that the LED illuminates.

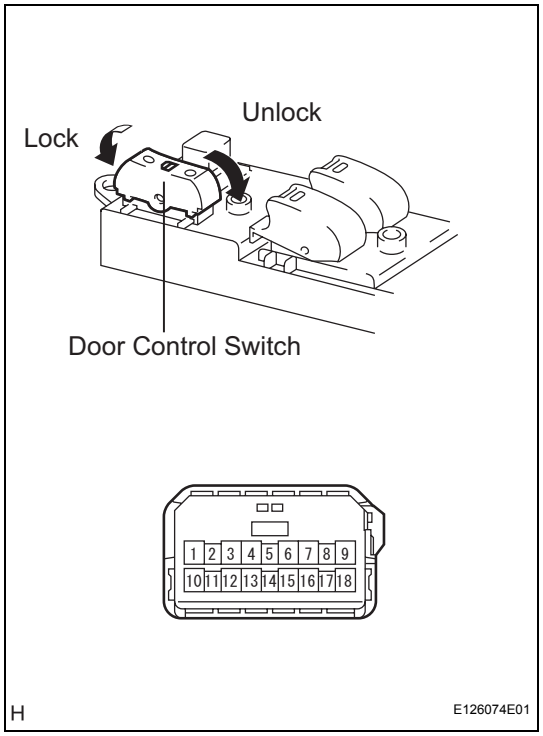

DOOR CONTROL SWITCH

INSPECTION

1. INSPECT DOOR LOCK CONTROL SWITCH (for Driver Side)

(a) Remove the multiplex network master switch assembly.

(b) Measure the resistance of the door control switch.

Resistance

Tester Connection	Condition	Specified Condition
1 - 5	Lock	Below 1 Ω
1 - 5 1 - 8	OFF	10 kΩ or higher
1 - 8	Unlock	Below 1 Ω

If the result is not as specified, replace the switch assembly.

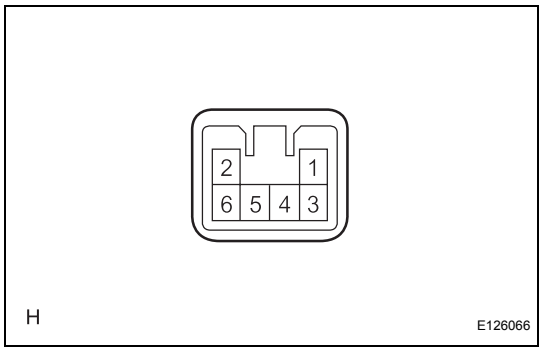

2. INSPECT DOOR LOCK CONTROL SWITCH (for Front Passenger Side)

(a) Remove the door lock control switch assembly.

(b) Measure the resistance of the switch.

Resistance

Tester Connection	Switch Condition	Specified Condition
3 - 6	Lock	Below 1 Ω
3 - 5 3 - 6	OFF	10 kΩ or higher
3 - 5	Unlock	Below 1 Ω

If the result is not as specified, replace the switch assembly.

DL

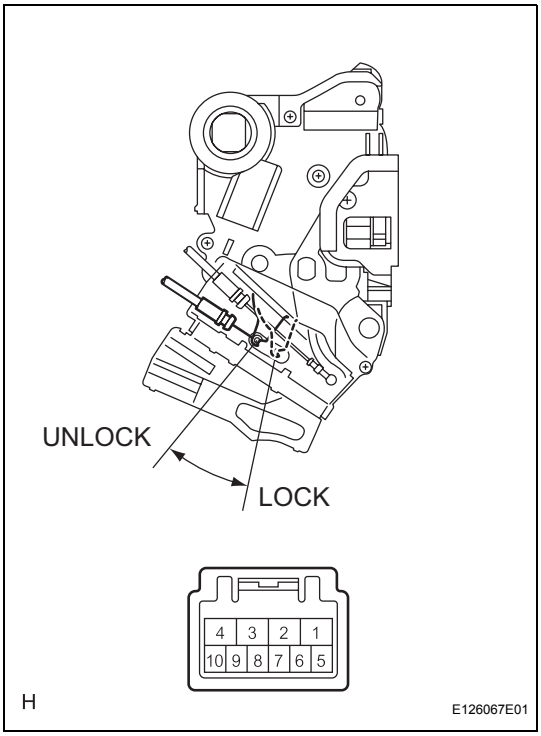

FRONT DOOR LOCK

INSPECTION

1. INSPECT FRONT DOOR LOCK ASSEMBLY LH

(a) Remove the front door lock assembly LH.

(b) Apply battery voltage to the door lock and check operation of the door lock motor.

OK

Measurement Condition	Specified Condition
Battery positive (+) → Terminal 4 Battery negative (-) → Terminal 1	Lock
Battery positive (+) → Terminal 1 Battery negative (-) → Terminal 4	Unlock

If the result is not as specified, replace the door lock assembly.

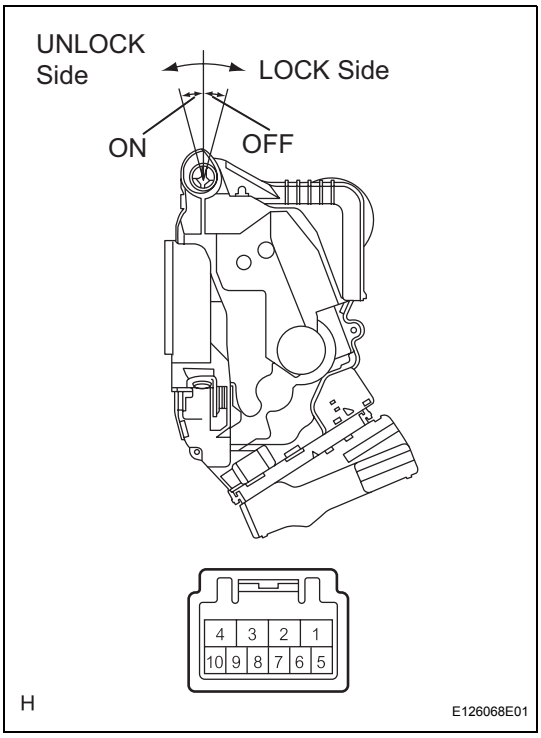

(c) Measure the resistance of the door key lock and unlock switch.

Resistance

Tester Connection	Door Lock Condition	Specified Condition
9 - 7	Lock	10 kΩ or higher
10 - 7	Unlock	Below 1 Ω

If the result is not as specified, replace the door lock assembly.

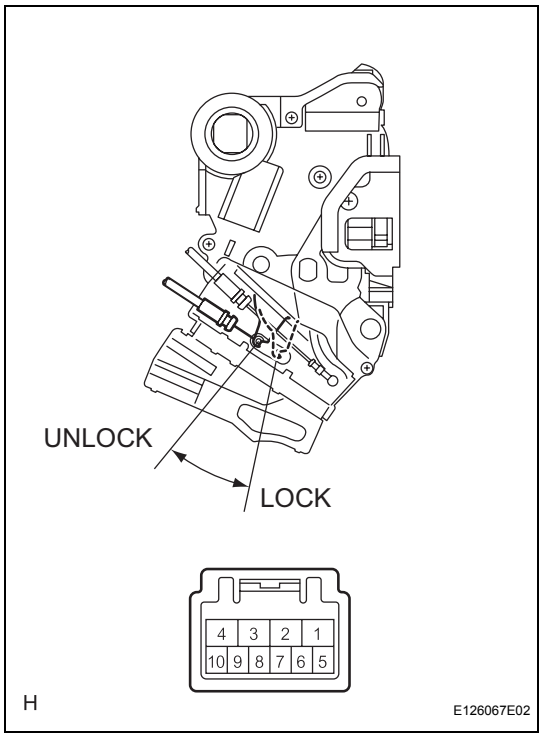

(d) Measure the resistance of the door unlock detection switch.

Resistance

Tester Connection	Door Lock Condition	Specified Condition
Battery positive (+) → Terminal 1 Battery negative (-) → Terminal 4	ON (Door lock set to UNLOCK)	7 - 8 (Below 1 Ω)
Battery positive (+) → Terminal 4 Battery negative (-) → Terminal 1	OFF (Door lock set to LOCK)	7 - 8 (10 kΩ or higher)

If the result is not as specified, replace the door lock assembly.

DL

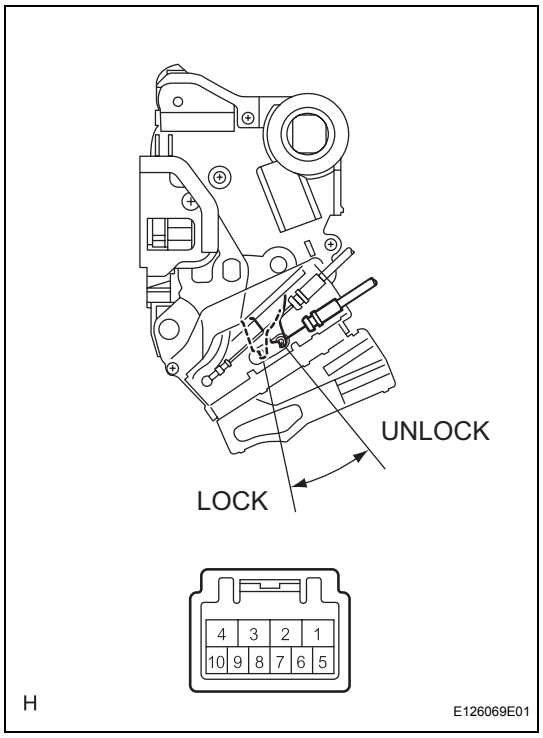

2. INSPECT FRONT DOOR LOCK ASSEMBLY RH

(a) Remove the front door lock assembly RH.

(b) Apply battery voltage to the door lock and check operation of the door lock motor.

OK

Measurement Condition	Specified Condition
Battery positive (+) → Terminal 4 Battery negative (-) → Terminal 1	Lock
Battery positive (+) → Terminal 1 Battery negative (-) → Terminal 4	Unlock

If the result is not as specified, replace the door lock assembly.

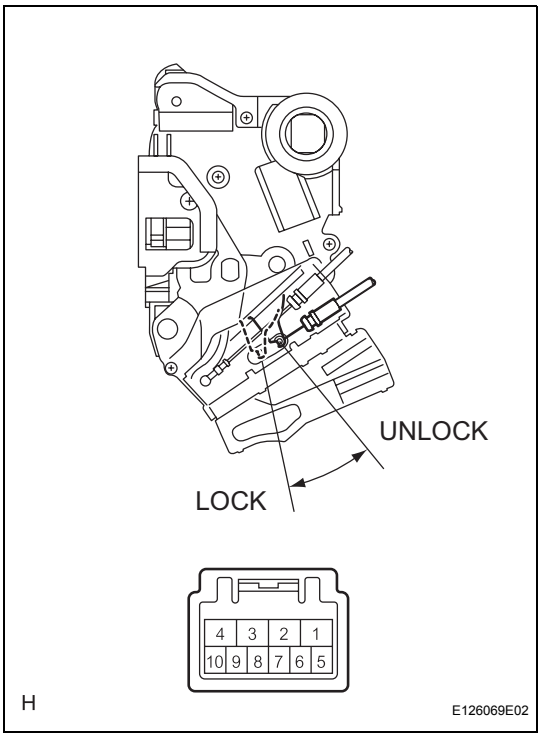

(c) Measure the resistance of the door unlock detection switch.

Resistance

Tester Connection	Door Lock Condition	Specified Condition
Battery positive (+) → Terminal 1 Battery negative (-) → Terminal 4	ON (Door lock set to UNLOCK)	7 - 8 (Below 1 Ω)
Battery positive (+) → Terminal 4 Battery negative (-) → Terminal 1	OFF (Door lock set to LOCK)	7 - 8 (10 kΩ or higher)

If the result is not as specified, replace the door lock assembly.

DL

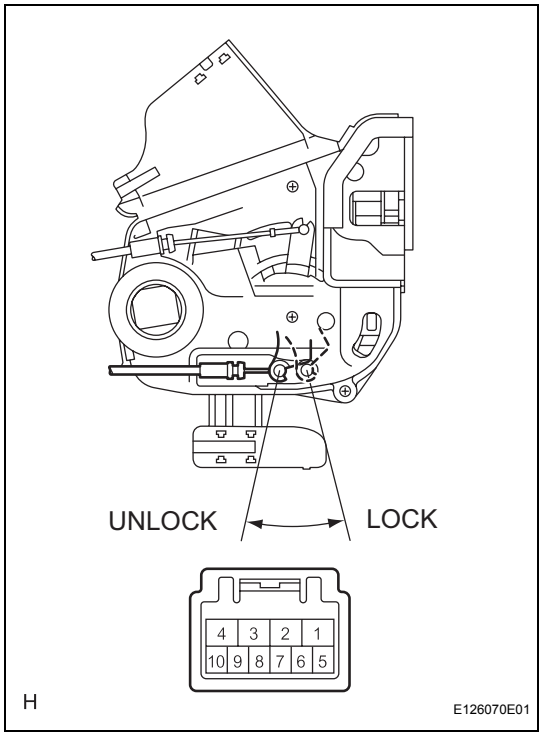

REAR DOOR LOCK

INSPECTION

1. INSPECT REAR DOOR LOCK ASSEMBLY LH

(a) Remove the rear door lock assembly LH.

(b) Apply battery voltage to the door lock and check operation of the door lock motor.

OK

Measurement Condition	Specified Condition
Battery positive (+) → Terminal 4 Battery negative (-) → Terminal 1	Lock
Battery positive (+) → Terminal 1 Battery negative (-) → Terminal 4	Unlock

If the result is not as specified, replace the door lock assembly.

(c) Measure the resistance of the door unlock detection switch.

Resistance

Tester Connection	Door Lock Condition	Specified Condition
Battery positive (+) → Terminal 1 Battery negative (-) → Terminal 4	ON (Door lock set to UNLOCK)	6 - 9 (Below 1 Ω)
Battery positive (+) → Terminal 4 Battery negative (-) → Terminal 1	OFF (Door lock set to LOCK)	6 - 9 (10 kΩor higher)

If the result is not as specified, replace the door lock assembly.

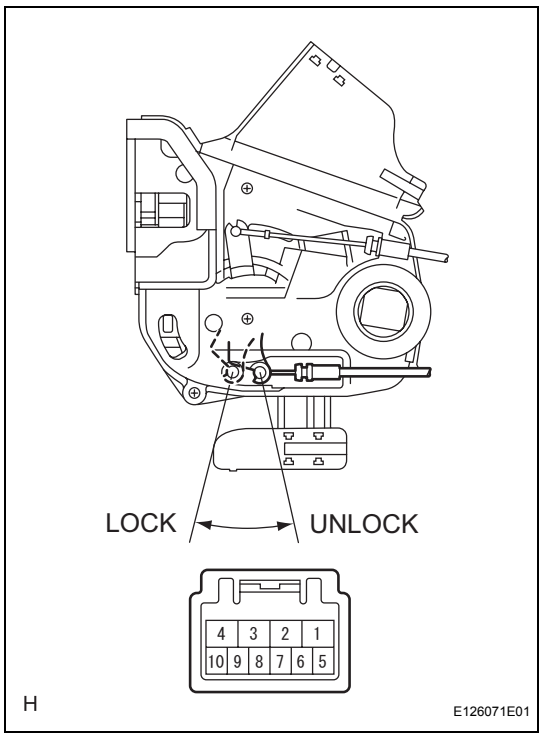

2. INSPECT REAR DOOR LOCK ASSEMBLY RH

(a) Remove the rear door lock assembly RH.

(b) Apply battery voltage to the door lock and check operation of the door lock motor.

OK

Measurement Condition	Specified Condition
Battery positive (+) → Terminal 4 Battery negative (-) → Terminal 1	Lock
Battery positive (+) → Terminal 1 Battery negative (-) → Terminal 4	Unlock

If the result is not as specified, replace the door lock assembly.

(c) Measure the resistance of the door unlock detection switch.

Resistance

Tester Connection	Door Lock Condition	Specified Condition
Battery positive (+) → Terminal 1 Battery negative (-) → Terminal 4	ON (Door lock set to UNLOCK)	6 - 9 (Below 1 Ω)
Battery positive (+) → Terminal 4 Battery negative (-) → Terminal 1	OFF (Door lock set to LOCK)	6 - 9 (10 kΩor higher)

DL

If the result is not as specified, replace the door lock assembly.

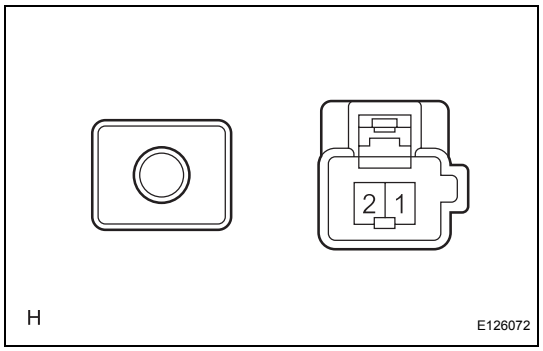

LUGGAGE COMPARTMENT DOOR OPENER OUTER SWITCH

INSPECTION

1. INSPECT LUGGAGE COMPARTMENT DOOR OPENER SWITCH ASSEMBLY

(a) Remove the luggage compartment door opener switch.

(b) Measure the resistance of the luggage compartment door opener switch.

Resistance

Tester Connection	Door Lock Condition	Specified Condition
1 - 2	Lock	Below 1 Ω
1 - 2	Unlock	10 kΩ or higher

DL

DRIVE SHAFT SYSTEM

PROBLEM SYMPTOMS TABLE

Use the table below to help find the cause of the problem.
The causes of the problem are listed in order of probability in the "Suspected Area" column.
Check each part in order. If necessary, replace these parts.

DRIVE SHAFT SYSTEM

Symptom	Suspected area	See page
Noise (Front drive shaft)	Inboard or outboard joint (Worm)	DS-9

FRONT DRIVE SHAFT

COMPONENTS

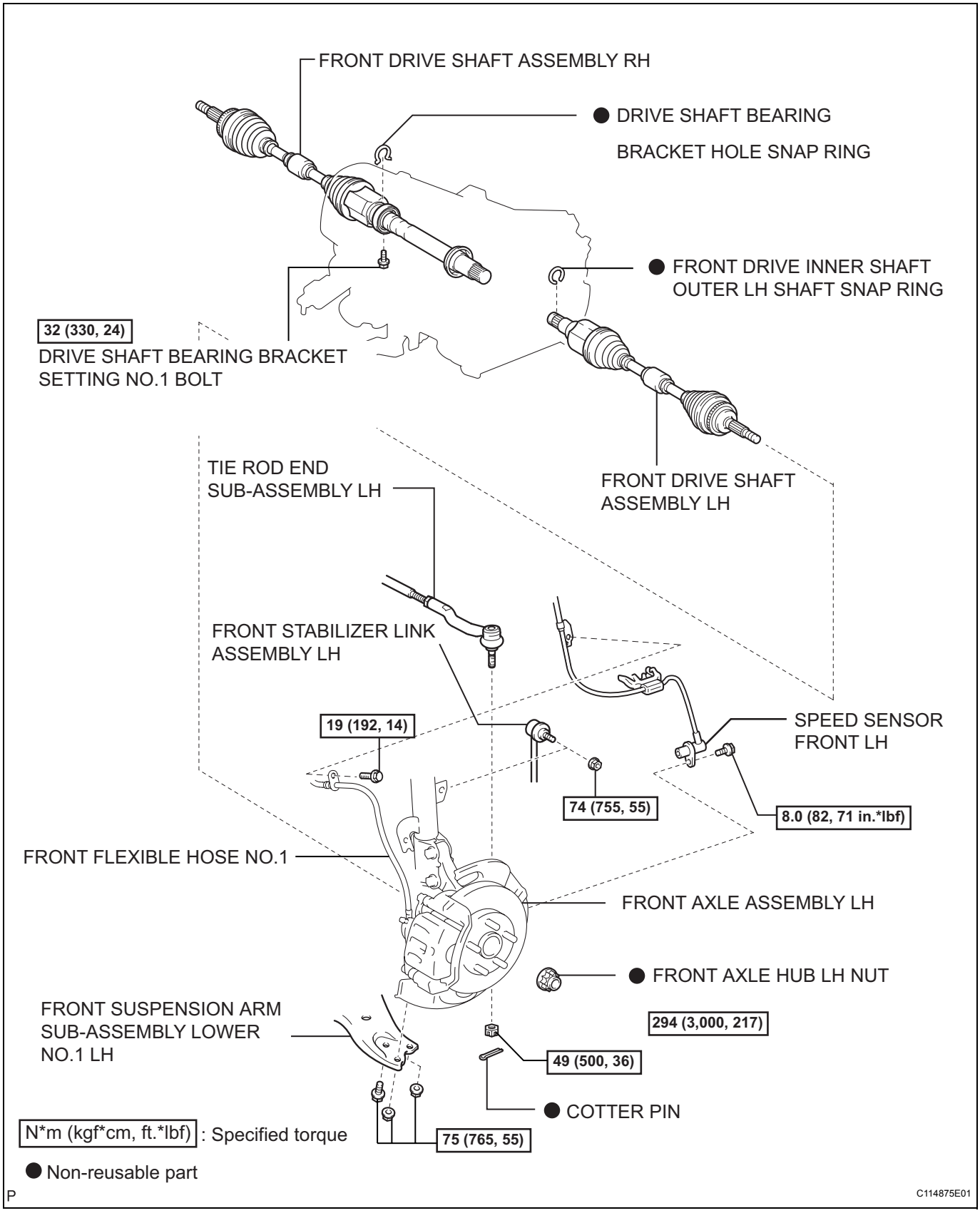

DS

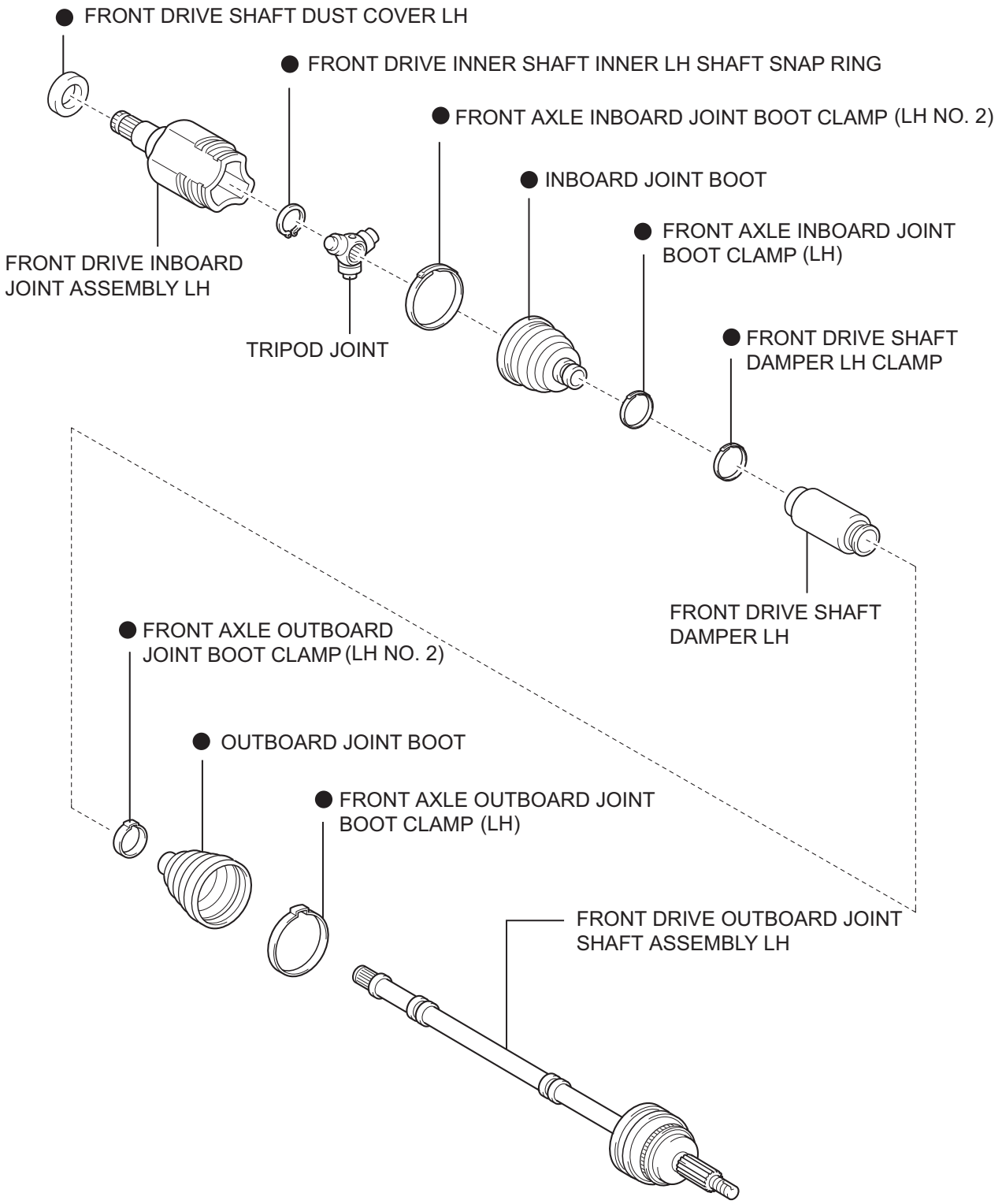

● Non-reusable part

P

C114876E01

DS

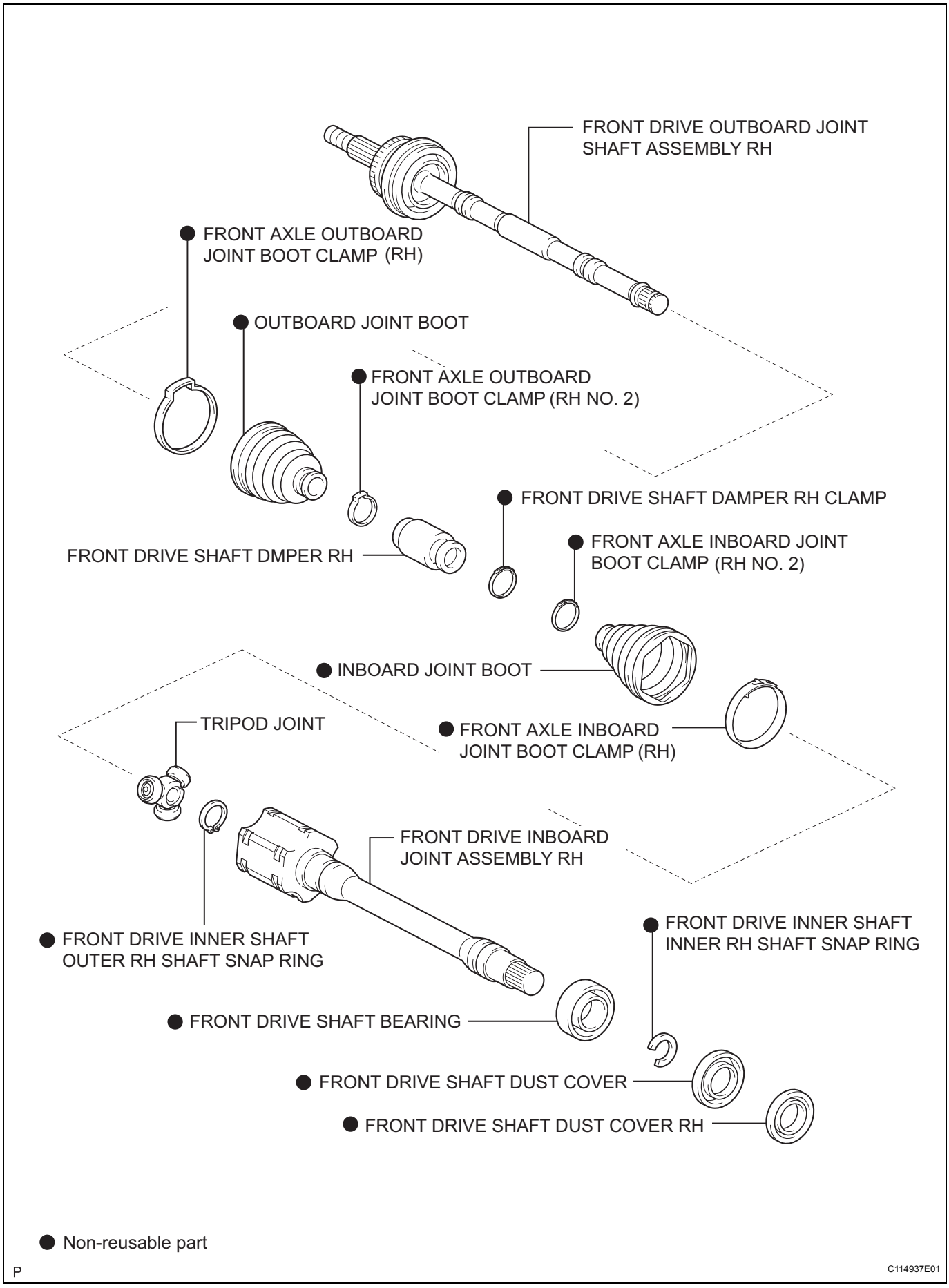
FRONT DRIVE OUTBOARD JOINT SHAFT ASSEMBLY RH
FRONT AXLE OUTBOARD JOINT BOOT CLAMP (RH)
OUTBOARD JOINT BOOT
FRONT AXLE OUTBOARD JOINT BOOT CLAMP (RH NO. 2)
FRONT DRIVE SHAFT DAMPER RH CLAMP
FRONT DRIVE SHAFT DMPER RH
FRONT AXLE INBOARD JOINT BOOT CLAMP (RH NO. 2)
INBOARD JOINT BOOT
TRIPOD JOINT
FRONT AXLE INBOARD JOINT BOOT CLAMP (RH)
FRONT DRIVE INBOARD JOINT ASSEMBLY RH
FRONT DRIVE INNER SHAFT OUTER RH SHAFT SNAP RING
FRONT DRIVE INNER SHAFT INNER RH SHAFT SNAP RING
FRONT DRIVE SHAFT BEARING
FRONT DRIVE SHAFT DUST COVER
FRONT DRIVE SHAFT DUST COVER RH
● Non-reusable part
P
C114937E01

DS

REMOVAL

HINT:
- Use the same procedures for the RH side and LH side.
- The procedures listed below are for the LH side.

1. REMOVE ENGINE UNDER COVER LH

2. DRAIN AUTOMATIC TRANSAXLE FLUID

(a) Remove the drain plug and gasket, and then drain the ATF.

(b) Install a new gasket and drain plug.
Torque: 49 N*m (500 kgf*cm, 36 ft.*lbf)

3. REMOVE FRONT WHEEL

4. REMOVE FRONT AXLE HUB LH NUT

(a) Using SST and hammer, release the staked part of the front axle hub LH nut.
SST 09930-00010
NOTICE:
Loosen the staked part of the nut completely, otherwise the screw of the drive shaft may be damaged.

(b) While applying the brakes, remove the front axle hub LH nut.

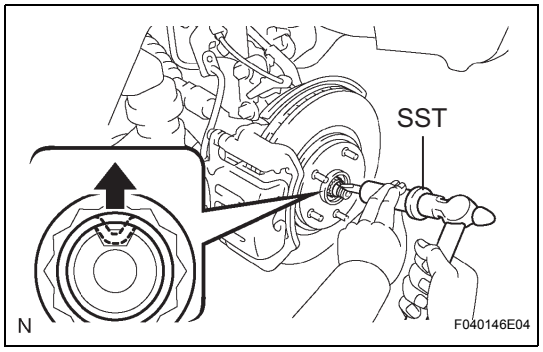

5. SEPARATE FRONT STABILIZER LINK ASSEMBLY LH

(a) Remove the nut and separate the front stabilizer link assembly LH.
HINT:
If the ball joint turns together with the nut, use a hexagon wrench (6mm) to hold the stud.

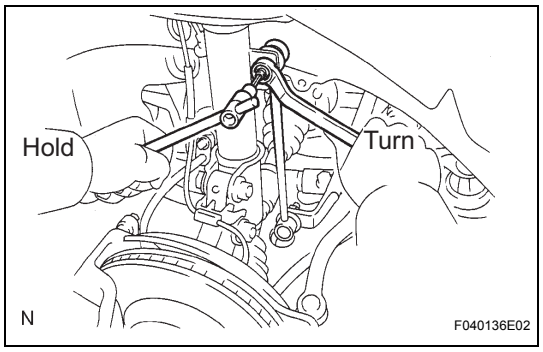

6. SEPARATE SPEED SENSOR FRONT LH

(a) Remove the bolt and clip, and separate the speed sensor wire and flexible hose from the shock absorber.

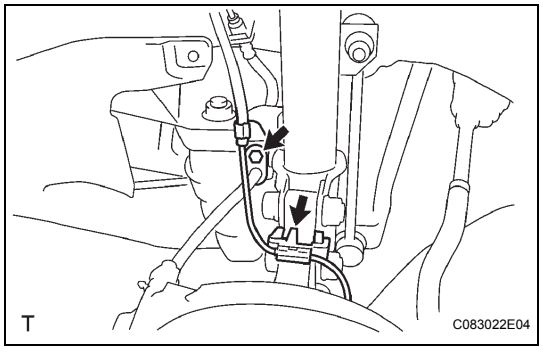

DS

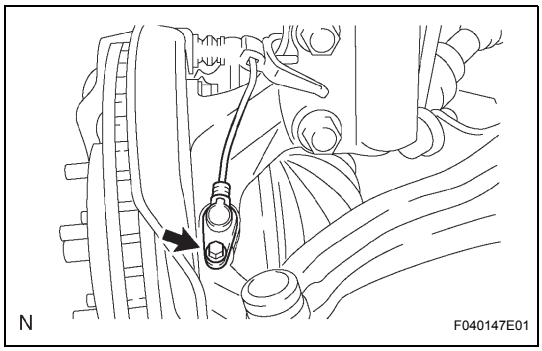

(b) Remove the bolt and separate the speed sensor front LH from the steering knuckle.
NOTICE:
- **Prevent foreign matter from adhering to the speed sensor.**
- **Be carecareful not to damage the speed sensor.**

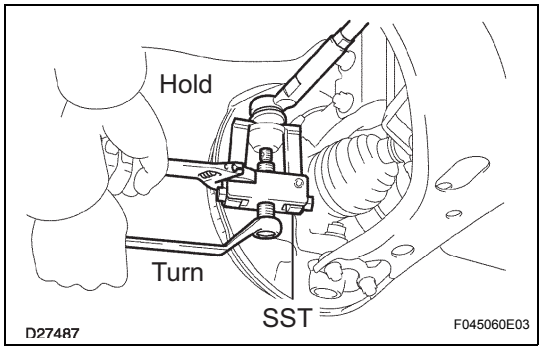

7. SEPARATE TIE ROD END SUB-ASSEMBLY LH
(a) Remove the cotter pin and nut.
(b) Using SST, separate the tie rod end sub-assembly LH from the steering knuckle.
SST 09628-62011
NOTICE:
Do not damage the ball joint dust cover.

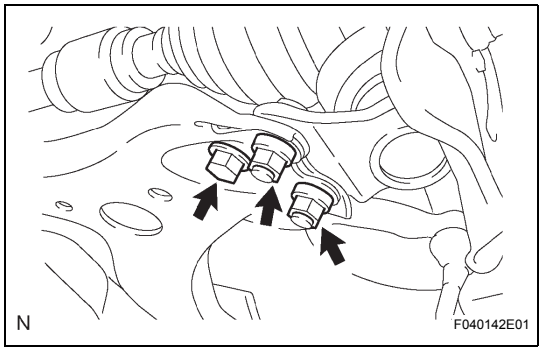

8. SEPARATE FRONT SUSPENSION ARM SUB-ASSEMBLY LOWER NO.1 LH
(a) Remove the bolt and 2 nuts, and separate the front suspension arm sub-assembly lower No.1 LH from the lower ball joint.

DS

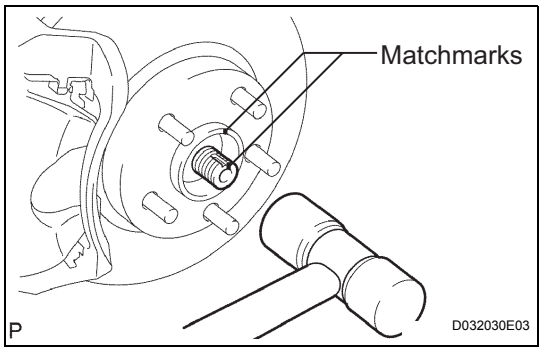

9. SEPARATE FRONT AXLE ASSEMBLY LH
(a) Put matchmarks on the front drive shaft assembly LH and the axle hub.
(b) Using a plastic hammer, separate the front drive shaft assembly LH from the front axle hub sub-assembly LH.
NOTICE:
Be careful not to damage the drive shaft boot and speed sensor rotor.

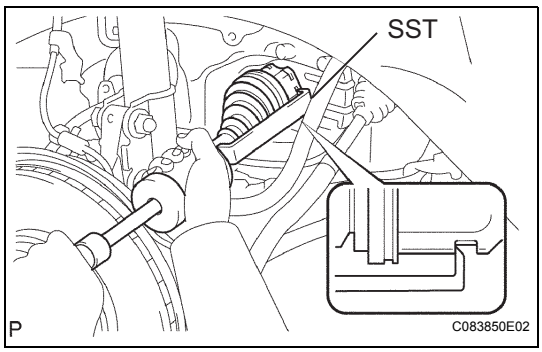

10. REMOVE FRONT DRIVE SHAFT ASSEMBLY LH
(a) Using SST, remove the front drive shaft assembly LH.
SST 09520-01010, 09520-24010 (09520-32040)
NOTICE:
- **Be careful not to damage the drive shaft dust cover, boot and oil seal.**
- **Be careful not to drop the drive shaft assembly.**

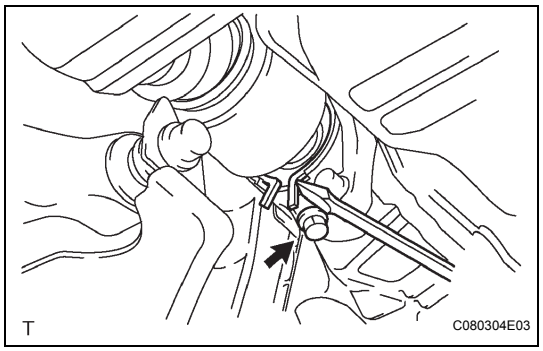

11. REMOVE FRONT DRIVE SHAFT ASSEMBLY RH

(a) Using a screwdriver, remove the bearing bracket hole snap ring.

(b) Remove the bolt and front drive shaft assembly RH from the drive shaft bearing bracket.

NOTICE:

Do not damage the boot and oil seal.

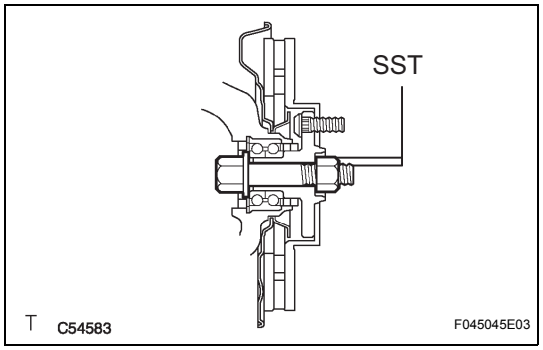

12. FIX FRONT AXLE HUB SUB-ASSEMBLY LH

(a) Fix front axle hub bearing.

SST 09608-16042 (09608-02021, 09608-02041)

NOTICE:

The hub bearing could be damaged if it is subjected to the vehicle's full weight, such as moving the vehicle with the drive shaft removed. If it is necessary to place the vehicle's weight on the hub bearing, first support it with SST.

DISASSEMBLY

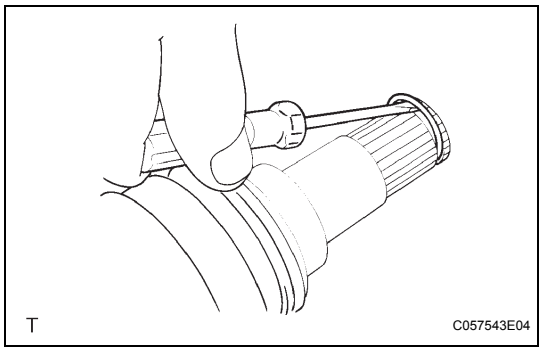

1. REMOVE FRONT DRIVE INNER SHAFT OUTER LH SHAFT SNAP RING

(a) Using a screwdriver, remove the front drive inner shaft outer LH shaft snap ring.

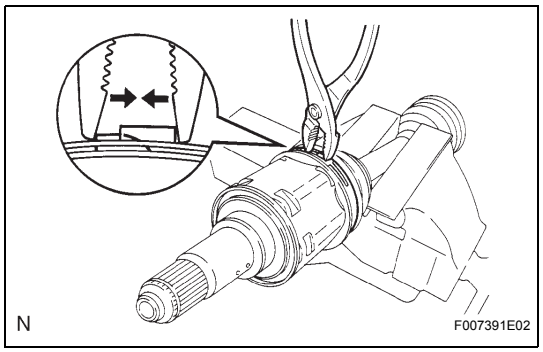

2. REMOVE FRONT AXLE INBOARD JOINT BOOT CLAMP

(a) Using pliers, remove the inboard joint boot LH No.2 clamp and inboard joint boot LH clamp, as shown in the illustration.

3. SEPARATE FRONT AXLE INBOARD JOINT BOOT

(a) Separate the inboard joint boot from the inboard joint assembly.

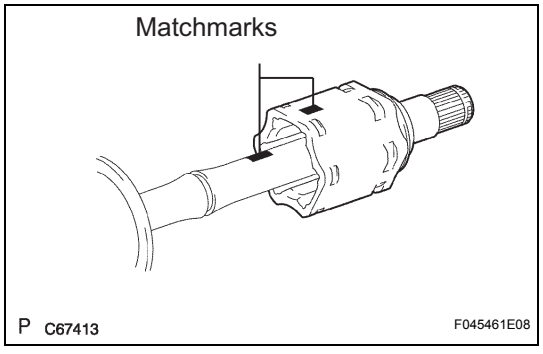

4. REMOVE FRONT DRIVE INBOARD JOINT ASSEMBLY LH

(a) Put matchmarks on the inboard joint assembly and outboard joint shaft.

NOTICE:

Do not use a punch for the marks.

(b) Remove the inboard joint assembly from the outboard joint shaft.

DS

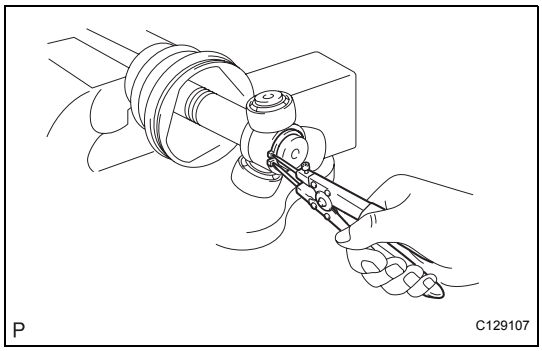

(c) Using a snap ring expander, remove the shaft snap ring.

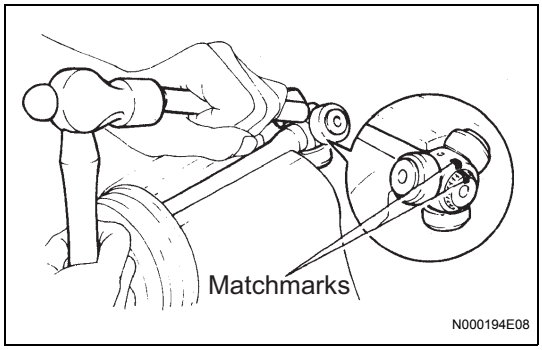

(d) Put matchmarks on the outboard joint shaft and tripod joint.
NOTICE:
Do not use a punch for the marks.
(e) Using a brass bar and a hammer, remove the tripod joint from the outboard joint shaft.
NOTICE:
Do not tap the roller.

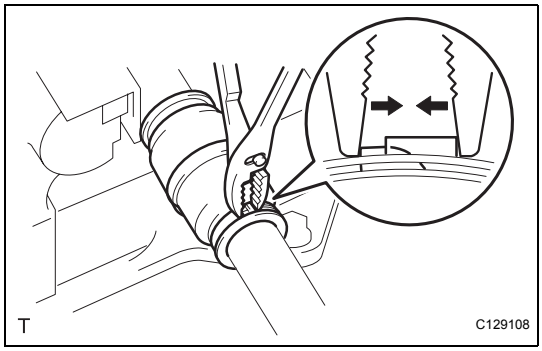

5. REMOVE FRONT DRIVE SHAFT DAMPER LH
(a) Using pliers, remove the drive shaft damper clamp, as shown in the illustration.
(b) Remove the drive shaft damper.

DS

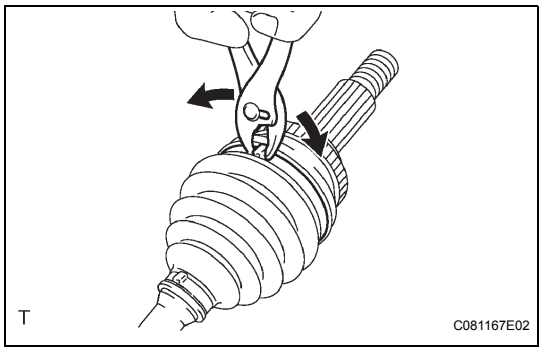

6. REMOVE FRONT AXLE OUTBOARD JOINT BOOT CLAMP
(a) Using pliers, remove the outboard joint boot LH No.2 clamp and outboard joint boot LH clamp, as shown in the illustration.

7. REMOVE OUTBOARD JOINT BOOT
(a) Remove the outboard joint boot from the outboard joint shaft.
(b) Remove the grease from the outboard joint.

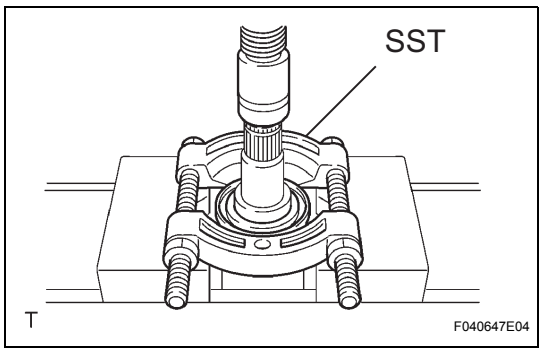

8. REMOVE FRONT DRIVE SHAFT DUST COVER LH
(a) Using SST and a press, remove the drive shaft dust cover LH.
SST 09950-00020
NOTICE:
Be careful not to drop the inboard joint assembly.

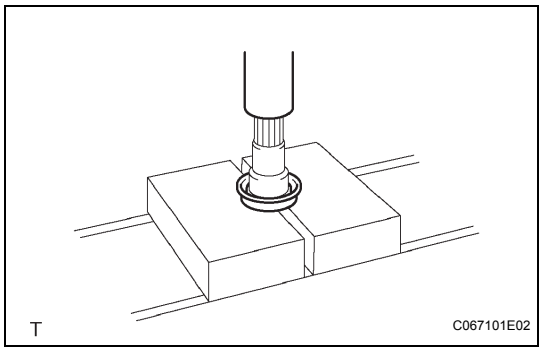

9. REMOVE FRONT DRIVE SHAFT DUST COVER RH

(a) Using a press, remove the drive shaft dust cover RH.

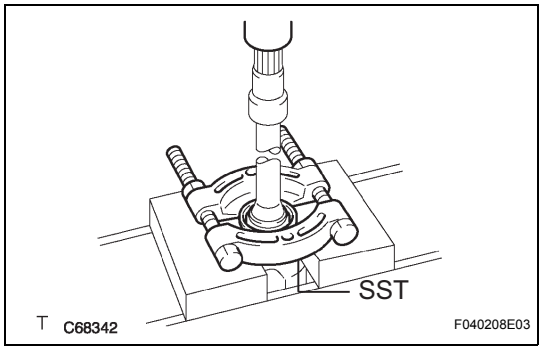

10. REMOVE FRONT DRIVE SHAFT DUST COVER

(a) Using SST and a press, remove the drive shaft dust cover.
SST 09950-00020

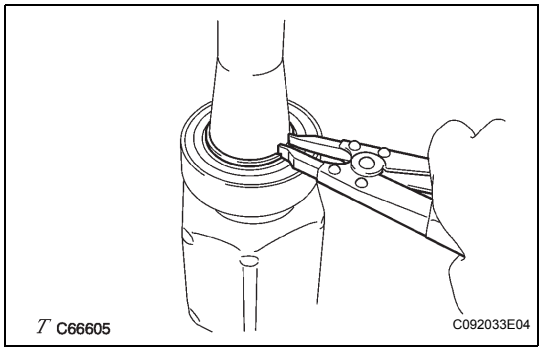

11. REMOVE FRONT DRIVE SHAFT BEARING

(a) Using a snap ring expander, remove the drive shaft hole snap ring.

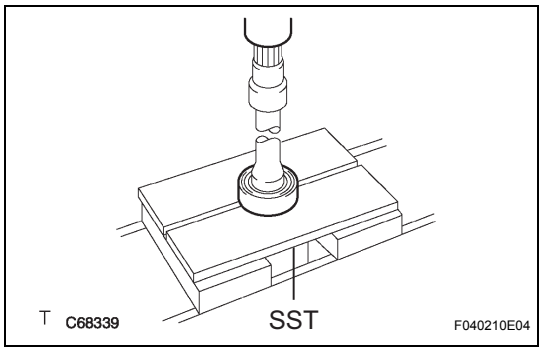

(b) Using SST and a press, remove the bearing.
SST 09527-10011

(c) Remove the bearing bracket hole snap ring.
NOTICE:
Be careful not to drop the inboard joint assembly.

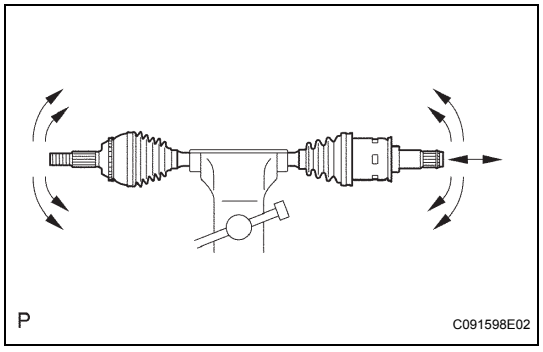

INSPECTION

1. INSPECT FRONT DRIVE SHAFT ASSEMBLY

(a) Check that there is no excessive play in the outboard joint.

(b) Check that the inboard joint slides smoothly in the thrust direction.

(c) Check that there is no excessive play in the radial directions of the inboard joint.

(d) Check the boots for damage.

DS

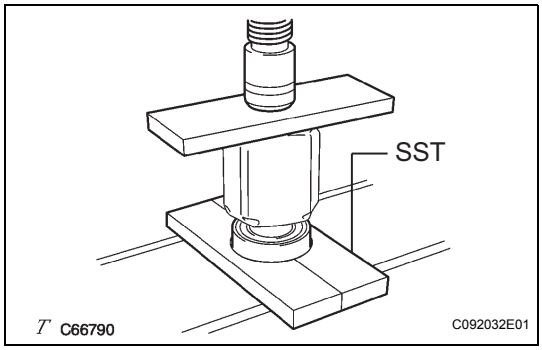

REASSEMBLY

1. INSTALL FRONT DRIVE SHAFT BEARING

(a) Install a new bearing bracket hole snap ring to the front driver shaft assembly RH.

(b) Using SST and a steel plate, install a new front drive shaft bearing.

SST 09527-30010, 09527-10011

NOTICE:

Bearing should be completely installed.

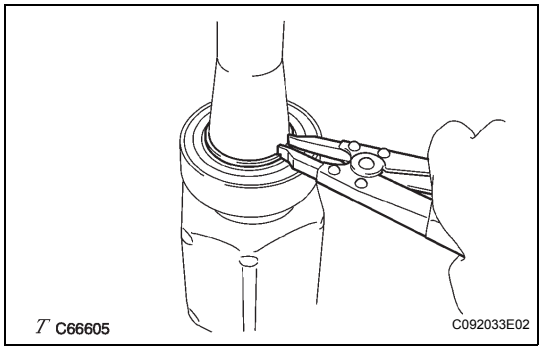

(c) Using a snap ring expander, install a new drive shaft hole snap ring.

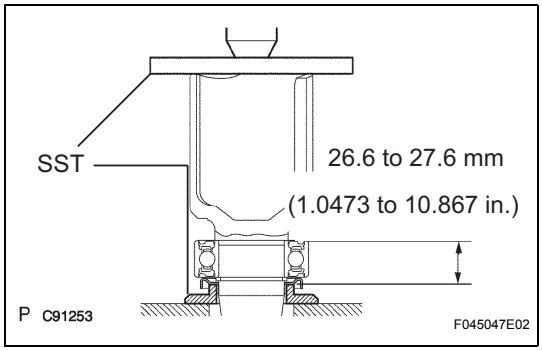

2. INSTALL FRONT DRIVE SHAFT DUST COVER

(a) Using SST and a press, install a new drive shaft dust cover.

SST 09726-40010, 09527-10011

NOTICE:

- **Dust cover should be completely installed.**
- **Be careful not to damage the dust cover.**

DS

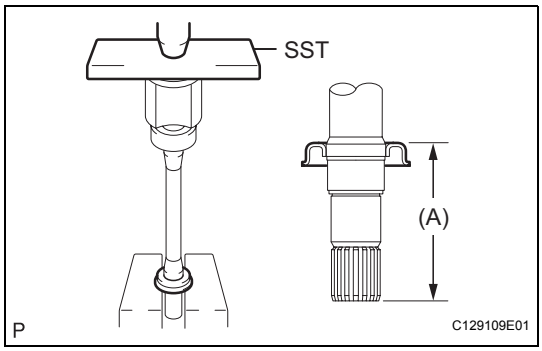

3. INSTALL FRONT DRIVE SHAFT DUST COVER RH

(a) Using SST and a press, install a new drive shaft dust cover RH until the distance from the tip of the center drive shaft to the drive shaft dust cover RH meets the specification, as shown in the illustration.

SST 09527-10011

Distance (A) :

110.0 to 111.0 mm (4.3307 to 4.3701 in.)

NOTICE:

- **Dust cover should be completely installed.**
- **Be careful not to damage the dust cover.**

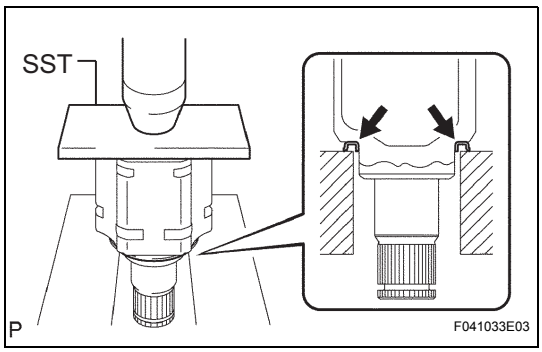

4. INSTALL FRONT DRIVE SHAFT DUST COVER LH

(a) Using SST and a press, install a new drive shaft dust cover LH.

SST 09527-10011

NOTICE:

- **Dust cover should be completely installed.**
- **Be careful not to damage the dust cover.**

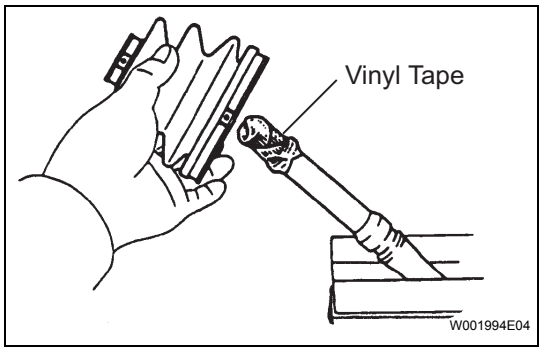

5. INSTALL OUTBOARD JOINT BOOT

(a) Hold the drive shaft lightly in a vise between aluminium plates.
HINT:
Before installing the boots, wrap the spline of the drive shaft with vinyl tape to prevent the boots from being damaged.

(b) Temporarily install a new outboard joint boot to the drive shaft with 2 clamps.

(c) Pack the outboard joint shaft and boot with grease.
Grease capacity:
120 to 140 g (4.2 to 4.9 oz.)

6. INSTALL FRONT AXLE OUTBOARD JOINT BOOT CLAMP

(a) Hold the drive shaft lightly in a vise between aluminium plates.

(b) Install the 2 outboard joint boot clamps onto the boot.

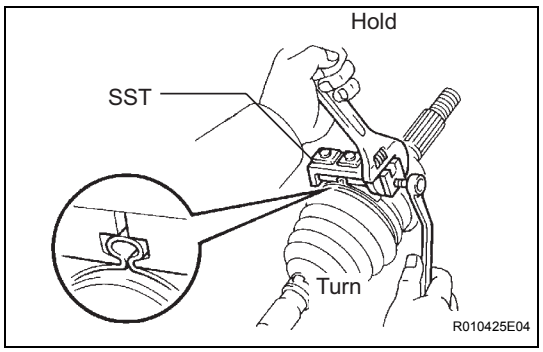

(c) Place SST onto the outboard joint large boot clamp.
SST 09521-24010

(d) Tighten the SST so that the outboard joint large boot clamp is pinched.
NOTICE:
Do not overtighten the SST.

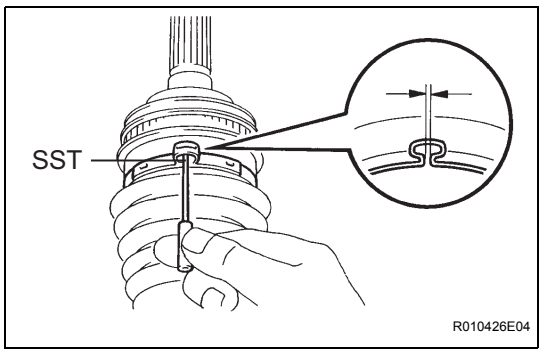

(e) Using SST, measure the clearance of the outboard joint large boot clamp.
SST 09240-00020
Clearance:
1.2 to 4.0 mm (0.0472 to 0.1575 in.)
NOTICE:
When the measured value is greater than the specified value, retighten the clamp.

(f) Install the outboard joint small boot clamp using the same procedures.

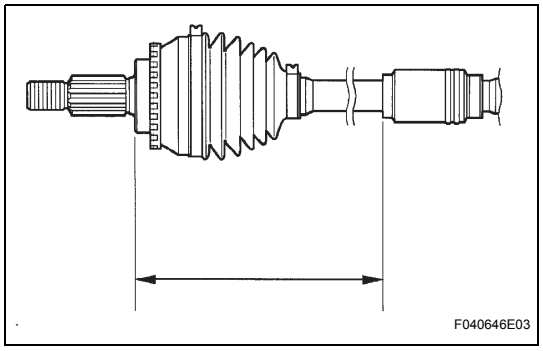

7. INSTALL FRONT DRIVE SHAFT DAMPER LH

(a) Install the drive shaft damper LH to the drive shaft.

(b) Make sure that the damper is on the shaft groove.

(c) Set the distance, as specified below.
Distance:
204.5 to 208.5 mm (8.051 to 8.209 in.)

DS

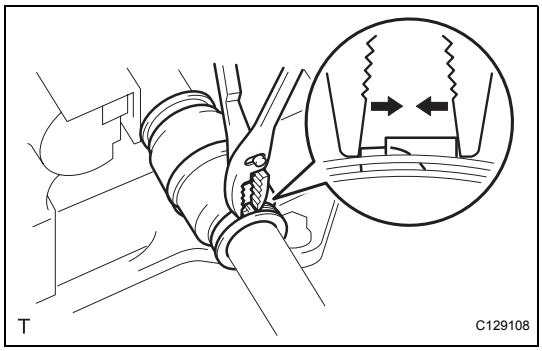

(d) Using pliers, install a new drive shaft damper clamp, as shown in the illustration.

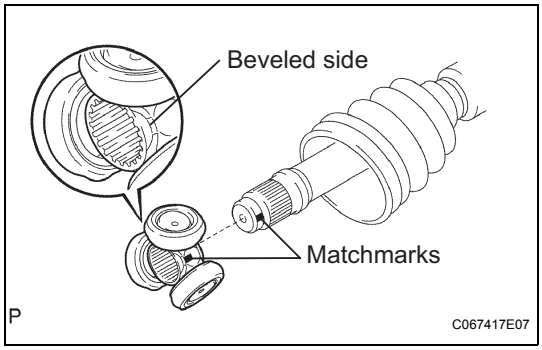

8. INSTALL FRONT DRIVE INBOARD JOINT ASSEMBLY LH

(a) Temporarily install a new inboard joint boot with 2 clamps to the drive shaft.

(b) Place the beveled side of the tripod joint axial spline toward the outboard joint shaft.

(c) Align the matchmarks.

(d) Using a brass bar and hammer, tap in the tripod joint to the outboard joint shaft.

NOTICE:

- **Do not tap the roller.**
- **Be sure to install the tripod joint assembly in the correct direction.**

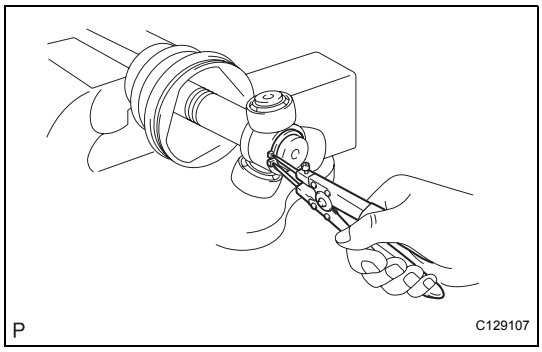

(e) Using a snap ring expander, install a new shaft snap ring.

(f) Pack the outboard joint shaft and boot with grease.

Grease capacity:
190 to 210 g (6.7 to 7.4 oz.)

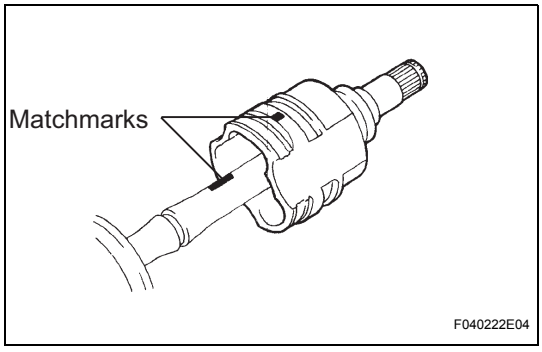

(g) Align the matchmarks and install the inboard joint assembly to the outboard joint shaft assembly.

9. INSTALL FRONT AXLE INBOARD JOINT BOOT

(a) Install the inboard joint boot to the inboard joint assembly.

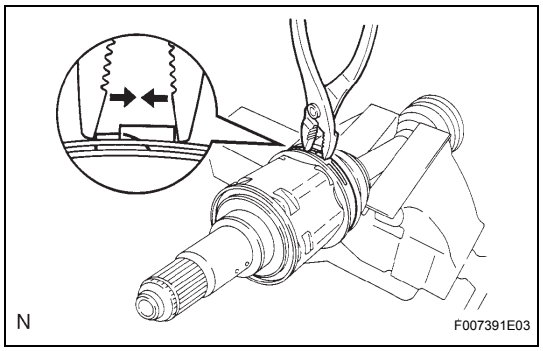

10. INSTALL FRONT AXLE INBOARD JOINT BOOT CLAMP

(a) Using pliers, install the new inboard joint boot LH No.2 clamp and inboard joint boot LH clamp, as shown in the illustration.

11. INSTALL FRONT DRIVE INNER SHAFT OUTER LH SHAFT SNAP RING

(a) Install a new hole snap ring.

INSTALLATION

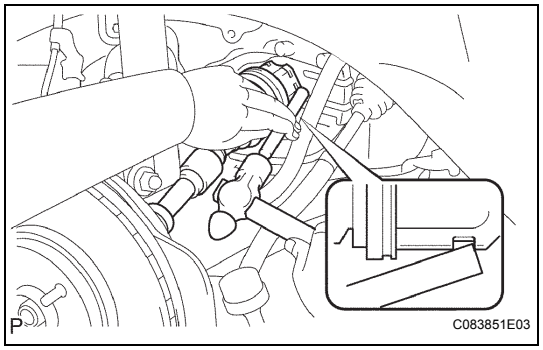

1. INSTALL FRONT DRIVE SHAFT ASSEMBLY LH

(a) Coat the spline of the inboard joint shaft assembly with ATF.

(b) Align the shaft splines and install the drive shaft assembly LH with a brass bar and hammer.

NOTICE:

- **Set the shaft snap ring with the opening side facing down.**
- **Be careful not to damage the drive shaft dust cover, boot and oil seal.**
- **Move the drive shaft assembly while keeping it level.**

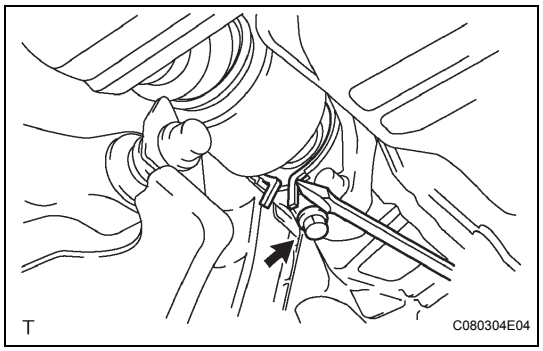

2. INSTALL FRONT DRIVE SHAFT ASSEMBLY RH

(a) Coat the spline of the inboard joint shaft assembly with ATF.

(b) Install the front drive shaft the assembly RH.

(c) Using a screwdriver, install a new bearing bracket hole snap ring.

NOTICE:

- **Do not damage the boot and oil seal.**
- **Move the drive shaft assembly while keeping it level.**

(d) Install a new bolt.

Torque: 32 N*m (330 kgf*cm, 24 ft.*lbf)

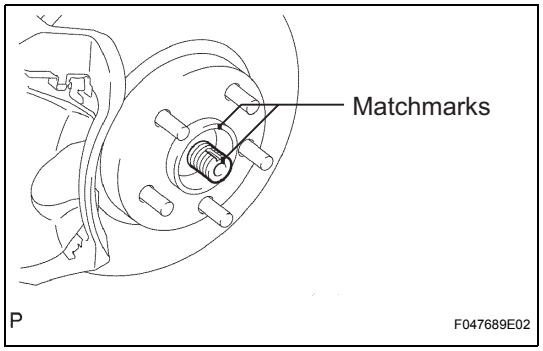

3. INSTALL FRONT AXLE ASSEMBLY LH

(a) Align the matchmarks and install the front drive shaft assembly LH to the front axle hub sub-assembly LH.

NOTICE:

Be careful not to damage the drive shaft boot and speed sensor rotor.

DS

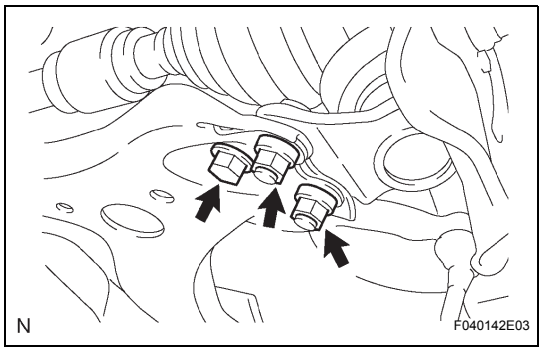

4. INSTALL FRONT SUSPENSION ARM SUB-ASSEMBLY NO.1 LH

(a) Install the lower ball joint to the front suspension arm sub-assembly lower No.1 LH with the bolt and 2 nuts.
Torque: 75 N*m (765 kgf*cm, 55 ft.*lbf)

5. INSTALL TIE ROD END SUB-ASSEMBLY LH

(a) Install the tie rod end sub-assembly LH to the steering knuckle with the nut.
Torque: 49 N*m (500 kgf*cm, 36 ft.*lbf)

(b) Install a new cotter pin.
NOTICE:
If the holes for the cotter pin are not aligned, tighten the nut up to 60°further.

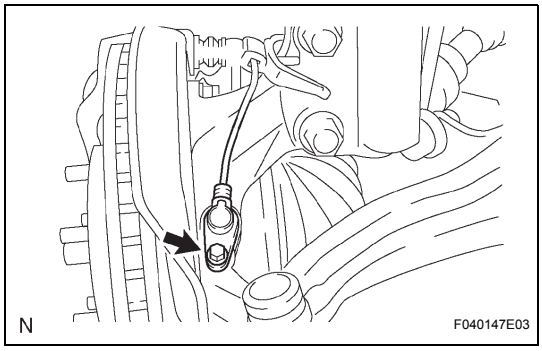

6. INSTALL SPEED SENSOR FRONT LH

(a) Install the speed sensor front LH to the steering knuckle with the bolt.
Torque: 8.0 N*m (82 kgf*cm, 71 in.*lbf)
NOTICE:
- **Prevent foreign matter from adhering to the speed sensor.**
- **Be careful not to damage the speed sensor.**

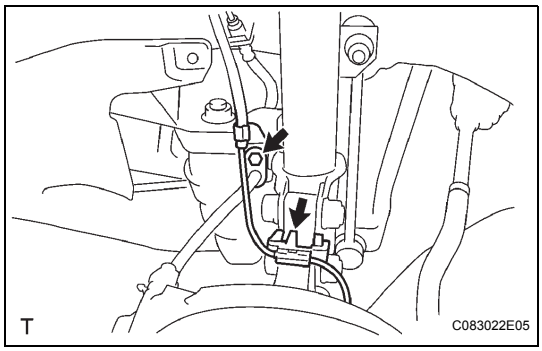

(b) Install the flexible hose and the speed sensor to the shock absorber with the bolt and set the sensor clip on the knuckle.
Torque: 19 N*m (192 kgf*cm, 14 ft.*lbf)
NOTICE:
- **Be careful not to damage the speed sensor.**
- **Prevent foreign matter from adhering to the speed sensor.**
- **Do not twist the sensor wire when installing the speed sensor.**

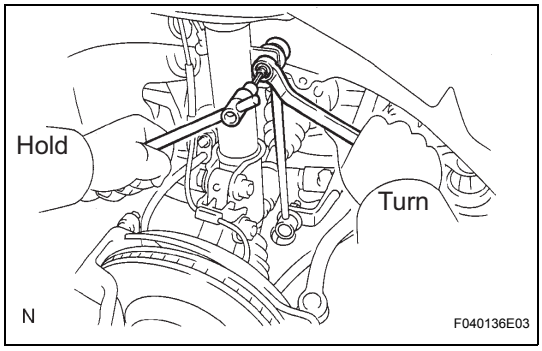

7. INSTALL FRONT STABILIZER LINK ASSEMBLY LH

(a) Install the stabilizer link assembly LH with the nut.
Torque: 74 N*m (755 kgf*cm, 55 ft.*lbf)
HINT:
If the ball joint turns together with the nut, use a hexagon wrench (6 mm) to hold the stud.

DS

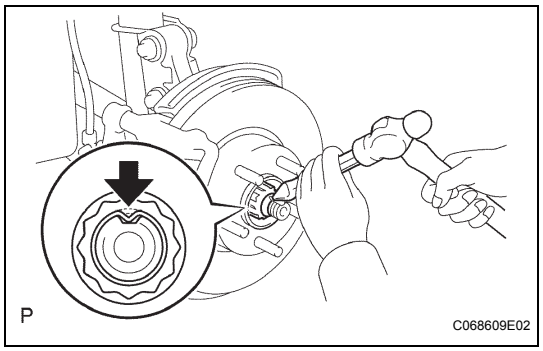

8. **INSTALL FRONT AXLE HUB LH NUT**
   (a) Using a socket wrench (30 mm), install a new axle hub LH nut.
   Torque: 294 N*m (3,000 kgf*cm, 217 ft.*lbf)
   (b) Using a chisel and hammer, stake the front axle hub LH nut.

9. **INSTALL FRONT WHEEL**
   Torque: 103 N*m (1,050 kgf*cm, 76 ft.*lbf)

10. **ADD AUTOMATIC TRANSAXLE FLUID**

11. **INSPECT AUTOMATIC TRANSAXLE FLUID (See page AX-120)**

12. **INSPECT AND ADJUST FRONT WHEEL ALIGNMENT**
   (a) Inspect and adjust front wheel alignment (See page SP-4).

13. **INSTALL ENGINE UNDER COVER LH**

14. **CHECK ABS SPEED SENSOR SIGNAL**
   (a) ABS WITH EBD & TRAC & VSC SYSTEM (See page BC-107)
   (b) ABS WITH EBD SYSTEM (See page BC-11)

EMISSION CONTROL SYSTEM

PARTS LOCATION

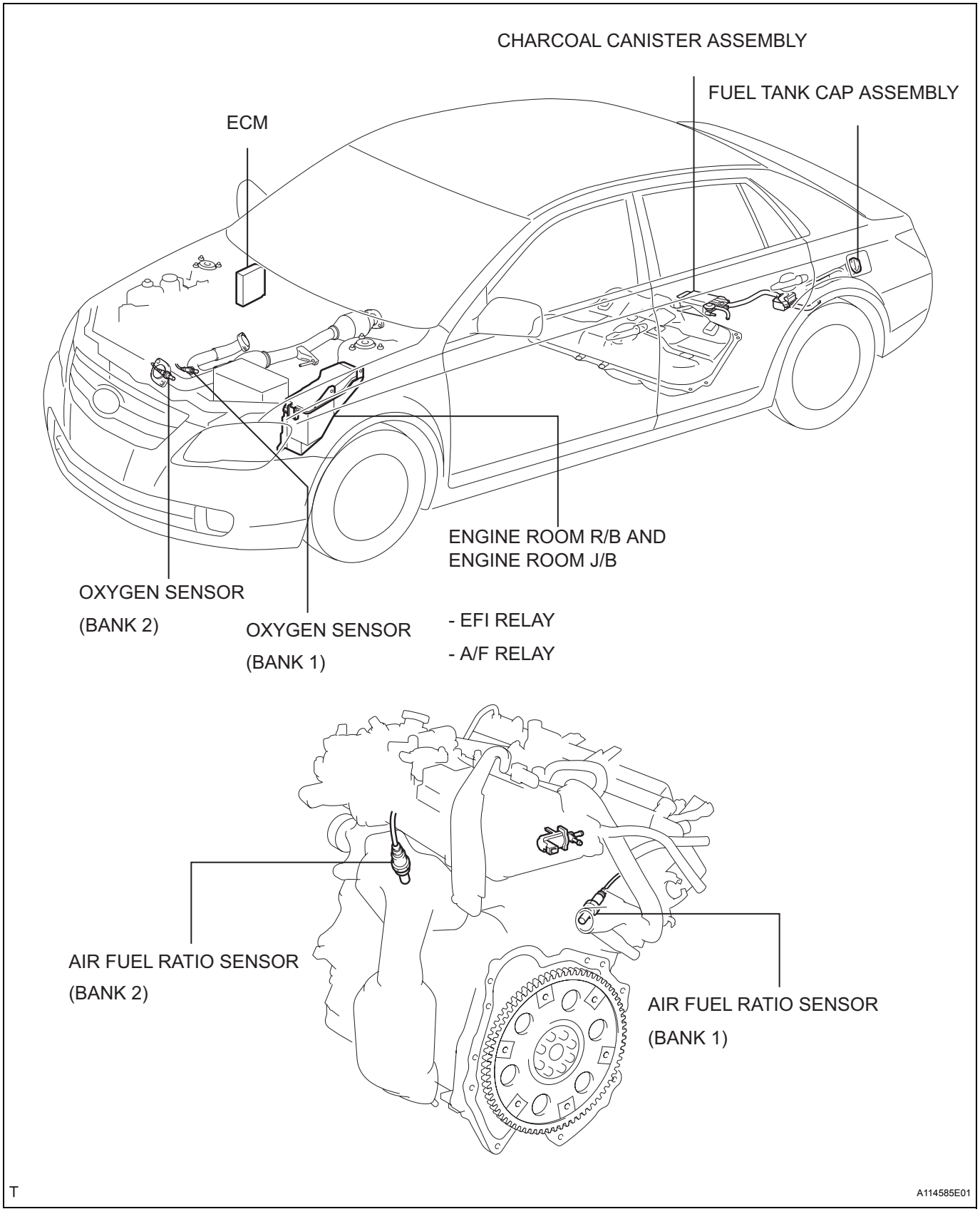

EC

SYSTEM DIAGRAM

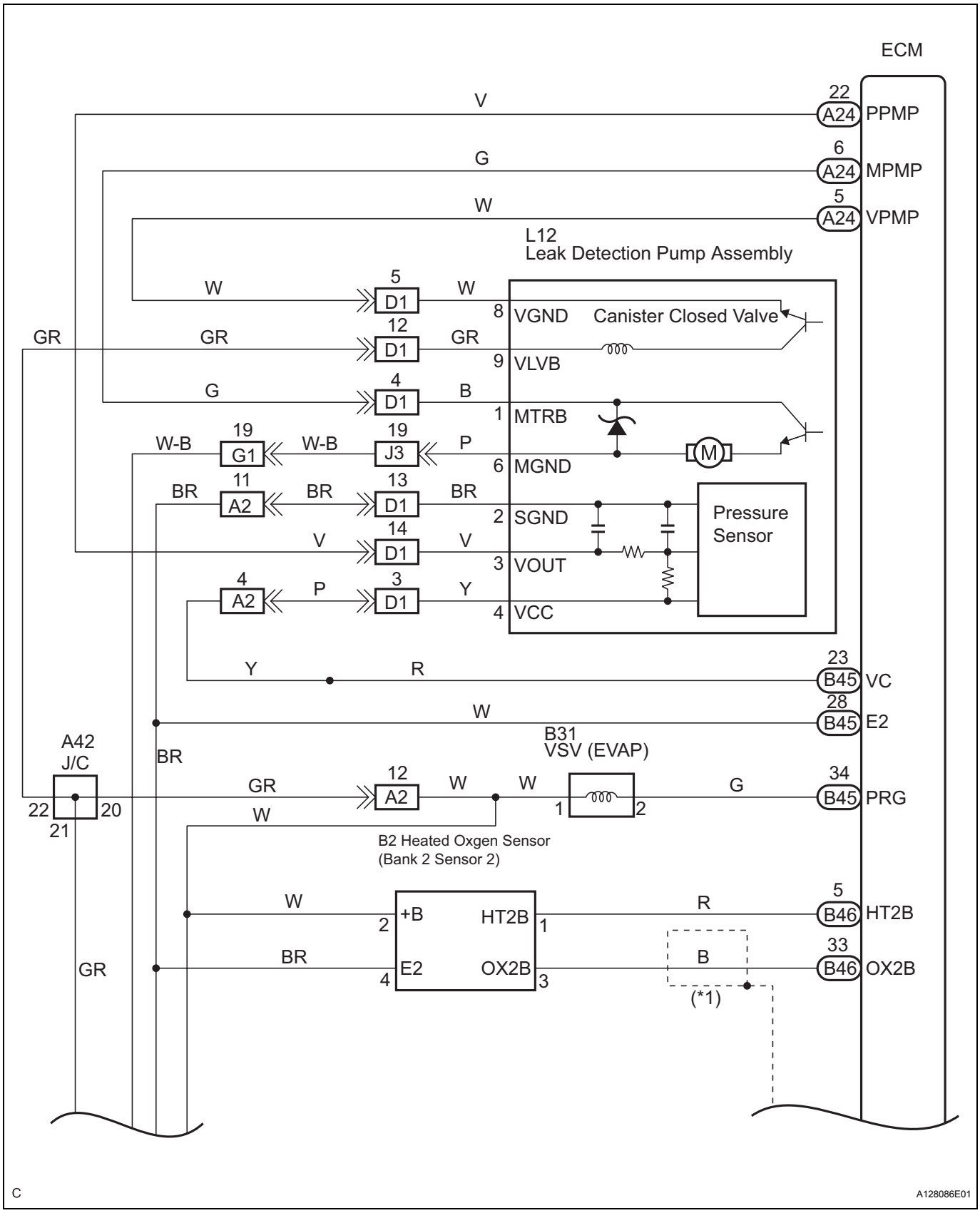

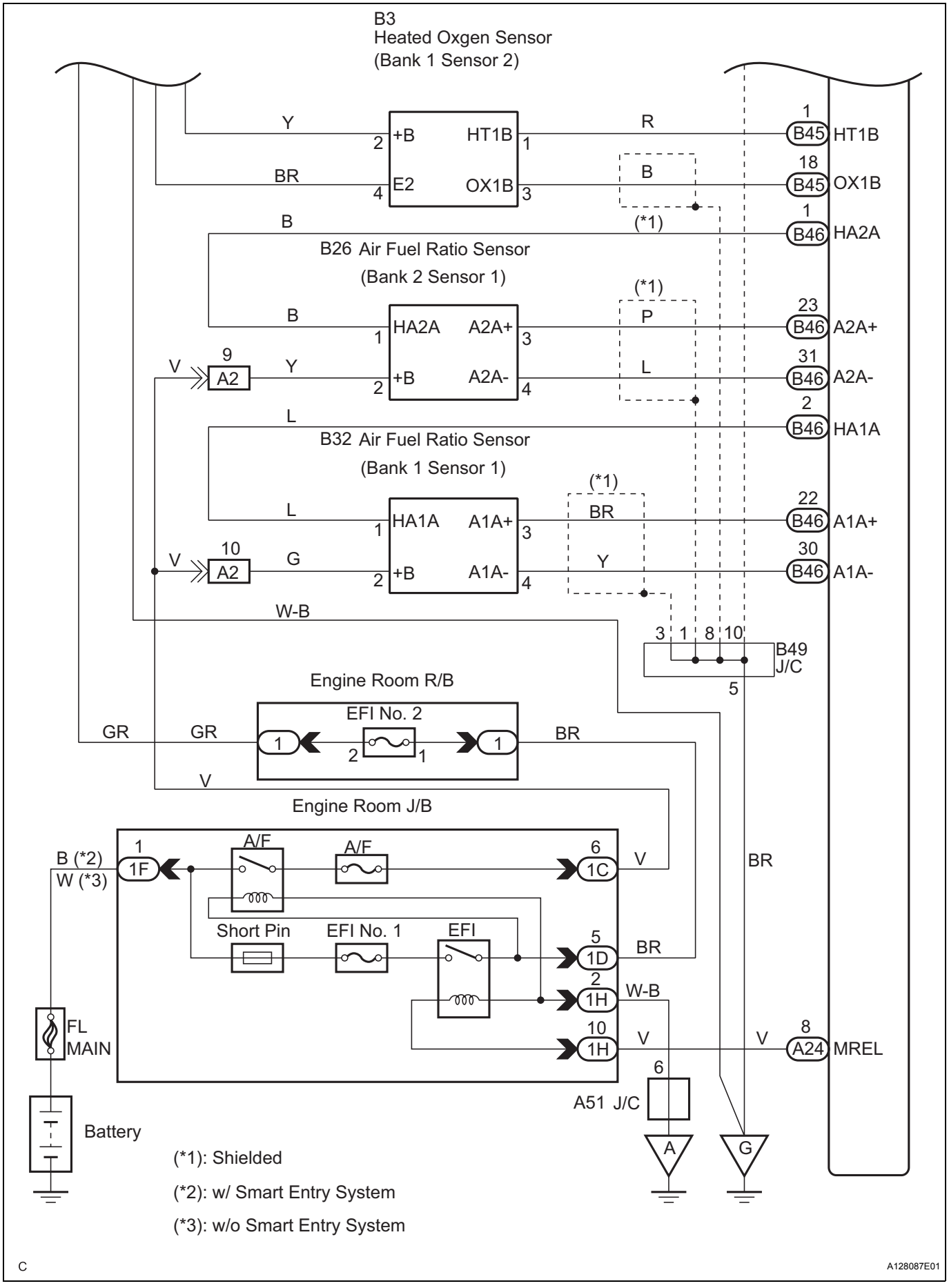
B3
Heated Oxgen Sensor
(Bank 1 Sensor 2)
Y
BR
2 +B
4 E2
HT1B 1
OX1B 3
R
B
1 B45 HT1B
18 B45 OX1B
B
(*1)
1 B46 HA2A
B26 Air Fuel Ratio Sensor
(Bank 2 Sensor 1)
(*1)
B
1 HA1A
HA2A A2A+ 3
+B A2A- 4
2
P
L
23 B46 A2A+
31 B46 A2A-
V
9 A2
Y
2 B46 HA1A
B32 Air Fuel Ratio Sensor
(Bank 1 Sensor 1)
(*1)
L
1 HA1A
A1A+ 3
+B A1A- 4
BR
Y
22 B46 A1A+
30 B46 A1A-
V
10 A2
G
W-B
3 1 8 10 B49 J/C
5
Engine Room R/B
EFI No. 2
GR
GR
1
2
1
1
BR
V
Engine Room J/B
B (*2)
W (*3)
1 1F
A/F
A/F
6 1C
V
BR
Short Pin
EFI No. 1
EFI
5 1D
BR
2 1H
W-B
10 1H
V
V
8 A24 MREL
FL
MAIN
6
A51 J/C
A
G
Battery
(*1): Shielded
(*2): w/ Smart Entry System
(*3): w/o Smart Entry System
C
A128087E01

EC

ON-VEHICLE INSPECTION

1. INSPECT FUEL CUT-OFF RPM

(a) Increase the engine speed to at least 3,500 rpm.

(b) Use a sound scope to check for injector operating sounds.

(c) Check that when the throttle lever is released, injector operation sounds stop momentarily (at 2,500 rpm) and then resume (at 1,400 rpm).

Standard

Item	Specified Condition
Fuel cut off rpm	2,500 rpm
Fuel return rpm	1,400 rpm

2. INSPECT EVAP SYSTEM LINE

(a) Warm up the engine to normal operating temperature and stop the engine.

(b) Install a vacuum gauge (EVAP control system test equipment vacuum gauge) into the EVAP service port on the purge line.

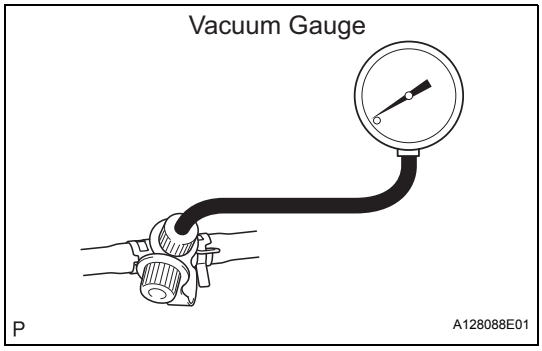

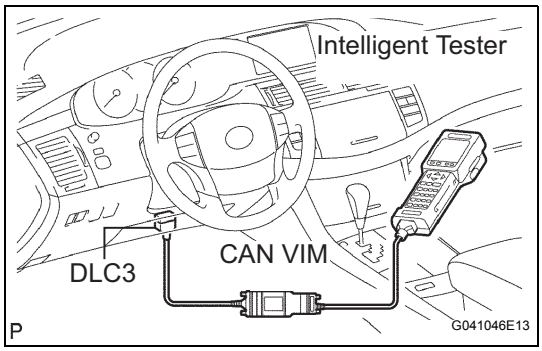

(c) When using an intelligent tester:
Operation of the VSV for EVAP.

(1) Connect an intelligent tester to the Controller Area Network Vehicle Interface Module (CAN VIM). Then connect the CAN VIM to the Date Link Connector 3 (DLC3).

(2) Start the engine.

(3) Turn the intelligent tester on.

(4) Enter the following menus: DIAGNOSIS / ENHANCED OBDII / ACTIVE TEST / EVAP VAV (ALONE)

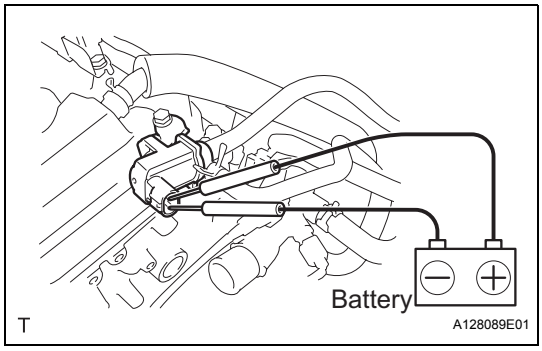

(d) When not using an intelligent tester:
Operation of the VSV for EVAP.

(1) Disconnect the VSV for EVAP connector.

(2) Connect leads from the positive (+) and negative (-) battery terminals to the VSV for EVAP terminals.

(3) Start the engine.

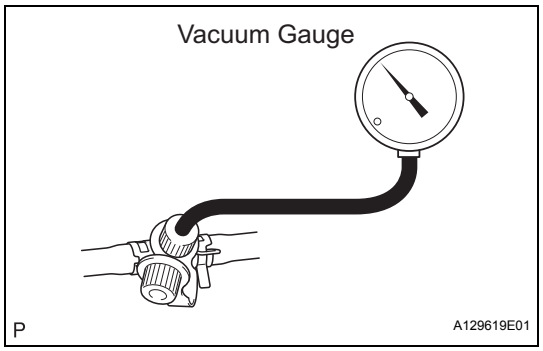

(e) Check the vacuum when the engine idles.
Vacuum:
Maintain between 0.368 and 19.713 in.Hg (5 to 268 in.Aq) for over 5 seconds.
HINT:
If the vacuum does not change, the hose connecting the VSV and the service port is loose or blocked, or the VSV is malfunctioning.

(f) When using an intelligent tester:
Conclude operation of the VSV for EVAP.
(1) Stop the engine.
(2) Disconnect the intelligent tester from the DLC3.

(g) When not using an intelligent tester:
Conclude operation of the VSV for EVAP.
(1) Stop the engine.
(2) Disconnect the positive (+) and negative (-) leads of the battery from the VSV for EVAP terminals.
(3) Connect the VSV for EVAP connector.

(h) Disconnect the vacuum gauge from the EVAP service port on the purge line.

(i) Connect a pressure gauge to the EVAP service port on the purge line.

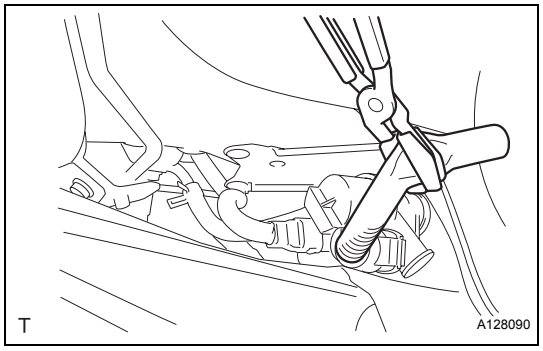

(j) Check the pressure.
(1) Prepare a rubber hose that has an inside diameter of 15 to 18.5 mm.
(2) Disconnect the atmospheric side hose of the pump module.
(3) Connect the prepared rubber hose to the pump module, and pinch the rubber hose with the clip to prevent air from entering into the canister passage.

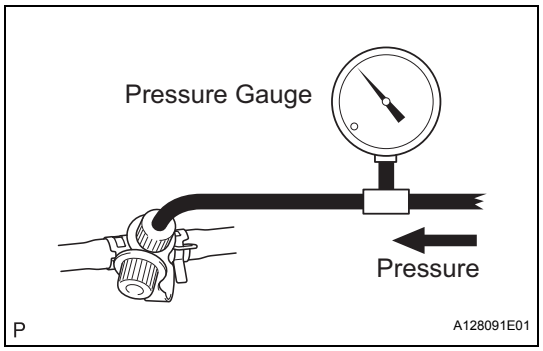

(4) Apply pressure (13.5 to 15.5 in.Aq, 0.99 to 1.14 in.Hq) from the EVAP service port.
Pressure:
The gauge should still read over 7.7 to 8.8 in.Aq (0.57 to 0.65 in.Hq) for 2 minutes after the pressure is applied.
HINT:
If the pressure cannot be applied, the hose connecting the VSV, charcoal canister and fuel tank has slipped off or the VSV is open.

EC

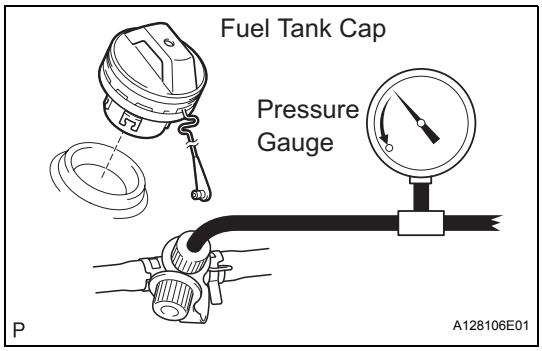

(5) Check if the pressure decreases when the fuel tank cap is removed while applying pressure.
HINT:
If the pressure does not decrease when the filler cap is removed, the hose connecting the service port and the fuel tank may be blocked.

(k) Disconnect the pressure gauge from the EVAP service port on the purge line.

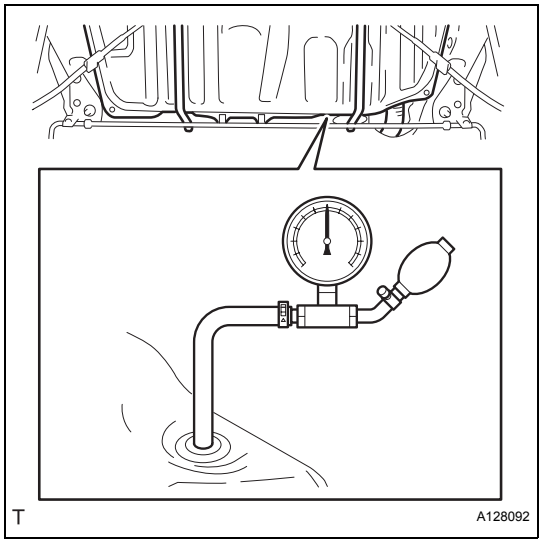

3. CHECK AIR TIGHTNESS IN FUEL TANK AND FILLER PIPE

(a) Disconnect the vent line hose from the fuel tank.
(b) Connect the pressure gauge to the fuel tank.
(c) Apply pressure to the fuel tank to create an internal pressure of 4 kPa (41 gf/cm^2, 0.58 psi).
(d) Check that the internal pressure of the fuel tank is maintained for 1 minute.
(e) Check the connected portions of each hose and pipe.
(f) Check the installed parts on the fuel tank.
If any malfunctions, damage or other problems are found, replace the fuel tank and filler pipe.
(g) Reconnect the vent line hose to the fuel tank.

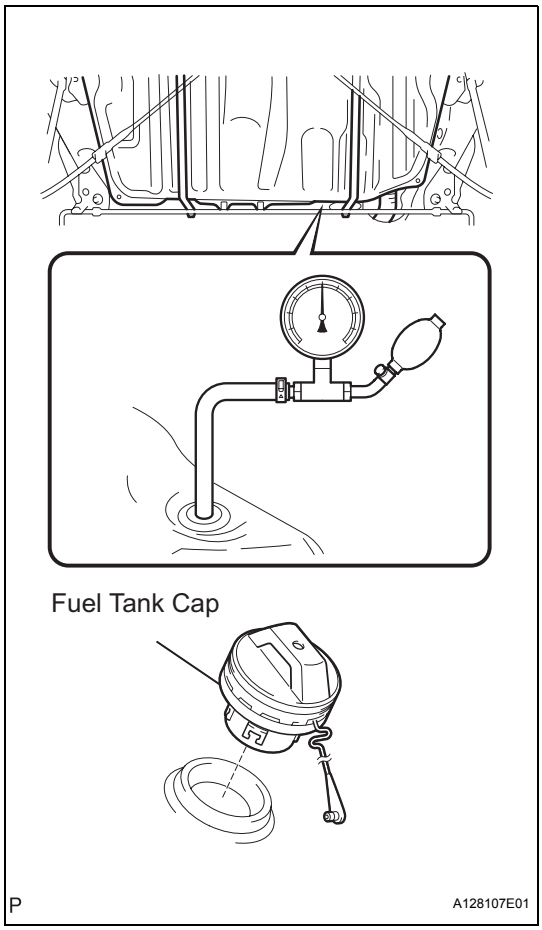

4. INSPECT FUEL CUT OFF VALVE AND FUEL CHECK VALVE

(a) Disconnect the vent line hose from the fuel tank.
(b) Connect the pressure gauge to the fuel tank.
(c) Fill the fuel tank with fuel.
(d) Apply pressure of 4 kPa (41 gf/cm^2, 0.58 psi) to the vent port of the fuel tank.
HINT:
Check the amount of fuel in the fuel tank. When the fuel tank is full, the float valve of the fill check valve is closed and no air can pass through.
(e) Remove the fuel tank cap, and check that the pressure drops.
If the pressure does not drop, replace the fuel tank assembly.
(f) Reconnect the vent line hose to the fuel tank.

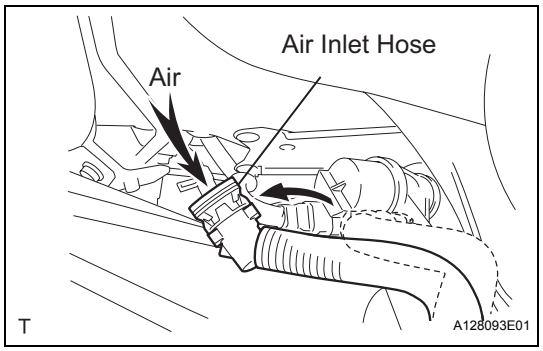

5. CHECK AIR INLET LINE

(a) Disconnect the air inlet line hose from the charcoal canister.

(b) Check that air can flow freely into the air inlet line.
If air cannot flow freely into the air inlet line, repair or replace it.

(c) Reconnect the air inlet line hose to the charcoal canister.

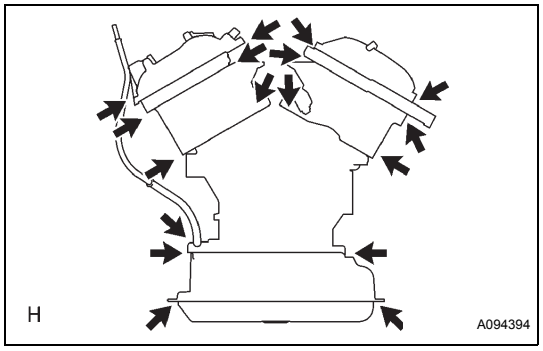

6. VISUALLY INSPECT HOSES, CONNECTIONS AND GASKETS

(a) Check for cracks, leaks or damage.
HINT:
Removal or problems with the engine oil dipstick, oil filler cap, PCV hose and other components may cause the engine to run improperly. Disconnection, looseness or cracks in the parts of the air induction system between the throttle body and cylinder head will allow air suction and cause the engine to run improperly.
If necessary, replace any damaged parts.

EC

INSPECTION

1. INSPECT VENTILATION VALVE SUB-ASSEMBLY

(a) Install a clean hose to the ventilation valve.

(b) Check ventilation valve operation.

(1) Blow air into the cylinder head side, and check that air passes through easily.
CAUTION:
Do not suck air through the valve.
Petroleum substances inside the valve are dangerous to your health.

(2) Blow air into the intake manifold side, check that air passes through with difficulty.
If operation is not as specified, replace the ventilation valve.

(c) Remove the clean hose from the ventilation valve.

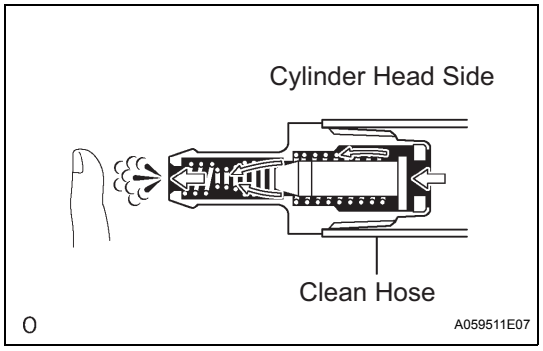

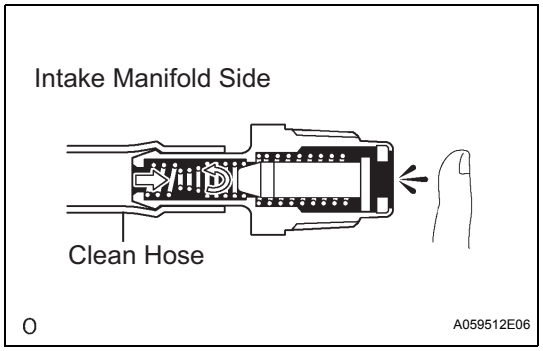

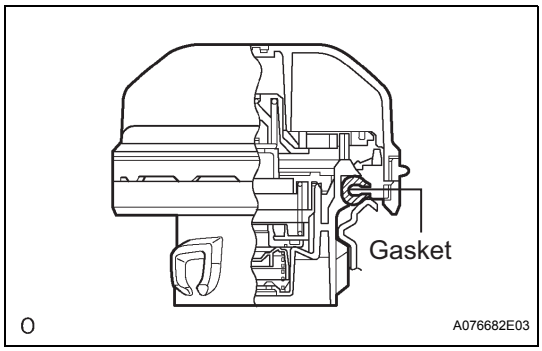

2. INSPECT FUEL TANK CAP ASSEMBLY

(a) Visually check if the cap and gasket are deformed or damaged.

CANISTER

COMPONENTS

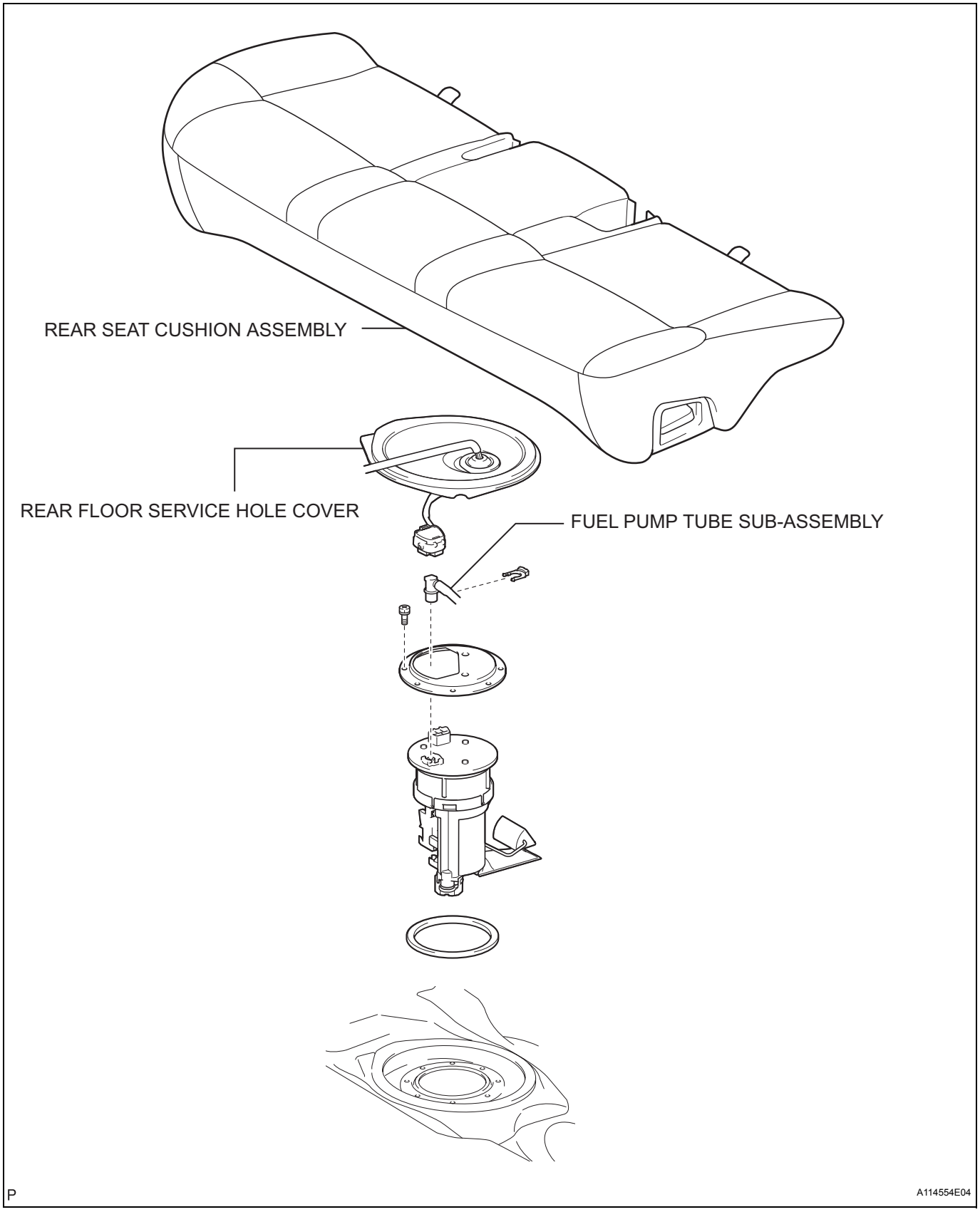

EC

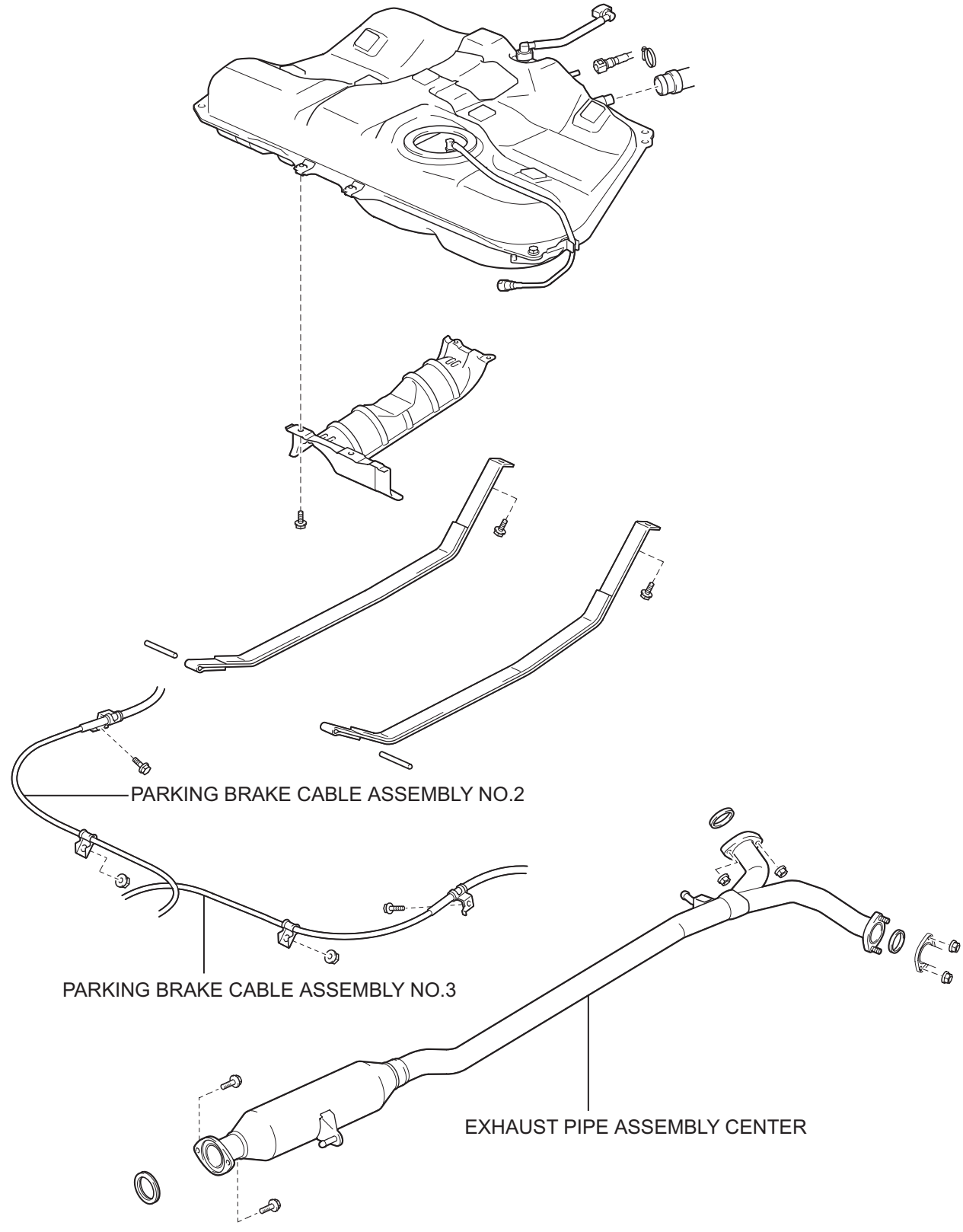

P

A133817E01

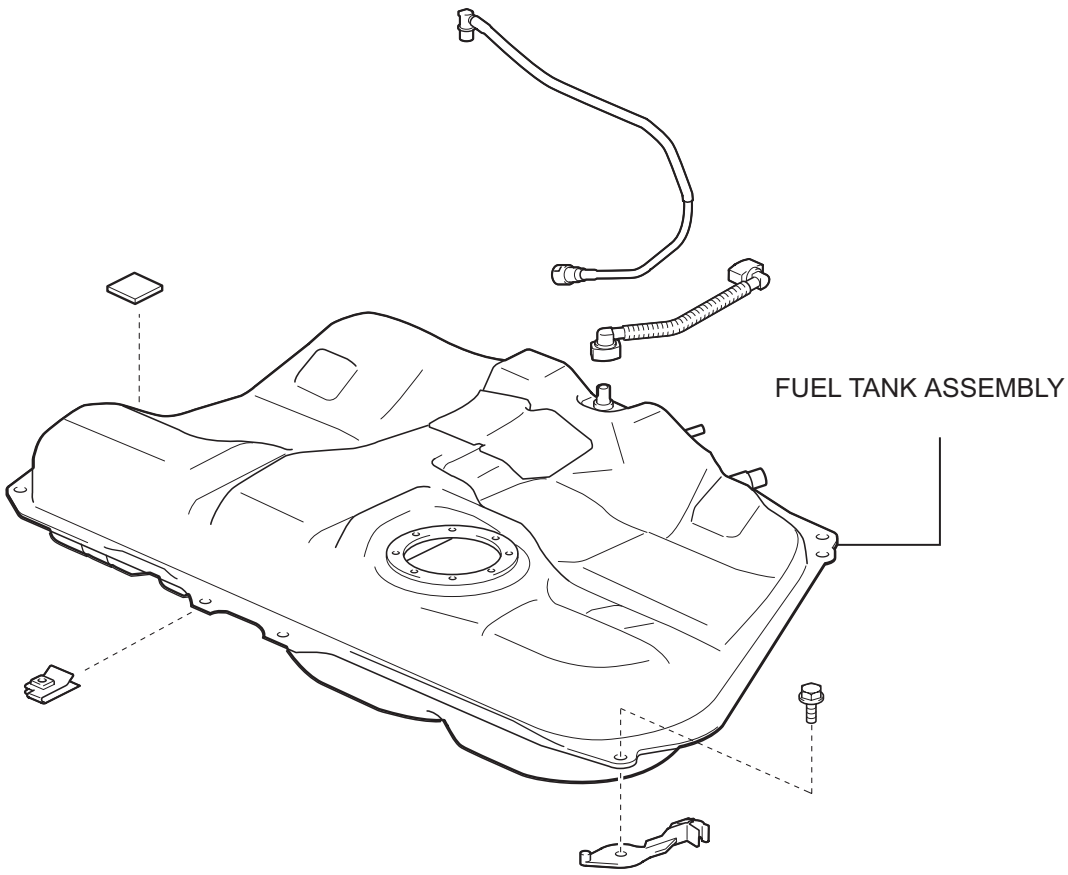
FUEL TANK ASSEMBLY
P
A109012E07

CHARCOAL CANISTER ASSEMBLY

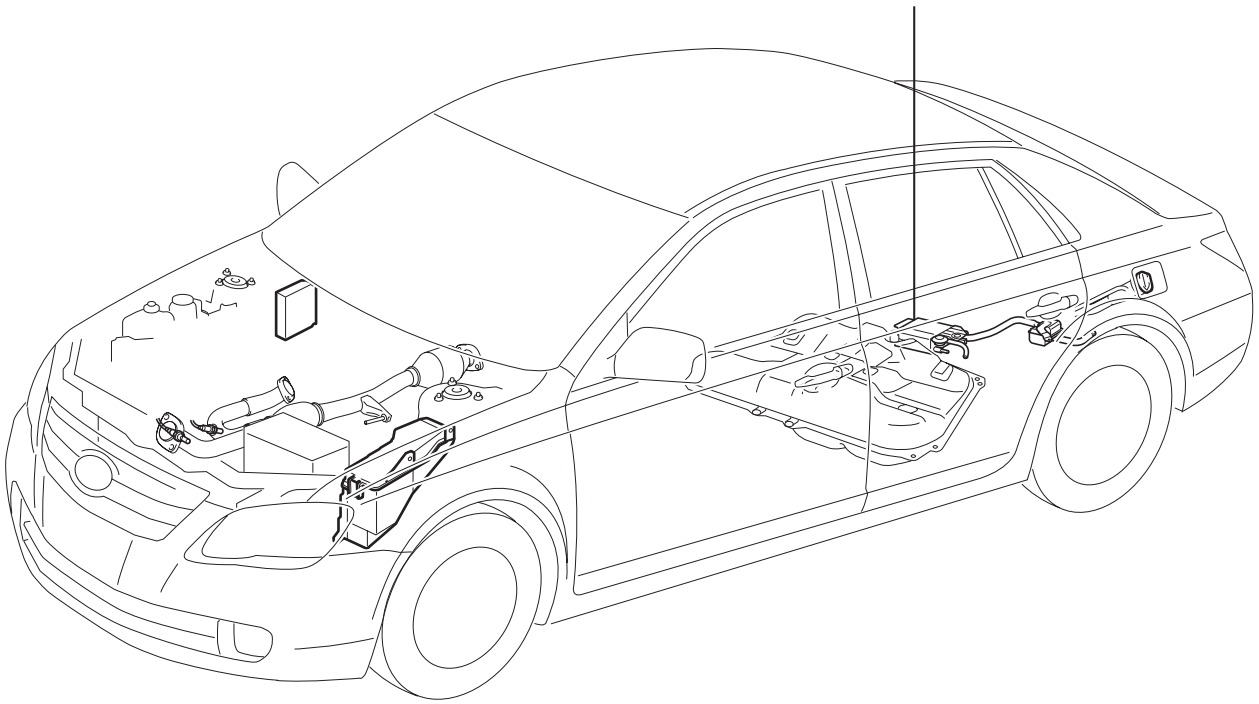

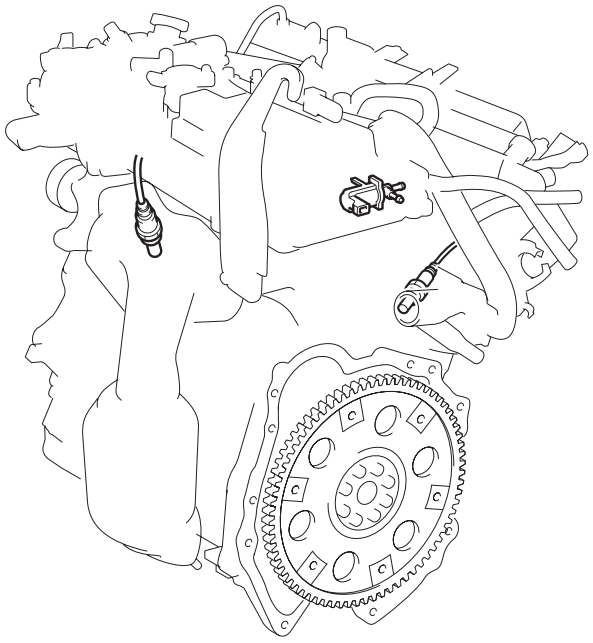

EC

T

A114585E02

REMOVAL

1. **PREVENT GASOLINE FROM SPILLING OUT**
2. **DISCONNECT CABLE FROM NEGATIVE BATTERY TERMINAL**
3. **REMOVE REAR SEAT CUSHION ASSEMBLY (See page SE-68)**
4. **REMOVE REAR FLOOR SERVICE HOLE COVER (See page FU-26)**
5. **SEPARATE FUEL PUMP TUBE SUB-ASSEMBLY (See page FU-26)**
6. **DRAIN FUEL**
7. **REMOVE EXHAUST PIPE ASSEMBLY CENTER**
8. **DISCONNECT PARKING BRAKE CABLE ASSEMBLY NO.2 (See page FU-35)**
9. **DISCONNECT PARKING BRAKE CABLE ASSEMBLY NO.3 (See page FU-35)**
10. **REMOVE FUEL TANK ASSEMBLY (See page FU-35)**
11. **REMOVE CHARCOAL CANISTER ASSEMBLY**
    (a) Disconnect the fuel tank vent hose from the charcoal canister.
    (1) Push the connector deep inside.
    (2) Pinch portion A.
    (3) Pull out the connector.

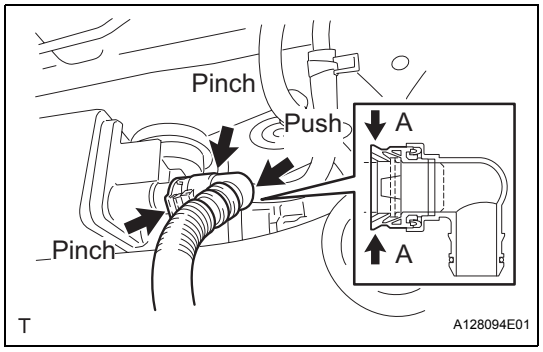

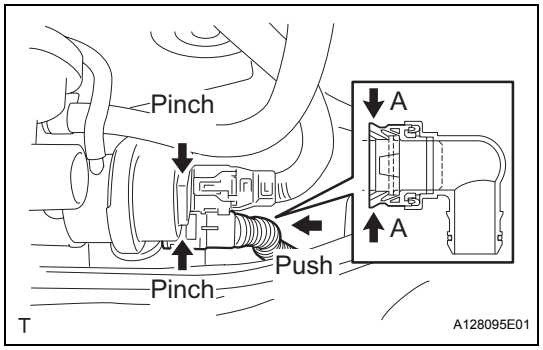

(b) Disconnect the charcoal canister filter sub-assembly from the charcoal canister.
(1) Push the connector deep inside.
(2) Pinch portion A.
(3) Pull out the connector.
(c) Disconnect the vapor pressure sensor connector.
(d) Disconnect the wire harness clamp.
(e) Disconnect the purge line hose from the charcoal canister.

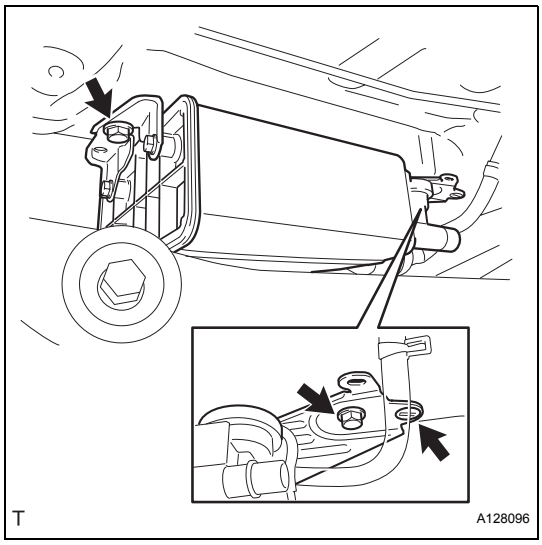

(f) Remove the 2 bolts, clip and charcoal canister.

INSPECTION

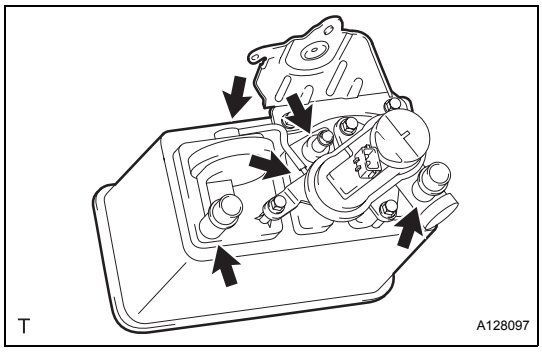

1. INSPECT CHARCOAL CANISTER ASSEMBLY

(a) Visually check the charcoal canister for cracks or damage.
If cracks or damage are found, replace the charcoal canister assembly.

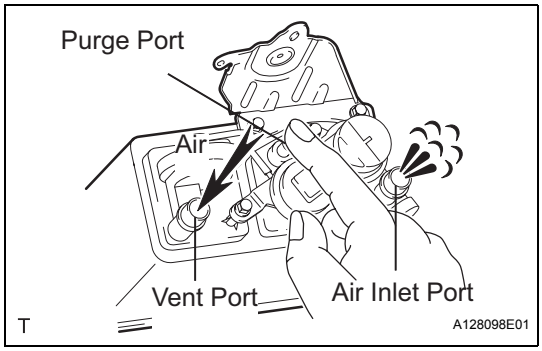

(b) Check charcoal canister operation.
(1) With the purge port closed, blow 1.67 kPa (17.0 gf/cm^2, 0.24 psi) of air into the vent port, and check that air flows from the air inlet port.
If the result is not as specified, replace the charcoal canister assembly.

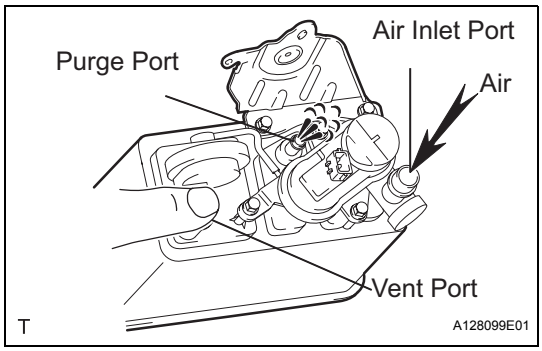

(2) With the vent port closed, blow 1.10 kPa (11.2 gf/cm^2, 0.16 psi) air to the air inlet port, and check that air flows from the purge port.
If the result is not as specified, replace the charcoal canister assembly.

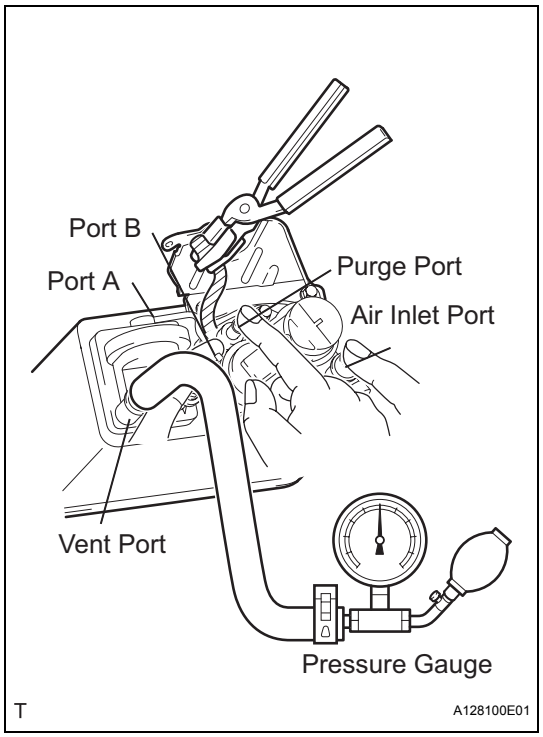

(c) Check for air leakage.
(1) Remove the air hose between ports A and B.
(2) Connect the pressure gauge to the vent port of the charcoal canister.
SST 09992-00242
(3) While holding port B, with the purge port and the air inlet port closed and port A open, apply pressurized air 19.6 kPa (0.2 kgf/cm^2, 2.81 psi) into the vent port, then confirm that the pressure is retained for 1 minute.
If the result is not as specified, replace the charcoal canister assembly.

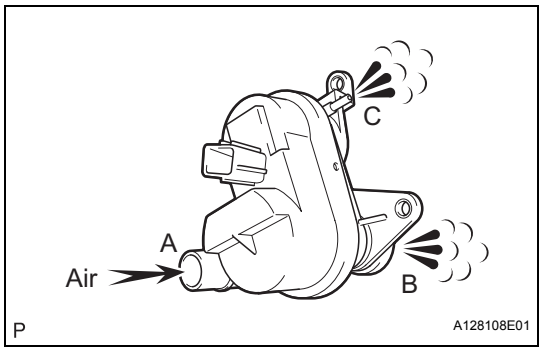

(d) Check the leak detection pump.
(1) Remove the detection pump from the charcoal canister.
(2) Check that air flows from port A to B and then C.
If the result is not as specified, replace the charcoal canister assembly.

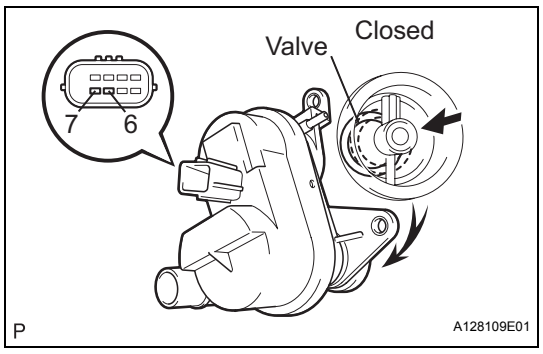

(3) Connect the positive (+) lead to terminal 7 and the negative (-) lead to terminal 6.
(4) Check that the valve is closed.
If the result is not as specified, replace the charcoal canister assembly.
(5) Install the detection pump.

EC

INSTALLATION

1. **INSTALL CHARCOAL CANISTER ASSEMBLY**
   (a) Install the 2 bolts, clip and charcoal canister.
   Torque: 36 N*m (367 kgf*cm, 27 ft.*lbf)
   (b) Connect the purge line hose to the charcoal canister.
   (c) Connect the wire harness clamp.
   (d) Connect the vapor pressure sensor connector.
   (e) Connect the charcoal canister filter sub-assembly to the charcoal canister.
   (f) Connect the fuel tank vent hose to the charcoal canister.
2. **INSTALL FUEL TANK ASSEMBLY (See page FU-38)**
3. **INSTALL PARKING BRAKE CABLE ASSEMBLY NO.3 (See page FU-40)**
4. **INSTALL PARKING BRAKE CABLE ASSEMBLY NO.2 (See page FU-40)**
5. **INSTALL EXHAUST PIPE ASSEMBLY CENTER**
6. **CONNECT FUEL PUMP TUBE SUB-ASSEMBLY**
7. **ADD FUEL**
8. **CONNECT BATTERY NEGATIVE TERMINAL**
9. **CHECK FOR FUEL LEAKS**
10. **CHECK FOR EXHAUST GAS LEAKS**
11. **INSTALL REAR FLOOR SERVICE HOLE COVER**
12. **INSTALL REAR SEAT CUSHION ASSEMBLY (See page SE-76)**
13. **PERFORM SYSTEM INITIALIZE**
    Some systems need initialization when disconnecting the battery terminal.

EC

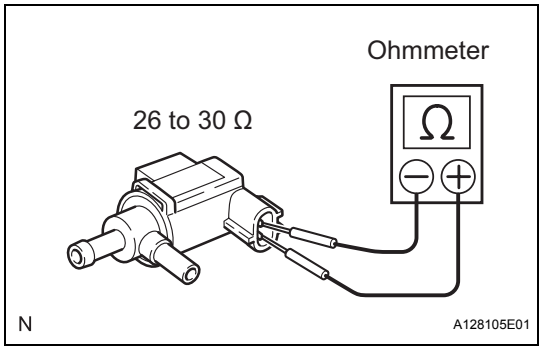

VACUUM SWITCHING VALVE (for EVAP)

INSPECTION

1. INSPECT EVAP VSV

(a) Check the VSV for open circuit.

(1) Measure the resistance.

Resistance

Tester Connection	Specified Condition
1 - 2	26 to 30 Ω at 20°C (68°F)
1 - Body ground 2 - Body ground	10 kΩ or higher

If the resistance is not as specified, replace the VSV assembly.

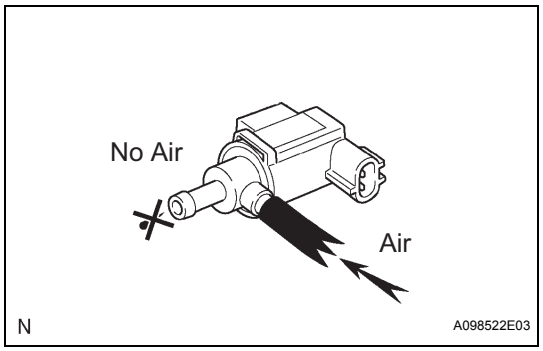

(b) Check VSV operation.

(1) Check that air does not flow from the port as shown in the illustration.

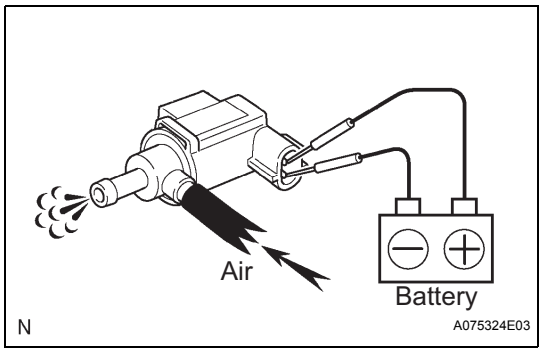

(2) Apply battery positive voltage across the terminals.

(3) Check that air flows from the ports.

If the result is not as specified, replace the VSV assembly.

EC

AIR FUEL RATIO SENSOR

COMPONENTS

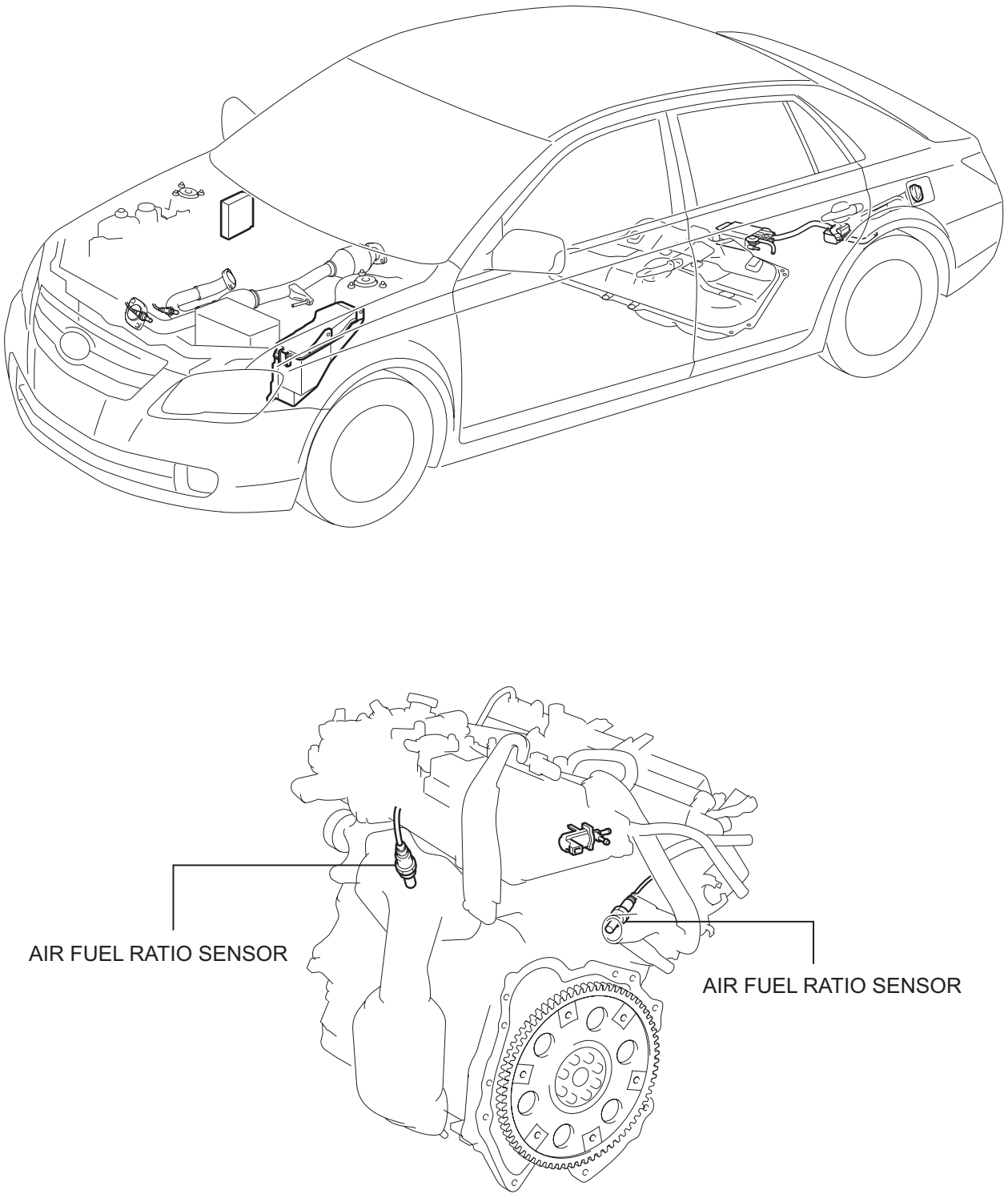

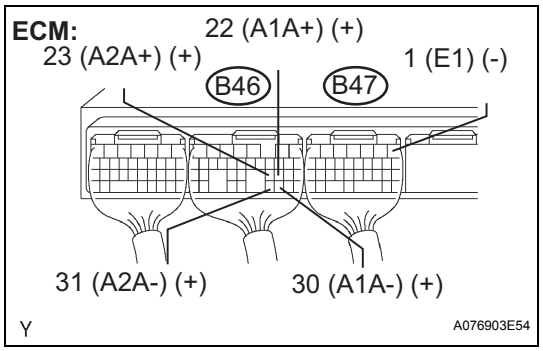

ON-VEHICLE INSPECTION

1. INSPECT AIR-FUEL RATIO SENSOR

(a) Measure the voltage of the ECM connectors. (See page ES-33)

Voltage

Tester Connection	Condition	Specified Condition
B46-22 (A1A+) - B47-1 (E1)	Ignition switch on (IG)	3.3 V
B46-30 (A1A-) - B47-1 (E1)	Ignition switch on (IG)	3.0 V
B46-23 (A2A+) - B47-1 (E1)	Ignition switch on (IG)	3.3 V
B46-31 (A2A-) - B47-1 (E1)	Ignition switch on (IG)	3.0 V

HINT:
Voltage of the engine ECM is kept constant regardless of the voltage of the A/F sensor.

NOTICE:
Connect test leads to the connector's backside. The connectors should not be disconnected from the ECM.

(b) Connect the intelligent tester to the DLC3.

(c) Select "DATA MONITOR". Then select "A/FS B1 S1", "A/FS B2 S1" and "O2S B1 S2" to display the monitors.

(d) Warm up the A/F sensor with the engine speed at 2,500 rpm for approximately 2 minutes.

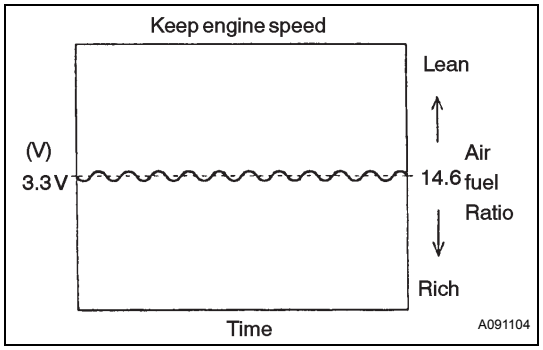

(e) Maintain engine speed at 2,500 rpm and confirm that the displays of "A/FS B1 S1" and "A/FS B2 S1" are as shown in the illustration.

HINT:
- The illustration may differ slightly from the display on the intelligent tester.
- Only the intelligent tester displays the waveform of A/F sensor.

(f) Confirm that the display of "O2S B1 S2" changes between 0 to 1 V with the engine speed at 2,500 rpm.

EC

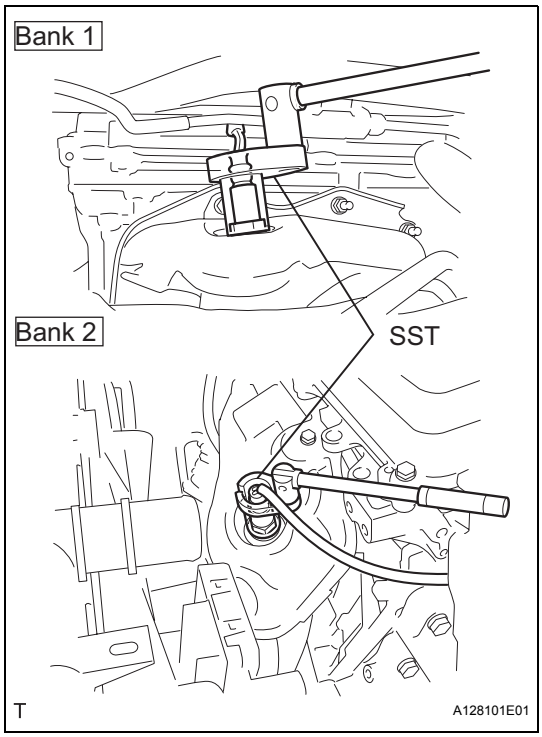

REMOVAL

1. REMOVE AIR FUEL RATIO SENSOR

(a) Disconnect the 2 air fuel ratio sensor connectors.

(b) Remove the 2 air fuel ratio sensors from the front pipe assembly.

SST 09224-00010

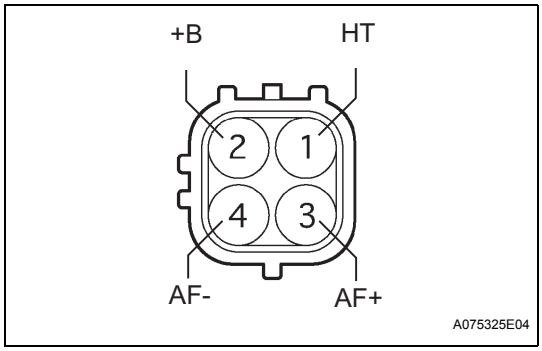

INSPECTION

1. INSPECT AIR FUEL RATIO SENSOR

(a) Measure the resistance between terminals 1 (HT) and 2 (+B).

Resistance

Condition	Specified Condition
20 °C (68°F)	1.8 to 3.4 Ω

If the result is not as specified, replace the sensor.

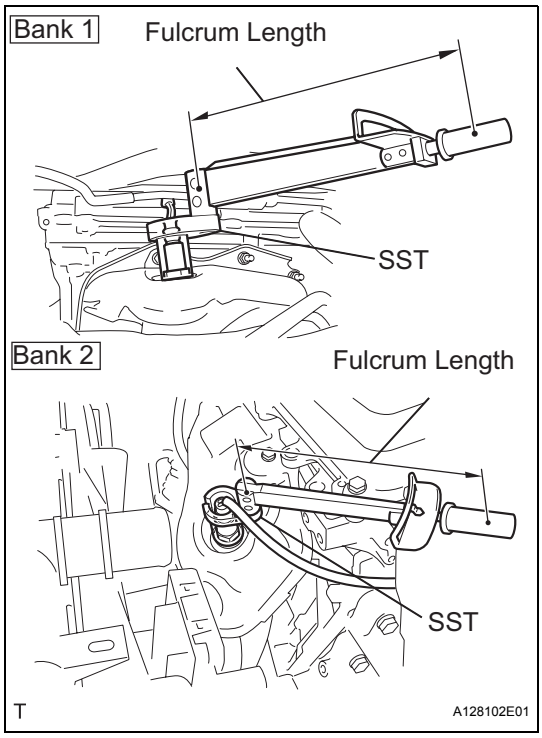

INSTALLATION

1. INSTALL AIR FUEL RATIO SENSOR

(a) Install the 2 air fuel ratio sensors to the front pipe assembly.

SST 09224-00010

Torque: 44 N*m (449 kgf*cm, 32 ft.*lbf)
40 N*m (408 kgf*cm, 30 ft.*lbf) (with SST)

NOTICE:
Use a torque wrench with a fulcrum length of 300 mm (11.81 in.).

(b) Connect the 2 air fuel ratio sensor connectors.

HEATED OXYGEN SENSOR

COMPONENTS

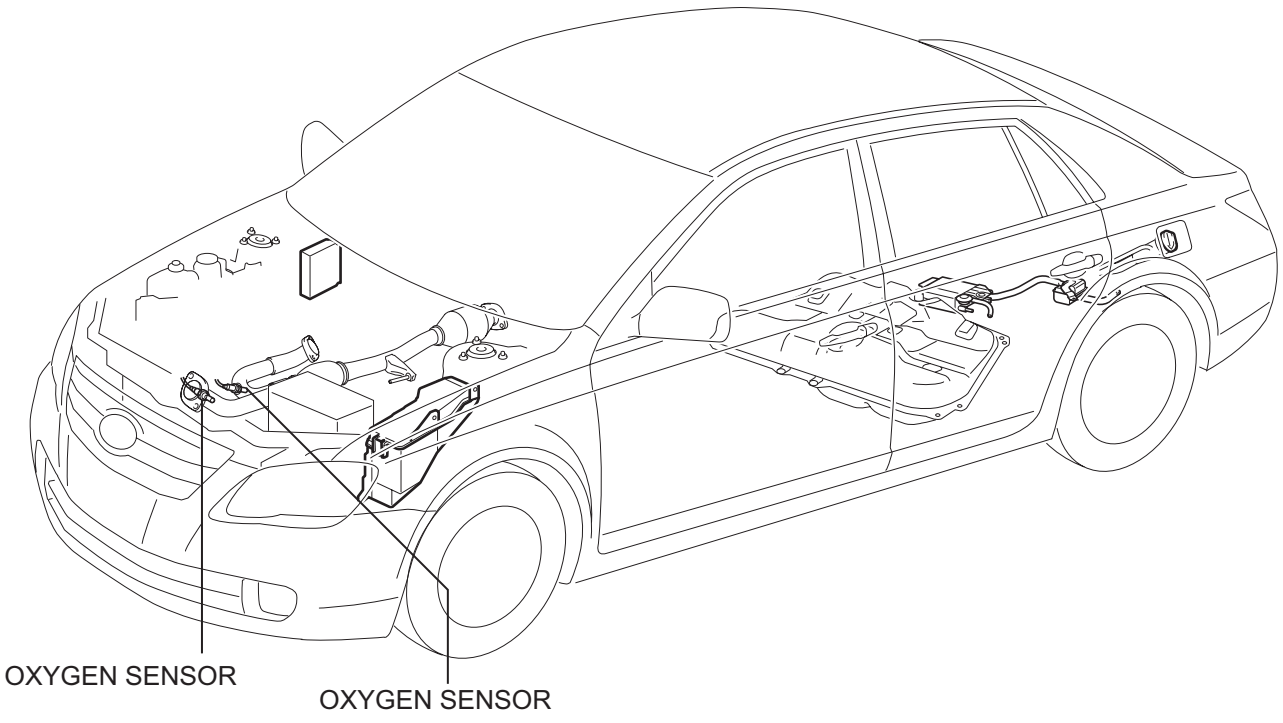

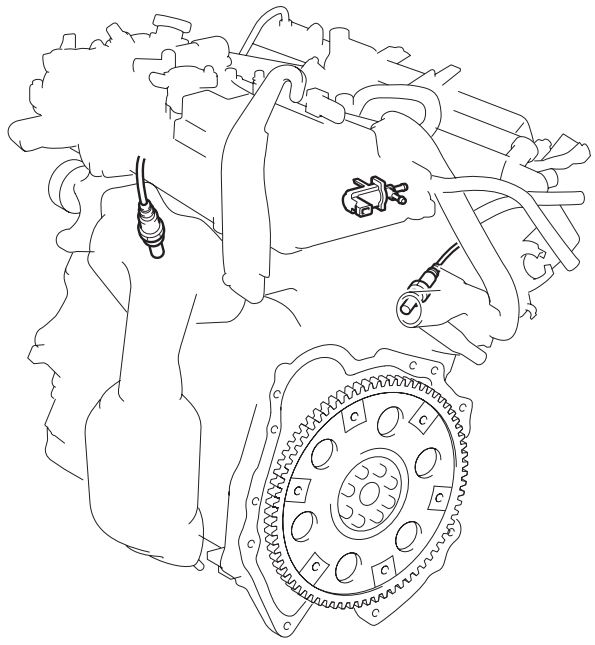

T

A114585E04

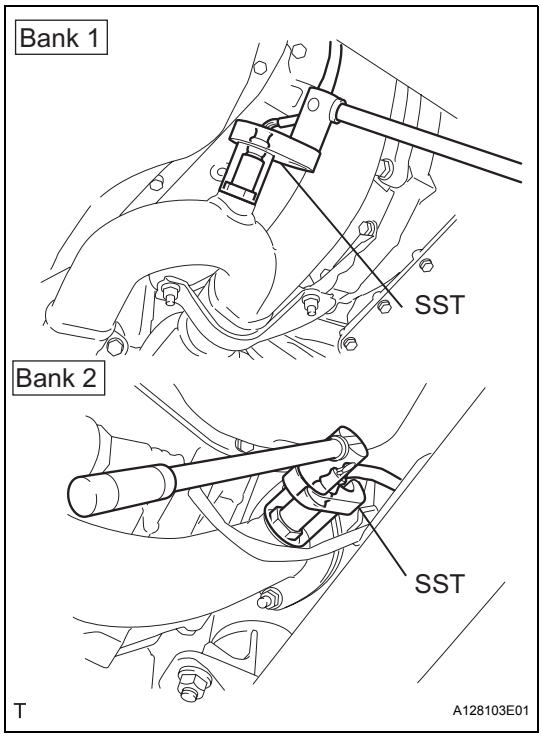

REMOVAL

1. REMOVE OXYGEN SENSOR

(a) Disconnect the 2 oxygen sensor connectors.

(b) Remove the 2 oxygen sensors from the front pipe assembly.

SST 09224-00010

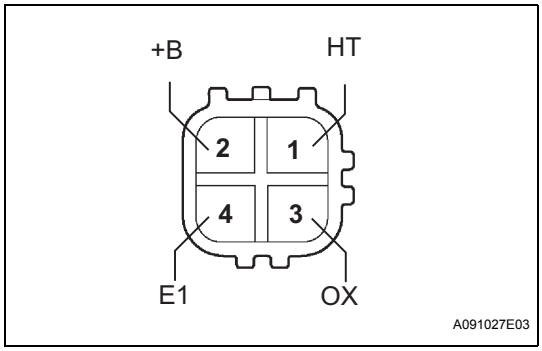

INSPECTION

1. INSPECT OXYGEN SENSOR

(a) Measure the resistance between terminals 1 (HT) and 2 (+B).

Resistance

Condition	Specified Condition
20°C (68°F)	11 to 16 Ω

If the result is not as specified, replace the sensor.

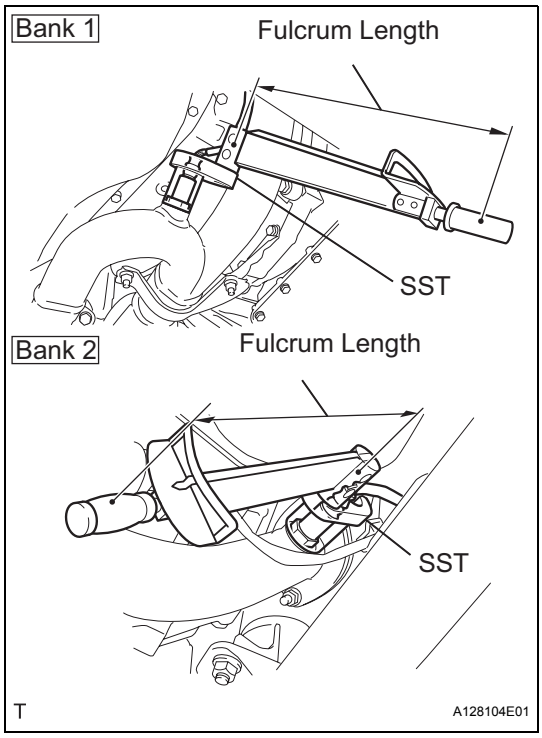

INSTALLATION

1. INSTALL OXYGEN SENSOR

(a) Install the 2 oxygen sensors to the front pipe assembly.

SST 09224-00010

Torque: 44 N*m (449 kgf*cm, 32 ft.*lbf)
40 N*m (408 kgf*cm, 30 ft.*lbf) (with SST)

NOTICE:

Use a torque wrench with a fulcrum length of 300 mm (11.81 in.).

(b) Connect the 2 oxygen sensor connectors.

SFI SYSTEM

PRECAUTION

1. INITIALIZATION

NOTICE:

- **When disconnecting the negative (-) battery cable, initialize the following system after the cable is reconnected.**

System Name	See procedure
Power Window Control	IN-29
Sliding Roof System	IN-29

- **Perform the RESET MEMORY (AT initialization) when replacing the automatic transaxle assembly, engine assembly or ECM (See page AX-15).**
- **Perform the REGISTRATION (VIN registration) when replacing the ECM (See page ES-19).**

HINT:

Initialization can not be completed by only removing the battery.

2. FOR USING INTELLIGENT TESTER

CAUTION:

Observe the following items for safety reasons:

- **Read its instruction books before using the tester.**
- **Prevent the tester cable from being caught on the pedals, shift lever and steering wheel when driving with the tester connected to the vehicle.**
- **When driving the vehicle for testing purposes using the tester, two persons are required. One is for driving the vehicle, and the other operates the tester.**

3. EXPRESSIONS OF IGNITION SWITCH

(a) The type of ignition switch used on this model differs according to the specifications of the vehicle. The expressions listed in the table below are used in this section.

Switch Type		Ignition Switch (position)	Engine Switch (condition)
Expression	Ignition Switch off	LOCK	Off
	Ignition Switch on (IG)	ON	On (IG)
	Ignition Switch on (ACC)	ACC	On (ACC)
	Engine Start	START	Start

4. FOR USING BATTERY DURING INSPECTION

(a) While using the battery during inspection, do not bring the positive and negative tester probes too close to each other as a short circuit may occur.

DEFINITION OF TERMS

Terms	Definitions
Monitor Description	Description of what ECM monitors and how to detect malfunctions (monitoring purpose and details).
Related DTCs	A group of diagnostic trouble codes that are output by ECM based on the same malfunction detection logic.
Typical Enabling Conditions	Preconditions that allow ECM to detect malfunction. With all preconditions satisfied, ECM sets DTC when monitored value(s) exceeds malfunction threshold(s).
Sequence of Operation	Order of monitor priority, applied if multiple sensors and components involved in single malfunction detection process. Each sensor and component monitored in turn and not monitored until previous detection operation is completed.
Required Sensors / Components	Sensors and components used by ECM to detect each malfunction.
Frequency of Operation	Number of times ECM checks for each malfunction during each driving cycle. "Once per driving cycle" means ECM only performs checks for that malfunction once during single driving cycle. "Continuous" means ECM performs checks for that malfunction whenever enabling conditions are met.
Duration	Minimum time for which ECM must detect continuous deviation in monitored value(s) in order to set DTC. Timing begins when typical enabling conditions are met.
Malfunction Thresholds	Values, beyond which, ECM determines malfunctions exist and sets DTCs.
MIL Operation	Timing of MIL illumination after defect is detected. "Immediate" means ECM illuminates MIL as soon as malfunction is detected. "2 driving cycles" means ECM illuminates MIL if the same malfunction is detected twice during the next sequential driving cycle.

PARTS LOCATION

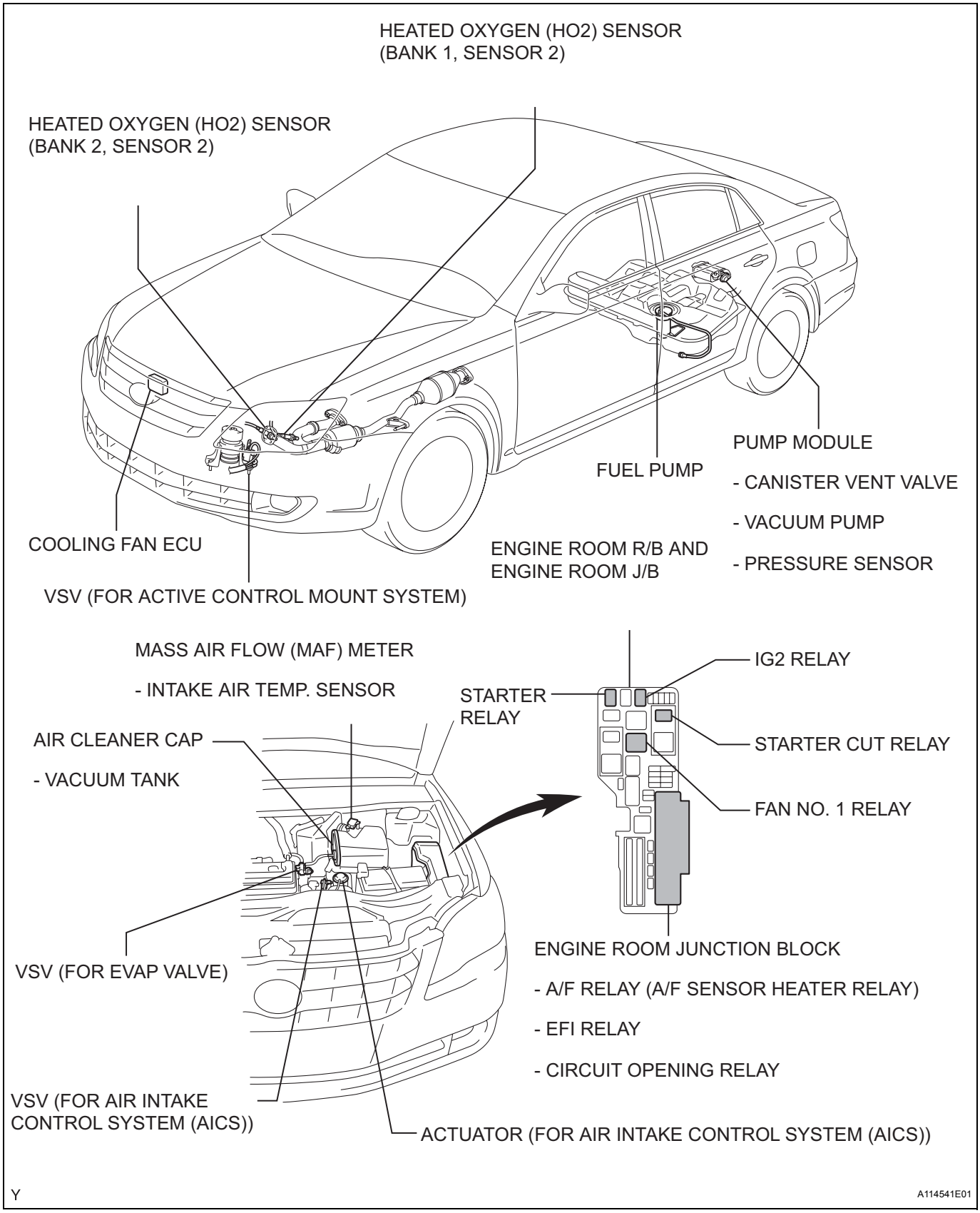

ES

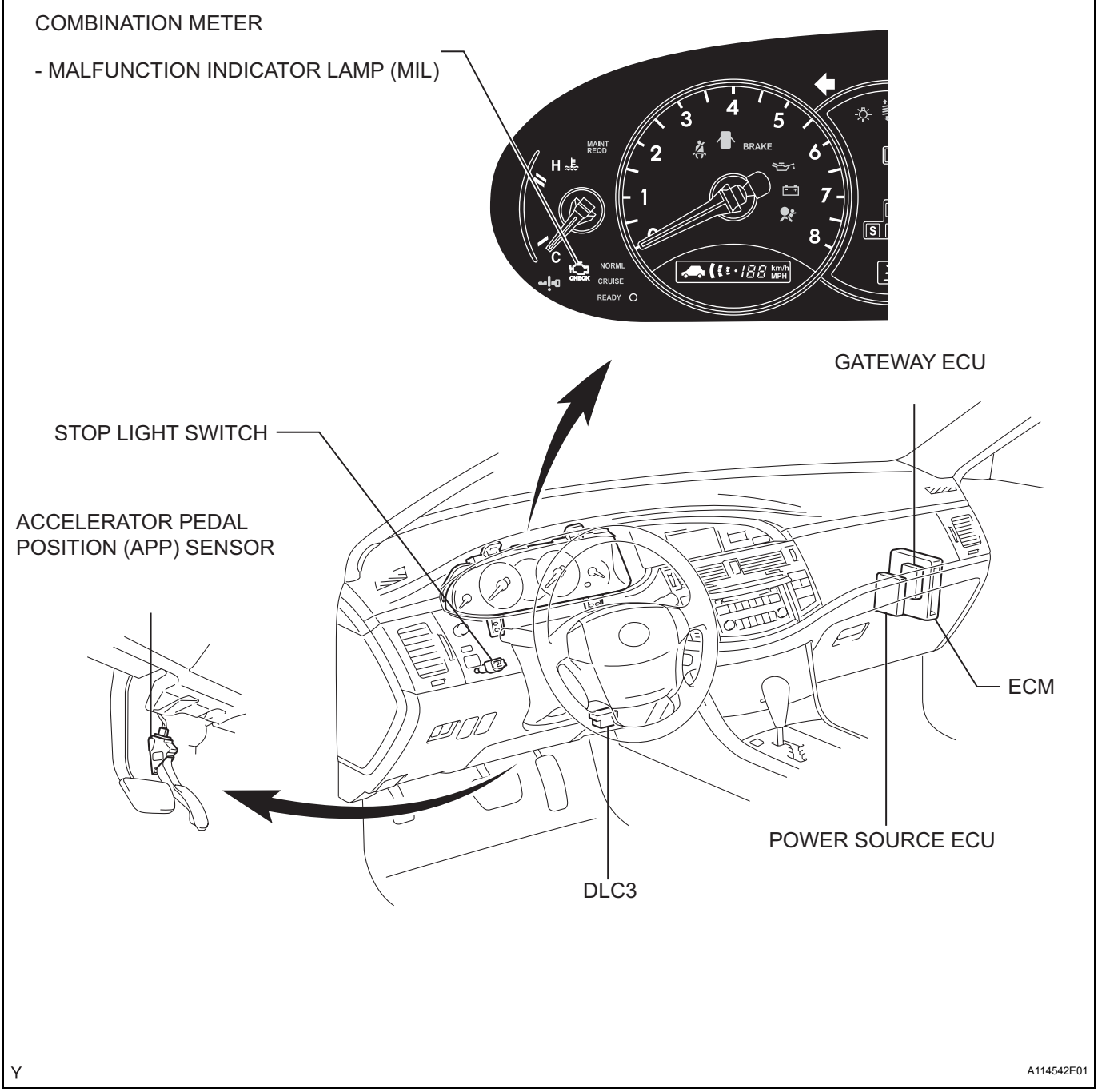

Y

A114542E01

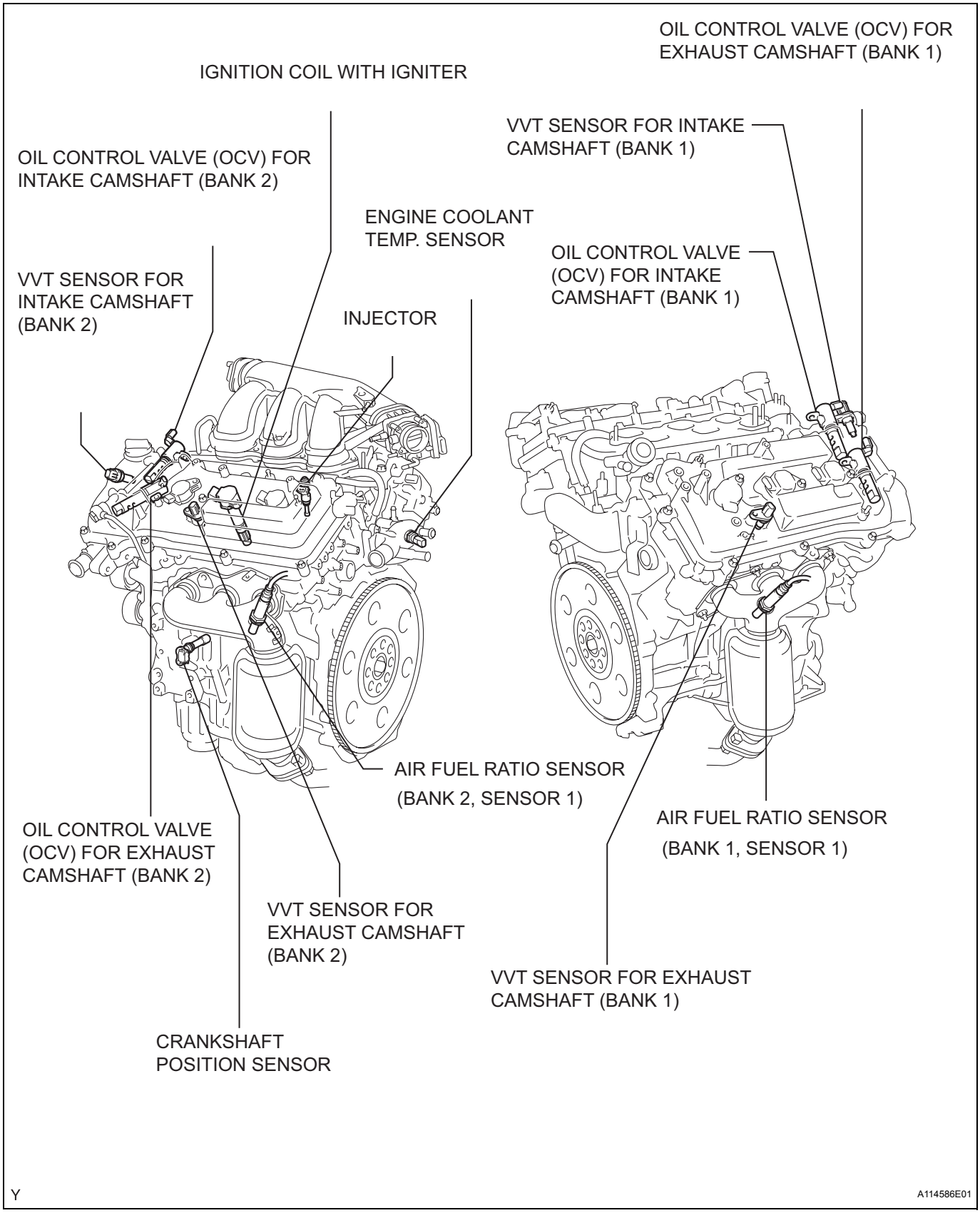
OIL CONTROL VALVE (OCV) FOR EXHAUST CAMSHAFT (BANK 1)
IGNITION COIL WITH IGNITER
VVT SENSOR FOR INTAKE CAMSHAFT (BANK 1)
OIL CONTROL VALVE (OCV) FOR INTAKE CAMSHAFT (BANK 2)
ENGINE COOLANT TEMP. SENSOR
OIL CONTROL VALVE (OCV) FOR INTAKE CAMSHAFT (BANK 1)
VVT SENSOR FOR INTAKE CAMSHAFT (BANK 2)
INJECTOR
AIR FUEL RATIO SENSOR (BANK 2, SENSOR 1)
AIR FUEL RATIO SENSOR (BANK 1, SENSOR 1)
OIL CONTROL VALVE (OCV) FOR EXHAUST CAMSHAFT (BANK 2)
VVT SENSOR FOR EXHAUST CAMSHAFT (BANK 2)
VVT SENSOR FOR EXHAUST CAMSHAFT (BANK 1)
CRANKSHAFT POSITION SENSOR
Y
A114586E01

ES

ES

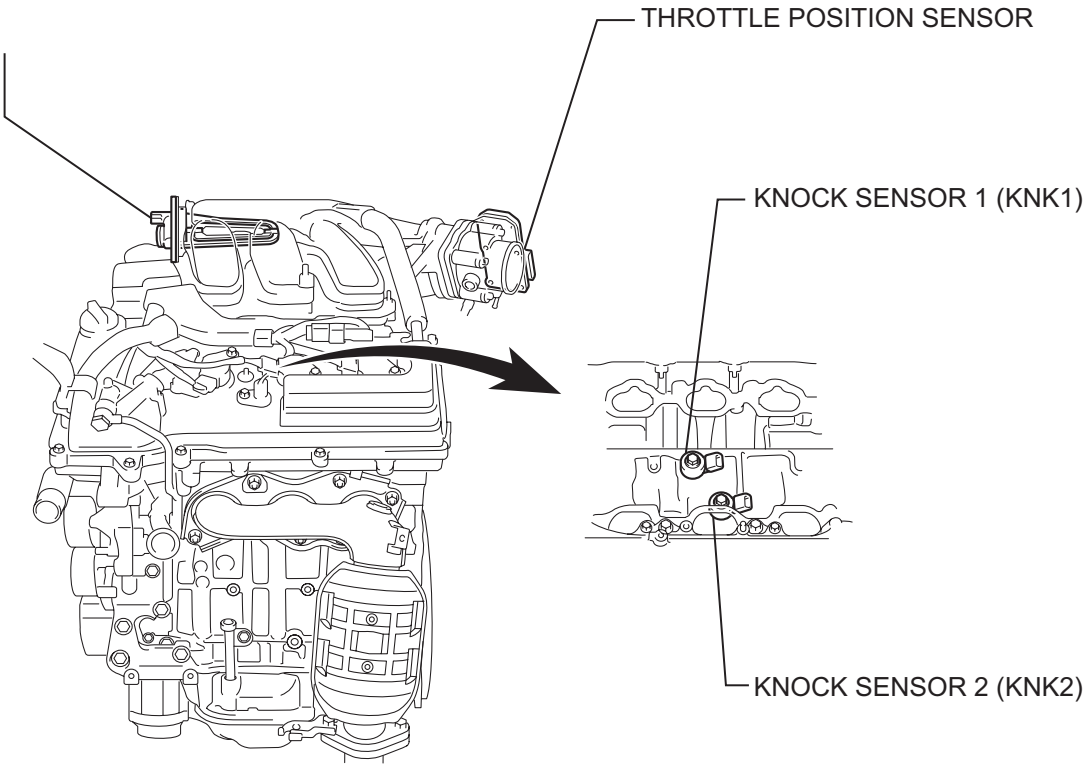
ACIS ACTUATOR (FOR ACOUSTIC CONTROL INDUCTION SYSTEM (ACIS))
THROTTLE POSITION SENSOR
KNOCK SENSOR 1 (KNK1)
KNOCK SENSOR 2 (KNK2)
Y
A114543E01

SYSTEM DIAGRAM

1. Without Smart Key System:

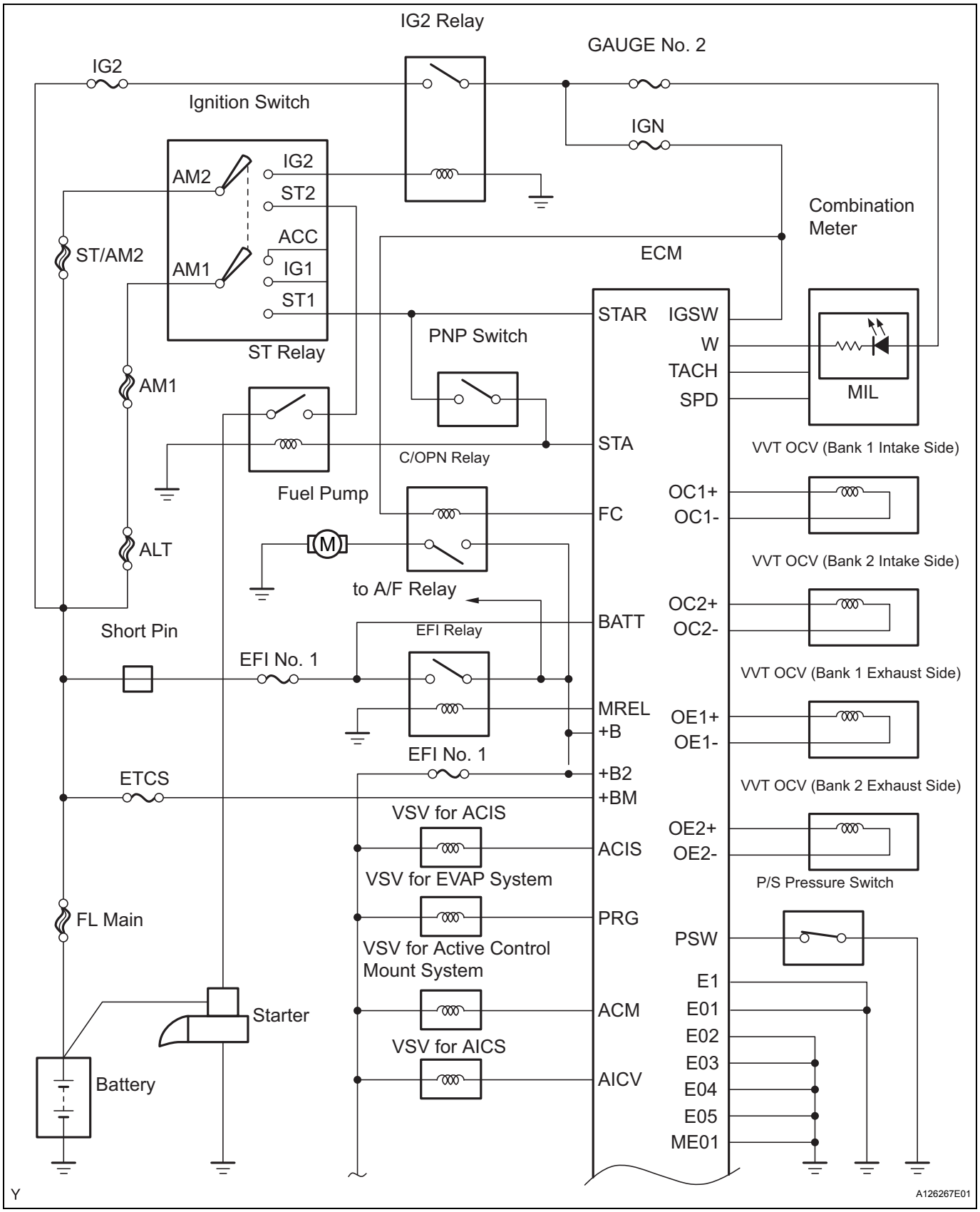

ES

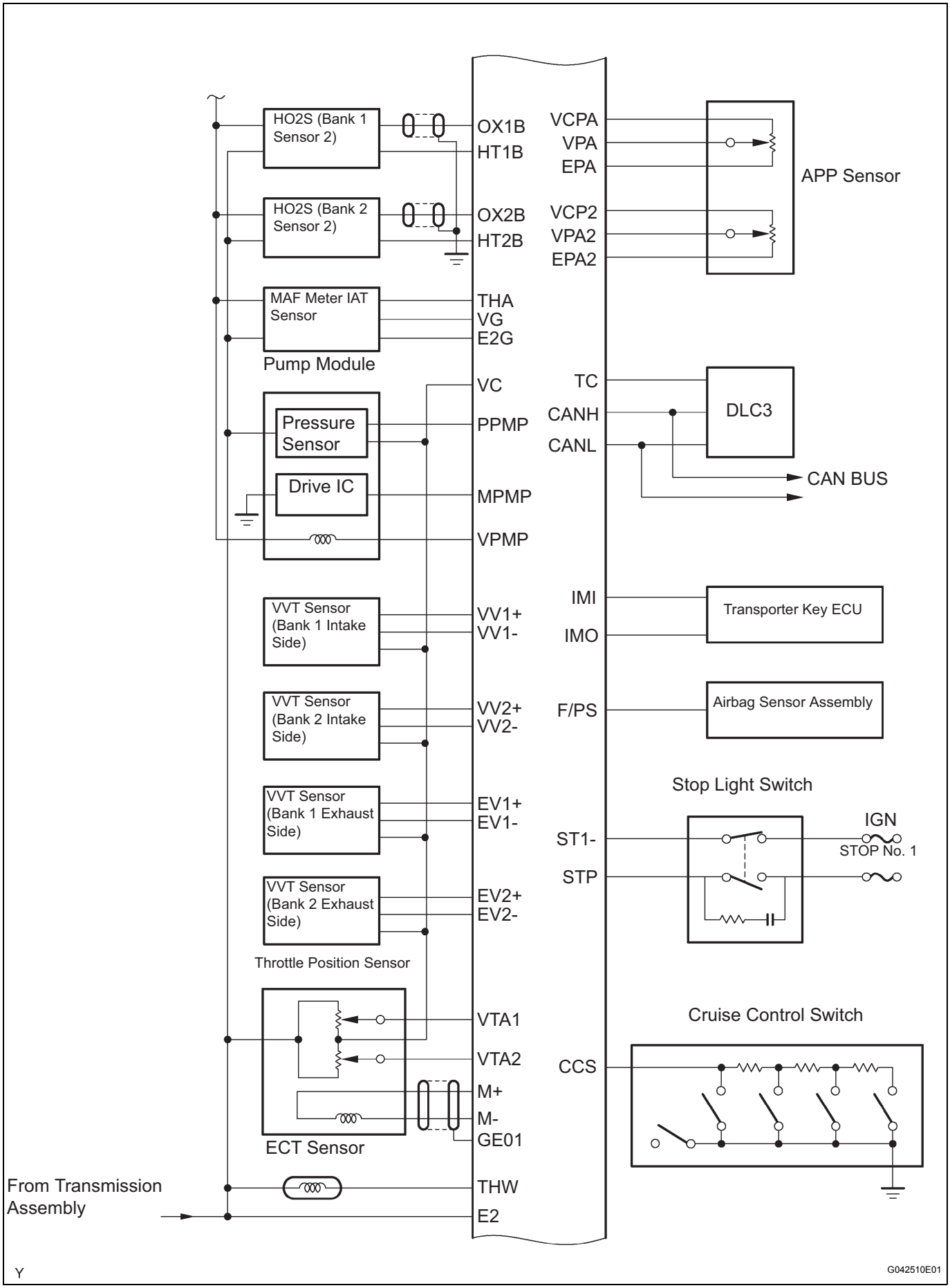
HO2S (Bank 1 Sensor 2)
OX1B
HT1B
HO2S (Bank 2 Sensor 2)
OX2B
HT2B
MAF Meter IAT Sensor
THA
VG
E2G
Pump Module
VC
Pressure Sensor
PPMP
Drive IC
MPMP
VPMP
VVT Sensor (Bank 1 Intake Side)
VV1+
VV1-
VVT Sensor (Bank 2 Intake Side)
VV2+
VV2-
VVT Sensor (Bank 1 Exhaust Side)
EV1+
EV1-
VVT Sensor (Bank 2 Exhaust Side)
EV2+
EV2-
Throttle Position Sensor
VTA1
VTA2
M+
M-
GE01
ECT Sensor
From Transmission Assembly
THW
E2
VCPA
VPA
EPA
VCP2
VPA2
EPA2
APP Sensor
TC
CANH
CANL
DLC3
CAN BUS
IMI
IMO
Transporter Key ECU
F/PS
Airbag Sensor Assembly
Stop Light Switch
ST1-
STP
IGN
STOP No. 1
Cruise Control Switch
CCS
Y
G042510E01

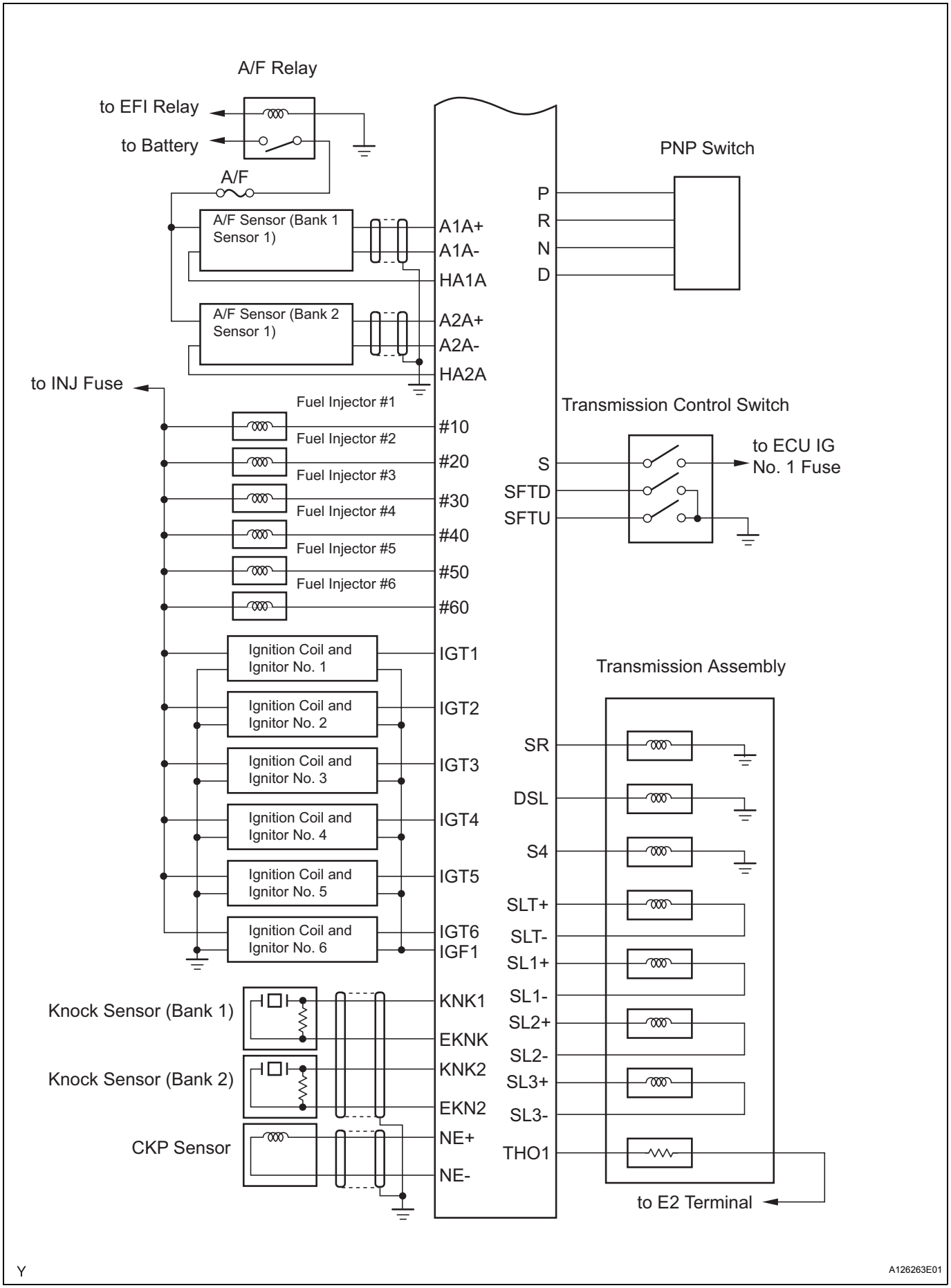
A/F Relay
to EFI Relay
to Battery
A/F
A/F Sensor (Bank 1 Sensor 1)
A/F Sensor (Bank 2 Sensor 1)
A1A+
A1A-
HA1A
A2A+
A2A-
HA2A
PNP Switch
P
R
N
D
to INJ Fuse
Fuel Injector #1
Fuel Injector #2
Fuel Injector #3
Fuel Injector #4
Fuel Injector #5
Fuel Injector #6
#10
#20
#30
#40
#50
#60
Transmission Control Switch
S
SFTD
SFTU
to ECU IG No. 1 Fuse
Ignition Coil and Ignitor No. 1
Ignition Coil and Ignitor No. 2
Ignition Coil and Ignitor No. 3
Ignition Coil and Ignitor No. 4
Ignition Coil and Ignitor No. 5
Ignition Coil and Ignitor No. 6
IGT1
IGT2
IGT3
IGT4
IGT5
IGT6
IGF1
Transmission Assembly
SR
DSL
S4
SLT+
SLT-
SL1+
SL1-
SL2+
SL2-
SL3+
SL3-
THO1
to E2 Terminal
Knock Sensor (Bank 1)
Knock Sensor (Bank 2)
CKP Sensor
KNK1
EKNK
KNK2
EKN2
NE+
NE-
Y
A126263E01

2. With Smart Key System:

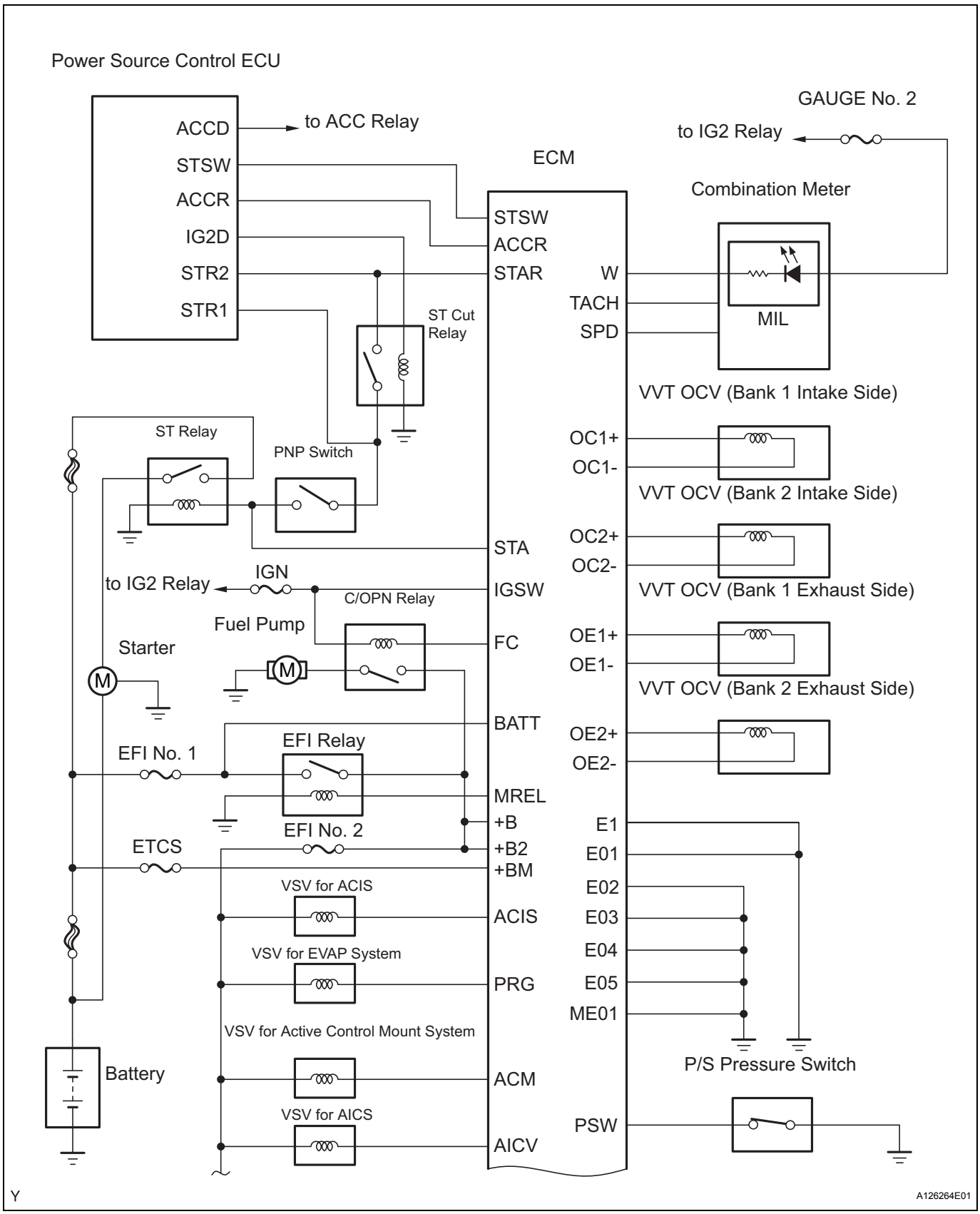

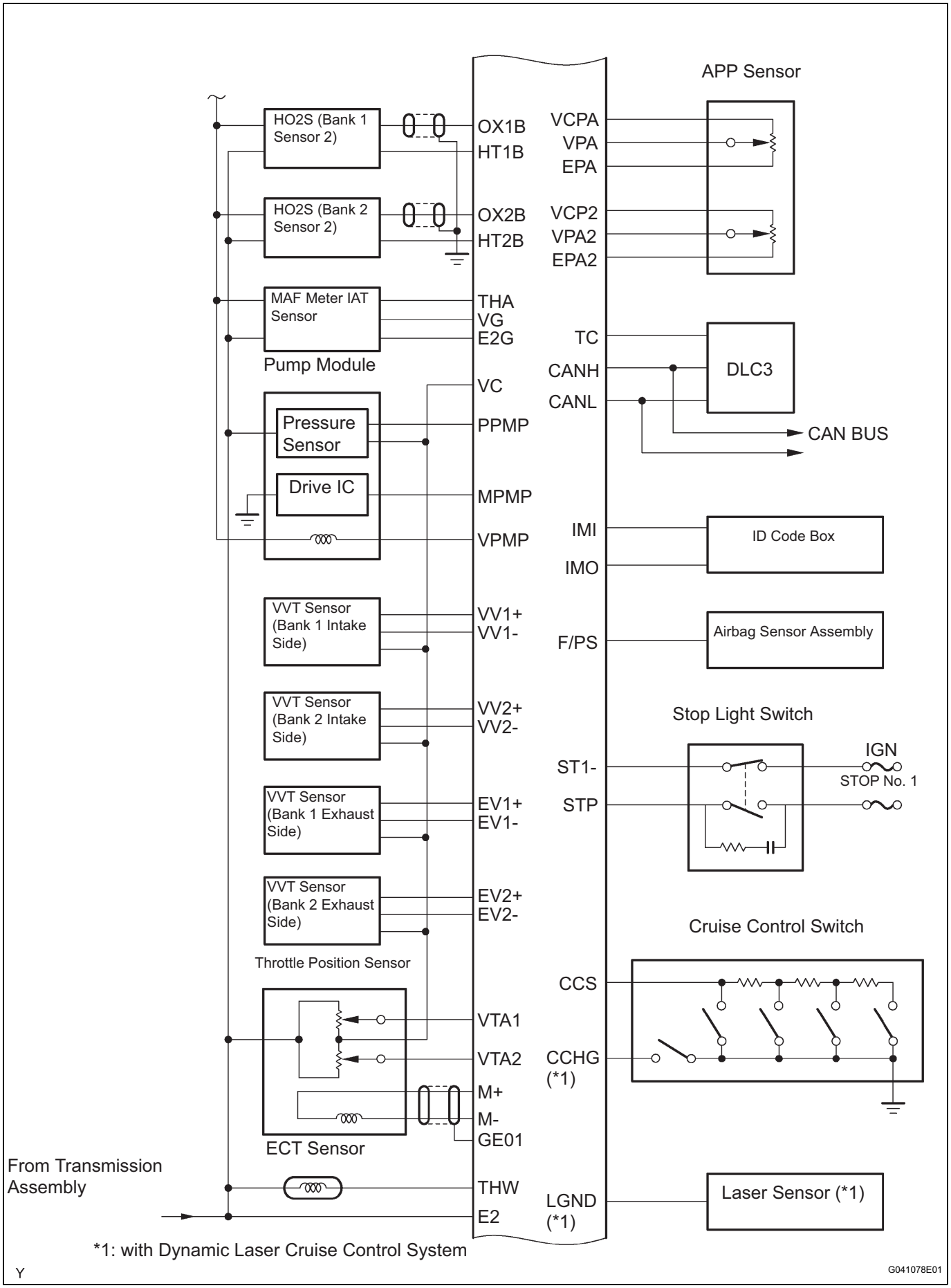
HO2S (Bank 1 Sensor 2)
HO2S (Bank 2 Sensor 2)
MAF Meter IAT Sensor
Pump Module
Pressure Sensor
Drive IC
VVT Sensor (Bank 1 Intake Side)
VVT Sensor (Bank 2 Intake Side)
VVT Sensor (Bank 1 Exhaust Side)
VVT Sensor (Bank 2 Exhaust Side)
Throttle Position Sensor
ECT Sensor
From Transmission Assembly
OX1B
HT1B
OX2B
HT2B
THA
VG
E2G
VC
PPMP
MPMP
VPMP
VV1+
VV1-
VV2+
VV2-
EV1+
EV1-
EV2+
EV2-
VTA1
VTA2
M+
M-
GE01
THW
E2
APP Sensor
VCPA
VPA
EPA
VCP2
VPA2
EPA2
TC
CANH
CANL
DLC3
CAN BUS
IMI
IMO
ID Code Box
F/PS
Airbag Sensor Assembly
Stop Light Switch
ST1-
STP
IGN
STOP No. 1
Cruise Control Switch
CCS
CCHG (*1)
LGND (*1)
Laser Sensor (*1)
*1: with Dynamic Laser Cruise Control System
Y
G041078E01

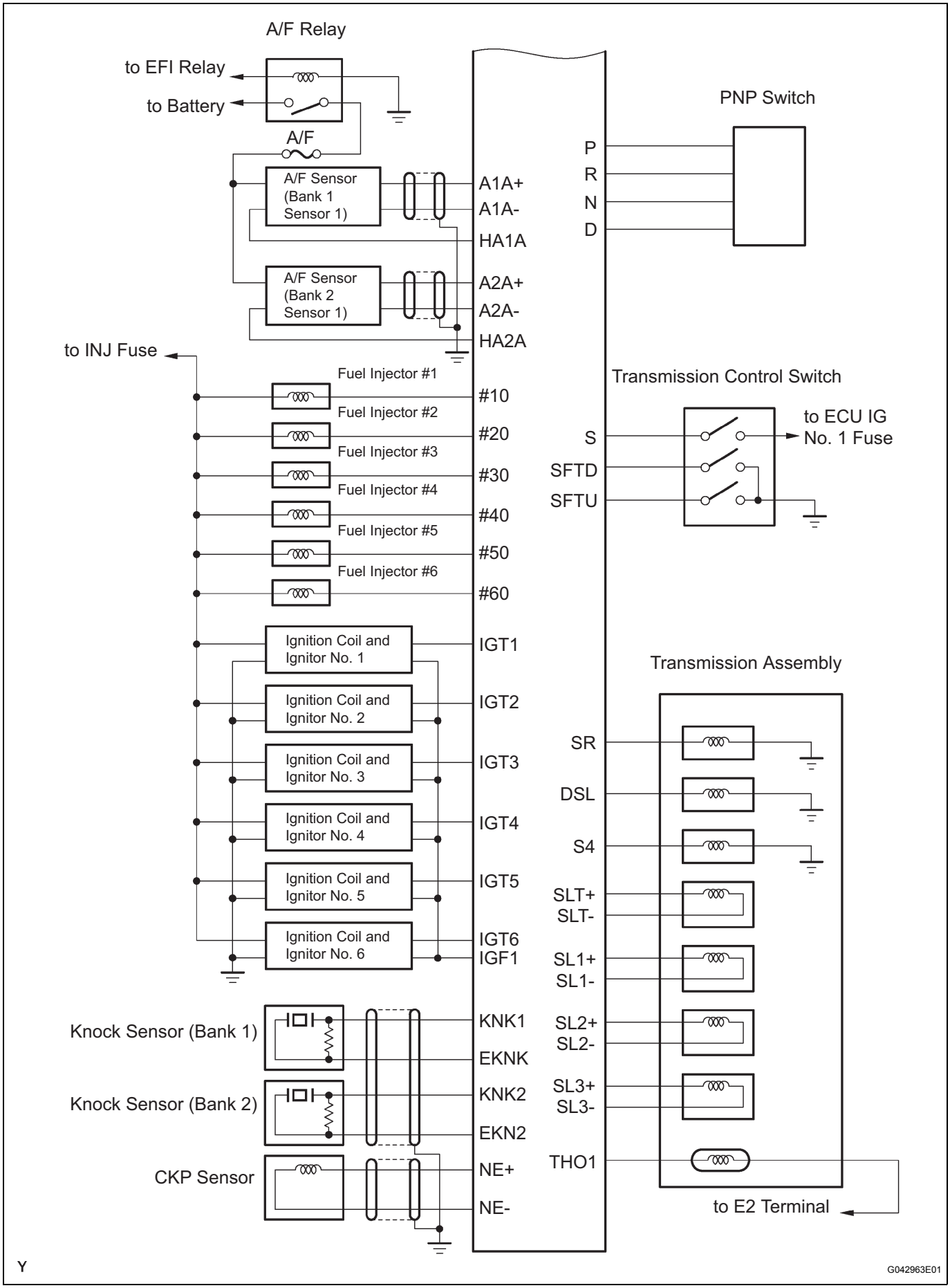

Y

G042963E01

3. COMMUNICATION WITH OTHER COMPUTERS

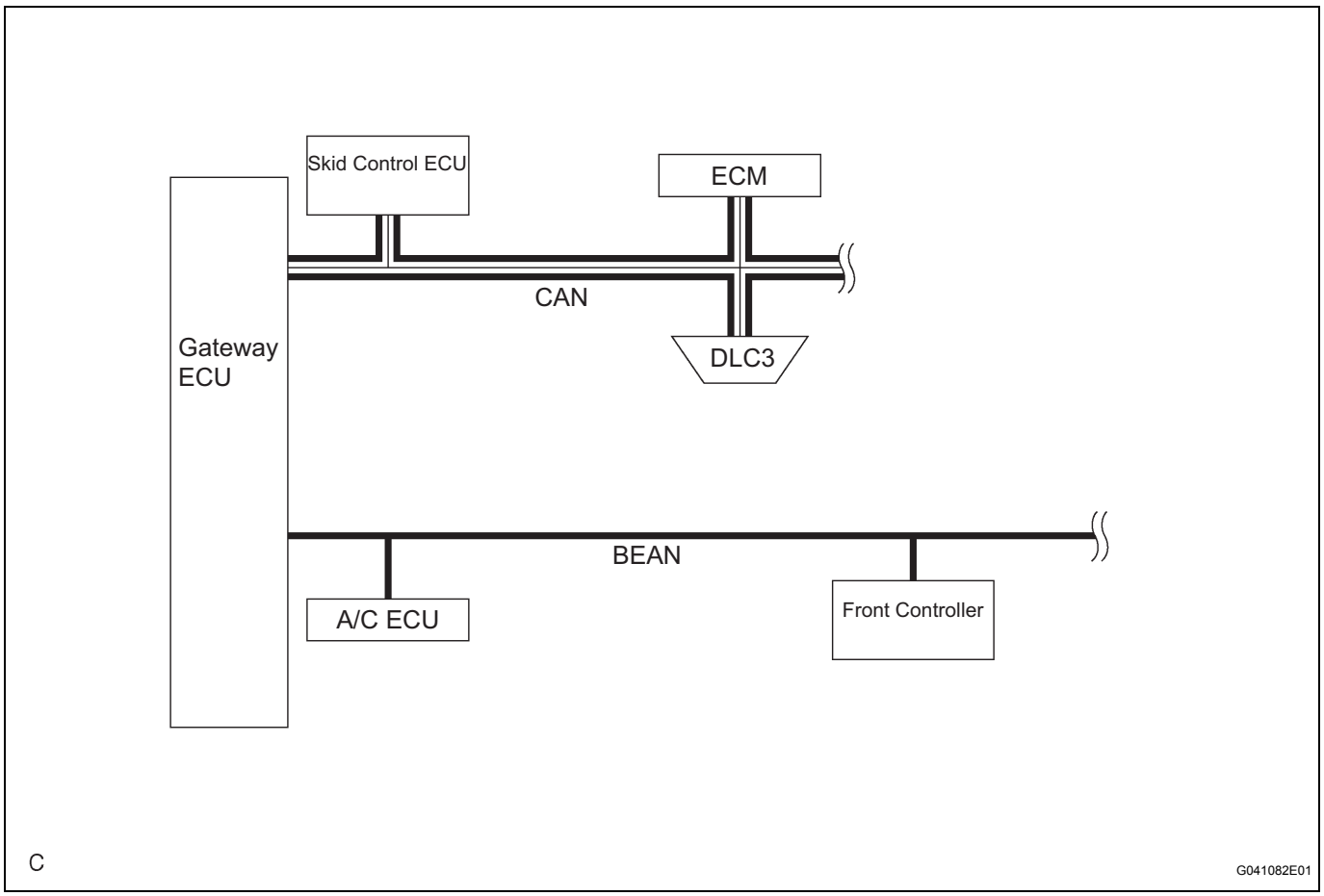

4. COMMUNICATIONS

(a) The ECM communicates with the following ECU using the signals listed below. The following table explains receiving and sending signals by the ECM or ECU.

Transmitter	Receiver	Signal	Communication Line
ECM	Front Controller	Radiator cooling fan control signal	CAN → BEAN
ECM	A/C ECU	A/C control signal (compressor control for turning off) A/C and engine co-operation control signal (compressor control for deceleration)	CAN → BEAN
A/C ECU	ECM	Idle up request signal	BEAN → CAN
Skid control ECU	ECM	Throttle closing request signal Ignition retard angle request signal Engine torque reduction request signal	CAN

HOW TO PROCEED WITH TROUBLESHOOTING

HINT:
The intelligent tester can be used in steps 2, 3, 4, 6 and 9.

1	VEHICLE BROUGHT TO WORKSHOP

NEXT

ES

2	CONNECT INTELLIGENT TESTER TO DLC3

HINT:
If the display indicates a communication fault in the tester, inspect the DLC3.

NEXT

3	CHECK DTC AND FREEZE FRAME DATA

(a) Check the DTC(s) and freeze frame data (See page ES-45).
HINT:
Record or print DTCs and freeze frame data, if necessary.

NEXT

4	CLEAR DTC AND FREEZE FRAME DATA

(a) Clear the DTC(s) and freeze frame data (See page ES-45).

NEXT

5	CONDUCT VISUAL INSPECTION

NEXT

6	SET CHECK MODE DIAGNOSIS

(a) Set the check mode (See page ES-48).

NEXT

7	CONFIRM PROBLEM SYMPTOMS

HINT:
If the engine does not start, perform steps 9 and 11 first.

Result

Result	Proceed to
Malfunction does not occur	A
Malfunction occurs	B

B → GO TO STEP 9

A

8 SIMULATE SYMPTOMS

NEXT

9 CHECK DTC

(a) Check the DTC (See page ES-44).

Result

Result	Proceed to
Trouble code	A
No code	B

B → GO TO STEP 11

A

10 REFER TO DTC CHART

HINT:
Refer to the DTC chart (See page ES-60).

NEXT

GO TO STEP 13

11 CONDUCT BASIC INSPECTION

HINT:
Refer to "BASIC INSPECTION" (See page ES-17).

Result

Result	Proceed to
Malfunctioning parts not confirmed	A
Malfunctioning parts confirmed	B

B → GO TO STEP 16

A

12	REFER TO PROBLEM SYMPTOMS TABLE

HINT:
Refer to "PROBLEM SYMPTOMS TABLE" (See page ES-30).

Result

Result	Proceed to
Malfunctioning circuit confirmed	A
Malfunctioning parts confirmed	B

B → GO TO STEP 16

A

13	CHECK ECM POWER SOURCE CIRCUIT

HINT:
Refer to "ECM POWER SOURCE CIRCUIT" (See page ES-395).

NEXT

14	CONDUCT CIRCUIT INSPECTION

Result

Result	Proceed to
Malfunction not confirmed	A
Malfunction confirmed	B

B → GO TO STEP 17

A

15	CHECK FOR INTERMITTENT PROBLEMS

HINT:
Refer to "CHECK FOR INTERMITTENT PROBLEMS" (See page ES-17).

NEXT

GO TO STEP 17

16	CONDUCT PARTS INSPECTION

NEXT

17	IDENTIFY PROBLEM

NEXT

18	ADJUST AND/OR REPAIR

NEXT

19	CONDUCT CONFIRMATION TEST

NEXT

END

CHECK FOR INTERMITTENT PROBLEMS

1. CHECK FOR INTERMITTENT PROBLEMS

HINT:

For use of the intelligent tester only:

Inspect the vehicle's ECM using check mode.

Intermittent problems are easier to detect with an intelligent tester when the ECM is in check mode. In check mode, the ECM uses 1 trip detection logic, which is more sensitive to malfunctions than normal mode (default), which uses 2 trip detection logic.

(a) Clear DTCs (See page ES-44).

(b) Switch the ECM from normal mode to check mode using an intelligent tester (See page ES-48).

(c) Perform a simulation test (See page IN-31).

(d) Check and wiggle the harness(es), connector(s) and terminal(s) (See page IN-36).

BASIC INSPECTION

When a malfunction is not confirmed by the DTC check, troubleshooting should be carried out in all circuits considered to be possible causes of the problem. In many cases, by carrying out the basic engine check shown in the following flowchart, the location of the problem can be found quickly and efficiently. Therefore, using this check is essential when engine troubleshooting.

1 CHECK BATTERY VOLTAGE

NOTICE:
Carry out this check with the engine stopped and ignition switch OFF.
Result

Result	Proceed to
11 V or more	OK
Below 11 V	NG

NG → **CHARGE OR REPLACE BATTERY**

OK ↓

2 CHECK WHETHER ENGINE CRANKS

NG → **PROCEED TO PROBLEM SYMPTOMS TABLE**

OK ↓

3 CHECK WHETHER ENGINE STARTS

NG → **GO TO STEP 6**

OK ↓

4 CHECK AIR FILTER

(a) Visually check that the air filter is not excessively contaminated with dirt or oil.

NG → **REPLACE AIR FILTER**

OK ↓

5 CHECK IDLING SPEED

(a) Check the idling speed (See page EM-2).

NG → TROUBLESHOOT IDLING SPEED AND PROCEED TO NEXT STEP

OK

6	CHECK FUEL PRESSURE

(a) Check the fuel pressure (See page FU-7).

NG → TROUBLESHOOT FUEL PRESSURE AND PROCEED TO NEXT STEP

OK

7	CHECK FOR SPARK

(a) Check for spark (See page IG-6).

NG → TROUBLESHOOT SPARK AND PROCEED TO NEXT STEP

OK

PROCEED TO PROBLEM SYMPTOMS TABLE

REGISTRATION

NOTICE:
The Vehicle Identification Number (VIN) must be input into the replacement ECM.
HINT:
The VIN is a 17-digit alphanumeric vehicle identification number. The intelligent tester is required to register the VIN.

1. INPUT INSTRUCTIONS

(a) Explains the general VIN input instructions using the intelligent tester.
(b) Intelligent tester
The arrow buttons (UP, DOWN, RIGHT and LEFT) and numerical buttons (0 to 9) are used to input the VIN.
(c) Cursor Operation
To move the cursor around the tester screen, press the RIGHT and LEFT buttons.
(d) Alphabetical Character Input
(1) Press the UP and DOWN buttons to select the desired alphabetical character.
(2) After selection, the cursor should move.
(e) Numeric Character Input
(1) Press the numerical button corresponding to the number that you want to input.
(2) After input, the cursor should move.
HINT:
Numerical characters can be selected by using the UP and DOWN buttons.
(f) Correction
(1) When correcting the input character(s), put the cursor onto the character using the RIGHT or LEFT buttons.
(2) Select or input the correct character using the UP/DOWN buttons, or the numerical buttons.
(g) Finishing Input Operation
(1) Make sure that the input VIN matches the vehicle VIN after input.
(2) Press the ENTER button on the tester.

2. READ VIN (Vehicle Identification Number)

(a) Explains the VIN reading process in a flowchart. Reading the VIN stored in the ECM is necessary when comparing it to the VIN provided with the vehicle.
(b) Read VIN using the intelligent tester.
(c) Check the vehicle's VIN.
(d) Connect the intelligent tester to the DLC3.
(e) Turn the ignition switch to ON.
(f) Turn the tester ON.

(g) Enter the following menus: DIAGNOSIS / ENHANCED OBD II / VIN.

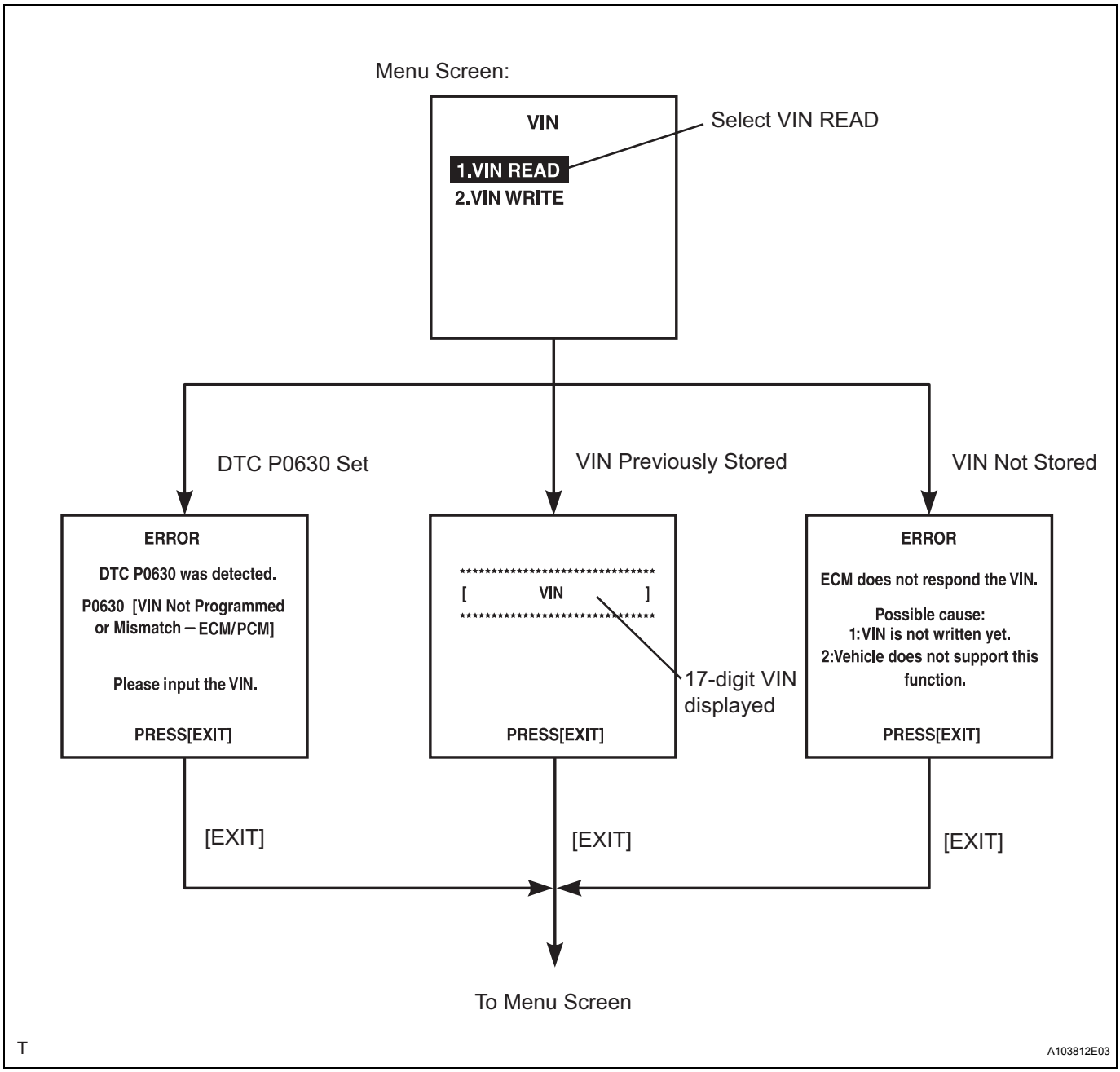

3. WRITE VIN

(a) Explains the VIN writing process in a flowchart. This process allows the VIN to be input into the ECM. If the ECM is changed, or the ECM VIN and Vehicle VIN do not match, the VIN can be registered, or overwritten in the ECM by following this procedure.
(b) Write VIN using the intelligent tester.
(c) Connect the intelligent tester to the DLC3.
(d) Turn the ignition switch to ON.
(e) Turn the tester ON.

(f) Enter the following menus: DIAGNOSIS / ENHANCED OBD II / VIN.

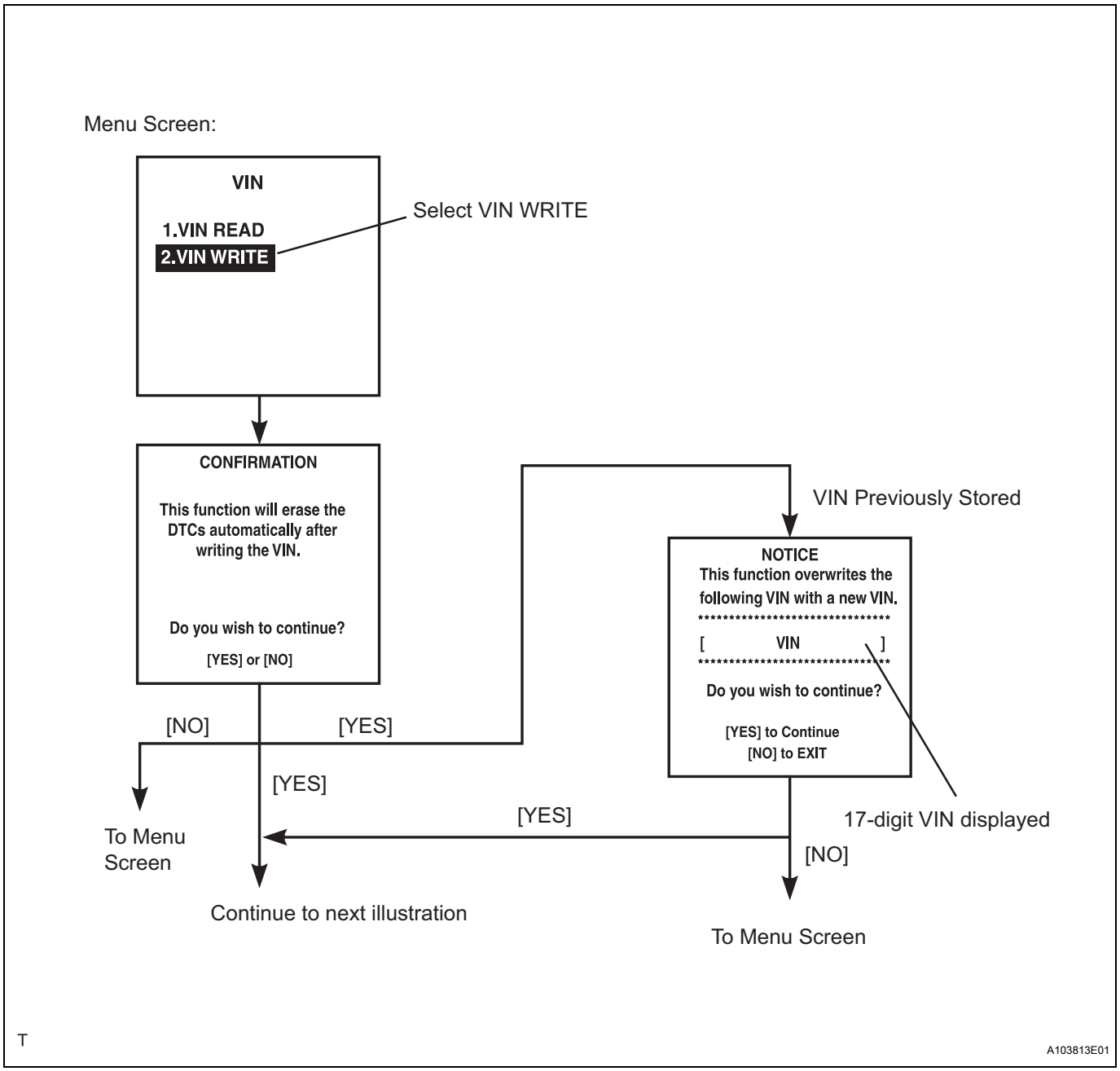

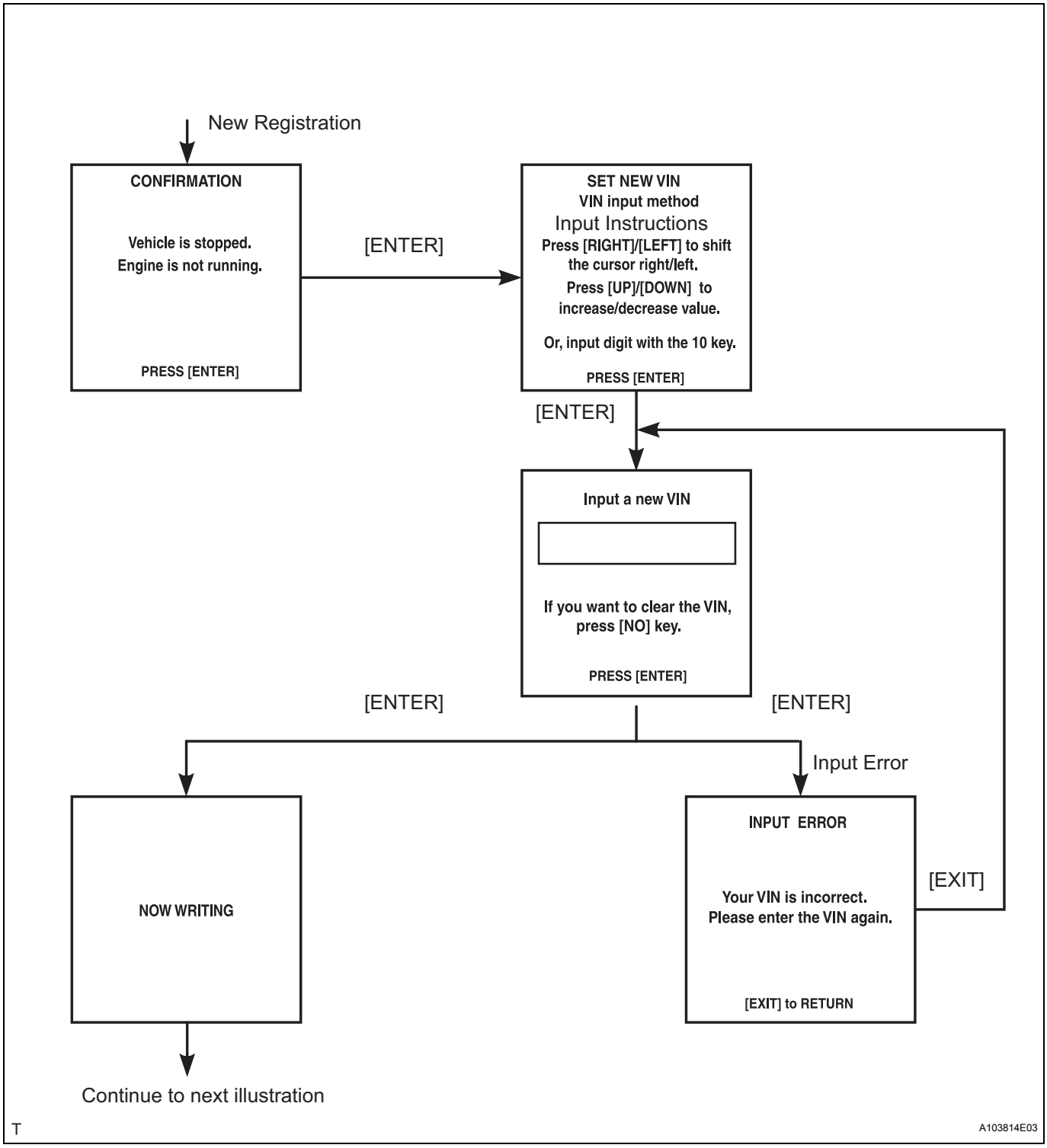
New Registration
CONFIRMATION
Vehicle is stopped.
Engine is not running.
PRESS [ENTER]
[ENTER]
SET NEW VIN
VIN input method
Input Instructions
Press [RIGHT]/[LEFT] to shift the cursor right/left.
Press [UP]/[DOWN] to increase/decrease value.
Or, input digit with the 10 key.
PRESS [ENTER]
[ENTER]
Input a new VIN
If you want to clear the VIN, press [NO] key.
PRESS [ENTER]
[ENTER]
[ENTER]
Input Error
NOW WRITING
INPUT ERROR
Your VIN is incorrect.
Please enter the VIN again.
[EXIT] to RETURN
[EXIT]
Continue to next illustration
T
A103814E03

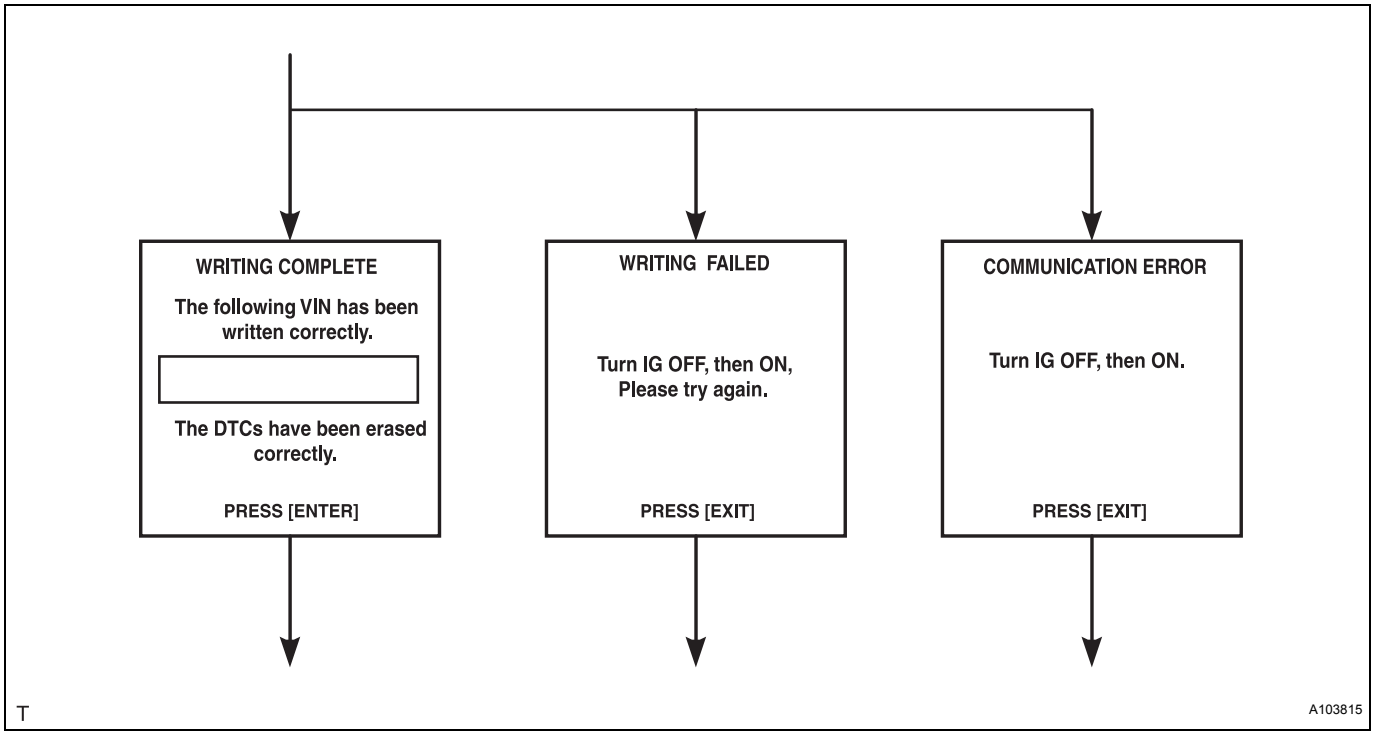
WRITING COMPLETE
The following VIN has been written correctly.
The DTCs have been erased correctly.
PRESS [ENTER]
WRITING FAILED
Turn IG OFF, then ON, Please try again.
PRESS [EXIT]
COMMUNICATION ERROR
Turn IG OFF, then ON.
PRESS [EXIT]
T
A103815

ES

O2S TEST RESULT

1. INTRODUCTION

(a) The O2S TEST RESULT refers to the results of the engine control module (ECM) when it monitors the oxygen sensor (O2S), and it can be read using the intelligent tester or the generic OBD II scan tool. Based on this, you can find the O2S's conditions. The ECM monitors the O2S in the various items. You can read the monitor result (TEST DATA) of each monitor item using the O2S TEST RESULT. However, the output value of the TEST DATA is the latest "snapshot" value that is taken after monitoring and therefore it is not dynamic.
In this repair manual, the description of the O2S TEST RESULT (for O2S related DTCs) are written in a table.
This table consists of 5 items:
1. TEST ID (a code applied to each TEST DATA)
2. Description of TEST DATA
3. Conversion Factor (When Conversion Factor has a value written in the table, multiply the TEST DATA value appearing on the scan tool by the Conversion Factor value. The result will be the required value.)
4. Unit
5. Standard Value

If the TEST DATA value appearing on the scan tool is out of the standard value, the O2S is malfunctioning. If it is within the standard value, the O2S is functioning normally. However, if the value is on the borderline of the standard value, the O2S may malfunction very soon.

2. HOW TO READ O2S TEST RESULT USING INTELLIGENT TESTER

(a) Connect the intelligent tester to the DLC3.

(b) On the tester screen, enter the following menus: DIAGNOSIS / CARB OBDII / O2S TEST RESULT. A list of the O2S equipped on the vehicle will be displayed.

O2S TEST RESULT Screen

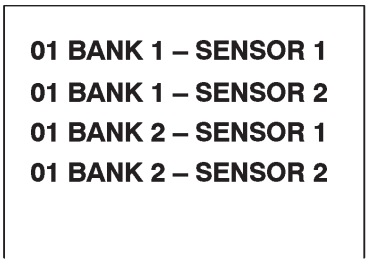

TEST DATA Screen

LOW SW V · · · 0.400 V
HIGH SW V · · · 0.550 V
MIN O2S V · · · 0.100 V
MAX O2S V · · · 0.900 V
TIME $81 · · · · 17

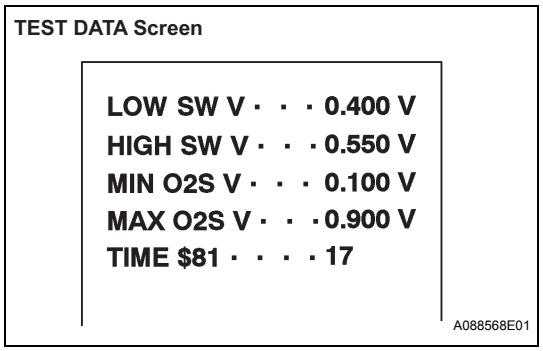

(c) Select the desired O2S and press ENTER. The TEST DATA screen will appear.
(d) Press HELP and * simultaneously. More information will appear.
(e) Example:
  (1) The intelligent tester displays "17" as a value of the "TIME $81" (see the illustration) (step (1)).
  (2) Find the Conversion Factor value of "TIME $81" in the O2S TEST RESULT chart below. 0.3906 is specified for $81 in this chart (step (2)).
  (3) Multiply "17" in step (1) by 0.3906 (Conversion Factor) in the step (2).
  17 x 0.3906 = 6.6 %
  (4) If the answer is within the standard value, the "TIME $81" can be confirmed to be normal.

ES

O2S TEST RESULT Chart

TEST ID	Description of TEST DATA	Conversion Factor	Unit	Standard Value
$81	Percentage of monitoring time when the O2S voltage is less than 0.05 V	Multiply 0.3906	%	Within 60%

CHECKING MONITOR STATUS

1. Outline

(a) The monitor results and test values can be checked with the OBD II scan tool or the intelligent tester. The engine control module (ECM) monitors the emissions-related components such as the thermostat, catalyst converter and evaporative emissions (EVAP), and determines whether they are functioning normally or not. When finished monitoring, the ECM stores the monitor results and the test values.
The monitor result indicates whether the component is functioning normally or not. The test value is the value that was used to determine the monitor result. If the test value is outside the test limit (malfunction criterion), the ECM determines the component is malfunctioning. Some emissions-related components have multiple test values to determine monitor result. If one of these test values is outside test limit, the ECM determines the component is malfunctioning.

2. Description

(a) The test value and test limit information are described as shown in the following table. This information is included under "MONITOR RESULT" in the emissions-related DTC sections:

Thermostat

MID	TID	Scaling	Description of Test Value	Minimum Test Limit	Maximum Test Limit
$E1	$E8	Multiply by 0.1 [°C]	ECT sensor output when estimated ECT reached to malfunction criteria	Malfunction criteria	Maximum test limit

- MID (Monitor Identification Data) is assigned to each emissions-related component.
- TID (Test Identification Data) is assigned to each test value.
- Scaling is used to calculate the test value indicated on generic OBD II scan tools.

3. Procedure (using intelligent tester)

(a) Connect the intelligent tester to the DLC3.
(b) Turn the ignition switch on (IG).
(c) Turn the tester or scan tool ON.
(d) Clear DTCs.
(e) Allow the vehicle to drive in accordance with the applicable drive pattern described in the READINESS MONITOR DRIVE PATTERN (See page ES-26).
(f) Check the monitor result. Select the intelligent tester menus: DIAGNOSIS, ENHANCED OBD II, MONITOR INFO and MONITOR STATUS. The monitor result appears after the component name.
- AVAIL indicates the component has not been monitored yet.

- COMPL indicates the component is functioning normally.
- INCMPL indicates the component is malfunctioning.

(g) Check the test value(s). Select the intelligent tester menus: DIAGNOSIS, ENHANCED OBD II, MONITOR INFO and TEST RESULT.

(h) Select the component and press ENTER. If the monitor result has been COMPL or INCMPL, the accuracy test value appears.

(i) Compare the test value with the test limits, MIN and MAX.

- If the test value is outside of the test limit, the component is malfunctioning.
- If the test value is on the borderline of the test limit, a malfunction is concealed in the component.

HINT:

The monitor result might on rare occasions be COMPL even if the Malfunction Indicator Lamp (MIL) is illuminated. This indicates the system malfunctioned on a previous driving cycle. This might be caused by an intermittent problem.

READINESS MONITOR DRIVE PATTERN

1. PURPOSE OF READINESS TESTS

- The On-Board Diagnostic (OBD II) system is designed to monitor the performance of emission related components, and indicate any detected abnormalities with DTCs (Diagnostic Trouble Codes). Since various components need to be monitored during different driving conditions, the OBD II system is designed to run separate monitoring programs called Readiness Monitors.
- The intelligent tester's software must be version 9.0 or newer to view the Readiness Monitor status. To view the status, select the following menu items: DIAGNOSIS / ENHANCED OBD II / MONITOR INFO / MONITOR STATUS.
- When the Readiness Monitor status reads COMPL (complete), the necessary conditions have been met for running the performance tests for that Readiness Monitor.
- A generic OBD II scan tool can also be used to view the Readiness Monitor status.

HINT:

Many Inspection and Maintenance (I/M) programs require a vehicle's Readiness Monitor status to show COMPL before beginning emission tests.

The Readiness Monitor will be reset to INCMPL (incomplete) if:

- The ECM has lost battery power or broken a fuse.
- DTCs have been cleared.
- The conditions for running the Readiness Monitor have not been met.

If the Readiness Monitor status shows INCMPL, follow the appropriate Readiness Monitor Drive Pattern to change the status to COMPL.

CAUTION:

Strictly observe posted speed limits, traffic laws, and road conditions when performing these drive patterns.

NOTICE:

These drive patterns represent the fastest method of satisfying all conditions necessary to achieve complete status for each specific Readiness Monitor.

In the event of a drive pattern being interrupted (possibly due to factors such as traffic conditions), the drive pattern can be resumed. In most cases, the Readiness Monitor will still achieve complete status upon completion of the drive pattern.

To ensure completion of the Readiness Monitors, avoid sudden changes in vehicle load and speed (driving up and down hills and / or sudden acceleration).

Contents:

Steps	Section Titles
1	Catalyst Monitor (Active Air-Fuel Ratio Control Type)
2	EVAP System Monitor (Key-Off Type)
3	Air-Fuel Ratio (A/F) and Heated Oxygen (HO2) Sensor Monitors (Active Air-Fuel Ratio Control Type)
4	Air-Fuel Ratio (A/F) and Heated Oxygen (HO2) Sensor Heater Monitors (Front A/F and Rear HO2 Sensor Type)

2. CATALYST MONITOR (ACTIVE AIR-FUEL RATIO CONTROL TYPE)

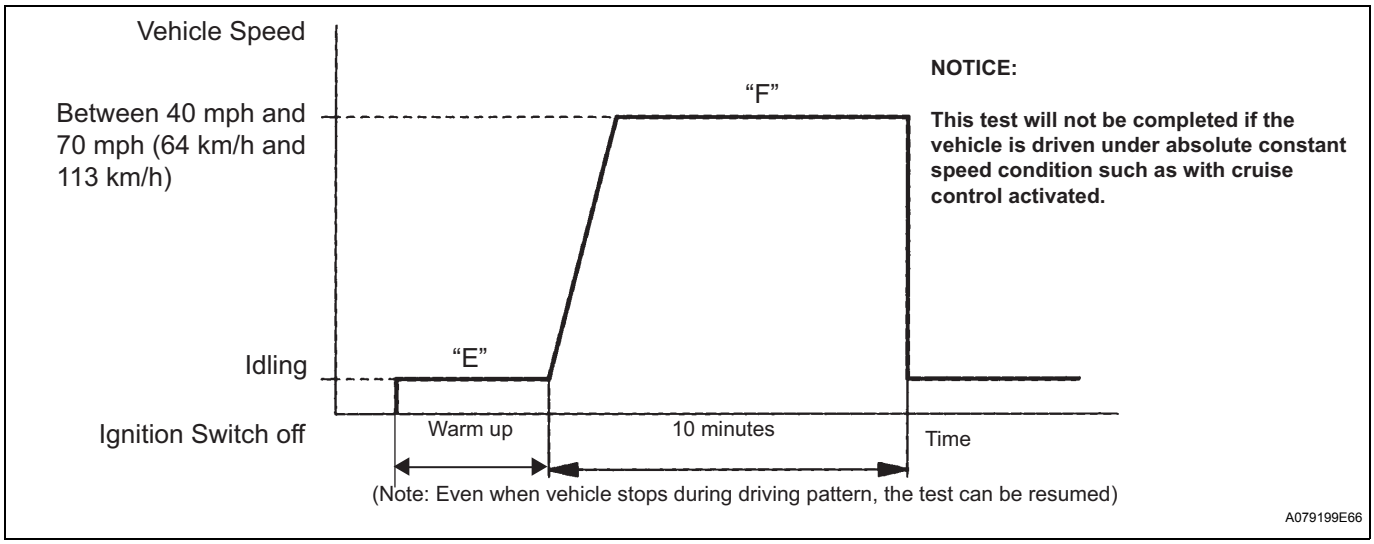

(a) Preconditions

The monitor will not run unless:

- The MIL is OFF

(b) Drive Pattern

(1) Connect an intelligent tester or OBDII scan tool to the DLC3 (Procedure "A").
(2) Turn the ignition switch on (IG) (Procedure "B").
(3) Turn the tester or scan tool ON (Procedure "C").
(4) Clear DTCs (where set) (See page ES-44) (Procedure "D").
(5) Start the engine and warm it up (Procedure "E").
(6) Drive the vehicle at between 40 mph and 70 mph (64 km/h and 113 km/h) for at least 10 minutes (Procedure "F").

(c) Monitor Status

(1) Check the Readiness Monitor status displayed on the tester or scan tool.
(2) If the status does not switch to COMPL (complete), extend the driving time.

3. EVAP SYSTEM MONITOR (KEY-OFF TYPE)

(a) Preconditions

The monitor will not run unless:

- The fuel tank is less than 90% full.
- The altitude is less than 8,000 ft (2,450 m).
- The vehicle is stationary.
- The engine coolant temperature is between 4.4°C and 35°C (40°F to 95°F).

- The intake air temperature is between 4.4°C and 35°C (40°F to 95°F).
- Vehicle was driven in the city area (or on free-way) for 10 minutes or more.

(b) Monitor Conditions

(1) Turn the ignition switch off and wait for 6 hours.
HINT:
Do not start the engine until checking Readiness Monitor status. If the engine is started, the step described above must be repeated.

(c) Monitor Status

(1) Connect an intelligent tester to the DLC3.
(2) Turn the ignition switch on (IG).
(3) Turn the tester or scan tool ON.
(4) Check the Readiness Monitor status displayed on the tester or scan tool.
If the status does not switch to COMPL (complete), restart the engine, make sure that the preconditions have been met, and then perform the Monitor Conditions again.

4. AIR-FUEL RATIO (A/F) AND HEATED OXYGEN (HO2) SENSOR MONITORS (ACTIVE AIR-FUEL RATIO CONTROL TYPE)

(a) Preconditions

The monitor will not run unless:

- 2 minutes or more have elapsed since the engine was started.
- The Engine Coolant Temperature (ECT) is 75°C (167°F) or more.
- Cumulative driving time at a vehicle speed of 30 mph (48 km/h) or more exceeds 6 minutes.
- Air-fuel ratio feedback control is performed.
- Fuel-cut control is performed for 8 seconds or more (for the Rear HO2 Sensor Monitor)

(b) Drive Pattern for front A/F sensor and HO2 sensor

(1) Connect an intelligent tester to the DLC3 (Procedure "A").
(2) Turn the ignition switch on (IG) (Procedure "B").
(3) Turn the tester ON (Procedure "C").
(4) Clear DTCs (See page ES-44) (Procedure "D").
(5) Start the engine, and warm it up until the ECT reaches 75°C (167°F) or higher (Procedure "E").
(6) Drive the vehicle at 38 mph (60 km/h) or more for at least 10 minutes (Procedure "F").
(7) Change the transmission to 2nd gear (Procedure "G").
(8) Accelerate the vehicle to 40 mph (64 km/h) or more by depressing the accelerator pedal for at least 10 seconds (Procedure "H").
(9) Soon after performing procedure "H" above, release the accelerator pedal for at least 4 seconds without depressing the brake pedal, in order to execute fuel-cut control (Procedure "I").

(10)Allow the vehicle to decelerate until the vehicle speed declines to less than 6 mph (10 km/h) (Procedure "J").

(11)Repeat procedures from "H" through "J" above at least 3 times in one driving cycle (Procedure "K").

(c) Monitor Status

(1) Check the Readiness Monitor status displayed on the tester.

(2) If the status does not switch to COMPL (complete), make sure that the preconditions have been met, and then perform procedures from "E" through "K" in Drive Pattern above.

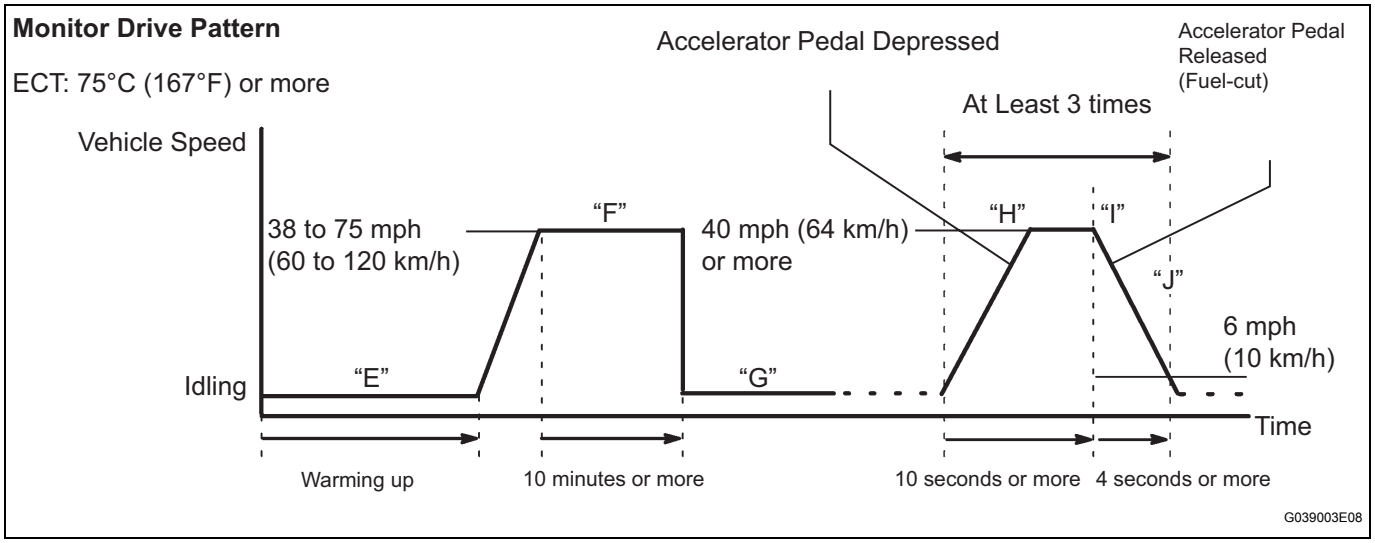

5. AIR-FUEL RATIO (A/F) AND HEATED OXYGEN (HO2) SENSOR HEATER MONITORS (FRONT A/F AND REAR HO2 SENSOR TYPE)

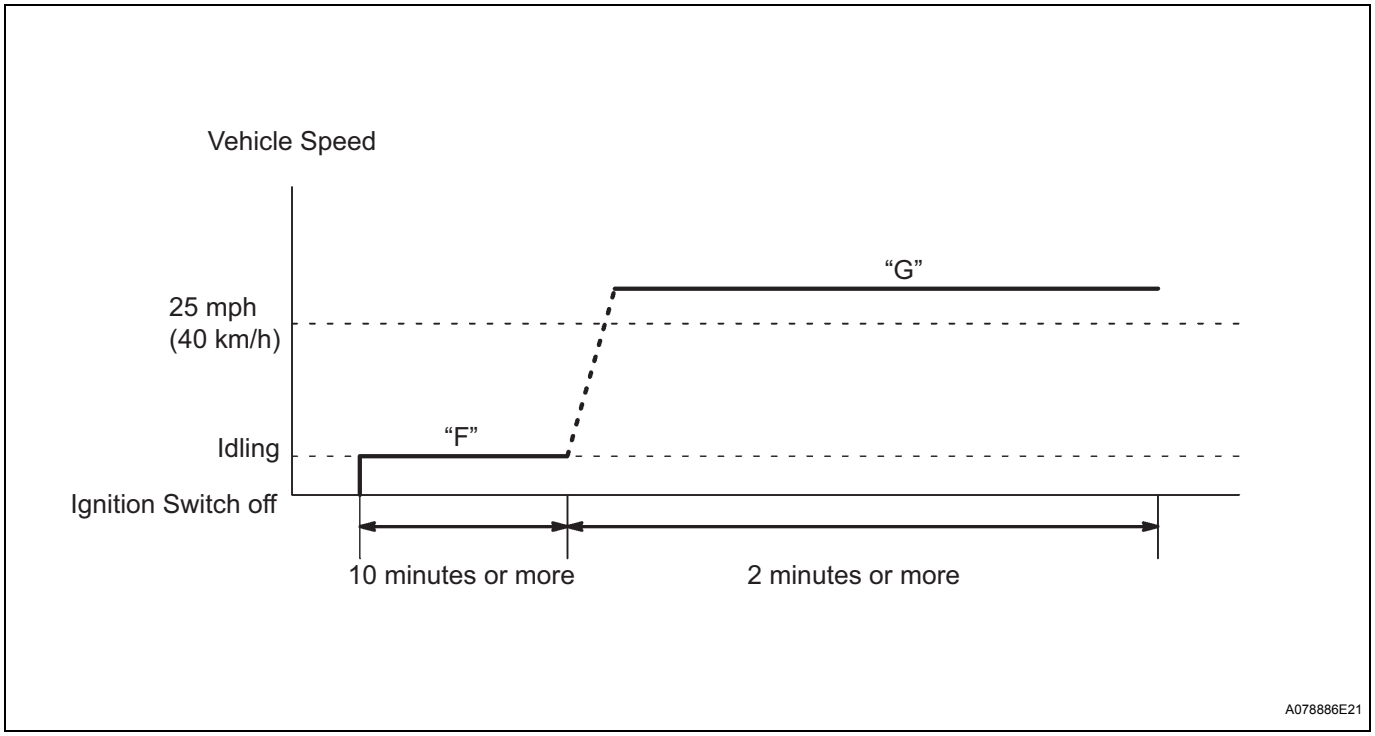

(a) Preconditions
The monitor will not run unless:
- The MIL is OFF

(b) Drive Pattern
(1) Connect an intelligent tester to the DLC3 (Procedure "A").
(2) Turn the ignition switch on (IG) (Procedure "B").
(3) Turn the tester or scan tool ON (Procedure "C").
(4) Clear DTCs (where set) (See page ES-44) (Procedure "D").
(5) Start the engine (Procedure "E").
(6) Allow the engine to idle for 10 minutes or more (Procedure "F").
(7) Drive the vehicle at 25 mph (40 km/h) or more for at least 2 minutes (Procedure "G").

(c) Monitor Status
(1) Check the Readiness Monitor status displayed on the tester or scan tool.
If the status does not switch to COMPL (complete), make sure that the preconditions have been met, and repeat procedures through "E" to "G" described in the Drive Pattern above.

PROBLEM SYMPTOMS TABLE

HINT:
When a malfunction is not confirmed by a DTC (Diagnostic Trouble Code) check and the cause of problem cannot be identified through a basic inspection, troubleshoot according to the priority order indicated in the table below.

SFI SYSTEM

Symptom	Suspected area	See page
Without Smart Key System: Engine does not crank (Does not start)	1. Immobilizer system	EI-4
	2. Starter signal circuit	ES-281
	3. Starter	ST-74
	4. STARTER relay	ST-80
With Smart Key System: Engine does not crank (Does not start)	1. Immobilizer system	EI-4
	2. Cranking holding function circuit	ES-406
	3. Starter signal circuit	ES-281
	4. Starter	ST-74
	5. STARTER relay	ST-80
	6. ECM power source circuit	ES-395
	7. ECM	ES-445
No initial combustion (Does not start)	1. ECM power source circuit	ES-395
	2. Ignition system	ES-215
	3. Fuel pump control circuit	ES-401
	4. Injector	ES-183
	5. Crank angle sensor	-
	6. ECM	ES-445
Engine cranks normally but difficult to start	1. Electronic Throttle Control System (ETCS)	ES-136
	2. Fuel pump control circuit	ES-401
	3. Ignition system	ES-215
	4. Spark plug	IG-6
	5. Compression	EM-2
	6. Injector	ES-183
	7. Crank angle sensor	-
Difficult to start with cold engine	1. Starter signal circuit	ES-281
	2. Electronic Throttle Control System (ETCS)	ES-136
	3. Fuel pump control circuit	ES-401
	4. Spark plug	IG-6
	5. Ignition system	ES-215
	6. Injector	ES-183
	7. Engine coolant temperature sensor	-
Difficult to start with warm engine	1. Starter signal circuit	ES-281
	2. Electronic Throttle Control System (ETCS)	ES-136
	3. Fuel pump control circuit	ES-401
	4. Spark plug	IG-6
	5. Ignition system	ES-215
	6. Injector	ES-183
	7. Engine coolant temperature sensor	-

Symptom	Suspected area	See page
High engine idling speed (Poor idling)	1. Electronic Throttle Control System (ETCS)	ES-136
	2. ECM power source circuit	ES-395
	3. A/C signal circuit (Compressor circuit)	AC-100
	4. Acoustic Control Induction System (ACIS)	ES-413
	5. PCV hose	-
	6. ECM	ES-445
Low engine idling speed (Poor idling)	1. Electronic Throttle Control System (ETCS)	ES-136
	2. ECM power source circuit	ES-395
	3. A/C signal circuit (Compressor circuit)	AC-100
	4. Acoustic Control Induction System (ACIS)	ES-413
	5. PCV hose	-
	6. Injector	ES-183
	7. ECM	ES-445
Rough idling (Poor idling)	1. Electronic Throttle Control System (ETCS)	ES-136
	2. Injector	ES-183
	3. Ignition system	ES-215
	4. Compression	EM-2
	5. Fuel pump control circuit	ES-401
	6. Spark plug	IG-6
	7. Acoustic Control Induction System (ACIS)	ES-413
	8. PCV hose	-
Hunting (Poor idling)	1. Electronic Throttle Control System (ETCS)	ES-136
	2. ECM power source circuit	ES-395
	3. Fuel pump control circuit	ES-401
	4. Spark plug	IG-6
	5. Ignition system	ES-215
	6. Injector	ES-183
	7. Acoustic Control Induction System (ACIS)	ES-413
	8. PCV hose	-
Hesitation/Poor acceleration (Poor driveability)	1. Injector	ES-183
	2. Fuel pump control circuit	ES-401
	3. Ignition system	ES-215
	4. Spark plug	IG-6
	5. Air Intake Control System (AICS)	ES-417
	6. A/T faulty	AX-6
Surging (Poor driveability)	1. Fuel pump control circuit	ES-401
	2. Spark plug	IG-6
	3. Ignition system	ES-215
	4. Injector	ES-183
Engine stalls soon after starting	1. Fuel pump control circuit	ES-401
	2. Electronic Throttle Control System (ETCS)	ES-136
	3. Crank angle sensor	-
	4. Spark plug	IG-6
	5. Ignition system	ES-215
	6. Injector	ES-183
Engine stalls during A/C operation	1. Air conditioning system (Compressor Air)	AC-26
	2. ECM	ES-445
Unable/difficult to refuel	Refueling valve (canister)	-
Engine vibrates frequently when idling (Active Control engine Mount (ACM) system does not operate)	Active control engine mount circuit	ES-359

TERMINALS OF ECM

1. SFI SYSTEM

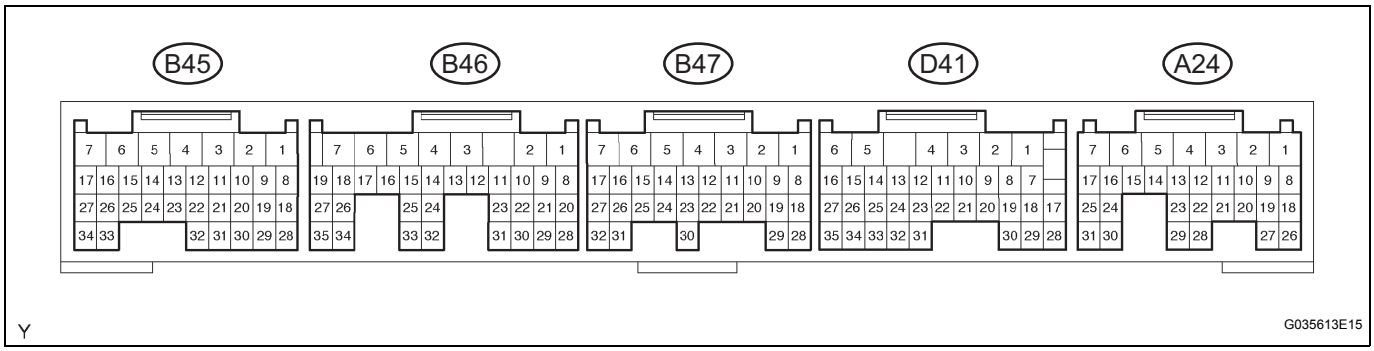

ES

HINT:
The standard normal voltage between each pair of the ECM terminals is shown in the table below. The appropriate conditions for checking each pair of the terminals are also indicated.
The check results should be compared with the standard normal voltage for that pair of terminals, listed in the STD Voltages column.
The illustration above can be used as a reference to identify the ECM terminal locations.

Symbols (Terminal No.)	Wiring Colors	Terminal Descriptions	Conditions	STD Voltages
+B (A24-1) - E1 (B47-1)	L - BR	Power source of ECM	Ignition switch on (IG)	9 to 14 V
+B2 (A24-2) - E1 (B47-1)	R - BR	Power source of ECM	Ignition switch on (IG)	9 to 14 V
BATT (A24-3) - E1 (B47-1)	B - BR	Battery (for measuring the battery voltage and for the ECM memory)	Always	9 to 14 V
VPMP (A24-5) - E1 (B47-1)	W - BR	Vent valve operation signal (built into pump module)	Ignition switch on (IG)	9 to 14 V
MPMP (A24-6) - E1 (B47-1)	G - BR	Vacuum pump operation signal (built into pump module)	Vacuum pump OFF	0 to 3 V
MPMP (A24-6) - E1 (B47-1)	G - BR	Vacuum pump operation signal (built into pump module)	Vacuum pump ON	9 to 14 V
+BM (A24-7) - E1 (B47-1)	V - BR	Power source of ETCS throttle motor	Always	9 to 14 V
MREL (A24-8) - E1 (B47-1)	V - BR	EFI relay operation signal	Ignition switch on (IG)	9 to 14 V
IGSW (A24-9) - E1 (B47-1)	Y - BR	Ignition switch signal	Ignition switch on (IG)	9 to 14 V
FC (A24-10) - E1 (B47-1)	O - BR	C/OPEN relay operation signal (fuel pump control)	Ignition switch on (IG)	9 to 14 V
STP (A24-15) - E1 (B47-1)	W - BR	Stop light switch signal	Brake pedal depressed	7.5 to 14 V
STP (A24-15) - E1 (B47-1)	W - BR	Stop light switch signal	Brake pedal released	Below 1.5 V
ST1- (A24-16) - E1 (B47-1)	GR - BR	Stop light switch signal (opposite to STP terminal)	Ignition switch on (IG), Brake pedal depressed	Below 1.5 V
ST1- (A24-16) - E1 (B47-1)	GR - BR	Stop light switch signal (opposite to STP terminal)	Ignition switch on (IG), Brake pedal released	7.5 to 14 V
ACCR*2 (A24-17) - E1 (B47-1)	B - BR	ACC relay control signal	Cranking	Below 1.5 V
VPA (A24-18) - EPA (A24-20)	W - LG	Accelerator pedal position sensor signal (for engine control)	Ignition switch on (IG), Accelerator pedal fully released	0.5 to 1.1 V

Symbols (Terminal No.)	Wiring Colors	Terminal Descriptions	Conditions	STD Voltages
VPA (A24-18) - EPA (A24-20)	W - LG	Accelerator pedal position sensor signal (for engine control)	Ignition switch on (IG), Accelerator pedal fully depressed	2.6 to 4.5 V
VPA2 (A24-19) - EPA2 (A24-21)	R - L-B	Accelerator pedal position sensor signal (for sensor malfunction detection)	Ignition switch on (IG), Accelerator pedal fully released	1.2 to 2.0 V
VPA2 (A24-19) - EPA2 (A24-21)	R - L-B	Accelerator pedal position sensor signal (for sensor malfunction detection)	Ignition switch on (IG), Accelerator pedal fully depressed	3.4 to 5.0 V
EPA (A24-20) - VPA (A24-18)	LG - W	Accelerator pedal position sensor signal (for engine control)	Ignition switch on (IG), Accelerator pedal fully released	0.5 to 1.1 V
EPA (A24-20) - VPA (A24-18)	LG - W	Accelerator pedal position sensor signal (for engine control)	Ignition switch on (IG), Accelerator pedal fully depressed	2.6 to 4.5 V
EPA2 (A24-21) - VPA2 (A24-19)	L-B - R	Accelerator pedal position sensor signal (for sensor malfunction detection)	Ignition switch on (IG), Accelerator pedal fully released	1.2 to 2.0 V
EPA2 (A24-21) - VPA2 (A24-19)	L-B - R	Accelerator pedal position sensor signal (for sensor malfunction detection)	Ignition switch on (IG), Accelerator pedal fully depressed	3.4 to 5.0 V
PPMP (A24-22) - E2 (B45-28)	V - W	Pressure sensor signal (built into pump module)	Ignition switch on (IG)	3 to 3.6 V
TC (A24-23) - E1 (B47-1)	P - BR	Terminal TC of DLC3	Ignition switch on (IG)	9 to 14 V
VCPA (A24-26) - EPA (A24-20)	B - LG	Power source of accelerator pedal position sensor (for VPA)	Ignition switch on (IG)	4.5 to 5.0 V
VCP2 (A24-27) - EPA2 (A24-21)	L - L-B	Power source of accelerator pedal position sensor (for VPA2)	Ignition switch on (IG)	4.5 to 5.0 V
LGND*3 (A24-31) - E1 (B47-1)	BR - BR	Laser sensor ground (for dynamic laser cruise control system)	Always	Below 1 Ω
TACH (D41-1) - E1 (B47-1)	W - BR	Engine speed signal (for combination meter)	Idling	Pulse generation (see waveform 11)
CCS (D41-2) - E1 (B47-1)	B - BR	Cruise control main switch signal	Ignition switch on (IG) CANCEL switch ON SET/COAST switch ON RES/ACC switch ON Main switch ON	10 to 16 V 6.6 to 10.1 V 4.5 to 7.1 V 2.3 to 4.0 V Below 1 V
CCHG*3 (D41-4) - E1 (B47-1)	Y - BR	Distance control switch signal	Ignition switch on (IG) Cruise control main switch ON MODE switch ON → MODE switch OFF	Below 1 V → 10 to 14 V
SPD (D41-8) - E1 (B47-1)	GR - BR	Vehicle speed signal from combination meter	Ignition switch on (IG), Rotate driving wheel slowly	Pulse generation (see waveform 8)
W (D41-30) - E1 (B47-1)	R - BR	Malfunction Indicator Lamp (MIL) operation signal	Ignition switch on (IG)	Below 3.0 V
W (D41-30) - E1 (B47-1)	R - BR	Malfunction Indicator Lamp (MIL) operation signal	Idling	9 to 14 V
F/PS (D41-32) - E1 (B47-1)	R - BR	Airbag sensor assembly	Idling with warm engine	Pulse generation (see waveform 12)
CANH (D41-33) - CANL (D41-34)	G - W	CAN communication circuit	Ignition switch off	54 to 69 Ω
CANL (D41-34) - CANH (D41-33)	W - G	CAN communication circuit	Ignition switch off	54 to 69 Ω
E1 (B47-1) - Body ground	BR - -	Earth (ground) circuit of ECM	Always	Below 1 V

Symbols (Terminal No.)	Wiring Colors	Terminal Descriptions	Conditions	STD Voltages
#10 (B47-2) - E01 (B45-7) #20 (B47-3) - E01 (B45-7) #30 (B47-4) - E01 (B45-7) #40 (B47-5) - E01 (B45-7) #50 (B47-6) - E01 (B45-7) #60 (B47-7) - E01 (B45-7)	L - W-B Y - W-B B - W-B W - W-B W-L - W-B G - W-B	Fuel injector operation signal	Ignition switch on (IG)	9 to 14 V
#10 (B47-2) - E01 (B45-7) #20 (B47-3) - E01 (B45-7) #30 (B47-4) - E01 (B45-7) #40 (B47-5) - E01 (B45-7) #50 (B47-6) - E01 (B45-7) #60 (B47-7) - E01 (B45-7)	L - W-B Y - W-B B - W-B W - W-B W-L - W-B G - W-B	Fuel injector operation signal	Idling	Pulse generation (see waveform 3)
PSW (B47-10) - E1 (B47-1)	W-R - BR	P/S pressure switch signal	Ignition switch on (IG)	9 to 14 V
STA (B47-11) - E1 (B47-1)	B - BR	Starter relay operation signal	Cranking	9 to 14 V
STSW*2 (B47-12) - E1 (B47-1)	B-W - BR	Starter relay operation signal	Cranking	9 to 14 V
OC2- (B47-14) - OC2+ (B47-15)	L-B - BR	Camshaft timing Oil Control Valve (OCV) operation signal (Intake side)	Ignition switch on (IG)	Pulse generation (see waveform 1)
OC2+ (B47-15) - OC2- (B47-14)	BR - L-B	Camshaft timing Oil Control Valve (OCV) operation signal (Intake side)	Ignition switch on (IG)	Pulse generation (see waveform 1)
OC1- (B47-16) - OC1+ (B47-17)	L - Y	Camshaft timing Oil Control Valve (OCV) operation signal (Intake side)	Ignition switch on (IG)	Pulse generation (see waveform 1)
OC1+ (B47-17) - OC1- (B47-16)	Y - L	Camshaft timing Oil Control Valve (OCV) operation signal (Intake side)	Ignition switch on (IG)	Pulse generation (see waveform 1)
VV2+ (B47-18) - VV2- (B47-28)	P - L	Variable Valve Timing (VVT) sensor signal (Intake side)	Idling	Pulse generation (see waveform 5)
VV1+ (B47-19) - VV1- (B47-29)	G - R	Variable Valve Timing (VVT) sensor signal (Intake side)	Idling	Pulse generation (see waveform 5)
NE- (B47-20) - NE+ (B47-21)	B - W	Crankshaft position sensor signal	Idling	Pulse generation (see waveform 5)
NE+ (B47-21) - NE- (B47-20)	W - B	Crankshaft position sensor signal	Idling	Pulse generation (see waveform 5)
EV2- (B47-22) - EV2+ (B47-23)	R - L	Variable Valve Timing (VVT) sensor signal (Exhaust side)	Idling	Pulse generation (see waveform 5)
EV2+ (B47-23) - EV2- (B47-22)	L - R	Variable Valve Timing (VVT) sensor signal (Exhaust side)	Idling	Pulse generation (see waveform 5)
EV1- (B47-24) - EV1+ (B47-25)	W - B	Variable Valve Timing (VVT) sensor signal (Exhaust side)	Idling	Pulse generation (see waveform 5)
EV1+ (B47-25) - EV1- (B47-24)	B - W	Variable Valve Timing (VVT) sensor signal (Exhaust side)	Idling	Pulse generation (see waveform 5)
OE1+ (B47-26) - OE1- (B47-31)	W-R - B-W	Camshaft timing Oil Control Valve (OCV) operation signal (Exhaust side)	Ignition switch on (IG)	Pulse generation (see waveform 1)

Symbols (Terminal No.)	Wiring Colors	Terminal Descriptions	Conditions	STD Voltages
OE2+ (B47-27) - OE2- (B47-32)	G-R - W-L	Camshaft timing Oil Control Valve (OCV) operation signal (Exhaust side)	Ignition switch on (IG)	Pulse generation (see waveform 1)
VV2- (B47-28) - VV2+ (B47-18)	L - P	Variable Valve Timing (VVT) sensor signal (Intake side)	Idling	Pulse generation (see waveform 5)
VV1- (B47-29) - VV1+ (B47-19)	R - G	Variable Valve Timing (VVT) sensor signal (Intake side)	Idling	Pulse generation (see waveform 5)
OE1- (B47-31) - OE1+ (B47-26)	B-W - W-R	Camshaft timing Oil Control Valve (OCV) operation signal (Exhaust side)	Ignition switch on (IG)	Pulse generation (see waveform 1)
OE2- (B47-32) - OE2+ (B47-27)	W-L - G-R	Camshaft timing Oil Control Valve (OCV) operation signal (Exhaust side)	Ignition switch on (IG)	Pulse generation (see waveform 1)
HT1B (B45-1) - E1 (B47-1) HT2B (B46-5) - E1 (B47-1)	R - BR R - BR	Heated oxygen sensor heater operation signal	Idling	Below 3.0 V
HT1B (B45-1) - E1 (B47-1) HT2B (B46-5) - E1 (B47-1)	R - BR R - BR	Heated oxygen sensor heater operation signal	Ignition switch on (IG)	9 to 14 V
ACM (B45-3) - E1 (B47-1)	G - BR	VSV for active control mount system operation signal	Ignition switch on (IG)	9 to 14 V
M- (B45-4) - ME01 (B46-3)	W - W-B	Throttle drive motor operation signal (negative terminal)	Idling with warm engine	Pulse generation (see waveform 10)
M+ (B45-5) - ME01 (B46-3)	B - W-B	Throttle drive motor operation signal (positive terminal)	Idling with warm engine	Pluse generation (see waveform 9)
E02 (B45-6) - Body ground	W-B - -	Earth (ground) circuit of ECM	Always	Below 1 V
E01 (B45-7) - Body ground	W-B - -	Earth (ground) circuit of ECM	Always	Below 1 V
IGT1 (B45-8) - E1 (B47-1) IGT2 (B45-9) - E1 (B47-1) IGT3 (B45-10) - E1 (B47-1) IGT4 (B45-11) - E1 (B47-1) IGT5 (B45-12) - E1 (B47-1) IGT6 (B45-13) - E1 (B47-1)	Y - BR P - BR G - BR L - BR B - BR BR - BR	Ignition coil with igniter (ignition signal)	Idling	Pulse generation (see waveform 6)
GE01 (B45-17) - E1 (B47-1)	- - BR	Shielded earth (ground) circuit of throttle drive motor	Always	Below 1 V
OX1B (B45-18) - E2 (B45-28) OX2B (B46-33) - E2 (B45-28)	B - W B - W	Heated oxygen sensor signal	With engine speed at 2,500 rpm for 2 minutes after warming up	Pulse generation (see waveform 2)
VTA2 (B45-19) - E2 (B45-28)	L-B - W	Throttle position sensor signal (for sensor malfunction detection)	Ignition switch on (IG), Accelerator pedal fully released	2.1 to 3.1 V
VTA2 (B45-19) - E2 (B45-28)	L-B - W	Throttle position sensor signal (for sensor malfunction detection)	Ignition switch on (IG), Accelerator pedal fully depressed	4.5 to 5.0 V
VTA1 (B45-20) - E2 (B45-28)	G-R - W	Throttle position sensor signal (for engine control)	Ignition switch on (IG), Throttle valve fully closed	0.5 to 1.2 V
VTA1 (B45-20) - E2 (B45-28)	G-R - W	Throttle position sensor signal (for engine control)	Ignition switch on (IG), Throttle valve fully open	3.2 to 4.8 V
THW (B45-21) - E2 (B45-28)	B-W - W	Engine coolant temperature sensor signal	Idling, Engine coolant temperature 80°C (176°F)	0.2 to 1.0 V
THA (B45-22) - E2 (B45-28)	W-L - W	Intake air temperature sensor signal	Idling, Intake air temperature 20°C (68°F)	0.5 to 3.4 V

Symbols (Terminal No.)	Wiring Colors	Terminal Descriptions	Conditions	STD Voltages
VC (B45-23) - E2 (B45-28)	R - W	Power source of sensors (specific voltage)	Ignition switch on (IG)	4.5 to 5.0 V
IGF1 (B45-24) - E1 (B47-1)	W - BR	Ignition coil with igniter (ignition confirmation signal)	Ignition switch on (IG)	4.5 to 5.0 V
IGF1 (B45-24) - E1 (B47-1)	W - BR	Ignition coil with igniter (ignition confirmation signal)	Idling	Pulse generation (see waveform 6)
AICV (B45-27) - E1 (B47-1)	P - BR	VSV for Air intake control system operation signal	Ignition switch on (IG)	9 to 14 V
E2 (B45-28) - E1 (B47-1)	W - BR	Earth (ground) circuit of sensors for ETCS	Always	Below 1 V
E2G (B45-29) - E1 (B47-1)	W-R - BR	Earth (ground) circuit of sensor for mass air flow meter	Always	Below 1 V
VG (B45-30) - E2G (B45-29)	R - W-R	Mass Air Flow (MAF) meter signal	Idling, Shift lever position P or N, A/C switch OFF	0.5 to 3.0 V
ACIS (B45-33) - E1 (B47-1)	L - BR	VSV for ACIS (Acoustic Control Induction System) operation signal	Ignition switch on (IG)	9 to 14 V
PRG (B45-34) - E1 (B47-1)	G - BR	Purge VSV for EVAP system operation signal	Ignition switch on (IG)	9 to 14 V
PRG (B45-34) - E1 (B47-1)	G - BR	Purge VSV for EVAP system operation signal	Idling	Pulse generation (see waveform 7)
HA2A (B46-1) - E05 (B46-6)	B - W-B	A/F sensor heater operation signal	Idling	Below 3.0 V
HA2A (B46-1) - E05 (B46-6)	B - W-B	A/F sensor heater operation signal	Ignition switch on (IG)	9 to 14 V
HA1A (B46-2) - E04 (B46-7)	L - W-B	A/F sensor heater operation signal	Idling	Below 3.0 V
HA1A (B46-2) - E04 (B46-7)	L - W-B	A/F sensor heater operation signal	Ignition switch on (IG)	9 to 14 V
ME01 (B46-3) - E1 (B47-1)	W-B - BR	Earth (ground) circuit of ECM	Always	Below 1 V
E03 (B46-4) - E1 (B47-1)	W-B - BR	Earth (ground) circuit of ECM	Always	Below 1 V
HT2B (B46-5) - E1 (B47-1) HT1B (B45-1) - E1 (B47-1)	R - BR R - BR	Heated oxygen sensor heater operation signal	Idling	Below 3.0 V
HT2B (B46-5) - E1 (B47-1) HT1B (B45-1) - E1 (B47-1)	R - BR R - BR	Heated oxygen sensor heater operation signal	Ignition switch on (IG)	9 to 14 V
E05 (B46-6) - E1 (B47-1)	W-B - BR	Earth (ground) circuit of ECM	Always	Below 1 V
E04 (B46-7) - E1 (B47-1)	W-B - BR	Earth (ground) circuit of ECM	Always	Below 1 V
STAR (B46-8) - E1 (B47-1)	W-R - BR	Park/Neutral position switch signal	Ignition switch on (IG), Shift lever position P or N	Below 3.0 V
STAR (B46-8) - E1 (B47-1)	W-R - BR	Park/Neutral position switch signal	Ignition switch on (IG), Shift lever position other than P or N	9 to 14 V
EKN2 (B46-20) - KNK2 (B46-21)	G - R	Earth (ground) circuit of knock sensor	With engine speed at 4,000 rpm after warming up	Pulse generation (see waveform 4)
KNK2 (B46-21) - EKN2 (B46-20)	R - G	Knock sensor signal	With engine speed at 4,000 rpm after warming up	Pulse generation (see waveform 4)
A1A+ (B46-22) - E1 (B47-1)	BR - BR	A/F sensor signal	Ignition switch on (IG)	3.3 V*1
A1A+ (B46-22) - E1 (B47-1)	BR - BR	A/F sensor signal	Ignition switch on (IG)	3.0 V*1
A2A+ (B46-23) - E1 (B47-1)	P - BR	A/F sensor signal	Ignition switch on (IG)	3.3 V*1
A2A+ (B46-23) - E1 (B47-1)	P - BR	A/F sensor signal	Ignition switch on (IG)	3.0 V*1

ES

Symbols (Terminal No.)	Wiring Colors	Terminal Descriptions	Conditions	STD Voltages
EKNK (B46-28) - KNK1 (B46-29)	W - B	Earth (ground) circuit of knock sensor	With engine speed at 4,000 rpm after warming up	Pulse generation (see waveform 4)
KNK1 (B46-29) - EKNK (B46-28)	B - W	Knock sensor signal	With engine speed at 4,000 rpm after warming up	Pulse generation (see waveform 4)
A1A- (B46-30) - E1 (B47-1)	Y - BR	A/F sensor	Ignition switch on (IG)	3.3 V*1
A1A- (B46-30) - E1 (B47-1)	Y - BR	A/F sensor	Ignition switch on (IG)	3.0 V*1
A2A- (B46-31) - E1 (B47-1)	L - BR	A/F sensor	Ignition switch on (IG)	3.3 V*1
A2A- (B46-31) - E1 (B47-1)	L - BR	A/F sensor	Ignition switch on (IG)	3.0 V*1
OX2B (B46-33) - E2 (B45-28) OX1B (B45-18) - E2 (B45-28)	B - W B - W	Heated oxygen sensor signal	With engine speed at 2,500 rpm for 2 minutes after warming up	Pulse generation (see waveform 2)

ES

*1: The ECM terminal voltage is constant regardless of the output voltage from the sensor.

*2: With Smart Key system

*3: With Dynamic Radar Cruise Control system

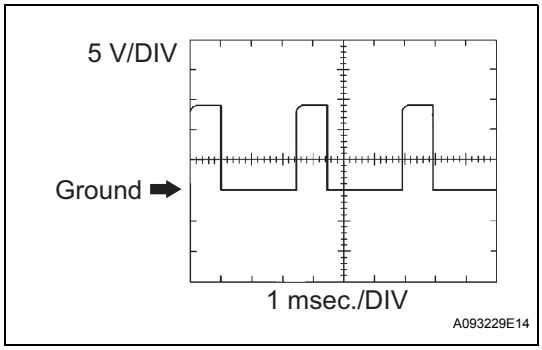

(a) WAVEFORM 1

(1) Camshaft timing Oil Control Valve (OCV) operation signal

ECM Terminal Names	Between OC1+ and OC1- , OC2+ and OC2- , OE1+ and OE1- , or OE2+ and OE2-
Tester Ranges	5 V/DIV, 1 msec./DIV
Conditions	Idling

HINT:
The wavelength becomes shorter as the engine rpm increases.

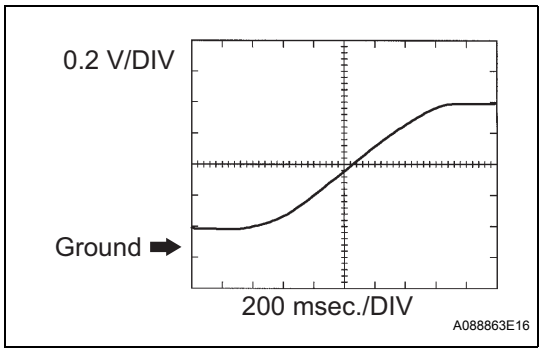

(b) WAVEFORM 2

(1) Heated oxygen sensor signal

ECM Terminal Names	Between OX1B and E2, or OX2B and E2
Tester Ranges	0.2 V/DIV, 200 msec./DIV
Conditions	Engine speed is maintained at 2,500 rpm for 2 minutes after sensor is warmed up

HINT:
In the DATA LIST, item O2S B1S2 shows the ECM input values from the heated oxygen sensor.

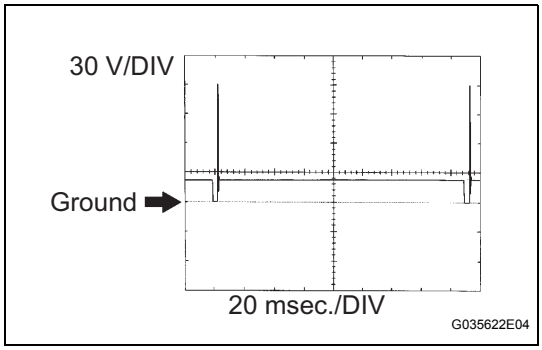

(c) WAVEFORM 3

(1) Fuel injector operation signal

ECM Terminal Names	Between #10 (to 60) and E01
Tester Ranges	30 V/DIV, 20 msec./DIV
Conditions	Idling

HINT:
The wavelength becomes shorter as the engine rpm increases.

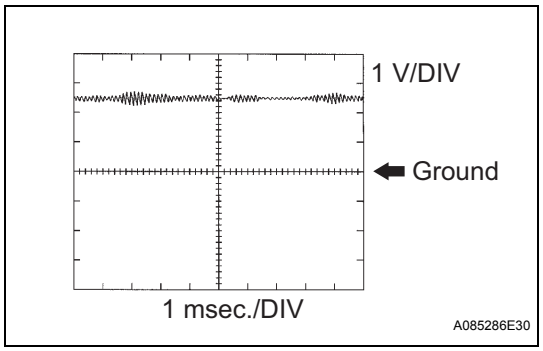

(d) WAVEFORM 4
(1) Knock sensor signal

ECM Terminal Names	Between KNK1 and EKNK, or KNK2 and EKN2
Tester Ranges	0.01 to 10 V/DIV, 0.01 to 10 msec./DIV
Conditions	Engine speed is maintained at 4,000 rpm after engine is warmed up

HINT:
- The wavelength becomes shorter as the engine rpm increases.
- The waveforms and amplitudes displayed differ slightly depending on the vehicle.

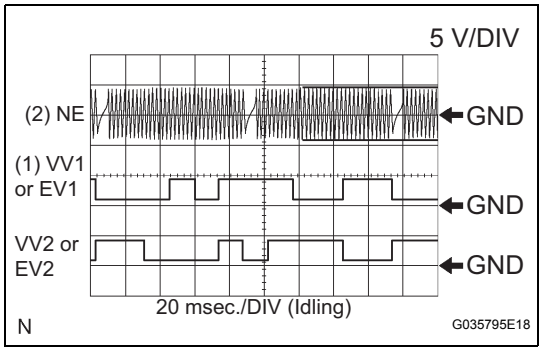

(e) WAVEFORM 5
(1) Variable Valve Timing (VVT) sensor signal (1)
(2) Crankshaft position sensor signal (2)

ECM Terminal Names	(1) Between VV1+ and VV1- , VV2+ and VV2-, EV1+ and EV1-, or EV2+ and EV2- (2) Between NE+ and NE-
Tester Ranges	5 V/DIV, 20 msec./DIV
Conditions	Idling

HINT:
The wavelength becomes shorter as the engine rpm increases.

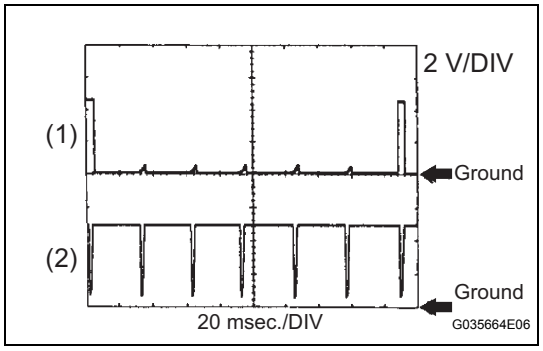

(f) WAVEFORM 6
(1) Igniter IGT signal (from ECM to igniter) (1)
(2) Igniter IGF signal (from igniter to ECM) (2)

ECM Terminal Names	(1) Between IGT (1 to 6) and E1 (2) Between IGF1 and E1
Tester Ranges	2 V/DIV, 20 msec./DIV
Conditions	Idling

HINT:
The wavelength becomes shorter as the engine rpm increases.

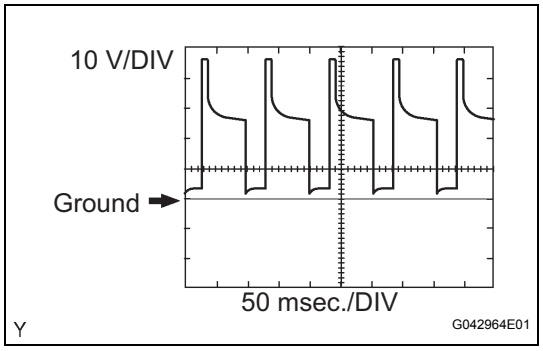

(g) WAVEFORM 7
(1) Purge VSV for EVAP system operation signal

ECM Terminal Names	Between PRG and E1
Tester Ranges	10 V/DIV, 50 msec./DIV
Conditions	Idling

HINT:
If the waveform is not similar to that shown in the illustration, check the waveform again after idling for 10 minutes or more.

ES

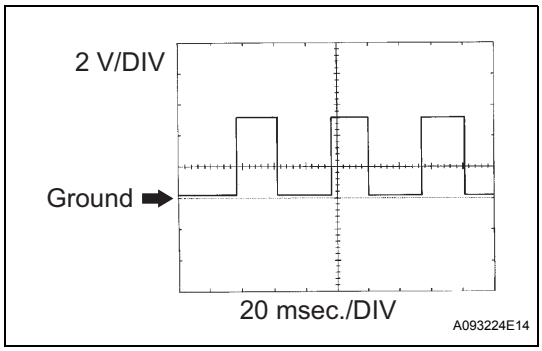

(h) WAVEFORM 8
(1) Vehicle speed signal

ECM Terminal Names	Between SPD and E1
Tester Ranges	2 V/DIV, 20 msec./DIV
Conditions	Driving at 12 mph (20 km/h)

HINT:
- The wavelength becomes shorter as the vehicle speed increases.
- Depending on the vehicle, the output waveform voltage may rise to 12 V if influenced by optionally installed systems.

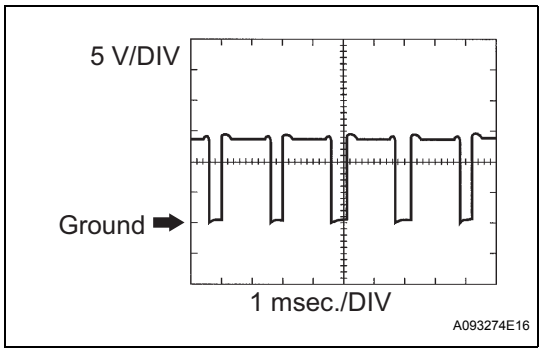

(i) WAVEFORM 9
(1) Throttle drive motor operation signal (positive terminal)

ECM Terminal Names	Between M+ and ME01
Tester Ranges	5 V/DIV, 1 msec./DIV
Conditions	Idling with warm engine

HINT:
The duty ratio varies depending on the throttle actuator operation.

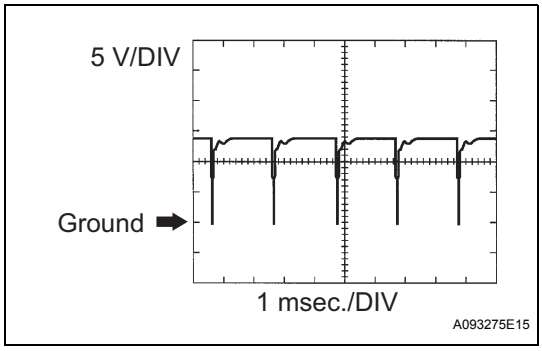

(j) WAVEFORM 10
(1) Throttle drive motor operation signal (negative terminal)

ECM Terminal Names	Between M- and ME01
Tester Ranges	5 V/DIV, 1 msec./DIV
Conditions	Idling with warm engine

HINT:
The duty ratio varies depending on the throttle actuator operation.

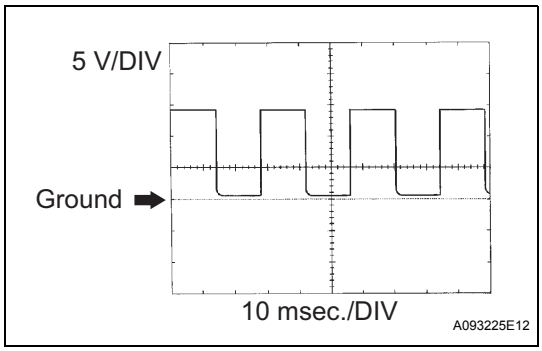

(k) WAVEFORM 11
(1) Engine speed signal

ECM Terminal Names	Between TACH and E1
Tester Ranges	5 V/DIV, 10 msec./DIV
Conditions	Idling

HINT:
The wavelength becomes shorter as the engine rpm increases.

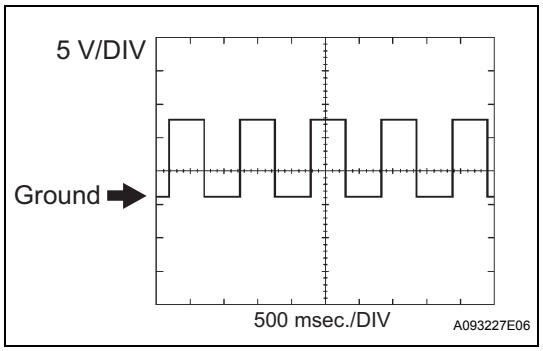

(I) WAVEFORM 12
(1) Airbag sensor assembly

ECM Terminal Names	Between F/PS and E1
Tester Ranges	5 V/DIV, 500 msec./DIV
Conditions	Idling with warm engine

DIAGNOSIS SYSTEM

1. DESCRIPTION

(a) When troubleshooting OBD II (On-Board Diagnostics) vehicles, a intelligent tester (complying with SAE J1987) must be connected to the DLC3 (Data Link Connector 3) of the vehicle. Various data in the vehicle's ECM (Engine Control Module) can be then read.

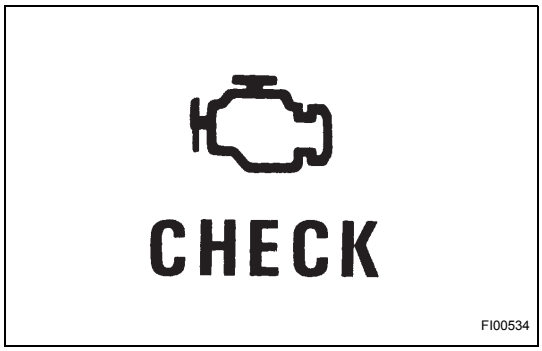

(b) OBD II regulations require that the vehicle's on-board computer illuminates the MIL (Malfunction Indicator Lamp) on the instrument panel when the computer detects a malfunction in:
(1) The emission control systems and components
(2) The power train control components (which affect vehicle emissions)
(3) The computer itself
In addition, the applicable DTCs (Diagnostic Trouble Codes) prescribed by SAE J2012 are recorded on 3 consecutive trips, the MIL turns off automatically but the DTCs remain recorded in the ECM memory.

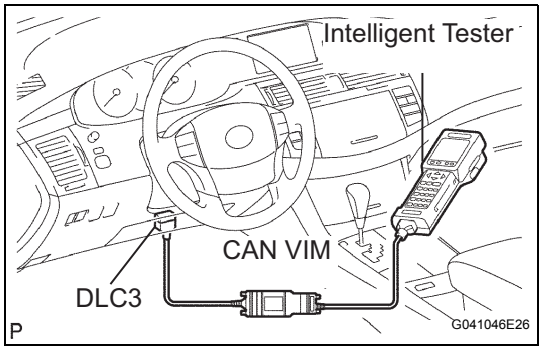

(c) To check DTCs, connect an intelligent tester to the DLC3. The tester displays DTCs, freeze frame data, and a variety of engine data. The DTCs and freeze frame data can be erased with the tester (See page ES-44).

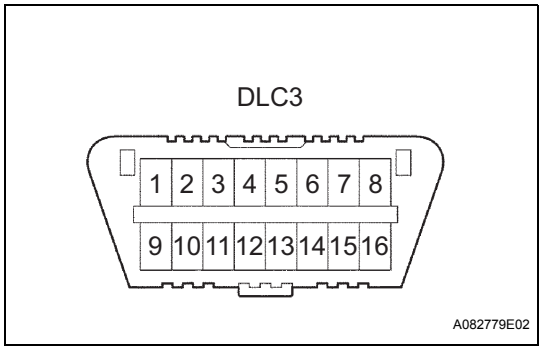

In order to enhance OBD function on vehicles and develop the Off-Board diagnosis system, CAN communication is introduced in this system (CAN: Controller Area Network). It minimizes a gap between technician skills and vehicle technology. CAN is a network, which uses a pair of data transmission lines, spanning multiple computers and sensors. It allows a high speed communication between the systems and to simplify the wire harness connection.
Since this system is equipped with the CAN communication, connecting the CAN VIM (VIM: Vehicle Interface Module) with an intelligent tester is necessary to display any information from the ECM. (Also the communication between the intelligent tester and the ECM uses CAN communication signal.) When confirming the DTCs and any data of the ECM, connect the CAN VIM between the DLC3 and the intelligent tester.

2. NORMAL MODE AND CHECK MODE

(a) The diagnosis system operates in normal mode during normal vehicle use. In normal mode, 2 trip detection logic is used to ensure accurate detection of malfunctions. Check mode is also available as an option for technicians. In check mode, 1 trip detection logic is used for simulating malfunction symptoms and increasing the system's ability to detect malfunctions, including intermittent problems (intelligent tester only) (See page ES-48).

3. 2 TRIP DETECTION LOGIC

(a) When a malfunction is first detected, the malfunction is temporarily stored in the ECM memory (1st trip). If the same malfunction is detected during the next subsequent drive cycle, the MIL is illuminated (2nd trip).

4. FREEZE FRAME DATA

(a) The ECM records vehicle and driving condition information as freeze frame data the moment a DTC is stored. When troubleshooting, freeze frame data can be helpful in determining whether the vehicle was running or stopped, whether the engine was warmed up or not, whether the air/fuel ratio was lean or rich, as well as other data recorded at the time of a malfunction.

5. DLC3 (Data Link Connector 3)

(a) The vehicle's ECM uses the ISO 15765-4 for communication protocol. The terminal arrangement of the DLC3 complies with SAE J1962 and matches the ISO 15765-4 format.

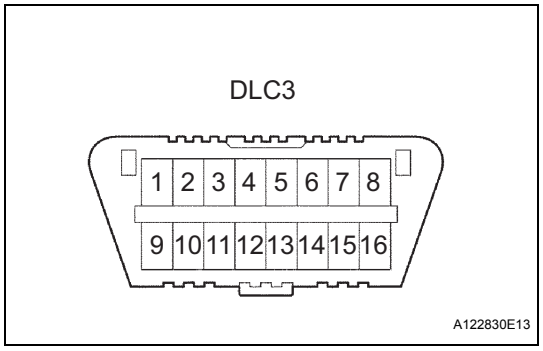

Symbols	Terminal No.	Names	Reference terminals	Results	Conditions
SIL	7	Bus "+" line	5 - Signal ground	Pulse generation	During transmission
CG	4	Chassis ground	Body ground	1 Ω or less	Always
SG	5	Signal ground	Body ground	1 Ω or less	Always
BAT	16	Battery positive	Body ground	9 to 14 V	Always
CANH	6	CAN "High" line	14 - CANL	54 to 69 Ω	Ignition switch off
CANH	6	CAN "High" line	Battery positive	1 MΩ or higher	Ignition switch off
CANH	6	CAN "High" line	4 - CG	1 kΩ or higher	Ignition switch off
CANL	14	CAN "Low" line	Battery positive	1 MΩ or higher	Ignition switch off
CANL	14	CAN "Low" line	4 - CG	1 kΩ or higher	Ignition switch off

HINT:

The DLC3 is the interface prepared for reading various data from the vehicle's ECM. After connecting the cable of an intelligent tester, turn the ignition switch on (IG) and turn the tester ON.

- If a communication failure message is displayed on the tester screen (on the tester: UNABLE TO CONNECT TO VEHICLE), a problem exists in either the vehicle or tester. In order to identify the location of the problem, connect the tester to another vehicle.
- If communication is normal: Inspect the DLC3 on the original vehicle.
- If communication is impossible: The problem is probably with the tester itself. Consult the Service Department listed in the instruction manual.

ES

6. BATTERY VOLTAGE

Battery Voltage:

11 to 14 V

If the voltage is below 11 V, recharge the battery before proceeding.

7. MIL (Malfunction Indicator Lamp)

(a) The MIL is illuminated when the ignition switch is first turned on (IG) (the engine is not running).

(b) The MIL should turn off when the engine is started. If the MIL remains illuminated, the diagnosis system has detected a malfunction or abnormality in the system.

HINT:

If the MIL is not illuminated when the ignition switch is first turned on (IG), check the MIL circuit (See page ES-421).

DTC CHECK / CLEAR

NOTICE:
All the stored DTCs and freeze frame data are erased if: 1) the ECM is changed from normal mode to check mode or vice versa; or 2) the ignition switch is turned from on (IG) to on (ACC) or off while in check mode.
Before changing modes, always check and make a note of any DTCs and freeze frame data.
HINT:

- DTCs which are stored in the ECM can be displayed on an intelligent tester. An intelligent tester can display current and pending DTCs.
- Some DTCs are not set if the ECM does not detect the same malfunction again during the second consecutive driving cycle. However, such malfunctions, detected on only one occasion, are stored as pending DTCs.

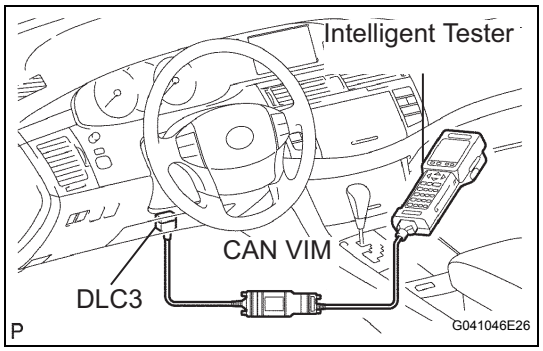

1. CHECK DTC (Using an intelligent tester)
(a) Connect the intelligent tester to the DLC3.
(b) Turn the ignition switch on (IG).
(c) Turn the tester ON.
(d) Select the following menu items: DIAGNOSIS / ENHANCED OBD II / DTC INFO / CURRENT CODES.
(e) Check the DTC(s) and freeze frame data, and then write them down.
(f) Check the details of the DTC(s) (See page ES-60).

2. CLEAR DTC (Using the intelligent tester)
(a) Connect the intelligent tester to the DLC3.
(b) Turn the ignition switch on (IG).
(c) Turn the tester ON.
(d) Select the following menu items: DIAGNOSIS / ENHANCED OBD II / DTC INFO / CLEAR CODES.
(e) Press the YES button.

3. CLEAR DTC (Without using an intelligent tester)
(a) Perform either one of the following operations:
(1) Disconnect the negative battery cable for more than 1 minute.
(2) Remove the EFI No. 1 and ETCS fuses from the Relay Block (R/B) located inside the engine compartment for more than 1 minute.

FREEZE FRAME DATA

1. DESCRIPTION

(a) The ECM records vehicle and driving condition information as freeze frame data the moment a DTC is stored. When troubleshooting, freeze frame data can be helpful in determining whether the vehicle was running or stopped, whether the engine was warmed up or not, whether the air/fuel ratio was lean or rich, as well as other data recorded at the time of a malfunction.
HINT:
If it is impossible to replicate the problem even though a DTC is detected, confirm the freeze frame data.

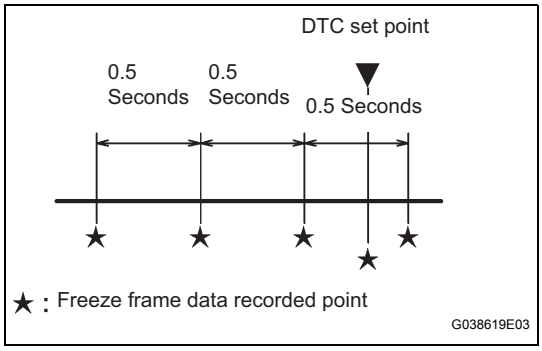

(b) The ECM records engine conditions in the form of freeze frame data every 0.5 seconds. Using the intelligent tester, five separate sets of freeze frame data, including the data values at the time when the DTC was set, can be checked.
- 3 data sets before the DTC was set
- 1 data set when the DTC was set
- 1 data set after the DTC was set

These data sets can be used to simulate the condition of the vehicle around the time of the occurrence of the malfunction. The data may assist in identifying of the cause of the malfunction, and in judging whether it was temporary or not.

2. LIST OF FREEZE FRAME DATA

LABEL (Intelligent Tester Display)	Measurement Item	Diagnostic Note
Freeze DTC	Freeze DTC	-
INJECTOR	Injector	-
IGN ADVANCE	Ignition advance	-
CALC LOAD	Calculate load	Calculated load by ECM
VEHICLE LOAD	Vehicle load	-
MAF	Mass air flow volume	If value approximately 0.0 g/s: • Mass air flow meter power source circuit open or short • VG circuit open or short If value 160.0 g/s or more: • E2G circuit open
ENGINE SPD	Engine speed	-
VEHICLE SPD	Vehicle speed	Speed indicated on speedometer
COOLANT TEMP	Engine coolant temperature	If value -40°C (-40°F), sensor circuit open If value 140°C (284°F), sensor circuit shorted
INTAKE AIR	Intake air temperature	If value -40°C (-40°F), sensor circuit open If value 140°C (284°F), sensor circuit shorted
AIR-FUEL RATIO	Air-fuel ratio	-
PURGE DENSITY	Learning value of purge density	-
PURGE FLOW	Purge flow	-
EVAP PURGE VSV	EVAP purge VSV duty ratio	-
KNOCK CRRT VAL	Correction learning value of knocking	-
KNOCK FB VAL	Feedback value of knocking	-

LABEL (Intelligent Tester Display)	Measurement Item	Diagnostic Note
EVAP VAPOR PRES	EVAP vapor pressure	-
ACCEL POS #1	Absolute Accelerator Pedal Position (APP) No. 1	-
ACCEL POS #2	Absolute APP No. 2	-
THROTTLE POS	Throttle position	Read value with ignition switch on (Do not start engine)
THROTTLE POS	Throttle sensor positioning	Read value with ignition switch on (Do not start engine)
THROTTLE POS#2	Throttle sensor positioning#2	Read value with ignition switch on (Do not start engine)
THROTTLE MOT	Throttle motor	-
O2S B1 S2	Heated oxygen sensor output	Performing INJ VOL or A/F CONTROL function of ACTIVE TEST enables technician to check voltage output of sensor
O2S B2 S2	Heated oxygen sensor output	Performing INJ VOL or A/F CONTROL function of ACTIVE TEST enables technician to check voltage output of sensor
AFS B1 S1	A/F sensor output	Performing INJ VOL or A/F CONTROL function of ACTIVE TEST enables technician to check voltage output of sensor
AFS B2 S1	A/F sensor output	Performing INJ VOL or A/F CONTROL function of ACTIVE TEST enables technician to check voltage output of sensor
TOTAL FT #1	Total fuel trim of bank 1	-
TOTAL FT #2	Total fuel trim of bank 2	-
SHORT FT #1	Short-term fuel trim of bank 1	Short-term fuel compensation used to maintain air-fuel ratio at stoichiometric air-fuel ratio
LONG FT #1	Long-term fuel trim of bank 1	Overall fuel compensation carried out in long-term to compensate a continual deviation of short-term fuel trim from central valve
SHORT FT #2	Short-term fuel trim of bank 2	Short-term fuel compensation used to maintain air-fuel ratio at stoichiometric air-fuel ratio
LONG FT #2	Long-term fuel trim of bank 2	Overall fuel compensation carried out in long-term to compensate a continual deviation of short-term fuel trim from central valve
FUEL SYS #1	Fuel system status (bank 1)	• OL (Open Loop): Has not yet satisfied conditions to go closed loop • CL (Closed Loop): Using heated oxygen sensor as feedback for fuel control • OL DRIVE: Open loop due to driving conditions (fuel enrichment) • OL FAULT: Open loop due to detected system fault • CL FAULT: Closed loop but heated oxygen sensor, which used for fuel control malfunctioning
FUEL SYS #2	Fuel system status (bank 2)	• OL (Open Loop): Has not yet satisfied conditions to go closed loop • CL (Closed Loop): Using heated oxygen sensor as feedback for fuel control • OL DRIVE: Open loop due to driving conditions (fuel enrichment) • OL FAULT: Open loop due to detected system fault • CL FAULT: Closed loop but heated oxygen sensor, which used for fuel control malfunctioning
O2FT B1 S2	Fuel trim at heated oxygen sensor	Same as SHORT FT #1

LABEL (Intelligent Tester Display)	Measurement Item	Diagnostic Note
O2FT B2 S2	Fuel trim at heated oxygen sensor	Same as SHORT FT #2
AF FT B1 S1	Fuel trim at A/F sensor	-
AF FT B2 S1	Fuel trim at A/F sensor	-
CAT TEMP B1 S1	Catalyst temperature	-
CAT TEMP B2 S1	Catalyst temperature	-
CAT TEMP B1 S2	Catalyst temperature	-
CAT TEMP B2 S2	Catalyst temperature	-
INI COOL TEMP	Initial engine coolant temperature	-
INI INTAKE TEMP	Initial intake air temperature	-
INJ VOL	Injection volume	-
ACC RELAY	ACC relay signal	-
STARTER RELAY	Starter relay signal	-
STARTER SIG	Starter signal	-
STARTER CONTROL	Starter control	-
PS SW	Power steering signal	-
PS SIGNAL	Power steering signal (history)	This signal status usually ON until ignition switch turned off
CTP SW	Closed throttle position switch	-
A/C SIG	A/C signal	-
ELECT LOAD SIG	Electrical load signal	-
STOP LIGHT SW	Stop light switch	-
BATTERY VOLTAGE	Battery voltage	-
ATM PRESSURE	Atmospheric pressure	-
ACIS VSV	VSV for Air Intake Control Induction System (AICS)	-
VVT CTRL B2	VVT control (bank 2 Intake side) status	-
EVAP (Purge) VSV	EVAP purge VSV	-
FUEL PUMP/SPD	Fuel pump speed status	VSV for EVAP controlled by ECM (ground side duty control)
VVT CTRL B1	VVT control (bank 1 Intake side) status	-
VACUUM PUMP	Key-off EVAP system pump status	-
EVAP VENT VAL	Key-off EVAP system vent valve status	-
FAN MOTOR	Electric fan motor	-
AICV VSV	VSV for Air Intake Control System (AICS)	-
TC/TE1	TC and TE1 terminals of DLC3	-
VVTL AIM ANGL #1	VVT aim angle	-
VVT CHNG ANGL #1	VVT change angle	-
VVT OCV DUTY B1	VVT OCV operation duty	-
VVT EX HOLD B1	VVT exhaust hold duty ratio learning value (bank 1 Exhaust side)	-
VVT EX CHG ANG1	VVT change angle (bank 1 Exhaust side)	-
VVT EX OCV D B1	VVT OCV (bank 1 Exhaust side) operation duty	-
VVTL AIM ANGL#2	VVT aim angle (bank 2 Intake side)	-
VVT CHNG ANGL#2	VVT change angle (bank 2 Intake side)	-
VVT OCV DUTY B2	VVT OCV (bank 2 Intake side) operation duty	-
VVT EX HOLD B2	VVT exhaust hold duty ratio learning value (bank 2 Exhaust side)	-
VVT EX CHG ANG2	VVT change angle (bank 2 Exhaust side)	-
VVT EX OCV D B2	VVT OCV (bank 2 Exhaust side) operation duty	-

LABEL (Intelligent Tester Display)	Measurement Item	Diagnostic Note
FC IDL	Idle fuel cut	ON: when throttle valve fully closed and engine speed over 1,500 rpm
FC TAU	FC TAU	Fuel cut initiated under light load to prevent incomplete combustion
IGNITION	Ignition	-
CYL #1	Cylinder #1 misfire rate	Displayed only during idling
CYL #2	Cylinder #2 misfire rate	Displayed only during idling
CYL #3	Cylinder #3 misfire rate	Displayed only during idling
CYL #4	Cylinder #4 misfire rate	Displayed only during idling
CYL #5	Cylinder #5 misfire rate	Displayed only during idling
CYL #6	Cylinder #6 misfire rate	Displayed only during idling
CYL ALL	All cylinder misfire rate	Displayed only during idling
MISFIRE RPM	Misfire RPM	-
MISFIRE LOAD	Misfire load	-
MISFIRE MARGIN	Misfire monitoring	-
ENG RUN TIME	Accumulated engine running time	-
TIME DTC CLEAR	Cumulative time after DTC cleared	-
DIST DTC CLEAR	Accumulated distance after DTC cleared	-
WU CYC DTC CLEAR	Warm-up cycle after DTC cleared	-

CHECK MODE PROCEDURE

HINT:
Intelligent tester only:
Compared to normal mode, check mode is more sensitive to malfunctions. Therefore, check mode can detect the malfunctions that cannot be detected by normal mode.
NOTICE:
All the stored DTCs and freeze frame data are erased if: 1) the ECM is changed from normal mode to check mode or vice versa; or 2) the ignition switch is turned from on (IG) to on (ACC) or off while in check mode.
Before changing modes, always check and make a note of any DTCs and freeze frame data.

ES

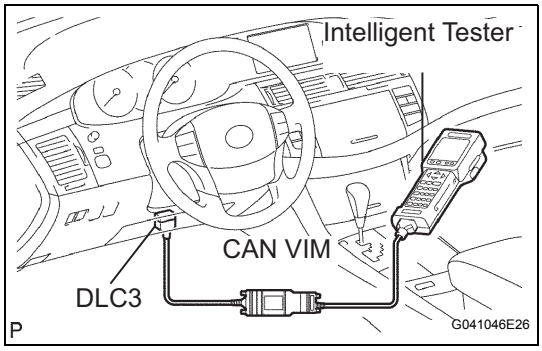

1. CHECK MODE PROCEDURE (Using an intelligent tester)

(a) Check and ensure the following conditions:
(1) Battery voltage 12 V or more
(2) Throttle valve fully closed
(3) The shift lever is in the P or N position
(4) A/C switched OFF
(b) Turn the ignition switch off.
(c) Connect an intelligent tester to the DLC3.
(d) Turn the ignition switch on (IG).
(e) Turn the tester ON.
(f) Select the following menu items: DIAGNOSIS / ENHANCED OBD II / CHECK MODE.
(g) Switch the ECM from normal mode to check mode.

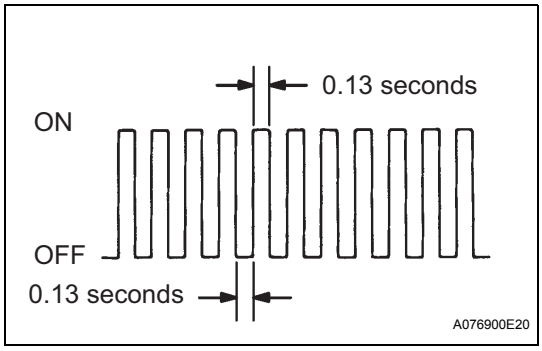

(h) Make sure the MIL flashes as shown in the illustration.
(i) Start the engine.
(j) Make sure the MIL goes off.
(k) Simulate the conditions of the malfunction described by the customer.
(l) Check DTCs and freeze frame data using the tester.

FAIL-SAFE CHART

If any of the following DTCs are set, the ECM enters fail-safe mode to allow the vehicle to be driven temporarily.

DTCs	Components	Fail-Safe Operations	Fail-Safe Deactivation Conditions
P0031, P0032, P0051 and P0052	Air-Fuel Ratio (A/F) Sensor Heater	ECM turns off A/F sensor heater	Ignition switch off
P0037, P0038, P0057 and P0058	Heated Oxygen (HO2) Sensor Heater	ECM turns off HO2 sensor heater	Ignition switch off
P0100, P0102 and P0103	Mass Air Flow (MAF) Meter	ECM calculates ignition timing according to engine speed and throttle valve position	Pass condition detected
P0110, P0112 and P0113	Intake Air Temperature (IAT) Sensor	ECM estimates IAT to be 20°C (68°F)	Pass condition detected
P0115, P0117 and P0118	Engine Coolant Temperature (ECT) Sensor	ECM estimates ECT to be 80°C (176°F)	Pass condition detected
P0120, P0121, P0122, P0123, P0220, P0222, P0223, P0604, P0606, P0607, P0657, P2102, P2103, P2111, P2112, P2118, P2119 and P2135	Electronic Throttle Control System (ETCS)	ECM cuts off throttle actuator current and throttle valve returned to 6.5° throttle position by return spring ECM then adjusts engine output by controlling fuel injection (intermittent fuel-cut) and ignition timing in accordance with accelerator pedal opening angle, to allow vehicle to continue at minimal speed*	Pass condition detected and then ignition switch turned off
P0327, P0328, P0332 and P0333	Knock Sensor	ECM sets ignition timing to maximum retard	Ignition switch off
P0351 to P0356	Igniter	ECM cuts fuel	Pass condition detected
P2120, P2121, P2122, P2123, P2125, P2127, P2128 and P2138	Accelerator Pedal Position (APP) Sensor	APP sensor has 2 sensor circuits: Main and Sub If either of circuits malfunctions, ECM controls engine using the other circuit If both of circuits malfunction, ECM regards accelerator pedal as being released. As a result, throttle valve is closed and engine idles	Pass condition detected and then ignition switch turned off

NOTE:

*: The vehicle can be driven slowly when the accelerator pedal is depressed firmly and slowly. If the accelerator pedal is depressed quickly, the vehicle may speed up and slow down erratically.

DATA LIST / ACTIVE TEST

1. DATA LIST

HINT:

Reading the DATA LIST displayed on an intelligent tester enables values, including those of the switches, sensors, and actuators, to be checked without removing any parts. Reading the DATA LIST as the first step of troubleshooting is one method to shorten diagnostic time.

NOTICE:

In the table below, the values listed under Normal Condition are for reference only. Do not depend solely on these values when determining whether or not a part is faulty.

(a) Warm up the engine.
(b) Turn the ignition switch off.
(c) Connect an intelligent tester to the DLC3.
(d) Start the engine.
(e) Turn the tester ON.
(f) Select the following menu items: DIAGNOSIS / ENHANCED OBD II / DATA LIST.
(g) Check the values by referring to the table below.

Intelligent Tester Display	Measurement Item: Range (Display)	Normal Condition*	Diagnostic Note
INJECTOR	Injection period of No. 1 cylinder: Min.: 0 ms, Max.: 32.64 ms	1.2 to 2.4 ms: Idling	-
IGN ADVANCE	Ignition timing advance for No. 1 cylinder: Min.: -64 deg., Max.: 63.5 deg.	BTDC 7 to 24°: Idling	-
CALC LOAD	Load calculated by ECM: Min.: 0%, Max.: 100%	• 11.4 to 16.4%: Idling • 13.1 to 18.9%: Running without load (2,500 rpm)	-
VEHICLE LOAD	Vehicle load: Min.: 0%, Max.: 25,700%	Actual vehicle load	-
MAF	Air flow rate from MAF meter: Min.: 0 g/sec., Max.: 655.35 g/sec.	3.2 to 4.7 g/sec.: Idling 13.1 to 18.9 g/sec.: 2,500 rpm	If value is approximately 0.0 g/sec.: • Mass air flow meter power source circuit open • VG circuit open or short If value is 160.0 g/sec. or more: • E2G circuit open
ENGINE SPD	Engine speed: Min.: 0 rpm, Max.: 16,383.75 rpm	600 to 700 rpm: Idling	-
VEHICLE SPD	Vehicle speed: Min.: 0 km/h (0 mph), Max.: 255 km/h (158 mph)	Actual vehicle speed	Speed indicated on speedometer
COOLANT TEMP	Engine coolant temperature: Min.: -40°C (-40°F), Max.: 140°C (284°F)	80 to 100°C (176 to 212°F): After warming up	• If value is -40°C (-40°F): sensor circuit open • If value is 140°C (284°F): sensor circuit shorted
INTAKE AIR	Intake air temperature: Min.: -40°C (-40°F), Max.: 140°C (284°F)	Equivalent to ambient air temperature	• If value is -40°C (-40°F): sensor circuit open • If value is 140°C (284°F): sensor circuit shorted
AIR-FUEL RATIO	Air-fuel ratio: Min.: 0, Max.: 1.999	0.8 to 1.2: Idling	-
PURGE DENSITY	Learning value of purge density: Min.: -50, Max.: 350	-40 to 0%: Idling	Service data
PURGE FLOW	Purge flow: Min.: 0%, Max.: 102.4%	0 to 8%: Idling	-

Intelligent Tester Display	Measurement Item: Range (Display)	Normal Condition*	Diagnostic Note
EVAP PURGE VSV	EVAP (Purge) VSV control duty: Min.: 0%, Max.: 100%	0 to 100%: Idling	Order signal from ECM
VAPOR PRESSURE	Vapor pressure: Min.: 33.853 kPa, Max.: 125.596 kPa	0 kPa: Fuel tank cap removed	Pressure inside fuel tank monitored by vapor pressure sensor
VAPOR PRESS CALC	Vapor pressure: (calculated) Min.: -5.632 kPa, Max.: 715.264 kPa	0 kPa: Fuel tank cap removed	Pressure inside fuel tank monitored by vapor pressure sensor
KNOCK CRRT VAL	Correction learning value of knocking: Min.: -64 CA, Max.: 1,984 CA	0 to 22° CA: Driving, 44 mph (70 km/h)	Service data
KNOCK FB VAL	Feedback value of knocking: Min.: -64 CA, Max.: 1,984 CA	-22 to 0° CA Driving, 44 mph (70 km/h)	Service data
CLUTCH	Clutch current: Min.: 0 A, Max.: 2.49 A	-	-
EVAP VAPOR PRES	EVAP vapor pressure: Min.: 0 kPa, Max.: 327.675 kPa	0 kPa: Fuel tank cap removed	-
ACCEL POS #1	Absolute Accelerator Pedal Position (APP) No. 1: Min.: 0%, Max.: 100%	10 to 22%: accelerator pedal released 54 to 86%: accelerator pedal fully depressed	-
ACCEL POS #2	Absolute APP No. 2: Min.: 0 %, Max.: 100 %	12 to 42%: accelerator pedal released 66 to 98%: accelerator pedal fully depressed	-
ACCEL POS #1	APP sensor No. 1 voltage: Min.: 0 V, Max.: 4.98 V	-	ETCS freeze data
ACCEL POS #2	APP sensor No. 2 voltage: Min.: 0 V, Max.: 4.98 V	-	ETCS freeze data
ACCEL POS #1	APP sensor No. 1 voltage: Min.: 0 V, Max.: 5 V	0.5 to 1.1 V: accelerator pedal released. 2.6 to 4.5 V: accelerator pedal fully depressed.	-
ACCEL POS #2	APP sensor No. 2 voltage: Min.: 0 V, Max.: 5 V	1.2 to 2.0 V: accelerator pedal released. 3.4 to 5.0 V: accelerator pedal fully depressed.	-
ACCEL IDL POS	Whether or not accelerator pedal position sensor detecting idle: ON or OFF	ON: Idling	-
THRTL LEARN VAL	Throttle valve fully closed (learned value): Min.: 0 V, Max.: 5 V	0.4 to 0.8 V	-
ACCEL SSR #1 AD	Accelerator fully closed value No. 1 (AD): Min.: 0, Max.: 4.9804 V	-	ETCS service data
ACCEL LRN VAL#1	Accelerator fully closed learning value No. 1: Min.: 0, Max.: 124.512	-	ETCS service data
ACCEL LRN VAL#2	Accelerator fully closed learning value No. 2: Min.: 0, Max.: 124.512	-	ETCS service data
FAIL #1	Whether or not fail safe function executed: ON or OFF	ON: ETCS has failed	-
FAIL #2	Whether or not fail safe function executed (Main CPU): ON or OFF	ON: ETCS has failed	-
ST1	Starter signal: ON or OFF	ON: Cranking	-
SYS GUARD JUDGE	System guard: ON or OFF	-	ETCS service data
OPN MALFUNCTION	Open side malfunction: ON or OFF	-	ETCS service data

ES

Intelligent Tester Display	Measurement Item: Range (Display)	Normal Condition*	Diagnostic Note
THROTTLE POS	Absolute throttle position sensor: Min.: 0%, Max.: 100%	• 10 to 24%: Throttle fully closed • 64 to 96%: Throttle fully open	Read value with intrusive operation (active test)
THROTTL IDL POS	Whether or not throttle position sensor detecting idle: ON or OFF	ON: Idling	-
THRTL REQ POS	Throttle requirement position: Min.: 0 V, Max.: 5 V	0.5 to 1.0 V: Idling	-
THROTTLE POS	Throttle sensor positioning: Min.: 0%, Max.: 100%	10 to 18%: Idling	Calculated value based on VTA1
THROTTLE POS #2	Throttle sensor positioning #2: Min.: 0%, Max.: 100%	-	Calculated value based on VTA2
THROTTLE POS #1	Throttle position sensor No. 1 output voltage: Min.: 0 V, Max.: 4.98 V	-	ETCS freeze data
THROTTLE POS #2	Throttle position sensor No. 2 output voltage: Min.: 0 V, Max.: 4.98 V	-	ETCS freeze data
THROTTLE POS #1	Throttle position No. 1: Min.: 0 V, Max.: 5 V	• 0.5 to 1.2 V: Throttle fully closed • 3.2 to 4.8 V: Throttle fully opened	-
THROTTLE POS #2	Throttle position No. 2: Min.: 0 V, Max.: 5 V	• 2.0 to 2.9 V: Throttle fully closed • 4.6 to 5.0 V: Throttle fully open	Read value with intrusive operation (active test)
THRTL COMND VAL	Throttle position command value: Min.: 0 V, Max.: 4.9804 V	0.5 to 4.8 V	ETCS service data
THROTTLE SSR #1	Throttle sensor opener position No. 1: Min.: 0 V, Max.: 4.9804 V	0.6 to 0.9 V	ETCS service data
THROTTLE SSR #2	Throttle sensor opener position No. 2: Min.: 0 V, Max.: 4.9804 V	2.2 to 2.6 V	ETCS service data
THRTL SSR #1 AD	Throttle sensor opener position No. 1 (AD): Min.: 0 V, Max.: 4.9804 V	0.6 to 0.9 V	ETCS service data
THROTTLE MOT	Whether or not throttle motor control permitted: ON or OFF	ON: Idling	Read value with ignition switch on (IG) (Do not start engine)
THROTTLE MOT	Throttle motor current: Min.: 0 A, Max.: 80 A	0 to 3.0 A: Idling	-
THROTTLE MOT	Throttle motor: Min.: 0%, Max.: 100%	0.5 to 40%: Idling	-
THROTTLE MOT	Throttle motor current: Min.: 0 A, Max.: 19.92 A	0 to 3.0 A: Idling	-
THROTL OPN DUTY	Throttle motor opening duty ratio: Min.: 0%, Max.: 100%	0 to 40%: Idling	When accelerator pedal is depressed, duty ratio increases
THROTL CLS DUTY	Throttle motor closed duty ratio: Min.: 0%, Max.: 100%	0 to 40%: Idling	When accelerator pedal is released quickly, duty ratio increases
THRTL MOT (OPN)	Throttle motor duty ratio (open): Min.: 0%, Max.: 100%	-	ETCS service data
THRTL MOT (CLS)	Throttle motor duty ratio (close): Min.: 0%, Max.: 100%	-	ETCS service data
O2S B1 S2	Heated oxygen sensor output voltage for bank 1 sensor 2: Min.: 0 V, Max.: 1.275 V	0.1 to 0.9 V: Driving 44 mph (70 km/h)	Performing INJ VOL or A/F CONTROL function of ACTIVE TEST enables technician to check voltage output of sensor
O2S B2 S2	Heated oxygen sensor output voltage for bank 2 sensor 2: Min.: 0 V, Max.: 1.275 V	0.1 to 0.9 V: Driving 44 mph (70 km/h)	Performing INJ VOL or A/F CONTROL function of ACTIVE TEST enables technician to check voltage output of sensor

ES

Intelligent Tester Display	Measurement Item: Range (Display)	Normal Condition*	Diagnostic Note
AFS B1 S1	A/F sensor output voltage for bank 1 sensor 1: Min.: 0 V, Max.: 7.999 V	2.8 to 3.8 V: Idling	Performing INJ VOL or A/F CONTROL function of ACTIVE TEST enables technician to check voltage output of sensor
AFS B2 S1	A/F sensor output voltage for bank 2 sensor 1: Min.: 0 V, Max.: 7.999 V	2.8 to 3.8 V: Idling	Performing INJ VOL or A/F CONTROL function of ACTIVE TEST enables technician to check voltage output of sensor
TOTAL FT #1	Total fuel trim of bank 1 Average value for fuel trim system of bank 1: Min.: -0.5, Max.: 0.496	-0.2 to 0.2: Idling	-
TOTAL FT #2	Total fuel trim of bank 2 Average value for fuel trim system of bank 2: Min.: -0.5, Max.: 0.496	-0.2 to 0.2: Idling	-
SHORT FT #1	Short-term fuel trim of bank 1: Min.: -100%, Max.: 99.2%	0 +/- 20%	Short-term fuel compensation used to maintain air-fuel ratio at stoichiometric air-fuel ratio
LONG FT #1	Long-term fuel trim of bank 1: Min.: -100%, Max.: 99.2%	0 +/- 20%	Overall fuel compensation carried out in long-term to compensate for continual deviation of short-term fuel trim from central value
SHORT FT #2	Short-term fuel trim of bank 2: Min.: -100%, Max.: 99.2%	0 +/- 20%	Short-term fuel compensation used to maintain air-fuel ratio at stoichiometric air-fuel ratio
LONG FT #2	Long-term fuel trim of bank 2: Min.: -100%, Max.: 99.2%	0 +/- 20%	Overall fuel compensation carried out in long-term to compensate for continual deviation of short-term fuel trim from central value
FUEL SYS #1	Fuel system status (Bank 1): OL or CL or OL DRIVE or OL FAULT or CL FAULT	CL: Idling after warming up	• OL (Open Loop): Has not yet satisfied conditions to become a closed loop • CL (Closed Loop): Using heated oxygen sensor as feedback for fuel control • OL DRIVE: Open loop due to driving conditions (fuel enrichment) • OL FAULT: Open loop due to detected system fault • CL FAULT: Closed loop but heated oxygen sensor, used for fuel control, malfunctions
FUEL SYS #2	Fuel system status (Bank 2): OL or CL or OL DRIVE or OL FAULT or CL FAULT	CL: Idling after warming up	• OL (Open Loop): Has not yet satisfied conditions to go closed loop • CL (Closed Loop): Using heated oxygen sensor as feedback for fuel control • OL DRIVE: Open loop due to driving conditions (fuel enrichment) • OL FAULT: Open loop due to detected system fault • CL FAULT: Closed loop but heated oxygen sensor, used for fuel control, malfunctions
O2FT B1 S2	Short-term fuel trim associated with bank 1 sensor 2: Min.: -100%, Max.: 99.2%	0 +/- 20%	Same as SHORT FT #1
O2FT B2 S2	Short-term fuel trim associated with bank 2 sensor 2: Min.: -100%, Max.: 99.2%	0 +/- 20%	Same as SHORT FT #2

Intelligent Tester Display	Measurement Item: Range (Display)	Normal Condition*	Diagnostic Note
AF FT B1 S1	Short-term fuel trim associated with bank 1 sensor 1: Min.: 0, Max.: 1.999	• Value less than 1 (0.000 to 0.999) = Lean • Stoichiometric air-fuel ratio = 1 • Value greater than 1 (1.001 to 1.999) = RICH	-
AF FT B2 S1	Short-term fuel trim associated with bank 2 sensor 1: Min.: 0, Max.: 1.999	• Value less than 1 (0.000 to 0.999) = Lean • Stoichiometric air-fuel ratio = 1 • Value greater than 1 (1.001 to 1.999) = RICH	-
CAT TEMP B1S1	Catalyst temperature (Bank 1, Sensor 1): Min.: -40°C (-40°F), Max.: 6,513.5°C (11,756.3°F)	-	-
CAT TEMP B2S1	Catalyst temperature (Bank 2, Sensor 1): Min.: -40°C (-40°F), Max.: 6,513.5°C (11,756.3°F)	-	-
CAT TEMP B1S2	Catalyst temperature (Bank 1, Sensor 2): Min.: -40°C (-40°F), Max.: 6,513.5°C (11,756.3°F)	-	-
CAT TEMP B2S2	Catalyst temperature (Bank 2, Sensor 2): Min.: -40°C (-40°F), Max.: 6,513.5°C (11,756.3°F)	-	-
INI COOL TEMP	Initial engine coolant temperature: Min.: -40°C (-40°F), Max.: 120°C (248°F)	Close to ambient air temperature	Service data
INI INTAKE TEMP	Initial intake air temperature: Min.: -40°C (-40°F), Max.: 120°C (248°F)	Close to ambient air temperature	Service data
INJ VOL	Injection volume (cylinder 1): Min.: 0 ml, Max.: 2.048 ml	Max.: 0.5 ml	Quantity of fuel injected over 10 injections
ACC RELAY	ACC relay signal: ON or OFF	ON: ACC relay ON	-
STARTER RELAY	Starter relay signal: ON or OFF	ON: Starter relay ON	-
STARTER SIG	Starter signal: ON or OFF	ON: Cranking	-
STARTER CONTROL	Starter Control: ON or OFF	ON: Cranking	-
PS SW	Power steering signal: ON or OFF	ON: Power steering operation	-
PS SIGNAL	Power steering signal: ON or OFF	ON: Steering wheel is first turned after ignition switch is turned on (IG)	This signal status is usually ON until ignition switch is turned off
CTP SW	Closed throttle position switch: ON or OFF	• ON: Throttle fully closed • OFF: Throttle open	-
A/C SIG	A/C signal: ON or OFF	ON: A/C ON	-
ELECT LOAD SIG	Electrical load signal: ON or OFF	ON: Headlights or defogger turned ON	-
STOP LIGHT SW	Stop light switch: ON or OFF	ON: Brake pedal depressed	-
+BM	Whether or not electric throttle control system power input: ON or OFF	ON: Idling	-
+BM VOLTAGE	+BM voltage: Min.: 0, Max.: 19.92182 [V]	10 to 15 V: Idling	ETCS service data
BATTERY VOLTAGE	Battery voltage: Min.: 0 V, Max.: 65.535 V	9 to 14 V: Idling	-
ACTUATOR POWER	Actuator power supply: ON or OFF	ON: Idling	ETCS service data
ATM PRESSURE	Atmospheric pressure: Min.: 0 kPa, Max.: 125 kPa	Equivalent to atmospheric pressure (absolute pressure)	-

Intelligent Tester Display	Measurement Item: Range (Display)	Normal Condition*	Diagnostic Note
ACIS VSV	VSV for Acoustic Control Induction System Status: ON or OFF	-	ON: Open OFF: Closed
VVT CTRL B2	VVT control (bank 2) status: ON or OFF	-	Active Test support data
EVAP (Purge) VSV	VSV status for EVAP control: ON or OFF	-	Active Test support data
FUEL PUMP / SPD	Fuel pump/status: ON or OFF	-	Active Test support data
VVT CTRL B1	VVT control (bank 1) status: ON or OFF	-	Active Test support data
VACUUM PUMP	Key-off EVAP system pump status: ON or OFF	-	Active Test support data
EVAP VENT VAL	Key-off EVAP system vent valve status: ON or OFF	-	Active Test support data
FAN MOTOR	Electric fan motor: ON or OFF	-	Active Test support data
AICV VSV	VSV for Air Intake Control System Status: ON or OFF	-	-
TC/TE1	TC and TE1 terminals of DLC3: ON or OFF	-	-
VVTL AIM ANGL #1	VVT aim angle (bank 1 Intake side): Min.: 0%, Max.: 100%	0%: Idling	VVT duty signal value during intrusive operation
VVT CHNG ANGL #1	VVT change angle (bank 1 Intake side): Min.: 0° FR, Max.: 60° FR	0 to 5° FR: Idling	Displacement angle during intrusive operation
VVT OCV DUTY B1	VVT OCV (bank 1 Intake side) operation duty: Min.: 0%, Max.: 100%	10 to 50%: Idling	Requested duty value for intrusive operation
VVT EX HOLD B1	VVT exhaust hold duty ratio learning value (bank 1 Exhaust side): Min.: 0%, Max.: 100%	30 to 70%: Idling	Requested duty value for intrusive operation
VVT EX CHG ANG1	VVT change angle (bank 1 Exhaust side): Min.: 0° FR, Max.: 60° FR	0 to 5° % FR: Idling	Displacement angle during intrusive operation
VVT EX OCV D B1	VVT OCV (bank 1 Exhaust side) operation duty: Min.: 0%, Max.: 100%	10 to 50%: Idling	Requested duty value for intrusive operation
VVTL AIM ANGL #2	VVT aim angle (bank 2 Intake side): Min.: 0%, Max.: 100%	0%: Idling	VVT duty signal value during intrusive operation
VVT CHNG ANGL #2	VVT change angle (bank 2 Intake side): Min.: 0° FR, Max.: 60° FR	0 to 5° FR: Idling	Displacement angle during intrusive operation
VVT OCV DUTY B2	VVT OCV (bank 2 Intake side) operation duty: Min.: 0%, Max.: 100%	30 to 70%: Idling	Requested duty value for intrusive operation
VVT EX HOLD D B2	VVT exhaust hold duty ratio learning value (bank 2 Exhaust side): Min.: 0%, Max.: 100%	10 to 50%: Idling	Requested duty value for intrusive operation
VVT EX CHG ANG2	VVT change angle (bank 2 Exhaust side): Min.: 0° FR, Max.: 60° FR	0 to 5° FR: Idling	Displacement angle during intrusive operation
VVT EX OCV D B2	VVT exhaust (bank 2 Exhaust side) operation duty: Min.: 0%, Max.: 100%	0%: Idling	Requested duty value for intrusive operation
FC IDL	Fuel cut idle: ON or OFF	ON: Fuel cut operation	FC IDL = ON when throttle valve is fully closed and engine speed is over 2,800 rpm
FC TAU	Fuel cut TAU: Fuel cut during very light load: ON or OFF	ON: Fuel cut operation	Fuel cut being performed under very light load to prevent engine combustion from becoming incomplete

Intelligent Tester Display	Measurement Item: Range (Display)	Normal Condition*	Diagnostic Note
IGNITION	Ignition counter: Min.: 0, Max.: 800	0 to 800	-
CYL #1	Misfire ratio of cylinder 1: Min.: 0, Max.: 255	0%	This item displayed only during idling
CYL #2	Misfire ratio of cylinder 2: Min.: 0, Max.: 255	0%	This item displayed only during idling
CYL #3	Misfire ratio of cylinder 3: Min.: 0, Max.: 255	0%	This item displayed only during idling
CYL #4	Misfire ratio of cylinder 4: Min.: 0, Max.: 255	0%	This item displayed only during idling
CYL #5	Misfire ratio of cylinder 5: Min.: 0, Max.: 255	0%	This item displayed only during idling
CYL #6	Misfire ratio of cylinder 6: Min.: 0, Max.: 255	0%	This item displayed only during idling
CYL ALL	All cylinders misfire rate: Min.: 0, Max.: 255	0 to 35	-
MISFIRE RPM	Engine RPM for first misfire range: Min.: 0 rpm, Max.: 6,375 rpm	0 rpm: Misfire 0	-
MISFIRE LOAD	Engine load for first misfire range: Min.: 0 g/rev, Max.: 3.98 g/rev	0 g/rev: Misfire 0	-
MISFIRE MARGIN	Misfire monitoring: Min.: -100%, Max.: 99.22%	-100 to 99.2%	Misfire detecting margin
#CODES	#Codes: Min.: 0, Max.: 255	-	Number of detected DTCs
CHECK MODE	Check mode: 0: OFF, 1: ON	ON: Check mode ON	See page ES-48
SPD TEST	Check mode result for vehicle speed sensor: 0: COMPL, 1: INCMPL	-	-
MISFIRE TEST	Check mode result for misfire monitor: 0: COMPL, 1: INCMPL	-	-
OXS2 TEST	Check mode result for HO2 sensor (bank 2): 0: COMPL, 1: INCMPL	-	-
OXS1 TEST	Check mode result for HO2 sensor (bank 1): 0: COMPL, 1: INCMPL	-	-
A/F SSR TEST B2	Check mode result for air-fuel ratio sensor (bank 2): 0: COMPL, 1: INCMPL	-	-
A/F SSR TEST B1	Check mode result for air-fuel ratio sensor (bank 1): 0: COMPL, 1: INCMPL	-	-
MIL ON RUN DIST	MIL ON Run Distance: Min.: 0 km (0 mile), Max.: 65,535 km (40,723 mile)	Distance driven after DTC detected	-
MIL ON RUN TIME	Running time from MIL ON: Min.: 0 minute, Max.: 65,535 minutes	Running time after MIL ON	-
ENG RUN TIME	Engine run time: Min.: 0 second, Max.: 65,535 seconds	Time after engine start	Service data
TIME DTC CLEAR	Time after DTC cleared: Min.: 0 minute, Max.: 65,535 minutes	Time after DTCs erased	-
DIST DTC CLEAR	Distance after DTC cleared: Min.: 0 km (0 mile), Max.: 65,535 km/h (40,723 mile)	Distance driven after DTCs erased	-
WU CYC DTC CLEAR	Warm-up cycle after DTC cleared: Min.: 0, Max.: 255	-	Number of warm-up cycles after DTC cleared
OBD CERT	OBD Requirement:	OBD2 (CARB)	-
#CARB CODES	Number of Emission related DTC	-	-

Intelligent Tester Display	Measurement Item: Range (Display)	Normal Condition*	Diagnostic Note
COMP MON	Comprehensive Component Monitor: NOT AVL / AVAIL	-	-
FUEL MON	Fuel System Monitor: NOT AVL / AVAIL	-	-
MISFIRE MON	Misfire Monitor: NOT AVL / AVAIL	-	-
O2S (A/FS) MON	O2S (A/FS) Monitor: NOT AVL / AVAIL	-	-
O2S (A/FS) MON	O2S (A/FS) Monitor: Complete / Incomplete	-	-
EVAP MON	EVAP Monitor: NOT AVL: AVAIL	-	-
EVAP MON	EVAP Monitor: Complete: Incomplete	-	-
CAT MON	Catalyst Monitor: NOT AVL / AVAIL	-	-
CAT MON	Catalyst Monitor: Complete / Incomplete	-	-
EGR MON	EGR Monitor ENA: NOT AVL / AVAIL	-	-
EGR MON	EGR Monitor CMPL: Complete / Incomplete	-	-
MODEL CODE	Model code information	-	Identifying model code: GSX3#
ENGINE TYPE	Engine type information	-	Identifying engine type: 2GRFE
CYLINDER NUMBER	Cylinder number: Min.: 0, Max.: 255	-	Identifying cylinder number: 6
DESTINATION	Destination	-	Identifying destination: A (America)
MODEL YEAR	Model year: Min.: 1900 MY, Max.: 2155 MY	-	Identifying model year: 200#

*: If no idling conditions are specified, the transmission gear selector lever should be in the N or P position, and the A/C switch and all accessory switches should be OFF.

2. ACTIVE TEST

HINT:

Performing an ACTIVE TEST enables components including the relays, VSV (Vacuum Switching Valve), and actuators, to be operated without removing any parts. The ACTIVE TEST can be performed with an intelligent tester. Performing an ACTIVE TEST as the first step of troubleshooting is one method to shorten diagnostic time.

DATA LIST can be displayed during ACTIVE TESTs.

(a) Connect an intelligent tester to the DLC3.
(b) Start the engine.
(c) Turn the tester ON.
(d) Select the following menu items: DIAGNOSIS / ENHANCED OBD II / ACTIVE TEST.

(e) Perform the ACTIVE TEST by referring to the table below.

Intelligent Tester Display	Test Detail	Control Range	Diagnostic Note
INJ VOL	Change the injection volume	Between -12.5% and 24.8%	• All injectors tested at the same time • Perform test at less than 3,000 rpm • Injection volume can be changed by 1% within control range
A/F CONTROL	Change the injection volume	Lower by 12.5% or increase by 24.8%	• Perform test at less than 3,000 rpm • A/F CONTROL enables checking and graphing of A/F (Air Fuel Ratio) sensor and Heated Oxygen (HO2) sensor voltage outputs • To conduct test, select following menu items: ACTIVE TEST / A/F CONTROL / USER DATA / AFS B1S1 and O2S B1S2, or AFS B2S1 and O2S B2S2, and press YES and ENTER. Then press F4.
INTAKE CTL VSV1	Activate the VSV for Acoustic Control Induction System (ACIS)	ON / OFF	-
EVAP VSV (ALONE)	Activate EVAP VSV control	ON / OFF	-
VVT CTRL B1	Turn on and off OCV (Oil Control Valve) for VVT (Bank 1)	ON: Exhaust side camshaft moves to retard side OFF: Exhaust side camshaft moves to advance side	• Engine stalls or idles roughly when OCV on • Engine running or idling normally when OCV off
VVT CTRL B2	Turn on and off OCV (Oil Control Valve) for VVT (Bank 2)	ON: Exhaust side camshaft moves to retard side OFF: Exhaust side camshaft moves to advance side	• Engine stalls or idles roughly when OCV on • Engine running or idling normally when OCV off
FUEL PUMP/SPD	Activate fuel pump (C/OPN Relay)	ON / OFF	-
ACM INHIBIT	Control the ACM inhibit	ON / OFF	Test is possible while engine idling
TC/TE1	Turn on and off TC and TE1 connection	ON / OFF	• ON: TC and TE1 connected • OFF: TC and TE1 disconnected
FC IDL PROHBT	Prohibit idling fuel cut control	ON / OFF	-
COOLING FAN	Control the electric cooling fan	ON / OFF	-
STARTER	Activate the Starter Relay	ON / OFF	Confirm that the engine is stopped
ACC CUT	Activate the ACC Cut Relay	ON / OFF	Confirm that the engine is stopped
ETCS OPEN SLOW	Control the ETCS (throttle motor) opening slow speed	ON: throttle valve opens slowly	Test is possible when the following conditions are met: • Ignition switch on (IG) • Engine does not start • Accelerator pedal fully depressed (APP: 58 degrees or more)
ETCS CLOSE SLOW	Control the ETCS (throttle motor) closing slow speed	ON: throttle valve closes slowly	Same as above
ETCS OPEN FAST	Control the ETCS (throttle motor) opening fast speed	ON: throttle valve opens fast	Same as above
ETCS CLOSE FAST	Control the ETCS (throttle motor) closing fast speed	ON: throttle valve closes fast	Same as above

Intelligent Tester Display	Test Detail	Control Range	Diagnostic Note
FUEL CUT #1	Cylinder #1 injector fuel cut	ON / OFF	Test is possible while vehicle is stopped with engine idling.
FUEL CUT #2	Cylinder #2 injector fuel cut	ON / OFF	Same as above
FUEL CUT #3	Cylinder #3 injector fuel cut	ON / OFF	Same as above
FUEL CUT #4	Cylinder #4 injector fuel cut	ON / OFF	Same as above
FUEL CUT #5	Cylinder #5 injector fuel cut	ON / OFF	Same as above
FUEL CUT #6	Cylinder #6 injector fuel cut	ON / OFF	Same as above
VVT B1	Control the VVT (bank 1 Intake Side)	Between -128 and 127% This valve added to present OCV control duty 100%: Maximum advance -100% : Maximum retard	Engine stalls or idles roughly when VVT actuator operated by 100%. Test is possible while idling.
VVT B2	Control the VVT (bank 2 Intake Side)	Between -128% and 127%	Same as above
VVT EX B1	Control the VVT (bank 1 Exhaust Side)	This valve added to present OCV control duty 100%: Maximum retard -100%: Maximum advance	Same as above
VVT EX B2	Control the VVT (bank 2 Exhaust Side)	Same as above	Same as above
VACUUM PUMP	Activate the Vacuum Pump built into pump module	ON / OFF	-
VENT VALVE	Activate the VSV for Vent Valve built into pump module	ON / OFF	-
AICV VSV	Activate the VSV for Air Intake Control System (AICS)	ON / OFF	-

ES

3. SYSTEM CHECK

HINT:

Performing a SYSTEM CHECK enables the system, which consists of the multiple actuators, to be operated without removing any parts. In addition, it can show whether or not any DTCs are set, and can detect potential malfunctions in the system. The SYSTEM CHECK can be performed with an intelligent tester.

(a) Connect an intelligent tester to the DLC3.
(b) Start the engine.
(c) Turn the tester ON.
(d) Select the following menu items: DIAGNOSIS / ENHANCED OBD II / SYSTEM CHECK.
(e) Perform the SYSTEM CHECK by referring to the table below.

Intelligent Tester Displays	Test Details	Recommended Fuel Temperatures	Diagnostic Notes
EVAP SYS CHECK (AUTO OPERATION)	Perform 5 steps in order to operate EVAP key-off monitor automatically	35°C (95°F) or less	• If no DTCs in PENDING CODE after performing this test, system functioning normally • Refer to EVAP System (See page ES-365)
EVAP SYS CHECK (MANUAL OPERATION)	Perform 5 steps in order to operate EVAP key-off monitor manually	35°C (95°F) or less	• Used to detect malfunctioning parts • Refer to EVAP System (See page ES-365)

DIAGNOSTIC TROUBLE CODE CHART

HINT:
The parameters listed in the chart may not conform exactly to those read during the DTC check due to the type of instrument or other factors.
If a trouble code is displayed during the DTC check in the check mode, check the circuit for the code listed in the table below. For details of each code, refer to the "See page" in the DTC chart.

SFI SYSTEM

DTC No.	Detection Item	Suspected Trouble Area	MIL	Memory	See page
P0010	Camshaft Position "A" Actuator Circuit (Bank 1)	1. Open or short in Oil Control Valve (OCV) circuit for intake camshaft 2. OCV for intake camshaft (bank 1) 3. ECM	Comes on	DTC stored	ES-76
P0011	Camshaft Position "A" - Timing Over-Advanced or System Performance (Bank 1)	1. Valve timing 2. OCV for intake camshaft 3. OCV filter 4. Intake camshaft timing gear assembly 5. ECM	Comes on	DTC stored	ES-81
P0012	Camshaft Position "A" - Timing Over-Retarded (Bank 1)	Same as DTC P0011	Comes on	DTC stored	ES-81
P0013	Camshaft Position "B" Actuator Circuit / Open (Bank 1)	1. Open or short in Oil Control Valve (OCV) circuit for exhaust camshaft 2. OCV for exhaust camshaft (bank 1) 3. ECM	Comes on	DTC stored	ES-87
P0014	Camshaft Position "B" - Timing Over-Advanced or System Performance (Bank 1)	1. Valve timing 2. OCV for exhaust camshaft 3. OCV filter 4. Exhaust camshaft timing gear assembly 5. ECM	Comes on	DTC stored	ES-92
P0015	Camshaft Position "B" - Timing Over-Retarded (Bank 1)	Same as DTC P0014	Comes on	DTC stored	ES-92
P0016	Crankshaft Position - Camshaft Position Correlation (Bank 1 Sensor A)	1. Mechanical system (Timing chain has jumped teeth or chain is stretched) 2. ECM	Comes on	DTC stored	ES-98
P0017	Crankshaft Position - Camshaft Position Correlation (Bank 1 Sensor B)	Same as DTC P0016	Comes on	DTC stored	ES-98
P0018	Crankshaft Position - Camshaft Position Correlation (Bank 2 Sensor A)	Same as DTC P0016	Comes on	DTC stored	ES-98
P0019	Crankshaft Position - Camshaft Position Correlation (Bank 2 Sensor B)	Same as DTC P0016	Comes on	DTC stored	ES-98

DTC No.	Detection Item	Suspected Trouble Area	MIL	Memory	See page
P0020	Camshaft Position "A" Actuator Circuit (Bank 2)	1. Open or short in Oil Control Valve (OCV) circuit for intake camshaft 2. OCV for intake camshaft (bank 2) 3. ECM	Comes on	DTC stored	ES-76
P0021	Camshaft Position "A" - Timing Over-Advanced or System Performance (Bank 2)	Same as DTC P0011	Comes on	DTC stored	ES-81
P0022	Camshaft Position "A" - Timing Over-Retarded (Bank 2)	Same as DTC P0011	Comes on	DTC stored	ES-81
P0023	Camshaft Position "B" Actuator Circuit / Open (Bank 2)	1. Open or short in Oil Control Valve circuit (OCV) for exhaust camshaft 2. OCV for exhaust camshaft (bank 2) 3. ECM	Comes on	DTC stored	ES-87
P0024	Camshaft Position "B" - Timing Over-Advanced or System Performance (Bank 2)	Same as DTC P0014	Comes on	DTC stored	ES-92
P0025	Camshaft Position "B" - Timing Over-Retarded (Bank 2)	Same as DTC P0014	Comes on	DTC stored	ES-92
P0031 *1	Oxygen (A/F) Sensor Heater Control Circuit Low (Bank 1 Sensor 1)	1. Open in Air-Fuel Ratio (A/F) sensor heater circuit 2. A/F sensor heater (bank 1 sensor 1) 3. A/F sensor heater relay 4. ECM	Comes on	DTC stored	ES-101
P0032 *1	Oxygen (A/F) Sensor Heater Control Circuit High (Bank 1 Sensor 1)	1. Short in A/F sensor heater circuit 2. A/F sensor heater (bank 1 sensor 1) 3. A/F sensor heater relay 4. ECM	Comes on	DTC stored	ES-101
P0037	Oxygen Sensor Heater Control Circuit Low (Bank 1 Sensor 2)	1. Open in Heated Oxygen (HO2) sensor heater circuit 2. HO2 sensor heater (bank 1 sensor 2) 3. EFI relay 4. ECM	Comes on	DTC stored	ES-107
P0038	Oxygen Sensor Heater Control Circuit High (Bank 1 Sensor 2)	1. Short in HO2 sensor heater circuit 2. HO2 sensor heater (bank 1 sensor 2) 3. EFI relay 4. ECM	Comes on	DTC stored	ES-107

ES

DTC No.	Detection Item	Suspected Trouble Area	MIL	Memory	See page
P0051 *1	Oxygen (A/F) Sensor Heater Control Circuit Low (Bank 2 Sensor 1)	1. Open in A/F sensor heater circuit 2. A/F sensor heater (bank 2 sensor 1) 3. A/F sensor heater relay 4. ECM	Comes on	DTC stored	ES-101
P0052 *1	Oxygen (A/F) Sensor Heater Control Circuit High (Bank 2 Sensor 1)	1. Short in A/F sensor heater circuit 2. A/F sensor heater (bank 2 sensor 1) 3. A/F sensor heater relay 4. ECM	Comes on	DTC stored	ES-101
P0057	Oxygen Sensor Heater Control Circuit Low (Bank 2 Sensor 2)	1. Open in HO2 sensor heater circuit 2. HO2 sensor heater (bank 2 sensor 2) 3. EFI relay 4. ECM	Comes on	DTC stored	ES-107
P0058	Oxygen Sensor Heater Control Circuit High (Bank 2 Sensor 2)	1. Short in HO2 sensor heater circuit 2. HO2 sensor heater (bank 2 sensor 2) 3. EFI relay 4. ECM	Comes on	DTC stored	ES-107
P0100	Mass or Volume Air Flow Circuit	1. Open or short in Mass Air Flow (MAF) meter circuit 2. MAF meter 3. ECM	Comes on	DTC stored	ES-113
P0101	Mass or Volume Air Flow Circuit Range / Performance Problem	MAF meter	Comes on	DTC stored	ES-120
P0102	Mass or Volume Air Flow Circuit Low Input	1. Open in MAF meter circuit 2. Short in ground circuit 3. MAF meter 4. ECM	Comes on	DTC stored	ES-113
P0103	Mass or Volume Air Flow Circuit High Input	1. Short in MAF meter circuit (+B circuit) 2. MAF meter 3. ECM	Comes on	DTC stored	ES-113
P0110	Intake Air Temperature Circuit	1. Open or short in Intake Air Temperature (IAT) sensor circuit 2. IAT sensor (built into Mass Air Flow [MAF] meter) 3. ECM	Comes on	DTC stored	ES-122
P0112	Intake Air Temperature Circuit Low Input	1. Short in IAT sensor circuit 2. IAT sensor (built into MAF meter) 3. ECM	Comes on	DTC stored	ES-122
P0113	Intake Air Temperature Circuit High Input	1. Open in IAT sensor circuit 2. IAT sensor (built into MAF meter) 3. ECM	Comes on	DTC stored	ES-122

DTC No.	Detection Item	Suspected Trouble Area	MIL	Memory	See page
P0115	Engine Coolant Temperature Circuit	1. Open or short in Engine Coolant Temperature (ECT) sensor circuit 2. ECT sensor 3. ECM	Comes on	DTC stored	ES-128
P0116	Engine Coolant Temperature Circuit Range / Performance Problem	ECT sensor	Comes on	DTC stored	ES-133
P0117	Engine Coolant Temperature Circuit Low Input	1. Short in ECT sensor circuit 2. ECT sensor 3. ECM	Comes on	DTC stored	ES-128
P0118	Engine Coolant Temperature Circuit High Input	1. Open in ECT sensor circuit 2. ECT sensor 3. ECM	Comes on	DTC stored	ES-128
P0120	Throttle / Pedal Position Sensor / Switch "A" Circuit	1. Throttle Position (TP) sensor (built into throttle body) 2. ECM	Comes on	DTC stored	ES-136
P0121	Throttle / Pedal Position Sensor / Switch "A" Circuit Range / Performance Problem	TP sensor (built into throttle body)	Comes on	DTC stored	ES-144
P0122	Throttle / Pedal Position Sensor / Switch "A" Circuit Low Input	1. TP sensor (built into throttle body) 2. Short in VTA1 circuit 3. Open in VC circuit 4. ECM	Comes on	DTC stored	ES-136
P0123	Throttle / Pedal Position Sensor / Switch "A" Circuit High Input	1. TP sensor (built into throttle body) 2. Open in VTA1 circuit 3. Open in E2 circuit 4. Short between VC and VTA1 circuits 5. ECM	Comes on	DTC stored	ES-136
P0125	Insufficient Coolant Temperature for Closed Loop Fuel Control	1. Cooling system 2. ECT sensor 3. Thermostat	Comes on	DTC stored	ES-146
P0128	Coolant Thermostat (Coolant Temperature Below Thermostat Regulating Temperature)	1. Thermostat 2. Cooling system 3. ECT sensor 4. ECM	Comes on	DTC stored	ES-149
P0136	Oxygen Sensor Circuit Malfunction (Bank 1 Sensor 2)	1. Open or short in HO2 sensor (bank 1 sensor 2) circuit 2. HO2 sensor (bank 1 sensor 2) 3. HO2 sensor heater (bank 1 sensor 2) 4. A/F sensor (bank 1 sensor 1) 5. EFI relay 6. Gas leakage from exhaust system	Comes on	DTC stored	ES-152

DTC No.	Detection Item	Suspected Trouble Area	MIL	Memory	See page
P0137	Oxygen Sensor Circuit Low Voltage (Bank 1 Sensor 2)	1. Open in HO2 sensor (bank 1 sensor 2) circuit 2. HO2 sensor (bank 1 sensor 2) 3. HO2 sensor heater (bank 1 sensor 2) 4. EFI relay 5. Gas leakage from exhaust system	Comes on	DTC stored	ES-152
P0138	Oxygen Sensor Circuit High Voltage (Bank 1 Sensor 2)	1. Short in HO2 sensor (bank 1 sensor 2) circuit 2. HO2 sensor (bank 1 sensor 2) 3. ECM internal circuit malfunction	Comes on	DTC stored	ES-152
P0156	Oxygen Sensor Circuit Malfunction (Bank 2 Sensor 2)	1. Open or short in HO2 sensor (bank 2 sensor 2) circuit 2. HO2 sensor (bank 2 sensor 2) 3. HO2 sensor heater (bank 2 sensor 2) 4. A/F sensor (bank 2 sensor 1) 5. EFI relay 6. Gas leakage from exhaust system	Comes on	DTC stored	ES-152
P0157	Oxygen Sensor Circuit Low Voltage (Bank 2 Sensor 2)	1. Open in HO2 sensor (bank 2 sensor 2) circuit 2. HO2 sensor (bank 2 sensor 2) 3. HO2 sensor heater (bank 2 sensor 2) 4. EFI relay 5. Gas leakage from exhaust system	Comes on	DTC stored	ES-152
P0158	Oxygen Sensor Circuit High Voltage (Bank 2 Sensor 2)	1. Short in HO2 sensor (bank 2 sensor 2) circuit 2. HO2 sensor (bank 2 sensor 2) 3. ECM internal circuit malfunction	Comes on	DTC stored	ES-152

DTC No.	Detection Item	Suspected Trouble Area	MIL	Memory	See page
P0171	System Too Lean (Bank 1)	1. Air induction system 2. Injector blockage 3. MAF meter 4. ECT sensor 5. Fuel pressure 6. Gas leakage from exhaust system 7. Open or short in A/F sensor (bank 1 sensor 1) circuit 8. A/F sensor (bank 1 sensor 1) 9. A/F sensor heater (bank 1 sensor 1) 10. A/F sensor heater relay 11. A/F sensor heater and A/F sensor heater relay circuits 12. PCV hose connections 13. PCV valve and hose 14. ECM	Comes on	DTC stored	ES-171
P0172	System Too Rich (Bank 1)	1. Injector leakage or blockage 2. MAF meter 3. ECT sensor 4. Ignition system 5. Fuel pressure 6. Gas leakage from exhaust system 7. Open or short in A/F sensor (bank 1 sensor 1) circuit 8. A/F sensor (bank 1 sensor 1) 9. A/F sensor heater (bank 1 sensor 1) 10. A/F sensor heater relay 11. A/F sensor heater and A/F sensor heater relay circuits 12. ECM	Comes on	DTC stored	ES-171

DTC No.	Detection Item	Suspected Trouble Area	MIL	Memory	See page
P0174	System Too Lean (Bank 2)	1. Air induction system 2. Injector blockage 3. MAF meter 4. ECT sensor 5. Fuel pressure 6. Gas leakage from exhaust system 7. Open or short in A/F sensor (bank 2 sensor 1) circuit 8. A/F sensor (bank 2 sensor 1) 9. A/F sensor heater (bank 2 sensor 1) 10. A/F sensor heater relay 11. A/F sensor heater and A/F sensor heater relay circuits 12. PCV hose connections 13. PCV valve and hose 14. ECM	Comes on	DTC stored	ES-171
P0175	System Too Rich (Bank 2)	1. Injector leakage or blockage 2. MAF meter 3. ECT sensor 4. Ignition system 5. Fuel pressure 6. Gas leakage from exhaust system 7. Open or short in A/F sensor (bank 2 sensor 1) circuit 8. A/F sensor (bank 2 sensor 1) 9. A/F sensor heater (bank 2 sensor 1) 10. A/F sensor heater relay 11. A/F sensor heater and A/F sensor heater relay circuits 12. ECM	Comes on	DTC stored	ES-171
P0220	Throttle / Pedal Position Sensor / Switch "B" Circuit	1. TP sensor (built into throttle body) 2. ECM	Comes on	DTC stored	ES-136
P0222	Throttle / Pedal Position Sensor / Switch "B" Circuit Low Input	1. TP sensor (built into throttle body) 2. Short in VTA2 circuit 3. Open in VC circuit 4. ECM	Comes on	DTC stored	ES-136
P0223	Throttle / Pedal Position Sensor / Switch "B" Circuit High Input	1. TP sensor (built into throttle body) 2. Open in VTA2 circuit 3. Open in E2 circuit 4. Short between VC and VTA2 circuits 5. ECM	Comes on	DTC stored	ES-136

DTC No.	Detection Item	Suspected Trouble Area	MIL	Memory	See page
P0300	Random / Multiple Cylinder Misfire Detected	1. Open or short in engine wire harness 2. Connector connections 3. Vacuum hose connection 4. Ignition system 5. Injector 6. Fuel pressure 7. Mass Air Flow (MAF) meter 8. Engine Coolant Temperature (ECT) sensor 9. Cylinder compression 10. Valve clearance 11. Valve timing 12. PCV hose connection 13. PCV hose 14. ECM 15. Air induction system	Comes on or flashes	DTC stored	ES-183
P0301	Cylinder 1 Misfire Detected	Same as DTC P0300	Comes on or flashes	DTC stored	ES-183
P0302	Cylinder 2 Misfire Detected	Same as DTC P0300	Comes on or flashes	DTC stored	ES-183
P0303	Cylinder 3 Misfire Detected	Same as DTC P0300	Comes on or flashes	DTC stored	ES-183
P0304	Cylinder 4 Misfire Detected	Same as DTC P0300	Comes on or flashes	DTC stored	ES-183
P0305	Cylinder 5 Misfire Detected	Same as DTC P0300	Comes on or flashes	DTC stored	ES-183
P0306	Cylinder 6 Misfire Detected	Same as DTC P0300	Comes on or flashes	DTC stored	ES-183
P0327	Knock Sensor 1 Circuit Low Input (Bank 1 or Single Sensor)	1. Short in knock sensor 1 circuit 2. Knock sensor 1 3. ECM	Comes on	DTC stored	ES-197
P0328	Knock Sensor 1 Circuit High Input (Bank 1 or Single Sensor)	1. Open in knock sensor 1 circuit 2. Knock sensor 1 3. ECM	Comes on	DTC stored	ES-197
P0332	Knock Sensor 2 Circuit Low Input (Bank 2)	1. Short in knock sensor 2 circuit 2. Knock sensor 2 3. ECM	Comes on	DTC stored	ES-197
P0333	Knock Sensor 2 Circuit High Input (Bank 2)	1. Open in knock sensor 2 circuit 2. Knock sensor 2 3. ECM	Comes on	DTC stored	ES-197
P0335	Crankshaft Position Sensor "A" Circuit	1. Open or short in Crankshaft Position Sensor (CKP) circuit 2. CKP sensor 3. Sensor plate (CKP sensor plate) 4. ECM	Comes on	DTC stored	ES-203
P0339	Crankshaft Position Sensor "A" Circuit Intermittent	Same as DTC P0335	Does not come on	DTC stored	ES-203

DTC No.	Detection Item	Suspected Trouble Area	MIL	Memory	See page
P0340	Camshaft Position Sensor "A" Circuit (Bank 1 or Single Sensor)	1. Open or short in VVT sensor circuit for intake camshaft 2. VVT sensor for intake camshaft 3. Camshaft timing pulley 4. Jumped teeth of timing chain 5. ECM	Comes on	DTC stored	ES-209
P0342	Camshaft Position Sensor "A" Circuit Low Input (Bank 1 or Single Sensor)	Same as DTC P0340	Comes on	DTC stored	ES-209
P0343	Camshaft Position Sensor "A" Circuit High Input (Bank 1 or Single Sensor)	Same as DTC P0340	Comes on	DTC stored	ES-209
P0345	Camshaft Position Sensor "A" Circuit (Bank 2)	Same as DTC P0340	Comes on	DTC stored	ES-209
P0347	Camshaft Position Sensor "A" Circuit Low Input (Bank 2)	Same as DTC P0340	Comes on	DTC stored	ES-209
P0348	Camshaft Position Sensor "A" Circuit High Input (Bank 2)	Same as DTC P0340	Comes on	DTC stored	ES-209
P0351 *2	Ignition Coil "A" Primary / Secondary Circuit	1. Ignition system 2. Open or short in IGF1 or IGT circuit (1 to 6) between ignition coil with igniter and ECM 3. No. 1 to No. 6 ignition coils with igniters 4. ECM	Comes on	DTC stored	ES-215
P0352 *2	Ignition Coil "B" Primary / Secondary Circuit	Same as DTC P0351	Comes on	DTC stored	ES-215
P0353 *2	Ignition Coil "C" Primary / Secondary Circuit	Same as DTC P0351	Comes on	DTC stored	ES-215
P0354 *2	Ignition Coil "D" Primary / Secondary Circuit	Same as DTC P0351	Comes on	DTC stored	ES-215
P0355 *2	Ignition Coil "E" Primary / Secondary Circuit	Same as DTC P0351	Comes on	DTC stored	ES-215
P0356 *2	Ignition Coil "F" Primary / Secondary Circuit	Same as DTC P0351	Comes on	DTC stored	ES-215
P0365	Camshaft Position Sensor "B" Circuit (Bank 1)	1. Open or short in VVT sensor for exhaust camshaft circuit 2. VVT sensor for exhaust camshaft 3. Exhaust camshaft 4. ECM	Comes on	DTC stored	ES-225

DTC No.	Detection Item	Suspected Trouble Area	MIL	Memory	See page
P0367	Camshaft Position Sensor "B" Circuit Low Input (Bank 1)	1. Open or short in VVT sensor for exhaust camshaft circuit 2. VVT sensor for exhaust camshaft 3. Exhaust camshaft 4. Jumped teeth of timing chain 5. ECM	Comes on	DTC stored	ES-225
P0368	Camshaft Position Sensor "B" Circuit High Input (Bank 1)	1. Open or short in VVT sensor for exhaust camshaft circuit 2. VVT sensor for exhaust camshaft 3. Exhaust camshaft 4. Jumped teeth of timing chain 5. ECM	Comes on	DTC stored	ES-225
P0390	Camshaft Position Sensor "B" Circuit (Bank 2)	1. Open or short in VVT sensor for exhaust camshaft circuit 2. VVT sensor for exhaust camshaft 3. Exhaust camshaft 4. ECM	Comes on	DTC stored	ES-225
P0392	Camshaft Position Sensor "B" Circuit Low Input (Bank 2)	1. Open or short in VVT sensor for exhaust camshaft circuit 2. VVT sensor for exhaust camshaft 3. Exhaust camshaft 4. Jumped teeth of timing belt 5. ECM	Comes on	DTC stored	ES-225
P0393	Camshaft Position Sensor "B" Circuit High Input (Bank 2)	1. Open or short in VVT sensor for exhaust camshaft circuit 2. VVT sensor for exhaust camshaft 3. Exhaust camshaft 4. Jumped teeth of timing belt 5. ECM	Comes on	DTC stored	ES-225
P0420	Catalyst System Efficiency Below Threshold (Bank 1)	1. Gas leakage from exhaust system 2. A/F sensor (bank 1 sensor 1) 3. HO2 sensor (bank 1 sensor 2) 4. Exhaust manifold (Three-Way Catalytic Converter [TWC])	Comes on	DTC stored	ES-229
P0430	Catalyst System Efficiency Below Threshold (Bank 2)	1. Gas leakage from exhaust system 2. A/F sensor (bank 2 sensor 1) 3. HO2 sensor (bank 2 sensor 2) 4. Exhaust manifold (Three-Way Catalytic Converter [TWC])	Comes on	DTC stored	ES-229

DTC No.	Detection Item	Suspected Trouble Area	MIL	Memory	See page
P043E	Evaporative Emission System Reference Orifice Clog Up	1. Pump module 2. Connector / wire harness (between pump module and ECM) 3. Leakage from EVAP system 4. ECM	Comes on	DTC stored	ES-236
P043F	Evaporative Emission System Reference Orifice High Flow	1. Pump module 2. Connector / wire harness (between pump module and ECM) 3. Leakage from EVAP system 4. ECM	Comes on	DTC stored	ES-236
P0441	Evaporative Emission Control System Incorrect Purge Flow	1. Purge VSV 2. Purge VSV circuit (between purge VSV and ECM) 3. Leakage from EVAP line (between purge VSV and intake manifold) 4. EVAP line clogged (between purge VSV and canister) 5. ECM	Comes on	DTC stored	ES-242
P0450	Evaporative Emission Control System Pressure Sensor / Switch	1. Pump module (including pressure sensor) 2. ECM	Comes on	DTC stored	ES-249
P0451	Evaporative Emission Control System Pressure Sensor Range / Performance	1. Pump module (including pressure sensor) 2. Connector / wire harness (between pump module and ECM) 3. ECM	Comes on	DTC stored	ES-249
P0452	Evaporative Emission Control System Pressure Sensor / Switch Low Input	1. Pump module (including pressure sensor) 2. Connector / wire harness (between pump module and ECM) 3. ECM	Comes on	DTC stored	ES-249
P0453	Evaporative Emission Control System Pressure Sensor / Switch High Input	1. Pump module (include pressure sensor) 2. Connector / wire harness (between pump module and ECM) 3. ECM	Comes on	DTC stored	ES-249

DTC No.	Detection Item	Suspected Trouble Area	MIL	Memory	See page
P0455	Evaporative Emission Control System Leak Detected (Gross Leak)	1. Fuel tank cap (loose) 2. Leakage from EVAP line (between canister and fuel tank) 3. Leakage from EVAP line (between purge VSV and canister) 4. Leakage from pump module 5. Leakage from fuel tank 6. Leakage from canister	Comes on	DTC stored	ES-257
P0456	Evaporative Emission Control System Leak Detected (Very Small Leak)	Same as DTC P0455	Comes on	DTC stored	ES-257
P0500	Vehicle Speed Sensor "A"	1. Open or short in speed sensor circuit 2. Speed sensor 3. Combination meter 4. ECM 5. Skid control ECU	Comes on	DTC stored	ES-262
P0504	Brake Switch "A" / "B" Correlation	1. Short in stop light switch signal circuit 2. STOP fuse 3. Stop light switch 4. ECM	Does not come on	DTC stored	ES-265
P0505	Idle Control System Malfunction	1. ETCS (Electronic Throttle Control System) 2. Air induction system 3. PCV hose connection 4. ECM	Comes on	DTC stored	ES-271
P0560	System Voltage	1. Open in back up power source circuit 2. EFI No. 1 fuse 3. ECM	Comes on	DTC stored	ES-275
P0604	Internal Control Module Random Access Memory (RAM) Error	ECM	Comes on	DTC stored	ES-279
P0606	ECM / PCM Processor	ECM	Comes on	DTC stored	ES-279
P0607	Control Module Performance	ECM	Comes on	DTC stored	ES-279
P0617	Starter Relay Circuit High	1. Park / Neutral Position (PNP) switch 2. Starter relay circuit 3. Ignition switch 4. ECM	Comes on	DTC stored	ES-281
P0630	VIN not Programmed or Mismatch - ECM / PCM	ECM	Comes on	DTC stored	ES-285
P0657	Actuator Supply Voltage Circuit / Open	ECM	Comes on	DTC stored	ES-279

DTC No.	Detection Item	Suspected Trouble Area	MIL	Memory	See page
P2102	Throttle Actuator Control Motor Circuit Low	1. Open in throttle actuator circuit 2. Throttle actuator 3. ECM	Comes on	DTC stored	ES-287
P2103	Throttle Actuator Control Motor Circuit High	1. Short in throttle actuator circuit 2. Throttle actuator 3. Throttle valve 4. Throttle body 5. ECM	Comes on	DTC stored	ES-287
P2111	Throttle Actuator Control System - Stuck Open	1. Throttle actuator 2. Throttle body 3. Throttle valve	Comes on	DTC stored	ES-291
P2112	Throttle Actuator Control System - Stuck Closed	Same as DTC P2111	Comes on	DTC stored	ES-291
P2118	Throttle Actuator Control Motor Current Range / Performance	1. Open in ETCS power source circuit 2. ETCS fuse 3. ECM	Comes on	DTC stored	ES-294
P2119	Throttle Actuator Control Throttle Body Range / Performance	1. ETCS 2. ECM	Comes on	DTC stored	ES-298
P2120	Throttle / Pedal Position Sensor / Switch "D" Circuit	1. Accelerator Pedal Position (APP) sensor 2. ECM	Comes on	DTC stored	ES-301
P2121	Throttle / Pedal Position Sensor / Switch "D" Circuit Range / Performance	1. Accelerator Pedal Position (APP) sensor 2. ECM	Comes on	DTC stored	ES-309
P2122	Throttle / Pedal Position Sensor / Switch "D" Circuit Low Input	1. Accelerator Pedal Position (APP) sensor 2. Open in VCP1 circuit 3. Open or ground short in VPA circuit 4. ECM	Comes on	DTC stored	ES-301
P2123	Throttle / Pedal Position Sensor / Switch "D" Circuit High Input	1. Accelerator Pedal Position (APP) sensor 2. Open in EPA circuit 3. ECM	Comes on	DTC stored	ES-301
P2125	Throttle / Pedal Position Sensor / Switch "E" Circuit	1. Accelerator Pedal Position (APP) sensor 2. ECM	Comes on	DTC stored	ES-301
P2127	Throttle / Pedal Position Sensor / Switch "E" Circuit Low Input	1. Accelerator Pedal Position (APP) sensor 2. Open in VCP2 circuit 3. Open or ground short in VPA2 circuit 4. ECM	Comes on	DTC stored	ES-301
P2128	Throttle / Pedal Position Sensor / Switch "E" Circuit High Input	1. Accelerator Pedal Position (APP) sensor 2. Open in EPA2 circuit 3. ECM	Comes on	DTC stored	ES-301

DTC No.	Detection Item	Suspected Trouble Area	MIL	Memory	See page
P2135	Throttle / Pedal Position Sensor / Switch "A" / "B" Voltage Correlation	1. Short between VTA1 and VTA2 circuits 2. TP sensor (built into throttle body) 3. ECM	Comes on	DTC stored	ES-136
P2138	Throttle / Pedal Position Sensor / Switch "D" / "E" Voltage Correlation	1. Short between VPA and VPA2 circuits 2. APP sensor 3. ECM	Comes on	DTC stored	ES-301
P2195 *1	Oxygen (A/F) Sensor Signal Stuck Lean (Bank 1 Sensor 1)	1. Open or short in A/F sensor (bank 1 sensor 1) circuit 2. A/F sensor (bank 1 sensor 1) 3. A/F sensor heater (bank 1 sensor 1) 4. A/F sensor heater relay 5. A/F sensor heater and relay circuits 6. Air induction system 7. Fuel pressure 8. Injector 9. ECM	Comes on	DTC stored	ES-313
P2196 *1	Oxygen (A/F) Sensor Signal Stuck Rich (Bank 1 Sensor 1)	Same as DTC P2195	Comes on	DTC stored	ES-313
P2197 *1	Oxygen (A/F) Sensor Signal Stuck Lean (Bank 2 Sensor 1)	1. Open or short in A/F sensor (bank 2 sensor 1) circuit 2. A/F sensor (bank 2 sensor 1) 3. A/F sensor heater (bank 2 sensor 1) 4. A/F sensor heater relay 5. A/F sensor heater and relay circuits 6. Air induction system 7. Fuel pressure 8. Injector 9. ECM	Comes on	DTC stored	ES-313
P2198 *1	Oxygen (A/F) Sensor Signal Stuck Rich (Bank 2 Sensor 1)	Same as DTC P2197	Comes on	DTC stored	ES-313
P2238 *1	Oxygen (A/F) Sensor Pumping Current Circuit Low (Bank 1 Sensor 1)	1. Open or short in A/F sensor (bank 1 sensor 1) circuit 2. A/F sensor (bank 1 sensor 1) 3. A/F sensor heater (bank 1 sensor 1) 4. A/F sensor heater relay 5. A/F sensor heater and relay circuits 6. ECM	Comes on	DTC stored	ES-329
P2239 *1	Oxygen (A/F) Sensor Pumping Current Circuit High (Bank 1 Sensor 1)	Same as DTC P2238	Comes on	DTC stored	ES-329

DTC No.	Detection Item	Suspected Trouble Area	MIL	Memory	See page
P2241 *1	Oxygen (A/F) Sensor Pumping Current Circuit Low (Bank 2 Sensor 1)	1. Open or short in A/F sensor (bank 2 sensor 1) circuit 2. A/F sensor (bank 2 sensor 1) 3. A/F sensor heater (bank 2 sensor 1) 4. A/F sensor heater relay 5. A/F sensor heater and relay circuits 6. ECM	Comes on	DTC stored	ES-329
P2242 *1	Oxygen (A/F) Sensor Pumping Current Circuit High (Bank 2 Sensor 1)	Same as DTC P2241	Comes on	DTC stored	ES-329
P2252 *1	Oxygen (A/F) Sensor Reference Ground Circuit Low (Bank 1 Sensor 1)	Same as DTC P2238	Comes on	DTC stored	ES-329
P2253 *1	Oxygen (A/F) Sensor Reference Ground Circuit High (Bank 1 Sensor 1)	Same as DTC P2238	Comes on	DTC stored	ES-329
P2255 *1	Oxygen (A/F) Sensor Reference Ground Circuit Low (Bank 2 Sensor 1)	Same as DTC P2241	Comes on	DTC stored	ES-329
P2256 *1	Oxygen (A/F) Sensor Reference Ground Circuit High (Bank 2 Sensor 1)	Same as DTC P2241	Comes on	DTC stored	ES-329
P2401	Evaporative Emission System Leak Detection Pump Control Circuit Low	1. Pump module 2. Connector / wire harness (between pump module and ECM) 3. ECM 4. Leakage from EVAP system	Comes on	DTC stored	ES-336
P2402	Evaporative Emission System Leak Detection Pump Control Circuit High	1. Pump module 2. Connector / wire harness (between pump module and ECM) 3. ECM	Comes on	DTC stored	ES-336
P2419	Evaporative Emission System Switching Valve Control Circuit Low	1. Pump module 2. Connector / wire harness (between pump module and ECM) 3. ECM	Comes on	DTC stored	ES-342
P2420	Evaporative Emission System Switching Valve Control Circuit High	1. Pump module 2. Connector / wire harness (between pump module and ECM) 3. ECM 4. Leakage from EVAP system	Comes on	DTC stored	ES-342
P2610	ECM / PCM Internal Engine Off Timer Performance	ECM	Comes on	DTC stored	ES-348

DTC No.	Detection Item	Suspected Trouble Area	MIL	Memory	See page
P2A00	A/F Sensor Circuit Slow Response (Bank 1 Sensor 1)	1. Open or short in A/F sensor (bank 1 sensor 1) circuit 2. A/F sensor (bank1 sensor 1) 3. ECM	Comes on	DTC stored	ES-350
P2A03	A/F Sensor Circuit Slow Response (Bank 2 Sensor 1)	1. Open or short in A/F sensor (bank 2 sensor 1) circuit 2. A/F sensor (bank 2 sensor 1) 3. ECM	Comes on	DTC stored	ES-350

*1: This DTC is related to the A/F sensor, although the caption in the detection item column refers to it as the heated oxygen sensor.
*2: This DTC indicates a malfunction related to the primary circuit.

DTC	P0010	Camshaft Position "A" Actuator Circuit (Bank 1)

DTC	P0020	Camshaft Position "A" Actuator Circuit (Bank 2)

HINT:
These DTCs relate to the Oil Control Valve (OCV) for intake camshaft.

DESCRIPTION

ES

The Variable Valve Timing (VVT) system includes the ECM, OCV and VVT controller. The ECM sends a target duty-cycle control signal to the OCV. This control signal regulates the oil pressure applied to the VVT controller. Camshaft timing control is performed according to engine operating conditions such as intake air volume, throttle valve position and engine coolant temperature.
The ECM controls the OCV, based on the signals transmitted by several sensors. The VVT controller regulates the intake camshaft angle using oil pressure through the OCV. As a result, the relative positions of the camshaft and crankshaft are optimized, the engine torque and fuel economy improve, and the exhaust emissions decrease under overall driving conditions. The ECM detects the actual intake valve timing using signals from the camshaft and crankshaft position sensors, and performs feedback control. This is how the target intake valve timing is verified by the ECM.

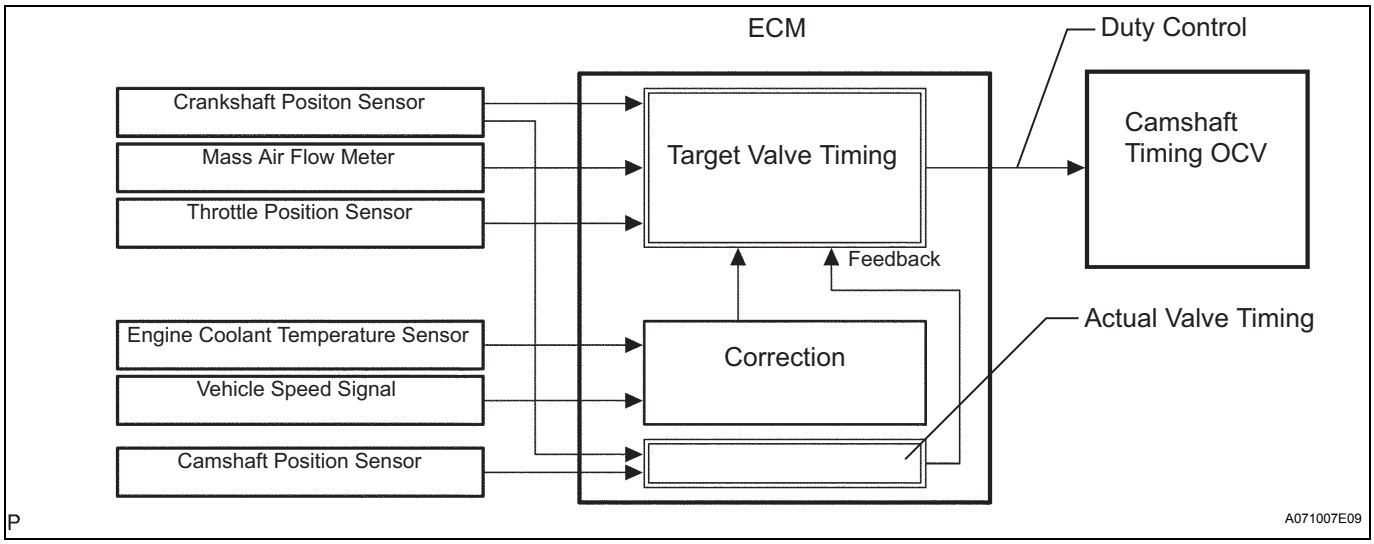

DTC No.	DTC Detection Conditions	Trouble Areas
P0010	Open or short in OCV circuit (1 trip detection logic)	• Open or short in Oil Control Valve (OCV) circuit for intake camshaft • OCV for intake camshaft (bank 1) • ECM
P0020	Open or short in OCV circuit (1 trip detection logic)	• Open or short in Oil Control Valve (OCV) circuit for intake camshaft • OCV for intake camshaft (bank 2) • ECM

MONITOR DESCRIPTION

The ECM optimizes the valve timing using the VVT system to control the intake camshaft. The VVT system includes the ECM, the OCV and the VVT controller. The ECM sends a target duty-cycle control signal to the OCV. This control signal regulates the oil pressure applied to the VVT controller. The VVT controller can advance or retard the intake camshaft.

After the ECM sends the target duty-cycle signal to the OCV, the ECM monitors the OCV current to establish an actual duty-cycle. The ECM determines the existence of a malfunction and sets a DTC when the actual duty-cycle ratio varies from the target duty-cycle ratio.

MONITOR STRATEGY

Related DTCs	P0010: VVT OCV (Bank 1) range check P0020: VVT OCV (Bank 2) range check
Required sensors / components (Main)	VVT OCV
Required sensors / components (Related)	-
Frequency of operation	Continuous
Duration	1 second
MIL operation	Immediate
Sequence operation	None

ES

TYPICAL ENABLING CONDITIONS

The monitor will run whenever these DTCs are not present	None
Battery voltage	11 to 13 V
Target duty ratio for the OCV	Less than 70%
Starter	OFF
Current cut status for the OCV	Not cut
Ignition switch	ON

TYPICAL MALFUNCTION THRESHOLDS

Either of the following conditions is met:	Condition 1 or 2
1. Output signal duty for OCV	Output duty ratio is 100% (always ON) but target duty ratio is less than 70%
2. Output signal duty for OCV	Output duty is ratio 3% or less despite the ECM supplying current to the OCV

COMPONENT OPERATING RANGE

Output signal duty for OCV	"More than 3%" and " less than 100%"

WIRING DIAGRAM

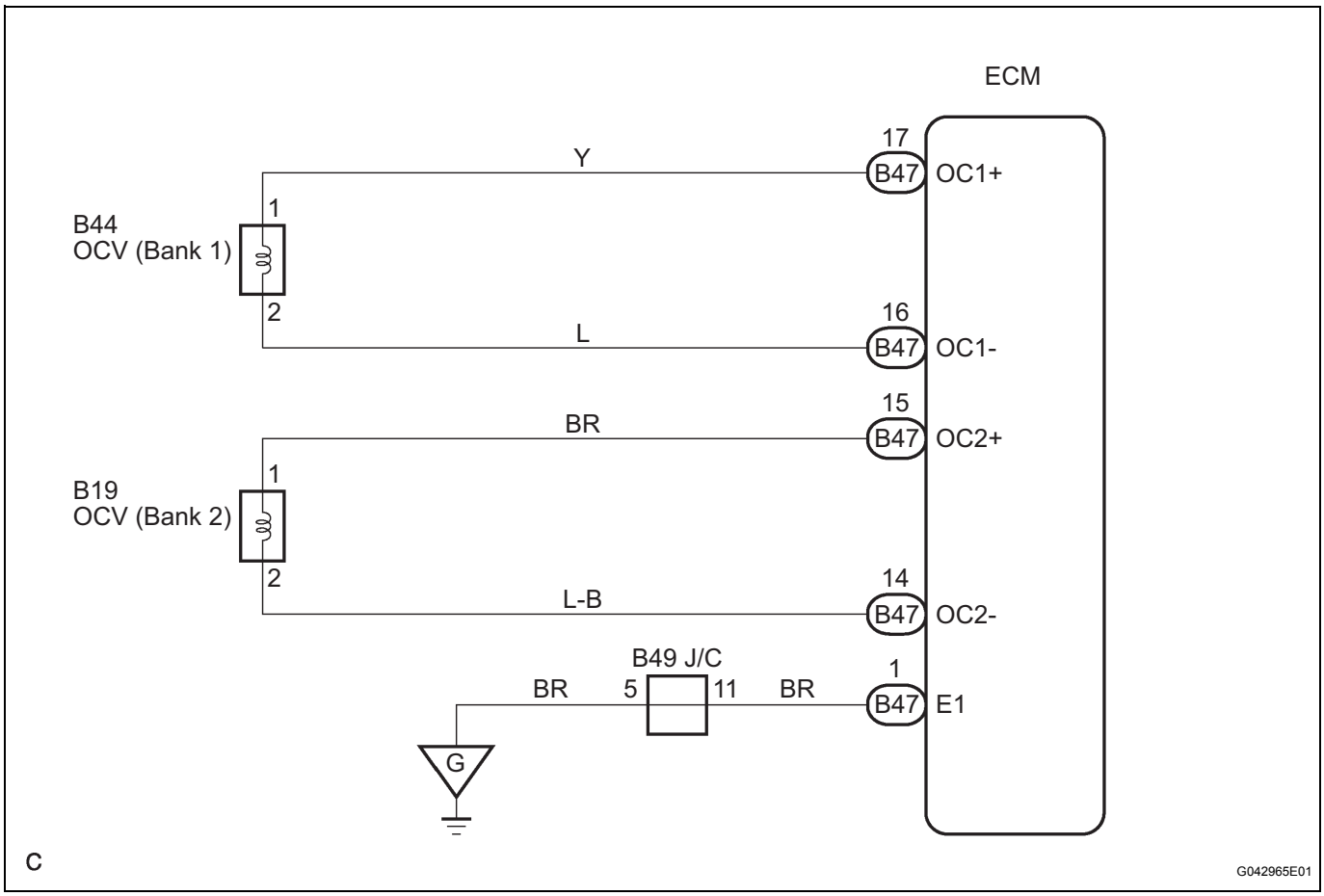

INSPECTION PROCEDURE

HINT:

- If DTC P0010 is displayed, check the bank 1 VVT system circuit.
- Bank 1 refers to the bank that include cylinder No. 1.
- If DTC P0020 is displayed, check the bank 2 VVT system circuit.
- Bank 2 refers to the bank that does not includes cylinder No. 1.
- Read freeze frame data using the intelligent tester. The ECM records vehicle and driving condition information as freeze frame data the moment a DTC is stored. When troubleshooting, freeze frame data can be helpful in determining whether the vehicle was running or stopped, whether the engine was warmed up or not, whether the air/fuel ratio was lean or rich, as well as other data recorded at the time of a malfunction.

1	PERFORM ACTIVE TEST BY INTELLIGENT TESTER (OPERATE OCV)

(a) Connect the intelligent tester to the DLC3.
(b) Start the engine and turn the tester on.
(c) Warm up the engine and idle it.
(d) Select the following menu items on the tester: DIAGNOSIS / ENHANCED OBD II / ACTIVE TEST / VVT CTRL B1 or VVT CTRL B2.
(e) Check the engine speed while operating the Oil Control Valve (OCV) using the tester.

Standard

Tester Operations	Specified Conditions
OCV OFF	Normal engine idle speed
OCV ON	Engine idles roughly or stalls (soon after OCV switched from OFF to ON)

NG → **Go to step 2**

OK

CHECK FOR INTERMITTENT PROBLEMS

ES

2 INSPECT CAMSHAFT TIMING OIL CONTROL VALVE ASSEMBLY (OCV SIGNAL)

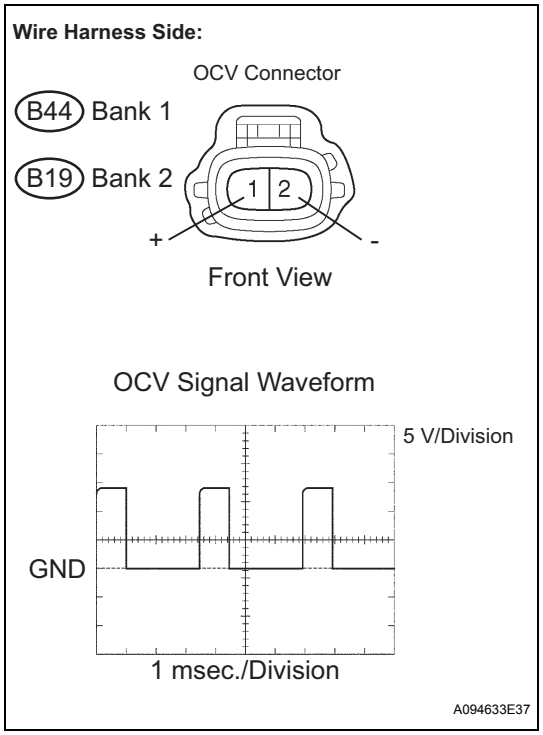

(a) Disconnect the B44 or B19 OCV connector.
(b) While idling, check the waveform between the terminals of the B44 or B19 OCV connector using an oscilloscope.
OK

Tester Connections	Specified Conditions
+ (B44-1) - - (B44-2)	Correct waveform appears
+ (B19-1) - - (B19-2)	Correct waveform appears

(c) Reconnect the OCV connector.

NG → **Go to step 3**

OK

REPLACE CAMSHAFT TIMING OIL CONTROL VALVE ASSEMBLY

3	INSPECT ECM (OCV SIGNAL)

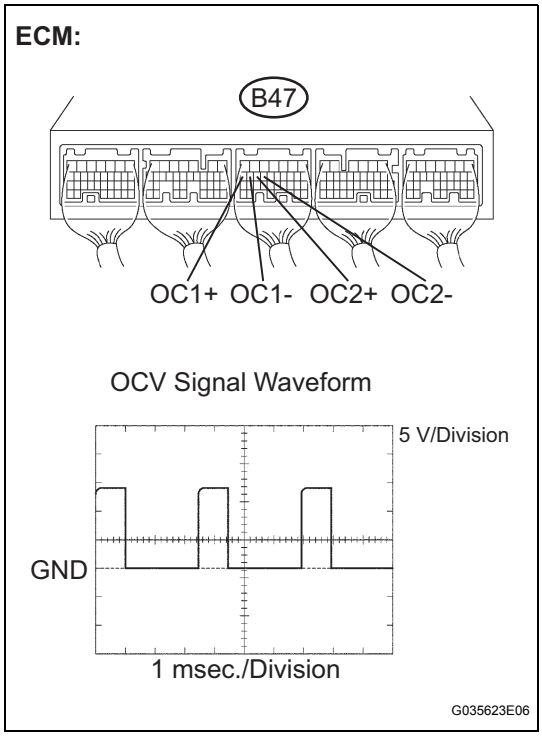

(a) Inspect the ECM using an oscilloscope.
(b) While idling, check the waveform between the terminals of the B47 ECM connector.
OK

Tester Connections	Specified Conditions
OC1+ (B47-17) - OC1- (B47-16)	Correct waveform appears
OC2+ (B47-15) - OC2- (B47-14)	Correct waveform appears

NG → **Go to step 4**

OK

REPAIR OR REPLACE HARNESS OR CONNECTOR (OCV SIGNAL OPEN CIRCUIT)

4	CHECK HARNESS AND CONNECTOR (OCV SIGNAL SHORT CIRCUIT)

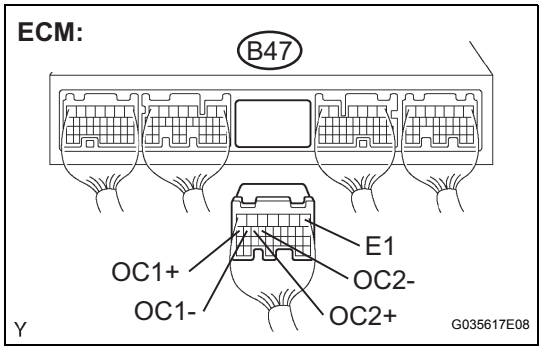

(a) Disconnect the B44 or B19 OCV connector.
(b) Disconnect the B47 ECM connector.
(c) Measure the resistance between the wire harness side connectors.
Standard resistance (Check for short)

Symbols (Terminal No.)	Specified condition
OC1+ (B47-17) - E1 (B47-1)	10 kΩ or higher
OC1- (B47-16) - E1 (B47-1)	10 kΩ or higher
OC2+ (B47-15) - E1 (B47-1)	10 kΩ or higher
OC2- (B47-14) - E1 (B47-1)	10 kΩ or higher

NG → **REPAIR OR REPLACE HARNESS OR CONNECTOR**

OK

REPLACE ECM

DTC	P0011	Camshaft Position "A" - Timing Over-Advanced or System Performance (Bank 1)
DTC	P0012	Camshaft Position "A" - Timing Over-Retarded (Bank 1)
DTC	P0021	Camshaft Position "A" - Timing Over-Advanced or System Performance (Bank 2)
DTC	P0022	Camshaft Position "A" - Timing Over-Retarded (Bank 2)

HINT:
If DTC P0011, P0012, P0021 or P0022 is present, check the VVT (Variable Valve Timing) system.

DESCRIPTION

Refer to DTC P0010 (See page ES-76).

DTC No.	DTC Detection Conditions	Trouble Areas
P0011 P0021	Advanced cam timing: With warm engine and engine speed of between 500 rpm and 4,000 rpm, all conditions (a), (b) and (c) are met (1 trip detection logic): (a) Difference between target and actual intake valve timings is more than 5° CA (Crankshaft Angle) for 4.5 seconds (b) Current intake valve timing is fixed (timing changes less than 5° CA in 5 seconds) (c) Variations in VVT controller timing are more than 19° CA of maximum delayed timing (advanced)	• Valve timing • OCV for intake camshaft • OCV filter • Intake camshaft timing gear assembly • ECM
P0012 P0022	Retarded cam timing: With warm engine and engine speed of between 500 rpm and 4,000 rpm, all conditions (a), (b) and (c) are met (2 trip detection logic): (a) Difference between target and actual intake valve is timings more than 5° CA (Crankshaft Angle) for 4.5 seconds (b) Current intake valve timing is fixed (timing changes less than 5° CA in 5 seconds) (c) Variations in VVT controller timing is 19° CA or less of maximum delayed timing (retarded)	• Valve timing • OCV for intake camshaft • OCV filter • Intake camshaft timing gear assembly • ECM

MONITOR DESCRIPTION

The ECM optimizes the intake valve timing using the VVT (Variable Valve Timing) system to control the intake camshaft. The VVT system includes the ECM, the Oil Control Valve (OCV) and the VVT controller. The ECM sends a target duty-cycle control signal to the OCV. This control signal regulates the oil pressure applied to the VVT controller. The VVT controller can advance or retard the intake camshaft. If the difference between the target and actual intake valve timings is large, and changes in actual intake valve timing are small, the ECM interprets this as the VVT controller stuck malfunction and sets a DTC.

Example:

A DTC will be set when the following conditions 1), 2) and 3) are met:

1) The difference between the target and actual intake valve timings is more than 5° CA (Crankshaft Angle) and the condition continues for more than 4.5 seconds.

2) It takes 5 seconds or more to change the valve timing by 5° CA.

3) After above conditions 1) and 2) are met, the OCV is forcibly activated 63 times or more.
DTCs P0011 and P0021 (Advanced Cam Timing) are subject to 1 trip detection logic.
DTCs P0012 and P0022 (Retarded Cam Timing) are subject to 2 trip detection logic.
These DTCs indicate that the VVT controller cannot operate properly due to OCV malfunctions or the presence of foreign objects in the OCV.
The monitor will not run unless the following conditions are met:
- The engine is warm (the engine coolant temperature is 75°C [167°F] or more).
- The vehicle has been driven at more than 40 mph (64 km/h) for 3 minutes.
- The engine has idled for 3 minutes.

MONITOR STRATEGY

Related DTCs	P0011: Advanced intake camshaft timing (bank 1) P0012: Retarded intake camshaft timing (bank 1) P0021: Advanced intake camshaft timing (bank 2) P0022: Retarded intake camshaft timing (bank 2)
Required sensors / components (Main)	VVT OCV, VVT Actuator
Required sensors / components (Related)	Crankshaft position sensor, Camshaft position sensor, ECT sensor
Frequency of operation	Once per driving cycles
Duration	Less than 10 seconds
MIL operation	P0011 and P0021: Immediate P0012 and P0022: 2 driving cycles
Sequence operation	None

TYPICAL ENABLING CONDITIONS

The monitor will run whenever these DTCs are not present	P0100, P0101, P0102, P0103 (MAF Sensor), P0115, P0116, P0117, P0118 (ECT Sensor), P0125 (Insufficient ECT for Closed Loop), P0335 (CKP Sensor), P0340 (VVT Sensor 1, 2), P0351, P0352, P0353, P0354, P0355, P0356 (Ignitor)
Battery voltage	11 V or more
Engine RPM	500 to 4,000 rpm
ECT	75 to 100°C (167 to 212°F)

TYPICAL MALFUNCTION THRESHOLDS

P0011, P0021:

Duration of valve timing	More than 5° CA (Crankshaft angle)
Valve timing	No change at advanced valve timing

P0012, P0022:

Duration of valve timing	More than 5° CA (Crankshaft angle)
Valve timing	No change at retarded valve timing

If the difference between the target and actual camshaft timings is greater than the specified value, the ECM operates the VVT actuator.
Then, the ECM monitors the camshaft timing change for 5 seconds.

WIRING DIAGRAM

Refer to DTC P0010 (See page ES-78).

INSPECTION PROCEDURE

Abnormal bank	Advanced timing over (Valve timing is out of specified range)	Retarded timing over (Valve timing is out of specified range)
Bank 1	P0011	P0012
Bank 2	P0021	P0022

HINT:
- If DTC P0011 or P0012 is displayed, check the bank 1 VVT system circuit.
- Bank 1 refers to the bank that includes cylinder No. 1.
- If DTC P0021 or P0022 is displayed, check the bank 2 VVT system circuit.
- Bank 2 refers to the bank that does not include cylinder No. 1.
- Read freeze frame data using the intelligent tester. The ECM records vehicle and driving condition information as freeze frame data the moment a DTC is stored. When troubleshooting, freeze frame data can be helpful in determining whether the vehicle was running or stopped, whether the engine was warmed up or not, whether the air/fuel ratio was lean or rich, as well as other data recorded at the time of a malfunction.

1	CHECK ANY OTHER DTCS OUTPUT (IN ADDITION TO DTC P0011, P0012, P0021 OR P0022)

ES

(a) Connect the intelligent tester to the DLC3.
(b) Turn the ignition switch on (IG) and turn the tester on.
(c) Select the following menu items: DIAGNOSIS / ENHANCED OBD II / DTC INFO / CURRENT CODES.
(d) Read DTCs.

Result

Display (DTC Output)	Proceed to
P0011, P0012, P0021 or P0022	A
P0011, P0012, P0021 or P0022 and other DTCs	B

HINT:
If any DTCs other than P0011, P0012, P0021 or P0022 are output, troubleshoot those DTCs first.

B → GO TO DTC CHART

A

2	PERFORM ACTIVE TEST BY INTELLIGENT TESTER (OPERATE OCV)

(a) Connect the intelligent tester to the DLC3.
(b) Start the engine and turn the tester on.
(c) Warm up the engine.
(d) Select the following menu items on the tester: DIAGNOSIS / ENHANCED OBD II / ACTIVE TEST / VVT CTRL B1.
(e) Check the engine speed while operating the Oil Control Valve (OCV) using the tester.

OK

Tester Operations	Specified Conditions
OCV OFF	Normal engine idle speed
OCV ON	Engine idles roughly or stalls (soon after OCV switched from OFF to ON)

NG → Go to step 4

OK

3	CHECK WHETHER DTC OUTPUT RECURS (DTC P0011, P0012, P0021 OR P0022)

(a) Connect the intelligent tester to the DLC3.
(b) Turn the ignition switch on (IG) and turn the tester on.
(c) Clear DTCs (See page ES-44).
(d) Start the engine and warm it up.
(e) Select check mode using the tester (See page ES-48).
(f) Drive the vehicle for more than 10 minutes.
(g) Read DTCs using the tester.
OK:
No DTC output.

ES

NG → **Go to step 4**

OK

END

4	CHECK VALVE TIMING (CHECK FOR LOOSE AND JUMPED TEETH ON TIMING CHAIN)

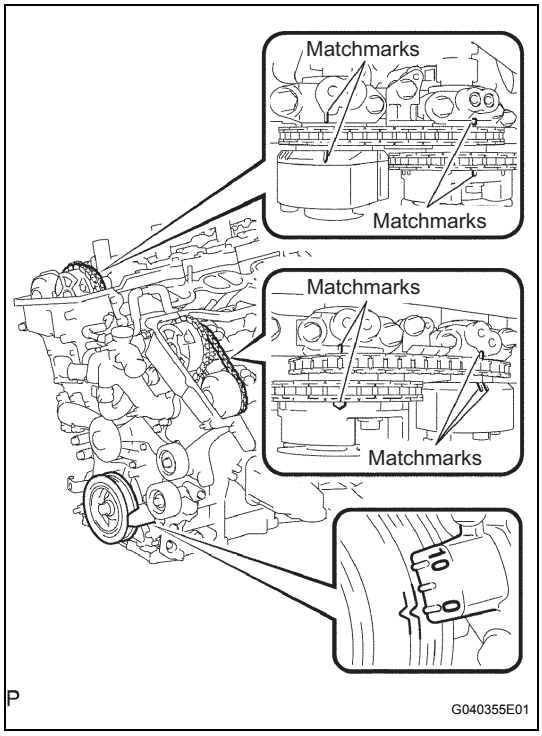

(a) Remove the cylinder head covers RH and LH.
(b) Turn the crankshaft to align the matchmarks of the crankshaft.
(c) Align the notch of the crankshaft pulley to the "0" position.
(d) Check if the matchmarks of the camshaft pulley and camshaft bearing cap align.
(e) Turn the crankshaft clockwise by 360° if the matchmarks do not align. Check if they align once again.
OK:
The matchmarks of the camshaft pulley and the camshaft bearing cap align when the notch of the crankshaft pulley is in the "0" position.

NG → **ADJUST VALVE TIMING**

OK

5	INSPECT CAMSHAFT TIMING OIL CONTROL VALVE ASSEMBLY (OCV)

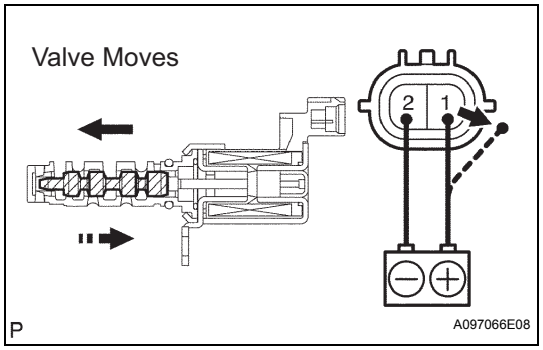

(a) Remove the OCV.
(b) Measure the resistance between the terminals of the OCV.
Resistance:
6.9 to 7.9 Ω at 20°C (68°F)
(c) Apply the positive battery voltage to terminal 1 and negative battery voltage to terminal 2. Check the valve operation.
OK:
Valve moves quickly.
(d) Reinstall the OCV.

NG → **REPLACE CAMSHAFT TIMING OIL CONTROL VALVE ASSEMBLY**

OK

6	CHECK OIL PIPE AND OIL CONTROL VALVE FILTER

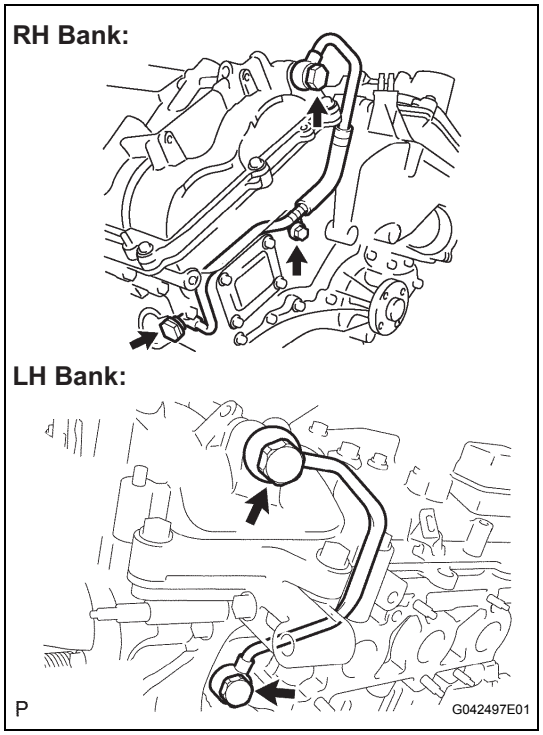

(a) Remove the oil pipe No. 1 or No. 2.
(b) Remove the oil control valve filter.
(c) Check that the filter and pipe are not clogged.
OK:
The filter and pipe are not clogged.

NG → **REPLACE OIL PIPE OR OIL CONTROL VALVE FILTER**

OK

7	REPLACE CAMSHAFT TIMING GEAR ASSEMBLY

NEXT

ES

8	CHECK WHETHER DTC OUTPUT RECURS

(a) Connect the intelligent tester to the DLC3.
(b) Turn the ignition switch on (IG) and turn the tester on.
(c) Clear DTCs (See page ES-44).
(d) Start the engine and warm it up.
(e) Select the check mode using the tester (See page ES-48).
(f) Drive the vehicle for more than 10 minutes.
(g) Confirm that no DTC is set using the tester.
OK:
No DTC output.
HINT:
DTC P0011, P0012, P0021 or P0022 is output when foreign objects in engine oil are caught in some parts of the system. These codes will stay registered even if the system returns to normal after a short time. These foreign objects are then captured by the oil filter, thus eliminating the source of the problem.

NG → **REPLACE ECM**

OK

END

DTC	P0013	Camshaft Position "B" Actuator Circuit / Open (Bank 1)

DTC	P0023	Camshaft Position "B" Actuator Circuit / Open (Bank 2)

HINT:
These DTCs relate to the Oil Control Valve (OCV) for exhaust camshaft.

DESCRIPTION

The Variable Valve Timing (VVT) system controls the exhaust camshaft to provide the optimal valve timing for every driving condition. This control is performed based on the signals, such as intake air volume, throttle position and engine coolant temperature.
The ECM controls the Oil Control Valve (OCV), based on the signals output from the sensors. The VVT controller regulates the exhaust camshaft angle using oil pressure through the OCV. As a result, the relative position between the camshaft and the crankshaft becomes optimal, and the engine torque and fuel economy improve, and exhaust emissions decrease under overall driving conditions. Also, the ECM detects the actual valve timing using the signals from the camshaft position sensor and the crankshaft position sensor, and performs feedback control. This is how target valve timing is achieved by the ECM.

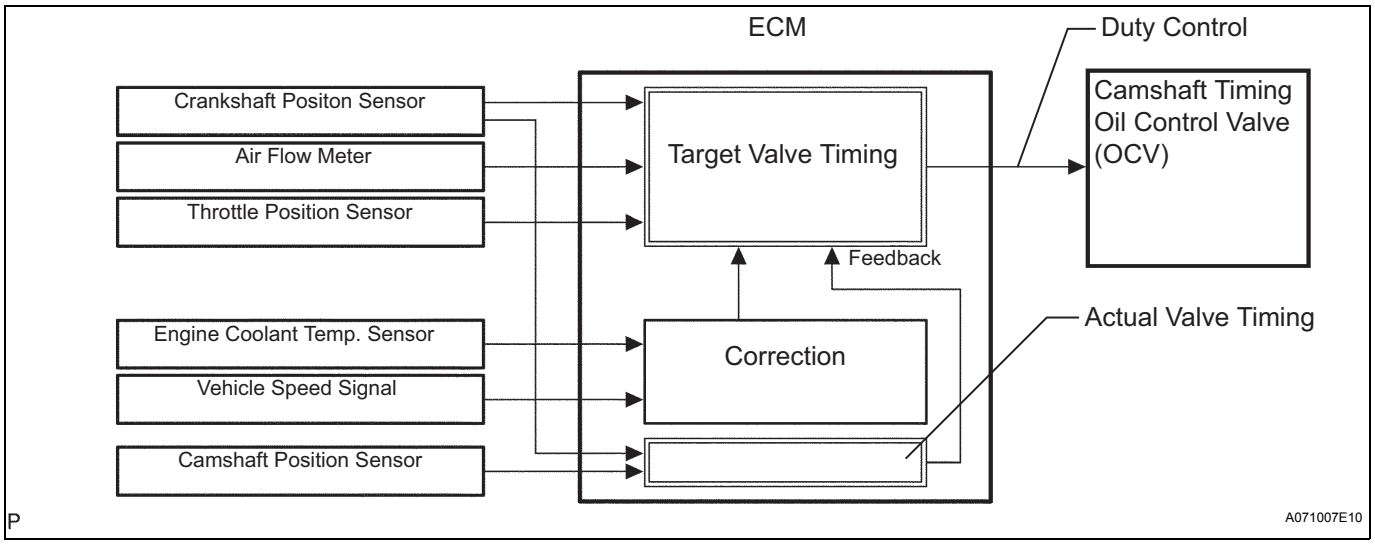

DTC No.	DTC Detection Conditions	Trouble Areas
P0013	Open or short in OCV exhaust camshaft circuit	• Open or short in OCV for exhaust camshaft circuit • OCV for exhaust camshaft (bank1) • ECM
P0023	Open or short in OCV exhaust camshaft circuit	• Open or short in OCV for exhaust camshaft circuit • OCV for exhaust camshaft (bank 2) • ECM

MONITOR DESCRIPTION

The ECM optimizes the valve timing using the VVT system to control the exhaust camshaft. The VVT system includes the ECM, the OCV (for exhaust camshaft) and the VVT controller. The ECM sends a target duty-cycle control signal to the OCV (for exhaust camshaft). This control signal regulates the oil pressure supplied to the VVT controller. The VVT controller can advance or retard the exhaust camshaft. After the ECM sends the target duty-cycle signal to the OCV (for exhaust camshaft), the ECM monitors the OCV (for exhaust camshaft) current to establish an actual duty-cycle. The ECM determines the existence of a malfunction and sets the DTC when the actual duty-cycle ratio varies from the target duty-cycle ratio.

MONITOR STRATEGY

Related DTCs	P0013: Exhaust VVT OCV (bank 1) open/short P0023: Exhaust VVT OCV (bank 2) open/short
Required Sensors / Components (Main)	VVT OCV (Variable Valve Timing Oil Control Valve)
Required Sensors/Components (Related)	-
Frequency of Operation	Continuous
Duration	1 second
MIL Operation	Immediate
Sequence of Operation	None

TYPICAL ENABLING CONDITIONS

The monitor will run whenever these DTCs are not present	None
Battery voltage	11 to 13 V
Target duty ratio for exhaust VVT OCV	Less than 70%
Starter	OFF
Ignition switch	ON
Current cut status for exhaust VVT OCV	Not cut

TYPICAL MALFUNCTION THRESHOLDS

Exhaust VVT OCV condition	No operation record

WIRING DIAGRAM

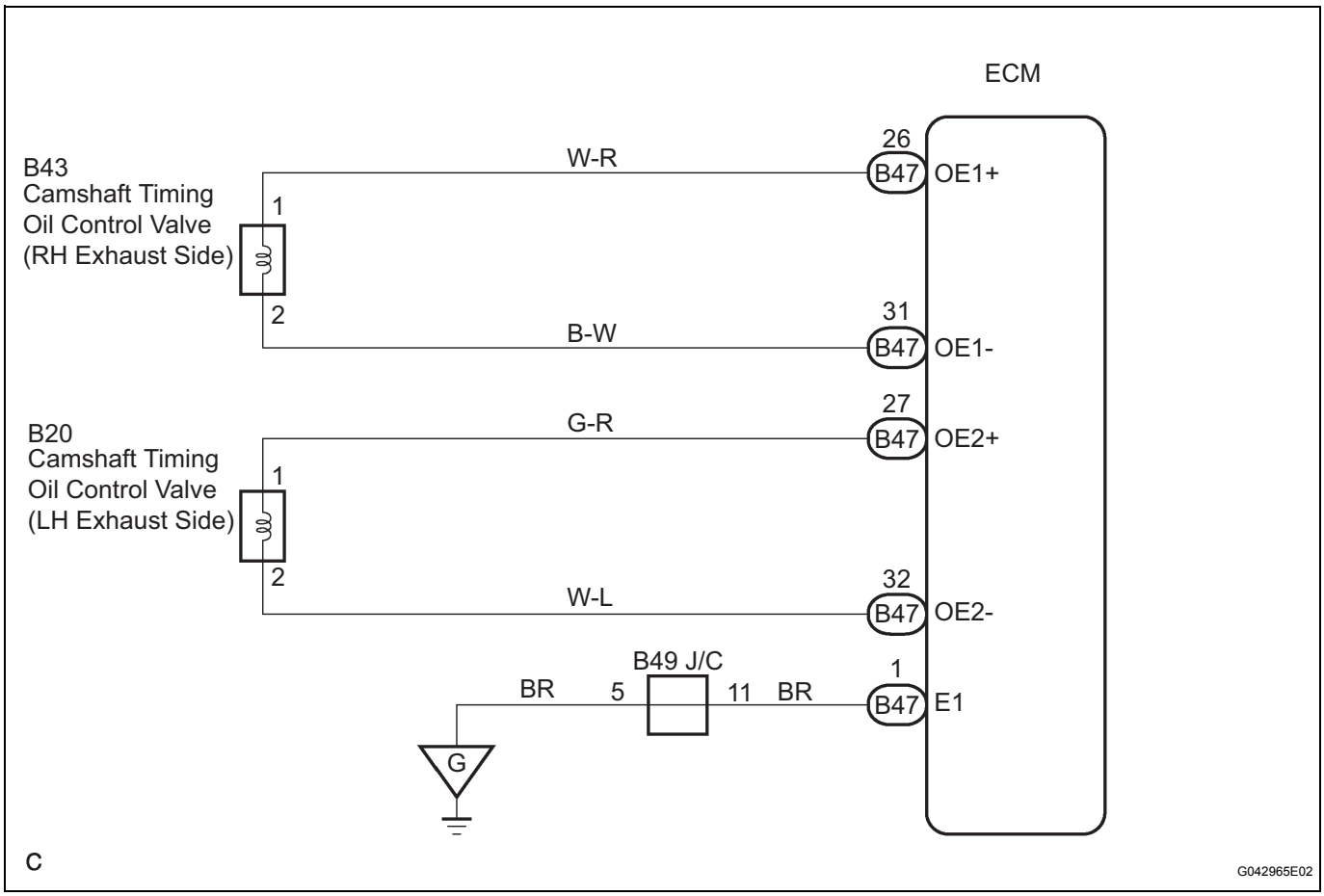

INSPECTION PROCEDURE

HINT:

- If DTC P0013 is displayed, check the right bank VVT system for exhaust camshaft circuit.
- If DTC P0023 is displayed, check the left bank VVT system for exhaust camshaft circuit.
- Read freeze frame data using the intelligent tester. The ECM records vehicle and driving condition information as freeze frame data the moment a DTC is stored. When troubleshooting, freeze frame data can be helpful in determining whether the vehicle was running or stopped, whether the engine was warmed up or not, whether the air/fuel ratio was lean or rich, as well as other data recorded at the time of a malfunction.

1	PERFORM ACTIVE TEST BY INTELLIGENT TESTER (OPERATE OCV)

(a) Connect the intelligent tester to the DLC3.
(b) Start the engine and warm it up.
(c) Select the following menu items on the tester: DIAGNOSIS / ENHANCED OBD II / ACTIVE TEST / VVT EX B1 or VVT EX B2.
(d) Check the engine speed while operating the Oil Control Valve (OCV) using the tester.

Standard

Tester Operations	Specified Conditions
OCV OFF	Normal engine idle speed
OCV ON	Engine idles roughly or stalls (soon after OCV switched from OFF to ON)

NG → Go to step 2

OK

CHECK FOR INTERMITTENT PROBLEMS

2 INSPECT CAMSHAFT TIMING OIL CONTROL VALVE ASSEMBLY (OCV SIGNAL)

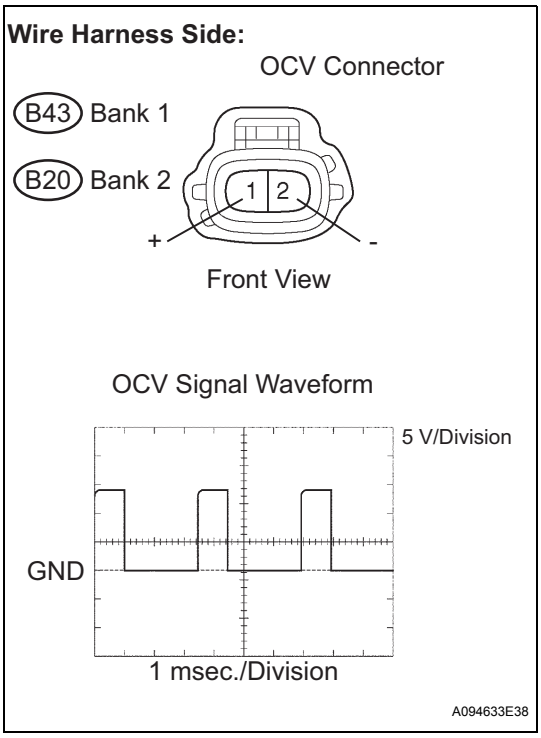

(a) Disconnect the B43 or B20 OCV connector.
(b) While idling, check the waveform between the terminals of the B43 or B20 OCV connector using an oscilloscope.
OK

Tester Connections	Specified Conditions
+ (B43-1) - - (B43-2)	Correct waveform appears
+ (B20-1) - - (B20-2)	Correct waveform appears

(c) Reconnect the OCV connector.

NG → Go to step 3

OK

REPLACE CAMSHAFT TIMING OIL CONTROL VALVE ASSEMBLY

3	CHECK ECM (OCV SIGNAL)

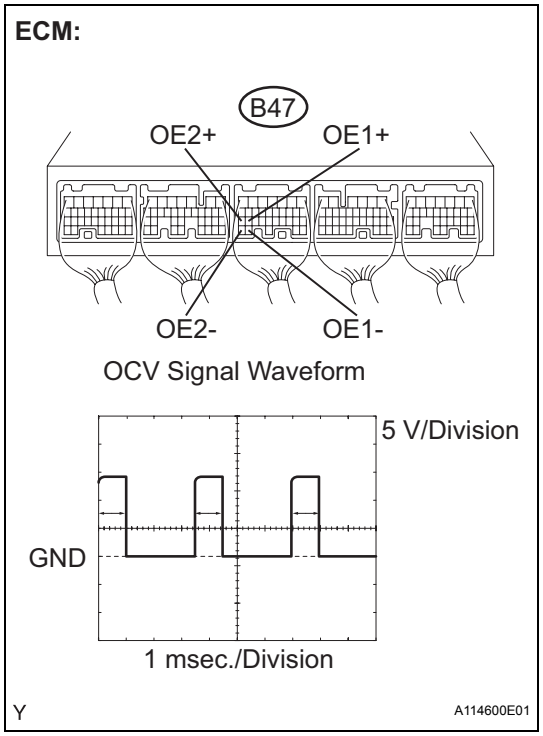

(a) Inspect the ECM using an oscilloscope.
(b) While idling, check the waveform between the terminals of the B47 ECM connector.
OK

Tester Connections	Specified Conditions
OE1+ (B47-26) - OE1- (B47-31)	Correct waveform appears
OE2+ (B47-27) - OE2- (B47-32)	Correct waveform appears

NG → **Go to step 4**

ES

OK

REPAIR OR REPLACE HARNESS OR CONNECTOR

4	CHECK HARNESS AND CONNECTOR (OCV SIGNAL SHORT CIRCUIT)

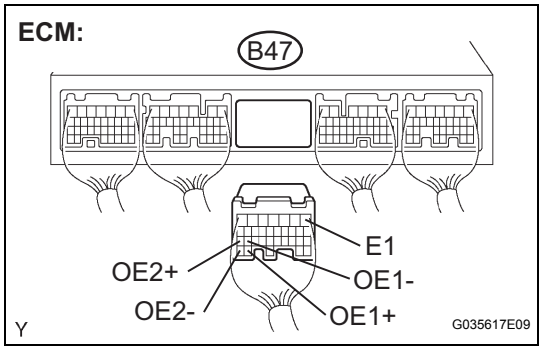

(a) Disconnect the B43 or B20 OCV connector.
(b) Disconnect the B47 ECM connector.
(c) Measure the resistance between the wire harness side connectors.
Standard resistance (Check for short)

Tester Connections	Specified Conditions
OE1+ (B47-26) - E1 (B47-1)	10 kΩ or higher
OE1- (B47-31) - E1 (B47-1)	10 kΩ or higher
OE2+ (B47-27) - E1 (B47-1)	10 kΩ or higher
OE2- (B47-32) - E1 (B47-1)	10 kΩ or higher

NG → **REPAIR OR REPLACE HARNESS OR CONNECTOR**

OK

REPLACE ECM

DTC	P0014	Camshaft Position "B" - Timing Over-Advanced or System Performance (Bank 1)
DTC	P0015	Camshaft Position "B" - Timing Over-Retarded (Bank 1)
DTC	P0024	Camshaft Position "B" - Timing Over-Advanced or System Performance (Bank 2)
DTC	P0025	Camshaft Position "B" - Timing Over-Retarded (Bank 2)

HINT:
If DTC P0014, P0015, P0024 or P0025 is present, check the VVT (Variable Valve Timing) system.

DESCRIPTION

Refer to DTC P0013 (See page ES-87).

DTC No.	DTC Detection Condition	Trouble Area
P0014 P0024	Condition (a) or (b) continues after engine is warmed up and engine speed is at 500 to 4,000 rpm (Problem of the advanced OCV for exhaust camshaft.): (a) Valve timing does not change from current valve timing (b) Current valve timing is fixed	• Valve timing • OCV for exhaust camshaft • OCV filter • Exhaust camshaft timing gear assembly • ECM
P0015 P0025	Condition (a) or (b) continues after engine is warmed up and engine speed is at 500 to 4,000 rpm (Problem of the retarded OCV.): (a) Valve timing does not change from current valve timing (b) Current valve timing is fixed	• Valve timing • OCV for exhaust camshaft • OCV filter • Exhaust camshaft timing gear assembly • ECM

MONITOR DESCRIPTION

DTC P0014 and P0024
The ECM compares current valve timing with target valve timing, while the engine is running and after being warmed up, in order to monitor the VVT system on the exhaust side. Valve timing is calculated from the positions of the camshaft and crankshaft. The ECM controls the engine so that current valve timing meets target valve timing. If these timings are not met, the ECM determines this as a malfunction.
DTC P0015 and P0025
The ECM compares current valve timing with target valve timing, while the engine is running and after being warmed up, in order to monitor the VVT system on the exhaust side. Valve timing is calculated from the positions of the camshaft and crankshaft. The ECM controls the engine so that current valve timing meets target valve timing. If these timings are not met, the ECM determines this as a malfunction.

MONITOR STRATEGY

Related DTCs	P0014: Advanced exhaust camshaft timing (bank 1) P0015: Retarded exhaust camshaft timing (bank 1) P0024: Advanced exhaust camshaft timing (bank 2) P0025: Retarded exhaust camshaft timing (bank 2)
Required Sensors / Components (Main)	VVT OCV and VVT Actuator

Required Sensors / Components (Related)	P0014 and P0015: Exhaust camshaft control actuator bank 1 Exhaust OCV bank 1 P0024 and P0025: Exhaust camshaft control actuator bank 2 Exhaust OCV bank 2
Frequency of Operation	Continuously
Duration	Less than 10 seconds
MIL Operation	P0014 and P0024: Immediate P0015 and P0025: 2 driving cycles
Sequence of Operation	None

TYPICAL ENABLING CONDITIONS

The monitor will run whenever these DTCs are not present	None
Battery voltage	11 V or more
Engine RPM	500 to 4,000 rpm
Engine coolant temperature	75 to 100°C (167 to 212°F)

TYPICAL MALFUNCTION THRESHOLDS

One of the following conditions met	Conditions 1, 2 or 3
1. Deviation from target valve timing	More than 5° CA (Crankshaft angle)
2. Actual valve timing	No change
3. Camshaft position	Advanced

If the difference between the target and actual camshaft timings is greater than the specified value, the ECM operates the VVT actuator.
Then, the ECM monitors the camshaft timing change for 5 seconds.

WIRING DIAGRAM

Refer to DTC P0013 (See page ES-89).

INSPECTION PROCEDURE

Abnormal bank	Advanced timing over (Valve timing is out of specified range)	Retarded timing over (Valve timing is out of specified range)
Bank 1	P0014	P0015
Bank 2	P0024	P0025

HINT:
- If DTC P0014 or P0015 is displayed, check the bank 1 VVT system circuit.
- Bank 1 refers to the bank that includes cylinder No. 1.
- If DTC P0024 or P0025 is displayed, check the bank 2 VVT system circuit.
- Bank 2 refers to the bank that does not include cylinder No. 1.
- Read freeze frame data using the intelligent tester. The ECM records vehicle and driving condition information as freeze frame data the moment a DTC is stored. When troubleshooting, freeze frame data can be helpful in determining whether the vehicle was running or stopped, whether the engine was warmed up or not, whether the air/fuel ratio was lean or rich, as well as other data recorded at the time of a malfunction.

1	**CHECK ANY OTHER DTCS OUTPUT (IN ADDITION TO DTC P0014, P0015, P0024 OR P0025)**

(a) Connect the intelligent tester to the DLC3.

(b) Turn the ignition switch on (IG) and turn the tester on.
(c) Select the following menu items: DIAGNOSIS / ENHANCED OBD II / DTC INFO / CURRENT CODES.
(d) Read DTCs.

Result

Display (DTC Output)	Proceed to
P0014, P0015, P0024 or P0025	A
P0014, P0015, P0024 or P0025 and other DTCs	B

HINT:
If any DTCs other than P0014, P0015, P0024 or P0025 are output, troubleshoot those DTCs first.

B → **GO TO DTC CHART**

A

2 PERFORM ACTIVE TEST BY INTELLIGENT TESTER (OPERATE OCV)

(a) Connect the intelligent tester to the DLC3.
(b) Start the engine and turn the tester on.
(c) Warm up the engine.
(d) Select the following menu items on the tester: DIAGNOSIS / ENHANCED OBD II / ACTIVE TEST / VVT EX B1 or VVT EX B2.
(e) Check the engine speed while operating the Oil Control Valve (OCV) using the tester.

OK

Tester Operations	Specified Conditions
OCV OFF	Normal engine idle speed
OCV ON	Engine idles roughly or stalls (soon after OCV switched from OFF to ON)

NG → **Go to step 4**

OK

3 CHECK WHETHER DTC OUTPUT RECURS (DTC P0014, P0015, P0024 OR P0025)

(a) Connect the intelligent tester to the DLC3.
(b) Turn the ignition switch on (IG) and turn the tester on.
(c) Clear DTCs (See page ES-44).
(d) Start the engine and warm it up.
(e) Select check mode using the tester (See page ES-48).
(f) Drive the vehicle for more than 10 minutes.
(g) Read DTCs using the tester.
OK:
No DTC output.

NG → **Go to step 4**

OK

END

4	CHECK VALVE TIMING (CHECK FOR LOOSE AND JUMP TEETH ON TIMING CHAIN)

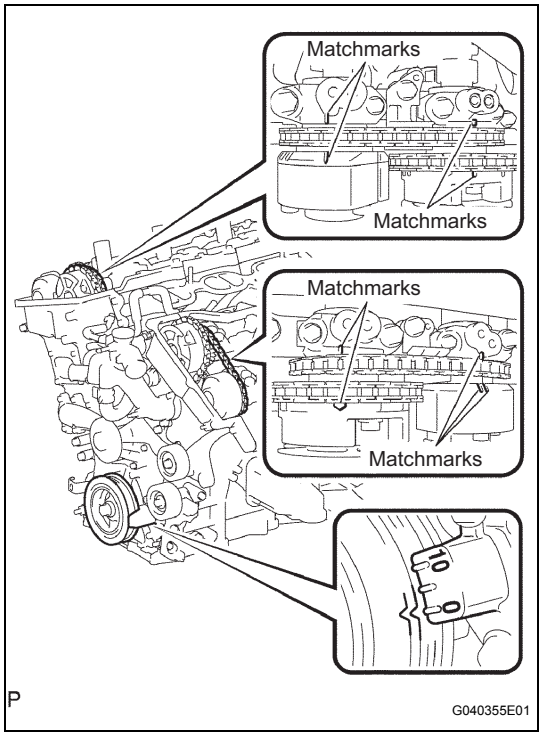

(a) Remove the cylinder head covers RH and LH.
(b) Turn the crankshaft to align the matchmarks of the crankshaft.
(c) Align the notch of the crankshaft pulley to the "0" position.
(d) Check if the matchmarks of the camshaft pulley and camshaft bearing cap align.
(e) Turn the crankshaft clockwise by 360° if the matchmarks do not align. Check if they align once again.

OK:

The matchmarks of the camshaft pulley and the camshaft bearing cap align when the notch of the crankshaft pulley is in the "0" position.

ES

NG → **ADJUST VALVE TIMING**

OK

5	INSPECT CAMSHAFT TIMING OIL CONTROL VALVE ASSEMBLY (OCV)

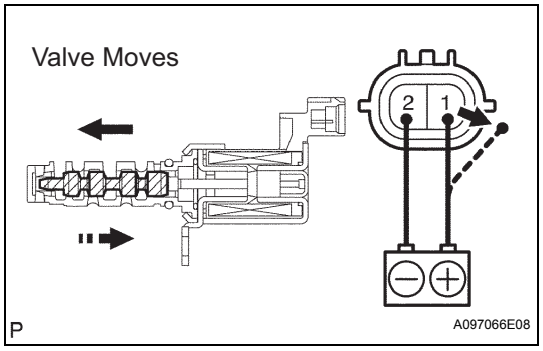

(a) Remove the OCV.
(b) Measure the resistance between the terminals of the OCV.

Standard resistance:

6.9 to 7.9 Ω at 20°C (68°F)

(c) Apply the positive battery voltage to terminal 1 and negative battery voltage to terminal 2. Check the valve operation.

OK:

Valve moves quickly.

(d) Reinstall the OCV.

NG → **REPLACE CAMSHAFT TIMING OIL CONTROL VALVE ASSEMBLY**

OK

6	CHECK OIL PIPE AND OIL CONTROL VALVE FILTER

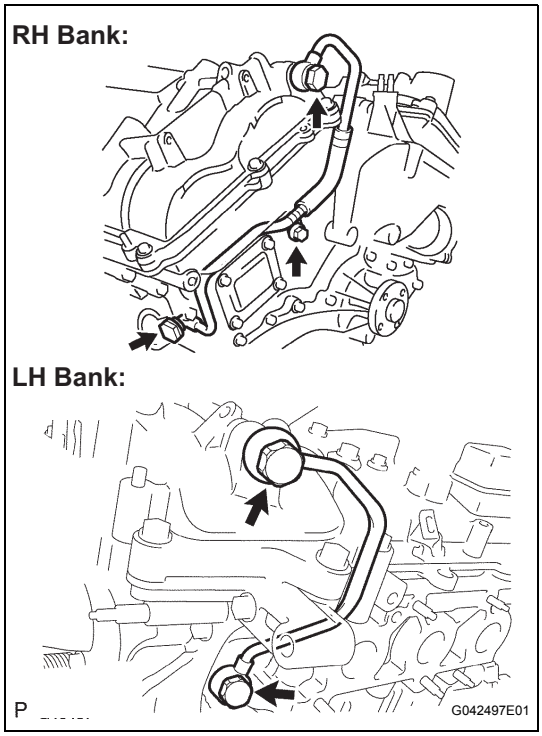

(a) Remove the oil pipe No. 1 or No. 2.
(b) Remove the oil control valve filter.
(c) Check that the filter and pipe are not clogged.
OK:
The filter and pipe are not clogged.

NG → **REPLACE OIL PIPE OR OIL CONTROL VALVE FILTER**

OK

7	REPLACE CAMSHAFT TIMING GEAR ASSEMBLY

NEXT

8	CHECK WHETHER DTC OUTPUT RECURS

(a) Connect the intelligent tester to the DLC3.
(b) Turn the ignition switch on (IG) and turn the tester on.
(c) Clear DTCs (See page ES-44).
(d) Start the engine and warm it up.
(e) Select the check mode using the tester (See page ES-48).
(f) Drive the vehicle for more than 10 minutes.
(g) Confirm that no DTC is set using the tester.
OK:
No DTC output.
HINT:
DTC P0014, P0015, P0024 or P0025 is output when foreign objects in engine oil are caught in some parts of the system. These codes will stay registered even if the system returns to normal after a short time. These foreign objects are then captured by the oil filter, thus eliminating the source of the problem.

NG → **REPLACE ECM**

OK

END

DTC	P0016	Crankshaft Position - Camshaft Position Correlation (Bank 1 Sensor A)

DTC	P0017	Crankshaft Position - Camshaft Position Correlation (Bank 1 Sensor B)

DTC	P0018	Crankshaft Position - Camshaft Position Correlation (Bank 2 Sensor A)

ES

DTC	P0019	Crankshaft Position - Camshaft Position Correlation (Bank 2 Sensor B)

DESCRIPTION

Refer to DTC P0335 (See page ES-203).

DTC No.	DTC Detection Conditions	Trouble Areas
P0016	Deviations in crankshaft and camshaft position sensor (for intake camshaft) 1 signals (2 trip detection logic)	• Mechanical system (Timing chain has jumped tooth or chain stretched) • ECM
P0017	Deviations in crankshaft and camshaft position sensor (for exhaust camshaft) 1 signals (2 trip detection logic)	• Mechanical system (Timing chain has jumped tooth or chain stretched) • ECM
P0018	Deviations in crankshaft and camshaft position sensor (for intake camshaft) 2 signals (2 trip detection logic)	• Mechanical system (Timing chain has jumped tooth or chain stretched) • ECM
P0019	Deviations in crankshaft and camshaft position sensor (for exhaust camshaft) 2 signals (2 trip detection logic)	• Mechanical system (Timing chain has jumped tooth or chain stretched) • ECM

MONITOR DESCRIPTION

DTC P0016 and P0018

The ECM optimizes the valve timing by using the VVT (Variable Valve Timing) system to control the intake camshaft. The VVT system includes the ECM, the Oil Control Valve (OCV) and the VVT controller.

The ECM sends a target duty-cycle control signal to the OCV. This control signal regulates the oil pressure applied to the VVT controller. The VVT controller can advance or retard the intake camshaft. The ECM calibrates the intake valve timing by setting the intake camshaft to the most retarded angle while the engine is idling. The ECM closes the OCV to retard the cam. The ECM stores this value as the VVT learning value. When the difference between the target and actual intake valve timings is 5° CA (Crankshaft Angle) or less, the ECM stores it.

If the VVT learning value matches the following conditions, the ECM determines the existence of a malfunction in the VVT system, and sets the DTC.

- The VVT learning value: Less than 18.5° CA, or more than 43.5° CA.
- The above condition continues for 18 seconds or more.

This DTC indicates that the intake camshaft has been installed toward the crankshaft at an incorrect angle, caused by factors such as the timing chain having jumped a tooth.

This monitor begins to run after the engine has idled for 5 minutes.

DTC P0017 and P0019

The ECM checks valve timing (VVT learning value) on the exhaust side while the engine is running at a low speed, in order to monitor the gap between current and target valve timings on the exhaust side. The VVT learning value is calculated from the positions of the camshaft and crankshaft. The camshaft will come to the most retarded position when the engine is running at a low speed. If the camshaft position is normal, the VVT learning value should be within the specified range. If the VVT learning value is not within the specified range, the ECM determines this as a malfunction.

MONITOR STRATEGY

Related DTCs	P0016: Deviation in crankshaft position sensor signal and camshaft position sensor signal (Bank 1) P0017: Deviation in crankshaft position sensor signal and camshaft position sensor signal (Bank 1 Sensor 2) P0018: Deviation in crankshaft position sensor signal and camshaft position sensor signal (Bank 2) P0019: Deviation in crankshaft position sensor signal and camshaft position sensor signal (Bank 2 Sensor 2)
Required Sensors / Components (Main)	P0016 and P0018: VVT actuator P0017 and P0019: Timing chain/belt
Required Sensors / Components (Related)	P0016 and P0018: Camshaft position sensor, Crankshaft position sensor P0017 and P0019 None
Frequency of Operation	Once per driving cycle
Duration	Less than 60 seconds
MIL Operation	2 driving cycles
Sequence of Operation	None

TYPICAL ENABLING CONDITIONS

All:

The monitor will run whenever these DTCs are not present	P0011, P0012 (VVT System1-Advance, Retard), P0021, P0022 (VVT System2-Adavance, Retard), P0115, P0116, P0117, P0118 (ECT Sensor),

P0016 and P0018:

Engine RPM	500 to 1,400 rpm

P0017 and P0019:

VVT feed back mode	Executing
VVT	Maximum advanced position
Engine RPM	500 to 1,000 rpm

TYPICAL MALFUNCTION THRESHOLDS

P0016 and P0018:

One of the following conditions 1 or 2 is met:	-
1. VVT learning value at maximum retarded valve timing	Less than 18.5° CA
2. VVT learning value at maximum retarded valve timing	More than 43.5° CA

P0017 and P0019:

One of the following conditions 1 or 2 is met:	-
1. VVT learning value	Less than 77° CA
2. VVT learning value	More than 102° CA

WIRING DIAGRAM

Refer to DTC P0335 (See page ES-205).

INSPECTION PROCEDURE

HINT:

Read freeze frame data using the intelligent tester. The ECM records vehicle and driving condition information as freeze frame data the moment a DTC is stored. When troubleshooting, freeze frame data can be helpful in determining whether the vehicle was running or stopped, whether the engine was warmed up or not, whether the air/fuel ratio was lean or rich, as well as other data recorded at the time of a malfunction.

1	CHECK VALVE TIMING (CHECK FOR LOOSE AND A JUMPED TOOTH OF TIMING CHAIN)

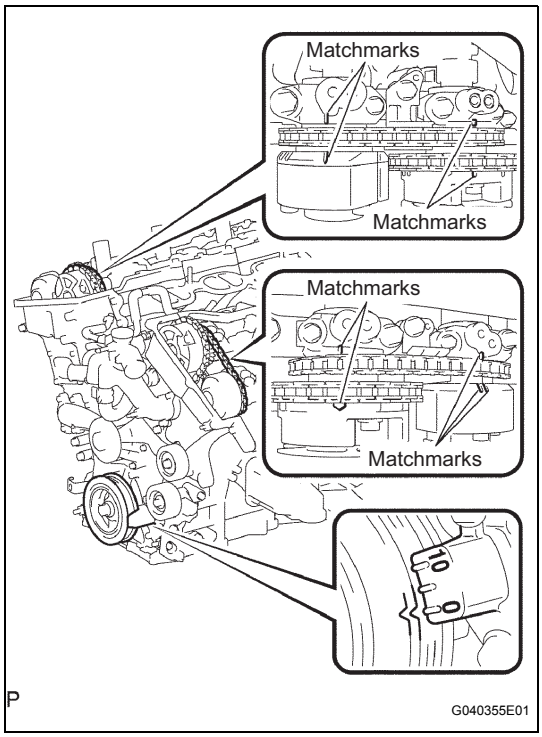

(a) Remove the cylinder head covers RH and LH.
(b) Turn the crankshaft to align the matchmarks of the crankshaft.
(c) Align the notch of the crankshaft pulley to the "0" position.
(d) Check if the matchmarks of the camshaft pulley and camshaft bearing cap align.
(e) Turn the crankshaft clockwise by 360° if the matchmarks do not align. Check if they align once again.

OK:

The matchmarks of the camshaft pulley and the camshaft bearing cap align when the notch of the crankshaft pulley is in the "0" position.

NOTICE:

After replacing the ECM or adjusting intake valve timing, confirm that the DTC output does not recur.

(f) Confirm that the DTC output does not recur.
  (1) Connect the intelligent tester to the DLC3.
  (2) Turn the ignition switch on (IG).
  (3) Turn the tester on.
  (4) Clear DTCs (See page ES-44).
  (5) Select the check mode using the tester (See page ES-48).
  (6) Start the engine and warm it up.
  (7) Allow the engine to idle for 1 minute or more, and then drive the vehicle for 1 minute or more.
  (8) Confirm that no DTC is set, using the tester.

NG → **ADJUST VALVE TIMING**

OK

REPLACE ECM

DTC	P0031	Oxygen (A/F) Sensor Heater Control Circuit Low (Bank 1 Sensor 1)

DTC	P0032	Oxygen (A/F) Sensor Heater Control Circuit High (Bank 1 Sensor 1)

DTC	P0051	Oxygen (A/F) Sensor Heater Control Circuit Low (Bank 2 Sensor 1)

DTC	P0052	Oxygen (A/F) Sensor Heater Control Circuit High (Bank 2 Sensor 1)

ES

HINT:
- Although the DTC titles say the oxygen sensor, these DTCs relate to the Air-Fuel Ratio (A/F) sensor.
- Sensor 1 refers to the sensor mounted in front of the Three-Way Catalytic Converter (TWC) and located near the engine assembly.

DESCRIPTION

Refer to DTC P2195 (See page ES-313).

HINT:
- When any of these DTCs are set, the ECM enters fail-safe mode. The ECM turns off the A/F sensor heater in fail-safe mode. Fail-safe mode continues until the ignition switch is turned off.
- The ECM provides a pulse width modulated control circuit to adjust the current through the heater. The A/F sensor heater circuit uses a relay on the +B side of the circuit.

Reference (System Diagram of Bank 1 Sensor 1):

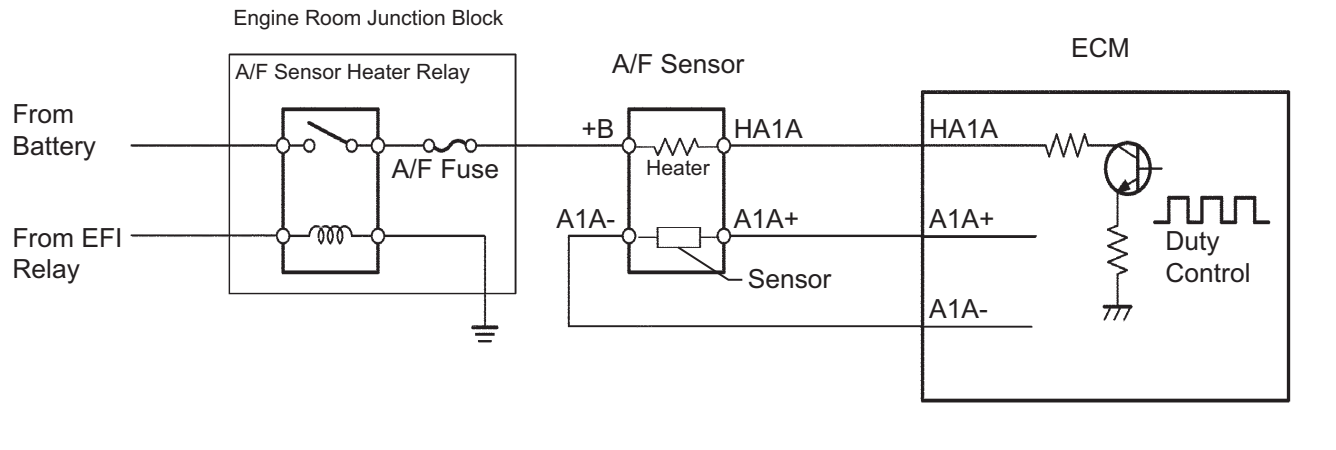

DTC No.	DTC Detection Conditions	Trouble Areas
P0031 P0051	Air-Fuel Ratio (A/F) sensor heater current less than 0.8 A (1 trip detection logic)	• Open in A/F sensor heater circuit • A/F sensor heater • A/F sensor heater relay • ECM
P0032 P0052	Air-Fuel Ratio (A/F) sensor heater current more than 10 A (1 trip detection logic)	• Short in A/F sensor heater circuit • A/F sensor heater • A/F sensor heater relay • ECM

HINT:
- Bank 1 refers to the bank that includes cylinder No. 1.
- Bank 2 refers to the bank that does not include cylinder No. 1.
- Sensor 1 refers to the closest sensor to the engine assembly.
- Sensor 2 refers to the furthest sensor away from the engine assembly.

MONITOR DESCRIPTION

The ECM uses information from the Air-Fuel Ratio (A/F) sensor to regulate the air-fuel ratio and keep it close to the stoichiometric level. This maximizes the ability of the Three-Way Catalytic Converter (TWC) to purify the exhaust gas.

The A/F sensor detects oxygen levels in the exhaust gas and transmits the information to the ECM. The inner surface of the sensor element is exposed to the outside air. The outer surface of the sensor element is exposed to the exhaust gas. The sensor element is made of platinum coated zirconia and includes an integrated heating element.

The zirconia element generates small voltage when there is a large difference in the oxygen concentrations between the exhaust gas and outside air. The platinum coating amplifies this voltage generation.

The A/F sensor is more efficient when heated. When the exhaust gas temperature is low, the sensor cannot generate useful voltage signals without supplementary heating. The ECM regulates the supplementary heating using a duty-cycle approach to adjust the average current in the sensor heater element. If the heater current is outside the normal range, the signal transmitted by the A/F sensor will be inaccurate, as a result, the ECM will be unable to regulate air-fuel ratio properly.

When the current in the A/F sensor heater is outside the normal operating range, the ECM interprets this as a malfunction in the sensor heater and sets a DTC.

Example:

The ECM sets DTC P0032 or P0052 when the current in the A/F sensor heater is more than 10 A. Conversely, when the heater current is less than 0.8 A, DTC P0031 or P0051 is set.

MONITOR STRATEGY

Related DTCs	P0031: A/F sensor heater (Bank 1) range check (Low current) P0032: A/F sensor heater (Bank 1) range check (High current) P0051: A/F sensor heater (Bank 2) range check (Low current) P0052: A/F sensor heater (Bank 2) range check (High current)
Required sensors / components (Main)	A/F sensor heater
Required sensors / components (Related)	-
Frequency of operation	Continuous
Duration	10 seconds
MIL operation	Immediate
Sequence operation	None

TYPICAL ENABLING CONDITIONS

All:

The monitor will run whenever these DTCs are not present	None

P0031 and P0051:

Battery voltage	10.5 V or more
A/F sensor heater duty ratio	50% or more
Time after engine start	10 seconds or more

P0032 and P0052:

Time after engine start	10 seconds or more

TYPICAL MALFUNCTION THRESHOLDS

P0031 and P0051:

A/F sensor heater current	Less than 0.8 A

P0032 and P0052:

Hybrid IC high current limit port	Fail

COMPONENT OPERATING RANGE

A/F sensor heater current	1.8 to 3.4 A at 20°C (68°F)

MONITOR RESULT

Refer to Checking Monitor Status for detailed information (See page ES-25).
The test value and test limit information are described as shown in the following table. Check the monitor result and test values after performing the monitor drive pattern (See page ES-26).

- TID (Test Identification Data) is assigned to each emissions-related component.
- TLT (Test Limit Type):
  If TLT is 0, the component is malfunctioning when the test value is higher than the test limit.
  If TLT is 1, the component is malfunctioning when the test value is lower than the test limit.
- CID (Component Identification Data) is assigned to each test value.
- Unit Conversion is used to calculate the test value indicated on generic OBD II scan tools.

TID $07: A/F sensor heater

TLT	CID	Unit Conversion	Description of Test Data	Description of Test Limit
1	$01	Multiply by 0.00017 (A)	Maximum heater current (Bank 1)	Malfunction criterion for A/F sensor heater
1	$10	Multiply by 0.00017 (A)	Maximum heater current (Bank 2)	Malfunction criterion for A/F sensor heater

WIRING DIAGRAM

Refer to DTC P2195 (See page ES-317).

INSPECTION PROCEDURE

HINT:
Read freeze frame data using the intelligent tester. The ECM records vehicle and driving condition information as freeze frame data the moment a DTC is stored. When troubleshooting, freeze frame data can be helpful in determining whether the vehicle was running or stopped, whether the engine was warmed up or not, whether the air/fuel ratio was lean or rich, as well as other data recorded at the time of a malfunction.

1 INSPECT AIR FUEL RATIO SENSOR (HEATER RESISTANCE)

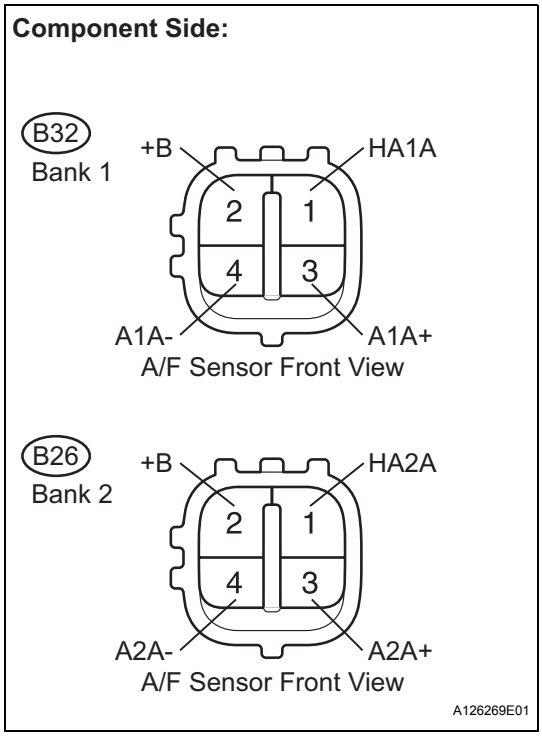

(a) Disconnect the B26 or B32 A/F sensor connector.
(b) Measure the resistance between the terminals of the A/F sensor connector.
Standard resistance:
Bank 1

Tester Connections	Specified Conditions
HA1A (1) - +B (2)	1.8 to 3.4 Ω at 20°C (68°F)
HA1A (1) - A1A- (4)	10 kΩ or higher

Bank 2

Tester Connections	Specified Conditions
HA2A (1) - +B (2)	1.8 to 3.4 Ω at 20°C (68°F)
HA2A (1) - A2A- (4)	10 kΩ or higher

(c) Reconnect the A/F sensor connector.

NG → **REPLACE AIR FUEL RATIO SENSOR**

OK

2 INSPECT ENGINE ROOM JUNCTION BLOCK ASSEMBLY (A/F SENSOR HEATER RELAY)

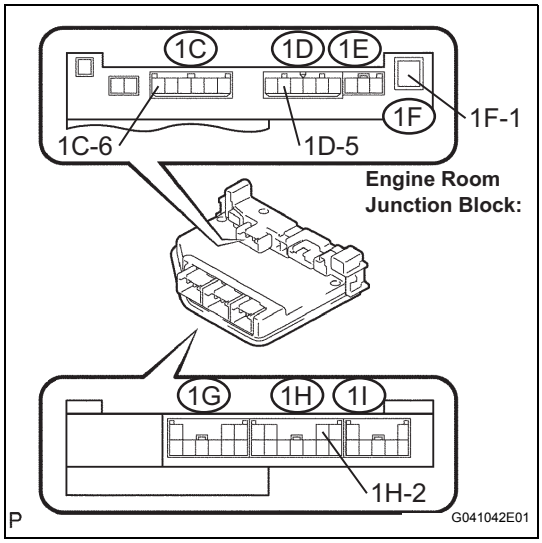

(a) Remove the engine room junction block.
(b) Measure the A/F sensor heater relay resistance.
Standard resistance

Tester Connections	Specified Conditions
1F-1 - 1C-6	10 kΩ or higher
1F-1 - 1C-6	Below 1 Ω (when battery voltage applied to terminals 1D-5 and 1H-2)

(c) Reinstall the engine room junction block.

NG → **REPLACE ENGINE ROOM JUNCTION BLOCK ASSEMBLY**

OK

3	INSPECT ECM (HA1A OR HA2A VOLTAGE)

ECM:

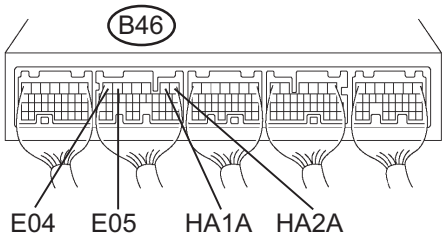

A131509E01

(a) Turn the ignition switch on (IG).
(b) Measure the voltage between the terminals of the B46 ECM connector.

Standard voltage

Tester Connections	Specified Conditions
HA1A (B46-2) - E04 (B46-7)	9 to 14 V
HA2A (B46-1) - E05 (B46-6)	9 to 14 V

HINT:
- The HA1A means the A/F sensor bank 1 sensor 1.
- The HA2A means the A/F sensor bank 2 sensor 1.

OK → **REPLACE ECM**

NG

ES

4	CHECK HARNESS AND CONNECTOR (A/F SENSOR - ECM, A/F SENSOR - A/F SENSOR HEATER RELAY)

Wire Harness Side:

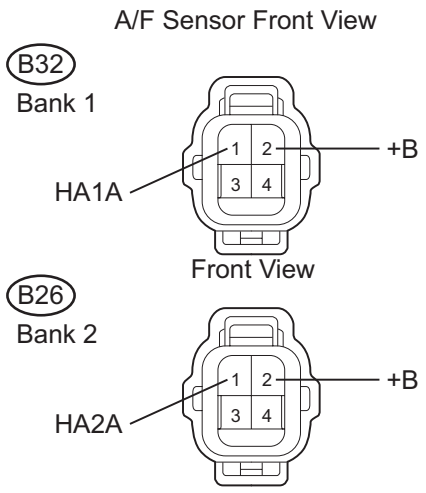

ECM:

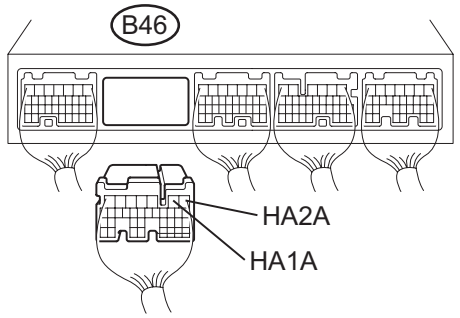

Wire Harness Side:

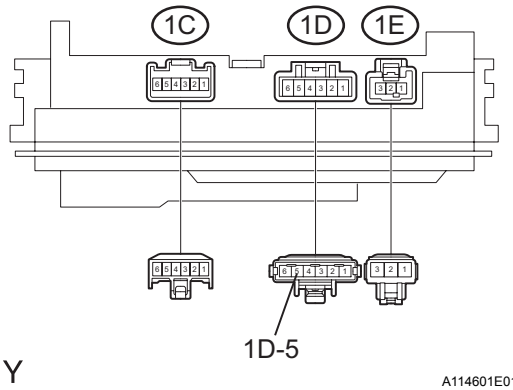

(a) Check the harness and the connector between the ECM and the A/F sensor.
(1) Disconnect the B26 or B32 A/F sensor connector.
(2) Disconnect the B46 ECM connector.
(3) Measure the resistance.

Standard resistance (Check for open)

Tester Connections	Specified Conditions
HA1A (B32-1) - HA1A (B46-2)	Below 1 Ω
HA2A (B26-1) - HA2A (B46-1)	Below 1 Ω

Standard resistance (Check for short)

Tester Connections	Specified Conditions
HA1A (B32-1) or HA1A (B46-2) - Body ground	10 kΩ or higher
HA2A (B26-1) or HA2A (B46-1) - Body ground	10 kΩ or higher

(b) Check the harness and the connector between the A/F sensor and engine room junction block (A/F sensor heater relay).
(1) Remove the engine room junction block.
(2) Measure the resistance.

Standard resistance (Check for open)

Tester Connections	Specified Conditions
+B (B32-2) - Engine room junction block (A/F sensor heater relay) (1D-5)	Below 1 Ω
+B (B26-2) - Engine room junction block (A/F sensor heater relay) (1D-5)	Below 1 Ω

Standard resistance (Check for short)

Tester Connections	Specified Conditions
+B (B32-2) or Engine room junction block (A/F sensor heater relay) (1D-5) - Body ground	10 kΩ or higher
+B (B26-2) or Engine room junction block (A/F sensor heater relay) (1D-5) - Body ground	10 kΩ or higher

(3) Reconnect the A/F sensor connector.
(4) Reconnect the ECM connector.
(5) Reinstall the engine room junction block.

NG → **REPAIR OR REPLACE HARNESS OR CONNECTOR**

OK →

REPLACE ECM

DTC	P0037	Oxygen Sensor Heater Control Circuit Low (Bank 1 Sensor 2)

DTC	P0038	Oxygen Sensor Heater Control Circuit High (Bank 1 Sensor 2)

DTC	P0057	Oxygen Sensor Heater Control Circuit Low (Bank 2 Sensor 2)

DTC	P0058	Oxygen Sensor Heater Control Circuit High (Bank 2 Sensor 2)

ES

HINT:
Sensor 2 refers to the sensor mounted behind the Three-Way Catalytic Converter (TWC) and located furthest from the engine assembly.

DESCRIPTION

Refer to DTC P0136 (See page ES-152).
HINT:

- When any of these DTCs are set, the ECM enters fail-safe mode. The ECM turns off the Heated Oxygen (HO2) sensor heater in fail-safe mode. Fail-safe mode continues until the ignition switch is turned off.
- The ECM provides a pulse width modulated control circuit to adjust the current through the heater. The HO2 sensor heater circuit uses a relay on the B+ side of the circuit.

Reference (System Diagram of Bank 1 Sensor 2):

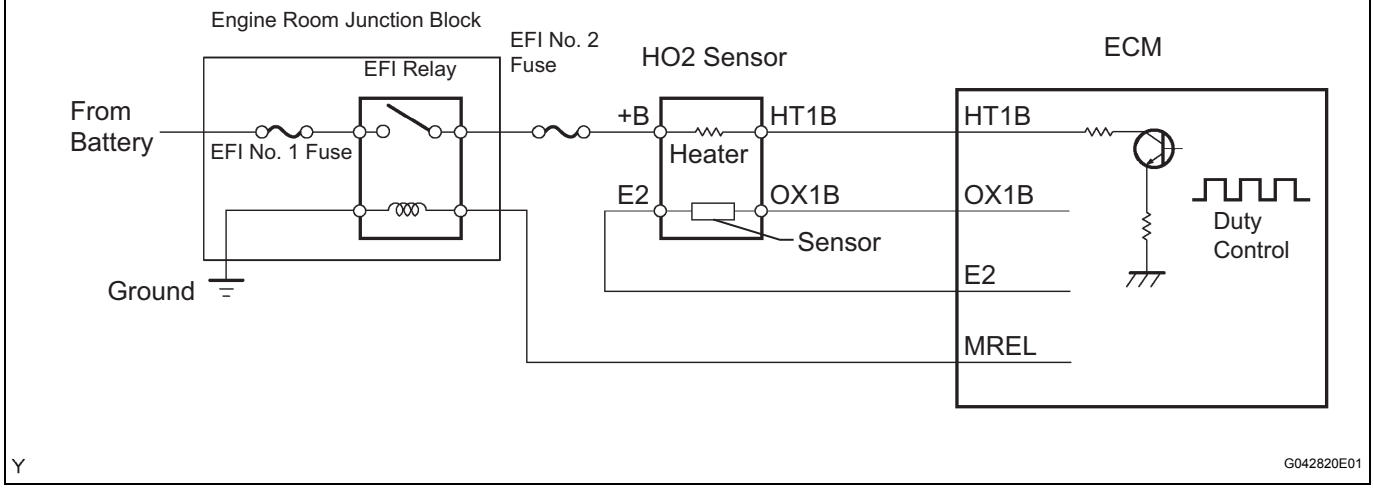

DTC No.	DTC Detection Conditions	Trouble Areas
P0037 P0057	Heated Oxygen (HO2) sensor heater current is less than 0.3 A (1 trip detection logic)	• Open in HO2 sensor heater circuit • HO2 sensor heater • EFI relay • ECM
P0038 P0058	Heated Oxygen (HO2) sensor heater current is more than 2 A (1 trip detection logic)	• Open in HO2 sensor heater circuit • HO2 sensor heater • EFI relay • ECM

HINT:
- Bank 1 refers to the bank that includes cylinder No. 1.
- Bank 2 refers to the bank that does not include cylinder No. 1.
- Sensor 1 refers to the sensor closest to the engine assembly.
- Sensor 2 refers to the sensor furthest away from the engine assembly.

MONITOR DESCRIPTION

The sensing portion of the Heated Oxygen (HO2) sensor has a zirconia element which is used to detect the oxygen concentration in the exhaust gas. If the zirconia element is at the appropriate temperature, and the difference between the oxygen concentrations surrounding the inside and outside surfaces of the sensor is large, the zirconia element generates voltage signals. In order to increase the oxygen concentration detecting capacity of the zirconia element, the ECM supplements the heat from the exhaust with heat from a heating element inside the sensor. When the current in the sensor heater is outside the standard operating range, the ECM interprets this as a malfunction in the sensor heater and sets a DTC.

ES

Example:

The ECM sets DTC P0038 or P0058 when the current in the HO2 sensor heater is more than 2 A. Conversely, when the heater current is less than 0.3 A, DTC P0037 or P0057 is set.

MONITOR STRATEGY

Related DTCs	P0037: Heated oxygen sensor heater (bank 1) open/short (Low electrical current) P0038: Heated oxygen sensor heater (bank 1) open/short (High electrical current) P0057: Heated oxygen sensor heater (bank 2) open/short (Low electrical current) P0058: Heated oxygen sensor heater (bank 2) open/short (High electrical current)
Required Sensors / Components (Main)	Heated oxygen sensor heater (bank 1 and 2)
Required Sensors / Components (Related)	Vehicle speed sensor
Frequency of Operation	Continuous
Duration	P0037 and P0057: 0.5 seconds P0038 and P0058: 0.3 seconds
MIL Operation	Immediate
Sequence of Operation	None

TYPICAL ENABLING CONDITIONS

All:

Monitor runs whenever following DTCs not present	None

P0037 and P0057:

Battery voltage	10.5 V or more
Engine	Running
Starter	OFF
All heater is turned OFF and intrusive heating is operated when the following conditions are met	(a) and (b)
(a) Heater	ON
(b) Heater current	Less than 0.3 A

P0038 and P0058 Case 1:

Battery voltage	10.5 V or more
Engine	Running
Starter	OFF
Intrusive heating	Not operating

P0038 and P0058 Case 2:

Battery voltage	10.5 V or more
All heater is turned OFF and intrusive heating is operated when the following conditions are met	(a) and (b)

(a) Heater	ON
(b) Heater current	More than 2 A

TYPICAL MALFUNCTION THRESHOLDS

P0037 and P0057:

Heated oxygen sensor heater current during intrusive heating	Less than 0.3 A

P0038 and P0058 Case 1:

Heated oxygen sensor heater current	More than 2 A

P0038 and P0058 Case 2:

Heated oxygen sensor heater current during intrusive heating	2 A or more

COMPONENT OPERATING RANGE

Heated Oxygen (HO2) sensor heater current	0.4 to 1 A (when engine idles, HO2 sensor warmed up and battery voltage 11 to 14 V)

MONITOR RESULT

Refer to Checking Monitor Status for detailed information (See page ES-25).

Heated oxygen sensor heater:

MID	TID	Scaling	Description of Test Value	Minimum Test Limit	Maximum Test Limit
$42	$90	Multiply by 0.001 [A]	Maximum sensor heater current	Minimum test limit	Maximum test limit

WIRING DIAGRAM

Refer to DTC P0136 (See page ES-159).

INSPECTION PROCEDURE

HINT:

- If other DTCs relating to different systems that have terminal E2 as the ground terminal are output simultaneously, terminal E2 may have an open circuit.
- Read freeze frame data using the intelligent tester. The ECM records vehicle and driving condition information as freeze frame data the moment a DTC is stored. When troubleshooting, freeze frame data can be helpful in determining whether the vehicle was running or stopped, whether the engine was warmed up or not, whether the air/fuel ratio was lean or rich, as well as other data recorded at the time of a malfunction.

1	INSPECT HEATED OXYGEN SENSOR (HEATER RESISTANCE)

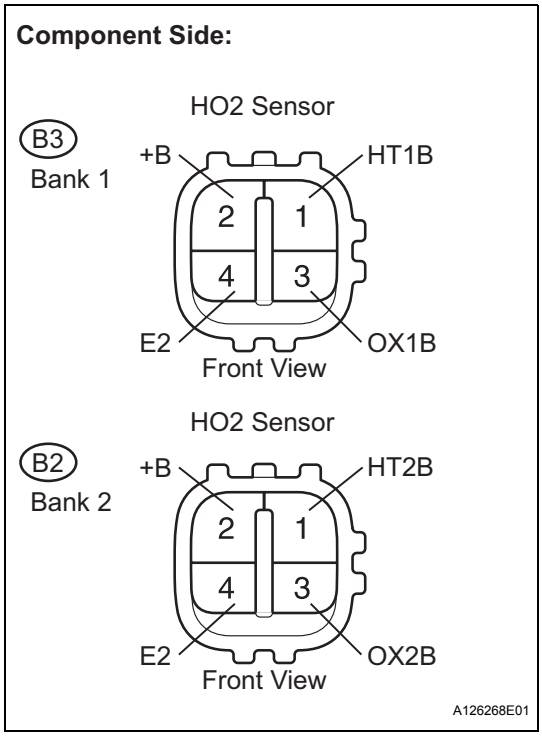

(a) Disconnect the B3 or B2 Heated Oxygen (HO2) sensor connector.
(b) Measure the resistance between the terminals of the HO2 sensor connector.
Standard resistance:
Bank 1

Tester Connections	Specified Conditions
HA1B (1) - +B (2)	11 to 16 Ω at 20°C (68°F)
HA1B (1) - E2 (4)	10 kΩ or higher

Bank 2

Tester Connections	Specified Conditions
HA2B (1) - +B (2)	11 to 16 Ω at 20°C (68°F)
HA2B (1) - E2 (4)	10 kΩ or higher

(c) Reconnect the HO2 sensor connector.

NG → **REPLACE HEATED OXYGEN SENSOR**

OK

2	INSPECT ENGINE ROOM JUNCTION BLOCK ASSEMBLY (EFI RELAY)

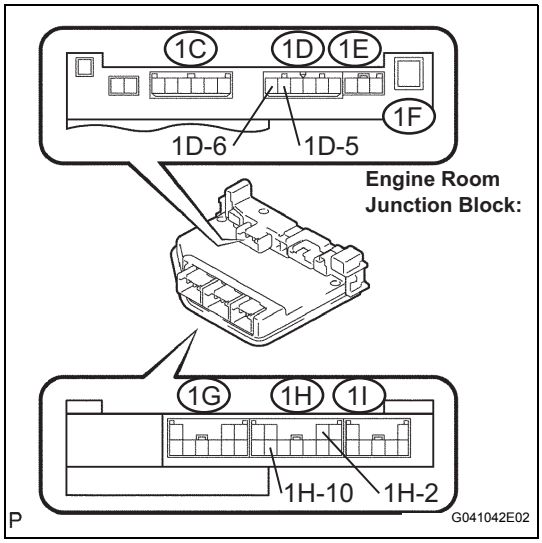

(a) Remove the engine room junction block.
(b) Measure the EFI relay heater relay resistance.
Standard resistance

Tester Connections	Specified Conditions
1D-5 - 1D-6	10 kΩ or higher
1D-5 - 1D-6	Below 1 Ω (when battery voltage applied to terminals 1H-10 and 1H-2)

(c) Reinstall the engine room junction block.

NG → **REPLACE ENGINE ROOM JUNCTION BLOCK ASSEMBLY**

OK

3	INSPECT ECM (HT1B OR HT2B VOLTAGE)

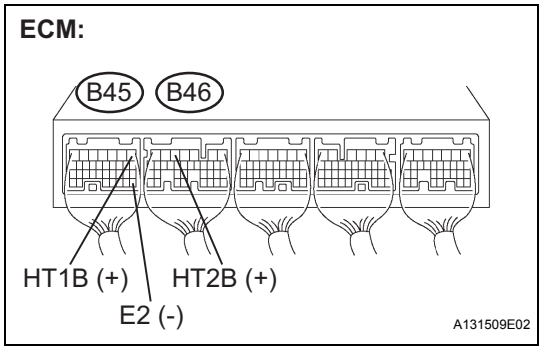

(a) Turn the ignition switch on (IG).
(b) Measure the voltage between the terminals of the B45 and B46 ECM connector.

Standard voltage

Tester Connections	Specified Conditions
HA1B (B45-1) - E2 (B45-28)	9 to 14 V
HA2B (B46-5) - E2 (B45-28)	9 to 14 V

HINT:
- The HT1B means the heated oxygen sensor bank 1 sensor 2.
- The HT2B means the heated oxygen sensor bank 2 sensor 2.

ES

OK → REPLACE ECM

NG

4	CHECK HARNESS AND CONNECTOR (HEATED OXYGEN SENSOR - ECM, HEATED OXYGEN SENSOR - EFI RELAY)

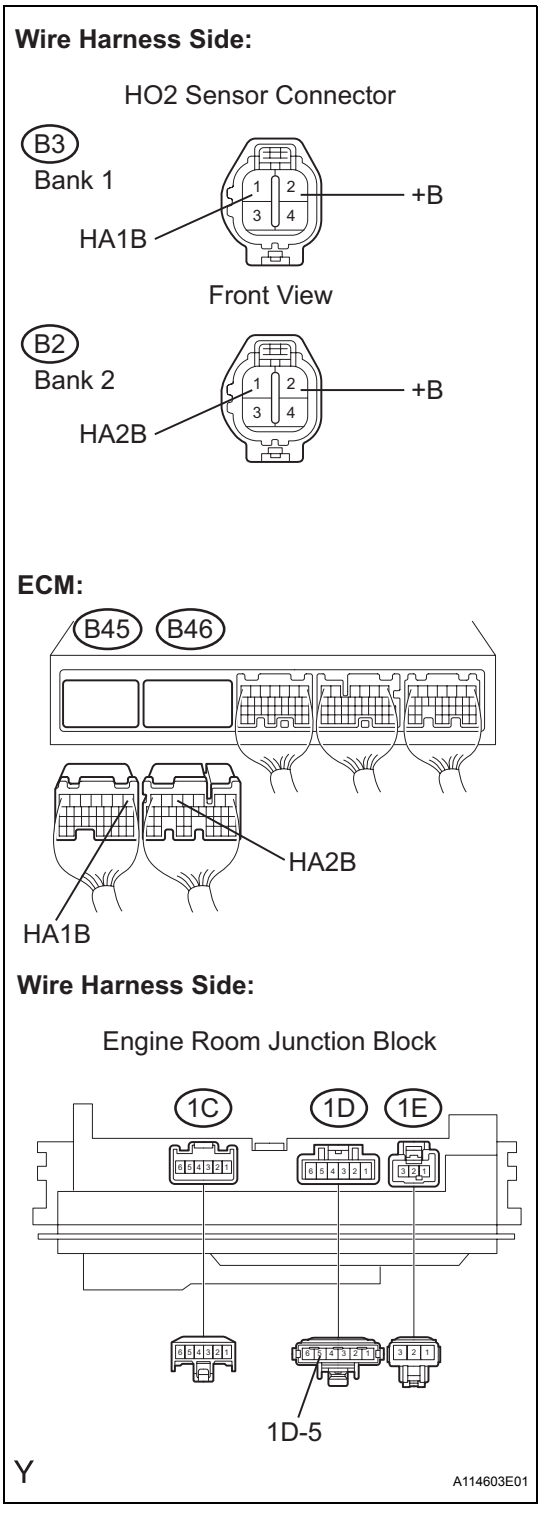

(a) Check the harness and the connector between the ECM and the HO2 sensor.
  (1) Disconnect the B2 or B3 HO2 sensor connector.
  (2) Disconnect the B45 or B46 ECM connector.
  (3) Measure the resistance.
  Standard resistance (Check for open)

Tester Connections	Specified Conditions
HA1B (B3-1) - HA1B (B45-1)	Below 1 Ω
HA2B (B2-1) - HA2B (B46-5)	Below 1 Ω

Standard resistance (Check for short)

Tester Connections	Specified Conditions
HA1B (B3-1) or HA1B (B45-1) - Body ground	10 kΩ or higher
HA2B (B2-1) or HA2B (B46-5) - Body ground	10 kΩ or higher

(b) Check the harness and the connector between the HO2 sensor and engine room junction block (EFI relay).
  (1) Inspect the EFI No. 2 fuse
    • Remove the EFI No. 2 fuse from engine room junction block.
    • Check the EFI No. 2 fuse resistance.
    Standard resistance:
    Below 1 Ω
  (2) Measure the resistance.
    • Remove the engine room junction block.
    Standard resistance (Check for open):

Tester Connections	Specified Conditions
+B (B3-2) - engine room junction block (EFI relay) (1D-5)	Below 1 Ω
+B (B2-2) - engine room junction block (EFI relay) (1D-5)	Below 1 Ω

Standard resistance (Check for short):

Tester Connections	Specified Conditions
+B (B3-2) or engine room junction block (EFI relay) (1D-5) - Body ground	10 kΩ or higher
+B (B2-2) or engine room junction block (EFI relay) (1D-5) - Body ground	10 kΩ or higher

  (3) Reconnect the HO2 sensor connector.
  (4) Reconnect the ECM connector.
  (5) Reinstall the engine room junction block.

NG → **REPAIR OR REPLACE HARNESS OR CONNECTOR**

OK

REPLACE ECM

DTC	P0100	Mass or Volume Air Flow Circuit

DTC	P0102	Mass or Volume Air Flow Circuit Low Input

DTC	P0103	Mass or Volume Air Flow Circuit High Input

DESCRIPTION

The Mass Air Flow (MAF) meter is a sensor that measures the amount of air flowing through the throttle valve. The ECM uses this information to determine the fuel injection time and to provide appropriate air-fuel ratio. Inside the MAF meter, there is a heated platinum wire which is exposed to the flow of intake air. By applying a specific electrical current to the wire, the ECM heats it to a specific temperature. The flow of incoming air cools both the wire and an internal thermistor, changing their resistance. To maintain a constant current value, the ECM varies the voltage applied to these components in the MAF meter. The voltage level is proportional to the air flow through the sensor, and the ECM uses it to calculate the intake air volume.

The circuit is constructed so that the platinum hot wire and the temperature sensor provide a bridge circuit, and the power transistor is controlled so that the potentials of A and B remain equal to maintain the predetermined temperature.

HINT:

When any of these DTCs are set, the ECM enters fail-safe mode. During fail-safe mode, the ignition timing is calculated by the ECM, according to the engine RPM and throttle valve position. Fail-safe mode continues until a pass condition is detected.

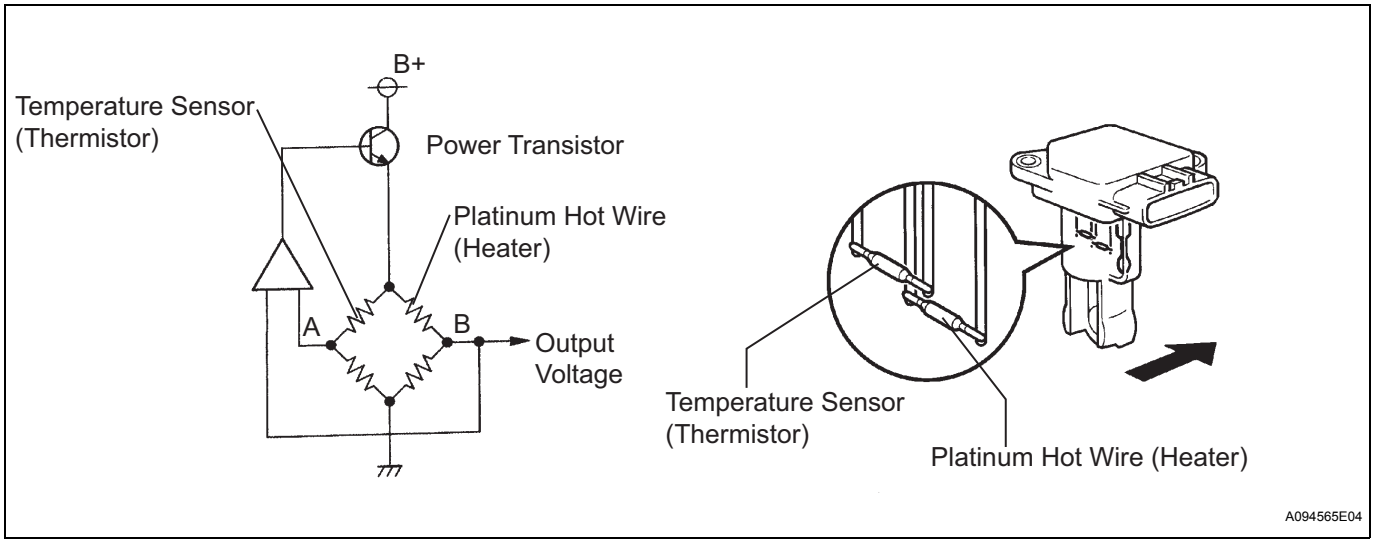

DTC No.	DTC Detection Conditions	Trouble Areas
P0100	Open or short in Mass Air Flow (MAF) meter circuit for 3 seconds	• Open or short in MAF meter circuit • MAF meter • ECM
P0102	Open in Mass Air Flow (MAF) meter circuit for 3 seconds	• Open in MAF meter circuit • Short in ground circuit • MAF meter • ECM
P0103	Short in Mass Air Flow (MAF) meter circuit for 3 seconds	• Short in MAF meter circuit (+B circuit) • MAF meter • ECM

HINT:

When any of these DTCs are set, check the air-flow rate by selecting the following menu items on an intelligent tester: DIAGNOSIS / ENHANCED OBD II / DATA LIST / PRIMARY / MAF.

Mass Air Flow Rate (gm/s)	Malfunctions
Approximately 0.0	• Open in Mass Air Flow (MAF) meter power source circuit • Open or short in VG circuit
271.0 or more	Open in EVG circuit

MONITOR DESCRIPTION

If there is a defect in the MAF meter or an open or short circuit, the voltage level deviates from the normal operating range. The ECM interprets this deviation as a malfunction in the MAF meter and sets a DTC.

Example:

When the sensor voltage output remains less than 0.2 V, or more than 4.9 V, for more than 3 seconds, the ECM sets a DTC.

If the malfunction is not repaired successfully, a DTC is set 3 seconds after the engine is next started.

ES

MONITOR STRATEGY

Related DTCs	P0100: Mass air flow meter range check (Fluctuating) P0102: Mass air flow meter range check (Low voltage) P0103: Mass air flow meter range check (High voltage)
Required Sensors / Components (Main)	MAF meter
Required Sensors / Components (Related)	Crankshaft position sensor
Frequency of Operation	Continuous
Duration	3 seconds
MIL Operation	Immediate: Engine RPM less than 4,000 rpm 2 driving cycles: Engine RPM 4,000 rpm or more
Sequence of Operation	None

TYPICAL ENABLING CONDITIONS

The monitor will run whenever these DTCs are not present	None

TYPICAL MALFUNCTION THRESHOLDS

P0100:

Mass air flow meter voltage	Less than 0.2 V, or more than 4.9 V

P0102:

Mass air flow meter voltage	Less than 0.2 V

P0103:

Mass air flow meter voltage	More than 4.9 V

COMPONENT OPERATING RANGE

Mass air flow meter voltage	Between 0.4 V and 2.2 V

WIRING DIAGRAM

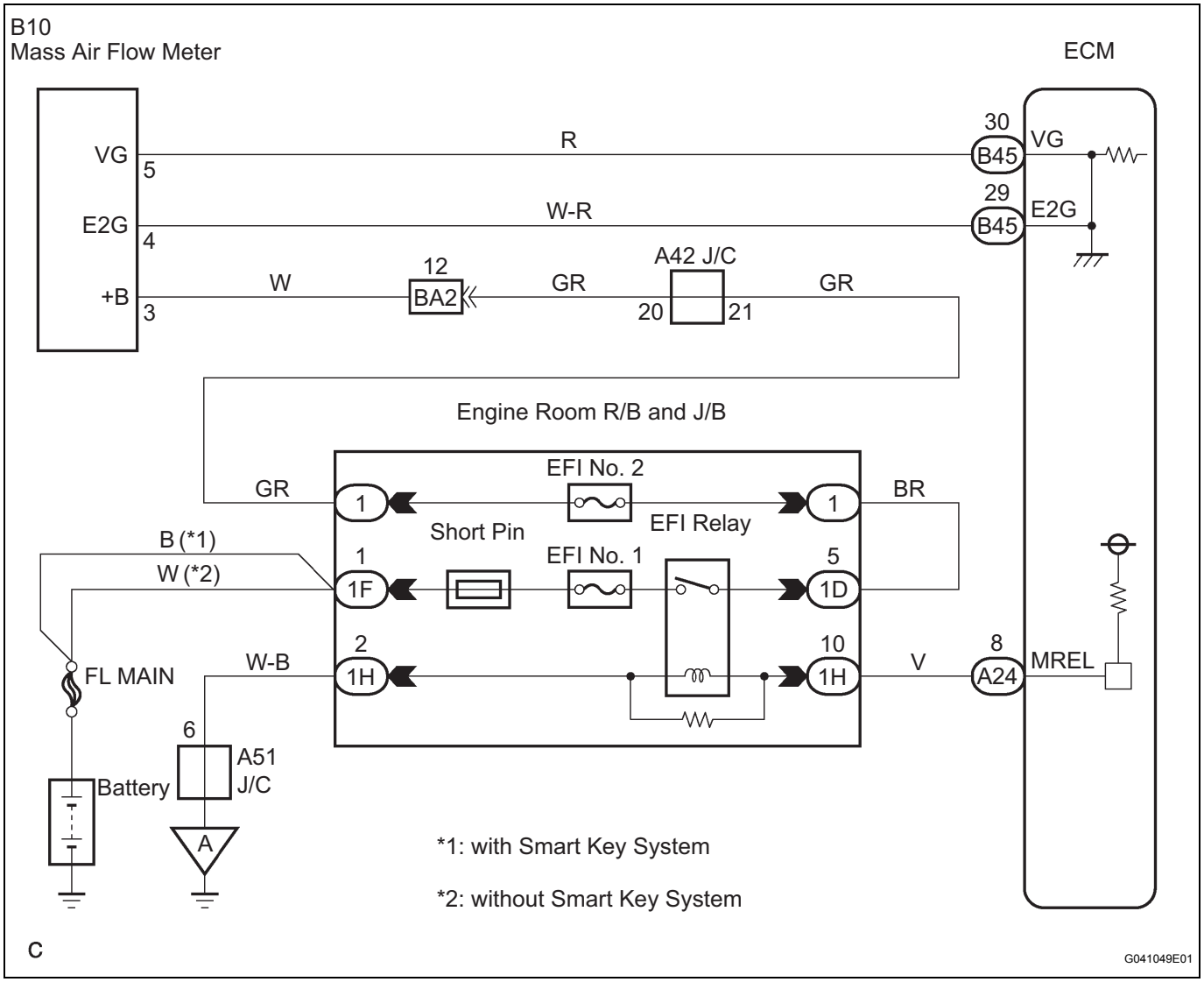

INSPECTION PROCEDURE

HINT:

Read freeze frame data using the intelligent tester. The ECM records vehicle and driving condition information as freeze frame data the moment a DTC is stored. When troubleshooting, freeze frame data can be helpful in determining whether the vehicle was running or stopped, whether the engine was warmed up or not, whether the air/fuel ratio was lean or rich, as well as other data recorded at the time of a malfunction.

1	**READ VALUE OF INTELLIGENT TESTER (MASS AIR FLOW RATE)**

(a) Connect the intelligent tester to the DLC3.
(b) Start the engine.
(c) Turn the tester on.
(d) Select the following menu items: DIAGNOSIS / ENHANCED OBD II / DATA LIST / PRIMARY / MAF.
(e) Read the values displayed on the tester.

Result

Mass Air Flow Rate (gm/s)	Proceed to
0.0	A
271.0 or more	B
Between 1.0 and 270.0 (*1)	C

*1: The value must be changed when the throttle valve is open or closed.

B → Go to step 6

C → CHECK FOR INTERMITTENT PROBLEMS

ES

A

2 INSPECT MASS AIR FLOW METER (POWER SOURCE VOLTAGE)

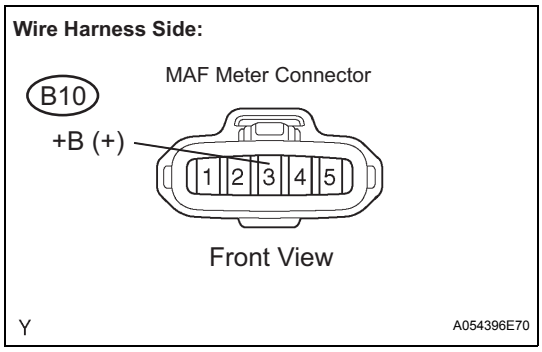

(a) Disconnect the B10 Mass Air Flow (MAF) meter connector.
(b) Turn the ignition switch on (IG).
(c) Measure the voltage between the terminal of the wire harness side connector and body ground.
Standard voltage

Tester Connections	Specified Conditions
+B (B10-3) - Body ground	9 to 14 V

(d) Reconnect the MAF meter connector.

NG → Go to step 5

OK

3 INSPECT ECM (VG VOLTAGE)

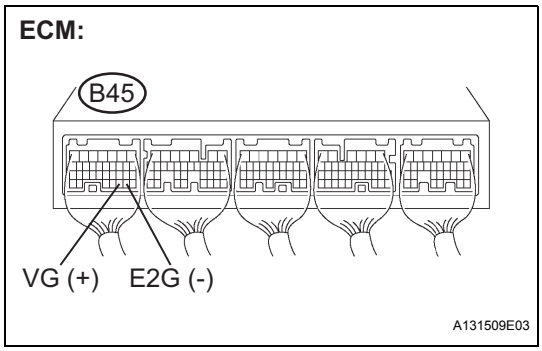

(a) Start the engine.
(b) Measure the voltage between the terminals of the B45 ECM connector.
HINT:
The transmission gear selector lever should be in the P or N position and the A/C switch should be turned off.
Standard voltage

Tester Connections	Conditions	Specified Conditions
VG (B45-30) - E2G (B45-29)	Engine idling	0.5 to 3.0 V

OK → REPLACE ECM

NG

4	CHECK HARNESS AND CONNECTOR (MASS AIR FLOW METER - ECM)

Wire Harness Side:

MAF Meter Connector

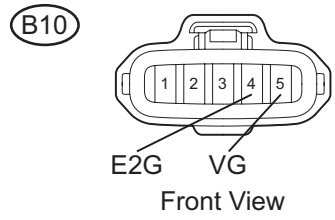

ECM:

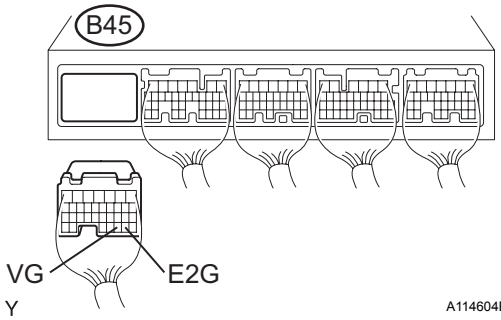

(a) Disconnect the B10 MAF meter connector.
(b) Disconnect the B45 ECM connector.
(c) Measure the resistance.

Standard resistance (Check for open)

Tester Connections	Specified Conditions
VG (B10-5) - VG (B45-30)	Below 1 Ω
E2G (B10-4) - E2G (B45-29)	Below 1 Ω

Standard resistance (Check for short)

Tester Connections	Specified Conditions
VG (B10-5) or VG (B45-30) - Body ground	10 kΩ or higher

(d) Reconnect the MAF meter connector.
(e) Reconnect the ECM connector.

NG → **REPAIR OR REPLACE HARNESS OR CONNECTOR**

OK

REPLACE MASS AIR FLOW METER

ES

5	CHECK HARNESS AND CONNECTOR (MASS AIR FLOW METER - EFI RELAY)

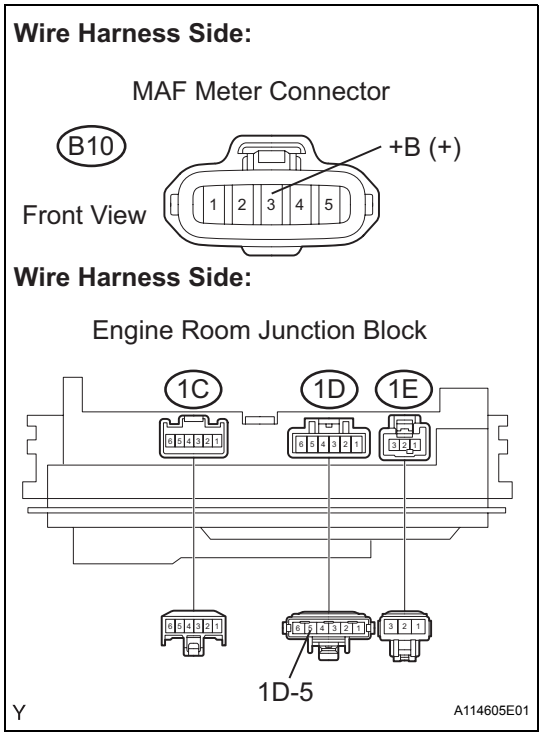

(a) Inspect the EFI No. 2 fuse.
  (1) Remove the EFI No. 2 fuse from the engine room junction block.
  (2) Measure the EFI No. 2 fuse resistance.
    Standard::
    Below 1 Ω
  (3) Reinstall the EFI No. 2 fuse.
(b) Disconnect the B10 MAF meter connector.
(c) Remove the engine room junction block (EFI relay).
(d) Measure the resistance.

Standard resistance (Check for open)

Tester Connections	Specified Conditions
+B (B10-3) - Engine room junction block (EFI relay) (1D-5)	Below 1 Ω

Standard resistance (Check for short)

Tester Connections	Specified Conditions
+B (B10-3) or Engine room junction block (EFI relay) (1D-5) - Body ground	10 kΩ or higher

(e) Reconnect the MAF meter connector.
(f) Reinstall the EFI relay.

NG → **REPAIR OR REPLACE HARNESS OR CONNECTOR**

OK

CHECK ECM POWER SOURCE CIRCUIT

6	INSPECT ECM (SENSOR GROUND)

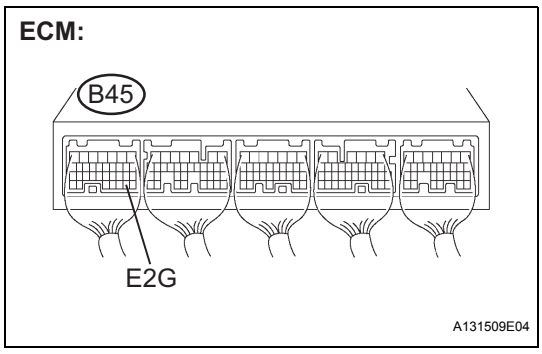

(a) Check the resistance.
Standard resistance

Tester Connections	Specified Conditions
E2G (B45-29) - Body ground	Below 1 Ω

NG → **REPLACE ECM**

OK

7	CHECK HARNESS AND CONNECTOR (MASS AIR FLOW METER - ECM)

Wire Harness Side:

MAF Meter Connector

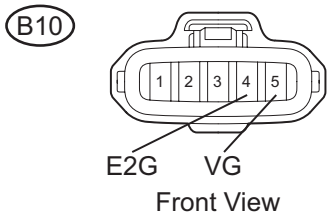

Front View

ECM:

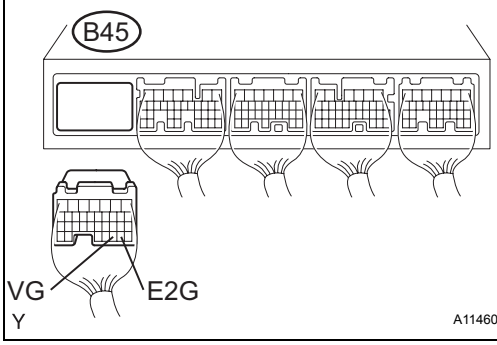

(a) Disconnect the B10 MAF meter connector.
(b) Disconnect the B45 ECM connector.
(c) Measure the resistance.

Standard resistance (Check for open)

Tester Connections	Specified Conditions
VG (B10-5) - VG (B45-30)	Below 1 Ω
E2G (B10-4) - E2G (B45-29)	Below 1 Ω

Standard resistance (Check for short)

Tester Connections	Specified Conditions
VG (B10-5) or VG (B45-30) - Body ground	10 kΩ or higher

(d) Reconnect the MAF meter connector.
(e) Reconnect the ECM connector.

NG → **REPAIR OR REPLACE HARNESS OR CONNECTOR**

OK

REPLACE MASS AIR FLOW METER

ES

DTC	P0101	Mass or Volume Air Flow Circuit Range / Performance Problem

DESCRIPTION

Refer to DTC P0100 (See page ES-113).

DTC No.	DTC Detection Conditions	Trouble Areas
P0101	1. High voltage: Conditions (a), (b) and (c) continue for more than 10 seconds (2 trip detection logic): (a) Engine speed is less than 2,000 rpm (b) Engine coolant temperature is 70°C (158°F) or higher (c) Voltage output of Mass Air Flow (MAF) meter is more than 2.2 V (varies with Throttle Position [TP] sensor voltage) 2. Low voltage: Conditions (a) and (b) continue for more than 10 seconds (2 trip detection logic): (a) Engine speed is more than 300 rpm (b) Voltage output of MAF meter is less than 0.73 V (varies with TP sensor voltage)	MAF meter

ES

MONITOR DESCRIPTION

The MAF meter is a sensor that measures the amount of air flowing through the throttle valve. The ECM uses this information to determine the fuel injection time and to provide an appropriate air-fuel ratio. Inside the MAF meter, there is a heated platinum wire which is exposed to the flow of intake air. By applying a specific electrical current to the wire, the ECM heats it to a specific temperature. The flow of incoming air cools both the wire and an internal thermistor, changing their resistance. To maintain a constant current value, the ECM varies the voltage applied to these components of the MAF meter. The voltage level is proportional to the air flow through the sensor, and the ECM uses it to calculate the intake air volume.

If there is a defect in the sensor, or an open or short in the circuit, the voltage level deviates from the normal operating range. The ECM interprets this deviation as a malfunction in the MAF meter and sets the DTC.

Example:

If the voltage is more than 2.2 V, or less than 0.73 V while idling, the ECM determines that there is a malfunction in the MAF meter and sets the DTC.

MONITOR STRATEGY

Related DTCs	P0101: Mass air flow meter rationality
Required Sensors / Components (Main)	Mass air flow meter
Required Sensors / Components (Related)	Crankshaft position sensor, engine coolant temperature sensor and throttle position sensor
Frequency of Operation	Continuous
Duration	10 seconds
MIL Operation	2 driving cycles
Sequence of Operation	None

TYPICAL ENABLING CONDITIONS

The monitor will run whenever these DTCs are not present	P0115, P0116, P0117, P0118 (ECT Sensor), P0120, P0121, P0122, P0123, P0220, P0222, P0223, P2135 (TP Sensor), P0125 (Insufficient ECT for Closed Loop), P0335 (CKP Sensor), P0340 (VVT Sensor 1, 2)

Mass Air Flow Meter Rationality (High Voltage):

Engine speed	Less than 2,000 rpm
Engine coolant temperature	70°C (158°F) or more

Mass Air Flow Meter Rationality (Low Voltage):

Engine speed	More than 300 rpm
Engine coolant temperature	OFF

TYPICAL MALFUNCTION THRESHOLDS

Mass Air Flow Meter Rationality (High Voltage):

Mass air flow meter voltage	More than 2.2 V (varies with throttle position sensor voltage)

Mass Air Flow Meter Rationality (Low Voltage):

Mass air flow meter voltage	Less than 0.73 V (varies with throttle position sensor voltage)

ES

WIRING DIAGRAM

Refer to DTC P0100 (See page ES-115).

INSPECTION PROCEDURE

HINT:
Read freeze frame data using the intelligent tester. The ECM records vehicle and driving condition information as freeze frame data the moment a DTC is stored. When troubleshooting, freeze frame data can be helpful in determining whether the vehicle was running or stopped, whether the engine was warmed up or not, whether the air/fuel ratio was lean or rich, as well as other data recorded at the time of a malfunction.

1	CHECK ANY OTHER DTCS OUTPUT (IN ADDITION TO DTC P0101)

(a) Connect the intelligent tester to the DLC3.
(b) Turn the ignition switch on (IG).
(c) Turn the tester on.
(d) Select the following menu items: DIAGNOSIS / ENHANCED OBD II / DTC INFO / CURRENT CODES.
(e) Read DTCs.

Result

Display (DTC Output)	Proceed to
P0101 and other DTCs	A
P0101	B

HINT:
If any DTCs other than P0101 are output, troubleshoot those DTCs first.

B → REPLACE MASS AIR FLOW METER

A → GO TO DTC CHART

DTC	P0110	Intake Air Temperature Circuit

DTC	P0112	Intake Air Temperature Circuit Low Input

DTC	P0113	Intake Air Temperature Circuit High Input

DESCRIPTION

The Intake Air Temperature (IAT) sensor, mounted on the Mass Air Flow (MAF) meter, monitors the IAT. The IAT sensor has a built-in thermistor with a resistance that varies according to the temperature of the intake air. When the IAT is low, the resistance of the thermistor increases. When the temperature is high, the resistance drops. These variations in resistance are transmitted to the ECM as voltage changes (see Fig. 1).

ES

The IAT sensor is powered by a 5 V applied from the THA terminal of the ECM, via resistor R. Resistor R and the IAT sensor are connected in series. When the resistance value of the IAT sensor changes, according to changes in the IAT, the voltage at terminal THA also varies. Based on this signal, the ECM increases the fuel injection volume when the engine is cold to improve drivability.

(Figure 1)

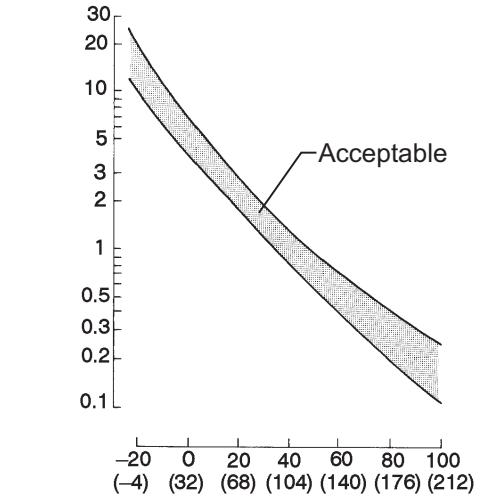

HINT:

When any of DTCs P0110, P0112 and P0113 are set, the ECM enters fail-safe mode. During fail-safe mode, the IAT is estimated to be 20°C (68°F) by the ECM. Fail-safe mode continues until a pass condition is detected.

DTC No.	Proceed to	DTC Detection Conditions	Trouble Area
P0110	Step 1	Open or short in Intake Air Temperature (IAT) sensor circuit for 0.5 seconds (1 trip detection logic)	• Open or short in IAT sensor circuit • IAT sensor (built into MAF meter) • ECM
P0112	Step 4	Short in Intake Air Temperature (IAT) sensor circuit for 0.5 seconds (1 trip detection logic)	• Short in IAT sensor circuit • IAT sensor (built into MAF meter) • ECM

DTC No.	Proceed to	DTC Detection Conditions	Trouble Area
P0113	Step 2	Open in Intake Air Temperature (IAT) sensor circuit for 0.5 seconds (1 trip detection logic)	• Open in IAT sensor circuit • IAT sensor (built into MAF meter) • ECM

HINT:
When any of these DTCs are set, check the IAT by selecting the following menu items on the intelligent tester: DIAGNOSIS / ENHANCED OBD II / DATA LIST / PRIMARY / INTAKE AIR.

Temperature Displayed	Malfunctions
-40°C (-40°F)	Open circuit
140°C (284°F) or higher	Short circuit

ES

MONITOR DESCRIPTION

The ECM monitors the sensor voltage and uses this value to calculate the Intake Air Temperature (IAT). When the sensor output voltage deviates from the normal operating range, the ECM interprets this as a malfunction in the IAT sensor and sets a DTC.

Example:

If the sensor voltage output is -40°C (-40°F) for 0.5 seconds or more, the ECM determines that there is an open in the IAT sensor circuit, and sets DTC P0113. Conversely, if the voltage output is more than 140°C (284°F) for 0.5 seconds or more, the ECM determines that there is a short in the sensor circuit, and sets DTC P0112.

If the malfunction is not repaired successfully, a DTC is set 0.5 seconds after the engine is next started.

MONITOR STRATEGY

Related DTCs	P0110: Intake air temperature sensor open/short (Fluctuating) P0112: Intake air temperature sensor short (Low electrical voltage) P0113: Intake air temperature sensor open (High electrical voltage)
Required Sensors / Components (Main)	Intake Air Temperature (IAT) sensor
Required sensors / Components (Related)	-
Frequency of Operation	Continuous
Duration	0.5 seconds
MIL Operation	Immediate
Sequence of Operation	None

TYPICAL ENABLING CONDITIONS

The monitor will run whenever these DTCs are not present	None

TYPICAL MALFUNCTION THRESHOLDS

P0110:

Intake air temperature sensor voltage	Less than 0.18 V or more than 4.91 V

P0112:

Intake air temperature sensor voltage	Less than 0.18 V [More than 140°C (284°F)]

P0113:

Intake air temperature sensor voltage	More than 4.91 V [Less than -40°C (-40°F)]

COMPONENT OPERATING RANGE

Intake air temperature sensor voltage	0.18 V to 4.91 V [-40 to 140°C (-40 to 284°F)]

WIRING DIAGRAM

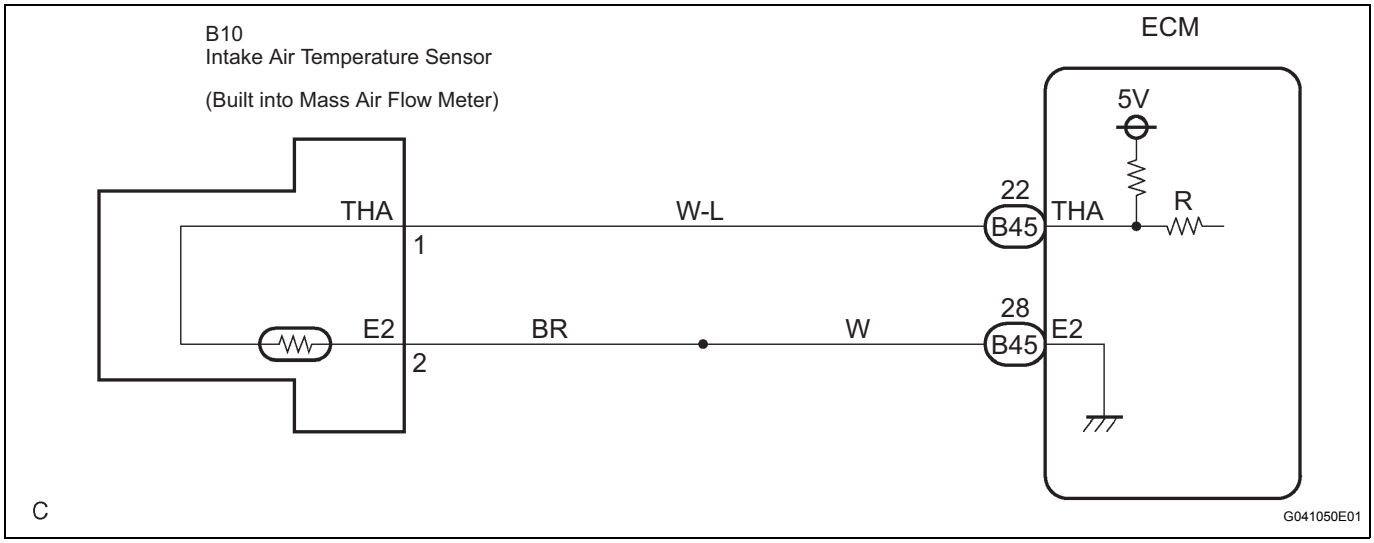

INSPECTION PROCEDURE

HINT:

- If other DTCs relating to different systems that have terminal E2 as the ground terminal are output simultaneously, terminal E2 may have an open circuit.
- Read freeze frame data using the intelligent tester. The ECM records vehicle and driving condition information as freeze frame data the moment a DTC is stored. When troubleshooting, freeze frame data can be helpful in determining whether the vehicle was running or stopped, whether the engine was warmed up or not, whether the air/fuel ratio was lean or rich, as well as other data recorded at the time of a malfunction.

1	READ VALUE OF INTELLIGENT TESTER (INTAKE AIR TEMPERATURE)

(a) Connect the intelligent tester to the DLC3.
(b) Turn the ignition switch on (IG).
(c) Turn the tester on.
(d) Select the following menu items: DIAGNOSIS / ENHANCEDOBD II / DATA LIST / PRIMARY / INTAKE AIR.
(e) Read the value displayed on the tester.
Standard:
Same as actual Intake Air Temperature (IAT).

Result

Temperature Displayed	Proceed to
-40°C (-40°F)	A
140°C (284°F) or higher	B
Same as actual IAT	C

HINT:

- If there is an open circuit, the intelligent tester indicates -40°C (-40°F).

- If there is a short circuit, the intelligent tester indicates140°C (284°F) or higher.

B	Go to step 4
C	CHECK FOR INTERMITTENT PROBLEMS

A

2 READ VALUE OF INTELLIGENT TESTER (CHECK FOR OPEN IN WIRE HARNESS)

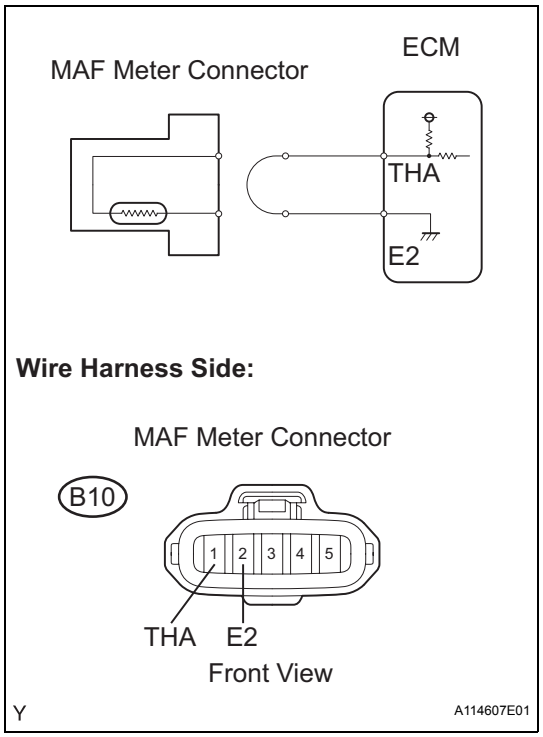

(a) Disconnect the B10 Mass Air Flow (MAF) meter connector.
(b) Connect terminals THA and E2 of the MAF meter wire harness side connector.
(c) Connect the intelligent tester to the DLC3.
(d) Turn the ignition switch on (IG).
(e) Turn the tester on.
(f) Select the following menu items: DIAGNOSIS / ENHANCED OBD II / DATA LIST / PRIMARY / INTAKE AIR.
(g) Read the value displayed on the tester.
Standard:
140°C (284°F) or higher
(h) Reconnect the MAF meter connector.

OK	CONFIRM GOOD CONNECTION TO SENSOR. IF OK, REPLACE MASS AIR FLOW METER

NG

ES

3	READ VALUE OF INTELLIGENT TESTER (CHECK FOR OPEN IN ECM)

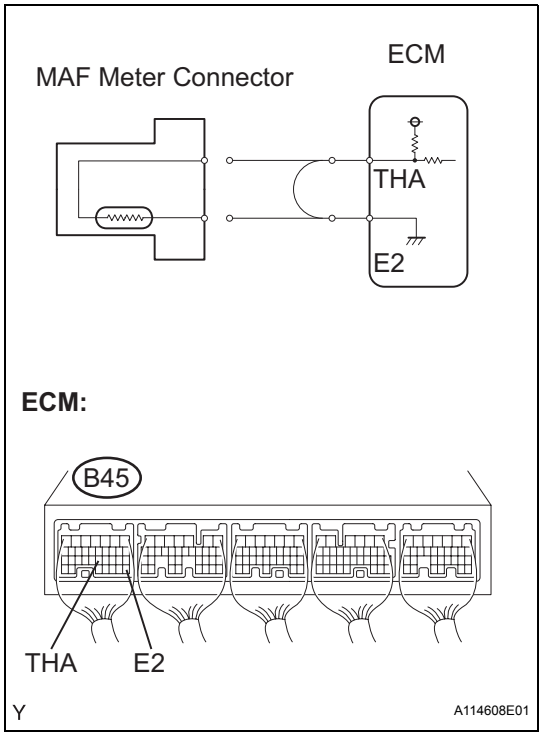

(a) Disconnect the B10 MAF meter connector.
(b) Connect terminals THA and E2 of the B45 ECM connector.
HINT:
Before checking, do visual and contact pressure checks on the ECM connector.
(c) Connect the intelligent tester to the DLC3.
(d) Turn the ignition switch on (IG).
(e) Turn the tester on.
(f) Select the following menu items: DIAGNOSIS / ENHANCED OBD II / DATA LIST / PRIMARY / INTAKE AIR.
(g) Read the value displayed on the tester.
Standard:
140°C (284°F) or higher
(h) Reconnect the MAF meter connector.

OK → **REPAIR OR REPLACE HARNESS OR CONNECTOR**

NG

CONFIRM GOOD CONNECTION TO ECM. IF OK, REPLACE ECM

4	READ VALUE OF INTELLIGENT TESTER (CHECK FOR SHORT IN WIRE HARNESS)

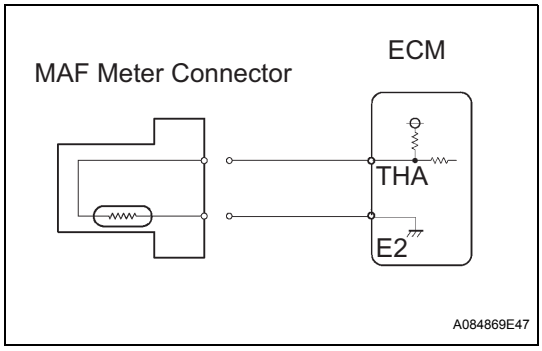

(a) Disconnect the B10 MAF meter connector.
(b) Connect the intelligent tester to the DLC3.
(c) Turn the ignition switch on (IG).
(d) Turn the tester on.
(e) Select the following menu items: DIAGNOSIS / ENHANCED OBD II / DATA LIST / PRIMARY / INTAKE AIR.
(f) Read the value displayed on the tester.
Standard:
-40°C (-40°F)
(g) Reconnect the MAF meter connector.

OK → **CONFIRM GOOD CONNECTION TO SENSOR. IF OK, REPLACE MASS AIR FLOW METER**

NG

5	READ VALUE OF INTELLIGENT TESTER (CHECK FOR SHORT IN ECM)

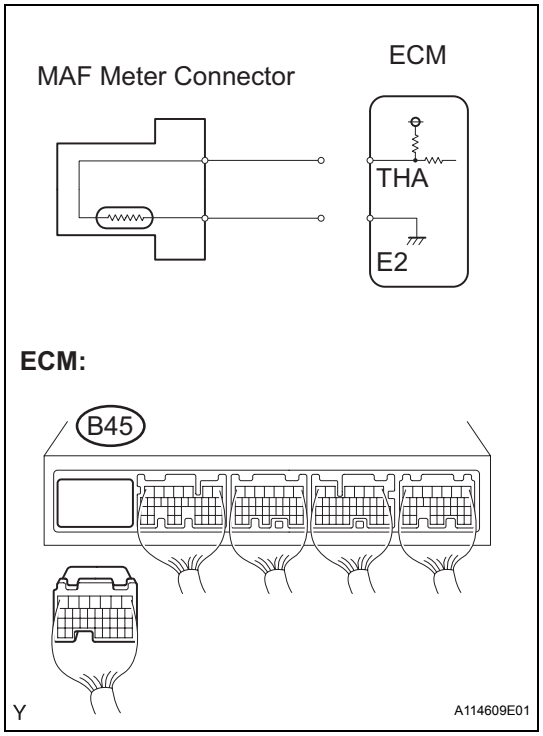

(a) Disconnect the B45 ECM connector.
(b) Connect the intelligent tester to the DLC3.
(c) Turn the ignition switch on (IG).
(d) Turn the tester on.
(e) Select the following menu items: DIAGNOSIS / ENHANCED OBD II / DATA LIST / PRIMARY / INTAKE AIR.
(f) Read the value displayed on the tester.
Standard:
-40°C (-40°F)
(g) Reconnect the ECM connector.

OK → **REPAIR OR REPLACE HARNESS OR CONNECTOR**

NG

REPLACE ECM

ES

DTC	P0115	Engine Coolant Temperature Circuit

DTC	P0117	Engine Coolant Temperature Circuit Low Input

DTC	P0118	Engine Coolant Temperature Circuit High Input

DESCRIPTION

A thermistor is built into the Engine Coolant Temperature (ECT) sensor, of which the resistance value varies according to the ECT.

The structure of the sensor and its connection to the ECM are the same as those of the Intake Air Temperature (IAT) sensor.

HINT:

When any of DTCs P0115, P0117 and P0118 are set, the ECM enters fail-safe mode. During fail-safe mode, the ECT is estimated to be 80°C (176°F) by the ECM. Fail-safe mode continues until a pass condition is detected.

DTC No.	Proceed to	DTC Detection Conditions	Trouble Areas
P0115	Step 1	Open or short in Engine Coolant Temperature (ECT) sensor circuit for 0.5 seconds (1 trip detection logic)	• Open or short in ECT sensor circuit • ECT sensor • ECM
P0117	Step 4	Short in Engine Coolant Temperature (ECT) sensor circuit for 0.5 seconds (1 trip detection logic)	• Short in ECT sensor circuit • ECT sensor • ECM
P0118	Step 2	Open in Engine Coolant Temperature (ECT) sensor circuit for 0.5 seconds (1 trip detection logic)	• Open in ECT sensor circuit • ECT sensor • ECM

HINT:

When any of these DTCs are set, check the ECT by selecting the following menu items on the intelligent tester: DIAGNOSIS / ENHANCED OBD II / DATA LIST / PRIMARY / COOLANT TEMP.

Temperature Displayed	Malfunctions
-40°C (-40°F)	Open circuit
140°C (284°F) or higher	Short circuit

MONITOR DESCRIPTION

The Engine Coolant Temperature (ECT) sensor is used to monitor the ECT. The ECT sensor has a thermistor with a resistance that varies according to the temperature of the engine coolant. When the coolant temperature is low, the resistance in the thermistor increases. When the temperature is high, the resistance drops.

These variations in resistance are reflected in the voltage output from the sensor. The ECM monitors the sensor voltage and uses this value to calculate the ECT. When the sensor output voltage deviates from the normal operating range, the ECM interprets this as a fault in the ECT sensor and sets a DTC.

Example:

If the sensor voltage output is -40°C (-40°F) for 0.5 seconds or more, the ECM determines that there is an open in the ECT sensor circuit, and sets DTC P0118. Conversely, if the voltage output is more than 140°C (284°F) for 0.5 seconds or more, the ECM determines that there is a short in the sensor circuit, and sets DTC P0117.

If the malfunction is not repaired successfully, a DTC is set 0.5 seconds after the engine is next started.

MONITOR STRATEGY

Related DTCs	P0115: Engine coolant temperature sensor open/short (Fluctuating) P0117: Engine coolant temperature sensor short (Low electrical voltage) P0118: Engine coolant temperature sensor open (High electrical voltage)
Required Sensors / Components (Main)	Engine coolant temperature sensor
Required Sensors / Components (Related)	-
Frequency of Operation	Continuous
Duration	0.5 seconds
MIL Operation	Immediate
Sequence of Operation	None

TYPICAL ENABLING CONDITIONS

The monitor will run whenever these DTCs are not present	None

TYPICAL MALFUNCTION THRESHOLDS

P0115:

Engine coolant temperature sensor voltage	Less than 0.14 V or more than 4.91 V

P0117:

Engine coolant temperature sensor voltage	Less than 0.14 V [More than 140°C (284°F)]

P0118:

Engine coolant temperature sensor voltage	More than 4.91 V [Less than -40°C (-40°F)]

COMPONENT OPERATING RANGE

Engine coolant temperature sensor voltage	0.14 V to 4.91 V [-40 to 140°C (-40 to 284°F)]

WIRING DIAGRAM

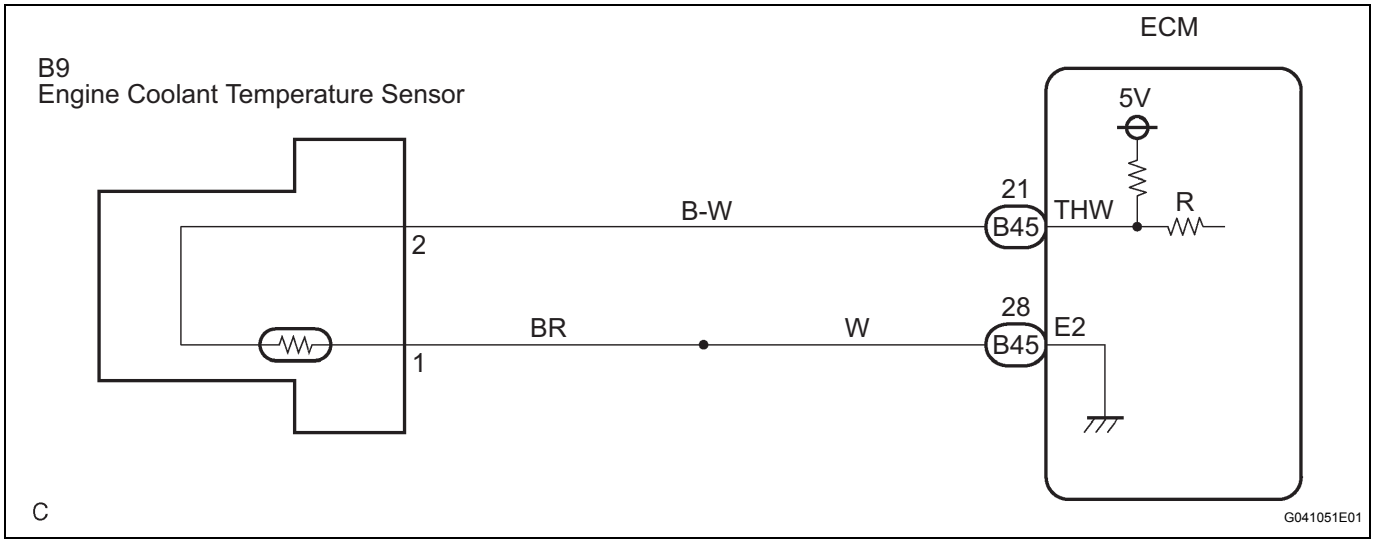

INSPECTION PROCEDURE

HINT:

- If other DTCs relating to different systems that have terminal E2 as the ground terminal are output simultaneously, terminal E2 may have an open circuit.

- Read freeze frame data using the intelligent tester. The ECM records vehicle and driving condition information as freeze frame data the moment a DTC is stored. When troubleshooting, freeze frame data can be helpful in determining whether the vehicle was running or stopped, whether the engine was warmed up or not, whether the air/fuel ratio was lean or rich, as well as other data recorded at the time of a malfunction.

1	READ VALUE OF INTELLIGENT TESTER (ENGINE COOLANT TEMPERATURE)

(a) Connect the intelligent tester to the DLC3.
(b) Turn the ignition switch on (IG).
(c) Turn the tester on.
(d) Select the following menu items: DIAGNOSIS / ENHANCED OBD II / DATA LIST / PRIMARY / COOLANT TEMP.
(e) Read the value displayed on the tester.
Standard:
Between 80°C and 97°C (176°F and 207°F) with warm engine.

Result

Temperature Displayed	Proceed to
-40°C (-40°F)	A
140°C (284°F) or higher	B
Between 80°C and 97°C (176°F and 207°F)	C

HINT:
- If there is an open circuit, the intelligent tester indicates -40°C (-40°F).
- If there is a short circuit, the intelligent tester indicates 140°C (284°F) or higher.

B → **Go to step 4**

C → **CHECK FOR INTERMITTENT PROBLEMS**

A

2	READ VALUE OF INTELLIGENT TESTER (CHECK FOR OPEN IN WIRE HARNESS)

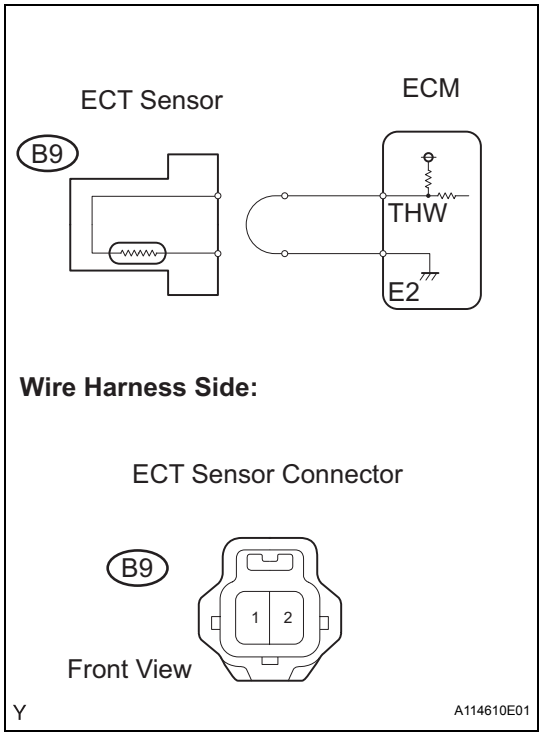

(a) Disconnect the B9 Engine Coolant Temperature (ECT) sensor connector.
(b) Connect terminals 1 and 2 of the ECT sensor connector on the wire harness side.
(c) Connect the intelligent tester to the DLC3.
(d) Turn the ignition switch on (IG).
(e) Turn the tester on.
(f) Select the following menu items: DIAGNOSIS / ENHANCED OBD II / DATA LIST / PRIMARY / COOLANT TEMP.
(g) Read the value displayed on the tester.
Standard:
140°C (284°F) or higher
(h) Reconnect the ECT sensor connector.

OK	CONFIRM GOOD CONNECTION TO SENSOR. IF OK, REPLACE ENGINE COOLANT TEMPERATURE SENSOR

NG

3	READ VALUE OF INTELLIGENT TESTER (CHECK FOR OPEN IN ECM)

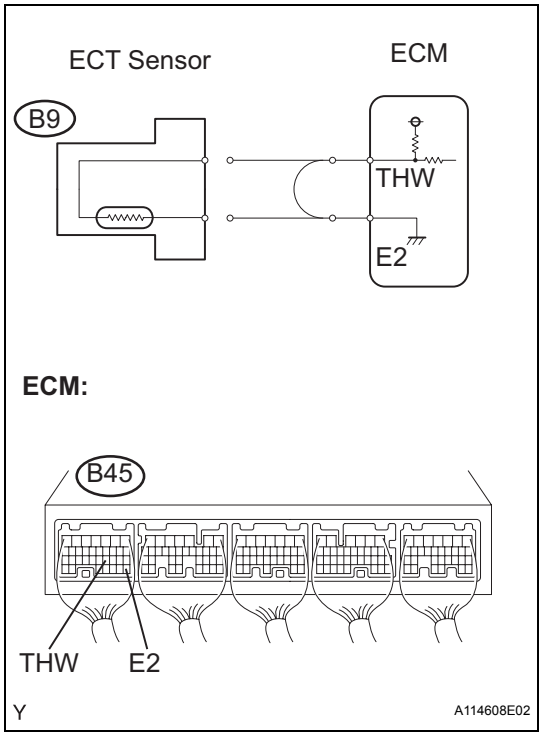

(a) Disconnect the B9 ECT sensor connector.
(b) Connect terminals THW and E2 of the E4 ECM connector.
HINT:
Before checking, do visual and contact pressure checks on the ECM connector.
(c) Connect the intelligent tester to the DLC3.
(d) Turn the ignition switch on (IG).
(e) Turn the tester on.
(f) Select the following menu items: DIAGNOSIS / ENHANCED OBD II / DATA LIST / PRIMARY / COOLANT TEMP.
(g) Read the value displayed on the tester.
Standard:
140°C (284°F) or higher
(h) Reconnect the ECT sensor connector.

OK	REPAIR OR REPLACE HARNESS OR CONNECTOR

ES

NG

CONFIRM GOOD CONNECTION TO ECM. IF OK, REPLACE ECM

4 READ VALUE OF INTELLIGENT TESTER (CHECK FOR SHORT IN WIRE HARNESS)

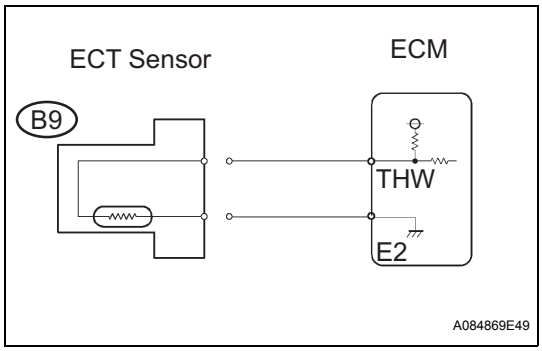

(a) Disconnect the B9 ECT sensor connector.
(b) Connect the intelligent tester to the DLC3.
(c) Turn the ignition switch on (IG).
(d) Turn the tester on.
(e) Select the following menu items: DIAGNOSIS / ENHANCED OBD II / DATA LIST / PRIMARY / COOLANT TEMP.
(f) Read the value displayed on the tester.
Standard:
-40°C (-40°F)
(g) Reconnect the ECT sensor connector.

OK → **REPLACE ENGINE COOLANT TEMPERATURE SENSOR**

NG

5 READ VALUE OF INTELLIGENT TESTER (CHECK FOR SHORT IN ECM)

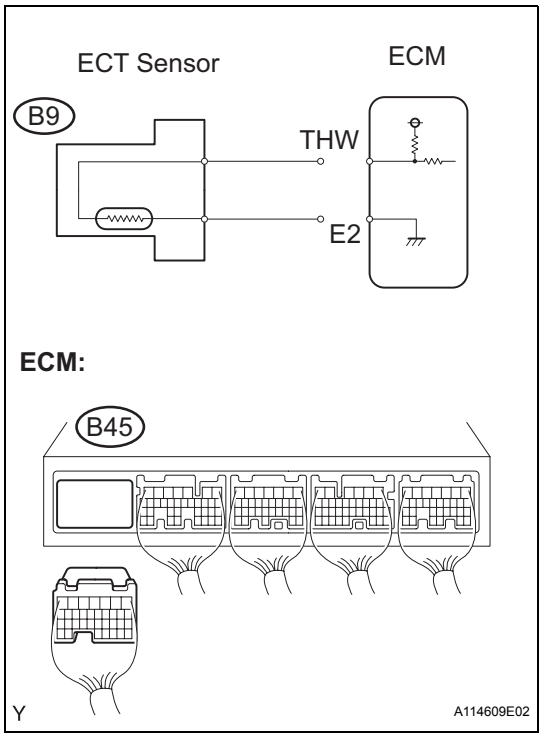

(a) Disconnect the B45 ECM connector.
(b) Connect the intelligent tester to the DLC3.
(c) Turn the ignition switch on (IG).
(d) Turn the tester on.
(e) Select the following menu items: DIAGNOSIS / ENHANCED OBD II / DATA LIST / PRIMARY / COOLANT TEMP.
(f) Read the value displayed on the tester.
Standard:
-40°C (-40°F)
(g) Reconnect the ECM connector.

OK → **REPAIR OR REPLACE HARNESS OR CONNECTOR**

NG

REPLACE ECM

DTC	P0116	Engine Coolant Temperature Circuit Range / Performance Problem

DESCRIPTION

Refer to DTC P0115 (See page ES-128).

DTC No.	DTC Detection Conditions	Trouble Areas
P0116	Case 1: Engine Coolant Temperature (ECT) is between 35°C and 60°C (95°F and 140°F) when engine is started, and conditions (a) and (b) are met (2 trip detection logic): (a) Vehicle driven at varying speeds (accelerated and decelerated) (b) ECT remains within 3°C (5.4°F) of initial ECT Case 2: ECT is more than 60°C (140°F) when engine is started, and conditions (a) and (b) are met (6 trip detection logic): (a) Vehicle driven at varying speeds (accelerated and decelerated) (b) ECT measurements remain within 1°C (1.8°F) of initial ECT on 6 successive occasions	ECT sensor

MONITOR DESCRIPTION

The ECT sensor is used to monitor the ECT. The ECT sensor has a built-in thermistor with a resistance that varies according to the temperature of the engine coolant. When the ECT is low, the resistance of the thermistor increases. When the temperature is high, the resistance drops. These variations in the resistance are reflected in the voltage output from the ECT sensor.

The ECM monitors the sensor voltage and uses this value to calculate the ECT. If the sensor voltage output deviates from the normal operating range, the ECM interprets this deviation as a malfunction in the ECT sensor and sets the DTC.

Examples:

- Upon starting the engine, the ECT is between 35°C and 60°C (95°F and 140°F). If after driving for 250 seconds, the ECT remains within 3°C (5.4°F) of the staring temperature, the DTC is set (2 trip detection logic).
- Upon starting the engine, the ECT is over 60°C (140°F). If after driving for 250 seconds, the ECT remains within 1°C (1.8°F) of the starting temperature, the DTC is set (6 trip detection logic).

MONITOR STRATEGY

Related DTCs	P0116: Engine coolant temperature sensor output stuck at low engine coolant temperature P0116: Engine coolant temperature sensor output stuck at high engine coolant temperature
Required Sensors / Components (Main)	Engine Coolant Temperature (ECT) sensor
Required Sensors / Components (Related)	Crankshaft position sensor, intake air temperature sensor and mass air flow meter
Frequency of Operation	Continuous
Duration	250 seconds or more
MIL Operation	2 driving cycles: ECT sensor output stuck at low engine coolant temperature 6 driving cycles: ECT sensor output stuck at high engine coolant temperature
Sequence of Operation	None

TYPICAL ENABLING CONDITIONS

Engine Coolant Temperature Sensor Output Stuck at Low Engine Coolant Temperature:

The monitor will run whenever these DTCs are not present	P0100, P0101, P0102, P0103 (MAF Sensor)
Cumulative idle off period	250 seconds or more
Speed increase by 18.6 mph (30 km/h) or more	10 times or more
Engine coolant temperature at engine start	35° to 60°C (95° to 140°F)
Intake air temperature at engine start	-6.7°C (20°F) or more

Engine Coolant Temperature Sensor Output Stuck at High Engine Coolant Temperature:

The monitor will run whenever these DTCs are not present	P0100, P0101, P0102, P0103 (MAF Sensor)
Engine coolant temperature at engine start	60°C (140°F) or more
Intake air temperature at engine start	-6.7°C (20°F) or more
Stop and go*1	Once or more
Steady driving and stop*2	Once or more
Engine running time after engine start	0.3 seconds or more

ES

*1: The vehicle is stopped for 20 seconds or more and accelerated to more than 43.5 mph (70 km/h) within 40 seconds.

*2: Following these steps: 1) the vehicle is driven at 40.4 mph (65 km/h) or more for 30 seconds or more and the vehicle speed reaches 43.5 mph (70 km/h); 2) the vehicle is decelerated from 40.4 mph (65 km/h) to 1.86 mph (3 km/h) or less within 35 seconds; and 3) the vehicle is stopped for 10 seconds.

TYPICAL MALFUNCTION THRESHOLDS

Engine Coolant Temperature Sensor Output Stuck at Low Engine Coolant Temperature:

Variation of engine coolant temperature	Less than 3°C (5.4°F)

Engine Coolant Temperature Sensor Output Stuck at High Engine Coolant Temperature:

Variation of engine coolant temperature	1°C (1.8°F) or less

COMPONENT OPERATING RANGE

Engine coolant temperature	Varies with actual engine coolant temperature

INSPECTION PROCEDURE

HINT:

- If any of DTCs P0115, P0117, P0118 or P0125 are set simultaneously with DTC P0116, the ECT sensor may have an open or a short circuit. Troubleshoot those DTCs first.
- Read freeze frame data using the intelligent tester. The ECM records vehicle and driving condition information as freeze frame data the moment a DTC is stored. When troubleshooting, freeze frame data can be helpful in determining whether the vehicle was running or stopped, whether the engine was warmed up or not, whether the air/fuel ratio was lean or rich, as well as other data recorded at the time of a malfunction.

1	**REPLACE ENGINE COOLANT TEMPERATURE SENSOR**

(a) Replace the engine coolant temperature sensor.

NEXT

END

DTC	P0120	Throttle / Pedal Position Sensor / Switch "A" Circuit
DTC	P0122	Throttle / Pedal Position Sensor / Switch "A" Circuit Low Input
DTC	P0123	Throttle / Pedal Position Sensor / Switch "A" Circuit High Input
DTC	P0220	Throttle / Pedal Position Sensor / Switch "B" Circuit
DTC	P0222	Throttle / Pedal Position Sensor / Switch "B" Circuit Low Input
DTC	P0223	Throttle / Pedal Position Sensor / Switch "B" Circuit High Input
DTC	P2135	Throttle / Pedal Position Sensor / Switch "A" / "B" Voltage Correlation

HINT:
These DTCs relate to the Throttle Position (TP) sensor.

DESCRIPTION

HINT:
This ETCS (Electronic Throttle Control System) does not use a throttle cable.
The Accelerator Pedal Position (APP) sensor is integrated with the accelerator pedal bracket and has 2 sensor circuits: VPA (main) and VPA2 (sub). This sensor is a non-contact type, and uses Hall-effect elements, in order to yield accurate signals, even in extreme driving conditions, such as at high speeds as well as very low speeds. The voltage, which is applied to terminals VPA and VPA2 of the ECM, varies between 0 V and 5 V in proportion to the operating angle of the accelerator pedal (throttle valve). A signal from VPA indicates the actual accelerator pedal opening angle (throttle valve opening angle) and is used for engine control. A signal from VPA2 conveys the status of the VPA circuit and is used to check the APP sensor itself.
The ECM monitors the actual accelerator pedal opening angle (throttle valve opening angle) through the signals from VPA and VPA2, and controls the throttle actuator according to these signals.

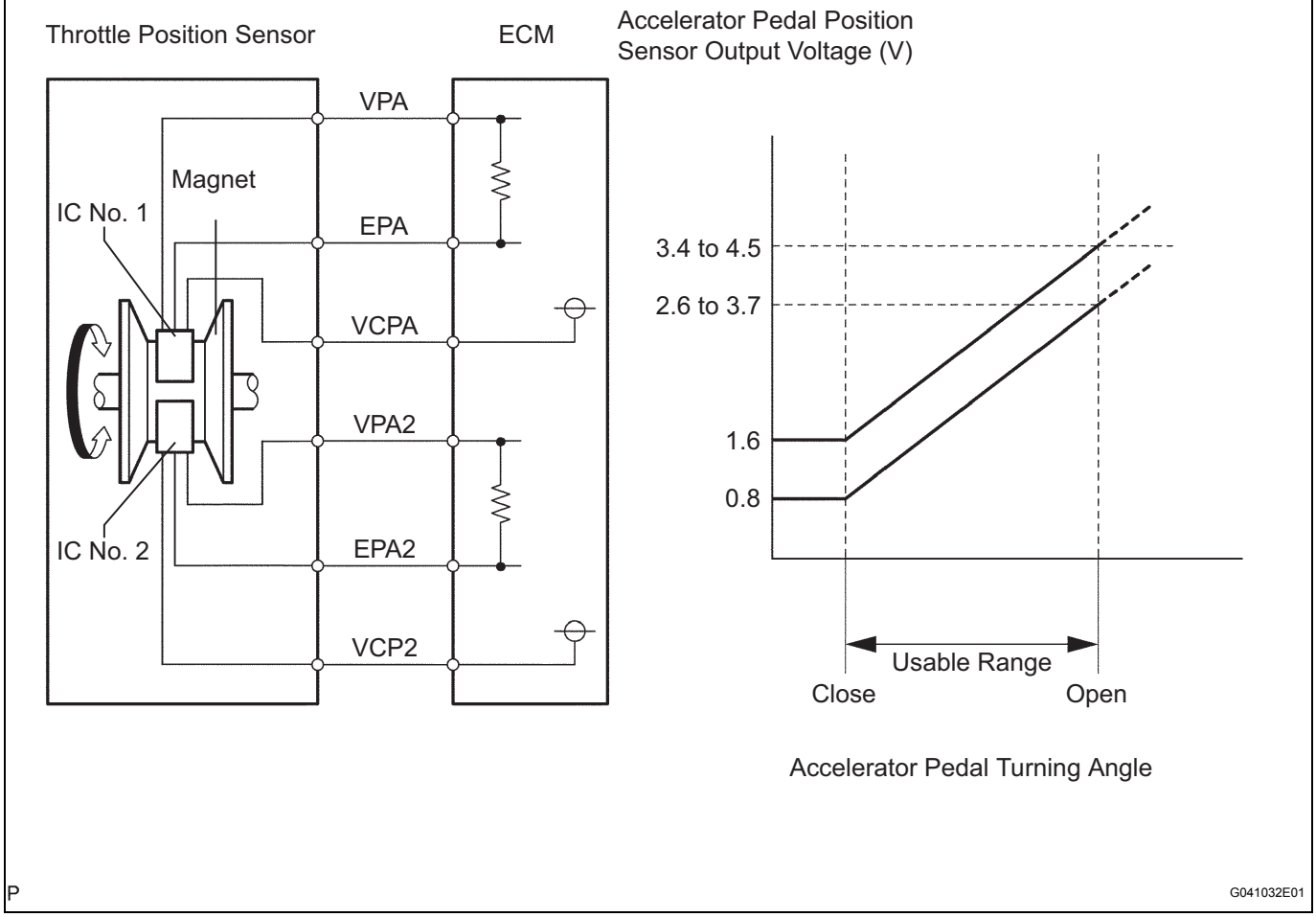

DTC No.	DTC Detection Conditions	Trouble Areas
P0120	Output voltage of VTA1 quickly fluctuates beyond lower and upper malfunction thresholds for 2 seconds (1 trip detection logic)	• Throttle Position (TP) sensor (built into throttle body) • ECM
P0122	Output voltage of VTA1 is 0.2 V or less for 2 seconds (1 trip detection logic)	• TP sensor (built into throttle body) • Short in VTA1 circuit • Open in VC circuit • ECM
P0123	Output voltage of VTA1 is 4.535 V or more for 2 seconds (1 trip detection logic)	• TP sensor (built into throttle body) • Open in VTA1 circuit • Open in E2 circuit • Short between VC and VTA1 circuits • ECM
P0220	Output voltage of VTA2 quickly fluctuates beyond lower and upper malfunction thresholds for 2 seconds (1 trip detection logic)	• TP sensor (built into throttle body) • ECM
P0222	Output voltage of VTA2 is 1.75 V or less for 2 seconds (1 trip detection logic)	• TP sensor (built into throttle body) • Short in VTA2 circuit • Open in VC circuit • ECM
P0223	Output voltage of VTA2 is 4.8 V or more, and VTA1 is between 0.2 V and 2.02 V, for 2 seconds (1 trip detection logic)	• TP sensor (built into throttle body) • Open in VTA2 circuit • Open in E2 circuit • Short between VC and VTA2 circuits • ECM

DTC No.	DTC Detection Conditions	Trouble Areas
P2135	Either condition (a) or (b) met (1 trip detection logic): (a) Difference between output voltages of VTA1 and VTA2 is 0.02 V or less for 0.5 seconds or more (b) Output voltage of VTA1 is 0.2 V or less, and VTA2 is 0.5 V or less, for 0.4 seconds or more	• Short between VTA1 and VTA2 circuits • TP sensor (built into throttle body) • ECM

HINT:

- When any of these DTCs are set, check the throttle valve opening angle by selecting the following menu items on the intelligent tester: DIAGNOSIS / ENHANCED OBD II / DATA LIST / ETCS / THROTTLE POS AND THROTTLE POS #2.
- THROTTLE POS denotes the VTA1 signal (expressed in percentages), and THROTTLE POS #2 denotes the VTA2 signal (expressed in voltages).

Reference (Normal Condition)

Tester Display	Accelerator Pedal Fully Released	Accelerator Pedal Fully Depressed
THROTTLE POS	**10 to 24%**	**64 to 96%**
THROTTLE POS #2	**2.1 to 3.1 V**	**4.5 to 5.0 V**

MONITOR DESCRIPTION

The ECM uses the Throttle Position (TP) sensor to monitor the throttle valve opening angle. There are several checks that the ECM performs to confirm the proper operation of the TP sensor.

- A specific voltage difference is expected between the sensor terminals, VTA1 and VTA2, for each throttle valve opening angle. If the difference between VTA1 and VTA2 is incorrect, the ECM interprets this as a malfunction in the sensor, and sets a DTC.
- VTA1 and VTA2 each have a specific voltage range. If VTA1 or VTA2 is outside the normal operating range, the ECM interprets this as a malfunction in the sensor, and sets a DTC.
- VTA1 and VTA2 should never be close to the same voltage level. If VTA1 is within 0.02 V of VTA2, the ECM determines that there is a short circuit in the sensor, and sets a DTC.

If the malfunction is not repaired successfully, a DTC is set 2 seconds after the engine is next started.

MONITOR STRATEGY

Related DTCs	P0120: Throttle position sensor 1 range check (Fluctuating) P0122: Throttle position sensor 1 range check (Low voltage) P0123: Throttle position sensor 1 range check (High voltage) P0220: Throttle position sensor 2 range check (Fluctuating) P0222: Throttle position sensor 2 range check (Low voltage) P0223: Throttle position sensor 2 range check (High voltage) P2135: Throttle position sensor range check (Correlation)
Required Sensors / Components (Main)	Throttle position sensor
Required Sensors / Components (Related)	-
Frequency of Operation	Continuous
Duration	2 seconds: P0120, P0122, P0123, P0220, P0222 and P0223 (Accelerator pedal ON) 10 seconds: P0120, P0122, P0123, P0220, P0222 and P0223 (Accelerator pedal OFF) Within 0.5 seconds: P2135
MIL Operation	Immediate
Sequence of Operation	None

TYPICAL ENABLING CONDITIONS

The monitor will run whenever these DTCs are not present	None

TYPICAL MALFUNCTION THRESHOLDS

P0120:

VTA1 voltage	0.2 V or less, or 4.535 V or more

P0122:

VTA1 voltage	0.2 V or less

P0123:

VTA1 voltage	4.535 V or more

P0220:

VTA2 voltage	1.75 V or less, or 4.8 V or more

P0222:

VTA2 voltage	1.75 V or less

P0223:

VTA2 voltage when VTA1 0.2 V to 2.02 V	4.8 V or more

P2135:

Either of following conditions A or B met:	-
Condition A	-
Difference between VTA1 and VTA2 voltages	0.02 V or less
Condition B	-
Both of the following conditions are met	(a) or (b)
(a) VTA1 voltage	0.2 V or less
(b) VTA2 voltage	1.75 V or less

COMPONENT OPERATING RANGE

VTA1 voltage	0.69 to 4.05 V
VTA2 voltage	2.25 to 4.8 V

FAIL-SAFE

When any of these DTCs, as well as other DTCs relating to ETCS (Electronic Throttle Control System) malfunctions, are set, the ECM enters fail-safe mode. During fail-safe mode, the ECM cuts the current to the throttle actuator off, and the throttle valve is returned to a 6° throttle angle by the return spring. The ECM then adjusts the engine output by controlling the fuel injection (intermittent fuel-cut) and ignition timing, in accordance with the accelerator pedal opening angle, to allow the vehicle to continue at a minimal speed. If the accelerator pedal is fully depressed slowly, the vehicle can be driven slowly. Fail-safe mode continues until a pass condition is detected, and the ignition switch is turned to OFF.

WIRING DIAGRAM

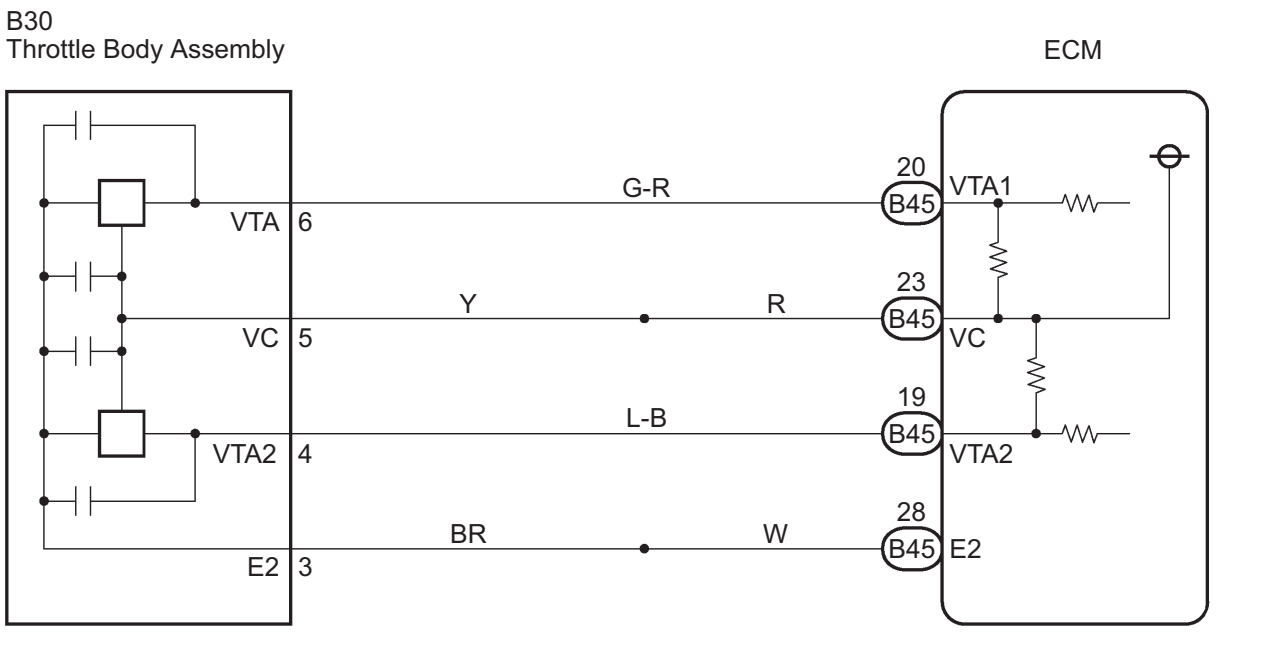

INSPECTION PROCEDURE

HINT:

- If other DTCs relating to different systems that have terminal E2 as the ground terminal are output simultaneously, terminal E2 may have an open circuit.
- Read freeze frame data using the intelligent tester. The ECM records vehicle and driving condition information as freeze frame data the moment a DTC is stored. When troubleshooting, freeze frame data can be helpful in determining whether the vehicle was running or stopped, whether the engine was warmed up or not, whether the air/fuel ratio was lean or rich, as well as other data recorded at the time of a malfunction.

1	READ VALUE OF INTELLIGENT TESTER (THROTTLE POS AND THROTTLE POS #2)

(a) Connect the intelligent tester to the DLC3.
(b) Turn the ignition switch on (IG) and turn the intelligent tester on.
(c) Select the following menu items: DIAGNOSIS / ENHANCED OBD II / DATA LIST / ETCS / THROTTLE POS and THROTTLE POS #2.
(d) Check the values displayed on the tester.

Result

TP#1 (VTA1) When AP Released	TP#2 (VTA2) When AP Released	TP#1 (VTA1) When AP Depressed	TP#2 (VTA2) When AP Depressed	Trouble Areas	Proceed to
0%	Between 0 V and 0.2 V	0%	Between 0 V and 0.2 V	VC circuit open	A
100%	Between 4.5 V and 5.0 V	100 %	Between 4.5 V and 5.0 V	E2 circuit open	A
0% or 100%	Between 2.1 V and 3.1 V (Fail-safe)	0% or 100%	Between 2.1 V and 3.1 V (Fail-safe)	VTA1 circuit open or ground short	A

TP#1 (VTA1) When AP Released	TP#2 (VTA2) When AP Released	TP#1 (VTA1) When AP Depressed	TP#2 (VTA2) When AP Depressed	Trouble Areas	Proceed to
Approx. 19% (Fail-safe)	Between 0 V and 0.2 V, or 4.5 V and 5.0 V	Between 10% and 24% (Fail-safe)	Between 0 V and 0.2 V, or 4.5 V and 5.0 V	VTA2 circuit open or ground short	A
Between 10% and 24%	Between 2.1 V and 3.1 V	Between 64% and 96% (Not fail-safe)	Between 4.5 V and 5.0 V (Not fail-safe)	TP sensor circuit normal	B

HINT:
- TP#1 denotes THROTTLE POS, and TP#2 denotes THROTTLE POS#2.
- AP denotes Accelerator Pedal.
- VTA1 is expressed as percentage, and VTA2 is expressed as voltage.

ES

B → Go to step 5

A

2 CHECK HARNESS AND CONNECTOR (THROTTLE POSITION SENSOR - ECM)

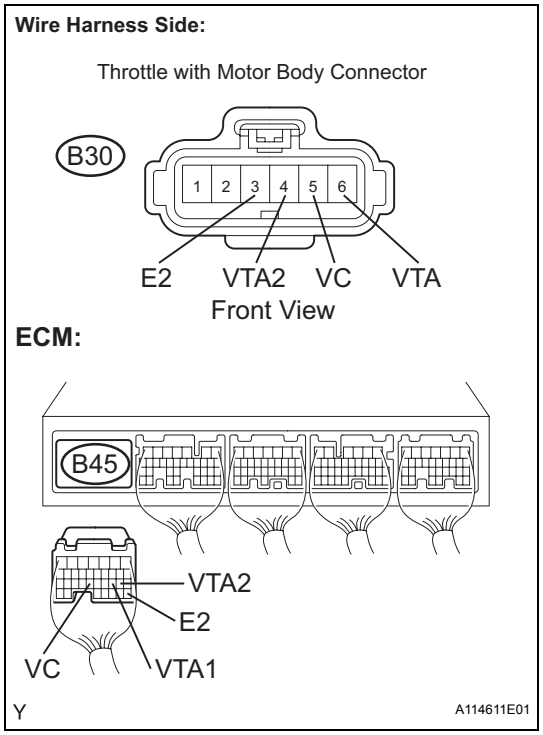

(a) Disconnect the B30 throttle with motor body connector.
(b) Disconnect the B45 ECM connector.
(c) Measure the resistance.

Standard resistance (Check for open)

Tester Connections	Specified Conditions
VC (B30-5) - VC (B45-23)	Below 1 Ω
VTA (B30-6) - VTA1 (B45-20)	Below 1 Ω
VTA2 (B30-4) - VTA2 (B45-19)	Below 1 Ω
E2 (B30-3) - E2 (B45-28)	Below 1 Ω

Standard resistance (Check for short)

Tester Connections	Specified Conditions
VC (B30-5) or VC (B45-23) - Body ground	10 kΩ or higher
VTA (B30-6) or VTA1 (B45-20) - Body ground	10 kΩ or higher
VTA2 (B30-4) or VTA2 (B45-19) - Body ground	10 kΩ or higher

(d) Reconnect the throttle with motor body connector.
(e) Reconnect the ECM connector.

NG → REPAIR OR REPLACE HARNESS OR CONNECTOR

OK

3	INSPECT ECM (VC VOLTAGE)

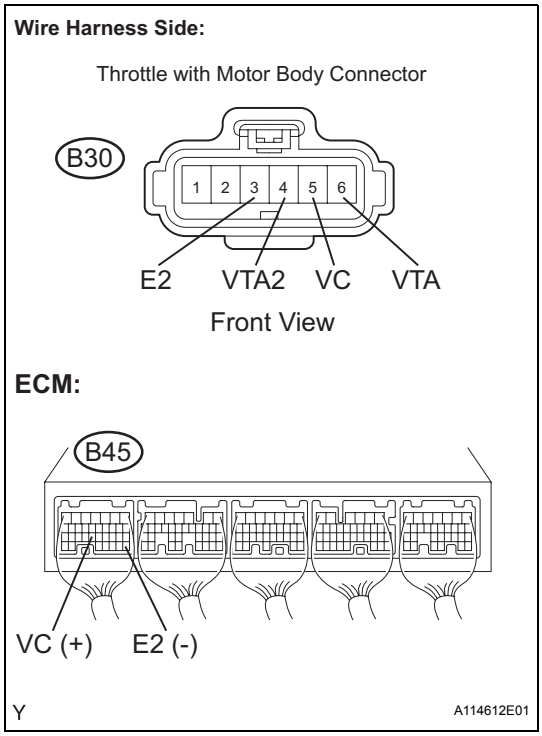

(a) Disconnect the B30 throttle with motor body connector.
(b) Turn the ignition switch on (IG).
(c) Measure the voltage between the terminals of the B45 ECM connector.

Standard voltage

Tester Connections	Specified Conditions
VC (B45-23) - E2 (B45-28)	4.5 to 5.0 V

(d) Reconnect the throttle with motor body connector.

NG → REPLACE ECM

OK

4	REPLACE THROTTLE WITH MOTOR BODY ASSEMBLY

(a) Replace the throttle with motor body assembly (See page ES-434).

NEXT

5	CHECK WHETHER DTC OUTPUT RECURS (THROTTLE POSITION SENSOR DTCS)

(a) Connect the intelligent tester to the DLC3.
(b) Turn the ignition switch on (IG) and turn the tester on.
(c) Clear DTCs (See page ES-44).
(d) Start the engine.
(e) Allow the engine to idle for 15 seconds or more.
(f) Select the following menu items: DIAGNOSIS / ENHANCED OBD II / DTC INFO / CURRENT CODES.
(g) Read DTCs.

Result

Display (DTC Output)	Proceed to
P0120, P0122, P0123, P0220, P0222, P0223 and/or P2135	A
No output	B

B → SYSTEM OK

A

REPLACE ECM

DTC	P0121	Throttle / Pedal Position Sensor / Switch "A" Circuit Range / Performance Problem

HINT:
This DTC relates to the Throttle Position (TP) sensor.

DESCRIPTION

Refer to DTC P0120 (See page ES-136).

DTC No.	DTC Detection Conditions	Trouble Areas
P0121	Difference between VTA1 and VTA2 voltages less than 0.8 V, or more than 1.6 V for 2 seconds (1 trip detection logic)	TP sensor (built into throttle body)

ES

MONITOR DESCRIPTION

The ECM uses the TP sensor to monitor the throttle valve opening angle.
This sensor transmits two signals: VTA1 and VTA2. VTA1 is used to detect the throttle opening angle and VTA2 is used to detect malfunctions in VTA1. The ECM performs several checks to confirm the proper operation of the TP sensor and VTA1.
For each throttle opening angle, a specific voltage difference is expected between the outputs of VTA1 and VTA2. If the voltage output difference between the two signals deviates from the normal operating range, the ECM interprets this as a malfunction of the TP sensor. The ECM illuminates the MIL and sets the DTC.
If the malfunction is not repaired successfully, the DTC is set 2 seconds after the engine is next started.

MONITOR STRATEGY

Related DTCs	P0121: TP sensor rationality
Required Sensors / Components (Main)	TP sensor
Required Sensors / Components (Related)	-
Frequency of Operation	Continuous
Duration	Within 2 seconds
MIL Operation	Immediate
Sequence of Operation	None

TYPICAL ENABLING CONDITIONS

This monitor will not run whenever these DTCs are not present	None
Either of the following conditions 1 or 2	-
1. Ignition switch	ON
2. Electric throttle motor power	ON
TP sensor malfunction (P0120, P0122, P0123, P0220, P0222, P0223, P02135)	Not detected

TYPICAL MALFUNCTION THRESHOLDS

Difference in voltage between VTA1 and VTA2 TP sensor 1 - [TP sensor 2 x 0.8 (corrected by learning value)]	Less than 0.8 V, or more than 1.6 V

FAIL-SAFE

When this DTC, as well as other DTCs relating to ETCS (Electronic Throttle Control System) malfunctions, is set, the ECM enters fail-safe mode. During fail-safe mode, the ECM cuts the current to the throttle actuator off, and the throttle valve is returned to a 6° throttle angle by the return spring. The ECM then adjusts the engine output by controlling the fuel injection (intermittent fuel-cut) and ignition timing, in accordance with the accelerator pedal opening angle, to allow the vehicle to continue at a minimal speed. If the accelerator pedal is fully depressed slowly, the vehicle can be driven slowly. Fail-safe mode continues until a pass condition is detected, and the ignition switch is then turned off.

INSPECTION PROCEDURE

HINT:

Read freeze frame data using the intelligent tester. The ECM records vehicle and driving condition information as freeze frame data the moment a DTC is stored. When troubleshooting, freeze frame data can be helpful in determining whether the vehicle was running or stopped, whether the engine was warmed up or not, whether the air/fuel ratio was lean or rich, as well as other data recorded at the time of a malfunction.

1	**REPLACE THROTTLE BODY ASSEMBLY**

(a) Replace the throttle body assembly (See page ES-433).

NEXT

END

DTC	P0125	Insufficient Coolant Temperature for Closed Loop Fuel Control

DESCRIPTION

Refer to DTC P0115 (See page ES-128).

DTC No.	DTC Detection Conditions	Trouble Areas
P0125	Engine coolant temperature (ECT) does not reach closed-loop enable temperature for 20 minutes (this period varies with engine start ECT)	• Cooling system • Engine coolant temperature sensor • Thermostat

MONITOR DESCRIPTION

The resistance of the ECT sensor varies in proportion to the actual ECT. The ECM supplies a constant voltage to the sensor and monitors the signal output voltage of the sensor. The signal voltage output varies according to the changing resistance of the sensor. After the engine is started, the ECT is monitored through this signal. If the ECT sensor indicates that the engine is not yet warm enough for closed-loop fuel control, despite a specified period of time having elapsed since the engine was started, the ECM interprets this as a malfunction in the sensor or cooling system and sets the DTC.

Example:

The ECT is 0°C (32°F) at engine start. After 5 minutes running time, the ECT sensor still indicates that the engine is not warm enough to begin closed-loop fuel (air-fuel ratio feedback) control. The ECM interprets this as a malfunction in the sensor or cooling system and sets the DTC.

MONITOR STRATEGY

Related DTCs	P0125: Insufficient engine coolant temperature for closed-loop fuel control
Required Sensors / Components (Main)	Thermostat, cooling system
Required Sensors / Components (Related)	Engine coolant temperature sensor and mass air flow meter
Frequency of Operation	Continuous
Duration	61 seconds: Engine coolant temperature at engine start -8.34°C (17°F) or more 106 seconds: Engine coolant temperature at engine start -19.45 to -8.34°C (-3 to 17°F) 20 minutes: Engine coolant temperature at engine start less than -19.45°C (-3°F)
MIL Operation	2 driving cycles
Sequence of Operation	None

TYPICAL ENABLING CONDITIONS

The monitor will run whenever these DTCs are not present	None
Fuel cut	OFF
Engine	Running

TYPICAL MALFUNCTION THRESHOLDS

Time until actual engine coolant temperature reaches closed-loop fuel control enabling temperature	61 seconds or more: Engine coolant temperature at engine start -8.34°C (17°F) or more 106 seconds or more: Engine coolant temperature at engine start -19.45 to -8.34°C (-3 to 17°F) 20 minutes or more: Engine coolant temperature at engine start less than -19.45°C (-3°F)

WIRING DIAGRAM

Refer to DTC P0115 (See page ES-129).

INSPECTION PROCEDURE

HINT:

- If any of DTCs P0115, P0116, P0117 or P0118 are set simultaneously with DTC P0125, the Engine Coolant Temperature (ECT) sensor may have an open or a short circuit. Troubleshoot those DTCs first.
- Read freeze frame data using the intelligent tester. The ECM records vehicle and driving condition information as freeze frame data the moment a DTC is stored. When troubleshooting, freeze frame data can be helpful in determining whether the vehicle was running or stopped, whether the engine was warmed up or not, whether the air/fuel ratio was lean or rich, as well as other data recorded at the time of a malfunction.

1 CHECK ANY OTHER DTCS OUTPUT (IN ADDITION TO DTC P0125)

ES

(a) Connect the intelligent tester to the DLC3.
(b) Turn the ignition switch on (IG).
(c) Turn the tester on.
(d) Select the following menu items: DIAGNOSIS / ENHANCED OBD II / DTC INFO / CURRENT CODES.
(e) Read DTCs.

Result

Display (DTC Output)	Proceed to
P0125	A
P0125 and other DTCs	B

HINT:
If any DTCs other than P0125 are output, troubleshoot those DTCs first.

B → GO TO DTC CHART

A

2 INSPECT THERMOSTAT

(a) Remove the thermostat (See page CO-26).
(b) Check the valve opening temperature of the thermostat (See page CO-26).
Standard:
80° to 84°C (176° to 183°F)
HINT:
In addition to the above check, confirm that the valve is completely closed when the temperature is below the standard.
(c) Reinstall the thermostat (See page CO-27).

NG → REPLACE THERMOSTAT

OK

3	CHECK COOLING SYSTEM

(a) Check for defects in the cooling system that might cause the system to be too cold, such as abnormal radiator fan operation or any modifications.

NG → **REPAIR OR REPLACE COOLING SYSTEM**

OK

REPLACE ENGINE COOLANT TEMPERATURE SENSOR

DTC	P0128	Coolant Thermostat (Coolant Temperature Below Thermostat Regulating Temperature)

HINT:
This DTC relates to the thermostat.

DESCRIPTION

This DTC is set when the Engine Coolant Temperature (ECT) does not reach 75°C (167°F) despite sufficient engine warm-up time.

DTC No.	DTC Detection Conditions	Trouble Areas
P0128	Conditions (a), (b) and (c) are met for 5 seconds (2 trip detection logic): (a) Cold start (b) Engine warmed up (c) ECT less than 75°C (167°F)	• Thermostat • Cooling system • ECT sensor • ECM

ES

MONITOR DESCRIPTION

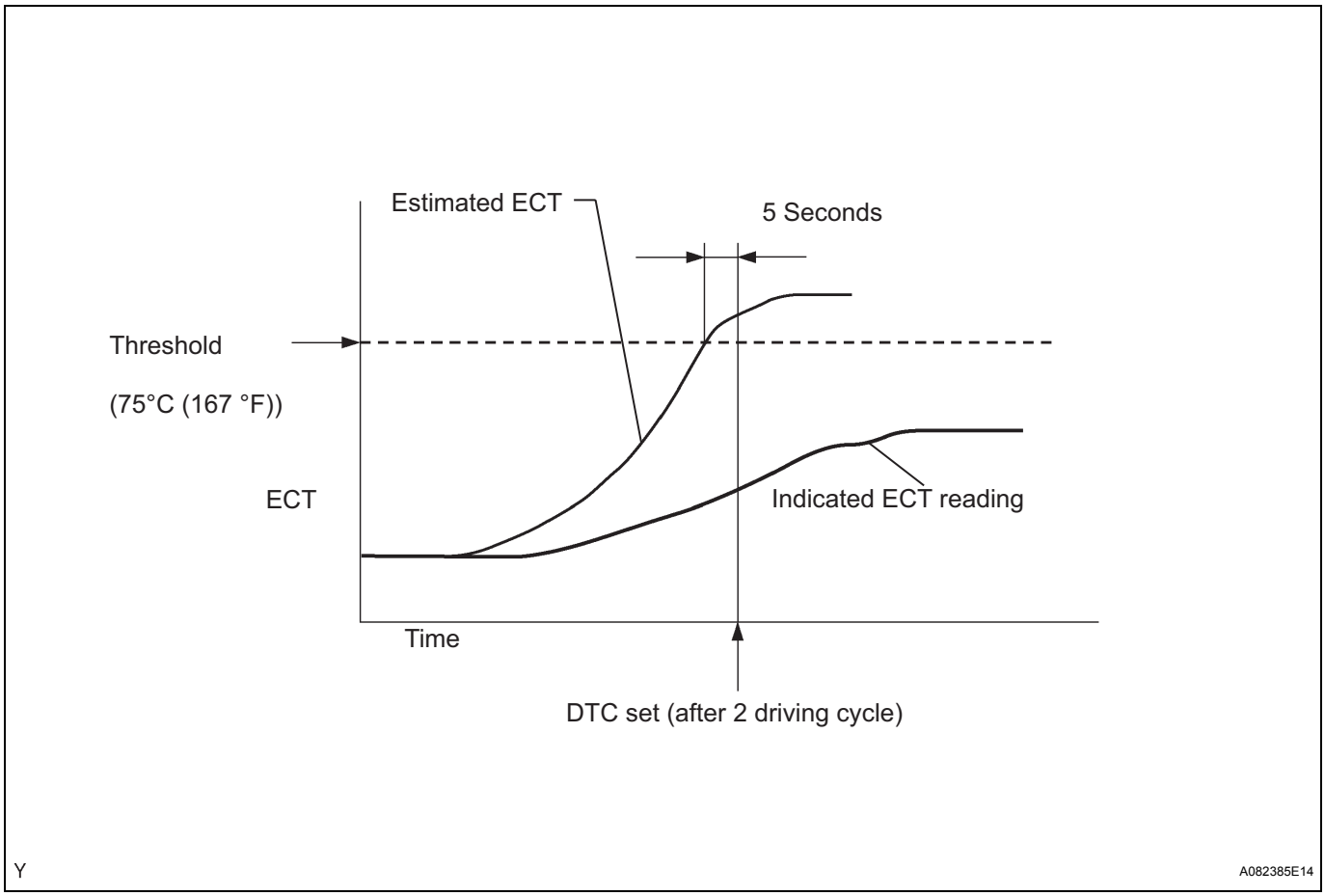

The ECM estimates the ECT based on the starting temperature, engine loads, and engine speeds. The ECM then compares the estimated temperature with the actual ECT. When the estimated ECT reaches 75°C (167°F), the ECM checks the actual ECT. If the actual ECT is less than 75°C (167°F), the ECM interprets this as a malfunction in the thermostat or the engine cooling system and sets the DTC.

MONITOR STRATEGY

Related DTCs	P0128: Coolant Thermostat
Required Sensors / Components (Main)	Thermostat

Required Sensors / Components (Related)	Engine Coolant Temperature (ECT) sensor, Intake Air Temperature (IAT) sensor, Vehicle speed sensor
Frequency of Operation	Once per driving cycle
Duration	900 seconds
MIL Operation	2 driving cycles
Sequence of Operation	None

TYPICAL ENABLING CONDITIONS

The monitor will run whenever these DTCs are not present	P0010, P0020 (VVT VSV 1, 2), P0011, P0012 (VVT System1-Advance, Retard), P0021, P0022 (VVT System2-Adavance, Retard), P0031, P0032, P0051, P0052 (A/F Sensor heater Sensor 1), P0100, P0101, P0102, P0103 (MAF Sensor), P0110, P0112, P0113 (IAT Sensor), P0115, P0116, P0117, P0118 (ECT Sensor), P0125 (Insufficient ECT for Closed Loop), P0137, P0138 (O2 Sensor 1), P0171,P0172 (Fuel System), P0300, P0301, P0302, P0303, P0304, P0305, P0306 (Misfire), P0335 (CKP Sensor), P0340, P0342, P0343, P0345 (VVT Sensor1, 2), P0351, P0352, P0353, P0354, P0355, P0356 (Ignitor), P0500 (VSS), P2196, P2198(A/F Sensor (Rationality)), P2A00, P2A03 (A/F Sensor (Slow Response))
Battery voltage	11 V or more
Either of following conditions met:	Condition 1 or 2
1. All of following conditions met:	Condition (a), (b) and (c)
(a) ECT at engine start - IAT at engine starts	-15° to 7°C (5° to 45°F)
(b) ECT at engine start	-10° to 56°C (14° to 133°F)
(c) IAT at engine start	-10° to 56°C (14° to 133°F)
2. All of following conditions met:	Condition (a), (b) and (c)
(a) ECT at engine start - IAT at engine start	More than 7°C (45°F)
(b) ECT at engine start	56°C (133°F) or less
(c) IAT at engine start	-10°C (14°F) or more
Accumulated time that vehicle speed is 80 mph (128km/h) or more	Less than 20 seconds

TYPICAL MALFUNCTION THRESHOLDS

Duration that all of following conditions 1 and 2 met	5 seconds or more
1. Estimated ECT	75°C (167°F) or more
2. ECT sensor output	Below 75°C (167°F)

MONITOR RESULT

Refer to Checking monitor Status for detailed information (See page ES-25).

Thermostat:

MID	TID	Scaling	Description of Test Value	Minimum Test Limit	Maximum Test Limit
$E1	$E8	Multiply by 0.1 [°C]	ECT sensor output when estimated ECT reached to malfunction criteria	Malfunction criteria	Maximum test limit

If the Test Value is less than Test Limit when the engine is warmed up, the ECM interprets this as a malfunction.

INSPECTION PROCEDURE

HINT:

Read freeze frame data using the intelligent tester. The ECM records vehicle and driving condition information as freeze frame data the moment a DTC is stored. When troubleshooting, freeze frame data can be helpful in determining whether the vehicle was running or stopped, whether the engine was warmed up or not, whether the air/fuel ratio was lean or rich, as well as other data recorded at the time of a malfunction.

1	CHECK ANY OTHER DTCS OUTPUT (IN ADDITION TO DTC P0128)

(a) Connect the intelligent tester to the DLC3.
(b) Turn the ignition switch on (IG).
(c) Turn the tester on.
(d) Select the following menu items: DIAGNOSIS / ENHANCED OBD II / DTC INFO / CURRENT CODES.
(e) Read DTCs.

Result

Display (DTC Output)	Proceed to
P0128	A
P0128 and other DTCs	B

HINT:
If any DTCs other than P0128 are output, troubleshoot those DTCs first.

B → GO TO DTC CHART

A

2	CHECK COOLING SYSTEM

(a) Check for defects in the cooling system that might cause the system to be too cold, such as abnormal radiator fan operation or any modifications.

NG → REPAIR OR REPLACE COOLING SYSTEM

OK

3	INSPECT THERMOSTAT

(a) Remove the thermostat (See page CO-26).
(b) Check the valve opening temperature of the thermostat (See page CO-26).
Standard:
80° to 84°C (176° to 183°F)
HINT:
In addition to the above check, confirm that the valve is completely closed when the temperature is below the standard.
(c) Reinstall the thermostat (See page CO-27).

NG → REPLACE THERMOSTAT

OK

REPLACE ECM

DTC	P0136	Oxygen Sensor Circuit Malfunction (Bank 1 Sensor 2)
DTC	P0137	Oxygen Sensor Circuit Low Voltage (Bank 1 Sensor 2)
DTC	P0138	Oxygen Sensor Circuit High Voltage (Bank 1 Sensor 2)
DTC	P0156	Oxygen Sensor Circuit Malfunction (Bank 2 Sensor 2)
DTC	P0157	Oxygen Sensor Circuit Low Voltage (Bank 2 Sensor 2)
DTC	P0158	Oxygen Sensor Circuit High Voltage (Bank 2 Sensor 2)

ES

HINT:
Sensor 2 refers to the sensor mounted behind the Three-Way Catalytic Converter (TWC) and located far from the engine assembly.

DESCRIPTION

In order to obtain a high purification rate of the carbon monoxide (CO), hydrocarbon (HC) and nitrogen oxide (NOx) components in the exhaust gas, a TWC (Three-Way Catalytic Converter) is used. For the most efficient use of the TWC, the air-fuel ratio must be precisely controlled so that it is always close to the stoichiometric air-fuel level. For helping the ECM to deliver accurate air-fuel ratio control, a Heated Oxygen (HO2) sensor is used.
The HO2 sensor is located behind the TWC, and detects the oxygen concentration in the exhaust gas. Since the sensor is integrated with the heater that heats the sensing portion, it is possible to detect the oxygen concentration even when the intake air volume is low (the exhaust gas temperature is low).
When the air-fuel ratio becomes lean, the oxygen concentration in the exhaust gas is rich. The HO2 sensor informs the ECM that the post-TWC air-fuel ratio is lean (low voltage, i.e. less than 0.45 V).
Conversely, when the air-fuel ratio is richer than the stoichiometric air-fuel level, the oxygen concentration in the exhaust gas becomes lean. The HO2 sensor informs the ECM that the post-TWC air-fuel ratio is rich (high voltage, i.e. more than 0.45 V). The HO2 sensor has the property of changing its output voltage drastically when the air-fuel ratio is close to the stoichiometric level.
The ECM uses the supplementary information from the HO2 sensor to determine whether the air-fuel ratio after the TWC is rich or lean, and adjusts the fuel injection time accordingly. Thus, if the HO2 sensor is working improperly due to internal malfunctions, the ECM is unable to compensate for deviations in the primary air-fuel ratio control.

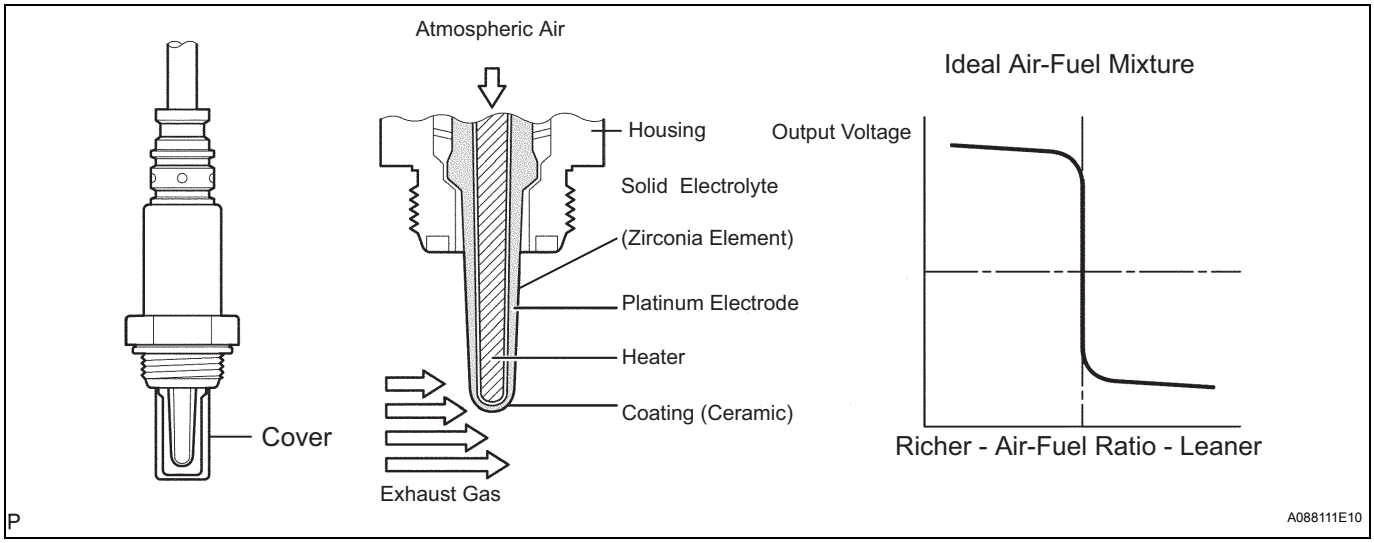

ES

DTC No.	DTC Detection Conditions	Trouble Areas
P0136 P0156	• Abnormal voltage output: During active air-fuel ratio control, following conditions (a) and (b) are met for certain period of time (2 trip detection logic): (a) Heated Oxygen (HO2) sensor voltage does not decrease to less than 0.2 V (b) HO2 sensor voltage does not increase to more than 0.6 V • Low impedance: Sensor impedance less than 5 Ω for more than 30 seconds when ECM presumes sensor to being warmed up and operating normally (2 trip detection logic)	• Open or short in HO2 sensor (bank 1, 2 sensor 2) circuit • HO2 sensor (bank 1, 2 sensor 2) • HO2 sensor heater (bank 1, 2 sensor 2) • Air-Fuel Ratio (A/F) sensor (bank 1, 2 sensor 1) • EFI relay • Gas leakage from exhaust system
P0137 P0157	• Low voltage (open): During active air-fuel ratio control, following conditions (a) and (b) are met for certain period of time (2 trip detection logic): (a) HO2 sensor voltage output less than 0.21 V (b) Target air-fuel ratio rich • High impedance: Sensor impedance 15 kΩ or more for more than 90 seconds when ECM presumes sensor to being warmed up and operating normally (2 trip detection logic)	• Open in HO2 sensor (bank 1, 2 sensor 2) circuit • HO2 sensor (bank 1, 2 sensor 2) • HO2 sensor heater (bank 1, 2 sensor 2) • EFI relay • Gas leakage from exhaust system
P0138 P0158	• High voltage (short): During active air-fuel ratio control, following conditions (a) and (b) are met for certain period of time (2 trip detection logic): (a) HO2 sensor voltage output 0.59 V or more (b) Target air-fuel ratio lean • Extremely high voltage (short): HO2 sensor voltage output exceeds 1.2 V for more than 30 seconds (2 trip detection logic)	• Short in HO2 sensor (bank 1, 2 sensor 2) circuit • HO2 sensor (bank 1, 2 sensor 2) • ECM internal circuit malfunction

MONITOR DESCRIPTION

Active Air-Fuel Ratio Control

The ECM usually performs air-fuel ratio feedback control so that the Air-Fuel Ratio (A/F) sensor output indicates a near stoichiometric air-fuel level. This vehicle includes active air-fuel ratio control in addition to regular air-fuel ratio control. The ECM performs active air-fuel ratio control to detect any deterioration in the Three-Way Catalytic Converter (TWC) and Heated Oxygen (HO2) sensor malfunctions (refer to the diagram below).

Active air-fuel ratio control is performed for approximately 15 to 20 seconds while driving with a warm engine. During active air-fuel ratio control, the air-fuel ratio is forcibly regulated to become lean or rich by the ECM.
If the ECM detects a malfunction, one of the following DTCs is set: DTC P0136 or P0156 (abnormal voltage output), P0137 or P0157 (open circuit) or P0138 or P0158 (short circuit).

Abnormal Voltage Output of HO2 Sensor (DTCs P0136 and P0156)

While the ECM is performing active air-fuel ratio control, the air-fuel ratio is forcibly regulated to become rich or lean. If the sensor is not functioning properly, the voltage output variation is small. For example, when the HO2 sensor voltage does not decrease to less than 0.21 V or does not increase to more than 0.59 V during active air-fuel ratio control, the ECM determines that the sensor voltage output is abnormal and sets DTCs P0136 and P0156.

ES

HO2 SENSOR CIRCUIT MALFUNCTION)

(P0136 and P0156: ABNORMAL VOLTAGE)

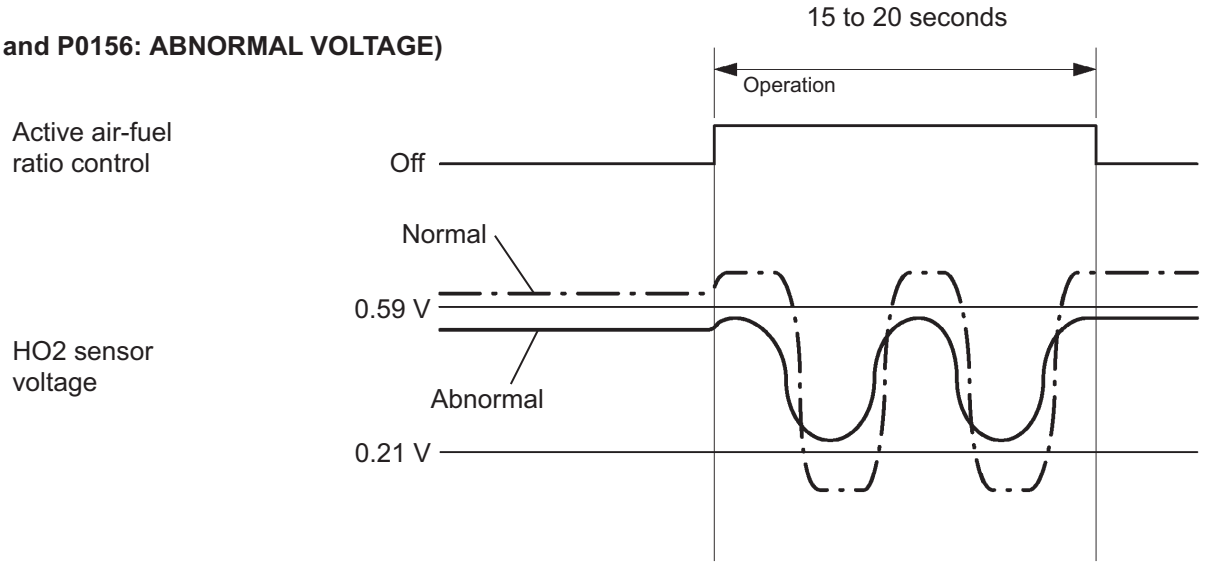

Open or Short in Heated Oxygen (HO2) Sensor Circuit (DTCs P0137 and P0157 or P0138 and P0158)

During active air-fuel ratio control, the ECM calculates the Oxygen Storage Capacity (OSC)* of the Three-Way Catalytic Converter (TWC) by forcibly regulating the air-fuel ratio to become rich or lean.
If the HO2 sensor has an open or short, or the voltage output of the sensor noticeably decreases, the OSC indicates an extraordinarily high value. Even if the ECM attempts to continue regulating the air-fuel ratio to become rich or lean, the HO2 sensor output does not change.
While performing active air-fuel ratio control, when the target air-fuel ratio is rich and the HO2 sensor voltage output is 0.21 V or less (lean), the ECM interprets this as an abnormally low sensor output voltage and sets DTC P0137 or P0157. When the target air-fuel ratio is lean and the voltage output is 0.59 V or more (rich) during active air-fuel ratio control, the ECM determines that the sensor voltage output is abnormally high, and sets DTC P0138 or P0158.
HINT:
DTC P0138 or P0158 is also set if the HO2 sensor voltage output is more than 1.2 V for 30 seconds or more.
*: The TWC has the capability to store oxygen. The OSC and the emission purification capacity of the TWC are mutually related. The ECM determines whether the catalyst has deteriorated, based on the calculated OSC value (See page ES-229).

HO2 SENSOR CIRCUIT LOW VOLTAGE (P0137 and P0157: OPEN)

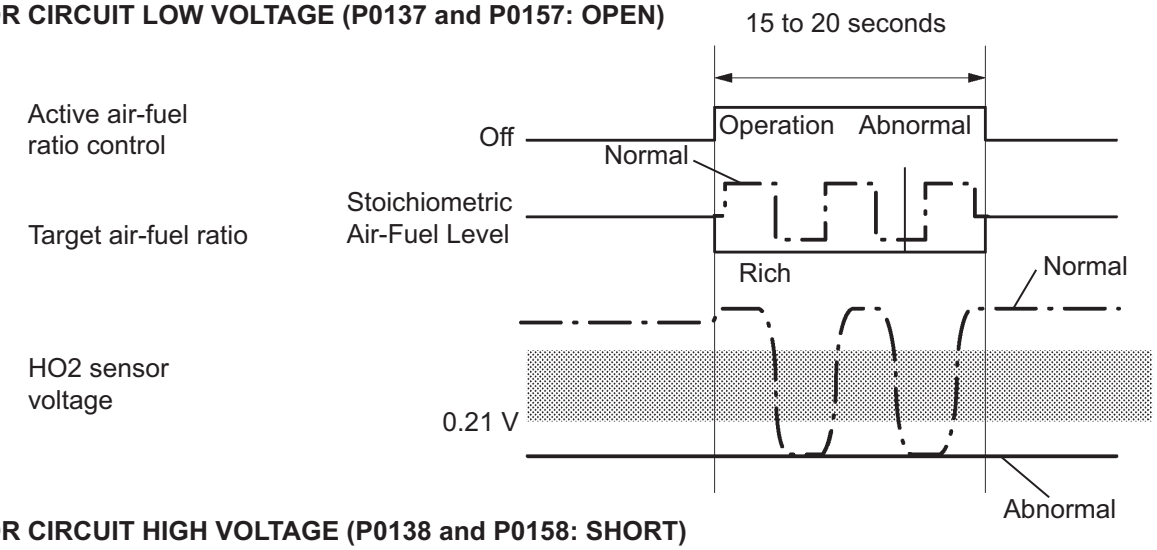

HO2 SENSOR CIRCUIT HIGH VOLTAGE (P0138 and P0158: SHORT)

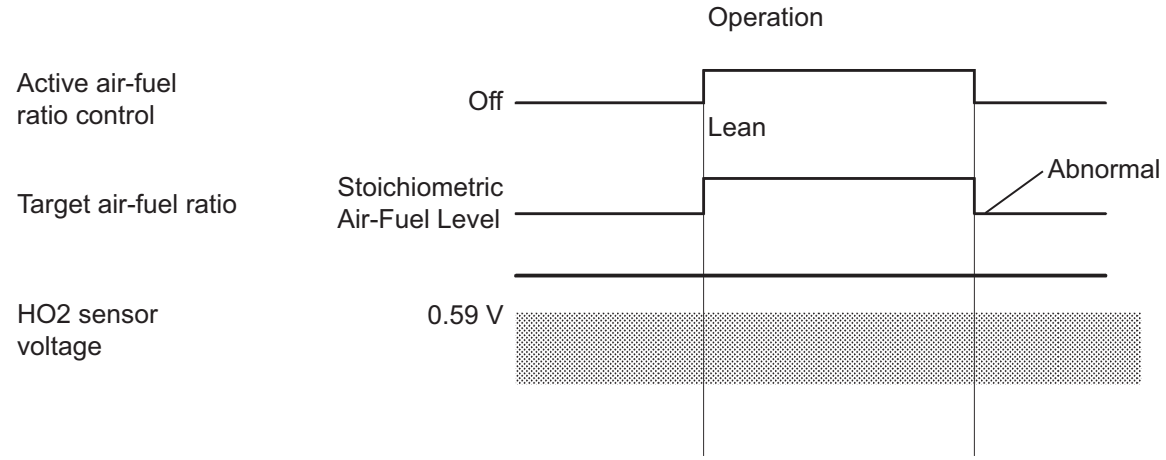

Y

A080024E08

ES

High or Low Impedance of Heated Oxygen (HO2) Sensor (DTCs P0136 and P0156 or P0137 and P0157)

During normal air-fuel ratio feedback control, there are small variations in the exhaust gas oxygen concentration. In order to continuously monitor the slight variation of the HO2 sensor signal while the engine is running, the impedance* of the sensor is measured by the ECM. The ECM determines that there is a malfunction in the sensor when the measured impedance deviates from the standard range.

*: The effective resistance in an alternating current electrical circuit.

Interrelation between temperature of element and impedance:

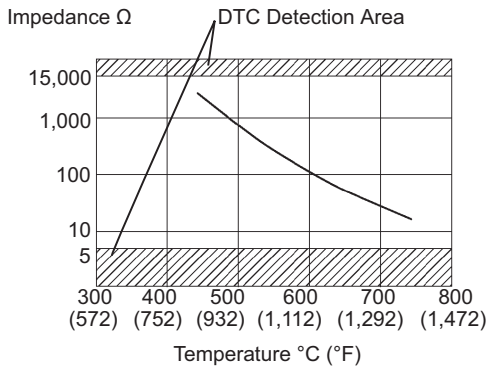

HINT:

- The impedance cannot be measured using an ohmmeter.
- DTCs P0136 and P0156 indicate the deterioration of the HO2 sensor. The ECM sets the DTCs by calculating the impedance of the sensor when the typical enabling conditions are satisfied (1 driving cycle).
- DTCs P0137 and P0157 indicate an open or short circuit in the HO2 sensor (1 driving cycle). The ECM sets the DTCs when the impedance of the sensor exceeds the threshold 15 kΩ.

MONITOR STRATEGY

Related DTCs	P0136: Heated oxygen sensor output voltage (Output voltage) (bank 1) P0136: Heated oxygen sensor impedance (Low) (bank 1) P0137: Heated oxygen sensor output voltage (Low voltage) (bank 1) P0137: Heated oxygen sensor impedance (High) (bank 1) P0138: Heated oxygen sensor output voltage (High voltage) (bank 1) P0138: Heated oxygen sensor output voltage (Extremely high) (bank 1) P0156: Heated oxygen sensor output voltage (Output voltage) (bank 2) P0156: Heated oxygen sensor impedance (Low) (bank 2) P0157: Heated oxygen sensor output voltage (Low voltage) (bank 2) P0157: Heated oxygen sensor impedance (High) (bank 2) P0158: Heated oxygen sensor output voltage (High voltage) (bank 2) P0158: Heated oxygen sensor impedance (Extremely high) (bank 2)
Required Sensors / Components (Main)	Heated oxygen sensor
Required Sensors / Components (Related)	Crankshaft position sensor, engine coolant temperature sensor, mass air flow meter and throttle position sensor
Frequency of Operation	Once per driving cycle: Active air-fuel ratio control detection Continuous: Others
Duration	20 seconds.: Heated oxygen sensor output (Output voltage, High voltage, Low voltage) 30 seconds.: Heated oxygen sensor impedance (Low) 90 seconds.: Heated oxygen sensor impedance (High) 10 seconds.: Heated oxygen sensor impedance (Extremely high)
MIL Operation	2 driving cycles
Sequence of Operation	None

TYPICAL ENABLING CONDITIONS

All:

The monitor will run whenever these DTCs are not present	P0031, P0032, P0051, P0052 (A/F Sensor Heater Sensor 1), P0100, P0101, P0102, P0103 (MAF Sensor), P0110, P0112, P0113 (IAT Sensor), P0115, P0116, P0117, P0118 (ECT Sensor), P0120, P0121, P0122, P0123, P0220, P0222, P0223, P2135 (TP Sensor), P0125 (Insufficient ECT for Closed Loop), P0137, P0138 (O2 Sensor 1), P0171,P0172 (Fuel System), P0300, P0301, P0302, P0303, P0304, P0305, P0306 (Misfire), P0335 (CKP Sensor), P0340, P0342, P0343, P0345 (VVT Sensor 1,2), P0500 (VSS), P2196, P2198 (A/F Sensor (Rationality)), P2A00, P2A03 (A/F Sensor (Slow Response))

Heated Oxygen Sensor Output Voltage (Output Voltage, High Voltage and Low Voltage):

Active air-fuel ratio control	Performing
Active air-fuel ratio control begins when all of following conditions met:	-
Battery voltage	11 V or more
Engine coolant temperature	75°C (167°F) or more
Idle	OFF
Engine RPM	Less than 3,200 rpm
A/F sensor status	Activated
Fuel-cut	OFF
Engine load	10 to 70%
Shift position	4th or more

Heated Oxygen Sensor Impedance (Low):

Battery voltage	11 V or more
Estimated HO2S temperature	Less than 700°C (1,292°F)
ECM monitor	Completed
DTC P0606	Not set

Heated Oxygen Sensor Impedance (High):

Battery voltage	11 V or more
Estimated HO2S temperature	More than 450°C (842°F)
DTC P0606	Not set

Heated Oxygen Sensor Output Voltage (Extremely High):

Battery voltage	11 V or more
Time after engine start	2 seconds or more

TYPICAL MALFUNCTION THRESHOLDS

Heated Oxygen Sensor Output Voltage (Output voltage):

Either of the following conditions is met:	1 or 2
1. All of the following conditions (a), (b) and (c) are met	-
(a) Commanded air-fuel ratio	14.3 or less
(b) Rear HO2 sensor voltage	0.21 to 0.59 V
(c) OSC (Oxygen Storage Capacity of Catalyst)	1.8 g or more
2. All of the following conditions (d), (f) and (g) are met.	-
(d) Commanded air-fuel ratio	14.9 or more
(f) Rear HO2 sensor voltage	0.21 to 0.59 V
(g) OSC	1.8 g or more

Heated Oxygen Sensor Output Voltage (Low output voltage):

All of the following conditions (a), (b) and (c) are met.	-
(a) Commanded air-fuel ratio	14.3 or less
(b) Rear HO2 sensor voltage	Less than 0.21 V

(c) OSC (Oxygen Storage Capacity of Catalyst)	1.8 g or more

Heated Oxygen Sensor Output Voltage (High output voltage):

All of the following conditions (a), (b) and (c) are met.	-
(a) Commanded air-fuel ratio	14.9 or more
(b) Rear HO2 sensor voltage	More than 0.59 V
(c) OSC (Oxygen Storage Capacity of Catalyst)	1.8 g or more

Heated Oxygen Sensor Impedance (Low):

Duration of following condition	30 seconds or more
Rear heated oxygen sensor impedance	Less than 5 Ω

Heated Oxygen Sensor Impedance (High):

Duration of following condition	90 seconds or more
Rear heated oxygen sensor impedance	15 kΩ or more

Heated Oxygen Sensor Impedance (Extremely High):

Duration of following condition	10 seconds or more
Rear heated oxygen sensor voltage	1.2 V or more

COMPONENT OPERATING RANGE

Duration of following condition met	30 seconds or more
Heated oxygen sensor voltage	Varies between 0.1 and 0.9 V

MONITOR RESULT

Refer to Checking Monitor Status for detailed information (See page ES-25).

HO2S bank 1 sensor 2

MID	TID	Scaling	Description of Test Value	Minimum Test Limit	Maximum Test Limit
$02	$07	Multiply by 0.001 [V]	Minimum sensor voltage	Minimum test limit	Maximum test limit
$02	$08	Multiply by 0.001 [V]	Maximum sensor voltage	Minimum test limit	Maximum test limit
$02	$8F	Multiply by 0.001 [g]	Maximum oxygen storage capacity	0	Maximum test limit

If the sensor voltage is outside the standard values, the ECM interprets this as a malfunction and sets a DTC.

WIRING DIAGRAM

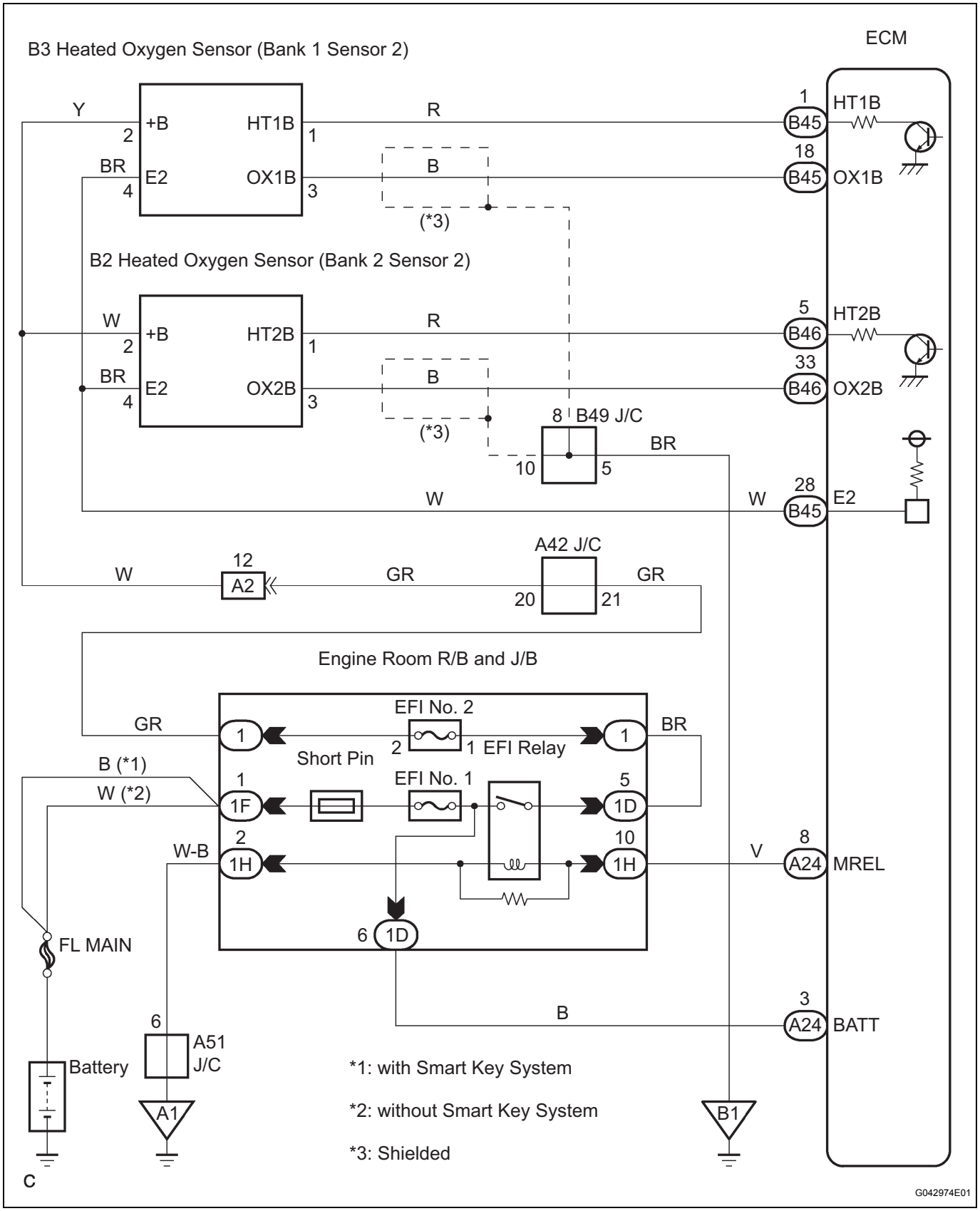

CONFIRMATION DRIVING PATTERN

HINT:

- This confirmation driving pattern is used in steps 5, 8 and 11 of the following diagnostic troubleshooting procedure when using the intelligent tester.
- Performing this confirmation pattern will activate the Heated Oxygen (HO2) sensor monitor. (The catalyst monitor is performed simultaneously.) This is very useful for verifying the completion of a repair.

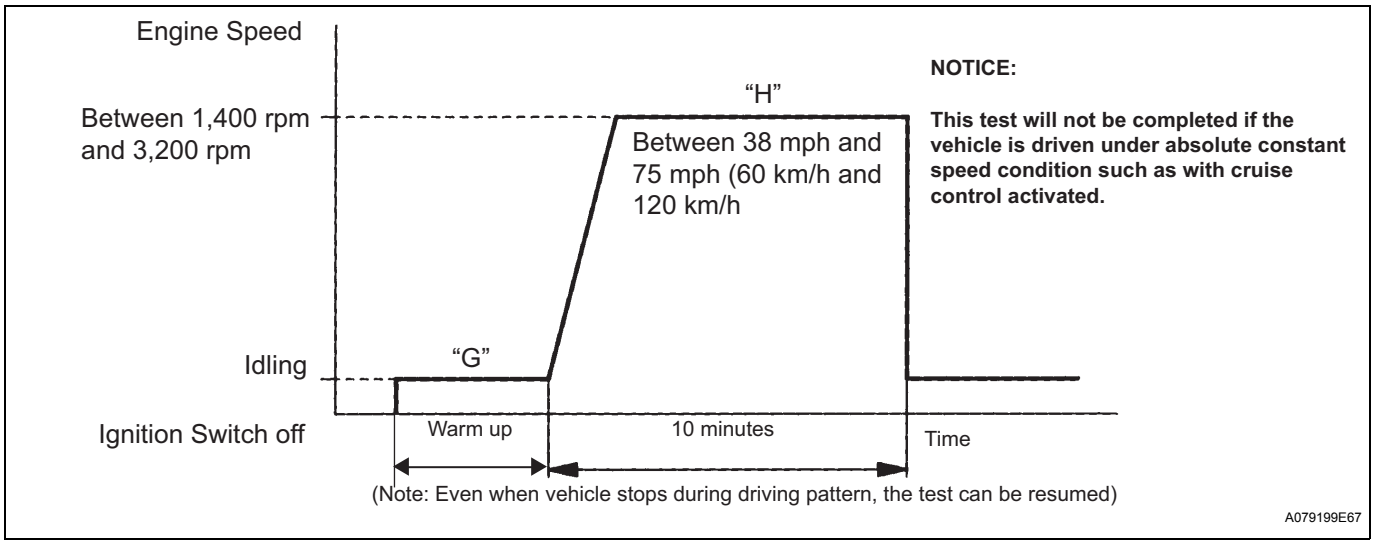

1. Connect the intelligent tester to the DLC3 (Procedure A).

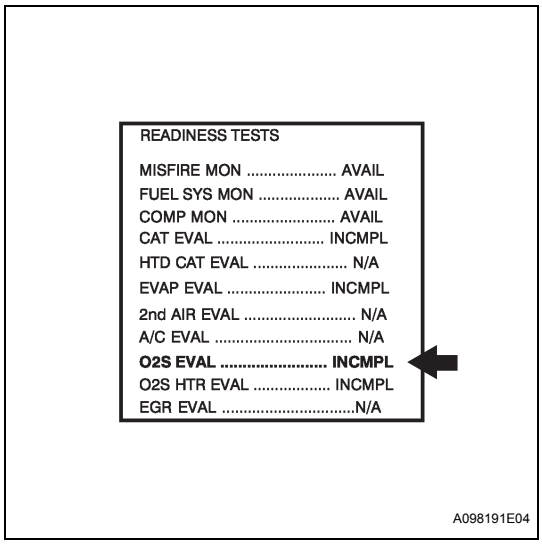

2. Turn the ignition switch on (IG) (Procedure B).
3. Turn the tester on (Procedure C).
4. Clear DTCs (where set) (See page ES-44) (Procedure D).
5. Select the following menu items: DIAGNOSIS / CARB OBD II / READINESS TESTS (Procedure E).
6. Check that O2S EVAL is INCMPL (incomplete) (Procedure F).
7. Start the engine and warm it up (Procedure G).
8. Drive the vehicle at between 38 mph and 75 mph (60 km/h and 120 km/h) for at least 10 minutes (Procedure H).
9. Note the state of the Readiness Tests items. Those items will change to COMPL (complete) as O2S EVAL monitor operates (Procedure I).
10. On the tester, select the following menu items: DIAGNOSIS / ENHANCED OBD II / DTC INFO / PENDING CODES and check if any DTCs (any pending DTCs) are set (Procedure J).
    HINT:
    If O2S EVAL does not change to COMPL, and any pending DTCs fail to set, extend the driving time.

INSPECTION PROCEDURE

HINT:

For use of the intelligent tester only:

Malfunctioning areas can be identified by performing the A/F CONTROL function provided in the ACTIVE TEST. The A/F CONTROL function can help to determine whether the Air-Fuel Ratio (A/F) sensor, Heated Oxygen (HO2) sensor and other potential trouble areas are malfunctioning.

The following instructions describe how to conduct the A/F CONTROL operation using the intelligent tester.

1. Connect the intelligent tester to the DLC3.
2. Start the engine and turn the tester on.
3. Warm up the engine at an engine speed of 2,500 rpm for approximately 90 seconds.
4. Select the following menu items on the tester: DIAGNOSIS / ENHANCED OBD II / ACTIVE TEST / A/F CONTROL.
5. Perform the A/F CONTROL operation with the engine in an idling condition (press the RIGHT or LEFT button to change the fuel injection volume).
6. Monitor the voltage outputs of the A/F and HO2 sensors (AFS B1S1 and O2S B1S2 or AFS B2S1 and O2S B2S2) displayed on the tester.

   HINT:

   - The A/F CONTROL operation lowers the fuel injection volume by 12.5% or increases the injection volume by 25%.
   - Each sensor reacts in accordance with increases and decreases in the fuel injection volume.

ES

Standard voltage

Tester Display (Sensor)	Injection Volumes	Status	Voltages
AFS B1S1 or AFS B2S1 (A/F)	+25%	Rich	Less than 3.0
AFS B1S1 or AFS B2S1 (A/F)	-12.5%	Lean	More than 3.35
O2S B1S2 or O2S B2S2 (HO2)	+25%	Rich	More than 0.55
O2S B1S2 or O2S B2S2 (HO2)	-12.5%	Lean	Less than 0.4

NOTICE:

The Air-Fuel Ratio (A/F) sensor has an output delay of a few seconds and the Heated Oxygen (HO2) sensor has a maximum output delay of approximately 20 seconds.

Case	A/F Sensor (Sensor 1) Output Voltage		HO2 Sensor (Sensor 2) Output Voltage		Main Suspected Trouble Area
1	Injection Volume +25% -12.5%		Injection Volume +25% -12.5%		-
	Output Voltage More than 3.35 V Less than 3.0 V	 OK	Output Voltage More than 0.55 V Less than 0.4 V	 OK	
2	Injection Volume +25% -12.5%		Injection Volume +25% -12.5%		• A/F sensor • A/F sensor heater • A/F sensor circuit
	Output Voltage Almost no reaction	NG	Output Voltage More than 0.55 V Less than 0.4 V	 OK	
3	Injection Volume +25% -12.5%		Injection Volume +25% -12.5%		• HO2 sensor • HO2 sensor heater • HO2 sensor circuit
	Output Voltage More than 3.35 V Less than 3.0 V	 OK	Output Voltage Almost no reaction	NG	

Case	A/F Sensor (Sensor 1) Output Voltage		HO2 Sensor (Sensor 2) Output Voltage		Main Suspected Trouble Area
4	Injection volume +25 % -12.5%		Injection Volume +25% -12.5%		• Injector • Fuel pressure • Gas leakage from exhaust system (Air-fuel ratio extremely lean or rich)
	Output Voltage Almost no reaction	 NG	Output Voltage Almost no reaction	 NG	

– Following the A/F CONTROL procedure enables technicians to check the graph of the voltage outputs of both the A/F and HO2 sensors.
– To display the graph, select the following menu items on the tester: DIAGNOSIS / ENHANCED OBD II / ACTIVE TEST / A/F CONTROL / USER DATA / AFS B1S1 and O2S B1S2 or AFS B2S1 and O2S B2S2. Press the YES button and then the ENTER button. Then press the F4 button.
HINT:
  • If other DTCs relating to different systems that have terminal E2 as the ground terminal are output simultaneously, terminal E2 may have an open circuit.
  • Read freeze frame data using the intelligent tester. The ECM records vehicle and driving condition information as freeze frame data the moment a DTC is stored. When troubleshooting, freeze frame data can be helpful in determining whether the vehicle was running or stopped, whether the engine was warmed up or not, whether the air/fuel ratio was lean or rich, as well as other data recorded at the time of a malfunction.
  • If the OX1B wire from the ECM connector is short-circuited to the +B wire, DTC P0136 will be set.
  • If the OX2B wire from the ECM connector is short-circuited to the +B wire, DTC P0156 will be set.

ES

1	READ DTC OUTPUT

(a) Connect the intelligent tester to the DLC3.
(b) Turn the ignition switch on (IG) and turn the tester on.
(c) Select the following menu items: DIAGNOSIS / ENHANCED OBD II / DTC INFO / CURRENT CODES.
(d) Read DTCs.

Result

Display (DTC Output)	Proceed to
P0138 or P0158	A
P0137 or P0157	B
P0136 or P0156	C

B → Go to step 14

C → Go to step 7

A

2	READ VALUE OF INTELLIGENT TESTER (OUTPUT VOLTAGE OF HEATED OXYGEN SENSOR)

(a) Connect the intelligent tester to the DLC3.
(b) Turn the ignition switch on (IG) and turn the tester on.

(c) Select the following menu items: DIAGNOSIS / ENHANCED OBD II / DATA LIST / PRIMARY / O2S B1S2 or O2S B2S2.
(d) Allow the engine to idle.
(e) Read the Heated Oxygen (HO2) sensor output voltage while idling.

Result

HO2 Sensor Output Voltages	Proceed to
More than 1.2 V	A
Less than 1.0 V	B

B → **Go to step 5**

A

3	CHECK HARNESS AND CONNECTOR (CHECK FOR SHORT)

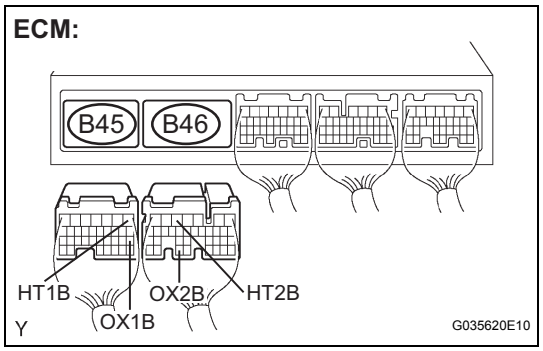

(a) Turn the ignition switch off and wait for 5 minutes.
(b) Disconnect the B45 or B46 ECM connector.
(c) Measure the resistance.
Standard resistance

Tester Connections	Specified Conditions
HT1B (B45-1) - OX1B (B45-18)	10 kΩ or higher
HT2B (B46-5) - OX2B (B46-33)	10 kΩ or higher

(d) Reconnect the ECM connector.

NG → **Go to step 4**

OK

REPLACE ECM

ES

4	INSPECT HEATED OXYGEN SENSOR (CHECK FOR SHORT)

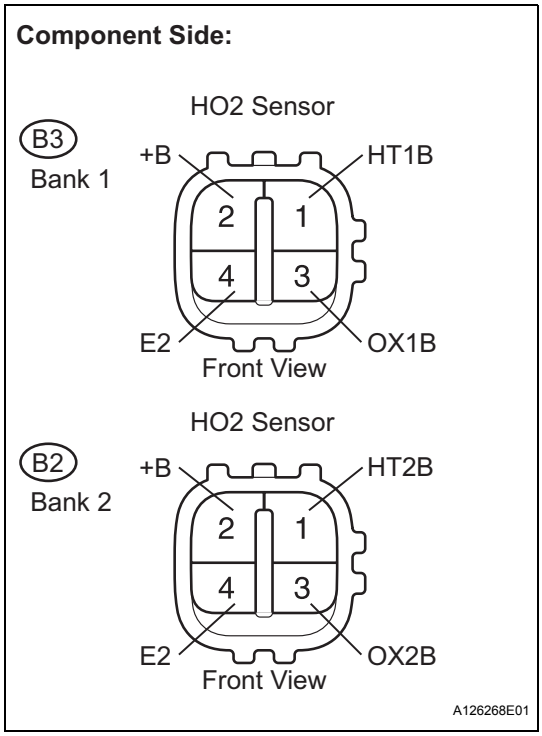

(a) Disconnect the B3 or B2 Heated Oxygen (HO2) sensor connector.
(b) Measure the resistance between the terminals of the HO2 sensor connector.
Standard resistance:
Bank 1

Tester Connections	Specified Conditions
+B (2) - E2 (4)	10 kΩ or higher
+B (2) - OX1B (3)	10 kΩ or higher

Bank 2:

Tester Connections	Specified Conditions
+B (2) - E2 (4)	10 kΩ or higher
+B (2) - OX2B (3)	10 kΩ or higher

(c) Reconnect the HO2 sensor connector.

NG → **REPLACE HEATED OXYGEN SENSOR**

OK

REPAIR OR REPLACE HARNESS OR CONNECTOR

5	PERFORM CONFIRMATION DRIVING PATTERN

(a) Perform confirmation driving pattern (See page ES-26).

NEXT

6	CHECK WHETHER DTC OUTPUT RECURS (DTC P0138 OR P0158)

(a) Connect the intelligent tester to the DLC3.
(b) Turn the ignition switch on (IG) and turn the tester on.
(c) Select the following menu items: DIAGNOSIS / ENHANCED OBD II / DTC INFO / CURRENT CODES.
(d) Read DTCs.

Result

Display (DTC Output)	Proceed to
P0138 or P0158	A
No output	B

B → **CHECK FOR INTERMITTENT PROBLEMS**

A

REPLACE HEATED OXYGEN SENSOR

7	**READ VALUE OF INTELLIGENT TESTER (OUTPUT VOLTAGE OF HEATED OXYGEN SENSOR)**

(a) Connect the intelligent tester to the DLC3.
(b) Turn the ignition switch on (IG) and turn the tester on.
(c) Start the engine.
(d) Select the following menu items: DIAGNOSIS / ENHANCED OBD II / DATA LIST / ALL / O2S B1S2 or O2S B1S2.
(e) After warming up the engine, run the engine at an engine speed of 2,500 rpm for 3 minutes.
(f) Read the output voltage of the HO2 sensor when the engine rpm is suddenly increased.
HINT:
Quickly accelerate the engine to 4,000 rpm 3 times using the accelerator pedal.
Standard:
Fluctuates between 0.4 V or less and 0.5 V or more.

ES

NG → **Go to step 14**

OK

8	**PERFORM CONFIRMATION DRIVING PATTERN**

(a) Perform confirmation driving pattern (See page ES-26).

NEXT

9	**CHECK WHETHER DTC OUTPUT RECURS (DTC P0136 OR P0156)**

(a) Connect the intelligent tester to the DLC3.
(b) Turn the ignition switch on (IG) and turn the tester on.
(c) Select the following menu items: DIAGNOSIS / ENHANCED OBD II / DTC INFO / CURRENT CODES.
(d) Read DTCs.

Result

Display (DTC Output)	Proceed to
P0136 or P0156	A
No output	B

B → **CHECK FOR INTERMITTENT PROBLEMS**

A

10	REPLACE HEATED OXYGEN SENSOR

(a) Replace the heated oxygen sensor (See page EC-22).

NEXT

11	PERFORM CONFIRMATION DRIVING PATTERN

(a) Perform confirmation driving pattern (See page ES-26).

NEXT

ES

12	CHECK WHETHER DTC OUTPUT RECURS (DTC P0136 OR P0156)

(a) Connect the intelligent tester to the DLC3.
(b) Turn the ignition switch on (IG) and turn the tester on.
(c) Select the following menu items: DIAGNOSIS / ENHANCED OBD II / DTC INFO / CURRENT CODES.
(d) Read DTCs.

Result

Display (DTC Output)	Proceed to
P0136 or P0156	A
No output	B

B → REPAIR COMPLETED

A

13	PERFORM ACTIVE TEST BY INTELLIGENT TESTER (INJECTION VOLUME)

(a) Connect the intelligent tester to the DLC3.
(b) Start the engine and turn the tester on.
(c) Warm up the engine.
(d) Select the following menu items: DIAGNOSIS / ENHANCED OBD II / ACTIVE TEST / INJ VOL.
(e) Change the fuel injection volume using the tester, monitoring the voltage output of Air-Fuel Ratio (A/F) and HO2 sensors displayed on the tester.
HINT:
- Change the fuel injection volume within the range of -12% and +12%. The injection volume can be changed in 1% graduations within the range.
- The A/F sensor is displayed as AFS B1S1 or AFS B2S1, and the HO2 sensor is displayed as O2S B1S2 or O2S B2S2, on the intelligent tester.

Result

Tester Display (Sensor)	Voltage Variations	Proceed to
AFS B1S1 (A/F) AFS B2S1 (A/F)	Alternates between more and less than 3.3 V	OK
AFS B1S1 (A/F) AFS B2S1 (A/F)	Remains at more than 3.3 V	NG

Tester Display (Sensor)	Voltage Variations	Proceed to
AFS B1S1 (A/F) AFS B2S1 (A/F)	Remains at less than 3.3 V	NG

HINT:
A normal HO2 sensor voltage (O2S B1S2 or O2S B2S2) reacts in accordance with increases and decreases in fuel injection volumes. When the A/F sensor voltage remains at either less or more than 3.3 V despite the HO2 sensor indicating a normal reaction, the A/F sensor is malfunctioning.

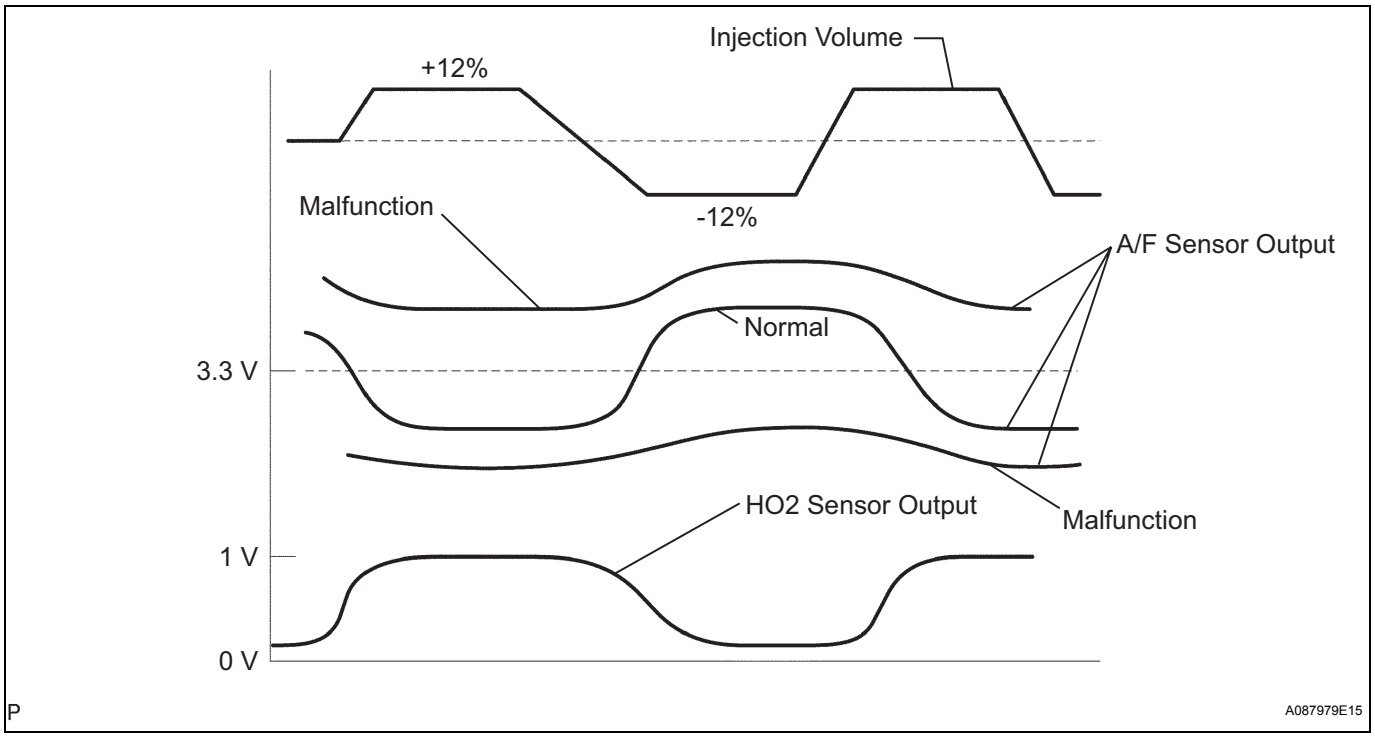

NG → REPLACE AIR FUEL RATIO SENSOR

OK

CHECK AND REPLACE EXTREMELY RICH OR LEAN ACTUAL AIR FUEL RATIO (INJECTOR, FUEL PRESSURE, GAS LEAKAGE FROM EXHAUST SYSTEM)

14	CHECK FOR EXHAUST GAS LEAKAGE

OK:
No gas leakage.

NG → REPAIR OR REPLACE EXHAUST GAS LEAKAGE POINT

OK

15 INSPECT HEATED OXYGEN SENSOR (HEATER RESISTANCE)

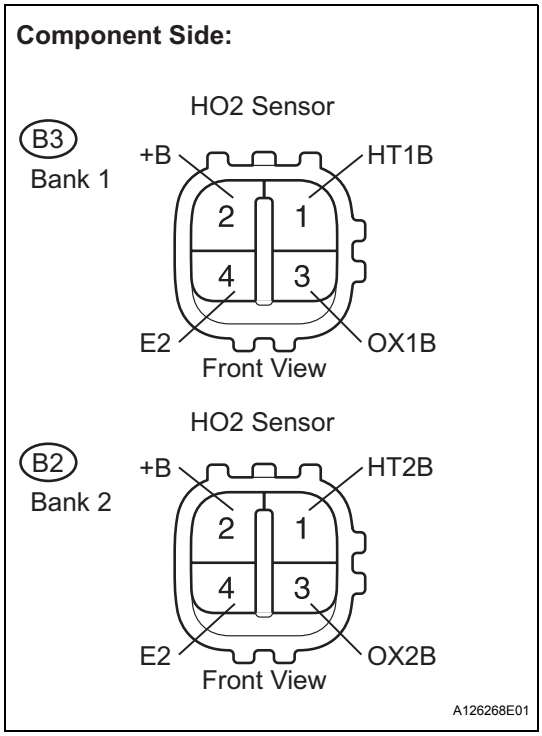

(a) Disconnect the B3 or B2 Heated Oxygen (HO2) sensor connector.
(b) Measure the resistance between the terminals of the HO2 sensor connector.
Standard resistance:
Bank 1

Tester Connections	Specified Conditions
HT1B (1) - +B (2)	11 to 16 Ω at 20°C (68°F)
HT1B (1) - E2 (4)	10 kΩ or higher

Bank 2

Tester Connections	Specified Conditions
HT2B (1) - +B (2)	11 to 16 Ω at 20°C (68°F)
HT2B (1) - E2 (4)	10 kΩ or higher

(c) Reconnect the HO2 sensor connector.

NG → **REPLACE HEATED OXYGEN SENSOR**

OK

16 INSPECT ENGINE ROOM JUNCTION BLOCK ASSEMBLY (EFI RELAY)

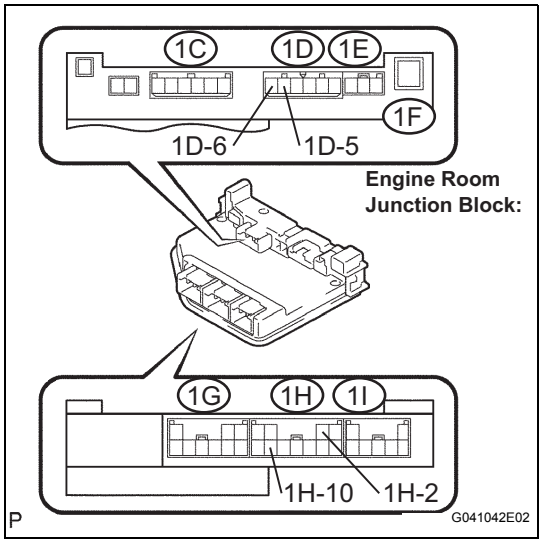

(a) Remove the engine room junction block.
(b) Measure the EFI relay resistance.
Standard resistance

Tester Connections	Specified Conditions
1D-5 - 1D-6	10 kΩ or higher
1D-5 - 1D-6	Below 1 Ω (when battery voltage applied to terminals 1H-10 and 1H-2)

NG → **REPLACE ENGINE ROOM JUNCTION BLOCK ASSEMBLY**

OK

17 CHECK HARNESS AND CONNECTOR (HEATED OXYGEN SENSOR - ECM)

Wire Harness Side:

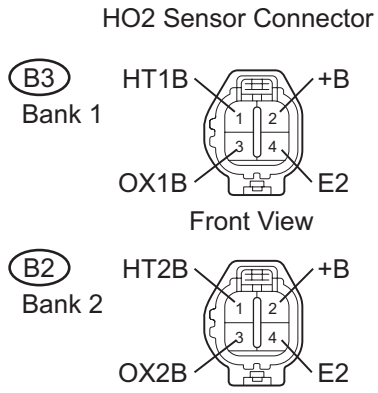

ECM:

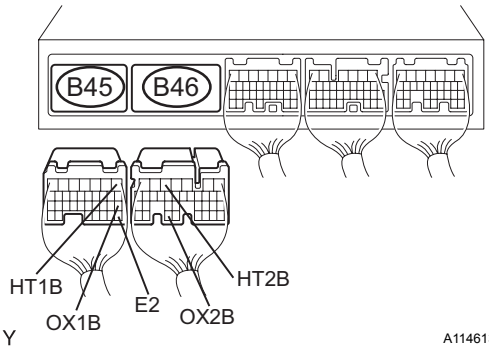

(a) Disconnect the B2 or B3 HO2 sensor connector.
(b) Turn the ignition switch on (IG).
(c) Measure the voltage between the +B terminal of the HO2 sensor connector and body ground.

Standard voltage

Tester Connections	Specified Conditions
+B (B3-2) - Body ground	9 V to 14 V
+B (B3-2) - Body ground	9 V to 14 V

(d) Turn the ignition switch off.
(e) Disconnect the B45 and B46 ECM connectors.
(f) Measure the resistance.

Standard resistance (Check for open)

Tester Connections	Specified Conditions
HT1B (B3-1) - HT1B (B45-1)	Below 1 Ω
OX1B (B3-3) - OX1B (B45-18)	Below 1 Ω
E2 (B3-4) - E2 (B45-28)	Below 1 Ω
HT2B (B2-1) - HT2B (B46-5)	Below 1 Ω
OX2B (B2-3) - OX2B (B46-33)	Below 1 Ω
E2 (B2-4) - E2 (B45-28)	Below 1 Ω

Standard resistance (Check for short)

Tester Connections	Specified Conditions
HT1B (B3-1) or HT1B (B45-1) - Body ground	10 kΩ or higher
OX1B (B3-3) or OX1B (B45-18) - Body ground	10 kΩ or higher
E2 (B3-4) or E2 (B45-28) - Body ground	10 kΩ or higher
HT2B (B2-1) or HT2B (B46-5) - Body ground	10 kΩ or higher
OX2B (B2-3) or OX2B (B46-33) - Body ground	10 kΩ or higher
E2 (B2-4) or E2 (B45-28) - Body ground	10 kΩ or higher

(g) Reconnect the HO2 sensor connector.
(h) Reconnect the ECM connectors.

Reference (System Diagram of Bank 1 Sensor 2):

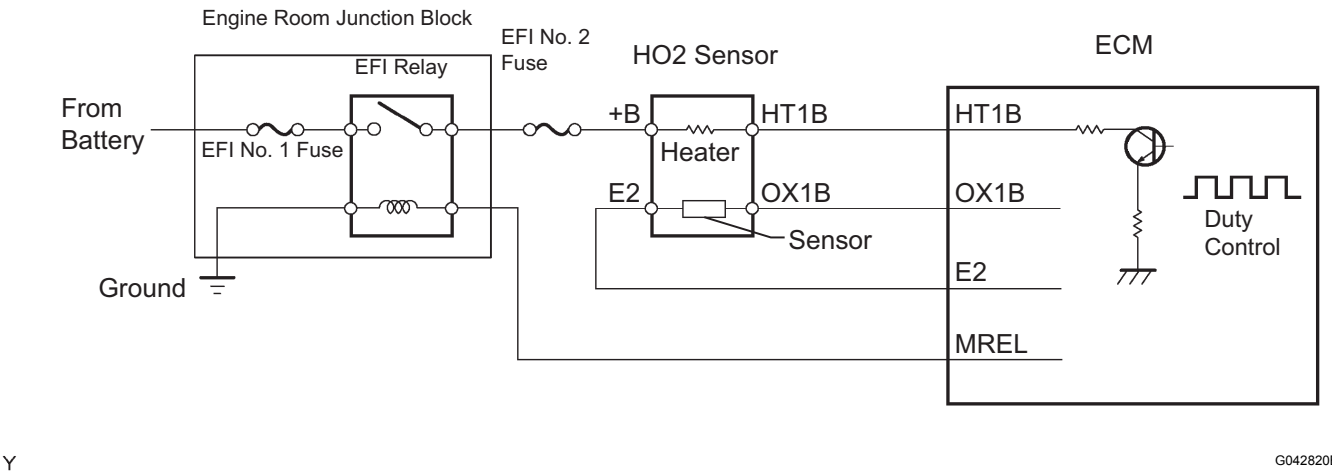

NG → REPAIR OR REPLACE HARNESS OR CONNECTOR

OK

REPLACE HEATED OXYGEN SENSOR

DTC	P0171	System Too Lean (Bank 1)

DTC	P0172	System Too Rich (Bank 1)

DTC	P0174	System Too Lean (Bank 2)

DTC	P0175	System Too Rich (Bank 2)

DESCRIPTION

The fuel trim is related to the feedback compensation value, not to the basic injection time. The fuel trim consists of both the short-term and long-term fuel trims.

The short-term fuel trim is fuel compensation that is used to constantly maintain the air-fuel ratio at stoichiometric levels. The signal from the Air-Fuel Ratio (A/F) sensor indicates whether the air-fuel ratio is rich or lean compared to the stoichiometric ratio. This triggers a reduction in the fuel injection volume if the air-fuel ratio is rich and an increase in the fuel injection volume if it is lean.

Factors such as individual engine differences, wear over time and changes in operating environment cause short-term fuel trim to vary from the central value. The long-term fuel trim, which controls overall fuel compensation, compensates for long-term deviations in the fuel trim from the central value caused by the short- term fuel trim compensation.

If both the short-term and long-term fuel trims are lean or rich beyond predetermined values, it is interpreted as a malfunction, and the ECM illuminates the MIL and sets a DTC.

DTC No.	DTC Detection Conditions	Trouble Areas
P0171 P0174	With warm engine and stable air-fuel ratio feedback, fuel trim considerably in error to lean side (2 trip detection logic)	• Air induction system • Injector blockage • Mass Air Flow (MAF) meter • Engine Coolant Temperature (ECT) sensor • Fuel pressure • Gas leakage from exhaust system • Open or short in A/F sensor (bank 1, 2 sensor 1) circuit • A/F sensor (bank 1, 2 sensor 1) • A/F sensor heater (bank 1, 2 sensor 1) • A/F sensor heater relay • A/F sensor heater and A/F sensor heater relay circuits • PCV valve and hose • PCV hose connections • ECM
P0172 P0175	With warm engine and stable air-fuel ratio feedback, fuel trim considerably in error to rich side (2 trip detection logic)	• Injector leakage or blockage • MAF meter • ECT sensor • Ignition system • Fuel pressure • Gas leakage from exhaust system • Open or short in A/F sensor (bank 1, 2 sensor 1) circuit • A/F sensor (bank 1, 2 sensor 1) • A/F sensor heater (bank 1, 2 sensor 1) • A/F sensor heater relay • A/F sensor heater and A/F sensor heater relay circuits • ECM

HINT:

- When DTC P0171 or P0174 is set, the actual air-fuel ratio is on the lean side. When DTC P0172 P0175 is set, the actual air-fuel ratio is on the rich side.
- If the vehicle runs out of fuel, the air-fuel ratio is lean and DTC P0171 or P0174 may be set. The MIL is then illuminated.

- When the total of the short-term and long-term fuel trim values is within the malfunction threshold (and the engine coolant temperature is more than 75°C [167°F]), the system is functioning normally.

MONITOR DESCRIPTION

Under closed-loop fuel control, fuel injection volumes that deviate from those estimated by the ECM cause changes in the long-term fuel trim compensation value. The long-term fuel trim is adjusted when there are persistent deviations in the short-term fuel trim values. Deviations from the ECM's estimated fuel injection volumes also affect the average fuel trim learning value, which is a combination of the average short-term fuel trim (fuel feedback compensation value) and the average long-term fuel trim (learning value of the air-fuel ratio). If the average fuel trim learning value exceeds the malfunction thresholds, the ECM interprets this a fault in the fuel system and sets a DTC.

Example:

ES

The average fuel trim learning value is more than +35% or less than -35%, the ECM interprets this as a fuel system malfunction.

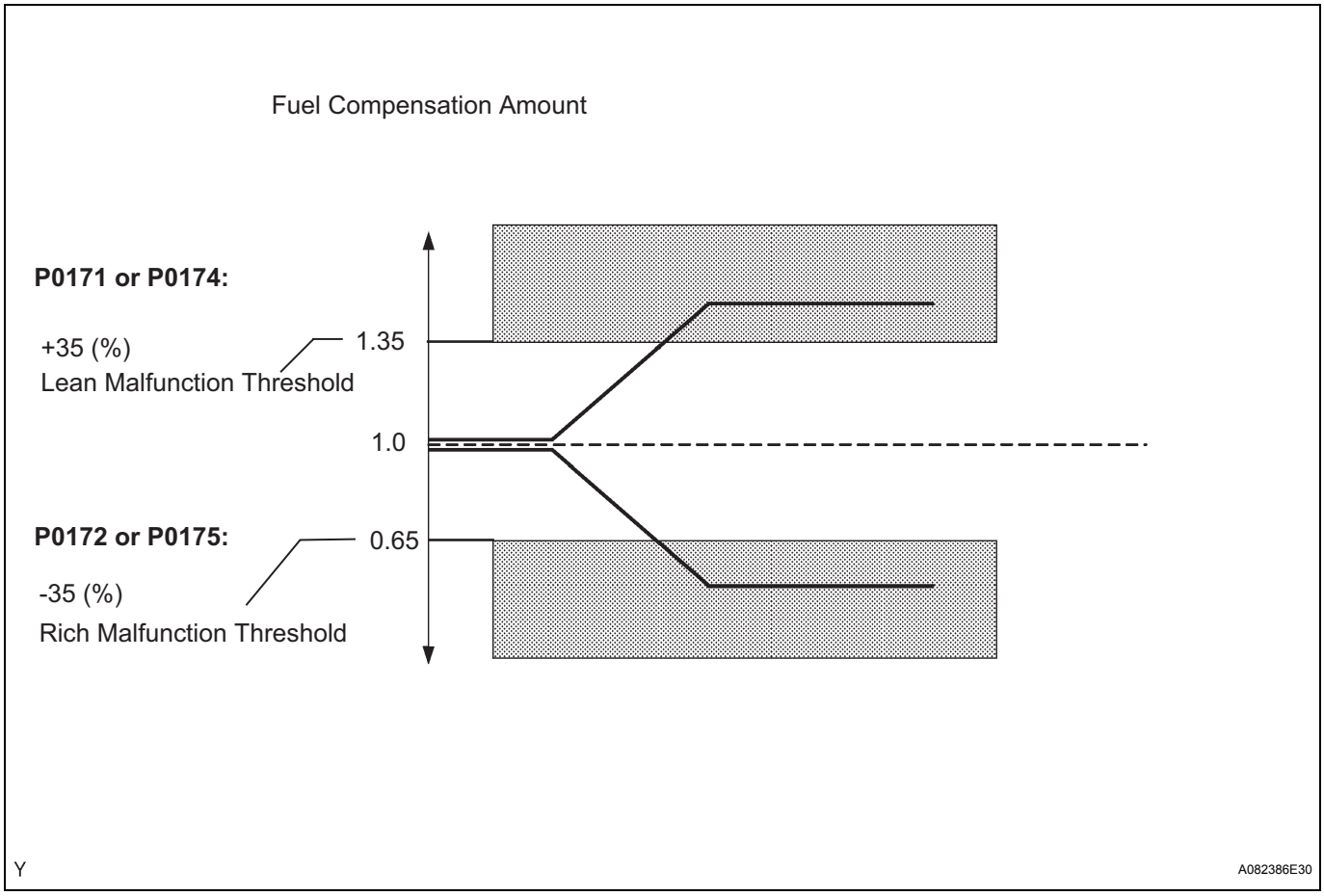

MONITOR STRATEGY

Related DTCs	P0171: Fuel trim Lean (Bank 1) P0172: Fuel trim Rich (Bank 1) P0174: Fuel trim Lean (Bank 2) P0175: Fuel trim Rich (Bank 2)
Required Sensors / Components (Main)	Fuel system
Required Sensors / Components (Related)	A/F sensor, Mass air flow meter, Crankshaft position sensor
Frequency of Operation	Continuous
Duration	Less than 10 seconds
MIL Operation	2 driving cycles
Sequence of Operation	None

TYPICAL ENABLING CONDITIONS

Fuel-trim:

The monitor will run whenever these DTCs are not present	P0010, P0020 (VVT VSV1, 2), P0011, P0012 (VVT System-Advance, Retard), P0021, P0022(VVT System2-Adavance, Retard), P0031, P0031, P0032, P0051, P0052 (A/F Sensor heater Sensor 1), P0100, P0101, P0102, P0103 (MAF Sensor), P0115, P0116, P0117, P0118 (ECT Sensor), P0120, P0121, P0122, P0123, P0220, P0222, P0223 , P2135 (TP Sensor), P0125 (Insufficient ECT for Closed Loop), P0335 (CKP Sensor), P0340, P0342, P0343, P0345 (VVT Sensor 1, 2), P0351, P0352, P0353, P0354, P0356 (Ignitor), P0500 (VSS),
Fuel system status	Closed-loop
Battery voltage	11 V or more
Either of following conditions met	Condition 1 or 2
1. Engine RPM	Below 1,100 rpm
2. Intake air amount per revolution	0.22 g/rev or more
Catalyst monitor	No executed

ES

TYPICAL MALFUNCTION THRESHOLDS

Fuel trim:

Purge-cut	Executing
Either of following conditions met	Condition 1 or 2
1. Average between short-term fuel trim and long-term fuel trim	35% or more at 80°C (176°F) of ECT
2. Average between short-term fuel trim and long-term fuel trim	-35% or less at 80°C (176°F) of ECT

WIRING DIAGRAM

Refer to DTC P2195 (See page ES-317).

INSPECTION PROCEDURE

HINT:

For use of the intelligent tester only:

Malfunctioning areas can be identified by performing the A/F CONTROL function provided in the ACTIVE TEST. The A/F CONTROL function can help to determine whether the Air-Fuel Ratio (A/F) sensor, Heated Oxygen (HO2) sensor and other potential trouble areas are malfunctioning.

The following instructions describe how to conduct the A/F CONTROL operation using the intelligent tester.

1. Connect the intelligent tester to the DLC3.
2. Start the engine and turn the tester on.
3. Warm up the engine at an engine speed of 2,500 rpm for approximately 90 seconds.
4. Select the following menu items on the tester: DIAGNOSIS / ENHANCEDOBD II / ACTIVE TEST / A/F CONTROL.
5. Perform the A/F CONTROL operation with the engine in an idling condition (press the RIGHT or LEFT button to change the fuel injection volume).
6. Monitor the voltage outputs of the A/F and HO2 sensors (AFS B1S1 and O2S B1S2 or AFS B2S1 and O2S B2S2) displayed on the tester.

   HINT:

   - The A/F CONTROL operation lowers the fuel injection volume by 12.5% or increases the injection volume by 25%.
   - Each sensor reacts in accordance with increases and decreases in the fuel injection volume.

Standard voltage

Tester Display (Sensor)	Injection Volumes	Status	Voltages
AFS B1S1 or AFS B2S1 (A/F)	+25%	Rich	Less than 3.0

Tester Display (Sensor)	Injection Volumes	Status	Voltages
AFS B1S1 or AFS B2S1 (A/F)	-12.5%	Lean	More than 3.35
O2S B1S2 or O2S B2S2 (HO2)	+25%	Rich	More than 0.55
O2S B1S2 or O2S B2S2 (HO2)	-12.5%	Lean	Less than 0.4

NOTICE:
The Air-Fuel Ratio (A/F) sensor has an output delay of a few seconds and the Heated Oxygen (HO2) sensor has a maximum output delay of approximately 20 seconds.

Case	A/F Sensor (Sensor 1) Output Voltage		HO2 Sensor (Sensor 2) Output Voltage		Main Suspected Trouble Area
1	Injection Volume +25% -12.5%		Injection Volume +25% -12.5%		-
	Output Voltage More than 3.35 V Less than 3.0 V		Output Voltage More than 0.55 V Less than 0.4 V		
2	Injection Volume +25% -12.5%		Injection Volume +25% -12.5%		• A/F sensor • A/F sensor heater • A/F sensor circuit
	Output Voltage Almost no reaction		Output Voltage More than 0.55 V Less than 0.4 V		
3	Injection Volume +25% -12.5%		Injection Volume +25% -12.5%		• HO2 sensor • HO2 sensor heater • HO2 sensor circuit
	Output Voltage More than 3.35 V Less than 3.0 V		Output Voltage Almost no reaction		
4	Injection volume +25% -12.5%		Injection Volume +25% -12.5%		• Injector • Fuel pressure • Gas leakage from exhaust system (Air-fuel ratio extremely lean or rich)
	Output Voltage Almost no reaction		Output Voltage Almost no reaction		

ES

– Following the A/F CONTROL procedure enables technicians to check the graph of the voltage outputs of both the A/F and HO2 sensors.
– To display the graph, select the following menu items on the tester: DIAGNOSIS / ENHANCED OBD II / ACTIVE TEST / A/F CONTROL / USER DATA / AFS B1S1 and O2S B1S2 or AFS B2S1 and O2S B2S2. Press the YES button and then the ENTER button. Then press the F4 button.
HINT:
  - Read freeze frame data using the intelligent tester. The ECM records vehicle and driving condition information as freeze frame data the moment a DTC is stored. When troubleshooting, freeze frame data can be helpful in determining whether the vehicle was running or stopped, whether the engine was warmed up or not, whether the air/fuel ratio was lean or rich, as well as other data recorded at the time of a malfunction.
  - A low A/F sensor voltage could be caused by a rich air-fuel mixture. Check for conditions that would cause the engine to run rich.
  - A high A/F sensor voltage could be caused by a lean air-fuel mixture. Check for conditions that would cause the engine to run lean.

1	CHECK ANY OTHER DTCS OUTPUT (IN ADDITION TO DTC P0171, P0172, P0174 OR P0175)

(a) Connect the intelligent tester to the DLC3.
(b) Turn the ignition switch on (IG) and turn the tester on.
(c) Select the following menu items: DIAGNOSIS / ENHANCED OBD II / DTC INFO / CURRENT CODES.
(d) Read DTCs.

Result

Display (DTC Output)	Proceed to
P0171, P0172, P0174 or P0175	A
P0171, P0172, P0174 or P0175 and other DTCs	B

ES

HINT:
If any DTCs other than P0171, P0172, P0174 or P0175 are output, troubleshoot those DTCs first.

B → GO TO DTC CHART

A

2	CHECK PCV HOSE CONNECTIONS

OK:
PCV hose is connected correctly and is not damaged.

NG → REPAIR OR REPLACE PCV HOSE

OK

3	CHECK AIR INDUCTION SYSTEM

(a) Check the air induction system for vacuum leakage.
OK:
No leakage from air induction system.

NG → REPAIR OR REPLACE AIR INDUCTION SYSTEM

OK

4	PERFORM ACTIVE TEST BY INTELLIGENT TESTER (A/F CONTROL)

(a) Connect the intelligent tester to the DLC3.
(b) Start the engine and turn the tester on.
(c) Warm up the engine at an engine speed of 2,500 rpm for approximately 90 seconds.
(d) Select the following menu items on the tester: DIAGNOSIS / ENHANCED OBD II / ACTIVE TEST / A/F CONTROL.
(e) Perform the A/F CONTROL operation with the engine in an idling condition (press the RIGHT or LEFT button to change the fuel injection volume).

(f) Monitor the voltage outputs of A/F and HO2 sensors (AFS B1S1 and O2S B1S2 or AFS B2S1 and O2S B2S2) displayed on the tester.
HINT:
- The A/F CONTROL operation lowers the fuel injection volume by 12.5% or increases the injection volume by 25%.
- Each sensor reacts in accordance with increases and decreases in the fuel injection volume.

Standard voltage

Tester Display (Sensor)	Injection Volumes	Status	Voltages
AFS B1S1 or AFS B2S1 (A/F)	+25%	Rich	Less than 3.0
AFS B1S1 or AFS B2S1 (A/F)	-12.5%	Lean	More than 3.35
O2S B1S2 or O2S B2S2 (HO2)	+25%	Rich	More than 0.55
O2S B1S2 or O2S B2S2 (HO2)	-12.5%	Lean	Less than 0.4

ES

Result

Status AFS B1S1 or AFS B2S1	Status O2S B1S2 or O2S B2S2	A/F Condition and A/F Sensor Condition	Misfires	Suspected Trouble Areas	Proceed to
Lean/Rich	Lean/Rich	Normal	-	-	C
Lean	Lean	Actual air-fuel ratio lean	May occur	• PCV valve and hose • PCV hose connections • Injector blockage • Gas leakage from exhaust system • Air induction system • Fuel pressure • Mass Air Flow (MAF) meter • Engine Coolant Temperature (ECT) sensor	A
Rich	Rich	Actual air-fuel ratio rich	-	• Injector leakage or blockage • Gas leakage from exhaust system • Ignition system • Fuel pressure • MAF meter • ECT sensor	A
Lean	Lean/Rich	A/F sensor malfunction	-	A/F sensor	B
Rich	Lean/Rich	A/F sensor malfunction	-	A/F sensor	B

Lean: During A/F CONTROL, the A/F sensor output voltage (AFS) is consistently more than 3.35 V, and the HO2 sensor output voltage (O2S) is consistently less than 0.4 V.
Rich: During A/F CONTROL, the AFS is consistently less than 3.0 V, and the O2S is consistently more than 0.55 V.
Lean/Rich: During A/F CONTROL of the ACTIVE TEST, the output voltage of the heated oxygen sensor alternates correctly.

B	Go to step 11
C	Go to step 15

A

5	READ VALUE OF INTELLIGENT TESTER (COOLANT TEMP)

(a) Connect the intelligent tester to the DLC3.
(b) Turn the ignition switch on (IG) and turn the tester on.
(c) Select the following menu items: DIAGNOSIS / ENHANCED OBD II / DATA LIST / PRIMARY / COOLANT TEMP.
(d) Read the COOLANT TEMP twice, when the engine is both cold and warmed up.
Standard:
With cold engine:
Same as ambient air temperature.
With warm engine:
Between 75°C and 95°C (167°F and 203°F)

ES

NG → **REPLACE ENGINE COOLANT TEMPERATURE SENSOR**

OK

6	READ VALUE OF INTELLIGENT TESTER (MAF)

(a) Connect the intelligent tester to the DLC3.
(b) Turn the ignition switch on (IG) and turn the tester on.
(c) Select the following menu items: DIAGNOSIS / ENHANCED OBD II / DATA LIST / PRIMARY / MAF and COOLANT TEMP.
(d) Allow the engine to idle until the COOLANT TEMP reaches 75°C (167°F) or more.
(e) Read the MAF with the engine in an idling condition and at an engine speed of 2,500 rpm.
Standard:
MAF while engine idling:
Between 3.2 g/s and 4.7 g/s (shift position: N, A/C: OFF).
MAF at engine speed of 2,500 rpm:
Between 13.1 g/s and 18.9 g/s (shift position: N, A/C: OFF).

NG → **REPLACE MASS AIR FLOW METER**

OK

7	CHECK FUEL PRESSURE

(a) Check the fuel pressure (See page FU-7).

NG → **REPAIR OR REPLACE FUEL SYSTEM**

OK

8	CHECK FOR EXHAUST GAS LEAKAGE

OK:
No gas leakage.

NG → **REPAIR OR REPLACE EXHAUST SYSTEM**

OK

9	CHECK FOR SPARKS AND IGNITION

ES

(a) Check for sparks and ignition (See page IG-4).
HINT:
If the spark plugs or ignition system malfunctions, engine misfire may occur. The misfire count can be read using the intelligent tester. Select the following menu items: DIAGNOSIS / ENHANCED OBD II / DATA LIST / PRIMARY / CYL #1 (to CYL #6).

NG → **REPAIR OR REPLACE IGNITION SYSTEM**

OK

10	INSPECT FUEL INJECTOR ASSEMBLY (INJECTION AND VOLUME)

(a) Inspect the fuel injector assembly (See page FU-15).
HINT:
If the injectors malfunction, engine misfire may occur. The misfire count can be read using the intelligent tester. Select the following menu items: DIAGNOSIS / ENHANCED OBD II / DATA LIST / PRIMARY / CYL #1 (to CYL #6).

NG → **REPLACE FUEL INJECTOR ASSEMBLY**

OK

11 INSPECT AIR FUEL RATIO SENSOR (HEATER RESISTANCE)

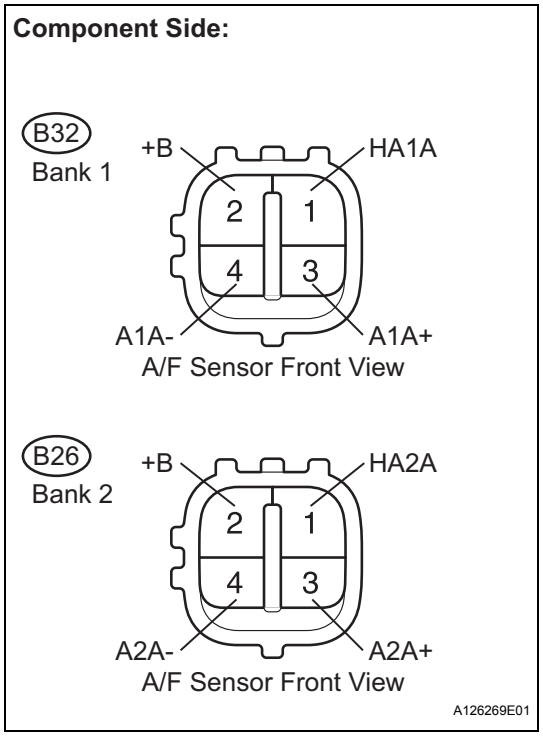

(a) Disconnect the B26 or B32 A/F sensor connector.
(b) Measure the resistance between the terminals of the A/F sensor connector.
Standard resistance:
Bank 1

Tester Connections	Specified Conditions
HA1A (1) - +B (2)	1.8 to 3.4 Ω at 20°C (68°F)
HA1A (1) - A1A- (4)	10 kΩ or higher

Bank 2

Tester Connections	Specified Conditions
HA2A (1) - +B (2)	1.8 to 3.4 Ω at 20°C (68°F)
HA2A (1) - A2A- (4)	10 kΩ or higher

(c) Reconnect the A/F sensor connector.

NG → REPLACE AIR FUEL RATIO SENSOR

OK

12 INSPECT ENGINE ROOM JUNCTION BLOCK ASSEMBLY (A/F SENSOR HEATER RELAY)

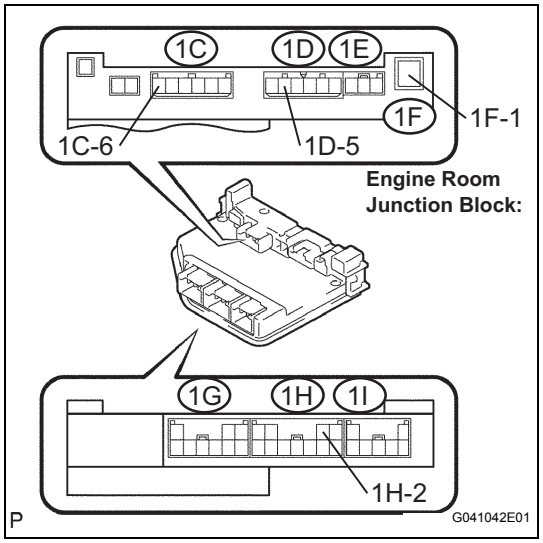

(a) Remove the engine room junction block.
(b) Measure the A/F sensor heater relay resistance.
Standard resistance

Tester Connections	Specified Conditions
1F-1 - 1C-6	10 kΩ or higher
1F-1 - 1C-6	Below 1 Ω (when battery voltage applied to terminals 1D-5 and 1H-2)

NG → REPLACE ENGINE ROOM JUNCTION BLOCK ASSEMBLY

OK

13	CHECK HARNESS AND CONNECTOR (A/F SENSOR - ECM)

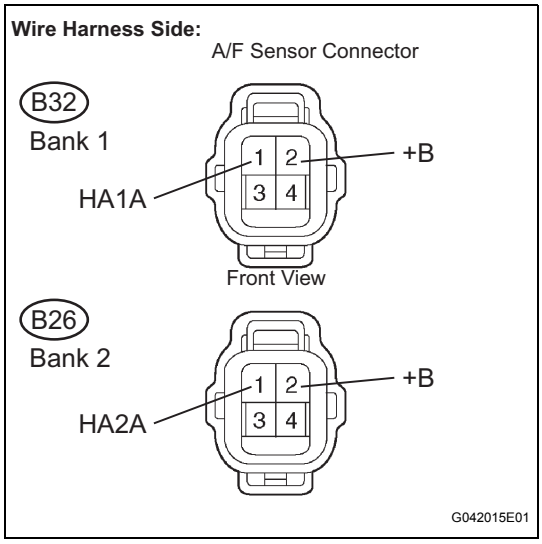

(a) Disconnect the B32 or B26 A/F sensor connector.
(b) Turn the ignition switch on (IG).
(c) Measure the voltage between the +B terminal of the A/F sensor connector and body ground.

Standard voltage

Tester Connections	Specified Conditions
+B (B32-2) - Body ground	9 to 14 V
+B (B26-2) - Body ground	9 to 14 V

(d) Turn the ignition switch off.

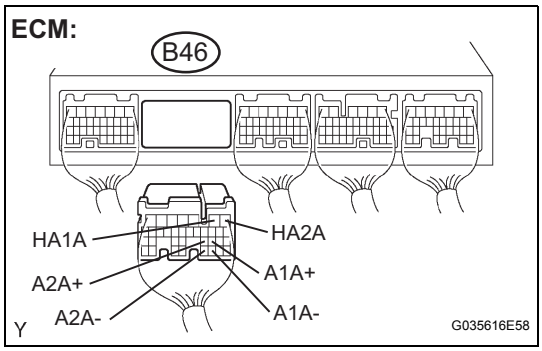

(e) Disconnect the B46 ECM connector.
(f) Measure the resistance.

Standard resistance (Check for open)

Tester Connections	Specified Conditions
HA1A (B32-1) - HA1A (B46-2)	Below 1 Ω
A1A+ (B32-3) - A1A+ (B46-22)	Below 1 Ω
A1A- (B32-4) - A1A- (B46-30)	Below 1 Ω
HA2A (B26-1) - HA2A (B46-1)	Below 1 Ω
A2A+ (B26-3) - A2A+ (B46-23)	Below 1 Ω
A2A- (B26-4) - A2A- (B46-31)	Below 1 Ω

Standard resistance (Check for short)

Tester Connections	Specified Conditions
HA1A (B32-1) or HA1A (B46-2) - Body ground	10 kΩ or higher
A1A+ (B32-3) or A1A+ (B46-22) - Body ground	10 kΩ or higher
A1A- (B32-4) or A1A- (B46-30) - Body ground	10 kΩ or higher
HA2A (B26-1) or HA2A (B46-1) - Body ground	10 kΩ or higher
A2A+ (B26-3) or A2A+ (B46-23) - Body ground	10 kΩ or higher
A2A- (B26-4) or A2A- (B46-31) - Body ground	10 kΩ or higher

(g) Reconnect the ECM connector.
(h) Reconnect the A/F sensor connector.

ES

Reference (System Diagram of Bank 1 Sensor 1):

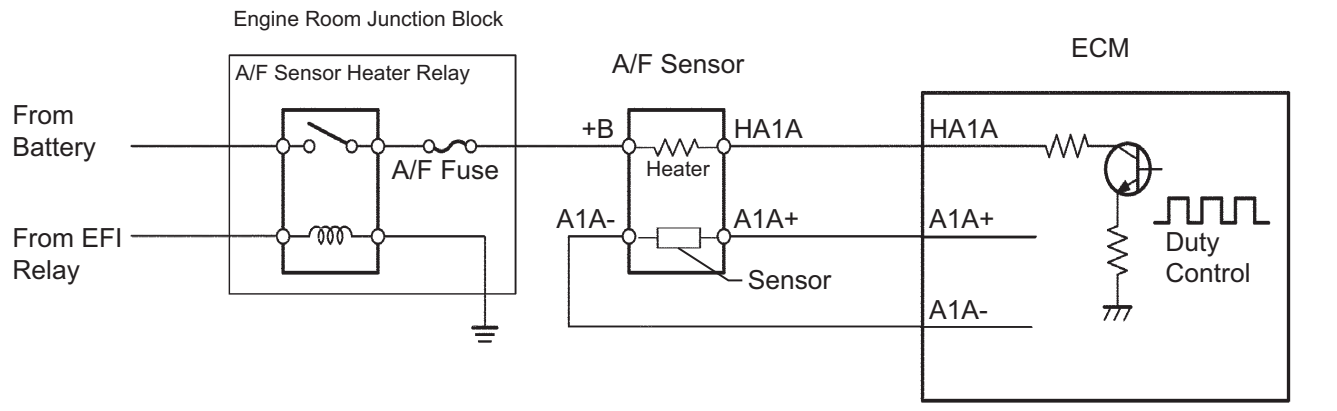

ES

NG → **REPAIR OR REPLACE HARNESS OR CONNECTOR**

OK

14	REPLACE AIR FUEL RATIO SENSOR

NEXT

15	PERFORM CONFIRMATION DRIVING PATTERN

(a) Connect the intelligent tester to the DLC3 (Procedure A).
(b) Turn the ignition switch on (IG) and turn the tester on (Procedure B).
(c) Clear DTCs (See page ES-44) (Procedure C).
(d) Select the check mode using the tester (See page ES-48) (Procedure D).
(e) Start the engine and warm it up with all the accessories switched off (Procedure E).
(f) Drive the vehicle at between 38 mph and 75 mph (60 km/h and 120 km/h) and at an engine speed of between 1,400 rpm and 3,200 rpm for 3 to 5 minutes (Procedure F).

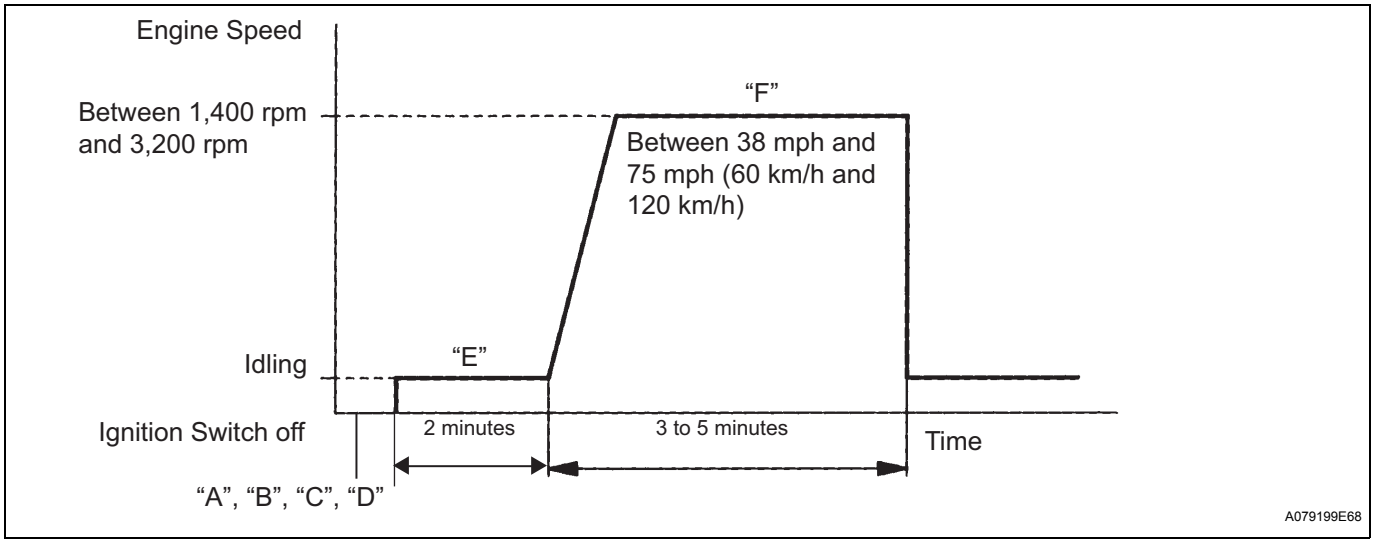

HINT:
If the system is still malfunctioning, the MIL will be illuminated during procedure "F".
NOTICE:
If the conditions in this test are not strictly followed, no malfunction will be detected.

NEXT

16	CHECK WHETHER DTC OUTPUT RECURS (DTC P0171, P0172, P0174 OR P0175)

(a) Select the following menu items: DIAGNOSIS / ENHANCED OBD II / DTC INFO / PENDING CODES.
(b) Read DTCs.

Result

Display (DTC Output)	Proceed to
No output	A
P0171, P0172, P0174 or P0175	B

B → **Go to step 5**

A

END

DTC	P0300	Random / Multiple Cylinder Misfire Detected

DTC	P0301	Cylinder 1 Misfire Detected

DTC	P0302	Cylinder 2 Misfire Detected

DTC	P0303	Cylinder 3 Misfire Detected

DTC	P0304	Cylinder 4 Misfire Detected

DTC	P0305	Cylinder 5 Misfire Detected

DTC	P0306	Cylinder 6 Misfire Detected

DESCRIPTION

When the engine misfires, high concentrations of hydrocarbons (HC) enter the exhaust gas. Extremely high HC concentration levels can cause increase in exhaust emission levels. High concentrations of HC can also cause increases in the Three-Way Catalytic Converter (TWC) temperature, which may cause damage to the TWC. To prevent this increase in emissions and to limit the possibility of thermal damage, the ECM monitors the misfire rate. When the temperature of the TWC reaches the point of thermal degradation, the ECM blinks the MIL. To monitor misfires, the ECM uses both the Camshaft Position (CMP) sensor and the Crankshaft Position (CKP) sensor. The CMP sensor is used to identify any misfiring cylinders and the CKP sensor is used to measure variations in the crankshaft rotation speed. Misfires are counted when the crankshaft rotation speed variations exceed predetermined thresholds. If the misfire exceeds the threshold levels, and could cause emission deterioration, the ECM illuminates the MIL and sets a DTC.

DTC No.	DTC Detection Conditions	Trouble Areas
P0300	Simultaneous misfiring of several cylinders are detected (2 trip detection logic)	• Open or short in engine wire harness • Connector connections • Vacuum hose connections • Ignition system • Injector • Fuel pressure • Mass Air Flow (MAF) meter • Engine Coolant Temperature (ECT) sensor • Compression pressure • Valve clearance • Valve timing • PCV hose • PCV • Air induction system • ECM

DTC No.	DTC Detection Conditions	Trouble Areas
P0301 P0302 P0303 P0304 P0305 P0306	Misfiring of specific cylinder is detected (2 trip detection logic)	• Open or short in engine wire harness • Connector connections • Vacuum hose connections • Ignition system • Injector • Fuel pressure • MAF meter • ECT sensor • Compression pressure • Valve clearance • Valve timing • PCV hose • PCV • Air induction system • ECM

ES

HINT:
When DTCs for misfiring cylinders are randomly set, but DTC P0300 is not set, it indicates that misfires have been detected in different cylinders at different times. DTC P0300 is only set when several misfiring cylinders are detected at the same time.
Reference: Inspection using an oscilloscope
With the engine idling, check the waveform between terminals #10 to #60 and E01 of the ECM connectors.

Items	Contents
Terminals	#10 to #60 - E01
Equipment Settings	20 V/Division, 100 or 1 ms/Division
Conditions	Idling

HINT:
The correct waveform is as shown.

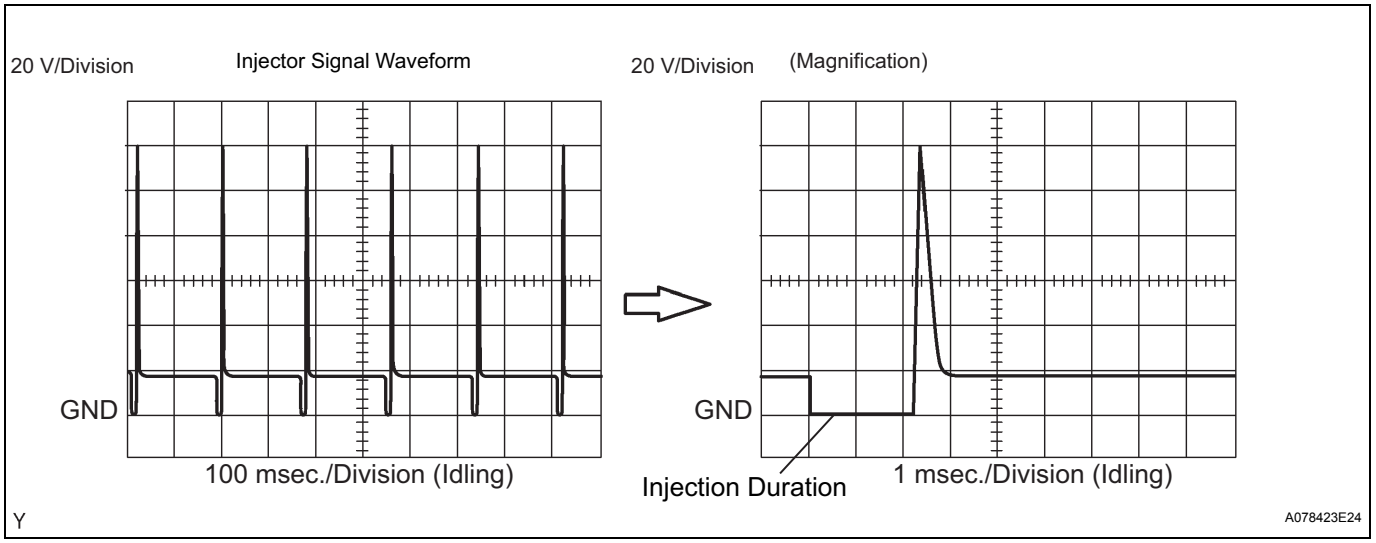

MONITOR DESCRIPTION

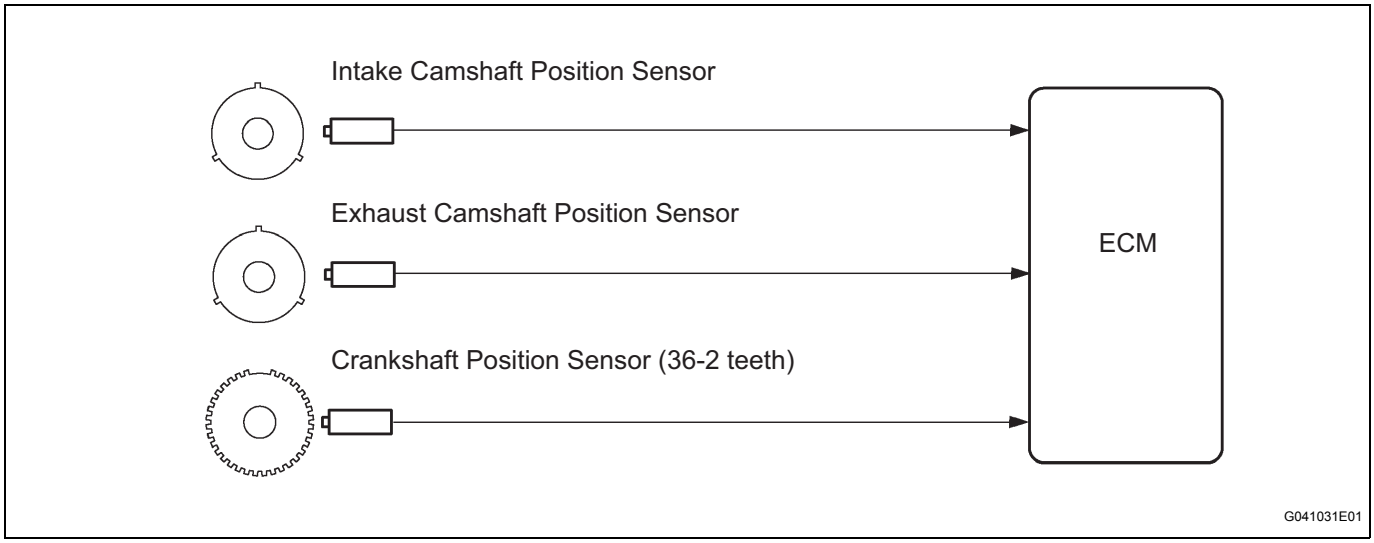

The ECM illuminates the MIL and sets a DTC when either one of the following conditions, which could cause emission deterioration, is detected (2 trip detection logic).
– Within the first 1,000 crankshaft revolutions of the engine starting, an excessive misfiring rate (approximately 20 to 50 misfires per 1,000 crankshaft revolutions) occurs once.
– After the first 1,000 crankshaft revolutions, an excessive misfiring rate (approximately 20 to 60 misfires per 1,000 crankshaft revolutions) occurs 4 times in sequential crankshaft revolutions.

The ECM flashes the MIL and sets a DTC when either one of the following conditions, which could cause the Three-Way Catalytic Converter (TWC) damage, is detected (2 trip detection logic).
– In every 200 crankshaft revolutions at a high engine rpm, the threshold misfiring percentage is recorded once.
– In every 200 crankshaft revolutions at a normal engine rpm, the threshold misfiring percentage is recorded 3 times.

MONITOR STRATEGY

Related DTCs	P0300: Multiple cylinder misfire P0301: Cylinder 1 misfire P0302: Cylinder 2 misfire P0303: Cylinder 3 misfire P0304: Cylinder 4 misfire P0305: Cylinder 5 misfire P0306: Cylinder 6 misfire
Required Sensors / Components (Main)	Injector, Ignition coil, Spark plug
Required Sensors / Components (Related)	Crankshaft, Camshaft, Engine coolant temperature and intake air temperature sensors and Mass air flow meter
Frequency of Operation	Continuous
Duration	1,000 to 4,000 crankshaft revolutions: Emission related misfire 200 to 600 crankshaft revolutions: Catalyst damaged misfire
MIL Operation	2 driving cycles: Emission related misfire MIL flashes immediately: Catalyst damaged misfire
Sequence of Operation	None

TYPICAL ENABLING CONDITIONS

Misfire:

The monitor will run whenever these DTCs are not present	P0100, P0101, P0102, P0103 (MAF Sensor), P0110, P0112, P0113 (IAT Sensor), P0115, P0116, P0117, P0118 (ECT Sensor), P0120, P0121, P0122, P0123, P0220, P0222, P0223 , P2135 (TP Sensor), P0125 (Insufficient ECT for Closed Loop), P0327, P0328, P0332, P0333 (Knock Sensor), P0335 (CKP Sensor), P0340, P0342, P0343, P0345 (VVT Sensor 1,2), P0500 (VSS),

Battery voltage	8 V or more
VVT system	No operate by scan tool
Engine RPM	400 to 6,500 rpm
All of following conditions met	Condition 1 and 2
1. Engine Coolant Temperature (ECT)	-10°C (14°F) or more
2. Either of following conditions met	Condition (a) or (b)
(a) Engine start ECT	More than -7°C (19°F)
(b) ECT	More than 20°C (68°F)
Fuel-cut	OFF

Monitor period of emission-related-misfire:

First 1,000 revolutions after engine start, or check mode	Crankshaft 1,000 revolutions
Except above	Crankshaft 1,000 revolutions x 4

Monitor period of catalyst-damage-misfire (MIL blinks):

All of following conditions 1, 2 and 3 are met	Crankshaft 200 revolutions
1. Driving cycle	1st
2. Check mode	OFF
3. Engine RPM	Less than 2,600 rpm
Except above	Crankshaft 200 revolutions x 3

TYPICAL MALFUNCTION THRESHOLDS

Monitor period of emission-related-misfire:

Misfire rate	1% or more

Monitor period of catalyst-damage-misfire (MIL blinks):

Number of misfire per 200 revolutions	94 or more (varies with intake air amount and RPM)
Paired cylinders misfire	Detected

MONITOR RESULT

Refer to Checking Monitor Status for detailed information (See page ES-25).

Misfire monitor - All cylinders

MID	TID	Scaling	Description of Test Value	Minimum Test Limit	Maximum Test Limit
$A1	$0B	Multiply by 1 [time]	Exponential Weighted Moving Average misfire counts for last 10 driving cycles - total	0	65535
$A1	$0C	Multiply by 1 [time]	Misfire counts for last and current driving cycles - total	0	65535

Misfire monitor - Cylinder 1

MID	TID	Scaling	Description of Test Value	Minimum Test Limit	Maximum Test Limit
$A2	$0B	Multiply by 1 [time]	Exponential Weighted Moving Average misfire counts for last 10 driving cycles - total	0	65535
$A2	$0C	Multiply by 1 [time]	Misfire counts for last and current driving cycles - total	0	65535

Misfire monitor - Cylinder 2

MID	TID	Scaling	Description of Test Value	Minimum Test Limit	Maximum Test Limit
$A3	$0B	Multiply by 1 [time]	Exponential Weighted Moving Average misfire counts for last 10 driving cycles - total	0	65535
$A3	$0C	Multiply by 1 [time]	Misfire counts for last and current driving cycles - total	0	65535

Misfire monitor - Cylinder 3

MID	TID	Scaling	Description of Test Value	Minimum Test Limit	Maximum Test Limit
$A4	$0B	Multiply by 1 [time]	Exponential Weighted Moving Average misfire counts for last 10 driving cycles - total	0	65535
$A4	$0C	Multiply by 1 [time]	Misfire counts for last and current driving cycles - total	0	65535

Misfire monitor - Cylinder 4

MID	TID	Scaling	Description of Test Value	Minimum Test Limit	Maximum Test Limit
$A5	$0B	Multiply by 1 [time]	Exponential Weighted Moving Average misfire counts for last 10 driving cycles - total	0	65535
$A5	$0C	Multiply by 1 [time]	Misfire counts for last and current driving cycles - total	0	65535

Misfire monitor - Cylinder 5

MID	TID	Scaling	Description of Test Value	Minimum Test Limit	Maximum Test Limit
$A6	$0B	Multiply by 1 [time]	Exponential Weighted Moving Average misfire counts for last 10 driving cycles - total	0	65535
$A6	$0C	Multiply by 1 [time]	Misfire counts for last and current driving cycles - total	0	65535

Misfire monitor - Cylinder 6

MID	TID	Scaling	Description of Test Value	Minimum Test Limit	Maximum Test Limit
$A7	$0B	Multiply by 1 [time]	Exponential Weighted Moving Average misfire counts for last 10 driving cycles - total	0	65535
$A7	$0C	Multiply by 1 [time]	Misfire counts for last and current driving cycles - total	0	65535

WIRING DIAGRAM

Refer to DTC P0351 for the wiring diagram of the ignition system (See page ES-219).

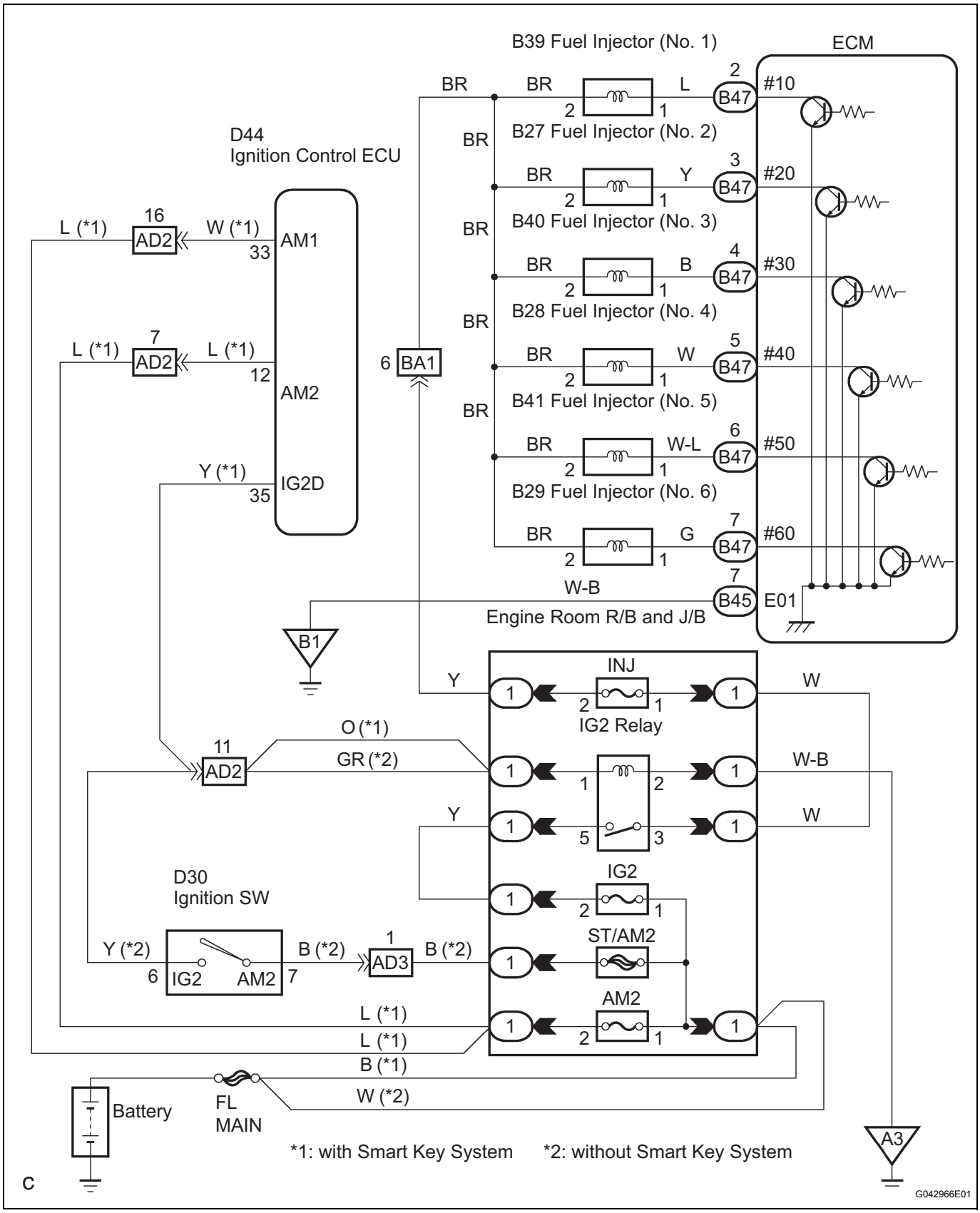

CONFIRMATION DRIVING PATTERN

1. Connect the intelligent tester to the DLC3.
2. Turn the ignition switch on (IG).
3. Turn the tester on.

4. Record the DTC(s) and freeze frame data.
5. Using the tester, select the check mode (See page ES-48).
6. Read the misfire counts of each cylinder (CYL #1 to #6) with the engine in an idling condition. If any misfire count is displayed, skip the following confirmation driving pattern.
7. Drive the vehicle several times with the MISFIRE RPM and MISFIRE LOAD in the DATA LIST.
   HINT:
   In order to store misfire DTCs, it is necessary to drive the vehicle for the period of time shown in the table below, with the MISFIRE RPM and MISFIRE LOAD in the DATA LIST.

Engine RPM	Duration
Idling	3.5 minutes or more
1,000	3 minutes or more
2,000	1.5 minutes or more
3,000	1 minute or more

8. Check whether misfires have occurred by checking DTCs and freeze frame data.
   HINT:
   Do not turn the ignition switch off until the stored DTC(s) and freeze frame data have been recorded. When the ECM returns to normal mode (default), the stored DTC(s), freeze frame data and other data will be erased.
9. Record the DTC(s), freeze frame data and misfire counts.
10. Turn the ignition switch off and wait for at least 5 seconds.

INSPECTION PROCEDURE

HINT:

- If any DTCs other than the misfire DTCs are output, troubleshoot those DTCs first.
- Read freeze frame data using the intelligent tester. The ECM records vehicle and driving condition information as freeze frame data the moment a DTC is stored. When troubleshooting, freeze frame data can be helpful in determining whether the vehicle was running or stopped, whether the engine was warmed up or not, whether the air/fuel ratio was lean or rich, as well as other data recorded at the time of a malfunction.
- If the misfire does not recur when the vehicle is brought to the workshop, reproduce the conditions stored in the freeze frame data.
- If the misfire still cannot be reproduced even though the conditions stored in the freeze frame data have been duplicated, one of the following factors is considered to be a possible cause of the problem:
  1. The fuel tank is low.
  2. Improper fuel is used.
  3. The spark plugs have been contaminated.
  4. The problem is complex.
- After finishing repairs, check the misfire counts of the cylinders (CYL #1, #2, #3, #4, #5 and #6).
- Be sure to confirm that no misfiring cylinder DTCs are set again by conducting the confirmation driving pattern, after repairs.
- For 6 and 8 cylinder engines, the ECM intentionally does not set the specific misfiring cylinder DTCs at high engine RPM. If misfires occur only in high engine RPM areas, only DTC P0300 is set.
  If DTC P0300 is present, perform the following operations:
  1. Clear the DTC (See page ES-44).
  2. Start the engine and conduct the confirmation driving pattern.
  3. Read the misfiring rates of each cylinder or DTC(s) using the tester.
  4. Repair the cylinder(s) that has a high misfiring rate or is indicated by the DTC.
  5. After finishing repairs, conduct the confirmation driving pattern again, in order to verify that DTC P0300 is not set.
- When one of SHORT FT #1, LONG FT #1, SHORT FT #2 or LONG FT #2 in the freeze frame data is outside the range of +-20%, the air-fuel ratio may be rich (?20% or less) or lean (+20% or more).
- When the COOLANT TEMP in the freeze frame data is less than 75°C (167°F), the misfires have occurred only while warming up the engine.

1	CHECK ANY OTHER DTCS OUTPUT (IN ADDITION TO MISFIRE TO DTCS)

(a) Connect the intelligent tester to the DLC3.
(b) Turn the ignition switch on (IG).
(c) Turn the tester on.
(d) Select the following menu items: DIAGNOSIS / ENHANCED OBD II / DTC INFO / CURRENT CODES.
(e) Read DTCs.

Result

Display (DTC Output)	Proceed to
P0300, P0301, P0302, P0303, P0304, P0305 and/or P0306	A
P0300, P0301, P0302, P0303, P0304, P0305 and/or P0306 and other DTCs	B

ES

HINT:
If any DTCs other than P0300, P0301, P0302, P0303, P0304, P0305 and P0306 are output, troubleshoot those DTCs first.

B → **GO TO DTC CHART**

A

2	READ VALUE OF INTELLIGENT TESTER (MISFIRE RPM AND MISFIRE LOAD)

(a) Connect the intelligent tester to the DLC3.
(b) Turn the ignition switch on (IG) and turn the tester on.
(c) Select the following menu items: DIAGNOSIS / ENHANCED OBD II / DATA LIST / MISFIRE / MISFIRE RPM and MISFIRE LOAD.
(d) Read and note the MISFIRE RPM and MISFIRE LOAD (engine load) values.
HINT:
The MISFIRE RPM and MISFIRE LOAD indicate the vehicle conditions under which the misfire occurred.

NEXT

3	CHECK PCV HOSE CONNECTIONS

OK:
PCV hose is connected correctly and is not damaged.

NG → **REPAIR OR REPLACE PCV HOSE**

OK

4	CHECK MISFIRE COUNT (CYL #1, #2, #3, #4, #5 AND #6)

(a) Connect the intelligent tester to the DLC3 (Procedure "A").
(b) Turn the ignition switch on (IG) (Procedure "B").
(c) Turn the tester on (Procedure "C").

(d) Clear DTCs (See page ES-44) (Procedure "D").
(e) Select the following menu items: DIAGNOSIS / ENHANCED OBD II / DATA LIST / MISFIRE / CYL #1, #2, #3, #4, #5 and #6 (Procedure "E").
(f) Allow the engine to idle (Procedure "F").
(g) Read each value of CYL #1 to #6 displayed on the tester (Procedure "G").
  (1) Shift the gear selector lever to the D position.
  (2) Repeat procedures "E" to "G" above.
  (3) Check the CYL #1 to #6.
  (4) If misfire counts are still not displayed, perform procedures "I" and "J" and then check the misfire counts again.
(h) If no misfire counts occur in any cylinders, perform the following operations (Procedure "H").
(i) Drive the vehicle with the MISFIRE RPM and MISFIRE LOAD noted in step 2 (Procedure "I").
(j) Read the CYL #1 to #6 or DTCs displayed on the tester (Procedure "J").

ES

Result

Misfire Count	Proceed to
One or two cylinders have misfire counts	A
Three cylinders or more have misfire counts	B

B → **Go to step 12**

A

5 CHECK SPARK PLUG

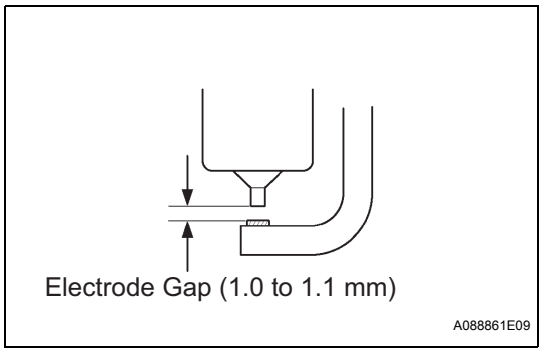

(a) Remove the ignition coil and the spark plug of the misfiring cylinder.
(b) Measure the spark plug electrode gap.
Standard:
Between 1.0 mm and 1.1 mm (0.039 in. and 0.043 in.)
(c) Check the electrode for carbon deposits.
Require spark plug:

Manufacturers	Products
DENSO	FK20HR11

NOTICE:
If the electrode gap is larger than the standard, replace the spark plug. Do not adjust the electrode gap.

NG → **REPLACE SPARK PLUG**

OK

6	CHECK FOR SPARKS AND IGNITION (SPARK TEST)

(a) Disconnect the injector connectors to prevent the engine from starting.
(b) Install the spark plug to the ignition coil.
(c) Attach the spark plug assembly to the cylinder head cover (ground the spark plug).
(d) Crank the engine for less than 2 seconds and check the spark.
NOTICE:
Do not crank the engine for more than 2 seconds.
OK:
Sparks jump across electrode gap
(e) Reconnect the injector connectors.

NG → **Go to step 8**

OK

7	CHECK CYLINDER COMPRESSION PRESSURE OF MISFIRING CYLINDER

(a) Measure the cylinder compression pressure of the misfiring cylinder (See page EM-2).

OK → **Go to step 9**

NG

CHECK ENGINE TO DETERMINE CAUSE OF LOW COMPRESSION

8	CHANGE NORMAL SPARK PLUG AND CHECK SPARK OF MISFIRING CYLINDER

(a) Switch the spark plug to a spark plug that functions normally.
(b) Perform the spark test again (refer to step 6).
OK:
Sparks jump across electrode gap.

NG → **REPLACE SPARK PLUG**

OK

REPLACE IGNITION COIL ASSEMBLY

9	INSPECT ECM TERMINAL OF MISFIRING CYLINDER (#10, #20, #30, #40, #50 AND/OR #60 VOLTAGE)

ECM:

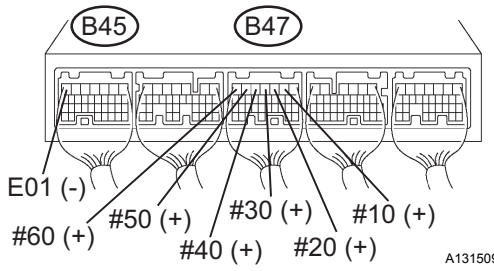

(a) Turn the ignition switch on (IG).
(b) Measure the voltage between the terminals of the B45 and B47 ECM connector.

Standard voltage

Tester Connections	Specified Conditions
#10 (B47-2) - E01 (B45-7)	9 to 14 V
#20 (B47-3) - E01 (B45-7)	9 to 14 V
#30 (B47-4) - E01 (B45-7)	9 to 14 V
#40 (B47-5) - E01 (B45-7)	9 to 14 V
#50 (B47-6) - E01 (B45-7)	9 to 14 V
#60 (B47-7) - E01 (B45-7)	9 to 14 V

ES

OK → Go to step 11

NG

10	CHECK HARNESS AND CONNECTOR (INJECTOR - ECM)

Wire Harness Side:

Injector Connector

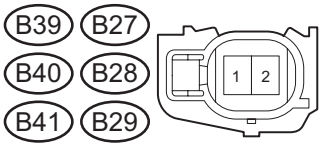

Front View

ECM:

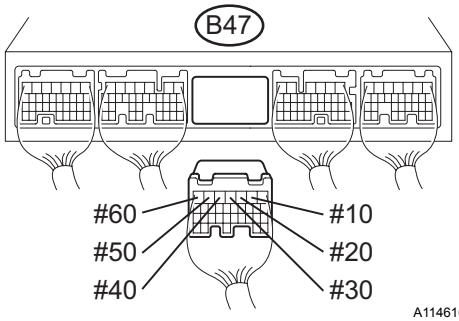

(a) Disconnect the injector connector (of the misfiring cylinder).
(b) Disconnect the B47 ECM connector.
(c) Turn the ignition switch on (IG).
(d) Measure the resistance and voltage between the injector and the ECM connector terminals.

Standard (Cylinder No. 1)

Tester Connections	Specified Conditions
B39-1 - Ground	11 to 14 V
B39-2 - Ground	10 kΩ or higher
B39-2 - #10 (B47-2)	Below 1 Ω

Standard (Cylinder No. 2)

Tester Connections	Specified Conditions
B27-1 - Ground	11 to 14 V
B27-2 - Ground	10 kΩ or higher
B27-2 - #20 (B47-3)	Below 1 Ω

Standard (Cylinder No. 3)

Tester Connections	Specified Conditions
B40-1 - Ground	11 to 14 V
B40-2 - Ground	10 kΩ or higher
B40-2 - #30 (B47-4)	Below 1 Ω

Standard (Cylinder No. 4)

Tester Connections	Specified Conditions
B28-1 - Ground	11 to 14 V
B28-2 - Ground	10 kΩ or higher
B28-2 - #40 (B47-5)	Below 1 Ω

Standard (Cylinder No. 5)

Tester Connections	Specified Conditions
B41-1 - Ground	11 to 14 V
B41-2 - Ground	10 kΩ or higher
B41-2 - #50 (B47-6)	Below 1 Ω

Standard (Cylinder No. 6)

Tester Connections	Specified Conditions
B29-1 - Ground	11 to 14 V
B29-2 - Ground	10 kΩ or higher
B29-2 - #60 (B47-7)	Below 1 Ω

ES

(e) Reconnect the injector connector.
(f) Reconnect the ECM connector.

NG → **REPAIR OR REPLACE HARNESS OR CONNECTOR**

OK

11 CHECK FUEL INJECTOR OF MISFIRING CYLINDER

(a) Check the injector injection (whether fuel volume is high or low, and whether injection pattern is poor) (See page FU-15).

NG → **REPLACE FUEL INJECTOR ASSEMBLY**

OK

12 CHECK AIR INDUCTION SYSTEM

(a) Check the air induction system for vacuum leakage.
OK:
No leakage from air induction system.

NG → **REPAIR OR REPLACE AIR INDUCTION SYSTEM**

OK

13	CHECK VALVE TIMING (CHECK FOR LOOSE AND JUMPED TEETH ON TIMING CHAIN)

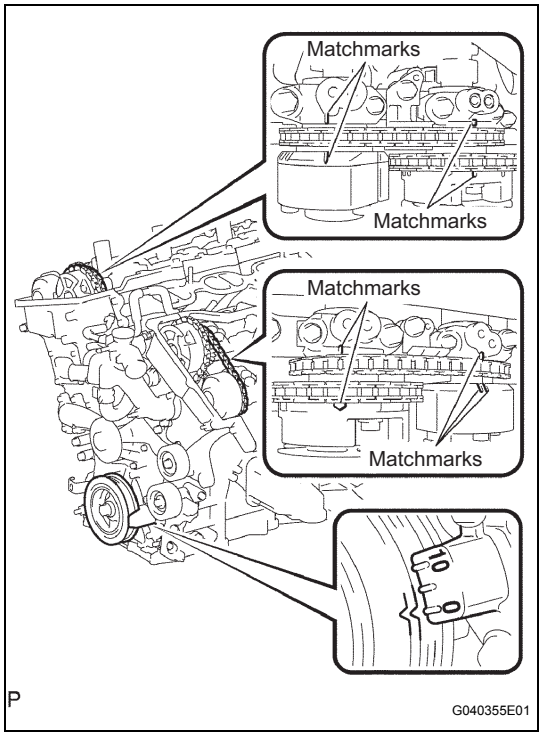

(a) Remove the cylinder head covers RH and LH.
(b) Turn the crankshaft to align the matchmarks of the crankshaft.
(c) Align the notch of the crankshaft pulley to the "0" position.
(d) Check if the matchmarks of the camshaft pulley and camshaft bearing cap align.
(e) Turn the crankshaft clockwise by 360° if the matchmarks do not align. Check if they align once again.

OK:

The matchmarks of the camshaft pulley and the camshaft bearing cap align when the notch of the crankshaft pulley is in the "0" position.

NG → **ADJUST VALVE TIMING**

OK

14	CHECK FUEL PRESSURE

(a) Check the fuel pressure (See page FU-7).

NG → **CHECK AND REPLACE FUEL PUMP, PRESSURE REGULATOR, FUEL PIPE LINE AND FILTER**

OK

15	READ VALUE OF INTELLIGENT TESTER (COOLANT TEMP)

(a) Connect the intelligent tester to the DLC3.
(b) Turn the ignition switch on (IG).
(c) Turn the tester on.
(d) Select the following menu items: DIAGNOSIS / ENHANCED OBD II / DATA LIST / PRIMARY / COOLANT TEMP.
(e) Read the COOLANT TEMP twice, when the engine is both cold and warmed up.

Standard:

With cold engine:
Same as ambient air temperature.
With warm engine:
Between 75°C and 95°C (167°F and 203°F).

ES

NG → REPLACE ENGINE COOLANT TEMPERATURE SENSOR

OK

16	READ VALUE OF INTELLIGENT TESTER (MAF)

(a) Connect the intelligent tester to the DLC3.
(b) Turn the ignition switch on (IG).
(c) Turn the tester on.
(d) Select the following menu items: DIAGNOSIS / ENHANCED OBD II / DATA LIST / PRIMARY / MAF and COOLANT TEMP.
(e) Allow the engine to idle until the COOLANT TEMP reaches 75°C (167°F) or more.
(f) Read the MAF with the engine in an idling condition and at an engine speed of 2,500 rpm.
Standard:
MAF while engine idling:
Between 3.2 g/s and 4.7 g/s (shift position: N, A/C: OFF).
MAF at engine speed of 2,500 rpm:
Between 13.1 g/s and 18.9 g/s (shift position: N, A/C: OFF).

NG → REPLACE MASS AIR FLOW METER

OK

CHECK FOR INTERMITTENT PROBLEMS

DTC	P0327	Knock Sensor 1 Circuit Low Input (Bank 1 or Single Sensor)

DTC	P0328	Knock Sensor 1 Circuit High Input (Bank 1 or Single Sensor)

DTC	P0332	Knock Sensor 2 Circuit Low Input (Bank 2)

DTC	P0333	Knock Sensor 2 Circuit High Input (Bank 2)

DESCRIPTION

A flat type knock sensor (non-resonant type) has a structure that can detect vibrations over a wide band of frequencies: between approximately 6 kHz and 15 kHz.
Knock sensors are fitted onto the engine block to detect engine knocking.
The knock sensor contains a piezoelectric element which generates a voltage when the engine block vibrates due to knocking. Any occurrence of engine knocking can be suppressed by delaying the ignition timing.

DTC No.	DTC Detection Conditions	Trouble Areas
P0327 P0332	Output voltage of knock sensor 1 or 2 is less than 0.5 V (1 trip detection logic)	• Short in knock sensor 1 or 2 circuit • Knock sensor 1 or 2 • ECM
P0328 P0333	Output voltage of knock sensor 1 or 2 is more than 4.5 V (1 trip detection logic)	• Open in knock sensor 1 or 2 circuit • Knock sensor 1 or 2 • ECM

HINT:
When any of DTCs P0327, P0328, P0332 and P0333 are set, the ECM enters fail-safe mode. During fail-safe mode, the ignition timing is delayed to its maximum retardation. Fail-safe mode continues until the ignition switch is turned off.
Reference: Inspection using an oscilloscope

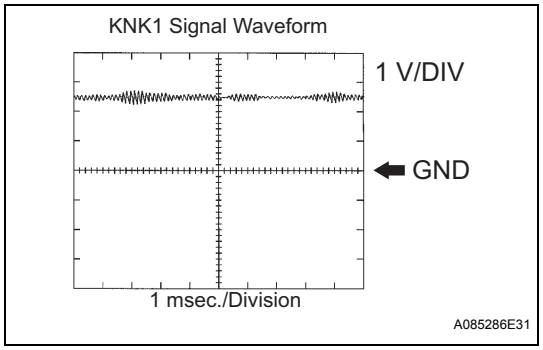

The correct waveform is as shown.

Items	Contents
Terminals	KNK1 - EKNK or KNK2 - EKN2
Equipment Settings	0.01 to 10 V/Division, 0.01 to 10 msec./Division
Conditions	Keep engine speed at 4,000 rpm with warm engine

MONITOR DESCRIPTION

The knock sensor, located on the cylinder block, detects spark knock. When a spark knock occurs, the piezoelectric element of the sensor vibrates. When the ECM detects a voltage in this frequency range, it retards the ignition timing to suppress the spark knock.
The ECM also senses background engine noise with the knock sensor and uses this noise to check for faults in the sensor. If the knock sensor signal level is too low for more than 10 seconds, or if the knock sensor output voltage is outside the normal range, the ECM interprets this as a fault in the knock sensor and sets a DTC.

MONITOR STRATEGY

Related DTCs	P0327: Knock sensor (Bank 1) open/short (Low voltage) P0328: Knock sensor (Bank 1) open/short (High voltage) P0332: Knock sensor (Bank 2) open/short (Low voltage) P0333: Knock sensor (Bank 2) open/short (High voltage)
Required Sensors / Components (Main)	Knock sensor (Bank 1 and 2)
Required Sensors / Components (Related)	-
Frequency of Operation	Continuous
Duration	1 second
MIL Operation	Immediate
Sequence of Operation	None

TYPICAL ENABLING CONDITIONS

The monitor will run whenever these DTCs are not present	None
Battery voltage	10.5 V or more
Time after engine start	5 seconds or more
Ignition switch	ON
Starter	OFF

TYPICAL MALFUNCTION THRESHOLDS

Knock Sensor Range Check (Low voltage) P0327 and P0332:

Knock sensor voltage	Less than 0.5 V

Knock Sensor Range Check (High voltage) P0328 and P0333:

Knock sensor voltage	More than 4.5 V

WIRING DIAGRAM

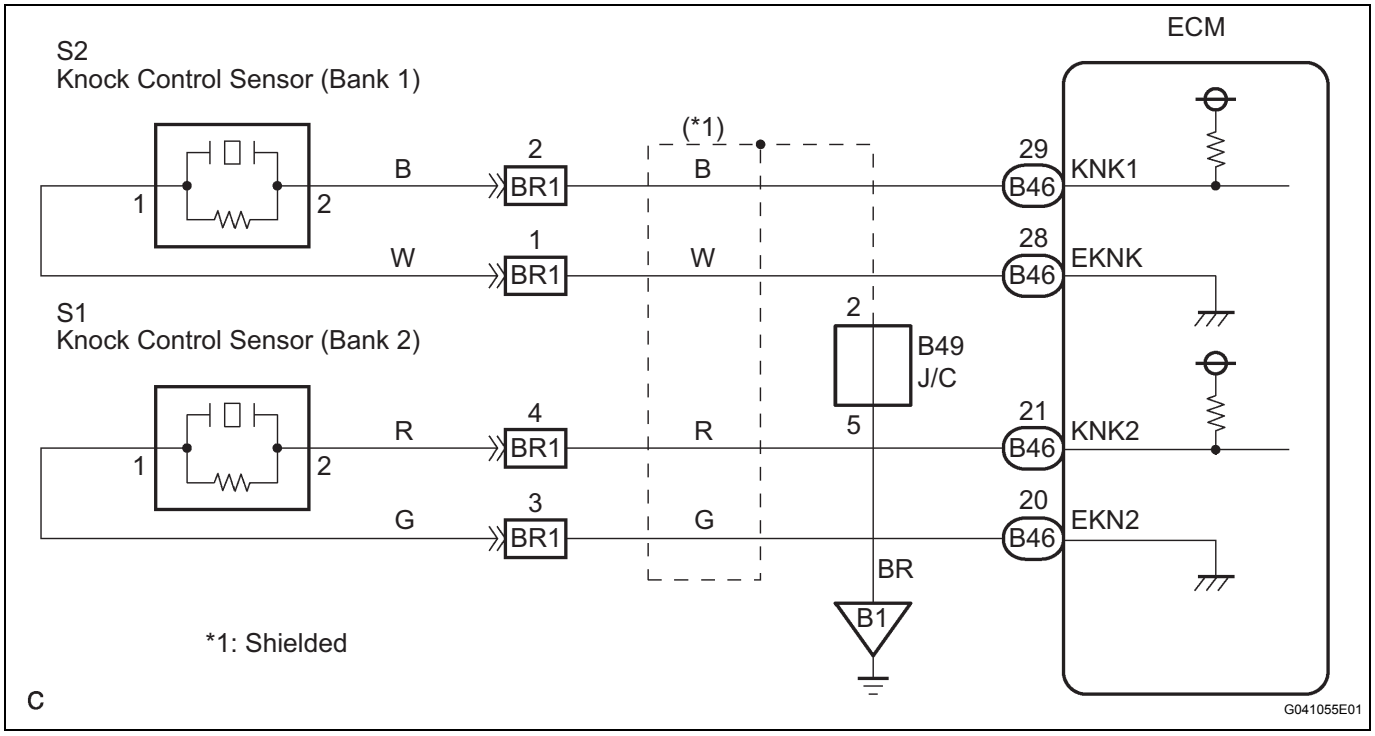

INSPECTION PROCEDURE

HINT:

- DTCs P0327 and P0328 are for the bank 1 knock sensor circuit.
- DTCs P0332 and P0333 are for the bank 2 knock sensor circuit.
- Read freeze frame data using the intelligent tester. The ECM records vehicle and driving condition information as freeze frame data the moment a DTC is stored. When troubleshooting, freeze frame data can be helpful in determining whether the vehicle was running or stopped, whether the engine was warmed up or not, whether the air/fuel ratio was lean or rich, as well as other data recorded at the time of a malfunction.

ES

1	READ VALUE OF DTC OUTPUT (CHECK KNOCK SENSOR CIRCUIT)

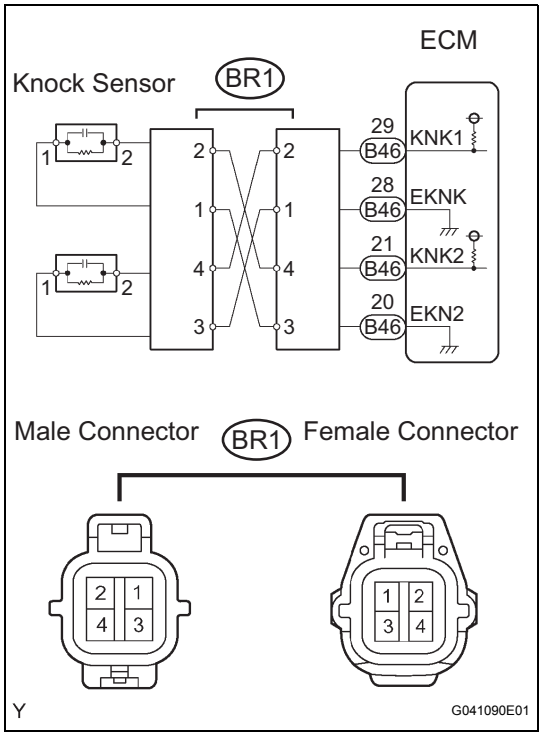

(a) Disconnect the BR1 connector.
(b) Using lead wires, connect the connectors as follows.

Male Connector - Female Connector
Terminal 2 - Terminal 4
Terminal 1 - Terminal 3
Terminal 4 - Terminal 2
Terminal 3 - Terminal 1

(c) Warm up the engine.
(d) Run the engine at 3,000 rpm for 10 seconds or more.
(e) Connect the intelligent tester to the DLC3.
(f) Turn the ignition switch on (IG) and turn the intelligent tester on.
(g) Select the item: DIAGNOSIS / ENHANCED OBD II / DTC INFO / CURRENT CODES.
(h) Read DTCs.

Result

Display	Proceed to
DTCs are same as when vehicle brought in P0327, P0328 → P0327, P0328 or P0332, P0333 → P0332, P0333	**A**
DTCs are different from when vehicle brought in P0327, P0328 → P0332, P0333 or P0332, P0333 → P0327, P0328	**B**

(i) Reconnect the BR1 connector.

B → **Go to step 4**

A

2 CHECK HARNESS OR CONNECTOR (CONNECTOR - ECM)

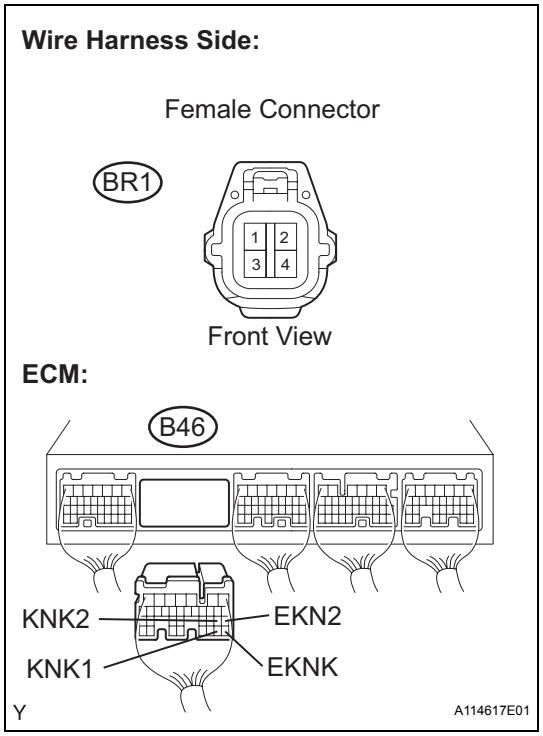

(a) Disconnect the BR1 connector.
(b) Disconnect the B46 ECM connector.
(c) Measure the resistance.

Standard resistance (Check for open)

Tester Connections	Specified Conditions
BR1 female connector 2 - KNK1 (B46-29)	Below 1 Ω
BR1 female connector 1 - EKNK (B46-28)	Below 1 Ω
BR1 female connector 4 - KNK2 (B46-21)	Below 1 Ω
BR1 female connector 3 - EKN2 (B46-20)	Below 1 Ω

Standard resistance (Check for short)

Tester Connections	Specified Conditions
BR1 female connector 2 or KNK1 (B46-29) - Body ground	10 kΩ or higher
BR1 female connector 1 or EKNK (B46-28) - Body ground	10 kΩ or higher
BR1 female connector 4 or KNK2 (B46-21) - Body ground	10 kΩ or higher
BR1 female connector 3 or EKN2 (B46-20) - Body ground	10 kΩ or higher

(d) Reconnect the connector.
(e) Reconnect the ECM connector.

NG → **REPAIR OR REPLACE HARNESS OR CONNECTOR**

OK

3 INSPECT ECM

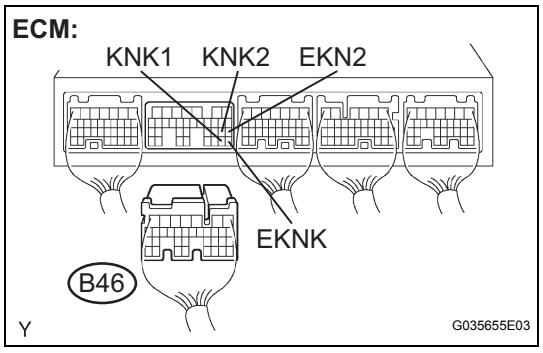

(a) Disconnect the B46 ECM connector.
(b) Turn the ignition switch on (IG).
(c) Measure the voltage between the ECM terminals.

Standard voltage

Tester Connections	Specified Conditions
KNK1 (B46-29) - EKNK (B46-28)	4.5 to 5.5 V
KNK2 (B46-21) - EKN2 (B46-20)	4.5 to 5.5 V

(d) Reconnect the ECM connector.

NOTICE:
Fault may be intermittent. Check the wire harness and connectors carefully and retest.

NG → **REPLACE ECM**

OK

OTHERS FOR INTERMITTENT PROBLEMS

4	INSPECT KNOCK SENSOR

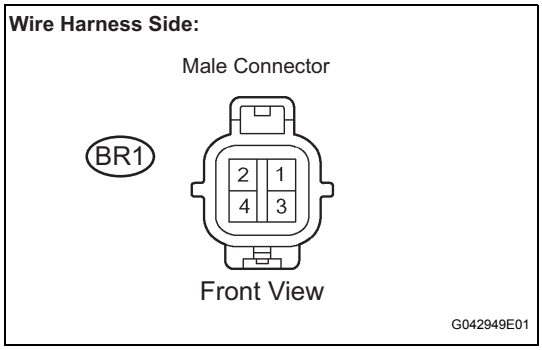

(a) Disconnect the BR1 connector.
(b) Measure the resistance between the terminals of the BR1 male connector.
Standard resistance

Tester Connections	Specified Conditions
BR1 male connector 1 - 2	120 to 280 kΩ
BR1 male connector 3 - 4	120 to 280 kΩ

(c) Reconnect the connector.

OK → OTHERS FOR INTERMITTENT PROBLEMS

NG

5	CHECK HARNESS AND CONNECTOR (CONNECTOR - KNOCK SENSOR)

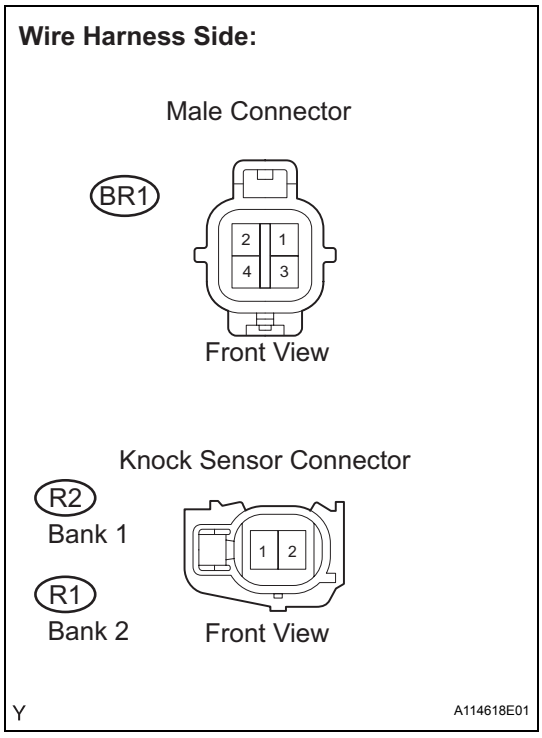

HINT:
- If DTC P0327 or P0328 has changed to P0332 or P0333, check the knock sensor circuit on the right bank side.
- If DTC P0332 or P0333 has changed to P0327 or P0328, check the knock sensor circuit on the left bank side.

(a) Disconnect the BR1 connector.
(b) Disconnect the R1 and R2 knock sensor connectors.
(c) Measure the resistance.
Standard resistance (Check for open)

Tester Connections	Specified Conditions
BR1 male connector 2 - R2-2	Below 1 Ω
BR1 male connector 1 - R2-1	Below 1 Ω
BR1 male connector 4 - R1-2	Below 1 Ω
BR1 male connector 3 - R1-1	Below 1 Ω

Standard resistance (Check for short)

Tester Connections	Specified Conditions
BR1 male connector 2 or R2-2 - Body ground	10 kΩ or higher
BR1 male connector 1 or R2-1 - Body ground	10 kΩ or higher
BR1 male connector 4 or R1-2 - Body ground	10 kΩ or higher
BR1 male connector 3 or R1-1 - Body ground	10 kΩ or higher

(d) Reconnect the connector.
(e) Reconnect the knock sensor connector.

NG → REPAIR OR REPLACE HARNESS OR CONNECTOR

OK

REPLACE KNOCK SENSOR

DTC	P0335	Crankshaft Position Sensor "A" Circuit

DTC	P0339	Crankshaft Position Sensor "A" Circuit Intermittent

DESCRIPTION

The Crankshaft Position (CKP) sensor system consists of a CKP sensor plate and a pickup coil. The sensor plate has 34 teeth and is installed on the crankshaft. The pickup coil is made of an iron core and a magnet.

The sensor plate rotates as each tooth passes through the pickup coil, and a pulse signal is created. The pickup coil generates 34 signals per engine revolution. Based on these signals, the ECM calculates the crankshaft position and engine RPM. Using these calculations, the fuel injection time and ignition timing are controlled.

ES

DTC No.	DTC Detection Conditions	Trouble Areas
P0335	• No CKP sensor signal to ECM while cranking (1 trip detection logic) • No CKP sensor signal to ECM at engine speed of 600 rpm or more (1 trip detection logic)	• Open or short in CKP sensor circuit • CKP sensor • Sensor plate (CKP sensor plate) • ECM
P0339	Under conditions (a), (b) and (c), no CKP sensor signal to ECM for 0.05 seconds or more (1 trip detection logic): (a) Engine speed 1,000 rpm or more (b) Starter signal OFF (c) 3 seconds or more have lapsed since starter signal switched from ON to OFF	• Open or short in CKP sensor circuit • CKP sensor • Sensor plate (CKP sensor plate) • ECM

Reference: Inspection using an oscilloscope

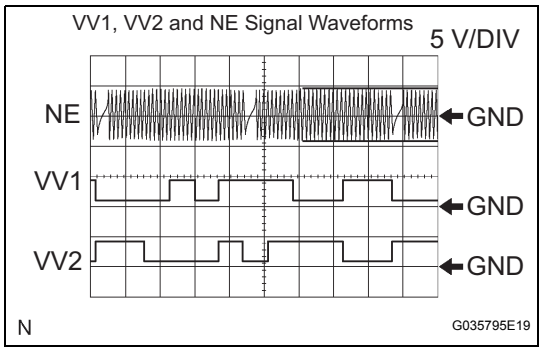

HINT:

- The correct waveform is shown on the illustration.
- VV1+ and VV2+ stand for the VVT sensor signal, and NE+ stands for the CKP sensor signal.

Items	Contents
Terminals	VV1+ - VV1- VV2+ - VV2- NE+ - NE-
Equipment Settings	5 V/Division, 20 ms/Division
Conditions	Cranking or idling

MONITOR DESCRIPTION

If there is no signal from the CKP sensor despite the engine revolving, the ECM interprets this as a malfunction of the sensor.

If the malfunction is not repaired successfully, a DTC is set 10 seconds after the engine is next started.

MONITOR STRATEGY

Related DTCs	P0335: Crankshaft position sensor range check during cranking P0335: Crankshaft position sensor range check during engine running
Required Sensors / Components (Main)	Crankshaft Position (CKP) sensor
Required Sensors / Components (Related)	-
Frequency of Operation	Continuous
Duration	Conditions met for 3 times: CKP sensor range check during cranking 0.016 seconds: CKP sensor range check during engine running
MIL Operation	Immediate
Sequence of Operation	None

TYPICAL ENABLING CONDITIONS

All:

The monitor will run whenever these DTCs are not present	None

Crankshaft Position Sensor Range Check during Cranking P0335:

Starter	ON
Ignition switch	ON
Battery voltage	7 V or more
Minimum battery voltage while starter ON	Less than 11 V
Number of VVT sensor signal pulse	6
CMP sensor circuit fail	Not detected

Crankshaft Position Sensor Range Check during Engine Running P0335:

Engine speed	600 rpm or more
Starter	OFF
Time after starter from ON to OFF	3 seconds or more

TYPICAL MALFUNCTION THRESHOLDS

Crankshaft Position Sensor Range Check during Cranking P0335:

Number of crankshaft position sensor signal pulse	132 or less, or 174 or more

Crankshaft Position Sensor Range Check during Engine Running P0335:

CKP sensor signal	No signal for 0.016 seconds

COMPONENT OPERATING RANGE

CKP sensor	• CKP sensor output voltage fluctuates while crankshaft revolving • 34 CKP sensor signals per crankshaft revolution

WIRING DIAGRAM

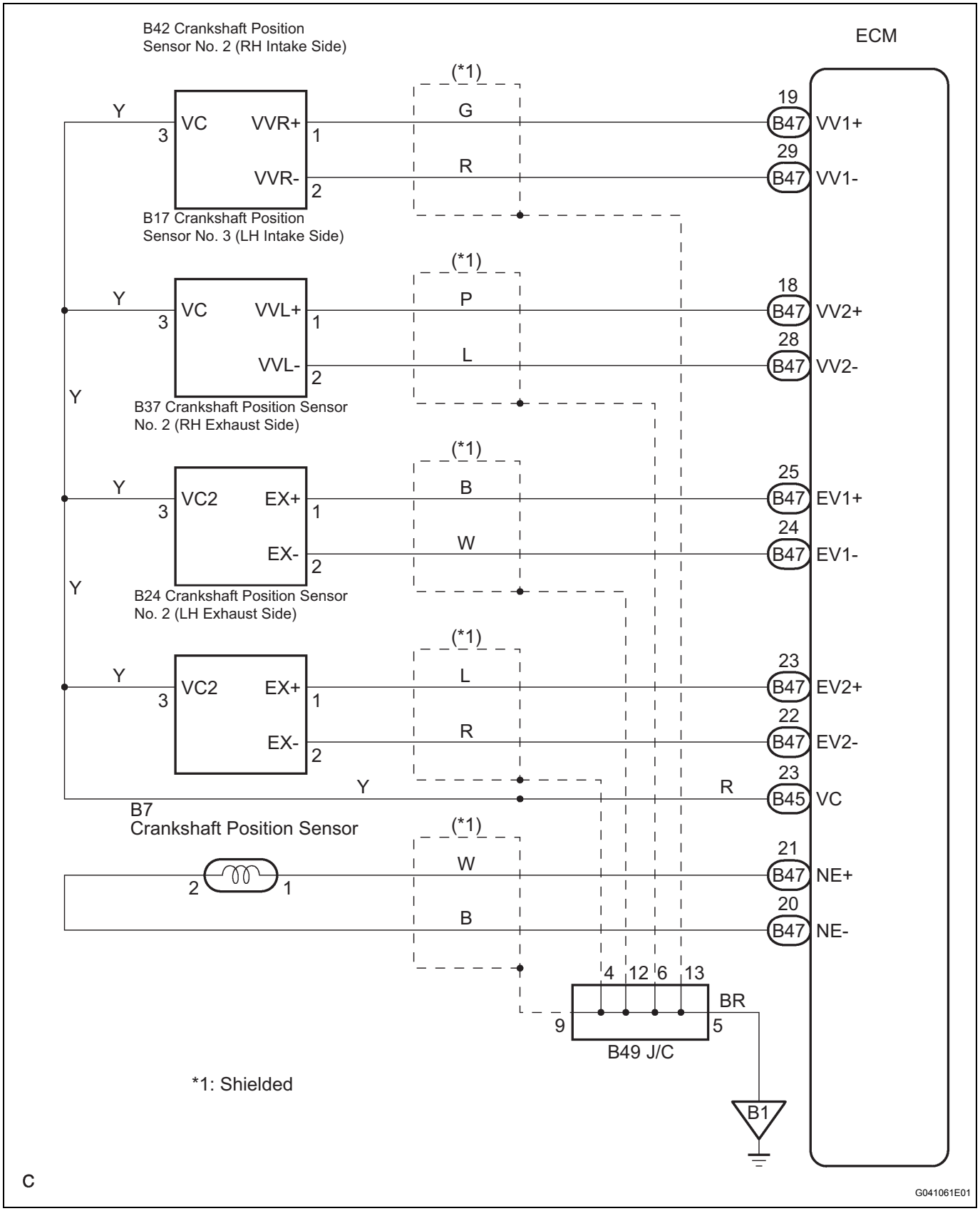

INSPECTION PROCEDURE

HINT:

- If no problem is found by this diagnostic troubleshooting procedure, troubleshoot the engine mechanical systems.
- Check the engine speed. The engine speed can be checked by using the intelligent tester. The procedure for checking, follow the operation below:
  (a) Connect the intelligent tester to the DLC3.
  (b) Start the engine.
  (c) Turn the tester on.
  (d) Select the following menu items: DIAGNOSIS / ENHANCED OBD II / DATA LIST / PRIMARY / ENGINE SPD.
  The engine speed may be indicated as zero despite the engine revolving normally. This is caused by a lack of NE signals from the Crankshaft Position (CKP) sensor. Alternatively, the engine speed may be indicated as lower than the actual engine speed, if the CKP sensor voltage output is insufficient.
- Read freeze frame data using the intelligent tester. The ECM records vehicle and driving condition information as freeze frame data the moment a DTC is stored. When troubleshooting, freeze frame data can be helpful in determining whether the vehicle was running or stopped, whether the engine was warmed up or not, whether the air/fuel ratio was lean or rich, as well as other data recorded at the time of a malfunction.

ES

1	INSPECT CRANKSHAFT POSITION SENSOR (RESISTANCE)

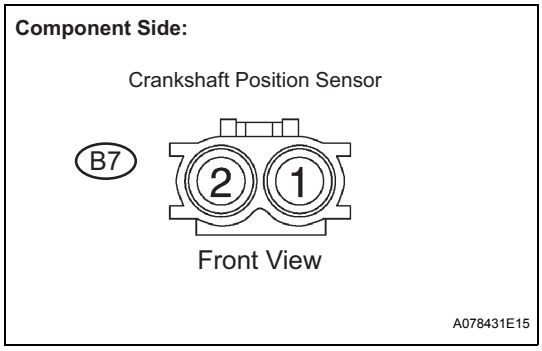

(a) Disconnect the B7 Crankshaft Position (CKP) sensor connector.
(b) Measure the resistance between terminals 1 and 2.
Standard resistance

Tester Connections	Specified Conditions
1 - 2	1,850 Ω to 2,450 Ω at 20°C (68°F)

HINT:
Terms cold and hot refer to the temperature of the coils.
Cold means approximately -10° to 50°C (14° to 122°F).
Hot means approximately 50° to 100°C (122° to 212°F).

(c) Reconnect the CKP sensor connector.

NG → **REPLACE CRANKSHAFT POSITION SENSOR**

OK

2 CHECK HARNESS AND CONNECTOR (CRANKSHAFT POSITION SENSOR - ECM)

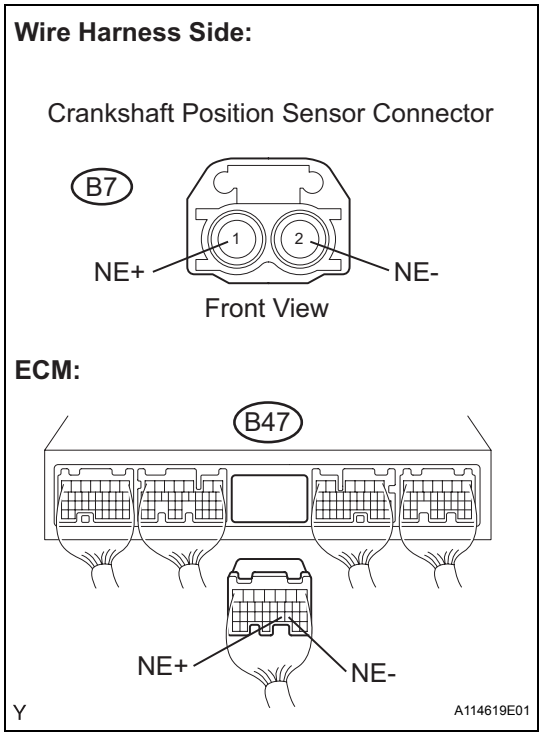

(a) Disconnect the B7 CKP sensor connector.
(b) Disconnect the B47 ECM connector.
(c) Measure the resistance.

Standard resistance (Check for open)

Tester Connections	Specified Conditions
NE+ (B7-1) - NE+ (B47-21)	Below 1 Ω
NE- (B7-2) - NE- (B47-20)	Below 1 Ω

Standard resistance (Check for short)

Tester Connections	Specified Conditions
NE+ (B7-1) or NE+ (B47-21) - Body ground	10 kΩ or higher
NE- (B7-2) or NE- (B47-20) - Body ground	10 kΩ or higher

(d) Reconnect the ECM connector.
(e) Reconnect the CKP sensor connector.

NG → **REPAIR OR REPLACE HARNESS OR CONNECTOR**

OK

3 CHECK SENSOR INSTALLATION (CRANKSHAFT POSITION SENSOR)

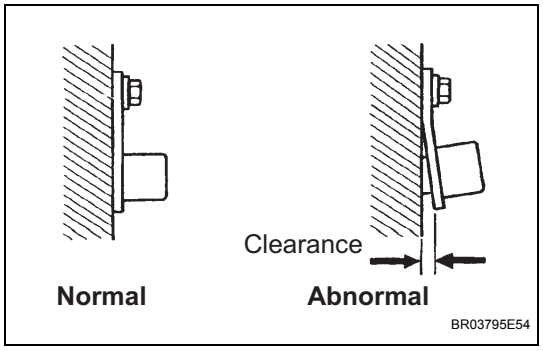

(a) Check the CKP sensor installation.

OK:

Sensor is installed correctly.

NG → **REPAIR OR REPLACE CRANKSHAFT POSITION SENSOR**

OK

4 CHECK CRANKSHAFT POSITION SENSOR PLATE (TEETH OF SENSOR PLATE)

(a) Check the teeth of the sensor plate.

OK:

Sensor plate does not have any cracks or deformation.

NG → **REPAIR OR REPLACE CRANKSHAFT POSITION SENSOR PLATE**

ES

OK

REPLACE ECM

DTC	P0340	Camshaft Position Sensor "A" Circuit (Bank 1 or Single Sensor)
DTC	P0342	Camshaft Position Sensor "A" Circuit Low Input (Bank 1 or Single Sensor)
DTC	P0343	Camshaft Position Sensor "A" Circuit High Input (Bank 1 or Single Sensor)
DTC	P0345	Camshaft Position Sensor "A" Circuit (Bank 2)
DTC	P0347	Camshaft Position Sensor "A" Circuit Low Input (Bank 2)
DTC	P0348	Camshaft Position Sensor "A" Circuit High Input (Bank 2)

ES

DESCRIPTION

The VVT sensor (G signal) consists of a magnet and MRE element.
The exhaust camshaft has 3 teeth on its inner circumference. When the camshaft gear rotates, the air gap changes between the protrusion on the gear and the pickup coil. The change affects the magnetic field, resulting in a change in the resistance of the MRE element. The crankshaft angle sensor plate has 34 teeth and outputs 34 signals every engine revolution. The ECM detects the standard crankshaft angle based on the G signal, actual crankshaft angle and engine speed by an NE signal.

DTC No.	DTC Detection Conditions	Trouble Areas
P0340 P0345	• Input voltage to ECM remains 0.3 V or less, or 4.7 V or higher for more than 5 seconds, when 2 or more seconds have elapsed after turning ignition switch ON (2 trip detection logic) • No VVT sensor signal to ECM during cranking (1 trip detection logic)	• Open or short in VVT sensor circuit for intake camshaft • VVT sensor for intake camshaft • Camshaft timing pulley • Jumped tooth of timing chain • ECM
P0342 P0347	Output voltage of VVT sensor is 0.3 V or less for 5 seconds (1 trip detection logic)	• Open or short in VVT sensor circuit for intake camshaft • VVT sensor for intake camshaft • Camshaft timing pulley • Jumped tooth of timing chain • ECM
P0343 P0348	Output voltage of VVT sensor is 4.7 V or more for 5 seconds (1 trip detection logic)	• Open or short in VVT sensor circuit for intake camshaft • VVT sensor for intake camshaft • Camshaft timing pulley • Jumped tooth of timing chain • ECM

Reference: Inspection using an oscilloscope

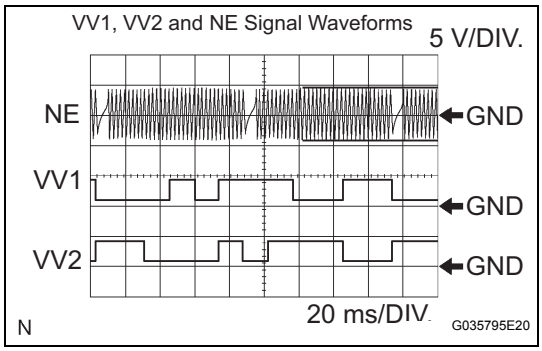

HINT:
- The correct waveform is shown on the illustration.
- VV1+ and VV2+ stand for the VVT sensor signal, and NE+ stands for the CKP sensor signal.

ES

Items	Contents
Terminals	NE+ - NE- VV1+ - VV1- VV2+ - VV2-
Equipment Settings	5V/Division, 20ms/Division
Conditions	Cranking or idling

MONITOR DESCRIPTION

If no signal is transmitted by the VVT sensor despite the engine revolving, or the rotations of the camshaft and the crankshaft are not synchronized, the ECM interprets this as a malfunction of the sensor.

MONITOR STRATEGY

Related DTCs	P0340: Camshaft position sensor (Bank 1) open/short P0340: Camshaft position/Crankshaft position misalignment (Bank 1) P0340: Camshaft position sensor (Bank 1) range check (Fluctuating) P0342: Camshaft position sensor (Bank 1) range check (low voltage) P0343: Camshaft position sensor (Bank 1) range check (high voltage) P0345: VVT sensor (Bank 2) open/short P0345: VVT position/Crankshaft position misalignment (Bank 2) P0345: VVT position sensor (Bank 2) range check (Fluctuating) P0347: VVT position sensor (Bank 2) range check (low voltage) P0348: VVT position sensor (Bank 2) range check (high voltage)
Required Sensors / Components (Main)	VVT position sensor (Bank 1 and 2)
Required Sensors / Components (Related)	Crankshaft position sensor
Frequency of Operation	Continuous
Duration	4 seconds: P0340 (Camshaft position sensor range check), P0340, P0342, P0343 (Camshaft position sensor range check (Fluctuating, Low voltage, High voltage)) P0345 (VVT sensor range check (While starting engine)), P0345, P0347, P0348 (VVT sensor range check (Fluctuation, Low voltage, High voltage)) 5 seconds: Others
MIL Operation	2 driving cycles: P0340 (Camshaft position sensor range check), P0345 (VVT sensor range check (While starting engine)) Immediate: Others
Sequence of Operation	None

TYPICAL ENABLING CONDITIONS

All:

The monitor will run whenever these DTCs are not present	None

Camshaft Position Sensor Range Check:

Starter	ON and not starter ON again
Minimal battery voltage while starter ON	Less than 11 V

Camshaft Position/Crankshaft Position Misalignment:

Engine RPM	600 rpm or more
Starter	OFF

Camshaft Position Sensor Range Check (Fluctuating, Low voltage, High voltage):

Starter	OFF
Ignition switch ON and time after ignition switch is OFF to ON	2 seconds or more

VVT sensor range check (While starting engine):

Starter	ON
Battery voltage while starter ON once at least	Less than 11 V

VVT sensor range check (After starting engine):

Engine RPM	600 rpm or more
Starter	OFF
Battery voltage	8 V or more
Ignition switch	ON

VVT sensor range check (Fluctuating, Low voltage, High voltage):

Starter	OFF
Ignition switch ON and time after ignition switch is OFF ON	2 seconds or more
Battery voltage	8 V or more

TYPICAL MALFUNCTION THRESHOLDS

Camshaft Position Sensor Range Check:

Camshaft position signal	No signal

Camshaft Position/Crankshaft Position Misalignment:

Camshaft position and crankshaft position phase	Mis-aligned

Camshaft Position Sensor Range Check (Fluctuating):

Camshaft position voltage	Less than 0.3 V, or more than 4.7 V

Camshaft Position Sensor Range Check (Low voltage):

Camshaft position voltage	Less than 0.3 V

Camshaft Position Sensor Range Check (High voltage):

Camshaft position voltage	More than 4.7 V

VVT sensor range check (While starting engine):

VVT sensor signal	No signal

VVT sensor range check (After starting engine):

VVT sensor signal	No signal

VVT sensor range check (Fluctuating):

VVT sensor voltage	Less than 0.3 V, or more than 4.7 V

VVT sensor range check (Low voltage):

VVT sensor voltage	Less than 0.3 V

VVT sensor range check (High voltage):

VVT sensor voltage	More than 4.7 V

COMPONENT OPERATING RANGE

VVT sensor voltage	0.3 to 4.7 V

WIRING DIAGRAM

Refer to DTC P0335 (See page ES-205).

INSPECTION PROCEDURE

ES

HINT:

Read freeze frame data using the intelligent tester. The ECM records vehicle and driving condition information as freeze frame data the moment a DTC is stored. When troubleshooting, freeze frame data can be helpful in determining whether the vehicle was running or stopped, whether the engine was warmed up or not, whether the air/fuel ratio was lean or rich, as well as other data recorded at the time of a malfunction.

1	CHECK ECM TERMINAL VOLTAGE

ECM:

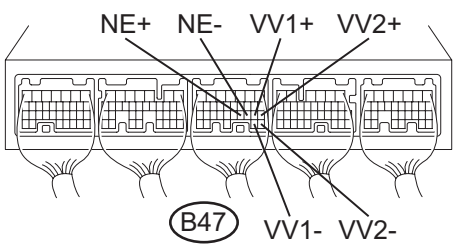

VV1, VV2 and NE Signal Waveforms

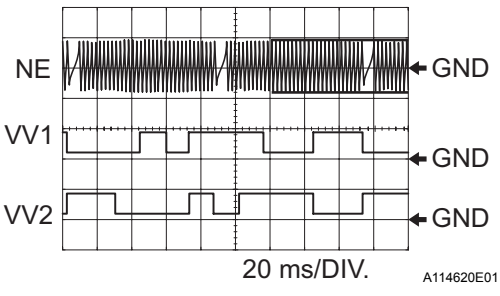

(a) Inspect the ECM using an oscilloscope.

(1) While the engine is idling, check the waveform between the terminals of the ECM connector.

OK

Tester Connections	Specified Conditions
VV1+ (B47-19) - VV1- (B47-29)	Correct waveform shown
VV2+ (B47-18) - VV2- (B47-28)	Correct waveform shown
NE+ (B47-21) - NE- (B47-20)	Correct waveform shown

OK → **REPLACE ECM**

NG

2	CHECK HARNESS AND CONNECTOR (VVT SENSOR - ECM)

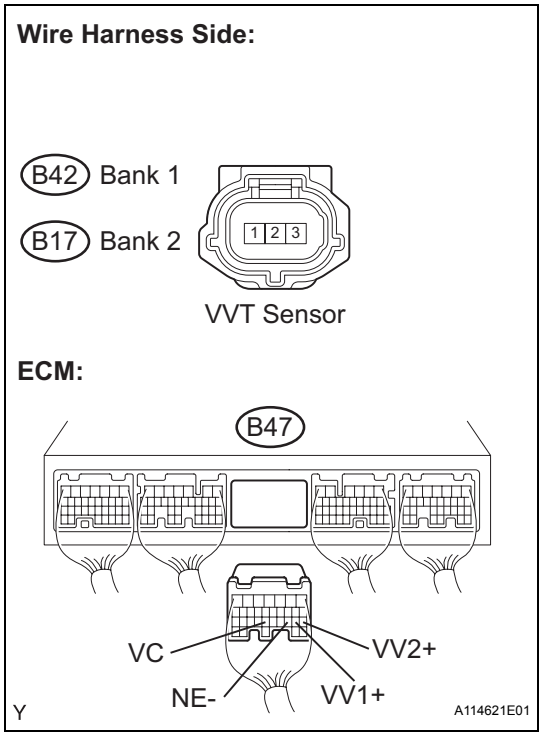

(a) Disconnect the B17 or B42 VVT sensor connector.
(b) Disconnect the B47 ECM connector.
(c) Measure the resistance.

Standard resistance (Check for open)

Tester Connections	Specified Conditions
VVT sensor (B42-1) - VV1+ (B47-19)	Below 1 Ω
VVT sensor (B17-1) - VV2+ (B47-18)	Below 1 Ω
VVT sensor (B17 or B42-3) - NE- (B47-20)	Below 1 Ω
VVT sensor (B17 or B42-3) - VC (B45-23)	Below 1 Ω

Standard resistance (Check for short)

Tester Connections	Specified Conditions
VVT sensor (B42-1) or VV1+ (B47-19) - Body ground	10 kΩ or higher
VVT sensor (B17 -1) or VV2+ (B47-18) - Body ground	10 kΩ or higher
VVT sensor (B17 or B42-3) or NE- (B47-20) - Body ground	10 kΩ or higher
VVT sensor (B17 or B42-3) or VC (B45-23) - Body ground	10 kΩ or higher

(d) Reconnect the VVT sensor connector.
(e) Reconnect the ECM connector.

NG → **REPAIR OR REPLACE HARNESS OR CONNECTOR**

OK

3	CHECK VVT SENSOR (SENSOR POWER SOURCE)

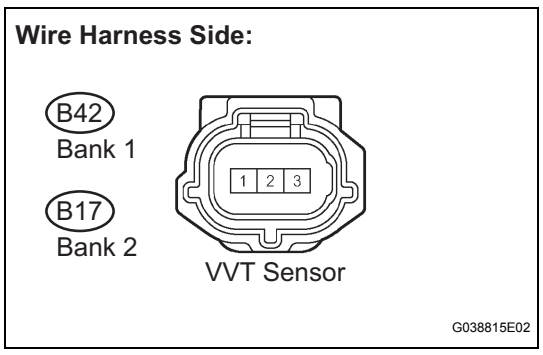

(a) Disconnect the B17 or B42 VVT sensor connector.
(b) Measure the voltage between the terminals of the VVT sensor.

Standard voltage

Tester Connections	Specified Conditions
3 - Body ground	4.5 to 5.0 V

(c) Reconnect the VVT sensor connector.

NG → **REPAIR OR REPLACE ECM**

OK

ES

4	CHECK SENSOR INSTALLATION (VVT SENSOR)

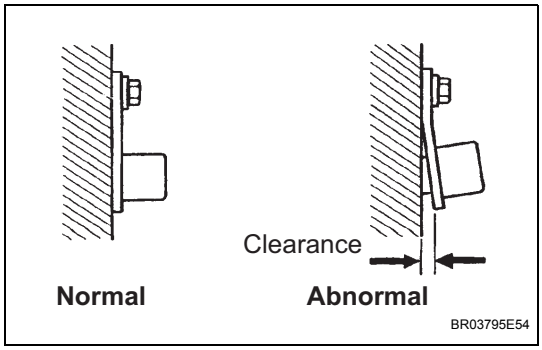

(a) Check the VVT sensor installation.
OK:
Sensor is installed correctly.

NG → **REPAIR OR REPLACE VVT SENSOR**

ES

OK

5	CHECK CAMSHAFT TIMING GEAR ASSEMBLY (TEETH OF PLATE)

(a) Check the teeth of the signal plate.
OK:
Sensor plate teeth do not have any cracks or deformation.

NG → **REPLACE CAMSHAFT TIMING GEAR ASSEMBLY**

OK

REPLACE ECM

DTC	P0351	Ignition Coil "A" Primary / Secondary Circuit
DTC	P0352	Ignition Coil "B" Primary / Secondary Circuit
DTC	P0353	Ignition Coil "C" Primary / Secondary Circuit
DTC	P0354	Ignition Coil "D" Primary / Secondary Circuit
DTC	P0355	Ignition Coil "E" Primary / Secondary Circuit
DTC	P0356	Ignition Coil "F" Primary / Secondary Circuit

HINT:
- These DTCs indicate malfunctions relating to the primary circuit.
- If DTC P0351 is set, check No. 1 ignition coil with igniter circuit.
- If DTC P0352 is set, check No. 2 ignition coil with igniter circuit.
- If DTC P0353 is set, check No. 3 ignition coil with igniter circuit.
- If DTC P0354 is set, check No. 4 ignition coil with igniter circuit.
- If DTC P0355 is set, check No. 5 ignition coil with igniter circuit.
- If DTC P0356 is set, check No. 6 ignition coil with igniter circuit.

DESCRIPTION

A Direct Ignition System (DIS) is used on this vehicle.
The DIS is a 1-cylinder ignition system in which each cylinder is ignited by one ignition coil and one spark plug is connected to the end of each secondary wiring. High-voltage is generated in the secondary wiring and then applied directly to each spark plug. The sparks of the spark plugs pass from the center electrodes to the ground electrodes.
The ECM determines the ignition timing and transmits the ignition (IGT) signals to each cylinder. Using the IGT signal, the ECM turns the power transistor inside the igniter on and off. The power transistor, in turn, switches on and off the current to the primary coil. When the current to the primary coil is cut off, high-voltage is generated in the secondary coil. This voltage is applied to the spark plugs, causing them to spark inside the cylinders. As the ECM cuts the current to the primary coil, the igniter sends back an ignition confirmation (IGF) signal to the ECM, for each cylinder ignition.

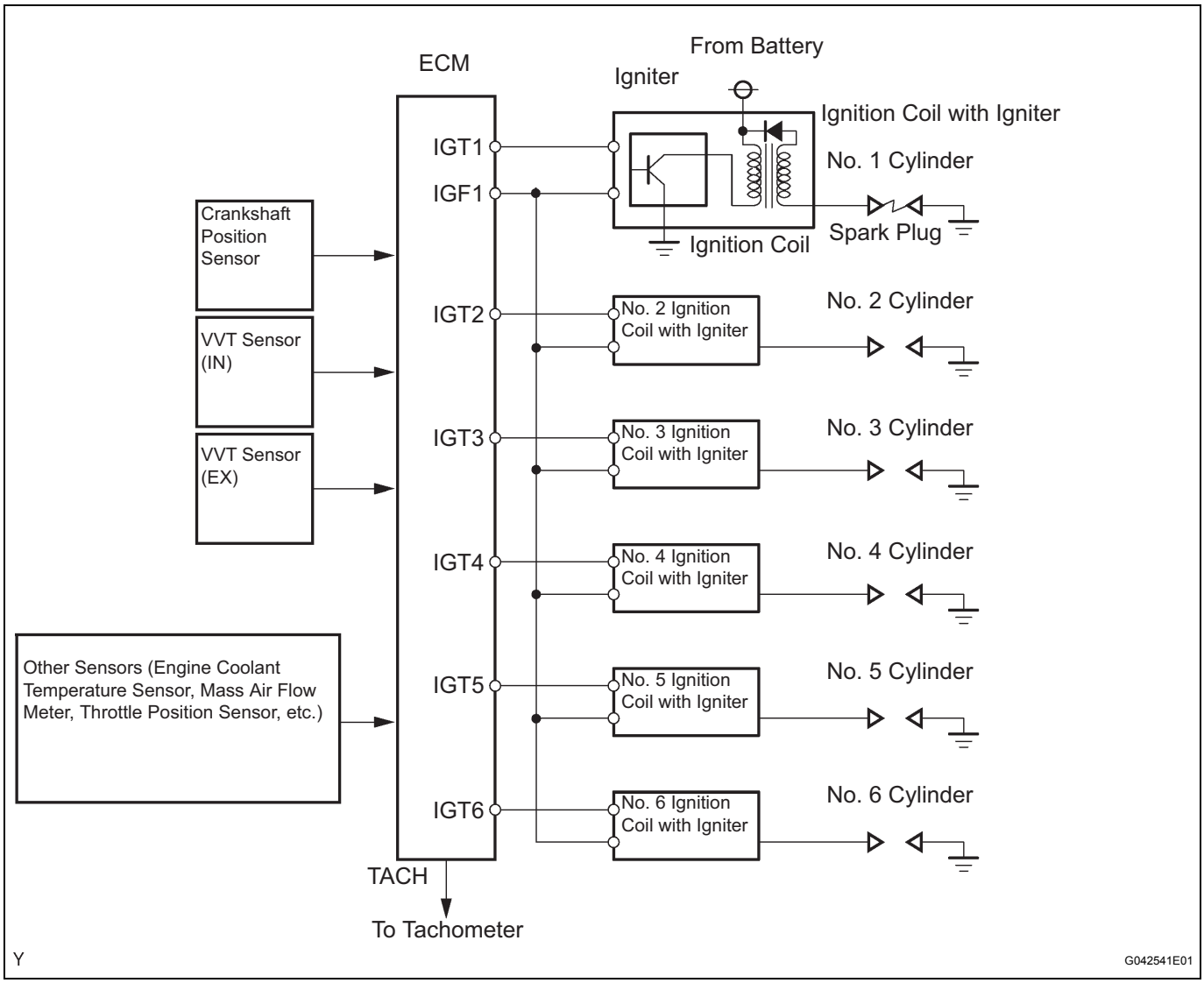

DTC No.	DTC Detection Conditions	Trouble Areas
P0351 P0352 P0353 P0354 P0355 P0356	No IGF signal to ECM while engine running (1 trip detection logic)	• Ignition system • Open or short in IGF1 or IGT circuit (1 to 6) between ignition coil with igniter and ECM • No. 1 to No. 6 ignition coils with igniters • ECM

Reference: Inspection using an oscilloscope

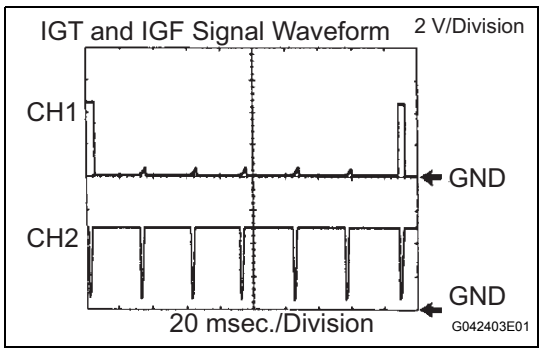

While cranking or idling, check the waveform between terminals IGT (1 to 6) and E1, and IGF1 and E1 of the ECM connector.

Items	Contents
Terminals	CH1: IGT1, IGT2, IGT3, IGT4, IGT5, IGT6 - E1 CH2: IGF1 - E1
Equipment Settings	2 V/Division, 20 ms/Division
Conditions	Cranking or idling

MONITOR DESCRIPTION

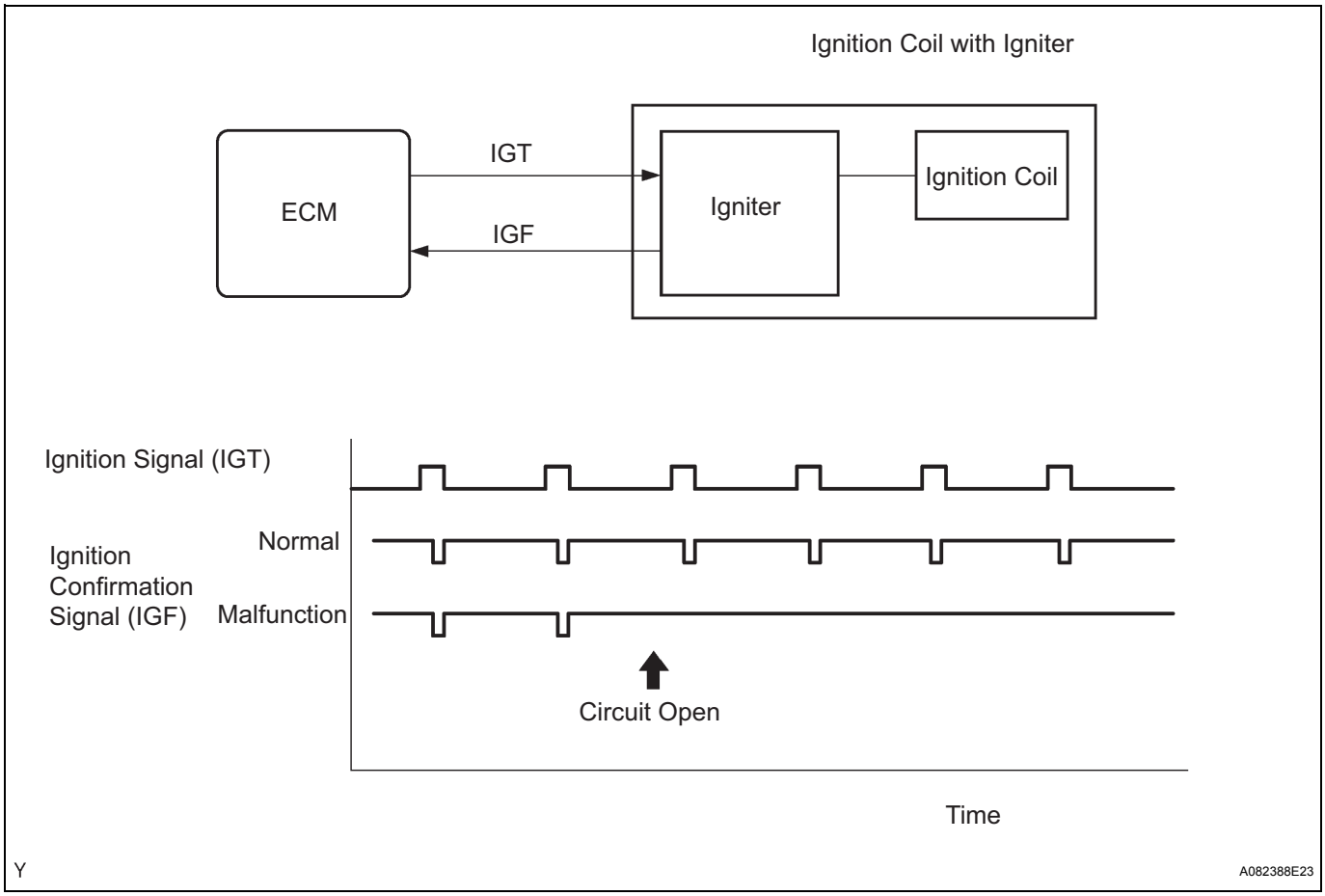

If the ECM does not receive any IGF signals despite transmitting the IGT signal, it interprets this as a fault in the igniter and sets a DTC.
If the malfunction is not repaired successfully, a DTC is set 1second after the engine is next started.

MONITOR STRATEGY

Related DTCs	P0351: Igniter (Cylinder 1) malfunction P0352: Igniter (Cylinder 2) malfunction P0353: Igniter (Cylinder 3) malfunction P0354: Igniter (Cylinder 4) malfunction P0355: Igniter (Cylinder 5) malfunction P0356: Igniter (Cylinder 6) malfunction
Required Sensors / Components (Main)	Igniter (Cylinder 1 to 6)
Required Sensors / Components (Related)	Crankshaft position sensor
Frequency of Operation	Continuous
Duration	0.256 seconds and 5 sparks
MIL Operation	Immediate

Sequence of Operation	None

TYPICAL ENABLING CONDITIONS

The monitor will run whenever these DTCs are not present	None
Either of following conditions met	Condition 1 or 2
1. Following conditions met:	Condition (a) and (b)
(a) Engine RPM	500 rpm or less
(b) Battery voltage	6 V or more
2. Following conditions met:	Condition (a) and (b)
(a) Engine RPM	More than 500 rpm
(b) Battery voltage	10 V or more

TYPICAL MALFUNCTION THRESHOLDS

Ignition signal fail count	More than 2 times
Ignition signal fail count is on the right:	When IGF does not return despite sending IGT.

COMPONENT OPERATING RANGE

IGF signal	Igniter transmits IGF signal when it receives IGT signal from ECM

WIRING DIAGRAM

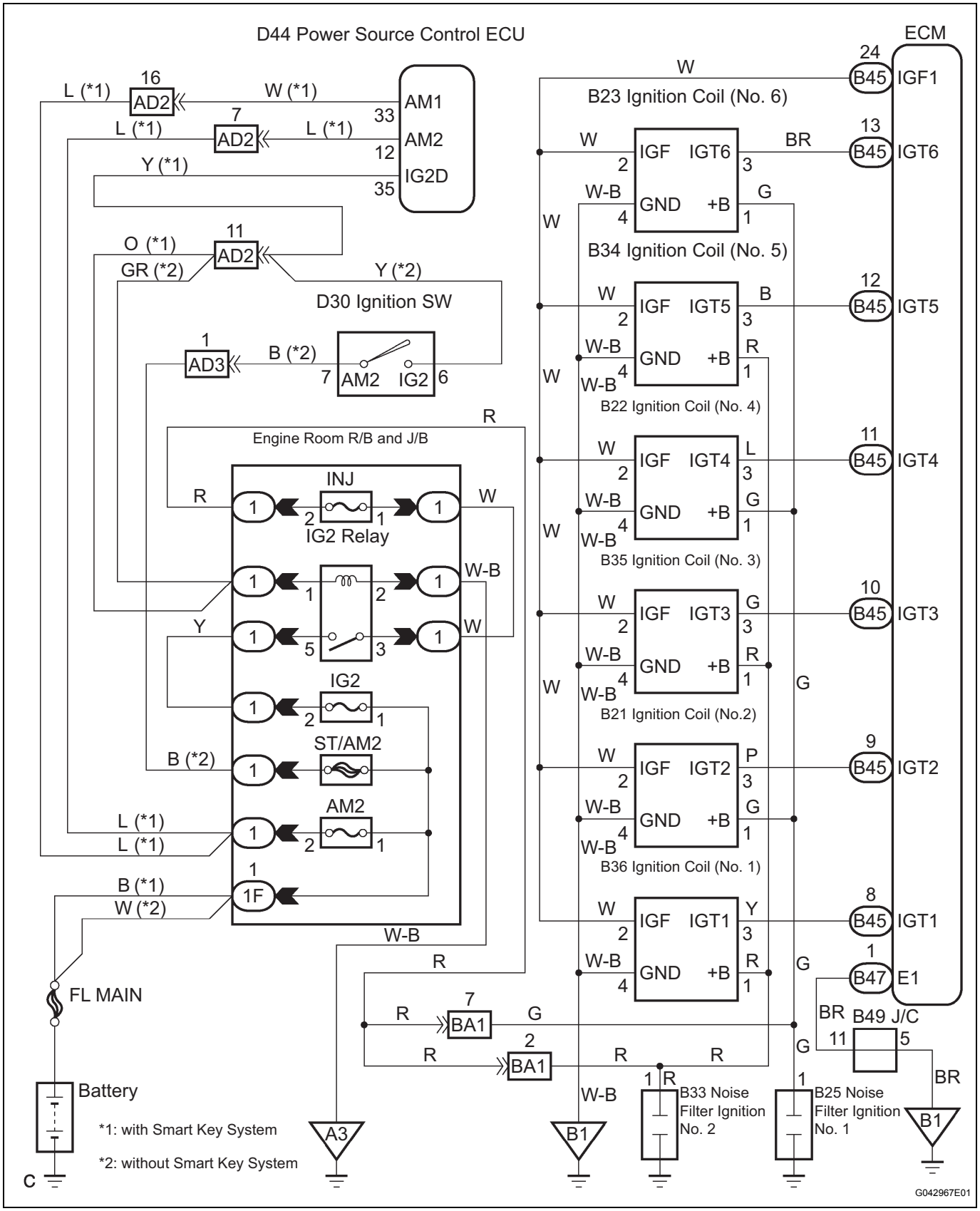

INSPECTION PROCEDURE

HINT:
Read freeze frame data using the intelligent tester. The ECM records vehicle and driving condition information as freeze frame data the moment a DTC is stored. When troubleshooting, freeze frame data can be helpful in determining whether the vehicle was running or stopped, whether the engine was warmed up or not, whether the air/fuel ratio was lean or rich, as well as other data recorded at the time of a malfunction.

1	CHECK SPARK PLUG AND CHECK SPARK OF MISFIRING CYLINDER

HINT:
(See page IG-6)

NG → Go to step 4

OK

2	CHECK HARNESS AND CONNECTOR (IGNITION COIL ASSEMBLY - ECM (IGF1 SIGNAL TERMINAL))

ECM:

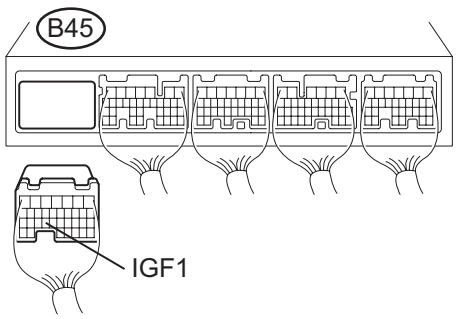

Wire Harness Side:

Ignition Coil with Igniter Connector

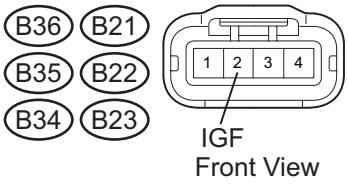

Y A114622E01

(a) Disconnect the B21, B22, B23, B34, B35 or B36 ignition coil with igniter connector.
(b) Disconnect the B45 ECM connector.
(c) Measure the resistance.

Standard resistance (Check for open)

Tester Connections	Specified Conditions
IGF (B36-2) - IGF1 (B45-24)	Below 1 Ω
IGF (B21-2) - IGF1 (B45-24)	Below 1 Ω
IGF (B35-2) - IGF1 (B45-24)	Below 1 Ω
IGF (B22-2) - IGF1 (B45-24)	Below 1 Ω
IGF (B34-2) - IGF1 (B45-24)	Below 1 Ω
IGF (B23-2) - IGF1 (B45-24)	Below 1 Ω

Standard resistance (Check for short)

Tester Connections	Specified Conditions
IGF (B36-2) or IGF1 (B45-24) - Body ground	10 kΩ or higher
IGF (B21-2) or IGF1 (B45-24) - Body ground	10 kΩ or higher
IGF (B35-2) or IGF1 (B45-24) - Body ground	10 kΩ or higher
IGF (B22-2) or IGF1 (B45-24) - Body ground	10 kΩ or higher
IGF (B34-2) or IGF1 (B45-24) - Body ground	10 kΩ or higher
IGF (B23-2) or IGF1 (B45-24) - Body ground	10 kΩ or higher

(d) Reconnect the ECM connector.
(e) Reconnect the ignition coil with igniter connector.

NG → REPAIR OR REPLACE HARNESS OR CONNECTOR

OK

3	INSPECT ECM (IGF1 VOLTAGE)

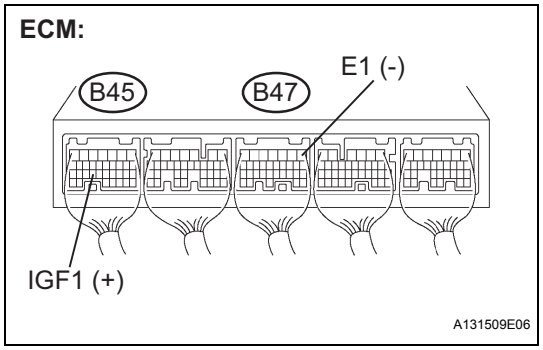

(a) Disconnect the ignition coil connector.
(b) Turn the ignition switch on (IG).
(c) Measure the voltage between the terminals of the B45 and B47 ECM connector.

Standard voltage

Tester Connections	Specified Conditions
IGF1 (B45-24) - E1 (B47-1)	4.5 to 5.5 V

(d) Reconnect the ignition coil connector.

NG → **REPLACE ECM**

ES

OK

REPLACE IGNITION COIL ASSEMBLY

4	CHECK HARNESS AND CONNECTOR (IGNITION COIL ASSEMBLY - ECM (IGT SIGNAL TERMINAL))

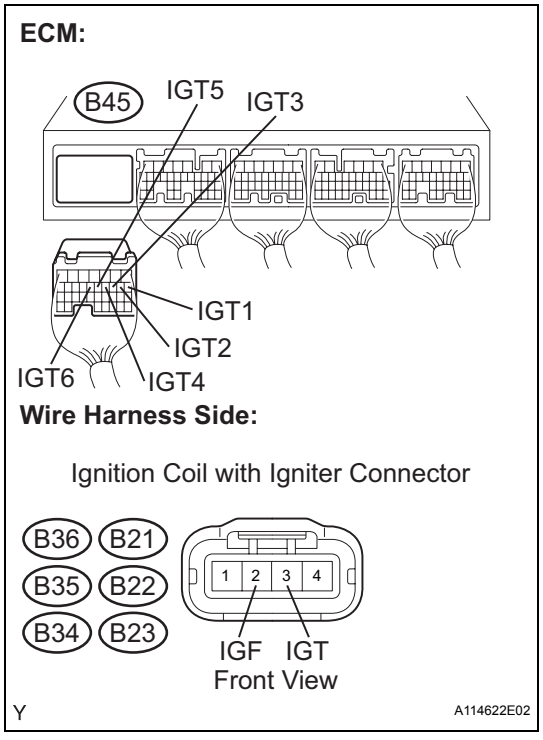

(a) Disconnect the B21, B22, B23, B34, B35 or B36 ignition coil with igniter connector.
(b) Disconnect the B45 ECM connector.
(c) Measure the resistance.

Standard resistance (Check for open)

Tester Connections	Specified Conditions
IGT (B36-3) - IGT1 (B45-8)	Below 1 Ω
IGT (B21-3) - IGT2 (B45-9)	Below 1 Ω
IGT (B35-3) - IGT3 (B45-10)	Below 1 Ω
IGT (B22-3) - IGT4 (B45-11)	Below 1 Ω
IGT (B34-3) - IGT5 (B45-12)	Below 1 Ω
IGT (B23-3) - IGT6 (B45-13)	Below 1 Ω

Standard resistance (Check for short)

Tester Connections	Specified Conditions
IGT (B36-3) or IGT1 (B45-8) - Body ground	10 kΩ or higher
IGT (B21-3) or IGT2 (B45-9) - Body ground	10 kΩ or higher
IGT (B35-3) or IGT3 (B45-10) - Body ground	10 kΩ or higher
IGT (B22-3) or IGT4 (B45-11) - Body ground	10 kΩ or higher
IGT (B34-3) or IGT5 (B45-12) - Body ground	10 kΩ or higher
IGT (B23-3) or IGT6 (B45-13) - Body ground	10 kΩ or higher

NG → **REPAIR OR REPLACE HARNESS OR CONNECTOR**

OK

5	INSPECT ECM (IGT1, IGT2, IGT3, IGT4, IGT5 OR IGT6 VOLTAGE)

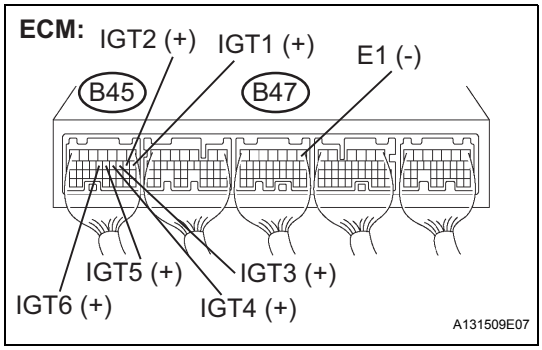

(a) Turn the ignition switch on (IG).
(b) Measure the voltage between the terminals of the B45 and B47 ECM connector.

Standard voltage

Tester Connections	Specified Conditions
IGT1 (B45-8) - E1 (B47-1)	0.1 to 4.5 V
IGT2 (B45-9) - E1 (B47-1)	0.1 to 4.5 V
IGT3 (B45-10) - E1 (B47-1)	0.1 to 4.5 V
IGT4 (B45-11) - E1 (B47-1)	0.1 to 4.5 V
IGT5 (B45-12) - E1 (B47-1)	0.1 to 4.5 V
IGT6 (B45-13) - E1 (B47-1)	0.1 to 4.5 V

NG → REPLACE ECM

OK

6	INSPECT ECM (IGT1, IGT2, IGT3, IGT4, IGT5 OR IGT6 VOLTAGE)

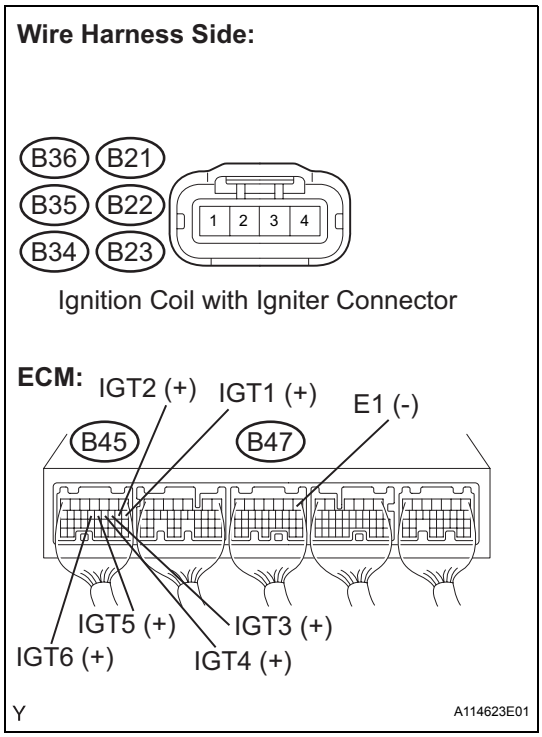

(a) Disconnect the B21, B22, B23, B34, B35 or B36 ignition coil connector.
(b) Turn the ignition switch on (IG).
(c) Measure the voltage between the terminals of the B45 and B47 ECM connector.

Standard voltage

Tester Connections	Specified Conditions
IGT1 (B45-8) - E1 (B47-1)	4.5 V or more
IGT2 (B45-9) - E1 (B47-1)	4.5 V or more
IGT3 (B45-10) - E1 (B47-1)	4.5 V or more
IGT4 (B45-11) - E1 (B47-1)	4.5 V or more
IGT5 (B45-12) - E1 (B47-1)	4.5 V or more
IGT6 (B45-13) - E1 (B47-1)	4.5 V or more

(d) Reconnect the ignition coil connector.

NG → REPLACE ECM

OK

7	INSPECT IGNITION COIL ASSEMBLY (POWER SOURCE)

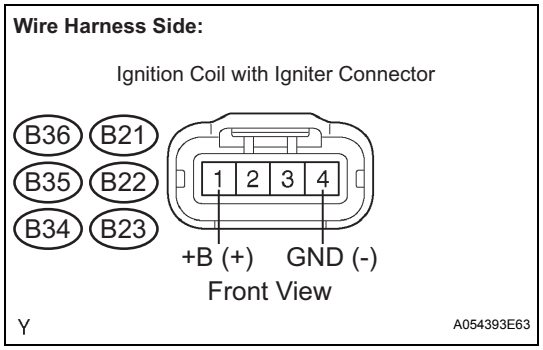

(a) Disconnect the B21, B22, B23, B34, B35 or B36 ignition coil with igniter connector.

(b) Measure the resistance.

Standard resistance (Check for open)

Tester Connections	Specified Conditions
GND (B36-4) - Body ground	Below 1 Ω
GND (B21-4) - Body ground	Below 1 Ω
GND (B35-4) - Body ground	Below 1 Ω
GND (B22-4) - Body ground	Below 1 Ω
GND (B34-4) - Body ground	Below 1 Ω
GND (B23-4) - Body ground	Below 1 Ω

(c) Turn the ignition switch on (IG).

(d) Measure the voltage between the terminals of the wire harness side connector.

Standard voltage

Tester Connections	Specified Conditions
+B (B36-1) - GND (B36-4)	9 to 14 V
+B (B21-1) - GND (B21-4)	9 to 14 V
+B (B35-1) - GND (B35-4)	9 to 14 V
+B (B22-1) - GND (B22-4)	9 to 14 V
+B (B34-1) - GND (B34-4)	9 to 14 V
+B (B23-1) - GND (B23-4)	9 to 14 V

(e) Reconnect the ignition coil with igniter connector.

NG → **Go to step 8**

OK ↓

REPLACE IGNITION COIL ASSEMBLY

ES

8	CHECK HARNESS AND CONNECTOR (IGNITION COIL ASSEMBLY - IGNITION SWITCH)

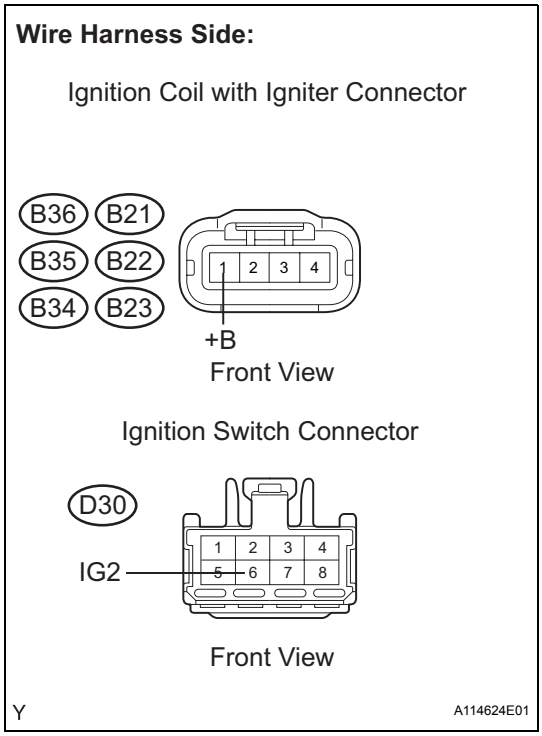

(a) Disconnect the B36, B21, B35, B22, B34 or B23 ignition coil with igniter connector.
(b) Disconnect the I7 ignition switch connector.
(c) Measure the resistance.

Standard resistance (Check for open)

Tester Connections	Specified Conditions
+B (B36-1) - IG2 (D30-6)	Below 1 Ω
+B (B21-1) - IG2 (D30-6)	Below 1 Ω
+B (B35-1) - IG2 (D30-6)	Below 1 Ω
+B (B22-1) - IG2 (D30-6)	Below 1 Ω
+B (B34-1) - IG2 (D30-6)	Below 1 Ω
+B (B23-1) - IG2 (D30-6)	Below 1 Ω

Standard resistance (Check for short)

Tester Connections	Specified Conditions
+B (B36-1) or IG2 (D30-6) - Body ground	10 kΩ or higher
+B (B21-1) or IG2 (D30-6) - Body ground	10 kΩ or higher
+B (B35-1) or IG2 (D30-6) - Body ground	10 kΩ or higher
+B (B22-1) or IG2 (D30-6) - Body ground	10 kΩ or higher
+B (B34-1) or IG2 (D30-6) - Body ground	10 kΩ or higher
+B (B23-1) or IG2 (D30-6) - Body ground	10 kΩ or higher

(d) Reconnect the ignition coil with igniter connector.
(e) Reconnect the ignition switch connector.

NG → **REPAIR OR REPLACE HARNESS OR CONNECTOR**

OK

REPLACE IGNITION COIL ASSEMBLY

DTC	P0365	Camshaft Position Sensor "B" Circuit (Bank 1)
DTC	P0367	Camshaft Position Sensor "B" Circuit Low Input (Bank 1)
DTC	P0368	Camshaft Position Sensor "B" Circuit High Input (Bank 1)
DTC	P0390	Camshaft Position Sensor "B" Circuit (Bank 2)
DTC	P0392	Camshaft Position Sensor "B" Circuit Low Input (Bank 2)
DTC	P0393	Camshaft Position Sensor "B" Circuit High Input (Bank 2)

DESCRIPTION

The VVT sensor (G signal) consists of a magnet and MRE element.
The exhaust camshaft has 3 teeth on its inner circumference. When the camshaft gear rotates, the air gap changes between the protrusion on the gear and the pickup coil. The change affects the magnetic field, resulting in a change in the resistance of the MRE element. The crankshaft angle sensor plate has 34 teeth and outputs 34 signals every engine revolution. The ECM detects the standard crankshaft angle based on the G signal, actual crankshaft angle and engine speed by an NE signal.

DTC No.	DTC Detection Conditions	Trouble Areas
P0365 P0390	STA ON: No VVT sensor signal to ECM during cranking for 4 seconds or more STA OFF: No VVT sensor signal to ECM with engine speed at 600 rpm or more	• Open or short in VVT sensor for exhaust camshaft circuit • VVT sensor for exhaust camshaft • Exhaust camshaft • ECM
P0367 P0368 P0392 P0393	No VVT sensor signal to ECM with engine speed at 600 rpm or more for 5 seconds or more. (1 trip detection logic)	• Open or short in VVT sensor for exhaust camshaft circuit • VVT sensor for exhaust camshaft • Exhaust camshaft • Jumped teeth of timing chain • ECM

MONITOR DESCRIPTION

If no signal is transmitted by the VVT (for exhaust camshaft) sensor despite the engine revolving, or the rotations of the exhaust camshaft and the crankshaft are not synchronized, the ECM interprets this as a malfunction of the sensor.

MONITOR STRATEGY

Related DTCs	P0365: Exhaust camshaft sensor (Bank 1) open/short P0365: Exhaust camshaft sensor misalignment (Bank 1) P0367: Exhaust camshaft sensor (Bank 1) range check (low voltage) P0368: Exhaust camshaft sensor (Bank 1) range check (high voltage) P0390: Exhaust camshaft sensor (Bank 2) range check P0392: Exhaust camshaft sensor (Bank 2) range check (low voltage) P0393: Exhaust camshaft sensor (Bank 2) range check (high voltage)
Required Sensors / Components (Main)	Exhaust camshaft sensor (Bank 1 and 2)

Required Sensors / Components (Related)	Exhaust camshaft sensor
Frequency of Operation	Continuous
Duration	5 seconds: Exhaust camshaft sensor range check (After starting engine) 4 seconds: Others
MIL Operation	2 driving cycles: Exhaust camshaft sensor range check (After starting engine) Immediate: Others
Sequence of Operation	None

TYPICAL ENABLING CONDITIONS

All:

The monitor will run whenever these DTCs are not present	None

ES

Exhaust Camshaft Sensor Range Check (While starting engine):

Starter	ON
Battery voltage while starter ON once at least	Less than 11 V

Exhaust Camshaft Sensor Range Check (After starting engine):

Engine RPM	600 rpm or more
Starter	OFF
Battery voltage	8 V or more
Ignition Switch	ON

Exhaust Camshaft Sensor Range Check (Fluctuating, Low voltage, High voltage):

Starter	OFF
Ignition Switch ON and time after ignition switch is OFF to ON	2 seconds or more
Battery voltage	8 V or more

TYPICAL MALFUNCTION THRESHOLDS

Exhaust Camshaft Sensor Range Check (While starting engine):

Exhaust camshaft sensor signal	No signal

Exhaust Camshaft Sensor Range Check (After starting engine):

Exhaust camshaft sensor signal	No signal

Exhaust Camshaft Sensor Range Check (Fluctuating):

Exhaust camshaft sensor signal	Less than 0.3 V, or more than 4.7 V

Exhaust Camshaft Sensor Range Check (Low voltage):

Exhaust camshaft sensor signal	Less than 0.3 V

Exhaust Camshaft Sensor Range Check (High voltage):

Exhaust camshaft sensor signal	More than 4.7 V

WIRING DIAGRAM

Refer to DTC P0335 (See page ES-205).

INSPECTION PROCEDURE

HINT:
Read freeze frame data using the intelligent tester. The ECM records vehicle and driving condition information as freeze frame data the moment a DTC is stored. When troubleshooting, freeze frame data can be helpful in determining whether the vehicle was running or stopped, whether the engine was warmed up or not, whether the air/fuel ratio was lean or rich, as well as other data recorded at the time of a malfunction.

1 CHECK ECM TERMINAL VOLTAGE

ECM:

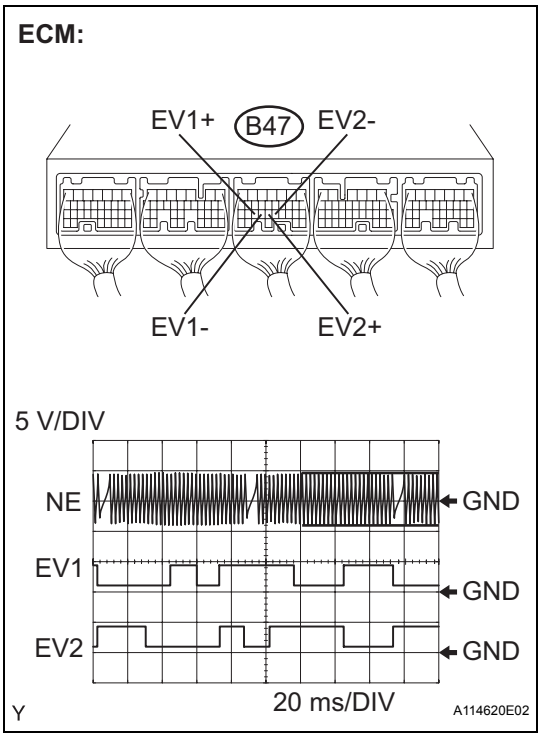

(a) Inspect using an oscilloscope.
(1) While the engine is idling, check the waveform of the ECM connector.
Standard

Tester Connections	Specified Conditions
EV1+ (B47-25) - EV1- (B47-24)	Correct waveform is as shown on the left
EV2+ (B47-23) - EV2- (B47-22)	Correct waveform is as shown on the left

OK → **REPLACE ECM**

NG

2 CHECK VVT SENSOR FOR EXHAUST CAMSHAFT (SENSOR POWER SOURCE)

Wire Harness Side:

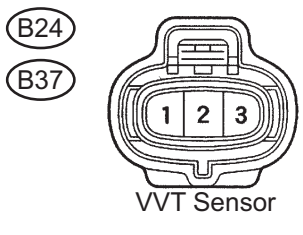

(a) Disconnect the VVT sensor connector.
(b) Measure the voltage between terminal 3 and body ground.
Standard voltage:
4.5 to 5.0 V

NG → **REPAIR OR REPLACE HARNESS OR CONNECTOR**

OK

3	CHECK HARNESS AND CONNECTOR (VVT SENSOR FOR EXHAUST CAMSHAFT - ECM)

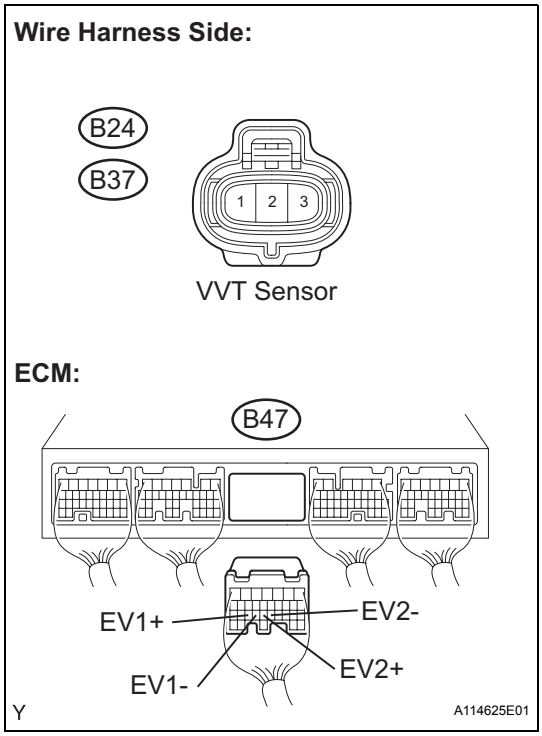

(a) Disconnect the VVT sensor for exhaust camshaft connector.
(b) Disconnect the B47 ECM connector.
(c) Measure the resistance between the wire harness side connectors.

Standard resistance (Check for open)

Tester Connections	Specified Conditions
VVT sensor (B37-1) - EV1+ (B47-25)	Below 1 Ω
VVT sensor (B37-2) - EV1- (B47-24)	Below 1 Ω
VVT sensor (B24-1) - EV2+ (B47-23)	Below 1 Ω
VVT sensor (B24-2) - EV2- (B47-22)	Below 1 Ω

Standard resistance (Check for short)

Tester Connections	Specified Conditions
VVT sensor (B37-1) - EV1+ (B47-25) - Body ground	10 kΩ or higher
VVT sensor (B37-2) - EV1- (B47-24) - Body ground	10 kΩ or higher
VVT sensor (B24-1) - EV2+ (B47-23) - Body ground	10 kΩ or higher
VVT sensor (B24-2) - EV2- (B47-22) - Body ground	10 kΩ or higher

NG → REPAIR OR REPLACE HARNESS OR CONNECTOR

OK

4	CHECK SENSOR INSTALLATION (VVT SENSOR FOR EXHAUST CAMSHAFT)

(a) Check the VVT sensor installation.

OK:

Sensor is installed correctly.

NG → TIGHTEN SENSOR

OK

5	CHECK EXHAUST CAMSHAFT (TEETH OF PLATE)

(a) Remove the cylinder head cover.
(b) Check the teeth of the signal plate.

NG → REPLACE EXHAUST CAMSHAFT

OK

REPLACE VVT SENSOR FOR EXHAUST CAMSHAFT

DTC	P0420	Catalyst System Efficiency Below Threshold (Bank 1)

DTC	P0430	Catalyst System Efficiency Below Threshold (Bank 2)

MONITOR DESCRIPTION

The ECM uses sensors mounted before and after the three-way catalyst (TWC) to monitor its efficiency. The first sensor, an Air Fuel ratio (A/F) sensor, sends pre-catalyst A/F ratio information to the ECM. The second sensor, a heated oxygen sensor (O2S), sends post-catalyst information to the ECM. The ECM compares these 2 signals to judge the efficiency of the catalyst and the catalyst's ability to store oxygen. During normal operation, the TWC stores and releases oxygen as needed. The capacity to store oxygen results in a low variation in the post-TWC exhaust stream.

If the catalyst is functioning normally, the waveform of the heated oxygen sensor slowly switches between RICH and LEAN. If the catalyst is deteriorated, the waveform will alternate frequently between RICH and LEAN. As the catalyst efficiency degrades, its ability to store oxygen is reduced and the catalyst output becomes more variable. When running the monitor, the ECM compares sensor 1 signals (A/F sensor) over a specific amount of time to determine catalyst efficiency. The ECM begins by calculating the signal length for both sensors (for the rear oxygen sensor, the ECM uses the output voltage signal length). If the oxygen sensor output voltage signal length is greater than the threshold (threshold is calculated based on the A/F sensor signal length), the ECM concludes that the catalyst is malfunctioning. The ECM will turn on the MIL and a DTC will be set.

DTC No.	DTC Detection Conditions	Trouble Areas
P0420	OSC value is smaller than standard value under active air-fuel ratio control (2 trip detection logic)	• Gas leakage from exhaust system • A/F sensor (bank 1 sensor 1) • HO2 sensor (bank 1 sensor 2) • Exhaust manifold (TWC)
P0430	OSC value is smaller than standard value under active air-fuel ratio control (2 trip detection logic)	• Gas leakage from exhaust system • A/F sensor (bank 2 sensor 1) • HO2 sensor (bank 2 sensor 2) • Exhaust manifold (TWC)

HINT:

- Bank 1 refers to the bank that includes cylinder No. 1.
- Bank 2 refers to the bank that does not include cylinder No. 1.
- Sensor 1 refers to the sensor closest to the engine assembly.
- Sensor 2 refers to the sensor farthest away from the engine assembly.

MONITOR STRATEGY

Related DTCs	P0420: Catalyst Deterioration P0430: Catalyst Deterioration
Required Sensors / Components (Main)	TWC
Required Sensors / Components (Related)	A/F sensor, heated oxygen sensor, intake air temperature sensor, mass air flow meter, crankshaft position sensor and engine coolant temperature sensor
Frequency of Operation	Once per driving cycle
Duration	30 seconds
MIL Operation	2 driving cycles
Sequence of Operation	None

TYPICAL ENABLING CONDITIONS

The monitor will run whenever these DTCs are not present	P0011, P0012 (VVT System-Advance, Retard), P0021, P0022 (VVT System2-Adavance, Retard), P0031, P0032, P0051, P0052 (A/F Sensor Heater Sensor 1), P0037, P0038, P0057, P0058 (O2 Sensor heater Sensor 2), P0100, P0101, P0102, P0103 (MAF Sensor), P0115, P0116, P0117, P0118 (ECT Sensor), P0120, P0121, P0122, P0123, P0220, P0222, P0223 , P2135 (TP Sensor), P0125 (Insufficient ECT for Closed Loop), P0136, P0137, P0138 (O2 Sensor 1), P0136 (O2 Sensor 2), P0171,P0172 (Fuel System), P0300, P0301, P0302, P0303, P0304, P0305, P0306 (Misfire), P0335 (CKP Sensor), P0340, P0342, P0343, P0345 (VVT Sensor 1, 2), P0351, P0352, P0353, P0354, P0355, P0356 (Ignitor), P0500 (VSS), P2196 (A/F Sensor (Rationality)), P2A00, P2A03 (A/F Sensor (Slow Response))
Battery voltage	11 V or more
IAT	-10°C (14°F) or more
ECT	75°C (167°F) or more
Atmospheric pressure coefficient	0.75 or more
Idle	OFF
Engine RPM	Less than 3,200 rpm
A/F sensor	Activated
Fuel system status	Closed loop
Engine load	10 to 70%
All of the following conditions are met	Condition 1, 2 and 3
1. Mass air flow rate	5 to 50 g/sec.
2. Front catalyst temperature (estimated)	620 to 820°C (1,148 to 1,508°F)
3. Rear catalyst temperature (estimated)	100 to 900°C (212 to 1,652°F)
Rear HO2S monitor	Completed
Shift position	4th or more

TYPICAL MALFUNCTION THRESHOLDS

Oxygen Storage Capacity (OSC) of catalyst	Less than 0.008 g (0.0000176 lb)

MONITOR RESULT

Refer to Checking Monitor Status for detailed information (See page ES-25).

Catalyst bank 1 - Active A/F control method

MID	TID	Scaling	Description of Test Value	Minimum Test Limit	Maximum Test Limit
$21	$A9	Multiply by 0.0003 [no dimension]	Oxygen storage capacity of catalyst	Minimum test limit for catalyst	Maximum test limit for catalyst

Catalyst bank 2 - Active A/F control method

MID	TID	Scaling	Description of Test Value	Minimum Test Limit	Maximum Test Limit
$22	$A9	Multiply by 0.0003 [no dimension]	Oxygen storage capacity of catalyst	Minimum test limit for catalyst	Maximum test limit for catalyst

CONDITIONING FOR SENSOR TESTING

HINT:

Perform the operation with the engine speeds and durations described below prior to checking the waveforms of the A/F and HO2 sensors. This is in order to activate the sensors sufficiently to obtain the appropriate inspection results.

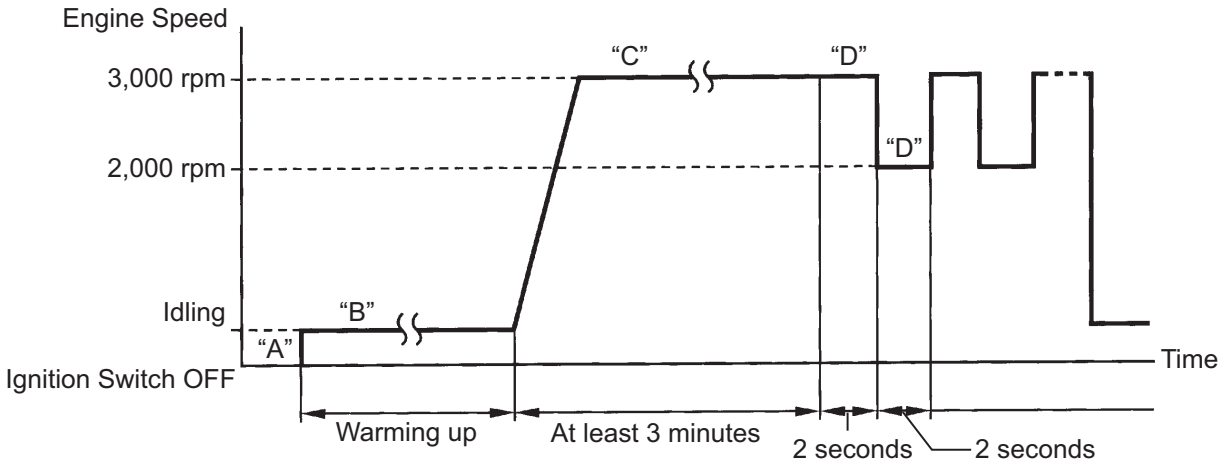

1. Connect the intelligent tester to the DLC3 (Procedure "A").
2. Start the engine and warm it up with all the accessories switched off, until the engine coolant temperature stabilizes (Procedure "B").
3. Run the engine at an engine speed of between 2,500 rpm and 3,000 rpm for at least 3 minutes (Procedure "C").
4. While running the engine at 3,000 rpm for 2 seconds and 2,000 rpm for 2 seconds, check the waveforms of the A/F and HO2 sensors using the tester (Procedure "D").
   HINT:
   - If either of the voltage outputs of the Air-Fuel Ratio (A/F) or Heated Oxygen (HO2) sensor does not fluctuate, or either of the sensors makes a noise, the sensor may be malfunctioning.
   - If the voltage outputs of both the sensors remain lean or rich, the air-fuel ratio may be extremely lean or rich. In such cases, perform the following A/F CONTROL using the intelligent tester.
   - If the Three-Way Catalytic Converter (TWC) has deteriorated, the HO2 sensor (located behind the TWC) voltage output fluctuates up and down frequently, even under normal driving conditions (active air-fuel ratio control is not performed).

Voltage output when active air-fuel ratio control not performed:

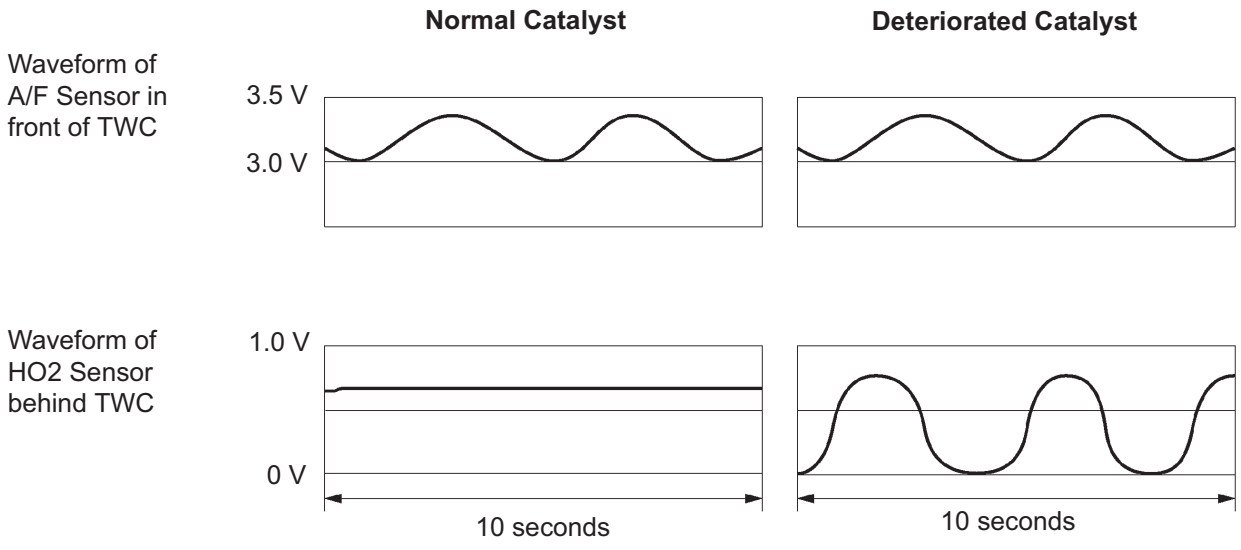

1. A/F CONTROL

HINT:

Intelligent tester only:

Malfunctioning areas can be identified by performing the A/F CONTROL function provided in the ACTIVE TEST. The A/F CONTROL function can help to determine whether the Air-Fuel Ratio (A/F) sensor, Heated Oxygen (HO2) sensor and other potential trouble areas are malfunctioning.

The following instructions describe how to conduct the A/F CONTROL operation using an intelligent tester.

(a) Connect the intelligent tester to the DLC3.

(b) Start the engine and turn the tester on.

(c) Warm up the engine at an engine speed of 2,500 rpm for approximately 90 seconds.

(d) On the tester, select the following menu items: DIAGNOSIS / ENHANCED OBD II / ACTIVE TEST / A/F CONTROL.

ES

(e) Perform the A/F CONTROL operation with the engine in an idling condition (press the RIGHT or LEFT button to change the fuel injection volume).

(f) Monitor the voltage outputs of the A/F and HO2 sensors (AFS B1S1 and O2S B1S2 or AFS B2S1 and O2S B2S2) displayed on the tester.

HINT:

- The A/F CONTROL operation lowers the fuel injection volume by 12.5% or increases the injection volume by 25%.
- Each sensor reacts in accordance with increases and decreases in the fuel injection volume.

Standard voltage

Tester Display (Sensor)	Injection Volumes	Status	Voltages
AFS B1S1 or AFS B2S1 (A/F)	+25%	Rich	Less than 3.0
AFS B1S1 or AFS B2S1 (A/F)	-12.5%	Lean	More than 3.35
O2S B1S2 or O2S B2S2 (HO2)	+25%	Rich	More than 0.55
O2S B1S2 or O2S B2S2 (HO2)	-12.5%	Lean	Less than 0.4

CAUTION:

The Air-Fuel Ratio (A/F) sensor has an output delay of a few seconds and the Heated Oxygen (HO2) sensor has a maximum output delay of approximately 20 seconds.

Case	A/F Sensor (Sensor 1) Output Voltage		HO2 Sensor (Sensor 2) Output Voltage		Main Suspected Trouble Area
1	Injection Volume +25% -12.5%		Injection Volume +25% -12.5%		-
	Output Voltage More than 3.35 V Less than 3.0 V		Output Voltage More than 0.55 V Less than 0.4 V		
2	Injection Volume +25% -12.5%		Injection Volume +25% -12.5%		• A/F sensor • A/F sensor heater • A/F sensor circuit
	Output Voltage Almost no reaction		Output Voltage More than 0.55 V Less than 0.4 V		
3	Injection Volume +25% -12.5%		Injection Volume +25% -12.5%		• HO2 sensor • HO2 sensor heater • HO2 sensor circuit
	Output Voltage More than 3.35 V Less than 3.0 V		Output Voltage Almost no reaction		

Case	A/F Sensor (Sensor 1) Output Voltage		HO2 Sensor (Sensor 2) Output Voltage		Main Suspected Trouble Area
4	Injection volume +25% -12.5%		Injection Volume +25% -12.5%		• Injector • Fuel pressure • Gas leakage from exhaust system (Air-fuel ratio extremely lean or rich)
	Output Voltage Almost no reaction	 NG	Output Voltage Almost no reaction	 NG	

- Following the A/F CONTROL procedure enables technicians to check the graph of the voltage outputs of both the A/F and HO2 sensors.
- To display the graph, select the following menu items on the tester: DIAGNOSIS / ENHANCED OBD II / ACTIVE TEST / A/F CONTROL / USER DATA / AFS B1S1 and O2S B1S2 or AFS B2S1 and O2S B2S2. Press the YES button and then the ENTER button. Then press the F4 button.

ES

INSPECTION PROCEDURE

HINT:
Read freeze frame data using the intelligent tester. The ECM records vehicle and driving condition information as freeze frame data the moment a DTC is stored. When troubleshooting, freeze frame data can be helpful in determining whether the vehicle was running or stopped, whether the engine was warmed up or not, whether the air/fuel ratio was lean or rich, as well as other data recorded at the time of a malfunction.

1	CHECK ANY OTHER DTCS OUTPUT (IN ADDITION TO DTC P0420 AND/OR P0430)

(a) Connect the intelligent tester to the DLC3.
(b) Turn the ignition switch on (IG) and turn the tester on.
(c) Select the following menu items: DIAGNOSIS / ENHANCED OBD II / DTC INFO / CURRENT CODES.
(d) Read DTCs.

Result

Display (DTC Output)	Proceed to
P0420 and/or P0430	A
P0420 and/or P0430 and other DTCs	B

HINT:
If any DTCs other than P0420 or P0430 are output, troubleshoot those DTCs first.

B → GO TO DTC CHART

A

2	PERFORM ACTIVE TEST BY INTELLIGENT TESTER (A/F CONTROL)

(a) Connect the intelligent tester to the DLC3.
(b) Start the engine and turn the tester on.
(c) Warm up the engine at an engine speed of 2,500 rpm for approximately 90 seconds.
(d) Select the following menu items on the tester: DIAGNOSIS / ENHANCED OBD II / ACTIVE TEST / A/F CONTROL.

(e) Perform the A/F CONTROL operation with the engine in an idling condition (press the RIGHT or LEFT button to change the fuel injection volume).

(f) Monitor the voltage outputs of the A/F and HO2 sensors (AFS B1S1 and O2S B1S2 or AFS B2S1 and O2S B2S2) displayed on the tester.
HINT:
- The A/F CONTROL operation lowers the fuel injection volume by 12.5% or increases the injection volume by 25%.
- Each sensor reacts in accordance with increases and decreases in the fuel injection volume.

ES

Standard voltage

Tester Display (Sensor)	Injection Volumes	Status	Voltages
AFS B1S1 or AFS B2S1 (A/F)	+25%	Rich	Less than 3.0
AFS B1S1 or AFS B2S1 (A/F)	-12.5%	Lean	More than 3.35
O2S B1S2 or O2S B2S2 (HO2)	+25%	Rich	More than 0.55
O2S B1S2 or O2S B2S2 (HO2)	-12.5%	Lean	Less than 0.4

Result

Status AFS B1S1 or AFS B2S1	Status O2S B1S2 or O2S B2S2	A/F Condition and A/F and HO2 Sensor Conditions	Misfires	Suspected Trouble Areas	Proceed to
Lean/Rich	Lean/Rich	Normal	-	• Three-Way Catalytic Converter (TWC) • Gas leakage from exhaust system	A
Lean	Lean/Rich	A/F sensor malfunction	-	A/F sensor	B
Rich	Lean/Rich	A/F sensor malfunction	-	A/F sensor	B
Lean/Rich	Lean	HO2 sensor malfunction	-	• HO2 sensor • Gas leakage from exhaust system	C
Lean/Rich	Rich	HO2 sensor malfunction	-	• HO2 sensor • Gas leakage from exhaust system	C
Lean	Lean	Actual air-fuel ratio lean	May occur	• Extremely rich or lean actual air-fuel ratio • Gas leakage from exhaust system	A
Rich	Rich	Actual air-fuel ratio rich	-	• Extremely rich or lean actual air-fuel ratio • Gas leakage from exhaust system	A

Lean: During A/F CONTROL, the A/F sensor output voltage (AFS) is consistently more than 3.35 V, and the HO2 sensor output voltage (O2S) is consistently less than 0.4 V.
Rich: During A/F CONTROL, the AFS is consistently less than 3.0 V, and the O2S is consistently more than 0.55 V.
Lean/Rich: During A/F CONTROL of the ACTIVE TEST, the output voltage of the HO2 sensor alternates correctly.

B → **CHECK AND REPLACE AIR FUEL RATIO SENSOR**

C → CHECK AND REPLACE HEATED OXYGEN SENSOR, AND CHECK AND REPAIR EXHAUST GAS LEAKAGE

A

3	CHECK FOR EXHAUST GAS LEAKAGE

OK:
No gas leakage.

NG → REPAIR OR REPLACE EXHAUST GAS LEAKAGE POINT

OK

REPLACE THREE-WAY CATALYTIC CONVERTER (EXHAUST MANIFOLD LH OR RH)

DTC	P043E	Evaporative Emission System Reference Orifice Clog Up

DTC	P043F	Evaporative Emission System Reference Orifice High Flow

DTC SUMMARY

DTCs	Monitoring Items	Malfunction Detection Conditions	Trouble Areas	Detection Timings	Detection Logic
P043E	0.02 inch orifice clogged	Vacuum pump creates negative pressure through 0.02 inch orifice, and EVAP system pressure is measured to determine leak pressure standard. 0.02 inch leak pressure standard measured at start and end of leak check. If system pressure is lower than -4.85 kPa (-36.38 mmHg)*, ECM determines that 0.02 inch orifice has clogging malfunction.	• Pump module • Connector/wire harness (Pump module - ECM) • ECM • Leakage from EVAP system	While ignition switch OFF	2 trip
P043F	0.02 inch orifice high-flow	Vacuum pump creates negative pressure through 0.02 inch orifice, and EVAP system pressure is measured to determine leak pressure standard. 0.02 inch leak pressure standard generated start and at end of leak check. If system pressure is higher than -1.06 kPa (-7.95 mmHg)*, ECM determines that 0.02 inch orifice has high-flow malfunction.	• Pump module • Connector/wire harness (Pump module - ECM) • ECM • Leakage from EVAP system	While ignition switch OFF	2 trip

*: The threshold values vary according to the atmospheric pressure measured at the beginning of the EVAP system monitor. The values described in the table above are based on an atmospheric pressure of 100 kPa (750.1 mmHg) (absolute pressure).
HINT:
The 0.02 inch orifice is located inside the pump module.

DESCRIPTION

The circuit description can be found in the EVAP (Evaporative Emission) System (See page ES-370).

INSPECTION PROCEDURE

Refer to the EVAP System (See page ES-373).

MONITOR DESCRIPTION

5 hours*1 after the ignition switch is turned off, the electric vacuum pump creates negative pressure (vacuum) in the EVAP (Evaporative Emission) system. The ECM monitors for leaks and actuator malfunctions based on the EVAP pressure.
HINT:
*1: If the engine coolant temperature is not below 35°C (95°F) 5 hours after the ignition switch is turned off, the monitor check starts 2 hours later. If it is still not below 35°C (95°F) 7 hours after the ignition switch is turned off, the monitor check starts 2.5 hours later.

Sequence	Operations	Descriptions	Duration
-	ECM activation	Activated by soak timer, 5 hours (7 or 9.5 hours) after ignition switch turned off.	-

Sequence	Operations	Descriptions	Duration
A	Atmospheric pressure measurement	Vent valve turned OFF (vent) and EVAP system pressure measured by ECM in order to register atmospheric pressure. If pressure in EVAP system is not between 70 kPa and 110 kPa (525 mmHg and 825 mmHg), ECM cancels EVAP system monitor.	10 seconds
B	First 0.02 inch leak pressure measurement	In order to determine 0.02 inch leak pressure standard, vacuum pump creates negative pressure (vacuum) through 0.02 inch orifice and then ECM checks if vacuum pump and vent valve operate normally.	60 seconds
C	EVAP system pressure measurement	Vent valve turned ON (closed) to shut EVAP system. Negative pressure (vacuum) is created in EVAP system, and EVAP system pressure then measured. Write down measured value as it will be used in leak check. If EVAP pressure does not stabilize within 15 minutes, ECM cancels EVAP system monitor.	15 minutes*2
D	Purge VSV monitor	Purge VSV is opened and then EVAP system pressure is measured by ECM. Large increase indicates normal.	10 seconds
E	Second 0.02 inch leak pressure measurement	After second 0.02 inch leak pressure measurement, leak check is performed by comparing first and second 0.02 inch leak pressure standards. If stabilized system pressure is higher than second 0.02 inch leak pressure standard, ECM determines that EVAP system leaking.	60 seconds
F	Final check	Atmospheric pressure is measured and then monitoring result is recorded by ECM.	-

*2: If there is only a small amount of fuel in the fuel tank, stabilizing the EVAP pressure takes longer than usual.

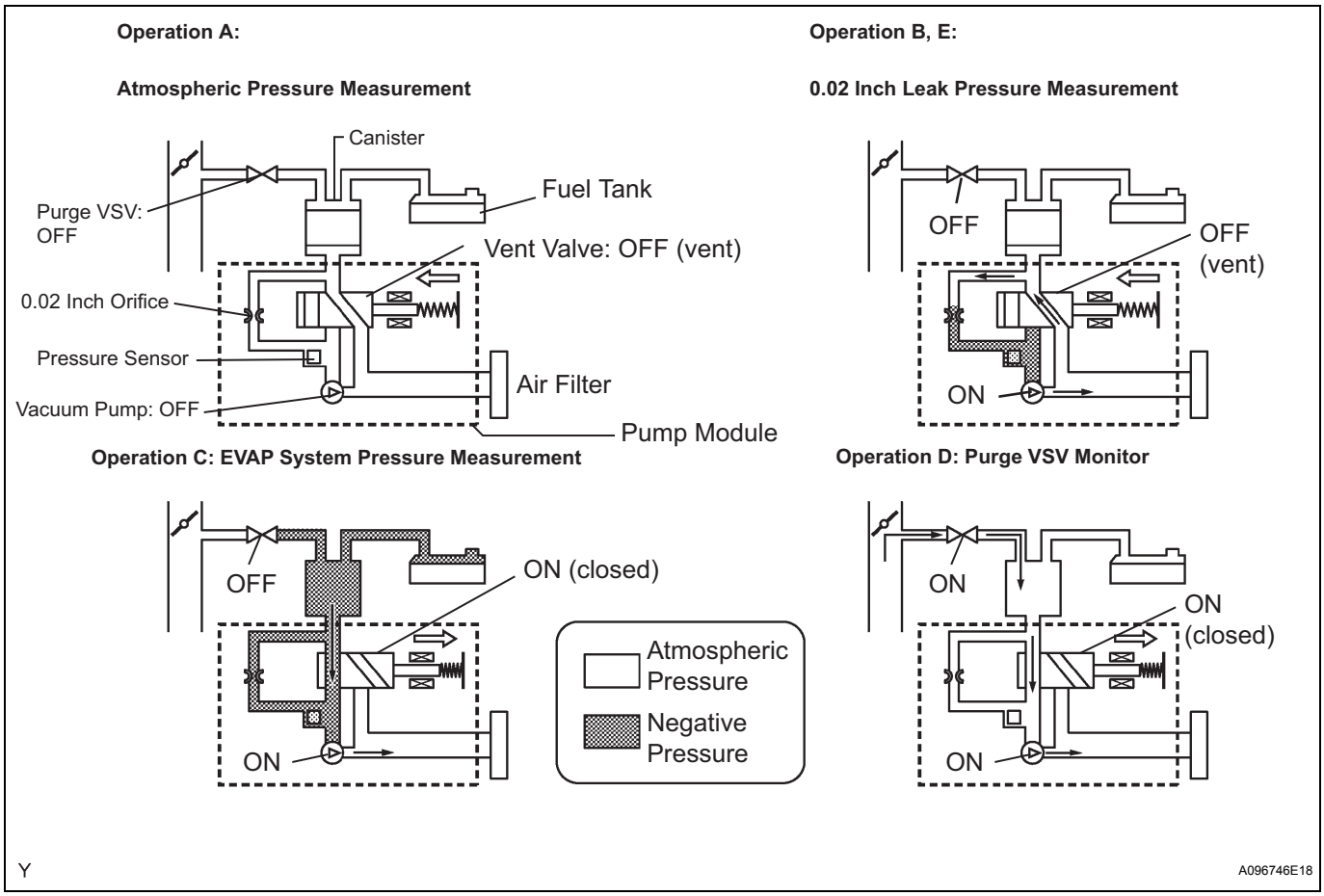

1. P043E: 0.02 inch orifice clogged
   In operation B, the vacuum pump creates negative pressure (vacuum) through the 0.02 inch orifice. The EVAP system pressure is then measured by the ECM, using the pressure sensor, to determine the 0.02 inch leak pressure standard. If the pressure is lower than -4.85 kPa (-36.38 mmHg)*, the ECM interprets this as a clog malfunction in the 0.02 inch orifice, and stops the EVAP (Evaporative Emission) system monitor.
   The ECM then illuminates the MIL and sets the DTC (2 trip detection logic).
   *: The threshold varies according to the atmospheric pressure measured in operation A. The value described above is based on an atmospheric pressure of 100 kPa (750.1 mmHg): absolute pressure.

EVAP Pressure when 0.02 Inch Orifice Clogged:

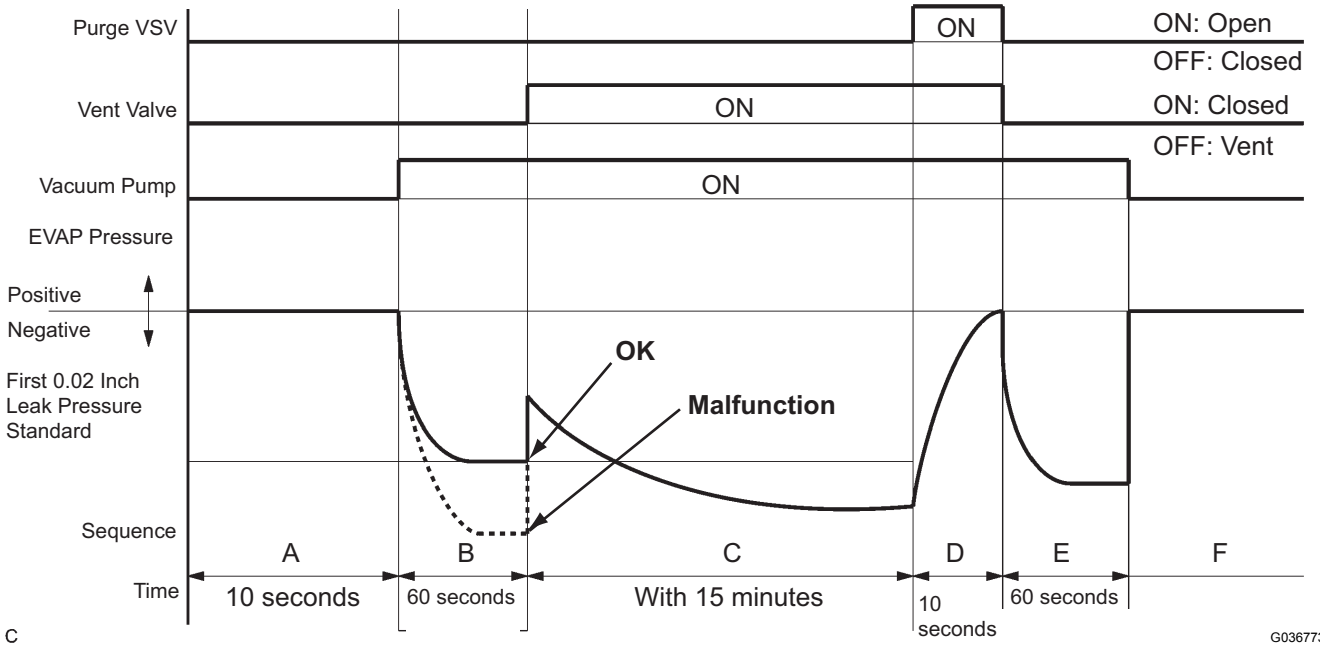

2. P043F: 0.02 inch orifice high-flow
In operation B, the vacuum pump creates negative pressure (vacuum) through the 0.02 inch orifice. The EVAP system pressure is then measured by the ECM using the pressure sensor to determine the 0.02 inch leak pressure standard. If the pressure is higher than -1.06 kPa (-7.95 mmHg)*, the ECM interprets this as a high-flow malfunction in the 0.02 inch orifice, and stops the EVAP system monitor. The ECM then illuminates the MIL and sets the DTC (2 trip detection logic).
*: The threshold varies according to the atmospheric pressure measured in operation A. The value described above is based on a atmospheric pressure of 100 kPa (750.1 mmHg): absolute pressure.

EVAP Pressure when 0.02 Inch Orifice High-flow Malfunction:

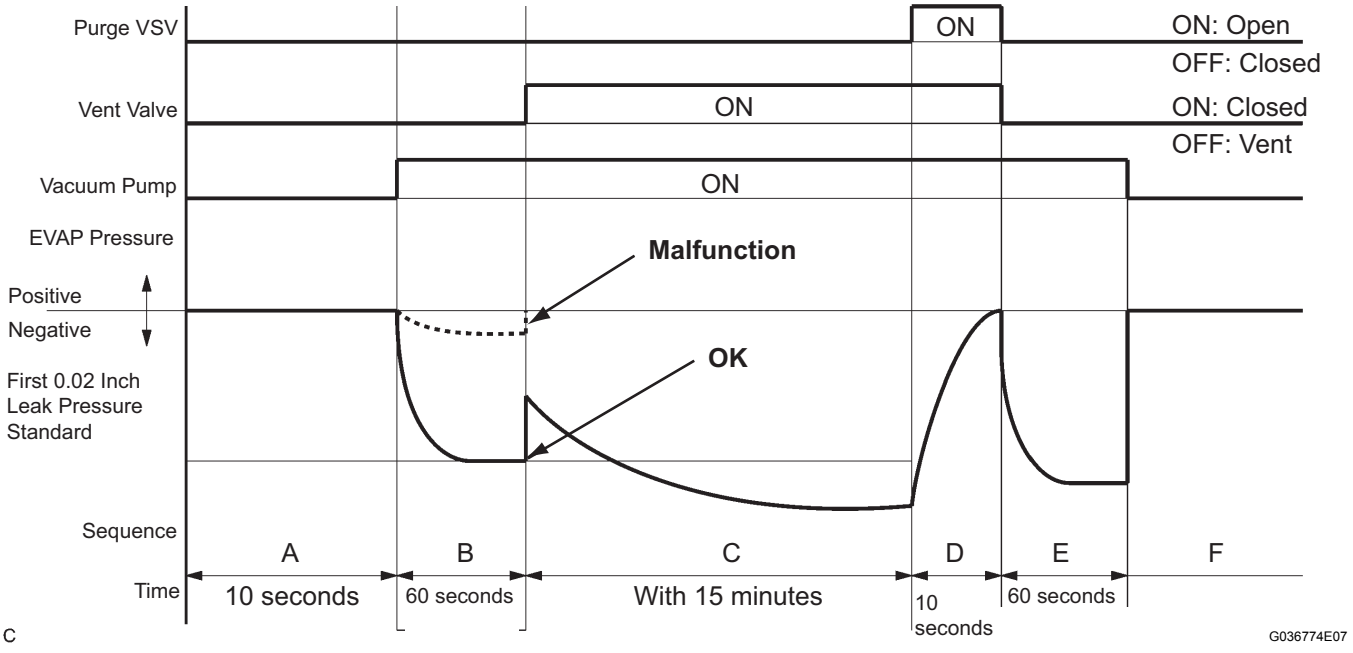

OBD II MONITOR SPECIFICATIONS

MONITOR STRATEGY

Related DTCs	P043E: 0.02 inch orifice clog (built-in pump module) P043F: 0.02 inch orifice high-flow (built-in pump module)
Required Sensors / Components	Pump module
Frequency of Operation	Once per driving cycle
Duration	Less than 2 minutes
MIL Operation	2 driving cycles
Sequence of Operation	None

TYPICAL ENABLING CONDITIONS

The monitor will run whenever these DTCs are not present	None
Key-off monitor is run when all of the following conditions met	-
Atmospheric pressure	70 to 110 kPa (525 to 825 mmHg)
Battery voltage	10.5 V or more
Vehicle speed	2.5 mph (4 km/h) or less
Ignition switch	OFF
Time after key-off	5 or 7 or 9.5 hours

EVAP pressure sensor malfunction (P0450, P0452, P0453)	Not detected
EVAP canister purge valve	Not operated by scan tool
EVAP canister vent valve	Not operated by scan tool
EVAP leak detection pump	Not operated by scan tool
Both of the following conditions 1 and 2 set before key-off	-
1. Duration that vehicle has been driven	5 minutes or more
2. EVAP purge operation	Performed
ECT	4.4 to 35°C (40 to 95°F)
IAT	4.4 to 35°C (40 to 95°F)

Key-off monitor sequence 1 to 8

1. Atmospheric pressure measurement

Next sequence is run if the following condition is met	-
Atmospheric pressure change	Less than 0.3 kPa (2.25 mmHg) in 1 second

2. First reference pressure measurement

Next sequence is run if the following conditions are met	Condition 1, 2 and 3
1. EVAP pressure just after reference pressure measurement start	-1 kPa (-7.5 mmHg) or less
2. Reference pressure	-4.85 to -1.057 kPa (-36.384 to -7.929 mmHg)
3. Reference pressure	Saturated

3. EVAP canister vent valve close stuck check

Next sequence is run if the following condition is met	-
EVAP pressure change after vent valve is ON	0.3 kPa (2.25 mmHg) or more

4. Vacuum introduction

Next sequence is run if the following condition is met	-
EVAP pressure	Saturated within 15 minutes

5. EVAP canister purge valve close stuck check

Next sequence is run if the following condition is met	-
EVAP pressure change after purge valve is open	0.3 kPa (2.25 mmHg) or more

6. Second reference pressure measurement

Next sequence is run if the following conditions are met	Condition 1, 2, 3 and 4
1. EVAP pressure just after reference pressure	-1 kPa (-7.5 mmHg) or less
2. Reference pressure	-4.85 to -1.057 kPa (-36.384 to -7.929 mmHg)
3. Reference pressure	Saturated
4. Difference between first reference pressure and second reference pressure	Less than 0.7 kPa (5.25 mmHg)

7. Leak check

Next sequence is run if the following condition is met	-
EVAP pressure when vacuum introduction is complete	Lower than second reference pressure

8. Atmospheric pressure measurement

EVAP monitor is complete if the following condition is met	-
Atmospheric pressure difference between sequence 1 and 8	Within 0.3 kPa (2.25 mmHg)

TYPICAL MALFUNCTION THRESHOLDS

One of following conditions met	-
EVAP pressure just after reference pressure measurement start	More than -1 kPa (-7.5 mmHg)
Reference pressure	Less than -4.85 kPa (-36.384 mmHg)
Reference pressure	-1.057 kPa (-7.929 mmHg) or more
Reference pressure	Not saturated
Difference between first reference pressure and second reference pressure	0.7 kPa (5.25 mmHg) or more

MONITOR RESULT

Refer to Monitor Result for detailed information (See page ES-25).

DTC	P0441	Evaporative Emission Control System Incorrect Purge Flow

DTC SUMMARY

DTCs	Monitoring Items	Malfunction Detection Conditions	Trouble Areas	Detection Timings	Detection Logic
P0441	Purge VSV (Vacuum Switching Valve) stuck open	Vacuum pump creates negative pressure (vacuum) in EVAP system and EVAP system pressure is measured. 0.02 inch leak pressure standard is measured at start and end of leak check. If stabilized pressure is higher than [second 0.02 inch leak pressure standard x 0.2], ECM determines that purge VSV is stuck open	• Purge VSV • Purge VSV circuit (between purge VSV and ECM) • Leakage from EVAP line (between purge VSV and intake manifold) • EVAP line clogged (between purge VSV and canister) • ECM	While ignition Switch OFF	2 trip
P0441	Purge VSV stuck closed	After EVAP leak check performed, purge VSV turned ON (open), and atmospheric air is introduced into EVAP system. 0.02 inch leak pressure standard is measured at the start and end of leak check. If pressure does not return to near atmospheric pressure, ECM determines that purge valve is stuck closed	• Purge VSV • Purge VSV circuit (between purge VSV and ECM) • Leakage from EVAP line (between purge VSV and intake manifold) • EVAP line clogged (between purge VSV and canister) • ECM	While ignition Switch OFF	2 trip
P0441	Purge flow	While engine running, the following conditions successively met: • Negative pressure is not created in EVAP system when purge VSV is turned ON (open) • EVAP system pressure change is less than 0.5 kPa (3.75 mmHg) when vent valve is turned ON (closed) • Atmospheric pressure change before and after purge flow monitor is less than 0.1 kPa (0.75 mmHg)	• Purge VSV • Purge VSV circuit (between purge VSV and ECM) • Leakage from EVAP line (between purge VSV and intake manifold) • EVAP line clogged (between purge VSV and canister) • ECM	While ignition Switch OFF	2 trip

DESCRIPTION

The circuit description can be found in the EVAP (Evaporative Emission) System (See page ES-370).

INSPECTION PROCEDURE

Refer to the EVAP System (See page ES-373).

MONITOR DESCRIPTION

The two monitors, Key-Off and Purge Flow, are used to detect malfunctions relating to DTC P0441. The Key-Off monitor is initiated by the ECM internal timer, known as the soak timer, 5 hours*1 after the ignition switch is turned off. The purge flow monitor runs while the engine is running.

1. KEY-OFF MONITOR

5 hours[*1] after the ignition switch is turned off, the electric vacuum pump creates negative pressure (vacuum) in the EVAP (Evaporative Emission) system. The ECM monitors for leaks and actuator malfunctions based on the EVAP pressure.

HINT:

[*1]: If the engine coolant temperature is not below 35°C (95°F) 5 hours after the ignition switch is turned off, the monitor check starts 2 hours later. If it is still not below 35°C (95°F) 7 hours after the ignition switch is turned off, the monitor check starts 2.5 hours later.

Sequence	Operations	Descriptions	Duration
-	ECM activation	Activated by soak timer, 5 hours (7 or 9.5 hours) after ignition switch turned off.	-
A	Atmospheric pressure measurement	Vent valve turned OFF (vent) and EVAP system pressure measured by ECM in order to register atmospheric pressure. If pressure in EVAP system is not between 70 kPa and 110 kPa (525 mmHg and 825 mmHg), ECM cancels EVAP system monitor.	10 seconds
B	First 0.02 inch leak pressure measurement	In order to determine 0.02 inch leak pressure standard, vacuum pump creates negative pressure (vacuum) through 0.02 inch orifice and then ECM checks if vacuum pump and vent valve operate normally.	60 seconds
C	EVAP system pressure measurement	Vent valve turned ON (closed) to shut EVAP system. Negative pressure (vacuum) is created in EVAP system, and EVAP system pressure then measured. Write down measured value as it will be used in leak check. If EVAP pressure does not stabilize within 15 minutes, ECM cancels EVAP system monitor.	15 minutes[*2]
D	Purge VSV monitor	Purge VSV is opened and then EVAP system pressure is measured by ECM. Large increase indicates normal.	10 seconds
E	Second 0.02 inch leak pressure measurement	After second 0.02 inch leak pressure measurement, leak check is performed by comparing first and second 0.02 inch leak pressure standards. If stabilized system pressure is higher than second 0.02 inch leak pressure standard, ECM determines that EVAP system leaking.	60 seconds
F	Final check	Atmospheric pressure is measured and then monitoring result is recorded by ECM.	-

[*2]: If there is only a small amount of fuel in the fuel tank, stabilizing the EVAP pressure takes longer than usual.

Operation A:

Atmospheric Pressure Measurement

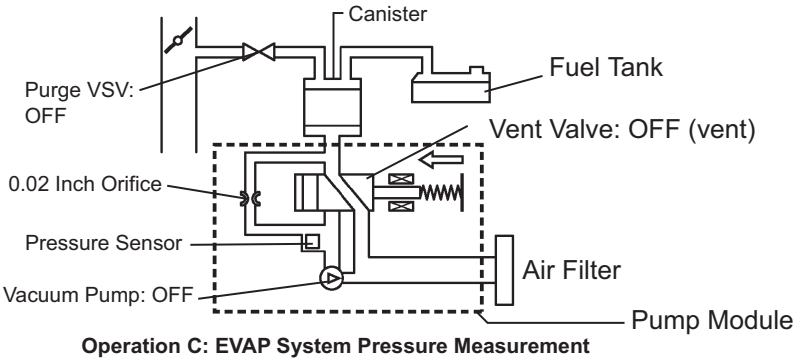

Operation B, E:

0.02 Inch Leak Pressure Measurement

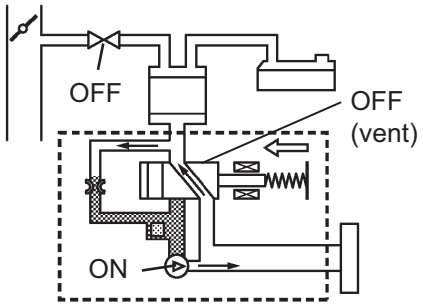

Operation C: EVAP System Pressure Measurement

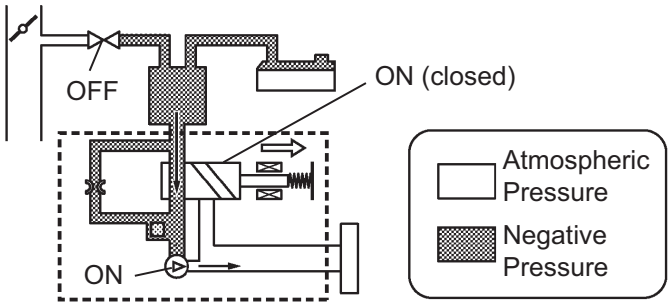

Operation D: Purge VSV Monitor

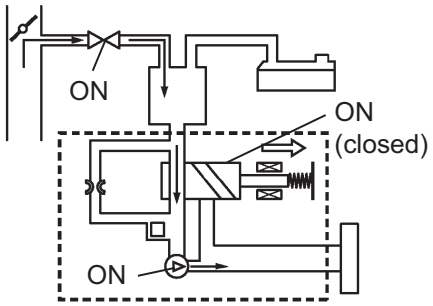

Y

A096746E18

(a) Purge VSV stuck open
In operation C, the vacuum pump creates negative pressure (vacuum) in the EVAP (Evaporative Emission) system. The EVAP system pressure is then measured by the ECM using the pressure sensor. If the stabilized system pressure is higher than [second 0.02 inch leak pressure standard x 0.2], the ECM interprets this as the purge VSV (Vacuum Switching Valve) being stuck open. The ECM illuminates the MIL and sets the DTC (2 trip detection logic).

EVAP Pressure when Purge VSV Stuck Open:

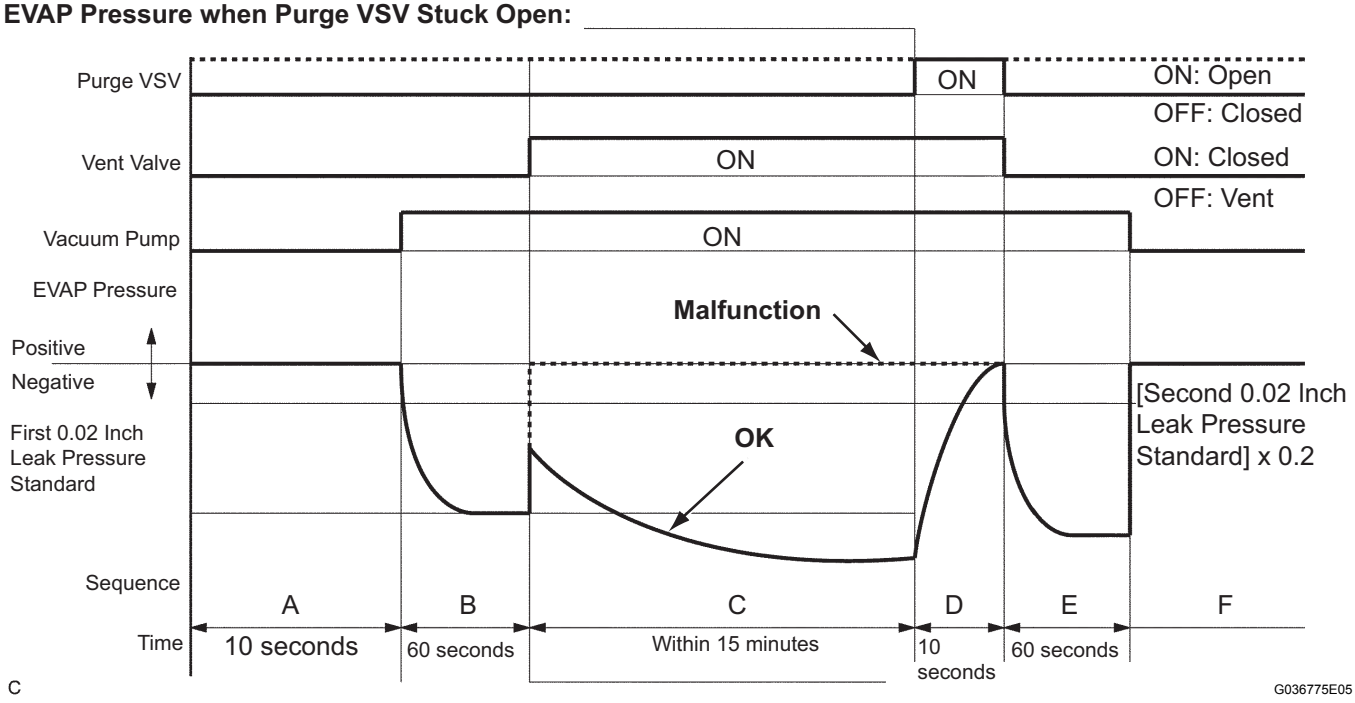

ES

(b) Purge VSV stuck closed
In operation D, the pressure sensor measures the EVAP (Evaporative Emission) system pressure. The pressure measurement for purge VSV monitor is begun when the purge VSV is turned on (open) after the EVAP leak check. When the measured pressure indicates an increase of 0.3 kPa (2.25 mmHg) or more, the purge VSV is functioning normally. If the pressure does not increase, the ECM interprets this as the purge VSV being stuck closed. The ECM illuminates the MIL and sets the DTC (2 trip detection logic).

EVAP Pressure when Purge VSV Stuck Closed:

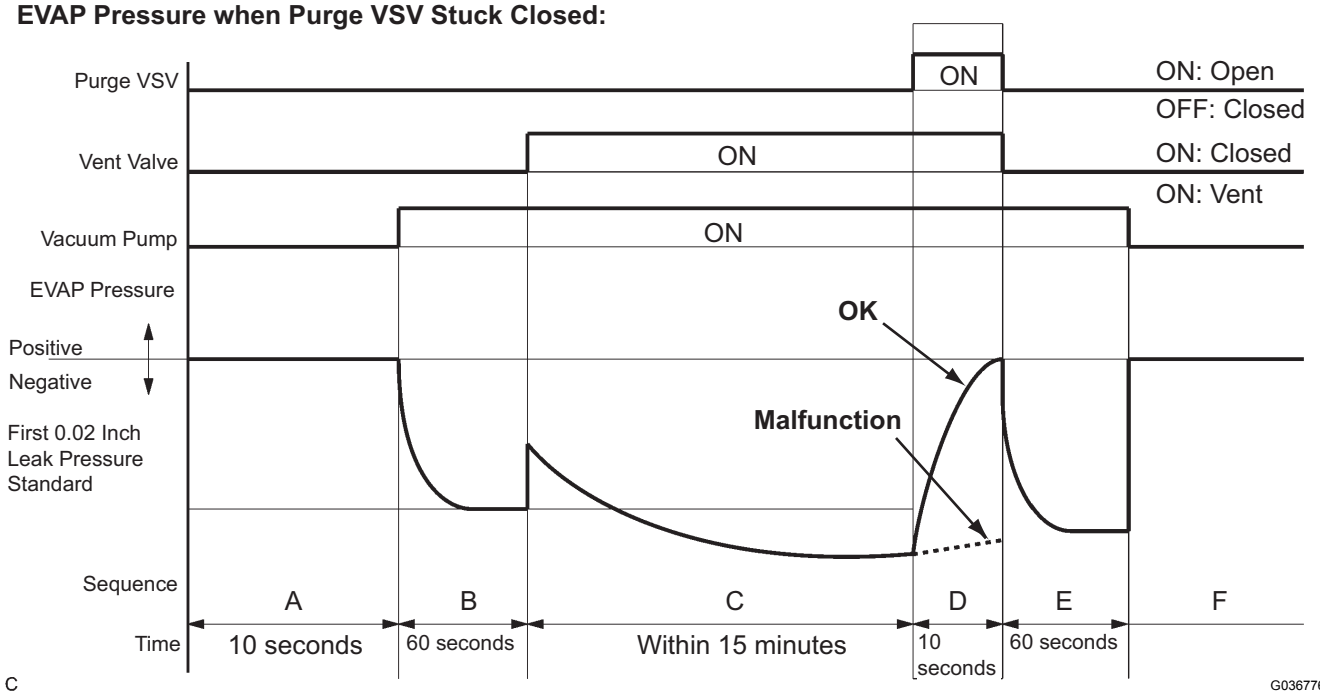

EVAP Pressure During Purge Flow Monitor:

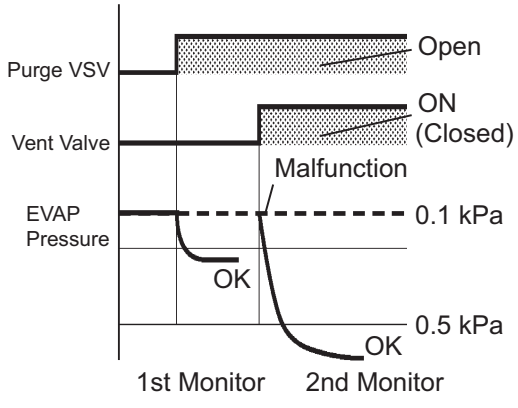

2. PURGE FLOW MONITOR

The purge flow monitor consists of the two step monitors. The 1st monitor is conducted every time and the 2nd monitor is activated if necessary.

- The 1st monitor
  While the engine is running and the purge VSV (Vacuum Switching Valve) is on (open), the ECM monitors the purge flow by measuring the EVAP pressure change. If negative pressure is not created, the ECM begins the 2nd monitor.
- The 2nd monitor
  The vent valve is turned on (closed) and the EVAP pressure is then measured. If the variation in the pressure is less than 0.5 kPa (3.75 mmHg), the ECM interprets this as the purge VSV being stuck closed, and illuminates the MIL and sets DTC P0441 (2 trip detection logic).

Atmospheric pressure check:
In order to ensure reliable malfunction detection, the variation between the atmospheric pressures, before and after conduction of the purge flow monitor, is measured by the ECM.

OBD II MONITOR SPECIFICATIONS

MONITOR STRATEGY

Related DTCs	P0441: Purge VSV stuck open P0441: Purge VSV stuck closed P0441: Purge flow
Required Sensors / Components	Purge VSV and pump module
Frequency of Operation	Once per driving cycle
Duration	Within 15 minutes
MIL Operation	2 driving cycles
Sequence of Operation	None

TYPICAL ENABLING CONDITIONS

All:

The monitor is run whenever this DTC is not present	P0011, P0012 (VVT System-Advance, Retard), P0021, P0022 (VVT System2-Adavance, Retard), P0100, P0101, P0102, P0103 (MAF Sensor), P0110, P0112, P0113 (IAT Sensor),P0115, P0116, P0117, P0118 (ECT Sensor), P0120, P0121, P0122, P0123, P0220, P0222, P0223 , P2135 (TP Sensor), P0125 (Insufficient ECT for Closed Loop), P0171,P0172 (Fuel System), P0300, P0301, P0302, P0303, P0304, P0305, P0306 (Misfire), P0335 (CKP Sensor), P0340, P0342, P0343, P0345 (VVT Sensor 1, 2), P0351, P0352, P0353, P0354, P0355, P0356 (Ignitor), P0450, P0451, P0452, P0453 (EVAP pressure Sensor), P0500 (VSS)

ES

Purge flow:

Engine	Running
ECT	4.4°C (40°F) or more
IAT	4.4°C (40°F) or more
EVAP pressure sensor	Not detected
EVAP canister purge valve	Not operated by scan tool
EVAP system check	Not operated by scan tool
Battery voltage	10 V or more
Purge duty cycle	8% or more

Purge VSV stuck open and closed:

Key-off monitor is run when all of the following conditions met	-
Atmospheric pressure	70 to 110 kPa (525 to 825 mmHg)
Battery voltage	10.5 V or more
Vehicle speed	2.5 mph (4 km/h) or less
Ignition switch	OFF
Time after key-off	5 or 7 or 9.5 hours
EVAP pressure sensor malfunction (P0450, P0452, P0453)	Not detected
EVAP canister purge valve	Not operated by scan tool
EVAP canister vent valve	Not operated by scan tool
EVAP leak detection pump	Not operated by scan tool
Both of the following conditions 1 and 2 set before key-off	-
1. Duration that vehicle has been driven	5 minutes or more
2. EVAP purge operation	Performed
ECT	4.4 to 35°C (40 to 95°F)
IAT	4.4 to 35°C (40 to 95°F)

Key-off monitor sequence 1 to 8

1. Atmospheric pressure measurement

Next sequence is run if the following condition is met	-
Atmospheric pressure change	Less than 0.3 kPa (2.25 mmHg) in 1 second

2. First reference pressure measurement

Next sequence is run if the following conditions are met	Condition 1, 2 and 3
1. EVAP pressure just after reference pressure measurement start	-1 kPa (-7.5 mmHg) or less
2. Reference pressure	-4.85 to -1.057 kPa (-36.384 to -7.929 mmHg)
3. Reference pressure	Saturated

3. EVAP canister vent valve close stuck check

Next sequence is run if the following condition is met	-
EVAP pressure change after vent valve is ON	0.3 kPa (2.25 mmHg) or more

4. Vacuum introduction

Next sequence is run if the following condition is met	-
EVAP pressure	Saturated within 15 minutes

5. EVAP canister purge valve close stuck check

Next sequence is run if the following condition is met	-
EVAP pressure change after purge valve is open	0.3 kPa (2.25 mmHg) or more

6. Second reference pressure measurement

Next sequence is run if the following conditions are met	Condition 1, 2, 3 and 4
1. EVAP pressure just after reference pressure	-1 kPa (-7.5 mmHg) or less
2. Reference pressure	-4.85 to -1.057 kPa (-36.384 to -7.929 mmHg)
3. Reference pressure	Saturated
4. Difference between first reference pressure and second reference pressure	Less than 0.7 kPa (5.25 mmHg)

7. Leak check

Next sequence is run if the following condition is met	-
EVAP pressure when vacuum introduction is complete	Lower than second reference pressure

8. Atmospheric pressure measurement

EVAP monitor is complete if the following condition is met	-
Atmospheric pressure difference between sequence 1 and 8	Within 0.3 kPa (2.25 mmHg)

TYPICAL MALFUNCTION THRESHOLDS

Purge flow:

Both of the following conditions are met	Condition (a) and (b)
(a) EVAP pressure change when purge flow is started	Less than 0.1 kPa (0.75 mmHg)
(b) EVAP pressure change during purge flow when EVAP pressure switching valve ON (closed)	Less than 0.5 kPa (3.75 mmHg)

EVAP VSV stuck open:

EVAP pressure when vacuum introduction is complete	Higher than reference pressure x 0.2

EVAP VSV stuck closed:

EVAP pressure change after EVAP canister purge valve is open	Less than 0.3 kPa (2.25 mmHg)

MONITOR RESULT

Refer to Monitor Result for detailed information (See page ES-25).

DTC	P0450	Evaporative Emission Control System Pressure Sensor / Switch

DTC	P0451	Evaporative Emission Control System Pressure Sensor Range / Performance

DTC	P0452	Evaporative Emission Control System Pressure Sensor / Switch Low Input

DTC	P0453	Evaporative Emission Control System Pressure Sensor / Switch High Input

DTC SUMMARY

DTCs	Monitoring Items	Malfunction Detection Conditions	Trouble Areas	Detection Timings	Detection Logic
P0450	Pressure sensor abnormal voltage fluctuation	Sensor output voltage rapidly fluctuates beyond upper and lower malfunction thresholds for 0.5 seconds.	• Pump module • ECM	• EVAP monitoring (ignition OFF) • Ignition ON	1 trip
P0451	Pressure sensor abnormal voltage fluctuation	Sensor output voltage fluctuates frequently in certain time period.	• Pump module • Connector/wire harness (Pump module - ECM) • ECM	• EVAP monitoring (ignition OFF) • Engine running	2 trip
P0451	Pressure sensor constant voltage	Sensor output voltage does not vary in certain time period.	• Pump module • Connector/wire harness (Pump module - ECM) • ECM	EVAP monitoring (ignition OFF)	2 trip
P0452	Pressure sensor voltage low	Sensor output voltage is less than 0.45 V for 0.5 seconds.	• Pump module • Connector/wire harness (Pump module - ECM) • ECM	• Ignition ON • EVAP monitoring (ignition OFF)	1 trip
P0453	Pressure sensor voltage high	Sensor output voltage is more than 4.9 V for 0.5 seconds.	• Pump module • Connector/wire harness (Pump module - ECM) • ECM	• Ignition ON • EVAP monitoring (ignition OFF)	1 trip

HINT:
The pressure sensor is built into the pump module.

DESCRIPTION

The circuit description can be found in the EVAP (Evaporative Emission) Inspection Procedure (See page ES-370).

MONITOR DESCRIPTION

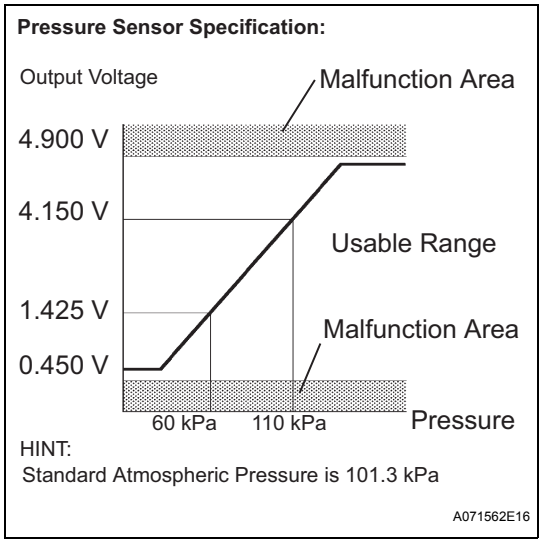

1. DTC P0450: Pressure sensor abnormal voltage fluctuation
   If the pressure sensor voltage output rapidly fluctuates between less than 0.45 V and more than 4.9 V, the ECM interprets this as an open or short circuit malfunction in the pressure sensor or its circuit, and stops the EVAP (Evaporative Emission) system monitor. The ECM then illuminates the MIL and sets the DTC (1 trip detection logic).
2. DTC P0451: Pressure sensor abnormal voltage fluctuation or being constant
   If the pressure sensor voltage output fluctuates rapidly for 10 seconds, the ECM stops the EVAP system monitor. The ECM interprets this as the pressure sensor voltage fluctuating, and stops the EVAP system monitor. The ECM then illuminates the MIL and sets the DTC.
   Alternatively, if the sensor voltage output does not change for 10 seconds, the ECM interprets this as the sensor being stuck, and stops the monitor. The ECM then illuminates the MIL and sets the DTC. (Both the malfunctions are detected by 2 trip detection logic.)
3. DTC P0452: Pressure sensor voltage low
   If the pressure sensor voltage output is below 0.45 V, the ECM interprets this as an open or short circuit malfunction in the pressure sensor or its circuit, and stops the EVAP system monitor. The ECM then illuminates the MIL and sets the DTC (1 trip detection logic).
4. DTC P0453: Pressure sensor voltage high
   If the pressure sensor voltage output is 4.9 V or more, the ECM interprets this as an open or short circuit malfunction in the pressure sensor or its circuit, and stops the EVAP system monitor. The ECM then illuminates the MIL and sets the DTC (1 trip detection logic).

OBD II MONITOR SPECIFICATIONS

MONITOR STRATEGY

Related DTCs	P0450: Evaporative emission control system pressure sensor/switch chattering P0451: Evaporative emission control system pressure sensor noise P0451: Evaporative emission control system pressure sensor stuck P0452: Evaporative emission control system pressure sensor/switch low input P0453: Evaporative emission control system pressure sensor/switch high input
Required Sensors / Components	Pump module
Frequency of Operation	Once pre driving cycle: P0451 sensor stuck Continuous: P0451 sensor noising, P0450, P0452 and P0453
Duration	Within 15 seconds: P0451 (Pressure sensor noise) Within 2 minutes: P0451 (Pressure sensor stuck) 0.5 seconds: P0450, P0452, P0453
MIL Operation	Immediate: P0450, P0452, P0453 2 driving cycles: P0451
Sequence of Operation	None

TYPICAL ENABLING CONDITIONS

All:

The monitor will run whenever these DTCs are not present	None

P0451 (Noise monitor):

Atmospheric pressure	70 to 110 kPa (525 to 825 mmHg)
Battery voltage	10.5 V or more
IAT	4.4 to 35°C (40 to 95°F)
EVAP pressure sensor malfunction (P0450, P0452, P0453)	Not detected
Either of the following conditions 1 or 2 is met	-
1. Engine condition	Running
2. Time after key-off	5 or 7 or 9.5 hours

P0451 (Stuck monitor):

Battery voltage	10.5 V or more
IAT	4.4 to 35°C (40 to 95°F)
EVAP pressure sensor malfunction (P0450, P0452, P0453)	Not detected
Atmospheric pressure	70 to 110 kPa (525 to 825 mmHg)
Time after key-off	5 or 7 or 9.5 hours

P0450, P0452 and P0453:

Ignition switch	ON
Battery voltage	ON
Starter	OFF

TYPICAL MALFUNCTION THRESHOLDS

(a) P0450: Pressure sensor chattering

EVAP pressure	Less than 42.11 kPa (316 mmHg), or more than 123.761 kPa (928 mmHg)

(b) P0451: Pressure sensor noise

Frequency that EVAP pressure change is 0.3 kPa (2.25 mmHg) or more	10 times or more in 10 seconds

(c) P0451: Pressure sensor stuck

EVAP pressure change during reference pressure	Less than 0.65 kPa (4.876 mmHg)

(d) P0452: Pressure sensor low voltage

EVAP pressure	Less than 42.11 kPa (316 mmHg)

(e) P0453: Pressure sensor high voltage

EVAP pressure	More than 123.761 kPa (928 mmHg)

WIRING DIAGRAM

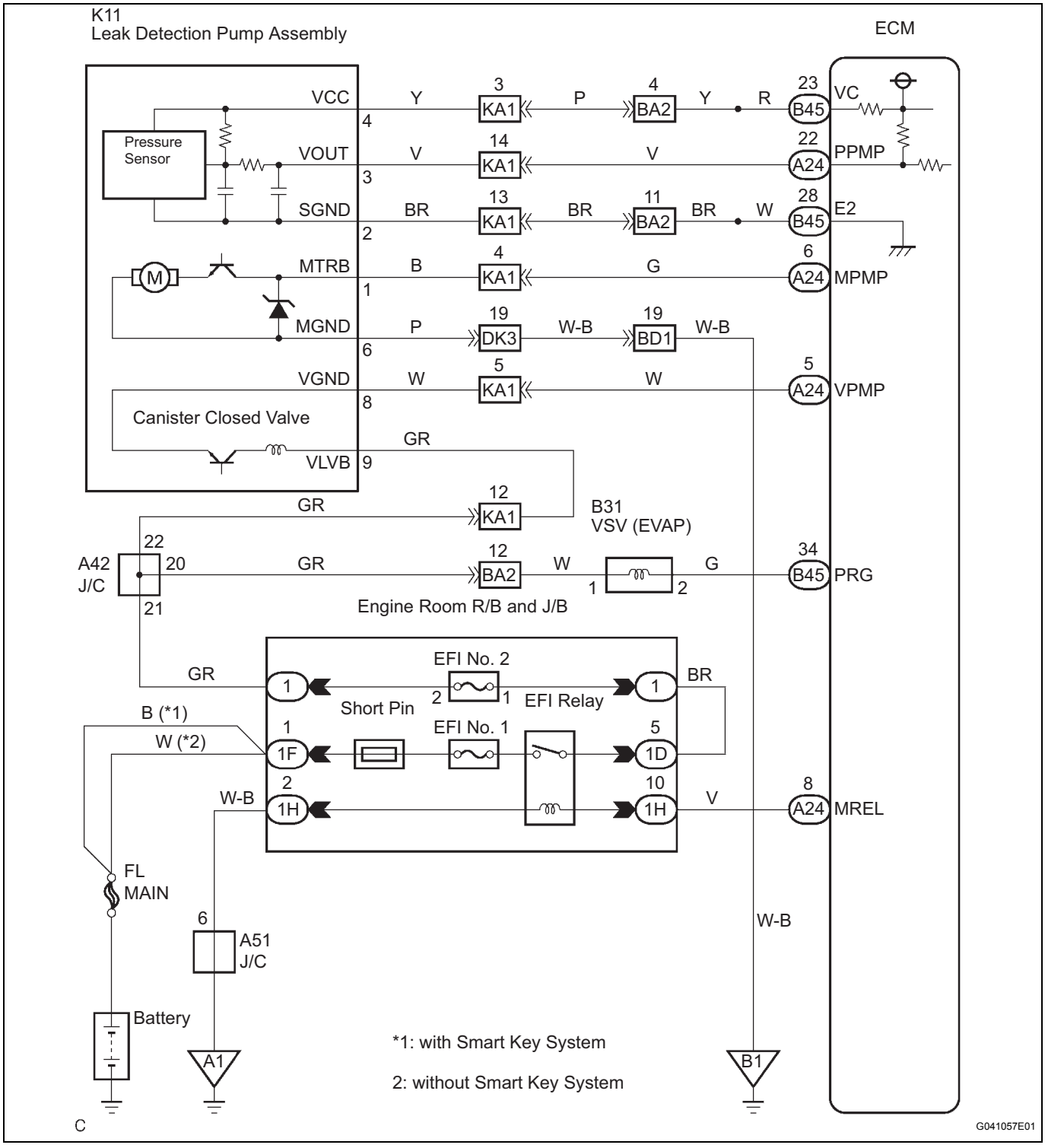

INSPECTION PROCEDURE

NOTICE:

- **When a vehicle is brought into the workshop, leave it as it is. Do not change the vehicle condition. For example, do not tighten the fuel tank cap.**
- **Do not disassemble the pump module.**
- **The intelligent tester is required to conduct the following diagnostic troubleshooting procedure.**

1	CONFIRM DTC AND EVAP PRESSURE

(a) Connect the intelligent tester to the DLC3.
(b) Turn the ignition switch on (IG) (do not start the engine).
(c) Turn the tester on.
(d) Select the following menu items: DIAGNOSIS / ENHANCED OBD II / DTC INFO / CURRENT CODES.
(e) Read DTCs.
(f) Select the following menu items: DIAGNOSIS / ENHANCED OBD II / DATA LIST / PRIMARY / VAPOR PRESSURE.
(g) Read the EVAP (Evaporative Emission) pressure displayed on the tester.

ES

Result

Display (DTC Output)	Test Results	Suspected Trouble Areas	Proceed to
P0451	-	Pressure sensor	C
P0452	Less than 45 kpa (338 mmHg)	• Wire harness/connector (ECM - pressure sensor) • Pressure sensor • Short in ECM circuit	A
P0453	More than 120 kPa (900 mmHg)	• Wire harness/connector (ECM - pressure sensor) • Pressure sensor • Open in ECM circuit	B

B → Go to step 4

C → GO TO EVAP SYSTEM

A

2	CHECK HARNESS AND CONNECTOR (PUMP MODULE - ECM)

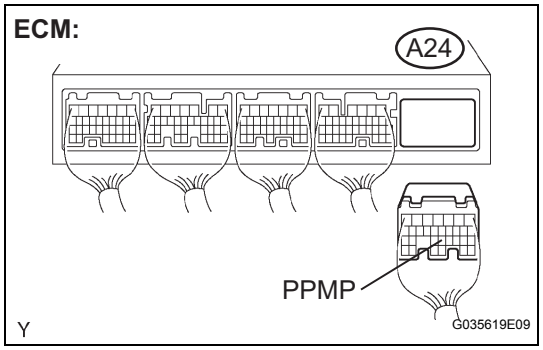

(a) Turn the ignition switch off.
(b) Disconnect the A24 ECM connector.
(c) Measure the resistance between PPMP terminal of the ECM connector and the body ground.

Result

Test Results	Suspected Trouble Areas	Proceed to
10 Ω or less	• Wire harness/connector (ECM - pressure sensor) • Short in pressure sensor circuit	A
10 Ω or more	• Wire harness/connector (ECM - pressure sensor) • Short in ECM circuit	B

(d) Reconnect the ECM connector.

B → Go to step 8

A

3	CHECK HARNESS AND CONNECTOR (PUMP MODULE - ECM)

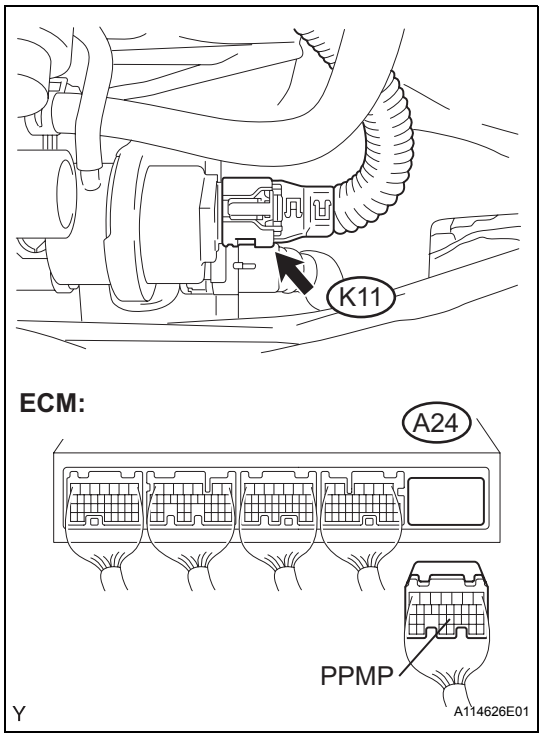

(a) Disconnect the K11 canister connector.
(b) Disconnect the A24 ECM connector.
(c) Measure the resistance between PPMP terminal of the ECM connector and the body ground.

Result

Test Results	Suspected Trouble Areas	Proceed to
10 kΩ or more	Short in pressure sensor circuit	A
10 kΩ or less	Short in wire harness/connector (ECM - pressure sensor)	B

(d) Reconnect the canister connector.
(e) Reconnect the ECM connector.

B → Go to step 6

A

4	REPLACE CHARCOAL CANISTER ASSEMBLY

(a) Replace charcoal canister assembly (See page EC-13).
(b) Connect the intelligent tester to the DLC3.
(c) Turn the ignition switch on (IG) and turn the tester on.
(d) Wait for at least 60 seconds.
(e) Select the following menu items on the tester:
DIAGNOSIS / ENHANCED OBD II / DTC INFO / PENDING CODES.
HINT:
If no pending DTC is displayed on the tester, the repair has been successfully completed.

NEXT

COMPLETED

5 CHECK HARNESS AND CONNECTOR (PUMP MODULE - ECM)

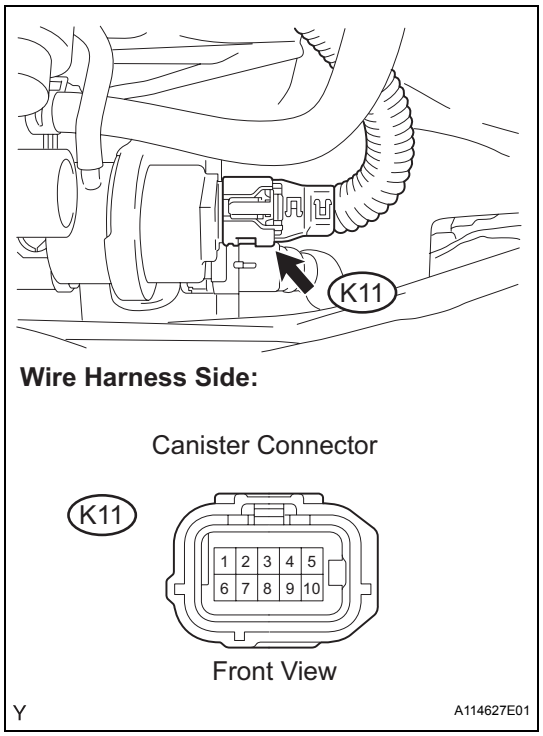

(a) Disconnect the K11 canister connector.
(b) Turn the ignition switch on (IG).
(c) Measure the voltage and resistance of the K11 canister connector.

Standard

Tester Connections	Specified Conditions
K11-4 - Body ground	Between 4.5 V and 5.5 V
K11-3 - Body ground	Between 4.5 V and 5.5 V
K11-2 - Body ground	100 Ω or less

Result

Test Results	Suspected Trouble Areas	Proceed to
Voltage and resistance is within standard ranges	Open in pressure sensor circuit	A
Voltage and resistance is outside standard ranges	Open in wire harness/connector (ECM - pressure sensor)	B

(d) Reconnect the canister connector.

B → Go to step 7

A

6 REPLACE CHARCOAL CANISTER ASSEMBLY

(a) Replace charcoal canister assembly (See page EC-13).
(b) Connect the intelligent tester to the DLC3.
(c) Turn the ignition switch on (IG) and turn the tester on.
(d) Wait for at least 60 seconds.
(e) Select the following menu items on the tester:
DIAGNOSIS / ENHANCED OBD II / DTC INFO / PENDING CODES.
HINT:
If no pending DTC is displayed on the tester, the repair has been successfully completed.

NEXT

COMPLETED

7	REPAIR OR REPLACE WIRE HARNESS OR CONNECTORS

(a) Repair or replace wire harness or connectors.
(b) Connect the intelligent tester to the DLC3.
(c) Turn the ignition switch on (IG) and turn the tester on.
(d) Wait for at least 60 seconds.
(e) Select the following menu items on the tester:
DIAGNOSIS / ENHANCED OBD II / DTC INFO / PENDING CODES.
HINT:
If no pending DTC is displayed on the tester, the repair has been successfully completed.

NEXT

COMPLETED

8	REPLACE ECM

(a) Replace the ECM (See page ES-446).
(b) Connect the intelligent tester to the DLC3.
(c) Turn the ignition switch on (IG) and turn the tester on.
(d) Wait for at least 60 seconds.
(e) Select the following menu items on the tester:
DIAGNOSIS / ENHANCED OBD II / DTC INFO / PENDING CODES.
HINT:
If no pending DTC is displayed on the tester, the repair has been successfully completed.

NEXT

COMPLETED

DTC	P0455	Evaporative Emission Control System Leak Detected (Gross Leak)

DTC	P0456	Evaporative Emission Control System Leak Detected (Very Small Leak)

DTC SUMMARY

DTCs	Monitoring Items	Malfunction Detection Conditions	Trouble Areas	Detection Timings	Detection Logic
P0455	EVAP gross leak	Vacuum pump creates negative pressure (vacuum) in EVAP system and EVAP system pressure is measured. 0.02 inch leak pressure standard is measured at start and end of leak check. If stabilized pressure is higher than [second 0.02 inch leak pressure standard x 0.2], ECM determines that EVAP system has large leakage.	• Fuel tank cap (loose) • Leakage from EVAP line (Canister - Fuel tank) • Leakage from EVAP line (Purge VSV - Canister) • Leakage from pump module • Leakage from fuel tank • Leakage from canister	While ignition switch OFF	2 trip
P0456	EVAP small leak	Vacuum pump creates negative pressure (vacuum) in EVAP system and EVAP system pressure measured. 0.02 inch leak pressure standard measured at start and end of leak check. If stabilized pressure is higher than second 0.02 inch leak pressure standard, ECM determines that EVAP system has small leakage.	Same above	While ignition switch OFF	2 trip

DESCRIPTION

The circuit description can be found in the EVAP (Evaporative Emission) System (See page ES-370).

INSPECTION PROCEDURE

Refer to the EVAP System (See page ES-373).

MONITOR DESCRIPTION

5 hours*1 after the ignition switch is turned off, the electric vacuum pump creates negative pressure (vacuum) in the EVAP (Evaporative Emission) system. The ECM monitors for leaks and actuator malfunctions based on the EVAP pressure.

HINT:

*1: If the engine coolant temperature is not below 35°C (95°F) 5 hours after the ignition switch is turned off, the monitor check starts 2 hours later. If it is still not below 35°C (95°F) 7 hours after the ignition switch is turned off, the monitor check starts 2.5 hours later.

Sequence	Operations	Descriptions	Duration
-	ECM activation	Activated by soak timer, 5 hours (7 or 9.5 hours) after ignition switch turned off.	-
A	Atmospheric pressure measurement	Vent valve turned OFF (vent) and EVAP system pressure measured by ECM in order to register atmospheric pressure. If pressure in EVAP system is not between 70 kPa and 110 kPa (525 mmHg and 825 mmHg), ECM cancels EVAP system monitor.	10 seconds

Sequence	Operations	Descriptions	Duration
B	First 0.02 inch leak pressure measurement	In order to determine 0.02 inch leak pressure standard, vacuum pump creates negative pressure (vacuum) through 0.02 inch orifice and then ECM checks if vacuum pump and vent valve operate normally.	60 seconds
C	EVAP system pressure measurement	Vent valve turned ON (closed) to shut EVAP system. Negative pressure (vacuum) is created in EVAP system, and EVAP system pressure then measured. Write down measured value as it will be used in leak check. If EVAP pressure does not stabilize within 15 minutes, ECM cancels EVAP system monitor.	15 minutes*2
D	Purge VSV monitor	Purge VSV is opened and then EVAP system pressure is measured by ECM. Large increase indicates normal.	10 seconds
E	Second 0.02 inch leak pressure measurement	After second 0.02 inch leak pressure measurement, leak check is performed by comparing first and second 0.02 inch leak pressure standards. If stabilized system pressure is higher than second 0.02 inch leak pressure standard, ECM determines that EVAP system leaking.	60 seconds
F	Final check	Atmospheric pressure is measured and then monitoring result is recorded by ECM.	-

*2: If there is only a small amount of fuel in the fuel tank, stabilizing the EVAP pressure takes longer than usual.

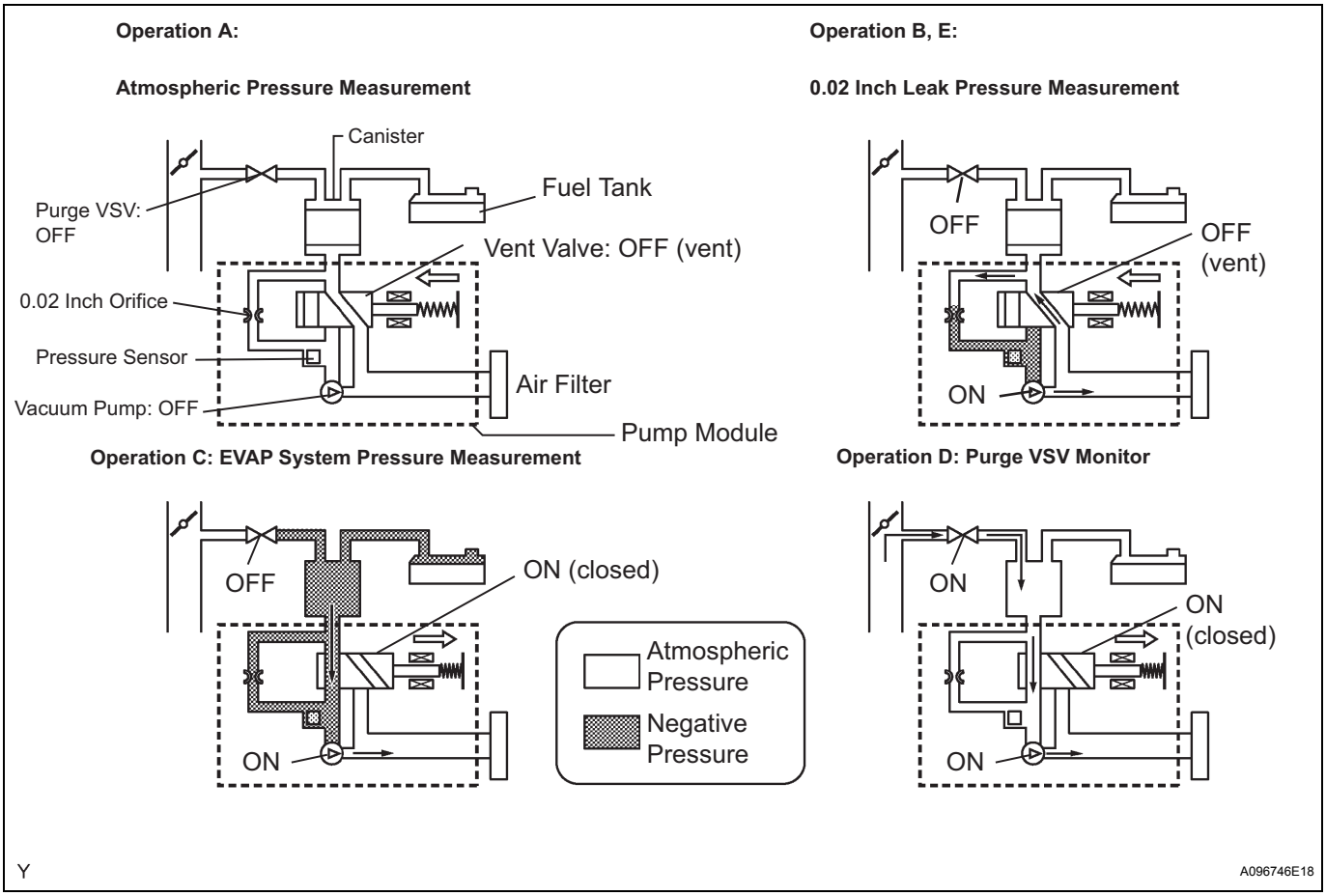

1. P0455: EVAP (Evaporative Emission) gross leak
   In operation C, the vacuum pump creates negative pressure (vacuum) in the EVAP system and the EVAP system pressure is measured. If the stabilized system pressure is higher than [second 0.02 inch leak pressure standard x 0.2] (near atmospheric pressure), the ECM determines that the EVAP system has a large leak, illuminates the MIL and sets the DTC (2 trip detection logic).

2. P0456: EVAP very small leak
In operation C, the vacuum pump creates negative pressure (vacuum) in the EVAP system and the EVAP system pressure is measured. If the stabilized system pressure is higher than second 0.02 inch leak pressure standard, the ECM determines that the EVAP system has a small leak, illuminates the MIL and sets the DTC (2 trip detection logic).

EVAP Pressure when EVAP System Leaks:

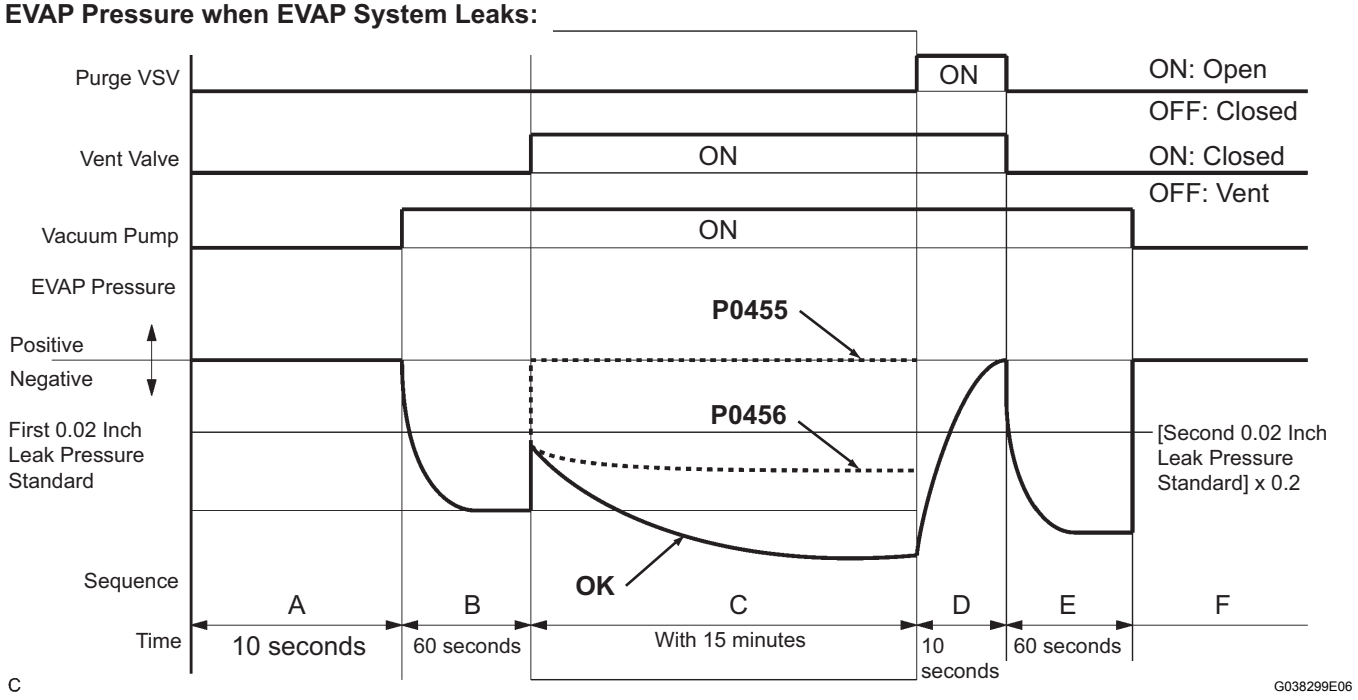

OBD II MONITOR SPECIFICATIONS

MONITOR STRATEGY

Related DTCs	P0455: Gross leak detected P0456: Very small leak (0.020 inch hole) detected
Required Sensors / Components	Purge VSV and pump module
Frequency of Operation	Once per driving cycle
Duration	Within 15 minutes
MIL Operation	2 driving cycles
Sequence of Operation	None

TYPICAL ENABLING CONDITIONS

The monitor will run whenever these DTCs are not present	None
Key-off monitor is run when all of the following conditions met	-
Atmospheric pressure	70 to 110 kPa (525 to 825 mmHg)
Battery voltage	10.5 V or more
Vehicle speed	2.5 mph (4 km/h) or less
Ignition switch	OFF
Time after key-off	5 or 7 or 9.5 hours
EVAP pressure sensor malfunction (P0450, P0452, P0453)	Not detected
EVAP canister purge valve	Not operated by scan tool

EVAP canister vent valve	Not operated by scan tool
EVAP leak detection pump	Not operated by scan tool
Both of the following conditions 1 and 2 set before key-off	-
1. Duration that vehicle has been driven	5 minutes or more
2. EVAP purge operation	Performed
ECT	4.4 to 35°C (40 to 95°F)
IAT	4.4 to 35°C (40 to 95°F)

Key-off monitor sequence 1 to 8

1. Atmospheric pressure measurement

Next sequence is run if the following condition is met	-
Atmospheric pressure change	Less than 0.3 kPa (2.25 mmHg) in 1 second

2. First reference pressure measurement

Next sequence is run if the following conditions are met	Condition 1, 2 and 3
1. EVAP pressure just after reference pressure measurement start	-1 kPa (-7.5 mmHg) or less
2. Reference pressure	-4.85 to -1.057 kPa (-36.384 to -7.929 mmHg)
3. Reference pressure	Saturated

3. EVAP canister vent valve close stuck check

Next sequence is run if the following condition is met	-
EVAP pressure change after vent valve is ON	0.3 kPa (2.25 mmHg) or more

4. Vacuum introduction

Next sequence is run if the following condition is met	-
EVAP pressure	Saturated within 15 minutes

5. EVAP canister purge valve close stuck check

Next sequence is run if the following condition is met	-
EVAP pressure change after purge valve is open	0.3 kPa (2.25 mmHg) or more

6. Second reference pressure measurement

Next sequence is run if the following conditions are met	Condition 1, 2, 3 and 4
1. EVAP pressure just after reference pressure	-1 kPa (-7.5 mmHg) or less
2. Reference pressure	-4.85 to -1.057 kPa (-36.384 to -7.929 mmHg)
3. Reference pressure	Saturated
4. Difference between first reference pressure and second reference pressure	Less than 0.7 kPa (5.25 mmHg)

7. Leak check

Next sequence is run if the following condition is met	-
EVAP pressure when vacuum introduction is complete	Lower than second reference pressure

8. Atmospheric pressure measurement

EVAP monitor is complete if the following condition is met	-
Atmospheric pressure difference between sequence 1 and 8	Within 0.3 kPa (2.25 mmHg)

TYPICAL MALFUNCTION THRESHOLDS

P0455: EVAP gross leak

EVAP pressure when vacuum introduction is complete	Between reference pressure and reference pressure x 0.2

P0456: EVAP 0.02 inch leak

EVAP pressure when vacuum introduction is complete	Higher than reference pressure x 0.2

MONITOR RESULT

Refer to Monitor Result for detailed information (See page ES-25).

DTC	P0500	Vehicle Speed Sensor "A"

DESCRIPTION

Vehicles, which are equipped with ABS (Anti-lock Brake System), detect the vehicle speed using the skid control ECU and wheel speed sensor. The wheel speed sensor monitors the wheel rotation speed and sends a signal to the skid control ECU. The skid control ECU converts the wheel speed signal into a 4-pulse signal and transmits it to the ECM via the combination meter. The ECM determines the vehicle speed based on the frequency of the pulse signal.

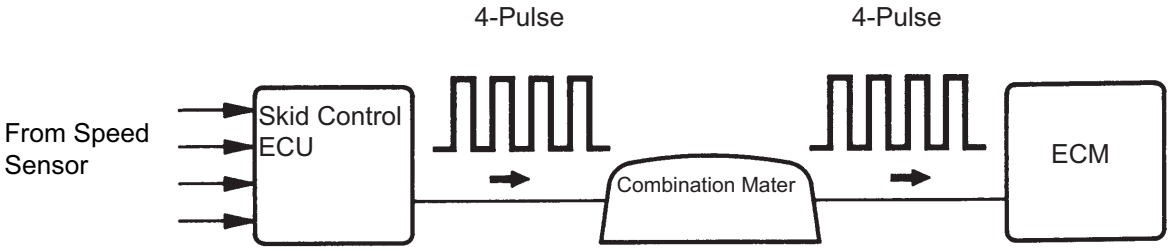

A079413E17

DTC No.	DTC Detection Conditions	Trouble Areas
P0500	Satisfying all of the following conditions, 2 sec. (Intake air temperature: -10°C or more) or 8 sec. (Intake air temperature: less than -10°C) elapsed. (a) After 2 sec. (the engine coolant temperature: 20°C or more) or 30 sec. (the engine coolant temperature: less than 20°C) with the park/neutral position switch set to P, N position. (b) No abnormality of the throttle position sensor is detected. (c) After 0.5 sec. or more with the ignition switch turned ON. (d) No vehicle speed is signal to ECM. (e) The engine rpm is equal to the speed sensor rpm or more when the throttle opening angle is as shown below. 1. The throttle opening angle is less than 13° and the engine rpm is 2,350 or more. 2. The throttle opening angle is less than 21° and the engine rpm is 2,680 or more. 3. The throttle opening angle is less than 30° and the engine rpm is 2,835 or more. 4. The throttle opening angle is less than 30° and the engine rpm is 3,240 or more.	• Open or short in speed sensor circuit • Speed sensor • Combination meter • ECM • Skid control ECU

MONITOR DESCRIPTION

The ECM assumes that the vehicle is being driven when the engine speed is more than approx. 2,350 rpm over 30 seconds have passed since the park/neutral position switch was turned OFF. If there is no signal from the vehicle speed sensor with these conditions satisfied, the ECM concludes that the vehicle speed sensor is malfunctioning. The ECM will turn on the MIL and a DTC is set.

MONITOR STRATEGY

Related DTCs	P0500: Vehicle speed sensor "A" pulse input error
Required Sensors / Components (Main)	Vehicle Speed Sensor (VSS), Combination meter and Skid control ECU
Required Sensors / Components (Related)	Park/neutral Position (PNP) switch, Engine Coolant Temperature (ECT) sensor, Crankshaft Position (CKP) sensor and Mass Air Flow (MAF) meter
Frequency of Operation	Continuous
Duration	2 seconds
MIL Operation	Immediate
Sequence of Operation	None

TYPICAL ENABLING CONDITIONS

ES

The monitor will run whenever these DTCs are not present	P0120, P0121, P0122, P0123, P0220, P0222, P0223, P2135 (TP)
Time after ignition switch OFF to ON	3 seconds or more
Engine	Running
Transmission counter gear speed	300 rpm or more
Battery voltage	8 V or more
Ignition switch	ON
Starter	OFF
Either of the following conditions is met	Condition 1 or 2
1. Both of the following conditions are met	Condition (a) or (b)
(a) ECT and ECT sensor	ECT is 20°C (68°F) or more and ECT sensor does not malfunction (P0115 or P0116)
(b) Time after PNP switch ON to OFF	10 seconds or more
2. Both of the following conditions are met	Condition (a) and (b)
(a) ECT and ECT sensor	ECT is less than 20°C (68°F) or ECT sensor malfunction (P0115 or P0116)
(b) Time after PNP switch ON to OFF	30 seconds or more

TYPICAL MALFUNCTION THRESHOLDS

Vehicle speed sensor signal	No signal

WIRING DIAGRAM

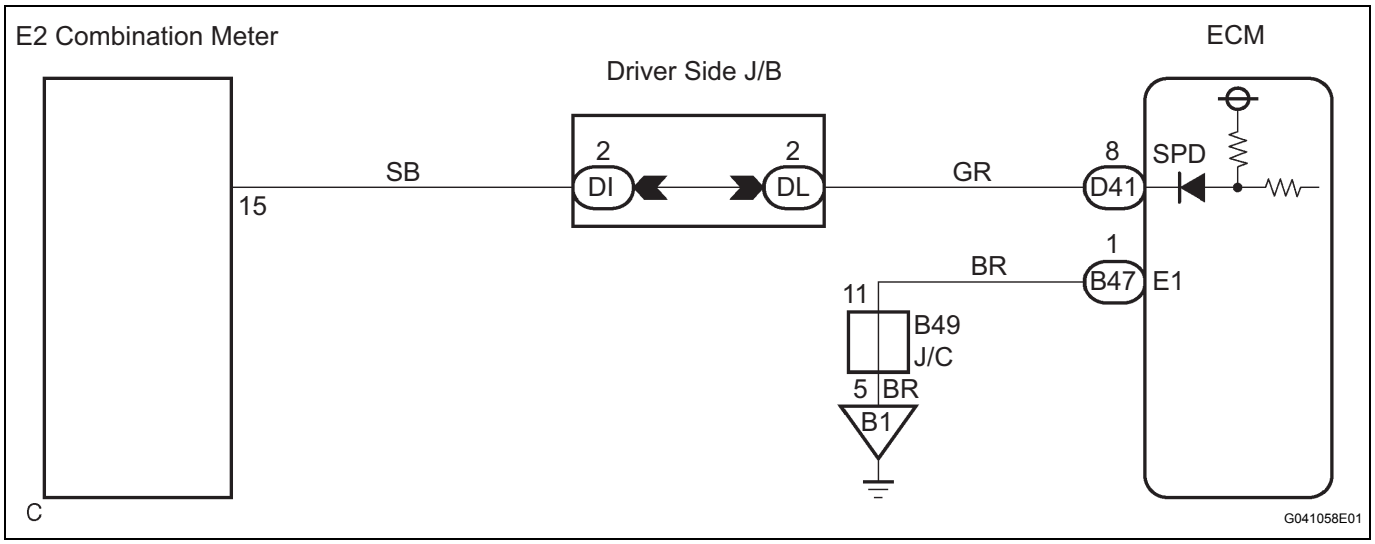

INSPECTION PROCEDURE

HINT:
Read freeze frame data using the intelligent tester. The ECM records vehicle and driving condition information as freeze frame data the moment a DTC is stored. When troubleshooting, freeze frame data can be helpful in determining whether the vehicle was running or stopped, whether the engine was warmed up or not, whether the air/fuel ratio was lean or rich, as well as other data recorded at the time of a malfunction.

1 CHECK OPERATION OF SPEEDOMETER

(a) Drive the vehicle and check if the operation of the speedometer in the combination meter is normal.
OK:
Actual vehicle speed and the speed indicated on the speedometer are the same.
HINT:
The vehicle speed sensor is operating normally if the speedometer reading is normal.

NG → **CHECK SPEEDOMETER CIRCUIT**

OK

2 INSPECT ECM (SPD VOLTAGE)

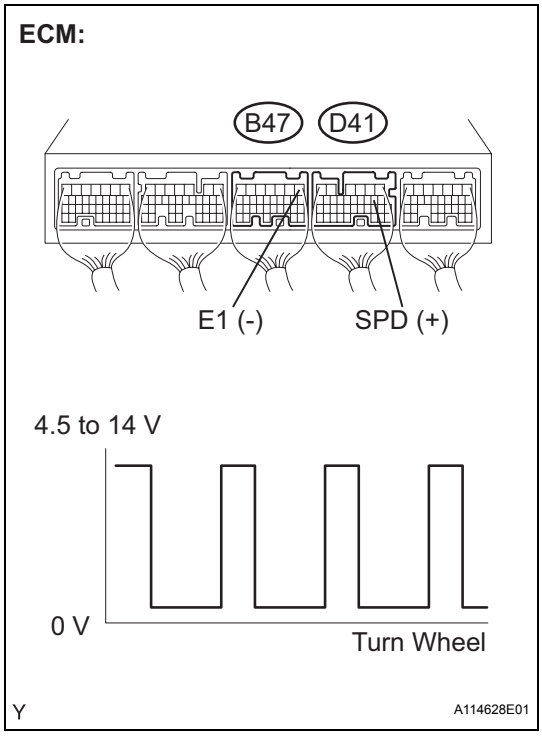

(a) Shift the shift lever to the N position.
(b) Jack up the vehicle.
(c) Turn the ignition switch on (IG).
(d) Check the voltage between the terminals of the B47 and D41 ECM connectors as the wheel is turned slowly.
OK

Tester Connections	Specified Conditions
SPD (D41-8) - E1 (B47-1)	Voltage generated intermittently

HINT:
The output voltage should fluctuate up and down similarly to the diagram on the left when the wheel is turned slowly.

NG → **REPAIR OR REPLACE HARNESS OR CONNECTOR**

OK

REPLACE ECM

DTC	P0504	Brake Switch "A" / "B" Correlation

DESCRIPTION

The stop light switch is a duplex system that transmits two signals: STP and ST1-. These two signals are used by the ECM to monitor whether or not the brake system is working properly. If the signals, which indicate the brake pedal is being depressed or released, are detected simultaneously, the ECM interprets this as a malfunction in the stop light switch and sets the DTC.

HINT:

The normal conditions are as shown in the table below. The signals can be read using the intelligent tester.

Signals	Brake Pedal Released	In Transition	Brake Pedal Depressed
STP	OFF	ON	ON
ST1-	ON	ON	OFF

ES

DTC No.	DTC Detection Conditions	Trouble Areas
P0504	Conditions (a), (b) and (c) continue for 0.5 seconds or more (1 trip detection logic): (a) Ignition switch on (IG) (b) Brake pedal released (c) STP signal OFF when ST1- signal OFF	• Short in stop light switch signal circuit • STOP fuse • Stop light switch • ECM

WIRING DIAGRAM

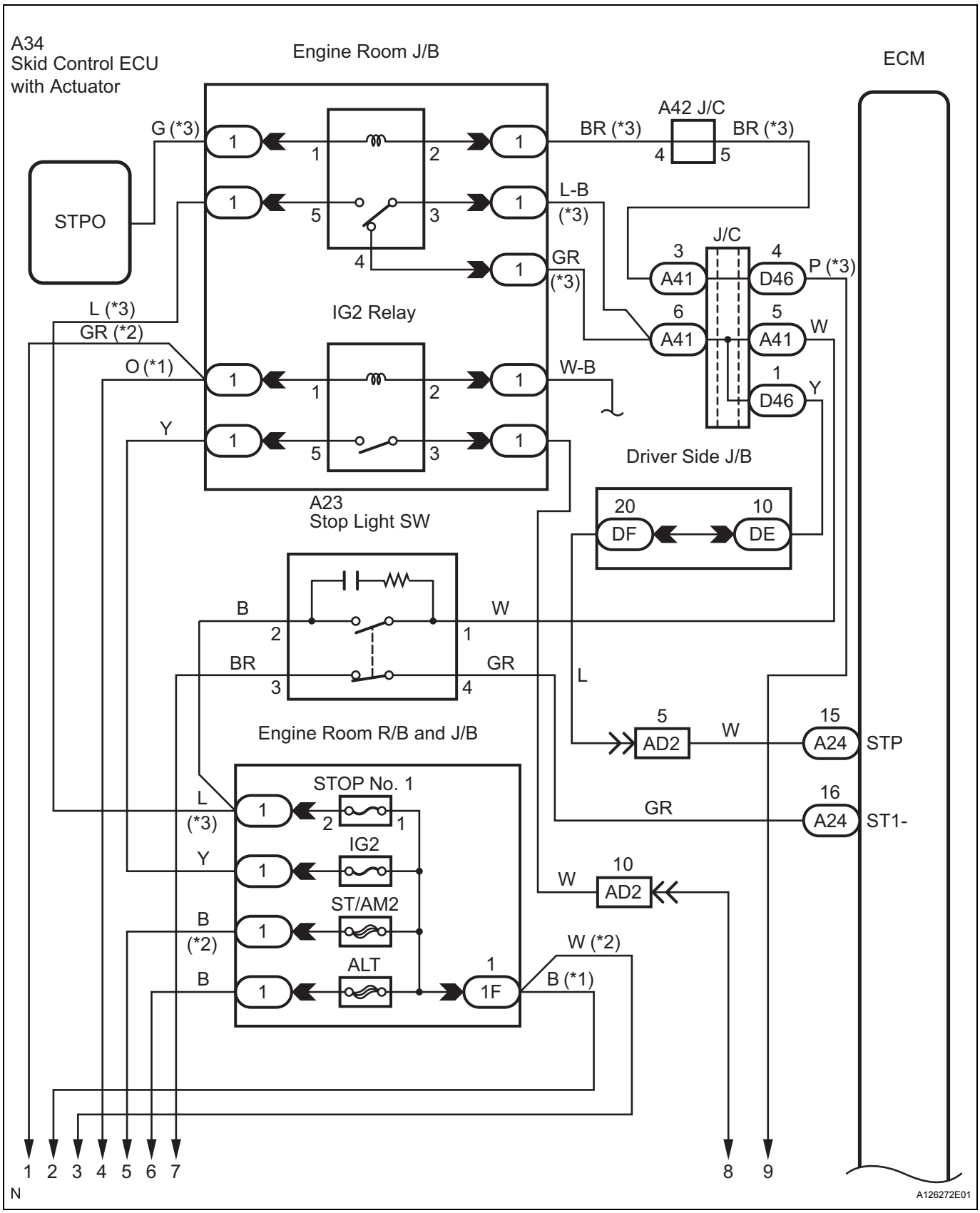

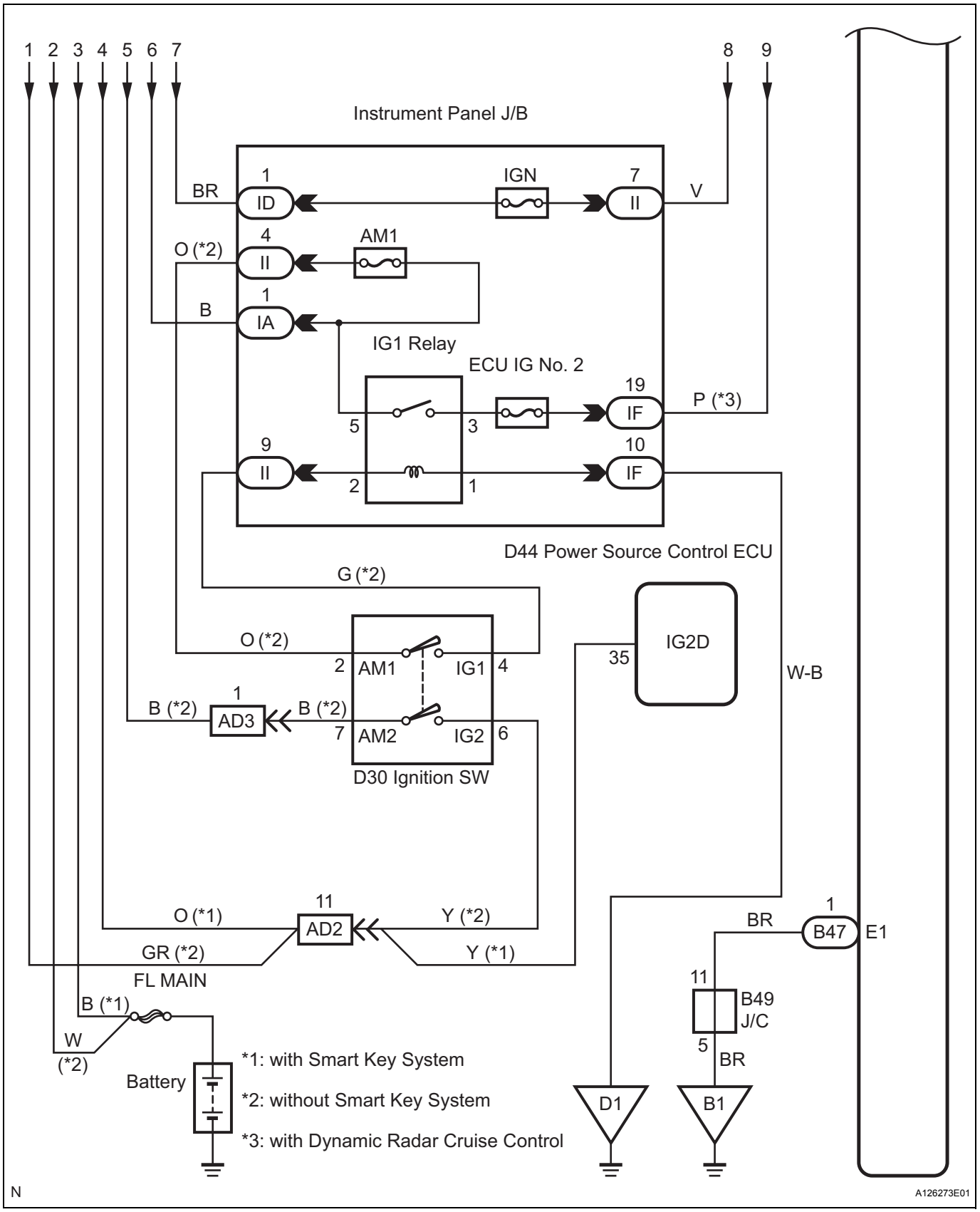
1 2 3 4 5 6 7
8 9
Instrument Panel J/B
BR
1
ID
IGN
7
II
V
O (*2)
4
II
AM1
B
1
IA
IG1 Relay
ECU IG No. 2
19
IF
P (*3)
5
3
9
II
10
IF
2
1
D44 Power Source Control ECU
G (*2)
O (*2)
2
AM1
IG1
4
35
IG2D
W-B
B (*2)
1
AD3
B (*2)
7
AM2
IG2
6
D30 Ignition SW
11
AD2
O (*1)
Y (*2)
GR (*2)
Y (*1)
FL MAIN
B (*1)
W
(*2)
Battery
BR
1
B47
E1
11
B49
J/C
5
BR
D1
B1
*1: with Smart Key System
*2: without Smart Key System
*3: with Dynamic Radar Cruise Control
N
A126273E01

INSPECTION PROCEDURE

HINT:
Read freeze frame data using the intelligent tester. The ECM records vehicle and driving condition information as freeze frame data the moment a DTC is stored. When troubleshooting, freeze frame data can be helpful in determining whether the vehicle was running or stopped, whether the engine was warmed up or not, whether the air/fuel ratio was lean or rich, as well as other data recorded at the time of a malfunction.

1	CHECK OPERATION OF STOP LIGHT

(a) Check whether the stop lights turn on and off normally when the brake pedal is depressed and released.
OK:
Stop lights turn on when brake pedal is depressed.

NG → **REPAIR OR REPLACE STOP LIGHT SWITCH CIRCUIT**

OK

2	INSPECT STOP LIGHT SWITCH ASSEMBLY

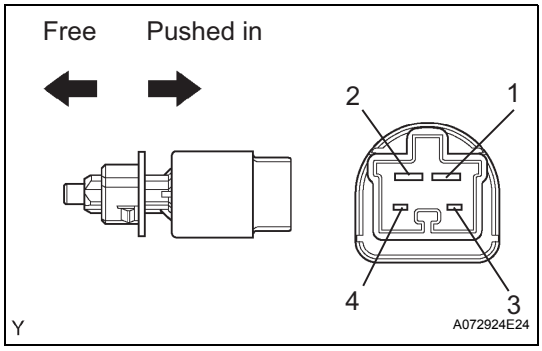

(a) Remove the stop light switch assembly.
(b) Measure the resistance.
Standard resistance

Switch Positions	Tester Connections	Specified Conditions
Switch pin free	1 - 2	Below 1 Ω
Switch pin free	3 - 4	10 kΩ or higher
Switch pin pushed in	1 - 2	10 kΩ or higher
Switch pin pushed in	3 - 4	Below 1 Ω

(c) Reinstall the stop light switch assembly.

NG → **REPLACE STOP LIGHT SWITCH ASSEMBLY**

OK

3 READ VALUE OF INTELLIGENT TESTER (STP SIGNAL AND ST1 - VOLTAGE)

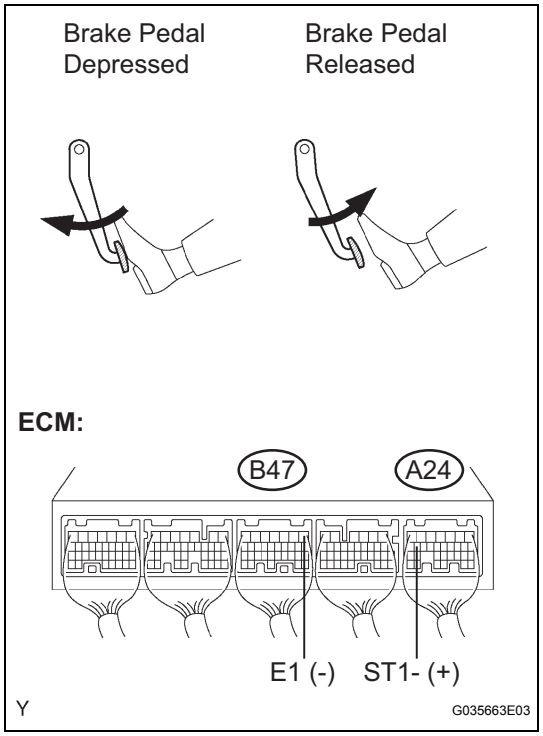

(a) Connect the intelligent tester to the DLC3.
(b) Turn the ignition switch on (IG) and turn the tester on.
(c) Select the following menu items: DIAGNOSIS / ENHANCED OBD II / DATA LIST / PRIMARY / STOP LIGHT SW.
(d) Check the STP signal when the brake pedal is depressed and released.

Standard

Brake Pedal Operations	Specified Conditions
Depressed	STP signal ON
Released	STP signal OFF

(e) Measure the voltage between the terminals of the A24 and B47 ECM connectors.

Standard voltage

Tester Connections	Brake Pedal Operations	Specified Conditions
ST1- (A24-16) - E1 (B47-1)	Depressed	Below 1.5 V
ST1- (A24-16) - E1 (B47-1)	Released	7.5 to 14 V

OK → **CHECK FOR INTERMITTENT PROBLEMS**

NG

4 CHECK HARNESS AND CONNECTOR (STOP LIGHT SWITCH - ECM)

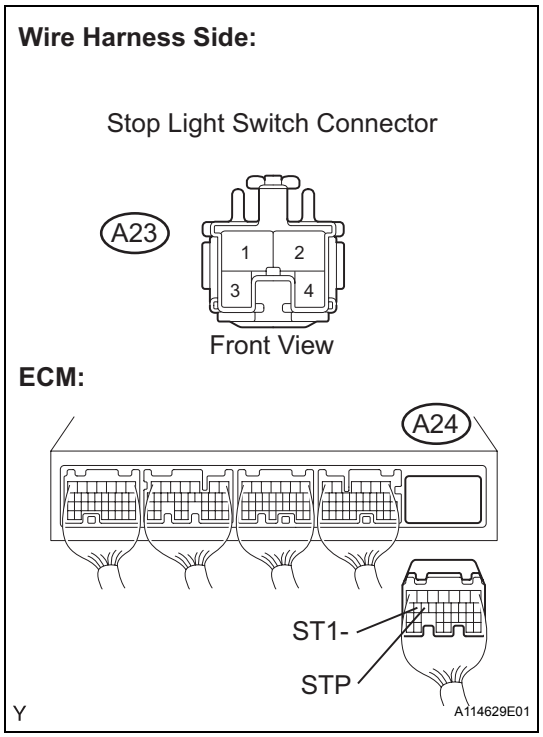

(a) Disconnect the A23 stop light switch connector.
(b) Disconnect the A24 ECM connector.
(c) Measure the resistance.

Standard resistance (Check for open)

Tester Connections	Specified Conditions
Stop light switch (A23-1) - STP (A24-15)	Below 1 Ω
Stop light switch (A23-4) - ST1- (A24-16)	Below 1 Ω

Standard resistance (Check for short)

Tester Connections	Specified Conditions
Stop light switch (A23-1) or STP (A24-15) - Body ground	10 kΩ or higher
Stop light switch (A23-4) or ST1- (A24-16) - Body ground	10 kΩ or higher

(d) Reconnect the stop light switch connector.
(e) Reconnect the ECM connector.

NG → **REPAIR OR REPLACE HARNESS OR CONNECTOR**

OK

REPLACE ECM

DTC	P0505	Idle Control System Malfunction

DESCRIPTION

The idling speed is controlled by the ETCS (Electronic Throttle Control System). The ETCS is comprised of: 1) the one valve type throttle body; 2) the throttle actuator, which operates the throttle valve; 3) the Throttle Position (TP) sensor, which detects the opening angle of the throttle valve; 4) the Accelerator Pedal Position (APP) sensor, which detects the accelerator pedal position; and 5) the ECM, which controls the ETCS.

Based on the target idling speed, the ECM controls the throttle actuator to provide the proper throttle valve opening angle.

DTC No.	DTC Detection Conditions	Trouble Areas
P0505	Idling speed continues to vary greatly from target idling speed (2 trip detection logic)	• ETCS • Air induction system • PCV hose connection • ECM

ES

MONITOR DESCRIPTION

The ECM monitors the idling speed and idling air flow volume to conduct Idle Speed Control (ISC). The ECM determines that the ISC system is malfunctioning if the following conditions apply:

- The learned idling air flow volume remains at the maximum or minimum volume 5 times or more during a drive cycle.
- While driving at 6 mph (10 km/h) or more, the actual engine idling speed varies from the target idling speed by between 100 rpm and 200 rpm, 5 times or more during a drive cycle.

Example:
If the actual idling speed varies from the target idling speed by more than 200 rpm* 5 times during a drive cycle, the ECM illuminates the MIL and sets the DTC.
*: Threshold idling speed varies with engine load.

Example:

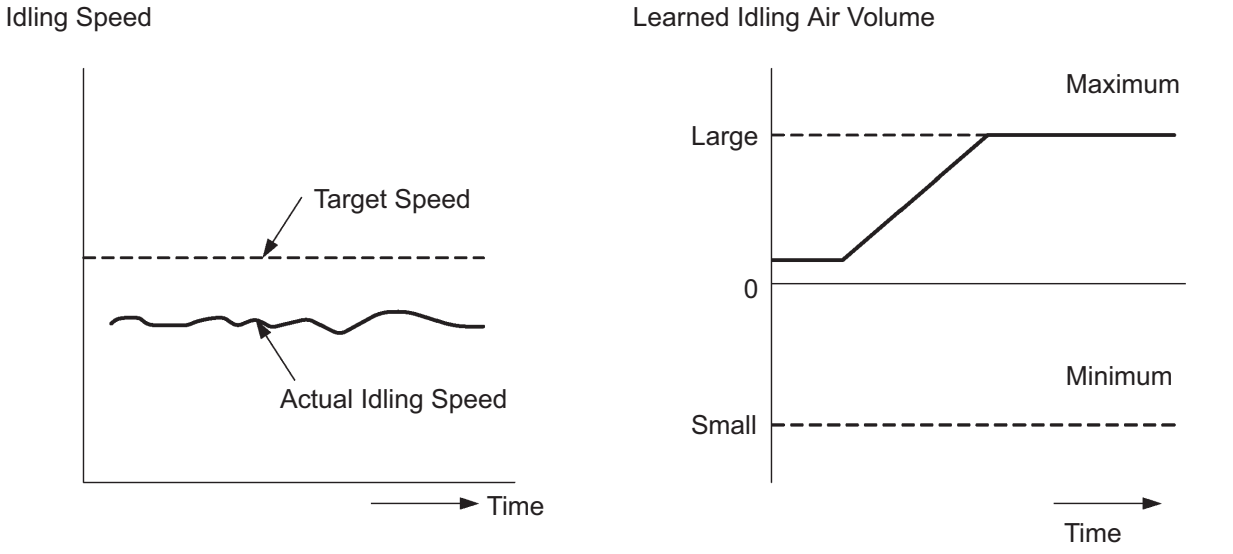

Y A082389E22

MONITOR STRATEGY

Related DTCs	P0505: ISC Function
Required Sensors / Components (Main)	ETCS
Required Sensors / Components (Related)	Crankshaft position sensor, Engine coolant temperature sensor, and Vehicle speed sensor
Frequency of Operation	Continuous
Duration	10 minutes
MIL Operation	2 driving cycles
Sequence of Operation	None

TYPICAL ENABLING CONDITIONS

Functional check:

The monitor will run whenever these DTCs are not present	None
Engine	Running

Range check:

The monitor will run whenever these DTCs are not present	None
Time after first missing voltage change	10 seconds or more
Output signal duty	10% or more and 90% or less

Battery voltage	10 V or more

TYPICAL MALFUNCTION THRESHOLDS

Functional check:

Either of following conditions is met	Condition 1 or 2
1. Frequency that both of following conditions (a) and (b) met	5 times or more
(a) Engine RPM - target engine RPM	Below -100 rpm, or 150 rpm or more
(b) Vehicle condition	Stop after vehicle was driven by 6.25 mph (10.06 km/h) or more
2. Frequency that both of following conditions (a) and (b) met	Once
(a) Engine RPM - target engine RPM	Below -100 rpm, or 150 rpm or more
(b) IAC flow rate learning valve	1.3 L/sec. or less, or 8.5 L/sec. or more

ES

Range check:

Number of missing output voltage change	2,000 times or more

INSPECTION PROCEDURE

HINT:

- The following conditions may also cause DTC P0505 to be set:
  (a) The floor carpet overlapping slightly onto the accelerator pedal, causing the accelerator pedal to be slightly depressed and therefore the throttle valve position to be slightly open.
  (b) The accelerator pedal being not fully released.
- Read freeze frame data using the intelligent tester. The ECM records vehicle and driving condition information as freeze frame data the moment a DTC is stored. When troubleshooting, freeze frame data can be helpful in determining whether the vehicle was running or stopped, whether the engine was warmed up or not, whether the air/fuel ratio was lean or rich, as well as other data recorded at the time of a malfunction.

1	CHECK ANY OTHER DTCS OUTPUT (IN ADDITION TO DTC P0505)

(a) Connect the intelligent tester to the DLC3.
(b) Turn the ignition switch on (IG).
(c) Turn the tester on.
(d) Select the following menu items: DIAGNOSIS / ENHANCED OBD II / DTC INFO / CURRENT CODES.
(e) Read DTCs.

Result

Display (DTC Output)	Proceed to
P0505	A
P0505 and other DTCs	B

HINT:
If any DTCs other than P0505 are output, troubleshoot those DTCs first.

B → GO TO DTC CHART

A

2	CHECK PCV HOSE CONNECTIONS

OK:
PCV hose is connected correctly and is not damaged.

NG → **REPAIR OR REPLACE PCV HOSE**

OK

3	CHECK AIR INDUCTION SYSTEM

ES

(a) Check the air induction system for vacuum leakage.
OK:
No leakage from air induction system.

NG → **REPAIR OR REPLACE AIR INDUCTION SYSTEM**

OK

4	CHECK THROTTLE VALVE

(a) Check the throttle valve condition.
OK:
Normal

NG → **REPLACE THROTTLE WITH MOTOR BODY ASSEMBLY**

OK

REPLACE ECM

DTC	P0560	System Voltage

MONITOR DESCRIPTION

The battery supplies electricity to the ECM even when the ignition switch is off. This power allows the ECM to store data such as DTC history, freeze frame data and fuel trim values. If the battery voltage falls below a minimum level, these memories are cleared and the ECM determines that there is a malfunction in the power supply circuit. When the engine is next started, the ECM illuminates the MIL and sets the DTC.

DTC No.	DTC Detection Conditions	Trouble Areas
P0560	Open in ECM back up power source circuit (1 trip detection logic)	• Open in back up power source circuit • EFI No. 1 fuse • ECM

HINT:
If DTC P0560 is set, the ECM does not store other DTCs.

MONITOR STRATEGY

Related DTCs	P0560: ECM system voltage
Required Sensors / Components (Main)	ECM
Required Sensors / Components (Related)	-
Frequency of Operation	Continuous
Duration	3 seconds
MIL Operation	Immediate (MIL illuminated after next engine start)
Sequence of Operation	None

TYPICAL ENABLING CONDITIONS

The monitor will run whenever these DTCs are not present	None
Stand-by RAM	Initialized

TYPICAL MALFUNCTION THRESHOLDS

ECM power source	Less than 3.5 V

WIRING DIAGRAM

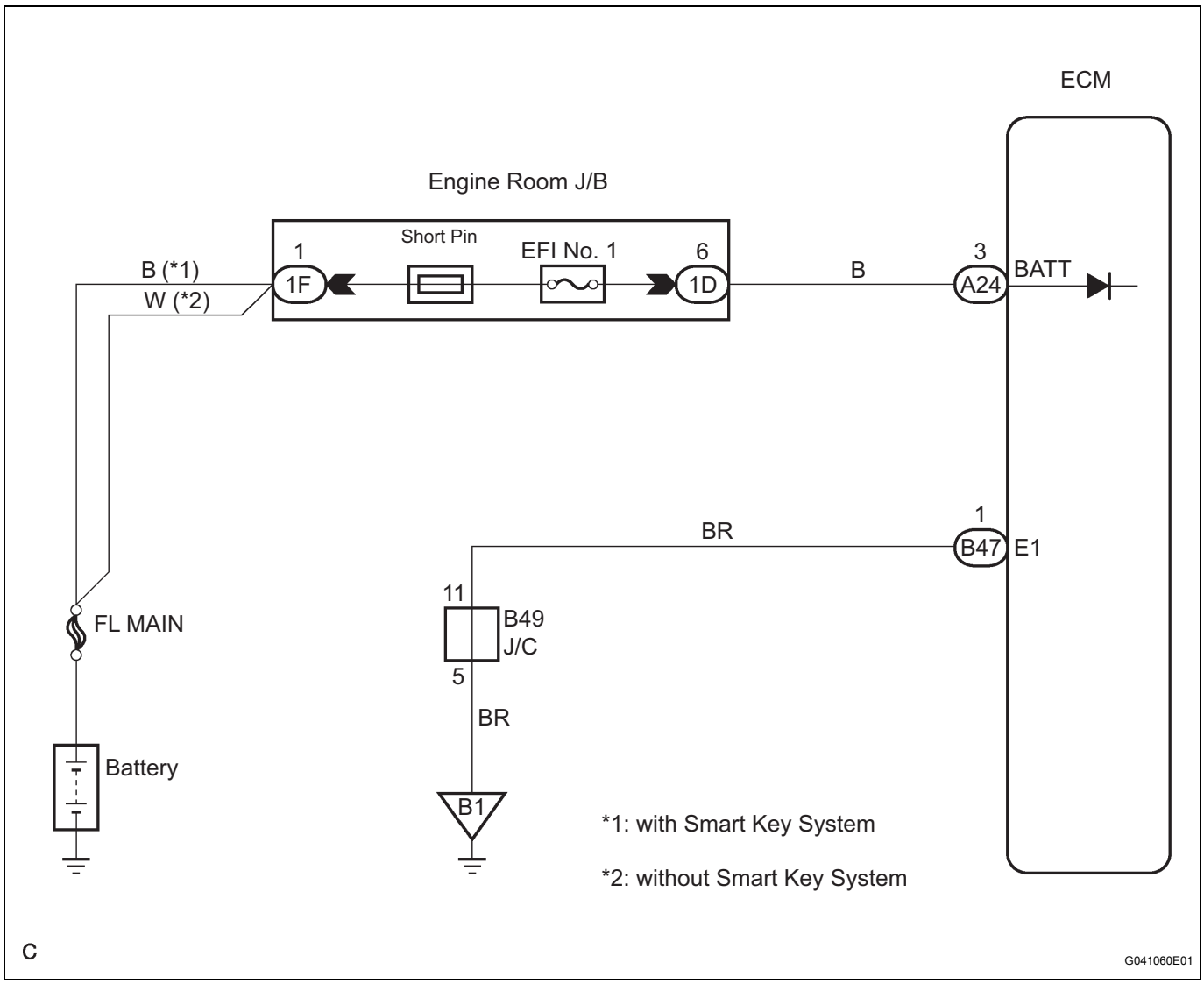

ES

INSPECTION PROCEDURE

HINT:

Read freeze frame data using the intelligent tester. The ECM records vehicle and driving condition information as freeze frame data the moment a DTC is stored. When troubleshooting, freeze frame data can be helpful in determining whether the vehicle was running or stopped, whether the engine was warmed up or not, whether the air/fuel ratio was lean or rich, as well as other data recorded at the time of a malfunction.

1	CHECK FUSE (EFI FUSE)

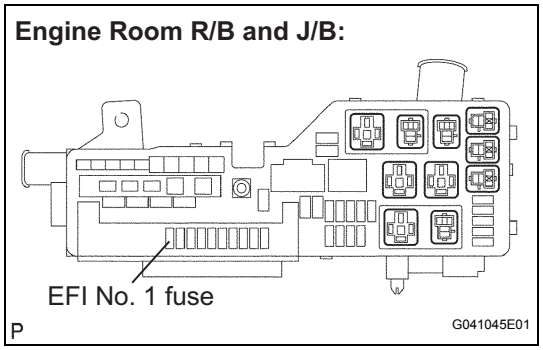

(a) Remove the EFI No.1 fuse from the engine room R/B and J/B.
(b) Measure the resistance.
Standard resistance:
Below 1 Ω
(c) Reinstall the EFI No. 1 fuse.

NG → **CHECK FOR SHORT IN ALL HARNESS AND COMPONENTS CONNECTED TO FUSE, AND REPLACE FUSE**

OK

2	INSPECT ECM (BATT VOLTAGE)

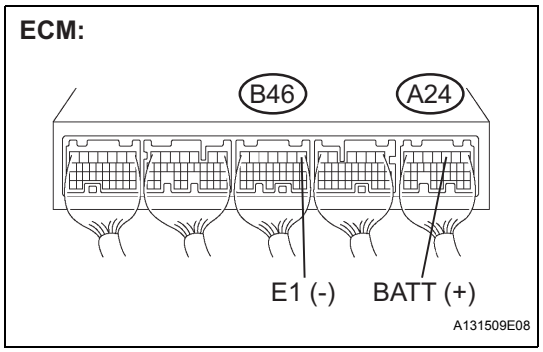

(a) Measure the voltage between the terminals of the A24 and B47 ECM connectors.
Standard voltage

Tester Connections	Specified Conditions
BATT (A24-3) - E1 (B47-1)	9 to 14 V

NG → **Go to step 3**

OK

REPLACE ECM

ES

3	CHECK HARNESS AND CONNECTOR (ECM - EFI FUSE, EFI FUSE - BATTERY)

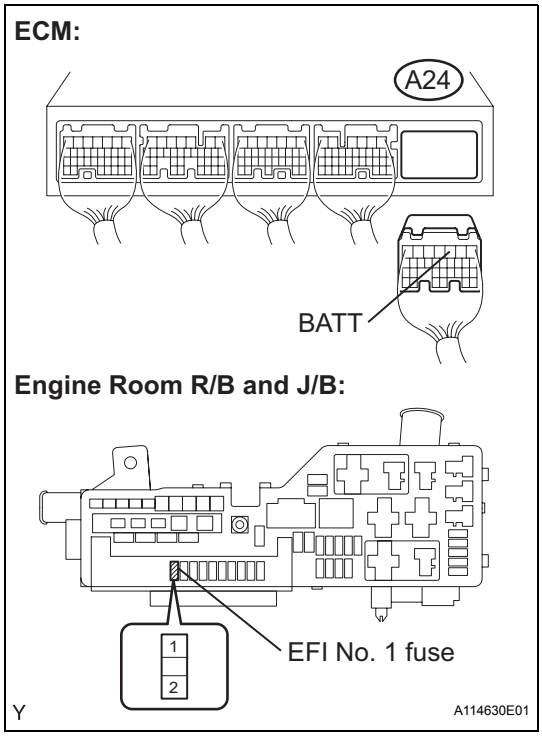

(a) Check the harness and the connector between the EFI No. 1 fuse and ECM.
  (1) Remove the EFI No. 1 fuse from the engine room R/B and J/B.
  (2) Disconnect the A24 ECM connector.
  (3) Measure the resistance.

Standard resistance (Check for open)

Tester Connections	Specified Conditions
EFI No. 1 fuse (2) - BATT (A24-3)	Below 1 Ω

Standard resistance (Check for short)

Tester Connections	Specified Conditions
EFI No. 1 fuse (2) or BATT (A24-3) - Body ground	10 kΩ or higher

  (4) Reconnect the ECM connector.
  (5) Reinstall the EFI No. 1 fuse.

(b) Check the harness and the connector between the EFI No. 1 fuse and battery.
  (1) Remove the EFI No. 1 fuse from the engine room R/B and J/B.
  (2) Disconnect the negative battery cable.
  (3) Measure the resistance.

Standard resistance (Check for open)

Tester Connections	Specified Conditions
Battery positive terminal - EFI No .1 fuse (1)	Below 1 Ω

Standard resistance (Check for short)

Tester Connections	Specified Conditions
Battery positive terminal or EFI No. 1 fuse (1) - Body ground	10 kΩ or higher

  (4) Reconnect the negative battery cable.
  (5) Reinstall the EFI No. 1 fuse.

NG → **REPAIR OR REPLACE HARNESS OR CONNECTOR**

OK

4	INSPECT BATTERY

(a) Check that the battery is not depleted.

NG → **REPLACE BATTERY**

OK

CHECK AND REPLACE ENGINE ROOM RELAY BLOCK

DTC	P0604	Internal Control Module Random Access Memory (RAM) Error

DTC	P0606	ECM / PCM Processor

DTC	P0607	Control Module Performance

DTC	P0657	Actuator Supply Voltage Circuit / Open

MONITOR DESCRIPTION

The ECM continuously monitors its own internal memory status, internal circuits, and output signals transmitted to the throttle actuator. This self-check ensures that the ECM is functioning properly. If any malfunction is detected, the ECM sets the appropriate DTC and illuminates the MIL.
The ECM memory status is diagnosed by internal mirroring of the main CPU and the sub CPU to detect Random Access Memory (RAM) errors. The two CPUs also perform continuous mutual monitoring. The ECM illuminates the MIL and sets a DTC if: 1) outputs from the two CPUs are different or deviate from the standards, 2) the signals sent to the throttle actuator deviate from the standards, 3) a malfunction is found in the throttle actuator supply voltage, and 4) any other ECM malfunction is found.

DTC No.	DTC Detection Conditions	Trouble Areas
P0604 P0606 P0607 P0657	ECM internal error (1 trip detection logic)	ECM

MONITOR STRATEGY

Related DTCs	P0604: ECM RAM error P0606: ECM range check P0607: ECM CPU malfunction P0657: ETCS power supply
Required Sensors / Components (Main)	ECM
Required Sensors / Components (Related)	-
Frequency of Operation	Continuous
Duration	Within 1 second
MIL Operation	Immediate
Sequence of Operation	None

TYPICAL ENABLING CONDITIONS

The monitor will run whenever these DTCs are not present	None

TYPICAL MALFUNCTION THRESHOLDS

ECM RAM errors (P0604):

RAM mirror	RAM mirror check failure

ECM CPU range check (P0606):

Either of following conditions met:	-
Difference between throttle valve position of main CPU and throttle valve position of sub CPU	0.3 V or more
Difference between accelerator pedal position of main CPU and accelerator pedal position of sub CPU	0.3 V or more

ECM CPU malfunction (P0607):

Either of the following conditions met	Condition A or B
A. All of following condition met	Condition 1, 2 and 3
1. CPU reset	1 time
2. Learned TP - learned APP	0.4 V or more
3. Throttle actuator	OFF
B. CPU reset	2 times or more

Electronic throttle control system power supply function of ECM malfunctions (P0657):

ETCS (Electronic Throttle Control System) power supply when ignition switch turned to ON	7 V or more

ES

INSPECTION PROCEDURE

HINT:

Read freeze frame data using the intelligent tester. The ECM records vehicle and driving condition information as freeze frame data the moment a DTC is stored. When troubleshooting, freeze frame data can be helpful in determining whether the vehicle was running or stopped, whether the engine was warmed up or not, whether the air/fuel ratio was lean or rich, as well as other data recorded at the time of a malfunction.

1	**REPLACE ECM**

(a) Replace the ECM (See page ES-446).

NEXT

END

DTC	P0617	Starter Relay Circuit High

MONITOR DESCRIPTION

While the engine is being cranked, the positive battery voltage is applied to terminal STA of the ECM. If the ECM detects the Starter Control (STA) signal while the vehicle is being driven, it determines that there is a malfunction in the STA circuit. The ECM then illuminates the MIL and sets the DTC.
This monitor runs when the vehicle is driven at 12.4 mph (20 km/h) for over 20 seconds.

DTC No.	DTC Detection Conditions	Trouble Areas
P0617	When conditions (a), (b) and (c) are met, positive (+B) battery voltage 10.5 V or more is applied to ECM for 20 seconds (1 trip detection logic): (a) Vehicle speed more than 12.4 mph (20 km/h) (b) Engine speed more than 1,000 rpm (c) STA signal ON	• Park/Neutral Position (PNP) switch • Starter relay circuit • Ignition switch • ECM

ES

MONITOR STRATEGY

Related DTCs	P0617: Starter signal
Required Sensors / Components (Main)	STARTER relay, PNP switch, Clutch start switch and Ignition switch
Required Sensors / Components (Related)	Vehicle Speed Sensor (VSS), Crankshaft Position (CKP) sensor
Frequency of Operation	Continuous
Duration	20 seconds
MIL Operation	Immediate
Sequence of Operation	None

TYPICAL ENABLING CONDITIONS

The monitor will run whenever these DTCs are not present	None
Battery voltage	10.5 V or more
Vehicle speed	12.4 mph (20 km/h) or more
Engine speed	1,000 rpm or more

TYPICAL MALFUNCTION THRESHOLDS

Starter signal	ON

WIRING DIAGRAM

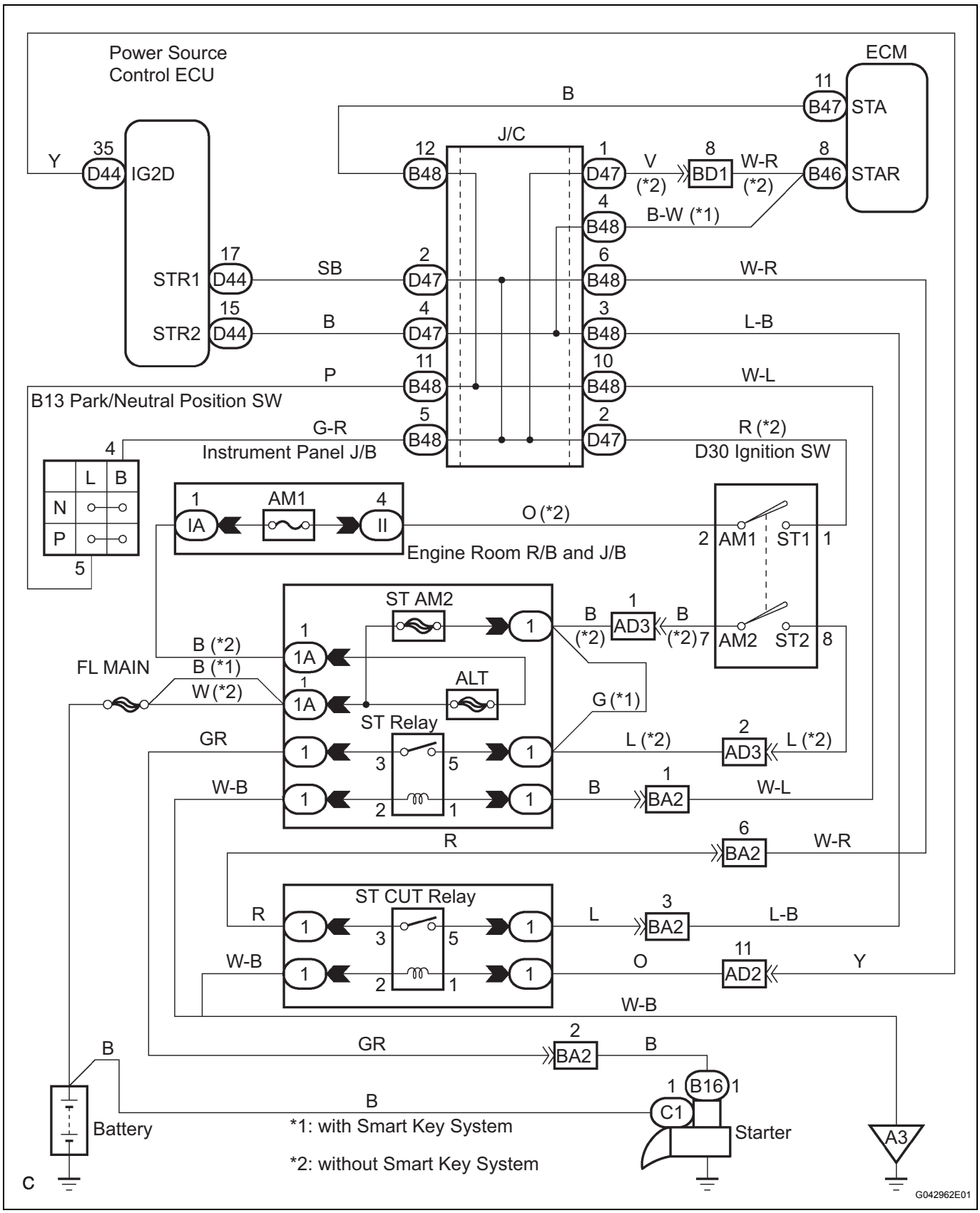

INSPECTION PROCEDURE

HINT:

- The following troubleshooting flowchart is based on the premise that the engine is cranked normally. If the engine will not crank, proceed to the problem symptoms table (See page ES-30).
- Read freeze frame data using the intelligent tester. The ECM records vehicle and driving condition information as freeze frame data the moment a DTC is stored. When troubleshooting, freeze frame data can be helpful in determining whether the vehicle was running or stopped, whether the engine was warmed up or not, whether the air/fuel ratio was lean or rich, as well as other data recorded at the time of a malfunction.

1 READ VALUE OF INTELLIGENT TESTER (STARTER SIGNAL)

(a) Connect an intelligent tester to the DLC3.
(b) Turn the ignition switch on (IG) and turn the tester on.
(c) Select the following menu items: DIAGNOSIS / ENHANCED OBD II / DATA LIST / ALL / STARTER SIG.
(d) Check the value displayed on the tester when the ignition switch is turned on (IG) and START positions.

OK

Ignition Switch Positions	STARTER SIG
ON	OFF
START	ON

OK → **REPLACE ECM**

NG

2 INSPECT PARK/NEUTRAL POSITION SWITCH

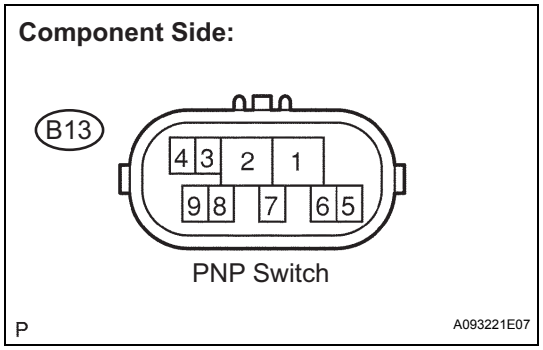

(a) Inspect the Park/Neutral Position (PNP) switch.
(1) Disconnect the B13 PNP switch connector.
(2) Measure the resistance when the transmission gear selector lever is moved to each position.

Standard resistance

Gear Selector Lever Positions	Tester Connections	Specified Conditions
P	2 - 6, 4 - 5	Below 1 Ω
R	1 - 2	Below 1 Ω
N	2 - 9, 4 - 5	Below 1 Ω
D	2 - 7	Below 1 Ω
2	2 - 3	Below 1 Ω
L	2 - 8	Below 1 Ω

(3) Reconnect the PNP switch connector.

NG → **REPLACE PARK/NEUTRAL POSITION SWITCH**

OK

3	READ VALUE OF INTELLIGENT TESTER (STARTER SIGNAL)

(a) Connect the intelligent tester to the DLC3.
(b) Turn the ignition switch on (IG) and turn the tester on.
(c) Select the following menu items: DIAGNOSIS / ENHANCED OBD II / DATA LIST / ALL / STARTER SIG.
(d) Check the value displayed on the tester when the ignition switch is turned on (IG) and engine start.

OK

Ignition Switch Positions	STARTER SIG
ON	OFF
START	ON

ES

OK → **SYSTEM OK**

NG

4	INSPECT IGNITION OR STARTER SWITCH ASSEMBLY

(a) Inspect the ignition or starter switch assembly (See page ST-85).

NG → **REPLACE IGNITION OR STARTER SWITCH ASSEMBLY**

OK

5	READ VALUE OF INTELLIGENT TESTER (STARTER SIGNAL)

(a) Connect the intelligent tester to the DLC3.
(b) Turn the ignition switch on (IG) and turn the tester on.
(c) Select the following menu items: DIAGNOSIS / ENHANCED OBD II / DATA LIST / PRIMARY / STARTER SIG.
(d) Check the value displayed on the tester when the ignition switch is turned on (IG) and engine start.

OK

Ignition Switch Positions	STARTER SIG
ON	OFF
START	ON

OK → **SYSTEM OK**

NG

REPAIR OR REPLACE HARNESS OR CONNECTOR

DTC	P0630	VIN not Programmed or Mismatch - ECM / PCM

DESCRIPTION

DTC P0630 is set when the Vehicle Identification Number (VIN) is not stored in the Engine Control Module (ECM) or the input VIN is not accurate. Input the VIN with the intelligent tester.

DTC No.	DTC Detection Conditions	Trouble Areas
P0630	• VIN is not stored in ECM • Input VIN in ECM is not accurate	ECM

MONITOR STRATEGY

Related DTCs	P0630: VIN not programmed
Required Sensors / Components (Main)	ECM
Required Sensors / Components (Related)	-
Frequency of Operation	Continuous
Duration	0.325 seconds
MIL Operation	Immediate
Sequence of Operation	None

TYPICAL ENABLING CONDITIONS

The monitor will run whenever these DTCs are not present	None
Battery voltage	8 V or more
Ignition switch	ON
Ignition switch	OFF

TYPICAL MALFUNCTION THRESHOLDS

VIN code	Not programmed

COMPONENT OPERATING RANGE

VIN code	Programmed

INSPECTION PROCEDURE

1	READ CURRENT DTC

(a) Connect the intelligent tester to the DLC3.
(b) Turn the ignition switch on (IG) and turn the tester on.
(c) Select the following menu items: DIAGNOSIS / ENHANCED OBD II / DTC INFO / CURRENT CODES.
(d) Read DTCs.

Result

Display (DTC Output)	Proceed to
P0630	A
P0630 and other DTCs	B

If any DTCs other than P0630 are output, troubleshoot those DTCs first.

NOTICE:
If P0630 is set, the VIN must be input to the ECM using the intelligent tester. However, all DTCs are cleared automatically by the tester when inputting the VIN. If DTCs other than P0630 are set, check them first.

B → **GO TO DTC CHART**

A

2	INPUT VIN WITH INTELLIGENT TESTER

ES

HINT:
Refer to "REGISTRATION" (See page ES-19).

NEXT

3	READ CURRENT DTC

(a) Connect the intelligent tester to the DLC3.
(b) Turn the ignition switch on (IG) and turn the tester on.
(c) Select the following menu items: DIAGNOSIS / ENHANCED OBD II / DTC INFO / CURRENT CODES.
(d) Read DTC again.
Result:
DTC is not output (P0630).

NG → **REPLACE ECM**

OK

END

DTC	P2102	Throttle Actuator Control Motor Circuit Low

DTC	P2103	Throttle Actuator Control Motor Circuit High

DESCRIPTION

The throttle actuator is operated by the ECM and opens and closes the throttle valve using gears.
The opening angle of the throttle valve is detected by the Throttle Position (TP) sensor, which is mounted on the throttle body. The TP sensor provides feedback to the ECM. This feedback allows the ECM to appropriately control the throttle actuator and monitor the throttle opening angle as the ECM responds to driver inputs.
HINT:
This ETCS (Electronic Throttle Control System) does not use a throttle cable.

DTC No.	DTC Detection Conditions	Trouble Areas
P2102	Conditions (a) and (b) continue for 2.0 seconds (1 trip detection logic): (a) Throttle actuator duty ratio exceeds 80% or more (b) Throttle actuator current is 0.5 A or less	• Open in throttle actuator circuit • Throttle actuator • ECM
P2103	Throttle actuator current is 7 A or more for 0.6 seconds (1 trip detection logic)	• Short in throttle actuator circuit • Throttle actuator • Throttle valve • Throttle body • ECM

MONITOR DESCRIPTION

The ECM monitors the electrical current through the electronic actuator, and detects malfunctions and open circuits in the throttle actuator based on this value. If the current is outside the standard range, the ECM determines that there is a malfunction in the throttle actuator. In addition, if the throttle valve does not function properly (for example, stuck on), the ECM determines that there is a malfunction. The ECM then illuminates the MIL and sets a DTC.
Example:
When the electrical current is more than 10 A, or less than 0.5 A and the throttle actuator duty ratio exceeds 80%, the ECM interprets this as the current being outside the standard range, and illuminates the MIL and sets a DTC.
If the malfunction is not repaired successfully, a DTC is set when the engine is quickly revved to a high rpm several times after the engine has idled for 5 seconds after engine start.

MONITOR STRATEGY

Related DTCs	P2102: Throttle actuator current (low current) P2103: Throttle actuator current (high current)
Required Sensors / Components (Main)	Throttle actuator (throttle body)
Required Sensors / Components (Related)	None
Frequency of Operation	Continuous
Duration	P2102: 2 seconds P2103: 25 times or 0.6 seconds
MIL Operation	Immediate
Sequence of Operation	None

TYPICAL ENABLING CONDITIONS

The monitor will run whenever these DTCs are not present	None

P2102:

Throttle motor	ON
Duty-cycle ratio to open throttle actuator	80% or more
Throttle actuator power supply	8 V or more
Current motor current - Motor current at 0.016 sec. before	Less than 0.2 A

P2103:

Throttle motor	ON
Either of the following conditions met:	Condition 1 or 2
1. Throttle actuator power supply	8 V or more
2. Throttle actuator power	ON
Battery voltage	8 V or more
Starter	OFF

TYPICAL MALFUNCTION THRESHOLDS

P2102:

Throttle actuator current	Less than 0.5 A

P2103:

Either of the following conditions met	Condition 1 or 2
1. Hybrid IC diagnosis signal	Fail for 25 times
2. Hybrid IC current limiter port	Fail for 0.6 seconds

FAIL-SAFE

When either of these DTCs, as well as other DTCs relating to ETCS (Electronic Throttle Control System) malfunctions, is set, the ECM enters fail-safe mode. During fail-safe mode, the ECM cuts the current to the throttle actuator off, and the throttle valve is returned to a 6° throttle angle by the return spring. The ECM then adjusts the engine output by controlling the fuel injection (intermittent fuel-cut) and ignition timing, in accordance with the accelerator pedal opening angle, to allow the vehicle to continue at a minimal speed.

If the accelerator pedal is depressed firmly and gently, the vehicle can be driven slowly.

Fail-safe mode continues until a pass condition is detected, and the ignition switch is then turned off.

WIRING DIAGRAM

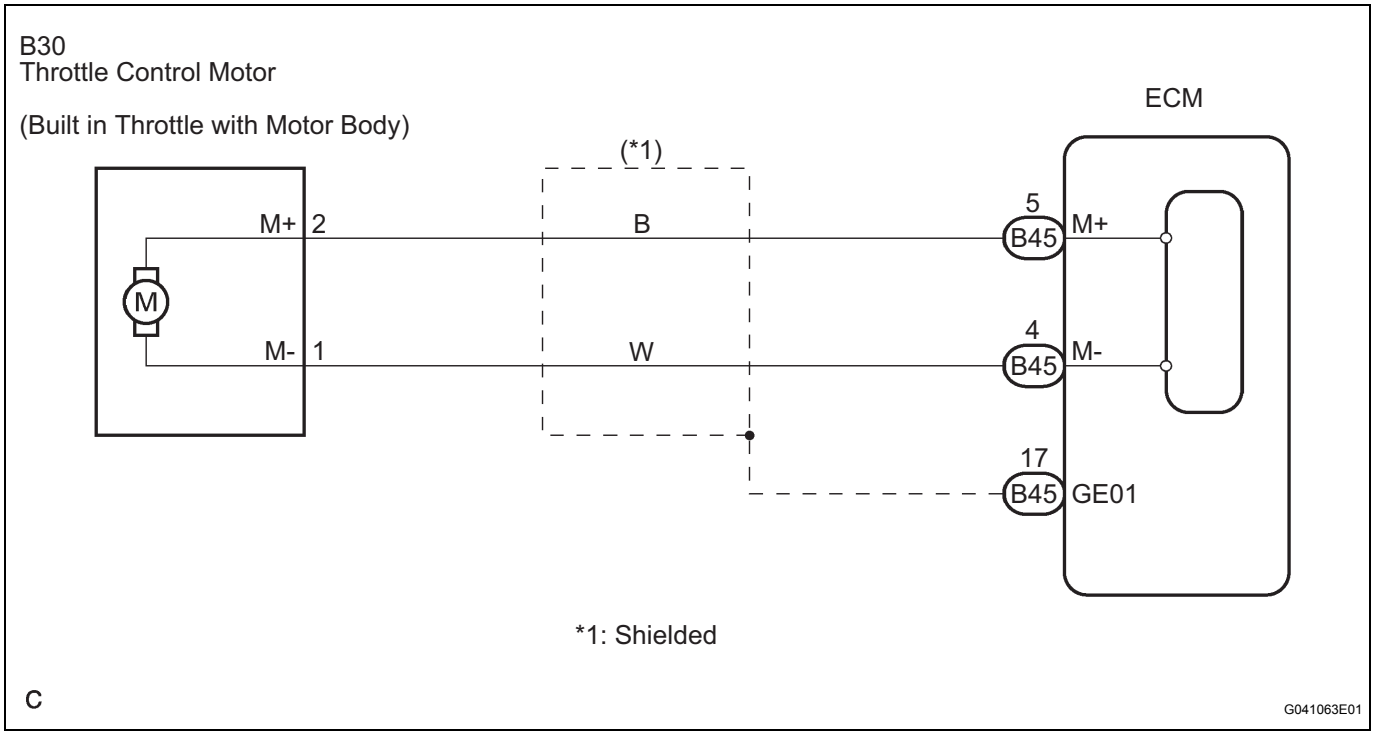

ES

INSPECTION PROCEDURE

HINT:

- Read freeze frame data using the intelligent tester. The ECM records vehicle and driving condition information as freeze frame data the moment a DTC is stored. When troubleshooting, freeze frame data can be helpful in determining whether the vehicle was running or stopped, whether the engine was warmed up or not, whether the air/fuel ratio was lean or rich, as well as other data recorded at the time of a malfunction.
- The throttle actuator current (THROTTLE MOT) and the throttle actuator duty ratio (THROTTLE OPN / THROTTLE CLS) can be read using the intelligent tester. However the ECM shuts off the throttle actuator current when the ETCS malfunctions.

1	INSPECT THROTTLE WITH MOTOR BODY ASSEMBLY (RESISTANCE OF THROTTLE CONTROL MOTOR)

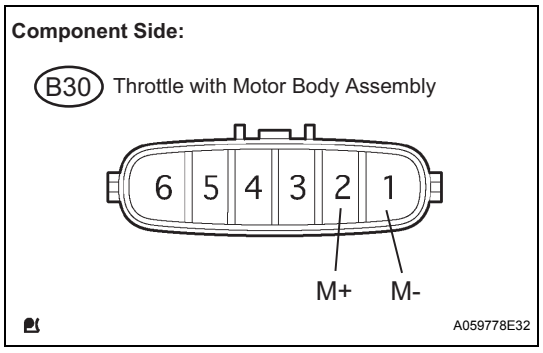

(a) Disconnect the B30 throttle with motor body connector.
(b) Measure the resistance between the terminals of the throttle control motor.
Standard resistance

Tester Connections	Specified Conditions
M+ (B30-2) - M- (B30-1)	0.3 to 100 Ω at 20°C (68°F)

(c) Reconnect the throttle with motor body connector.

NG → **REPLACE THROTTLE WITH MOTOR BODY ASSEMBLY**

OK

2	CHECK HARNESS AND CONNECTOR (THROTTLE CONTROL MOTOR - ECM)

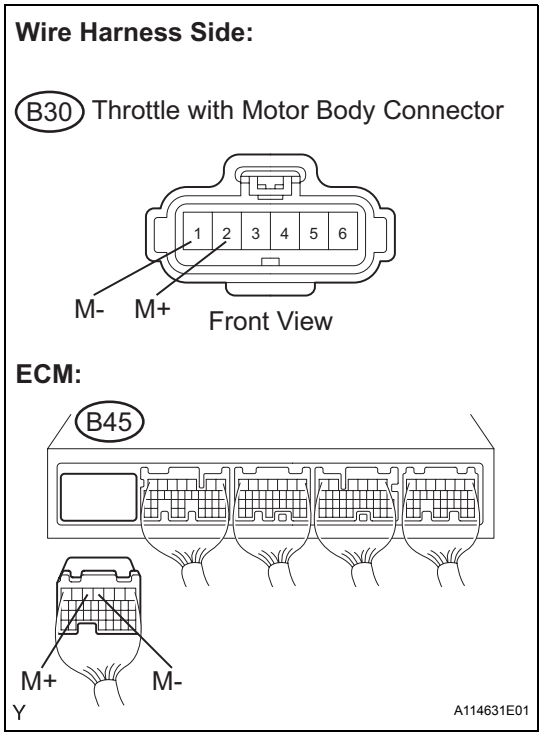

(a) Disconnect the B30 throttle with motor body connector.
(b) Disconnect the B45 ECM connector.
(c) Measure the resistance.

Standard resistance (Check for open)

Tester Connections	Specified Conditions
M+ (B30-2) - M+ (B45-5)	Below 1 Ω
M- (B30-1) - M- (B45-4)	Below 1 Ω

Standard resistance (Check for short)

Tester Connections	Specified Conditions
M+ (B30-2) or M+ (B45-5) - Body ground	10 kΩ or higher
M- (B30-1) or M- (B45-4) - Body ground	10 kΩ or higher

(d) Reconnect the throttle with motor body connector.
(e) Reconnect the ECM connector.

NG → **REPAIR OR REPLACE HARNESS OR CONNECTOR**

OK

3	INSPECT THROTTLE WITH MOTOR BODY ASSEMBLY

(a) Check for foreign objects between the throttle valve and the housing.

OK:

Normal

NG → **REMOVE FOREIGN OBJECT AND CLEAN THROTTLE BODY**

OK

4	INSPECT THROTTLE VALVE

(a) Check if the throttle valve opens and closes smoothly.

OK:

The throttle valve opens and closes smoothly.

NG → **REPLACE THROTTLE WITH MOTOR BODY ASSEMBLY**

OK

REPLACE ECM

DTC	P2111	Throttle Actuator Control System - Stuck Open

DTC	P2112	Throttle Actuator Control System - Stuck Closed

DESCRIPTION

The throttle actuator is operated by the ECM, and opens and closes the throttle valve using gears. The opening angle of the throttle valve is detected by the Throttle Position (TP) sensor, which is mounted on the throttle body. The TP sensor provides feedback to the ECM so that it can control the throttle actuator, and the throttle valve, appropriately in response to driver inputs.
HINT:
This ETCS (Electronic Throttle Control System) does not use a throttle cable.

DTC No.	DTC Detection Conditions	Trouble Areas
P2111	ECM signals throttle actuator to close, but stuck (1 trip detection logic)	• Throttle actuator • Throttle body • Throttle valve
P2112	ECM signals throttle actuator to open, but stuck (1 trip detection logic)	• Throttle actuator • Throttle body • Throttle valve

MONITOR DESCRIPTION

The ECM determines that there is a malfunction in the ETCS when the throttle valve remains at the fixed angle despite a high drive current from the ECM. The ECM illuminates the MIL and sets a DTC.
If the malfunction is not repaired successfully, a DTC is set when the accelerator pedal is fully depressed and released quickly (to fully open and close the throttle valve) after the engine is next started.

MONITOR STRATEGY

Related DTCs	P2111: Throttle actuator stuck open P2112: Throttle actuator stuck closed
Required Sensors / Components (Main)	Throttle actuator
Required Sensors / Components (Related)	-
Frequency of Operation	Continuous
Duration	0.5 seconds
MIL Operation	Immediate
Sequence of Operation	None

TYPICAL ENABLING CONDITIONS

All:

The monitor will run whenever these DTCs are not present	None

P2111 (Throttle actuator stuck open):

All of following conditions met	-
System guard*	ON
Throttle actuator current	2 A or more
Throttle actuator close duty ratio	80% or more

P2112 (Throttle actuator stuck closed):

All of following conditions met	-
System guard*	ON
Throttle actuator current	2 A or more

Throttle actuator open duty-cycle	80% or more

*: System guard set when following conditions met

Throttle actuator	ON
Throttle actuator duty calculation	Executing
Throttle position sensor	Fail determined
Throttle actuator current-cut operation	Not executing
Throttle actuator power supply	4 V or more
Throttle actuator	Fail determined

TYPICAL MALFUNCTION THRESHOLDS

P2111 (Throttle actuator stuck open):

TP sensor voltage change	No change

P2112 (Throttle actuator stuck closed):

TP sensor voltage change	No change

FAIL-SAFE

When either of these DTCs, as well as other DTCs relating to ETCS (Electronic Throttle Control System) malfunctions, is set, the ECM enters fail-safe mode. During fail-safe mode, the ECM cuts the current to the throttle actuator off, and the throttle valve is returned to a 6° throttle angle by the return spring. The ECM then adjusts the engine output by controlling the fuel injection (intermittent fuel-cut) and ignition timing, in accordance with the accelerator pedal opening angle, to allow the vehicle to continue at a minimal speed.
If the accelerator pedal is fully depressed slowly, the vehicle can be driven slowly.
Fail-safe mode continues until a pass condition is detected, and the ignition switch is then turned off.

WIRING DIAGRAM

Refer to DTC P2102 (See page ES-289).

INSPECTION PROCEDURE

HINT:
Read freeze frame data using the intelligent tester. The ECM records vehicle and driving condition information as freeze frame data the moment a DTC is stored. When troubleshooting, freeze frame data can be helpful in determining whether the vehicle was running or stopped, whether the engine was warmed up or not, whether the air/fuel ratio was lean or rich, as well as other data recorded at the time of a malfunction.

1	**CHECK ANY OTHER DTCS OUTPUT (IN ADDITION TO DTC P2111 OR P2112)**

(a) Connect the intelligent tester to the DLC3.
(b) Turn the ignition switch on (IG).
(c) Turn the tester on.
(d) Select the following menu items: DIAGNOSIS / ENHANCED OBD II / DTC INFO / CURRENT CODES.
(e) Read DTCs.

Result

Display (DTC Output)	Proceed to
P2111 or P2112	A
P2111 or P2112 and other DTCs	B

HINT:
If any DTCs other than P2111 or P2112 are output, troubleshoot those DTCs first.

B → GO TO DTC CHART

A

2 INSPECT THROTTLE WITH MOTOR BODY ASSEMBLY (VISUALLY CHECK THROTTLE VALVE)

(a) Check for contamination between the throttle valve and the housing. If necessary, clean the throttle body. And check that the throttle valve moves smoothly.
OK:
Throttle valve is not contaminated with foreign objects and moves smoothly.

NG → **REPLACE THROTTLE WITH MOTOR BODY ASSEMBLY**

OK

3 CHECK WHETHER DTC OUTPUT RECURS (DTC P2111 OR P2112)

(a) Connect the intelligent tester to the DLC3.
(b) Turn the ignition switch on (IG).
(c) Turn the tester on.
(d) Clear DTCs (See page ES-44).
(e) Start the engine, and fully depress and release the accelerator pedal quickly (to fully open and close the throttle valve).
(f) Select the following menu items: DIAGNOSIS / ENHANCED OBD II / DTC INFO / CURRENT CODES.
(g) Read DTCs.

Result

Display (DTC Output)	Proceed to
No DTC	A
P2111 or P2112	B

B → **REPLACE ECM**

A

CHECK FOR INTERMITTENT PROBLEMS

DTC	P2118	Throttle Actuator Control Motor Current Range / Performance

DESCRIPTION

The ETCS (Electronic Throttle Control System) has a dedicated power supply circuit. The voltage (+BM) is monitored and when it is low (less than 4 V), the ECM determines that there is a malfunction in the ETCS and cuts off the current to the throttle actuator.
When the voltage becomes unstable, the ETCS itself becomes unstable. For this reason, when the voltage is low, the current to the throttle actuator is cut. If repairs are made and the system returns to normal, turn the ignition switch off. The ECM then allows the current to flow to the throttle actuator so that it can be restarted.

ES

HINT:
The ETCS does not use a throttle cable.

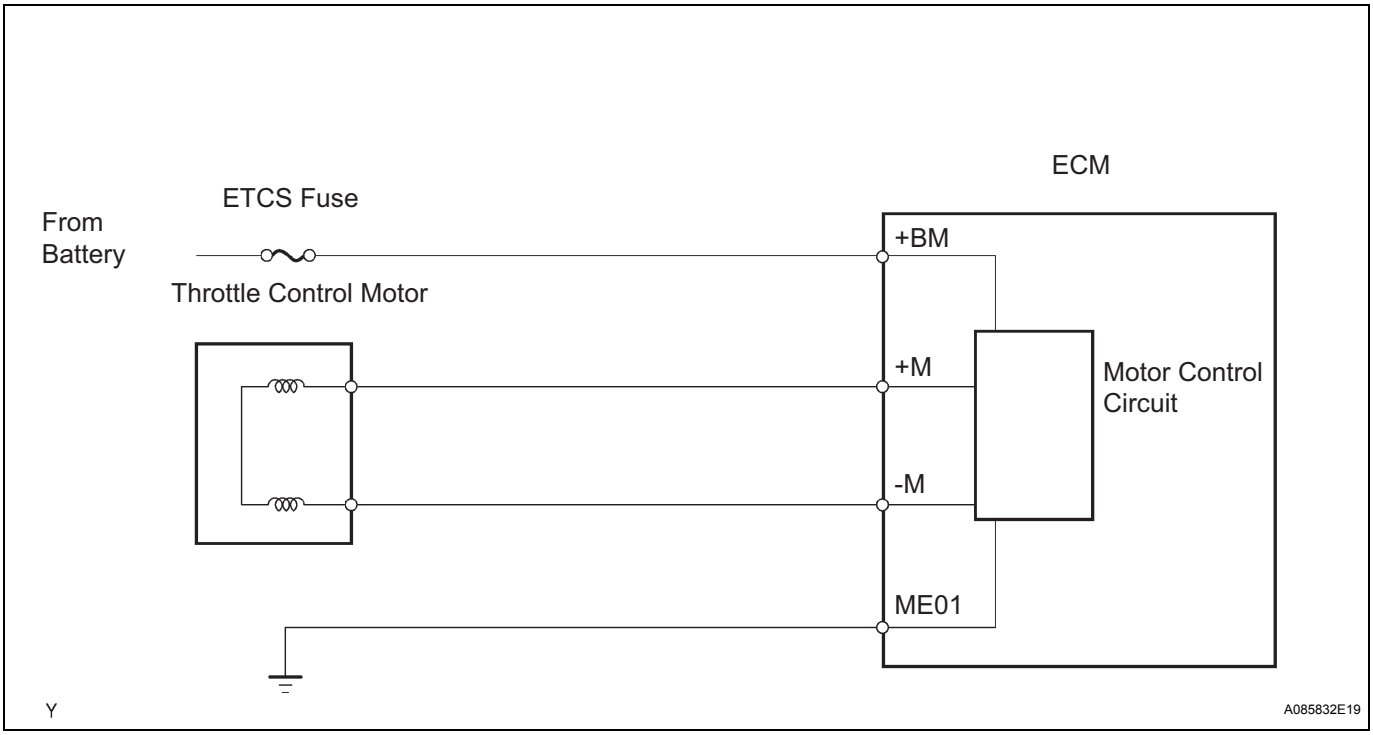

DTC No.	DTC Detection Conditions	Trouble Areas
P2118	Open in ETCS power source (+BM) circuit (1 trip detection logic)	• Open in ETCS power source circuit • ETCS fuse • ECM

MONITOR DESCRIPTION

The ECM monitors the battery supply voltage applied to the throttle actuator.
When the power supply voltage (+BM) drops below 4 V for 0.8 seconds or more, the ECM interprets this as an open in the power supply circuit (+BM). The ECM illuminates the MIL and sets the DTC.
If the malfunction is not repaired successfully, the DTC is set 5 seconds after the engine is next started.

MONITOR STRATEGY

Related DTCs	P2118: Throttle actuator power supply
Required Sensors / Components (Main)	Throttle actuator, throttle valve, ETCS fuse
Required Sensors / Components (Related)	None
Frequency of Operation	Continuous
Duration	0.8 seconds

MIL Operation	Immediate
Sequence of Operation	None

TYPICAL ENABLING CONDITIONS

The monitor will run whenever these DTCs are not present	None
Battery voltage	8 V or more
Actuator	ON

TYPICAL MALFUNCTION THRESHOLDS

Throttle actuator power supply voltage (+BM)	Less than 4 V

ES

COMPONENT OPERATING RANGE

Throttle actuator power supply voltage	9 to 14 V

FAIL-SAFE

When this DTC, as well as other DTCs relating to ETCS (Electronic Throttle Control System) malfunctions, is set, the ECM enters fail-safe mode. During fail-safe mode, the ECM cuts the current to the throttle actuator off, and the throttle valve is returned to a 6° throttle angle by the return spring. The ECM then adjusts the engine output by controlling the fuel injection (intermittent fuel-cut) and ignition timing, in accordance with the accelerator pedal opening angle, to allow the vehicle to continue at a minimal speed. If the accelerator pedal is depressed firmly and gently, the vehicle can be driven slowly. Fail-safe mode continues until a pass condition is detected, and the ignition switch is then turned off.

WIRING DIAGRAM

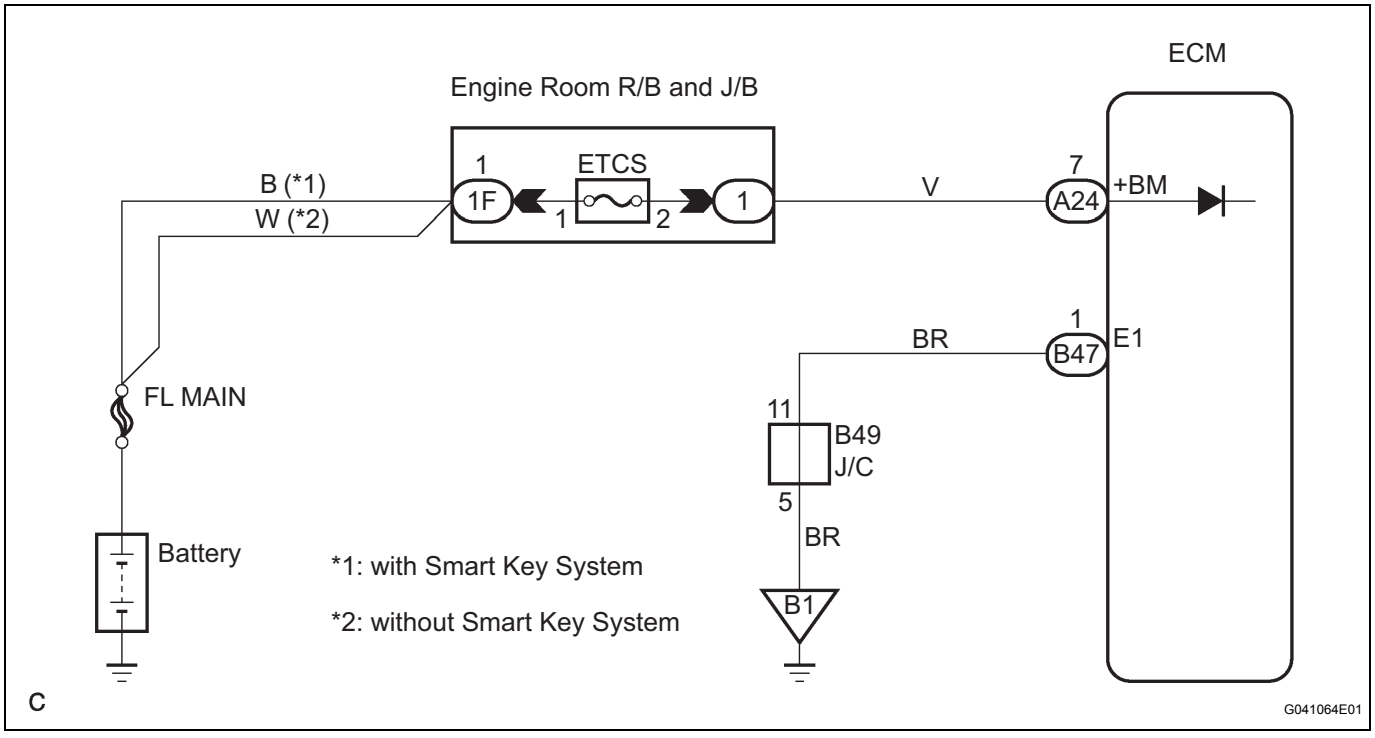

INSPECTION PROCEDURE

HINT:
Read freeze frame data using the intelligent tester. The ECM records vehicle and driving condition information as freeze frame data the moment a DTC is stored. When troubleshooting, freeze frame data can be helpful in determining whether the vehicle was running or stopped, whether the engine was warmed up or not, whether the air/fuel ratio was lean or rich, as well as other data recorded at the time of a malfunction.

1	CHECK FUSE (ETCS FUSE)

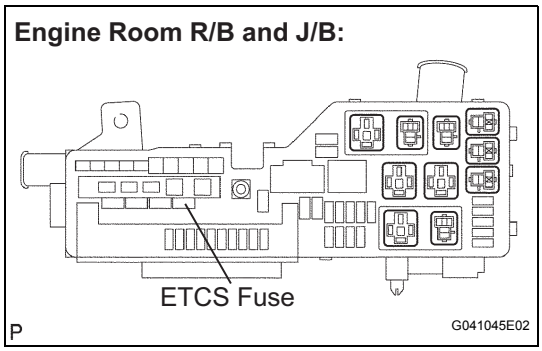

(a) Remove the ETCS fuse from the engine room R/B and J/B.
(b) Check the ETCS fuse resistance.
Standard resistance:
Below 1 Ω
(c) Reinstall the ETCS fuse.

NG → **CHECK FOR SHORTS IN ALL HARNESSES AND CONNECTORS CONNECTED TO FUSE AND REPLACE FUSE**

OK

2	INSPECT ECM (+BM VOLTAGE)

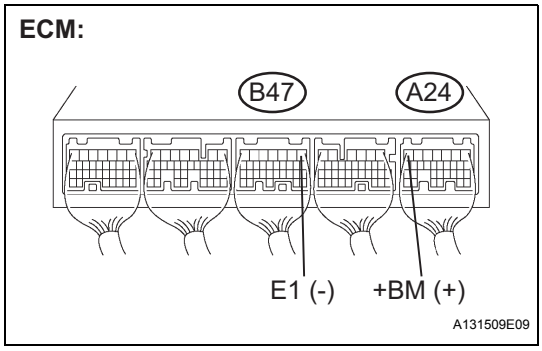

(a) Measure the voltage between the terminals of the A24 and B47 ECM connectors.
Standard voltage

Tester Connections	Specified Conditions
+BM (A24-7) - E1 (B47-1)	9 to 14 V

OK → **CHECK FOR INTERMITTENT PROBLEMS**

NG

3	CHECK HARNESS AND CONNECTOR (ECM - ETCS FUSE, ETCS FUSE - BATTERY)

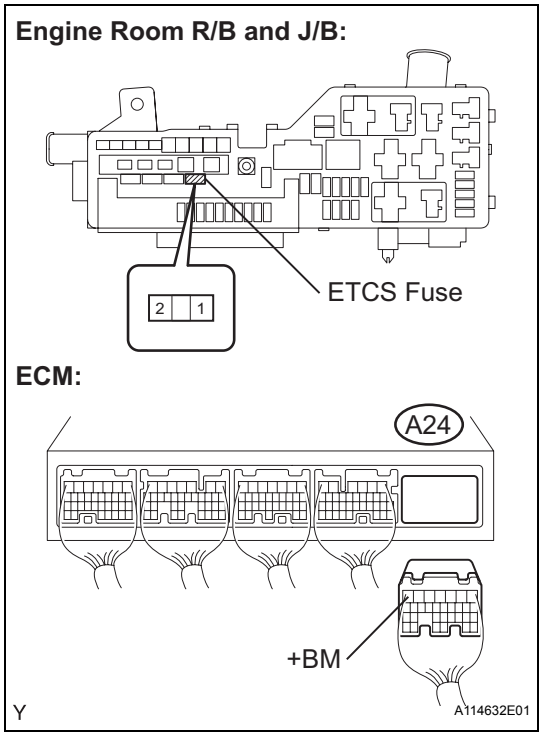

(a) Check the harness and connector between the ETCS fuse and ECM.
  (1) Remove the ETCS fuse from the engine room R/B and J/B.
  (2) Disconnect the A24 ECM connector.
  (3) Check the resistance.

Standard resistance (Check for open)

Tester Connections	Specified Conditions
ETCS fuse (2) - +BM (A24-7)	Below 1 Ω

Standard resistance (Check for short)

Tester Connections	Specified Conditions
ETCS fuse (2) or +BM (A24-7) - Body ground	10 kΩ or higher

  (4) Reconnect the ECM connector.

(b) Check the harness and connector between the ETCS fuse and positive battery cable.
  (1) Disconnect the negative battery cable.
  (2) Check the resistance.

Standard resistance (Check for open)

Tester Connections	Specified Conditions
Positive battery cable - ETCS fuse (1)	Below 1 Ω

Standard resistance (Check for short)

Tester Connections	Specified Conditions
Positive battery cable or ETCS fuse (1) - Body ground	10 kΩ or higher

  (3) Reinstall the ETCS fuse.
  (4) Reconnect the negative battery cable.

NG → **REPAIR OR REPLACE HARNESS OR CONNECTOR**

OK

REPLACE ECM

ES

DTC	P2119	Throttle Actuator Control Throttle Body Range / Performance

DESCRIPTION

The Electronic Throttle Control System (ETCS) is composed of the throttle actuator, Throttle Position (TP) sensor, Accelerator Pedal Position (APP) sensor, and ECM. The ECM operates the throttle actuator to regulate the throttle valve in response to driver inputs. The TP sensor detects the opening angle of the throttle valve, and provides the ECM with feedback so that the throttle valve can be appropriately controlled by the ECM.

DTC No.	DTC Detection Conditions	Trouble Areas
P2119	Throttle valve opening angle continues to vary greatly from target opening angle (1 trip detection logic)	• ETCS • ECM

ES

MONITOR DESCRIPTION

The ECM determines the actual opening angle of the throttle valve from the TP sensor signal. The actual opening angle is compared to the target opening angle commanded by the ECM. If the difference between these two values is outside the standard range, the ECM interprets this as a malfunction in the ETCS. The ECM then illuminates the MIL and sets the DTC.
If the malfunction is not repaired successfully, the DTC is set when the accelerator pedal is quickly released (to close the throttle valve) after the engine speed reaches 5,000 rpm by the accelerator pedal being fully depressed (fully open the throttle valve).

MONITOR STRATEGY

Related DTCs	P2119: ETCS malfunction
Required Sensors / Components (Main)	Throttle actuator
Required Sensors / Components (Related)	-
Frequency of Operation	Continuous
Duration	1 second
MIL Operation	Immediate
Sequence of Operation	None

TYPICAL ENABLING CONDITIONS

The monitor will run whenever these DTCs are not present	None
System guard*	ON
*System guard set when following conditions met	-
Throttle actuator	ON
Throttle actuator duty calculation	Executing
TP sensor	Fail determined
Throttle actuator current-cut operation	Not executing
Throttle actuator power supply	4 V or more
Throttle actuator	Fail determined

TYPICAL MALFUNCTION THRESHOLDS

Either of following conditions met	Condition A or B
A. Commanded closed TP - current closed TP	0.3 V or more
B. Commanded open TP - current open TP	0.3 V or more

FAIL-SAFE

When this DTC, as well as other DTCs relating to ETCS (Electronic Throttle Control System) malfunctions, is set, the ECM enters fail-safe mode. During fail-safe mode, the ECM cuts the current to the throttle actuator off, and the throttle valve is returned to a 6° throttle angle by the return spring. The ECM then adjusts the engine output by controlling the fuel injection (intermittent fuel-cut) and ignition timing, in accordance with the accelerator pedal opening angle, to allow the vehicle to continue at a minimal speed. If the accelerator pedal is fully depressed slowly, the vehicle can be driven slowly. Fail-safe mode continues until a pass condition is detected, and the ignition switch is then turned off.

WIRING DIAGRAM

Refer to DTC P2102 (See page ES-289).

INSPECTION PROCEDURE

ES

HINT:

Read freeze frame data using the intelligent tester. The ECM records vehicle and driving condition information as freeze frame data the moment a DTC is stored. When troubleshooting, freeze frame data can be helpful in determining whether the vehicle was running or stopped, whether the engine was warmed up or not, whether the air/fuel ratio was lean or rich, as well as other data recorded at the time of a malfunction.

1	CHECK ANY OTHER DTCS OUTPUT (IN ADDITION TO DTC P2119)

(a) Connect the intelligent tester to the DLC3.
(b) Turn the ignition switch on (IG).
(c) Turn the tester on.
(d) Select the following menu items: DIAGNOSIS / ENHANCED OBD II / DTC INFO / CURRENT CODES.
(e) Read DTCs.

Result

Display (DTC Output)	Proceed to
P2119	A
P2119 and other DTCs	B

HINT:

If any DTCs other than P2119 are output, troubleshoot those DTCs first.

B → GO TO DTC CHART

A

2	CHECK WHETHER DTC OUTPUT RECURS (DTC P2119)

(a) Connect the intelligent tester to the DLC3 (Procedure "A").
(b) Turn the ignition switch on (IG) (Procedure "B").
(c) Turn the tester on (Procedure "C").
(d) Clear DTCs (See page ES-44) (Procedure "D").
(e) Allow the engine to idle for 15 seconds (Procedure "E").

CAUTION:

Perform the procedures "F" and "G" below with great care. Failure to do so may result in the vehicle unexpectedly rolling away.

(f) Securely apply the parking brake and move the gear selector lever to the D position (Procedure "F").
(g) While depressing the brake pedal securely, fully depress the accelerator pedal for 5 seconds (Procedure "G").
(h) Select the following menu items on the tester: DIAGNOSIS / ENHANCED OBD II / DTC INFO / CURRENT CODES (Procedure "H").
(i) Read DTCs (Procedure "I").
HINT:
The voltage output of the throttle position sensor can be checked during procedure "G" using the intelligent tester. Variations in the voltage output indicate that the throttle actuator is in operation. To check the voltage output using the intelligent tester, select the following menu items: DIAGNOSIS / ENHANCED OBD II / DATA LIST / PRIMARY / THROTTLE POS #1.
OK:
No DTC output.

NG → **REPLACE THROTTLE WITH MOTOR BODY ASSEMBLY**

OK

NORMAL

DTC	P2120	Throttle / Pedal Position Sensor / Switch "D" Circuit
DTC	P2122	Throttle / Pedal Position Sensor / Switch "D" Circuit Low Input
DTC	P2123	Throttle / Pedal Position Sensor / Switch "D" Circuit High Input
DTC	P2125	Throttle / Pedal Position Sensor / Switch "E" Circuit
DTC	P2127	Throttle / Pedal Position Sensor / Switch "E" Circuit Low Input
DTC	P2128	Throttle / Pedal Position Sensor / Switch "E" Circuit High Input
DTC	P2138	Throttle / Pedal Position Sensor / Switch "D" / "E" Voltage Correlation

HINT:
These DTCs relate to the Accelerator Pedal Position (APP) sensor.

DESCRIPTION

HINT:
This ETCS (Electronic Throttle Control System) does not use a throttle cable.
The Accelerator Pedal Position (APP) sensor is integrated with the accelerator pedal bracket and has 2 sensor circuits: VPA (main) and VPA2 (sub). This sensor is a non-contact type, and uses Hall-effect elements, in order to yield accurate signals, even in extreme driving conditions, such as at high speeds as well as very low speeds. The voltage, which is applied to terminals VPA and VPA2 of the ECM, varies between 0 V and 5 V in proportion to the operating angle of the accelerator pedal (throttle valve). A signal from VPA indicates the actual accelerator pedal opening angle (throttle valve opening angle) and is used for engine control. A signal from VPA2 conveys the status of the VPA circuit and is used to check the APP sensor itself.
The ECM monitors the actual accelerator pedal opening angle (throttle valve opening angle) through the signals from VPA and VPA2, and controls the throttle actuator according to these signals.

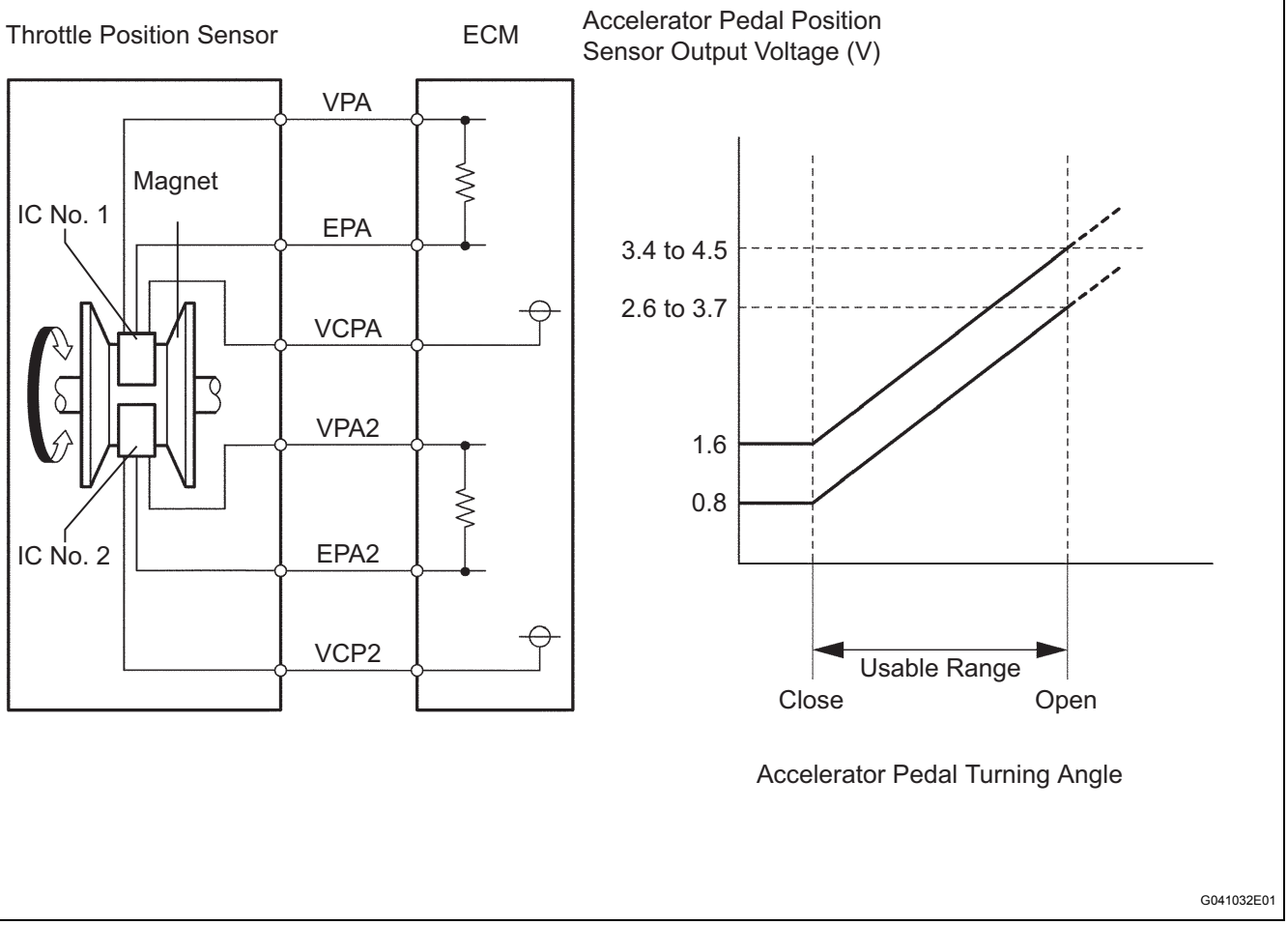

DTC No.	DTC Detection Conditions	Trouble Areas
P2120	VPA fluctuates rapidly beyond upper and lower malfunction thresholds for 0.5 seconds or more (1 trip detection logic)	• Accelerator Pedal Position (APP) sensor • ECM
P2122	VPA is 0.4 V or less for 0.5 seconds or more when accelerator pedal is fully released (1 trip detection logic)	• APP sensor • Open in VCP1 circuit • Open or ground short in VPA circuit • ECM
P2123	VPA is 4.8 V or more for 2.0 seconds or more (1 trip detection logic)	• APP sensor • Open in EPA circuit • ECM
P2125	VPA2 fluctuates rapidly beyond upper and lower malfunction thresholds for 0.5 seconds or more (1 trip detection logic)	• APP sensor • ECM
P2127	VPA2 is 1.2 V or less for 0.5 seconds or more when accelerator pedal is fully released (1 trip detection logic)	• APP sensor • Open in VCP2 circuit • Open or ground short in VPA2 circuit • ECM
P2128	Conditions (a) and (b) continue for 2.0 seconds or more (1 trip detection logic): (a) VPA2 is 4.8 V or more (b) VPA is between 0.4 V and 3.45 V	• APP sensor • Open in EPA2 circuit • ECM

DTC No.	DTC Detection Conditions	Trouble Areas
P2138	Condition (a) or (b) continues for 2.0 seconds or more (1 trip detection logic): (a) Difference between VPA and VPA2 is 0.02 V or less (b) VPA is 0.4 V or less and VPA2 is 1.2 V or less	• Short between VPA and VPA2 circuits • APP sensor • ECM

HINT:
When any of these DTCs are set, check the APP sensor voltage by selecting the following menu items on the intelligent tester: DIAGNOSIS / ENHANCED OBD II / DATA LIST / PRIMARY / ACCEL POS #1 and ACCEL POS #2.

Trouble Areas	ACCEL POS #1 When AP Released	ACCEL POS #2 When AP Released	ACCEL POS #1 When AP Depressed	ACCEL POS #2 When AP Depressed
VCP circuit open	0 to 0.2 V	0 to 0.2 V	0 to 0.2 V	0 to 0.2 V
Open or ground short in VPA circuit	0 to 0.2 V	1.2 to 2.0 V	0 to 0.2 V	3.4 to 5.0 V
Open or ground short in VPA2 circuit	0.5 to 1.1 V	0 to 0.2 V	2.6 to 4.5 V	0 to 0.2 V
EPA circuit open	4.5 to 5.0 V	4.5 to 5.0 V	4.5 to 5.0 V	4.5 to 5.0 V
Normal condition	0.5 to 1.1 V	1.2 to 2.0 V	2.6 to 4.5 V	3.4 to 5.0 V

HINT:
- Accelerator pedal positions are expressed as voltages.
- AP denotes for Accelerator Pedal.

MONITOR DESCRIPTION

When either of the voltage outputs of VPA or VPA2 deviates from the standard range, or the difference between the voltage outputs of the 2 sensor circuits is less than the threshold, the ECM determines that there is a malfunction in the APP sensor. The ECM then illuminates the MIL and sets a DTC.
Example:
When the voltage output of VPA drops below 0.4 V for more than 0.5 seconds when the accelerator pedal is fully depressed, DTC P2122 is set.
If the malfunction is not repaired successfully, a DTC is set 2 seconds after the engine is next started.

MONITOR STRATEGY

Related DTCs	P2120: Accelerator Pedal Position (APP) sensor 1 range check (fluctuating) P2122: APP sensor 1 range check (low voltage) P2123: APP sensor 1 range check (high voltage) P2125: APP sensor 2 range check (fluctuating) P2127: APP sensor 2 range check (low voltage) P2128: APP sensor 2 range check (high voltage) P2138: APP sensor range check (correlation)
Required Sensors / Components (Main)	APP sensor
Required Sensors / Components (Related)	-
Frequency of Operation	Continuous
Duration	0.5 seconds: P2120, P2122, P2125 and P2127 2.0 seconds: P2123, P2128 and P2138
MIL Operation	Immediate
Sequence of Operation	None

TYPICAL ENABLING CONDITIONS

The monitor will run whenever these DTCs are not present	None
Actuator	ON

TYPICAL MALFUNCTION THRESHOLDS

P2120:

Either of the following conditions is met	Condition A or B
A. VPA voltage when VPA2 is 0.04 V or more	0.4 V or less
B. VPA voltage	4.8 or more

P2122:

VPA voltage when VPA2 is 0.04 V or more	0.4 V or less

P2123:

VPA voltage	4.8 V or more

P2125:

Either of the following conditions is met	Condition A or B
A. VPA2 voltage when VPA is 0.04 V or more	1.2 V or less
B. VPA2 voltage when VPA is 0.4 to 3.45 V	4.8 V or more

P2127:

VPA2 voltage when VPA is 0.04 V or more	1.2 V or less

P2128:

VPA2 voltage when VPA is 0.4 to 3.45 V	4.8 V or more

P2138:

Either of following conditions met:	Condition A or B
Condition A	-
Difference between VPA and VPA 2 voltages	0.02 V or less
Condition B	-
VPA voltage	0.4 V or less
VPA2 voltage	1.2 V or less

COMPONENT OPERATING RANGE

Parameter	Standard Value
VPA voltage	0.4 V to 4.8 V
VPA2 voltage	1.2 V to 4.8 V
Difference between VPA and VPA2 voltages	More than 0.02 V

FAIL-SAFE

When any of DTCs P2120, P2121, P2122, P2123, P2125, P2127, P2128 and P2138 are set, the ECM enters fail-safe mode. If either of the 2 sensor circuits malfunctions, the ECM uses the remaining circuit to calculate the accelerator pedal position to allow the vehicle to continue driving. If both of the circuits malfunction, the ECM regards the accelerator pedal as being released. As a result, the throttle valve is closed and the engine idles.

Fail-safe mode continues until a pass condition is detected, and the ignition switch is turned off.

WIRING DIAGRAM

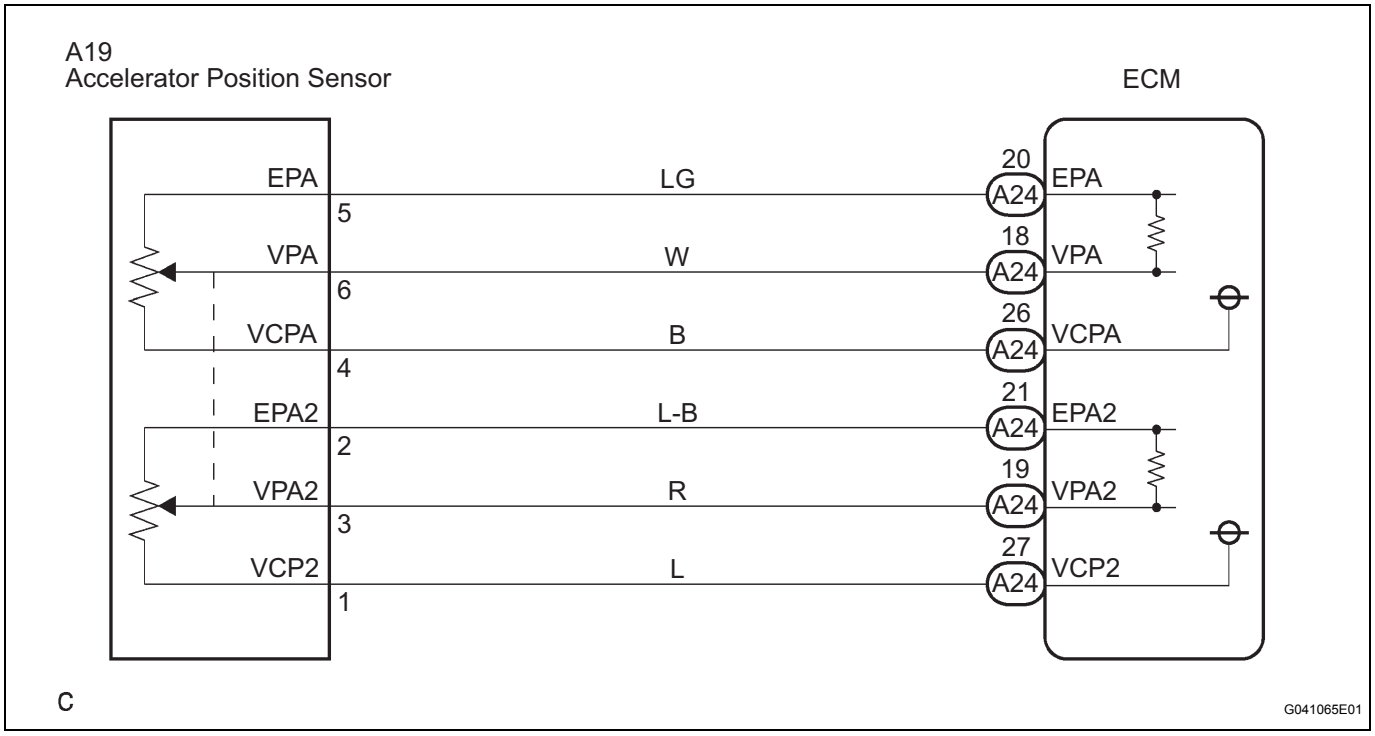

INSPECTION PROCEDURE

HINT:

Read freeze frame data using the intelligent tester. The ECM records vehicle and driving condition information as freeze frame data the moment a DTC is stored. When troubleshooting, freeze frame data can be helpful in determining whether the vehicle was running or stopped, whether the engine was warmed up or not, whether the air/fuel ratio was lean or rich, as well as other data recorded at the time of a malfunction.

1	READ VALUE OF INTELLIGENT TESTER (ACCEL POS #1 AND ACCEL POS #2)

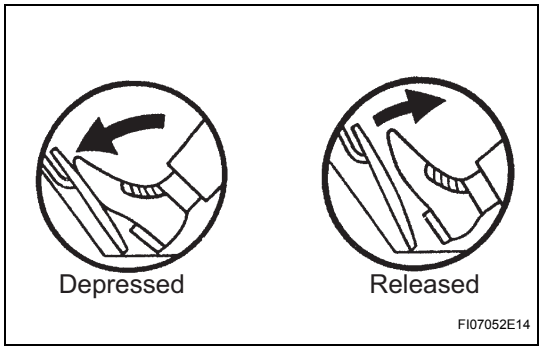

(a) Connect the intelligent tester to the DLC3.
(b) Turn the ignition switch on (IG) and turn the tester ON.
(c) Select the following menu items: DIAGNOSIS / ENHANCED OBD II / DATA LIST / ALL / ACCEL POS #1 and ACCEL POS #2.
(d) Read the values displayed on the tester.

Standard voltage

Accelerator Pedal Operations	ACCEL POS #1 (AP#1)	ACCEL POS #2 (AP#2)
Released	0.5 to 1.1 V	1.2 to 2.0 V
Depressed	2.6 to 4.5 V	3.4 to 5.0 V

OK → **Go to step 5**

NG

2	CHECK HARNESS AND CONNECTOR (ACCELERATOR PEDAL POSITION SENSOR - ECM)

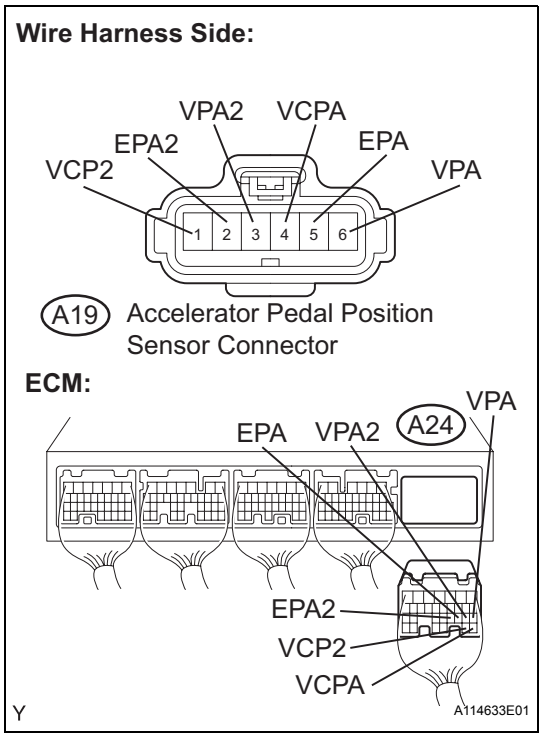

(a) Disconnect the A19 Accelerator Pedal Position (APP) sensor connector.
(b) Disconnect the A24 ECM connector.
(c) Measure the resistance.

Standard resistance (Check for open)

Tester Connections	Specified Conditions
VPA (A19-6) - VPA (A24-18)	Below 1 Ω
EPA (A19-5) - EPA (A24-20)	Below 1 Ω
VCPA (A19-4) - VCPA (A24-26)	Below 1 Ω
VPA2 (A19-3) - VPA2 (A24-19)	Below 1 Ω
EPA2 (A19-2) - EPA2 (A24-21)	Below 1 Ω
VCP2 (A19-1) - VCP2 (A24-27)	Below 1 Ω

Standard resistance (Check for short)

Tester Connections	Specified Conditions
VPA (A19-6) or VPA (A24-18) - Body ground	10 kΩ or higher
EPA (A19-5) or EPA (A24-20) - Body ground	10 kΩ or higher
VCPA (A19-4) or VCPA (A24-26) - Body ground	10 kΩ or higher
VPA2 (A19-3) or VPA2 (A24-19) - Body ground	10 kΩ or higher
EPA2 (A19-2) or EPA2 (A24-21) - Body ground	10 kΩ or higher
VCP2 (A19-1) or VCP2 (A24-27) - Body ground	10 kΩ or higher

(d) Reconnect the APP sensor connector.
(e) Reconnect the ECM connector.

NG → **REPAIR OR REPLACE HARNESS OR CONNECTOR**

OK

3	INSPECT ECM (VCPA AND VCP2 VOLTAGE)

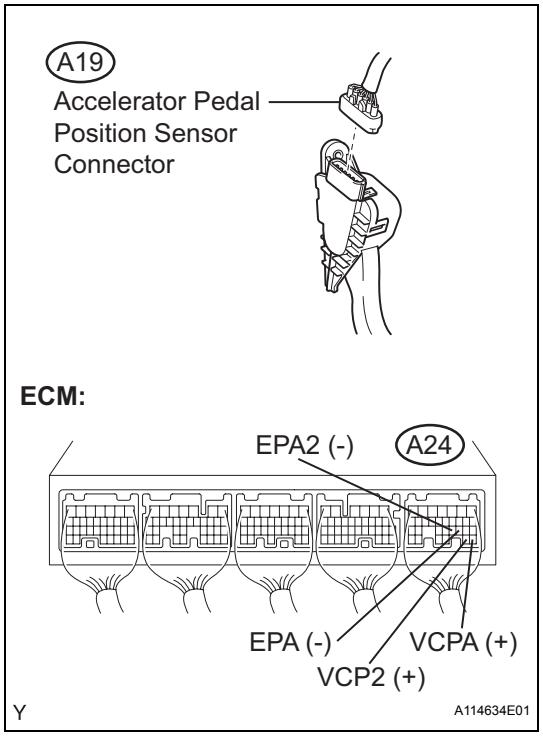

(a) Disconnect the A19 APP sensor connector.
(b) Turn the ignition switch on (IG).
(c) Measure the voltage between the terminals of the A24 ECM connector.

Standard voltage

Tester Connections	Specified Conditions
VCPA (A24-26) - EPA (A24-20)	4.5 to 5.0 V
VCP2 (A24-27) - EPA2 (A24-21)	4.5 to 5.0 V

(d) Reconnect the APP sensor connector.

ES

NG → REPLACE ECM

OK

4	REPLACE ACCELERATOR PEDAL

(a) Replace the accelerator pedal (See page ES-448).

NEXT

5	CHECK WHETHER DTC OUTPUT RECURS (ACCELERATOR PEDAL POSITION SENSOR DTCS)

(a) Connect the intelligent tester to the DLC3.
(b) Turn the ignition switch on (IG) and turn the tester on.
(c) Clear DTCs (See page ES-44).
(d) Start the engine.
(e) Allow the engine to idle for 15 seconds.
(f) Select the following menu items on the tester: DIAGNOSIS / ENHANCED OBD II / DTC INFO / CURRENT CODES.
(g) Read DTCs.

Result

Display (DTC Output)	Proceed to
P2120, P2122, P2123, P2125, P2127, P2128 and/or P2138	A
No output	B

B → SYSTEM OK

A

REPLACE ECM

DTC	P2121	Throttle / Pedal Position Sensor / Switch "D" Circuit Range / Performance

HINT:
This DTC relates to the Accelerator Pedal Position (APP) sensor.

DESCRIPTION

Refer to DTC P2120 (See page ES-301).

DTC No.	DTC Detection Conditions	Trouble Areas
P2121	Difference between VPA and VPA2 is less than 0.4 V, or more than 1.2 V for 0.5 second (1 trip detection logic)	• Accelerator position (APP) sensor • ECM

ES

MONITOR DESCRIPTION

The accelerator pedal position sensor is mounted on the accelerator pedal bracket. The accelerator pedal position sensor has 2 sensor elements and 2 signal outputs: VPA and VPA2. VPA is used to detect the actual accelerator pedal angle (used for engine control) and VPA2 is used to detect malfunctions in VPA. When the difference between the voltage outputs of VPA and VPA2 deviates from the standard, the ECM determines that the accelerator pedal position sensor is a malfunctioning. The ECM turns on the MIL and the DTC is set.

MONITOR STRATEGY

Related DTCs	P2121: Accelerator pedal position (APP) sensor rationality
Required Sensors / Components (Main)	APP sensor
Required Sensors / Components (Related)	-
Frequency of Operation	Continuous
Duration	0.5 seconds
MIL Operation	Immediate
Sequence of Operation	None

TYPICAL ENABLING CONDITIONS

The monitor will run whenever these DTCs are not present	None
Either of the following conditions is met.	Condition 1 or 2
1. Ignition switch	ON
2. Electronic throttle actuator power	ON

TYPICAL MALFUNCTION THRESHOLDS

Difference between VPA1 voltage (learned value) and VPA2 voltage (learned value)	Less than 0.4 V, or more than 1.2 V

FAIL-SAFE

The accelerator pedal position sensor has 2 (main and sub) sensor circuits. If a malfunction occurs in either of the sensor circuits, the ECM detects the abnormal signal voltage difference between the 2 sensor circuits and switches to limp mode. In limp mode, the functioning circuit is used to calculate the accelerator pedal opening angle to allow the vehicle to continue driving. If both circuits malfunction, the ECM regards the opening angle of the accelerator pedal as being fully closed. In this case, the throttle valve remains closed as if the engine is idling.

If a pass condition is detected and then the ignition switch is turned off, the fail-safe operation stops and the system returns to a normal condition.

WIRING DIAGRAM

Refer to DTC P2120 (See page ES-305).

INSPECTION PROCEDURE

HINT:

Read freeze frame data using the intelligent tester. The ECM records vehicle and driving condition information as freeze frame data the moment a DTC is stored. When troubleshooting, freeze frame data can be helpful in determining whether the vehicle was running or stopped, whether the engine was warmed up or not, whether the air/fuel ratio was lean or rich, as well as other data recorded at the time of a malfunction.

ES

1	READ VALUE OF INTELLIGENT TESTER (ACCEL POS #1 AND ACCEL POS #2)

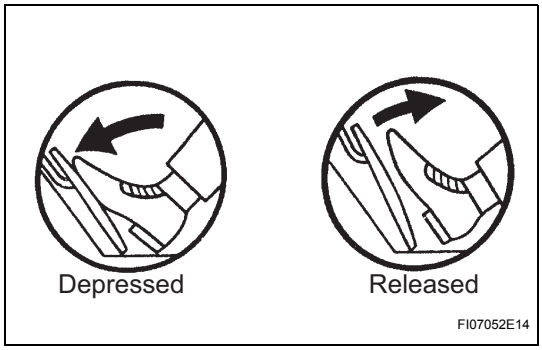

(a) Connect the intelligent tester to the DLC3.
(b) Turn the ignition switch on (IG) and turn the tester on.
(c) Select the following menu items: DIAGNOSIS / ENHANCED OBD II / DATA LIST / ALL / ACCEL POS #1 and ACCEL POS #2.
(d) Read the values displayed on the tester.

Standard voltage

Accelerator Pedal Operations	ACCEL POS #1 (AP#1)	ACCEL POS #2 (AP#2)
Released	0.5 to 1.1 V	1.2 to 2.0 V
Depressed	2.6 to 4.5 V	3.4 to 5.0 V

OK → Go to step 4

NG

2	CHECK HARNESS AND CONNECTOR (ACCELERATOR PEDAL POSITION SENSOR - ECM)

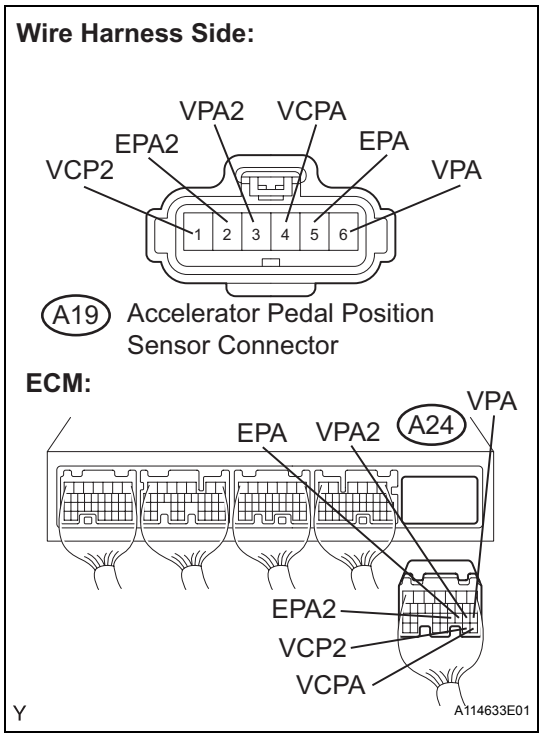

(a) Disconnect the A19 Accelerator Pedal Position (APP) sensor connector.
(b) Disconnect the A24 ECM connector.
(c) Measure the resistance.

Standard resistance (Check for open)

Tester Connections	Specified Conditions
VPA (A19-6) - VPA (A24-18)	Below 1 Ω
EPA (A19-5) - EPA (A24-20)	Below 1 Ω
VCPA (A19-4) - VCPA (A24-26)	Below 1 Ω
VPA2 (A19-3) - VPA2 (A24-19)	Below 1 Ω
EPA2 (A19-2) - EPA2 (A24-21)	Below 1 Ω
VCP2 (A19-1) - VCP2 (A24-27)	Below 1 Ω

Standard resistance (Check for short)

Tester Connections	Specified Conditions
VPA (A19-6) or VPA (A24-18) - Body ground	10 kΩ or higher
EPA (A19-5) or EPA (A24-20) - Body ground	10 kΩ or higher
VCPA (A19-4) or VCPA (A24-26) - Body ground	10 kΩ or higher
VPA2 (A19-3) or VPA2 (A24-19) - Body ground	10 kΩ or higher
EPA2 (A19-2) or EPA2 (A24-21) - Body ground	10 kΩ or higher
VCP2 (A19-1) or VCP2 (A24-27) - Body ground	10 kΩ or higher

(d) Reconnect the APP sensor connector.
(e) Reconnect the ECM connector.

NG → **REPAIR OR REPLACE HARNESS OR CONNECTOR**

OK

3	REPLACE ACCELERATOR PEDAL

(a) Replace the accelerator pedal (See page ES-448).

NEXT

4	CHECK WHETHER DTC OUTPUT RECURS (ACCELERATOR PEDAL POSITION SENSOR DTCS)

(a) Connect the intelligent tester to the DLC3.
(b) Turn the ignition switch on (IG) and turn the tester on.
(c) Clear DTCs (See page ES-44).
(d) Start the engine.
(e) Allow the engine to idle for 15 seconds.
(f) Select the following menu items on the tester: DIAGNOSIS / ENHANCED OBD II / DTC INFO / CURRENT CODES.
(g) Read DTCs.

ES

Result

Display (DTC Output)	Proceed to
P2121	A
No output	B

B → **SYSTEM OK**

A

REPLACE ECM

DTC	P2195	Oxygen (A/F) Sensor Signal Stuck Lean (Bank 1 Sensor 1)
DTC	P2196	Oxygen (A/F) Sensor Signal Stuck Rich (Bank 1 Sensor 1)
DTC	P2197	Oxygen (A/F) Sensor Signal Stuck Lean (Bank 2 Sensor 1)
DTC	P2198	Oxygen (A/F) Sensor Signal Stuck Rich (Bank 2 Sensor 1)

ES

HINT:
- Although the DTC titles say oxygen sensor, these DTCs relate to the Air-Fuel Ratio (A/F) sensor.
- Sensor 1 refers to the sensor mounted in front of the Three-Way Catalytic Converter (TWC) and located near the engine assembly.

DESCRIPTION

The A/F sensor generates a voltage* that corresponds to the actual air-fuel ratio. This sensor voltage is used to provide the ECM with feedback so that it can control the air-fuel ratio. The ECM determines the deviation from the stoichiometric air-fuel ratio level, and regulates the fuel injection time. If the A/F sensor malfunctions, the ECM is unable to control the air-fuel ratio accurately.

The A/F sensor is the planar type and is integrated with the heater, which heats the solid electrolyte (zirconia element). This heater is controlled by the ECM. When the intake air volume is low (the exhaust gas temperature is low), a current flows into the heater to heat the sensor, in order to facilitate accurate oxygen concentration detection. In addition, the sensor and heater portions are narrower than the conventional type. The heat generated by the heater is conducted to the solid electrolyte though the alumina, therefore the sensor activation is accelerated.

In order to obtain a high purification rate of the carbon monoxide (CO), hydrocarbon (HC) and nitrogen oxide (NOx) components in the exhaust gas, a TWC is used. For the most efficient use of the TWC, the air-fuel ratio must be precisely controlled so that it is always close to the stoichiometric level.

*: Value changes inside the ECM. Since the A/F sensor is the current output element, a current is converted to a voltage inside the ECM. Any measurements taken at the A/F sensor or ECM connectors will show a constant voltage.

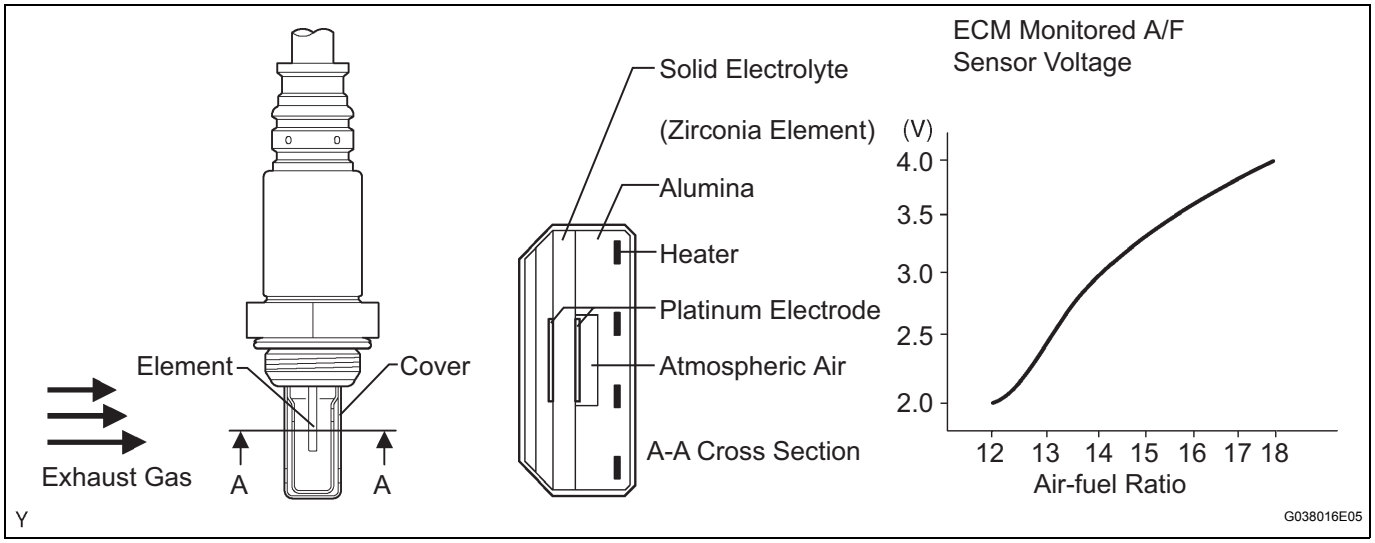

DTC No.	DTC Detection Conditions	Trouble Areas
P2195 P2197	Conditions (a) and (b) continue for 2 seconds or more (2 trip detection logic): (a) Air-Fuel Ratio (A/F) sensor voltage is more than 3.8 V (b) Heated Oxygen (HO2) sensor voltage is 0.15 V or more	• Open or short in A/F sensor (bank 1, 2 sensor 1) circuit • A/F sensor (bank 1, 2 sensor 1) • A/F sensor (bank 1, 2 sensor 1) heater • A/F sensor heater relay • A/F sensor heater and relay circuits • Air induction system • Fuel pressure • Injector • ECM
P2195 P2197	While fuel-cut operation is performed (during vehicle deceleration), air-furl ratio (A/F) sensor current is 3.6 mA or more for 3 seconds (2 trip detection logic)	• A/F sensor • ECM
P2196 P2198	Conditions (a) and (b) continue for 2 seconds or more (2 trip detection logic): (a) A/F sensor voltage is less than 2.8 V (b) HO2 sensor voltage is less than 0.6 V	• Open or short in A/F sensor (bank 1, 2 sensor 1) circuit • A/F sensor (bank 1, 2 sensor 1) • A/F sensor (bank 1, 2 sensor 1) heater • A/F sensor heater relay • A/F sensor heater and relay circuits • Air induction system • Fuel pressure • Injector • ECM
P2196 P2198	While fuel-cut operation is performed (during vehicle deceleration), air-furl ratio (A/F) sensor current is less than 1.4 mA for 3 seconds (2 trip detection logic)	• A/F sensor • ECM

ES

HINT:
- DTCs P2195 and P2196 indicate malfunctions related to bank 1 A/F sensor circuit.
- DTCs P2197 and P2198 indicate malfunctions related to bank 2 A/F sensor circuit.
- Bank 1 refers to the bank that includes cylinder No. 1.
- Bank 2 refers to the bank that includes cylinder No. 2.
- When any of these DTCs are set, check the A/F sensor voltage output by selecting the following menu items on the intelligent tester: DIAGNOSIS / ENHANCED OBDII / DATA LIST / PRIMARY / AFS B1S1.
- Short-term fuel trim values can also be read using the intelligent tester.
- The ECM regulates the voltages at the A1A+, A2A+, A1A- and A2A- terminals of the ECM to a constant level. Therefore, the A/F sensor voltage output cannot be confirmed without using the intelligent tester.
- If a A/F sensor malfunction is detected, the ECM sets a DTC.

MONITOR DESCRIPTION

Sensor voltage detection monitor

Under the air-fuel ratio feedback control, if the A/F sensor voltage output indicates rich or lean for a certain period of time, the ECM determines that there is a malfunction in the A/F sensor. The ECM illuminates the MIL and sets a DTC.

Example:

If the A/F sensor voltage output is less than 2.8 V (very rich condition) for 10 seconds, despite the HO2 sensor voltage output being less than 0.6 V, the ECM sets DTC P2196. Alternatively, if the A/F sensor voltage output is more than 3.8 V (very lean condition) for 10 seconds, despite the HO2 sensor voltage output being 0.15 V or more, DTC P2195 is set.

Sensor current detection monitor

A rich air-fuel mixture causes a low A/F sensor current, and a lean air-fuel mixture causes a high A/F sensor current. Therefore, the sensor output becomes low during acceleration, and it becomes high during deceleration with the throttle valve fully closed. The ECM monitors the A/F sensor current during fuel-cut and detects any abnormal current values.

If the A/F sensor output is 3.6 mA or more for more than 3 seconds of cumulative time, the ECM interprets this as a malfunction in the A/F sensor and sets DTC P2195 (high-side stuck). If the A/F sensor output is 1.0 mA or less for more than 3 seconds of cumulative time, the ECM sets DTC P2196 (low-side stuck).

Air-fuel Ratio Sensor Current Monitor: Cumulative Time “t” = t1 + t2 = 3 seconds or more

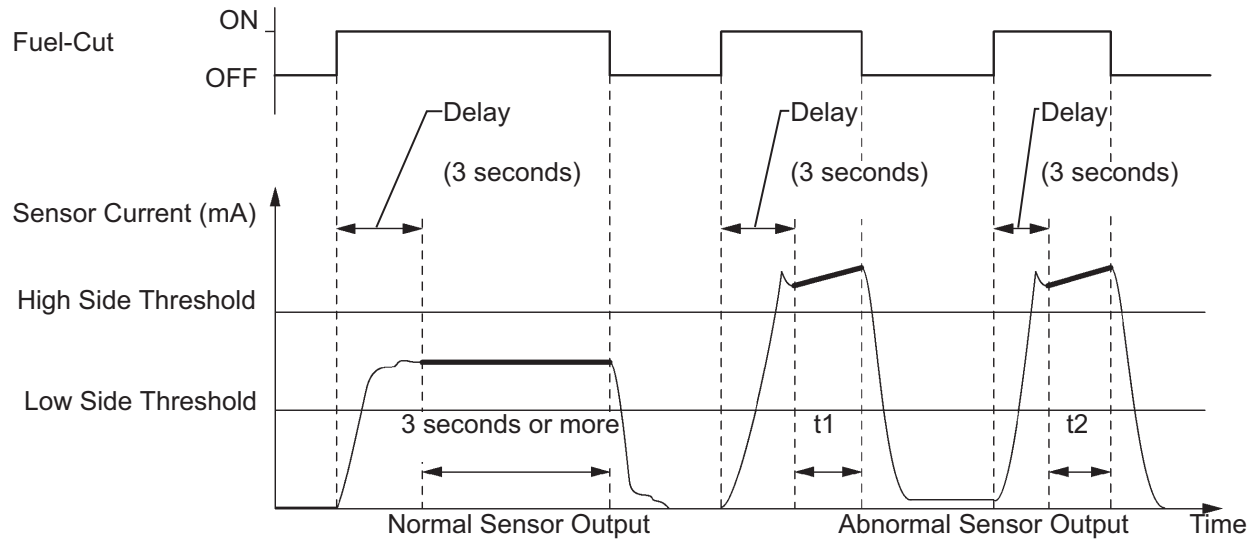

MONITOR STRATEGY

Related DTCs	P2195: A/F sensor (Bank 1) signal stuck lean P2196: A/F sensor (Bank 1) signal stuck rich P2197: A/F sensor (Bank 2) signal stuck lean P2198: A/F sensor (Bank 2) signal stuck rich
Required Sensors / Components (Main)	A/F sensor
Required Sensors / Components (Related)	HO2 sensor
Frequency of Operation	Continuous
Duration	Sensor voltage detection monitor: 10 seconds Sensor current detection monitor: 3 seconds
MIL Operation	2 driving cycles
Sequence of Operation	None

TYPICAL ENABLING CONDITIONS

All:

The monitor will run whenever these DTCs are not present	P0031, P0032, P0051, P0052 (A/F Sensor heater Sensor 1), P0037, P0038 (O2 Sensor heater Sensor 2), P0100, P0101, P0102, P0103 (MAF Sensor), P0110, P0112, P0113 (IAT Sensor), P0115, P0116, P0117, P0118 (ECT Sensor), P0120, P0121, P0122, P0220, P0222, P0223 (TP Sensor), P0125 (Insufficient ECT for Closed Loop), P0136, P0156 (O2 Sensor 2), P0171, P0172 (Fuel System), P0300, P0301, P0302, P0303, P0304, P0305, P0306 (Misfire), P0335 (CKP Sensor), P0340 (VVT Sensor 1, 2), P0450, P0451, P0452, P0453 (EVAP System), P0500 (VSS)

Sensor voltage detection monitor (Lean side malfunction P2195, P2197):

Duration while all of following conditions are met	2 seconds or more
Rear HO2 sensor voltage	0.15 V or more
Time after engine start	30 seconds or more
A/F sensor status	Activated
Fuel system status	Closed-loop
Engine	Running

Sensor voltage detection monitor (Rich side malfunction P2196, P2198):

Duration while all of following conditions are met	2 seconds or more
Rear HO2 sensor voltage	Below 0.6 V
Time after engine start	30 seconds or more
A/F sensor status	Activated
Fuel system status	Closed-loop
Engine	Running

Sensor Current detection monitor P2195, P2196, P2197 P2198

Battery voltage	11 V or more
Atmospheric pressure	0.75 or more
Air-fuel ratio sensor status	Activated
Engine coolant temperature	75°C (167°F) or more
Continuous time of fuel-cut	3 to 10 seconds

ES

TYPICAL MALFUNCTION THRESHOLDS

Sensor voltage detection monitor (Lean side malfunction P2195, P2197):

A/F sensor voltage	More than 3.8 V

Sensor voltage detection monitor (Rich side malfunction P2196, P2198):

A/F sensor voltage	Less than 2.8 V

Sensor current detection monitor (High side malfunction P2195, P2197):

Air-fuel ratio sensor current during fuel cut	3.6 mA or more

Sensor current detection monitor (Rich side malfunction P2196, P2198):

Air-fuel ratio sensor current during fuel cut	Less than 1.57 mA

MONITOR RESULT

Refer to Checking Monitor Status for detailed information (See page ES-25).

Air-fuel ratio sensor current

MID	TID	Scaling	Description of Test Value	Minimum Test Limit	Maximum Test Limit
$01	$91	Multiply by 0.003 [mA]	Air-fuel ratio sensor current for bank 1 sensor 1	Malfunction criterion for low side rationality	Malfunction criterion for high side rationality

WIRING DIAGRAM

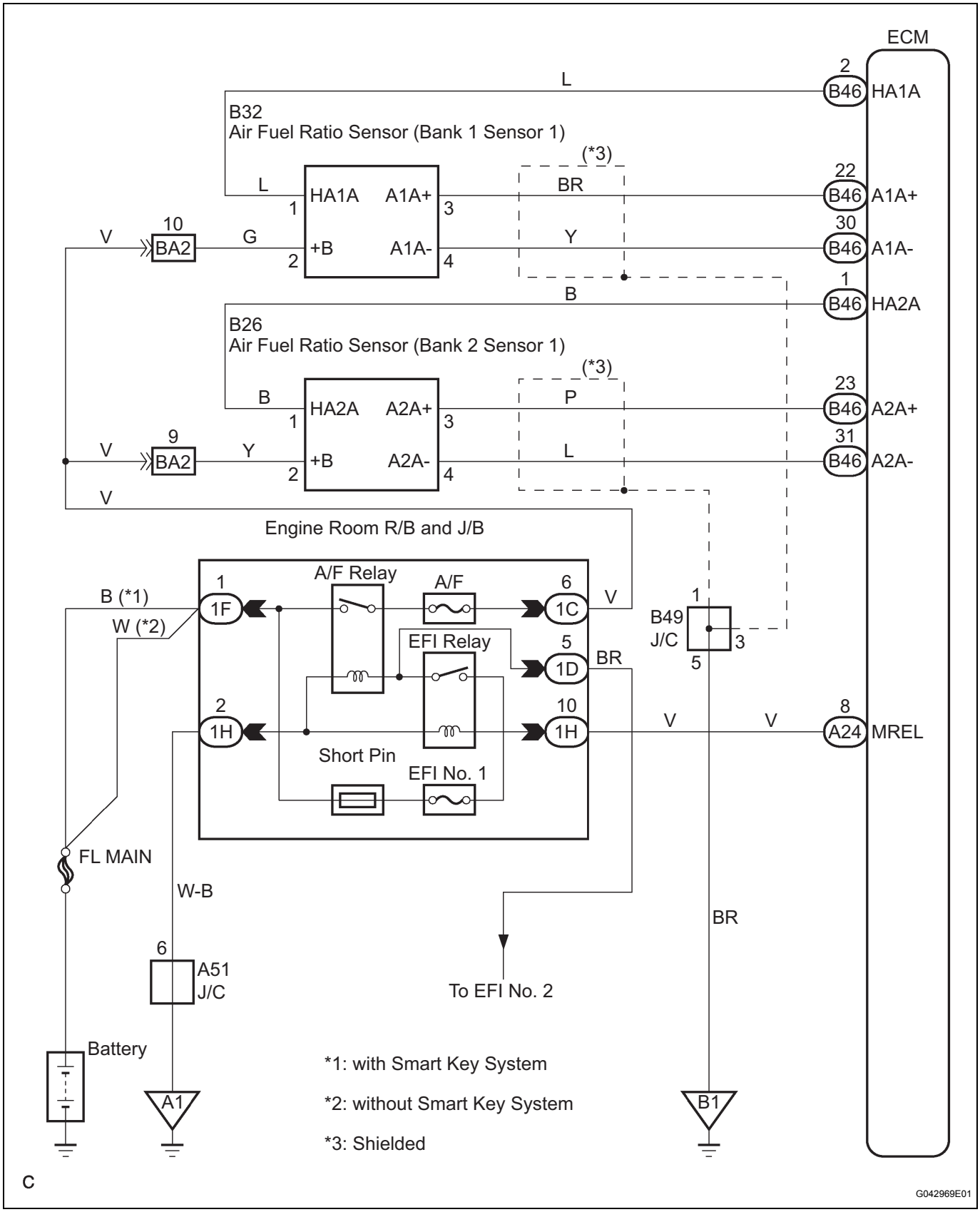

CONFIRMATION DRIVING PATTERN

This confirmation driving pattern is used in steps 4, 7, 17, and 21 of the following diagnostic troubleshooting procedure when using the intelligent tester.

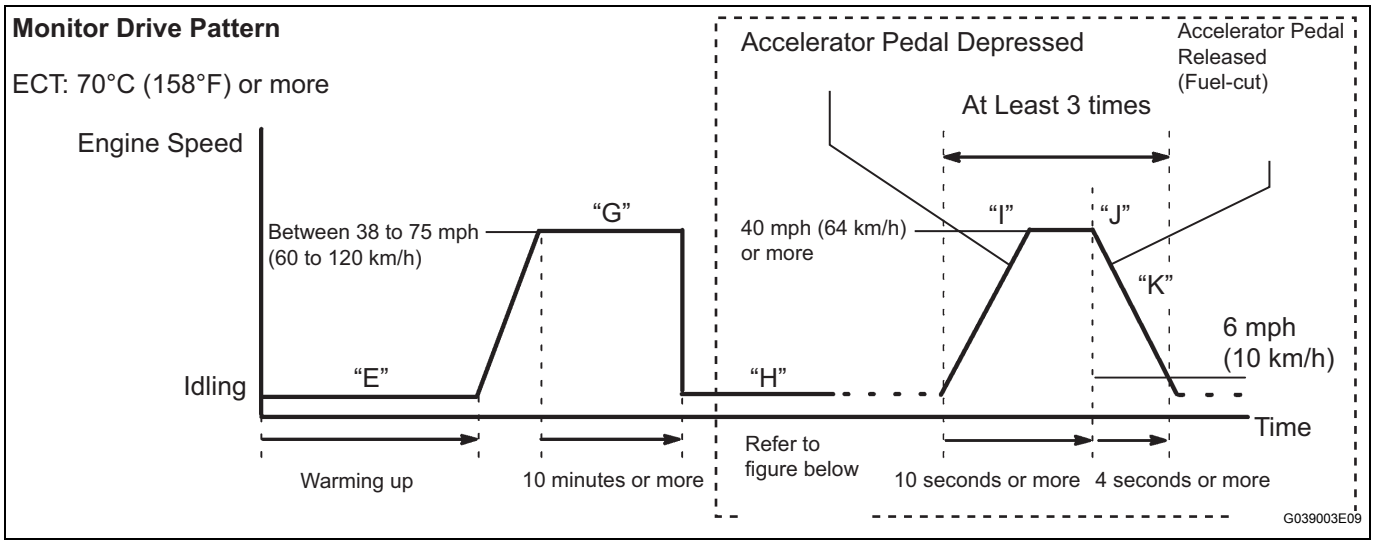

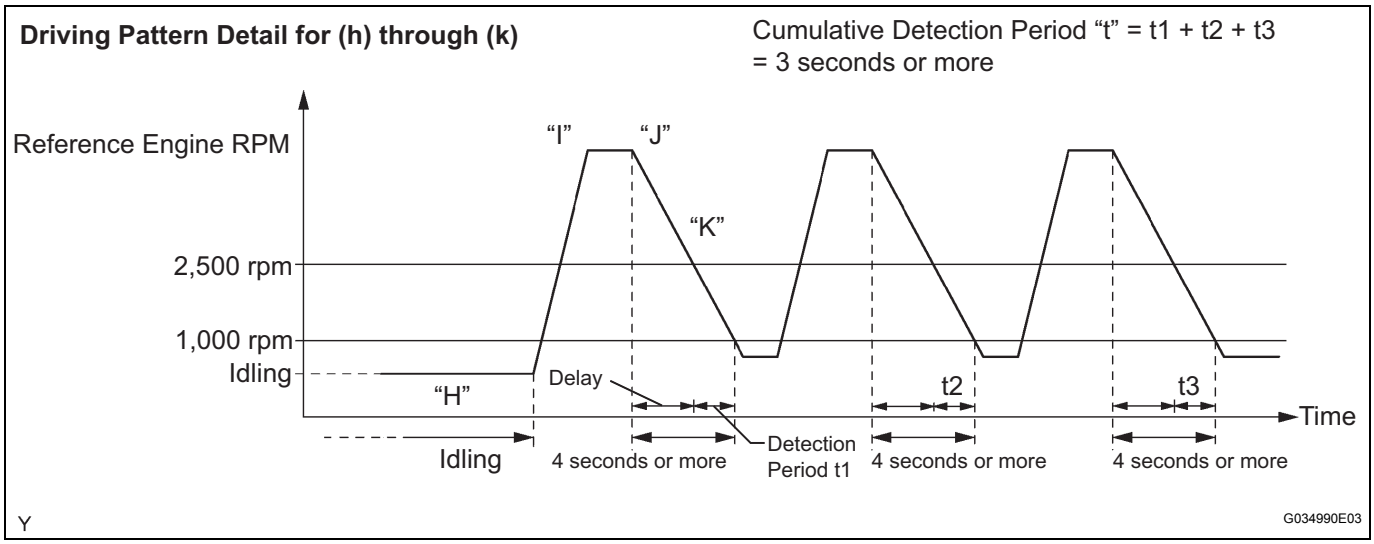

1. Connect the intelligent tester to the DLC3 (Procedure "A").
2. Turn the ignition switch on (IG) (Procedure "B").
3. Turn the tester on (Procedure "C").
4. Clear DTCs (See page ES-44) (Procedure "D").
5. Start the engine, and warm it up until the ECT reaches 70°C (158°F) or higher (Procedure "E").
6. Select the following menu items on the tester to check the fuel-cut status: DIAGNOSIS / ENHANCED OBD II / DATA LIST / USER DATA / FC IDLE (Procedure "F").
7. Drive the vehicle at between 38 mph (60 km/h) and 75 mph (120 km/h) for at least 10 minutes (Procedure "G").
8. Change the transmission to 2nd gear (Procedure "H").
9. Drive the vehicle at proper vehicle speed to perform fuel-cut operation (refer to the following HINT) (Procedure "I").
   HINT:
   Fuel-cut is performed when the following conditions are met:
   - Accelerator pedal is fully released.
   - Engine speed is 2,500 rpm or more (fuel injection returns at 1,000 rpm).
10. Accelerate the vehicle to 40 mph (64 km/h) or more by depressing the accelerator pedal for at least 10 seconds (Procedure "J").
11. Soon after performing procedure "J" on the previous page, release the accelerator pedal for at least 4 seconds without depressing the brake pedal, in order to execute fuel-cut control (Procedure "K").
12. Allow the vehicle to decelerate until the vehicle speed declines to less than 6 mph (10 km/h) (Procedure "L").

13.Repeat procedures from "H" through "K" in this section at least 3 times per driving cycle (Procedure "M").
HINT:
Completion of all A/F sensor monitors is required to change the value in TEST RESULT.
CAUTION:
Strictly observe posted speed limits, traffic laws, and road conditions when performing these drive patterns.

INSPECTION PROCEDURE

HINT:
Malfunctioning areas can be identified by performing the A/F CONTROL function provided in the ACTIVE TEST. The A/F CONTROL function can help to determine whether the Air-Fuel Ratio (A/F) sensor, Heated Oxygen (HO2) sensor and other potential trouble areas are malfunctioning.
The following instructions describe how to conduct the A/F CONTROL operation using an intelligent tester.

(a)Connect the intelligent tester to the DLC3.
(b)Start the engine and turn the tester on.
(c)Warm up the engine at an engine speed of 2,500 rpm for approximately 90 seconds.
(d)Select the following menu items on the tester: DIAGNOSIS / ENHANCED OBD II / ACTIVE TEST / A/F CONTROL.
(e)Perform the A/F CONTROL operation with the engine in an idling condition (press the RIGHT or LEFT button to change the fuel injection volume).
(f) Monitor the voltage outputs of the A/F and HO2 sensors (AFS B1S1 and O2S B1S2 or AFS B2S1 and O2S B2S2) displayed on the tester.
HINT:
- The A/F CONTROL operation lowers the fuel injection volume by 12.5% or increases the injection volume by 25%.
- Each sensor reacts in accordance with increases and decreases in the fuel injection volume.

Standard voltage

Tester Display (Sensor)	Injection Volumes	Status	Voltages
AFS B1S1 or AFS B2S1 (A/F)	+25%	Rich	Less than 3.0
AFS B1S1 or AFS B2S1 (A/F)	-12.5%	Lean	More than 3.35
O2S B1S2 or O2S B2S2 (HO2)	+25%	Rich	More than 0.55
O2S B1S2 or O2S B2S2 (HO2)	-12.5%	Lean	Less than 0.4

NOTICE:
The Air-Fuel Ratio (A/F) sensor has an output delay of a few seconds and the Heated Oxygen (HO2) sensor has a maximum output delay of approximately 20 seconds.

Case	A/F Sensor (Sensor 1) Output Voltage		HO2 Sensor (Sensor 2) Output Voltage		Main Suspected Trouble Area
1	Injection Volume +25% -12.5%		Injection Volume +25% -12.5%		-
	Output Voltage More than 3.35 V Less than 3.0 V		Output Voltage More than 0.55 V Less than 0.4 V		
2	Injection Volume +25% -12.5%		Injection Volume +25% -12.5%		• A/F sensor • A/F sensor heater • A/F sensor circuit
	Output Voltage Almost no reaction		Output Voltage More than 0.55 V Less than 0.4 V		

Case	A/F Sensor (Sensor 1) Output Voltage		HO2 Sensor (Sensor 2) Output Voltage		Main Suspected Trouble Area
3	Injection Volume +25% -12.5%		Injection Volume +25% -12.5%		• HO2 sensor • HO2 sensor heater • HO2 sensor circuit
	Output Voltage More than 3.35 V Less than 3.0 V		Output Voltage Almost no reaction		
4	Injection volume +25% -12.5%		Injection Volume +25% -12.5%		• Injector • Fuel pressure • Gas leakage from exhaust system (Air-fuel ratio extremely lean or rich)
	Output Voltage Almost no reaction		Output Voltage Almost no reaction		

ES

– Following the A/F CONTROL procedure enables technicians to check the graph of the voltage outputs of both the A/F and HO2 sensors.
– To display the graph, select the following menu items on the tester: DIAGNOSIS / ENHANCED OBD II / ACTIVE TEST / A/F CONTROL / USER DATA / AFS B1S1 and O2S B1S2 or AFS B2S1 and O2S B2S2. Press the YES button and then the ENTER button. Then press the F4 button.
  HINT:
  - Read freeze frame data using the intelligent tester. The ECM records vehicle and driving condition information as freeze frame data the moment a DTC is stored. When troubleshooting, freeze frame data can be helpful in determining whether the vehicle was running or stopped, whether the engine was warmed up or not, whether the air/fuel ratio was lean or rich, as well as other data recorded at the time of a malfunction.
  - A low A/F sensor voltage could be caused by a rich air-fuel mixture. Check for conditions that would cause the engine to run rich.
  - A high A/F sensor voltage could be caused by a lean air-fuel mixture. Check for conditions that would cause the engine to run lean.

1	CHECK ANY OTHER DTCS OUTPUT (IN ADDITION TO P2195, P2196, P2197 OR P2198)

(a) Connect the intelligent tester to the DLC3.
(b) Turn the ignition switch on (IG).
(c) Turn the tester on.
(d) Select the following menu items: DIAGNOSIS / ENHANCED OBD II / DTC INFO / CURRENT CODES.
(e) Read DTCs.

Result

Display (DTC Output)	Proceed to
P2195, P2196, P2197 or P2198	A
P2195, P2196, P2197 or P2198 and other DTCs	B

HINT:
If any DTCs other than P2195, P2196, P2197 or P2198 are output, troubleshoot those DTCs first.

B → DTC CAUSED BY RUNNING OUT OF FUEL

A

2	READ VALUE OF INTELLIGENT TESTER (TEST VALUE OF A/F SENSOR)

(a) Connect the intelligent tester to the DLC3.
(b) Turn the ignition switch on (IG) and turn the tester ON.
(c) Clear DTCs (See page ES-44).
(d) Allow the vehicle to drive in accordance with the drive pattern described in the CONFIRMATION DRIVING PATTERN.
(e) Select the following menu items on the tester: DIAGNOSIS / ENHANCED OBD II / MONITOR INFO / MONITOR STATUS.
(f) Check that the status of O2S MON is COMPL.
If the status is still INCMPL, drive the vehicle according to the driving pattern again.
HINT:
- AVAIL indicates that the component has not been monitored yet.
- COMPL indicates that the component is functioning normally.
- INCMPL indicates that the component is malfunctioning.

(g) Select the following menu items: DIAGNOSIS / ENHANCED OBD II / MONITOR INFO / TEST RESULT / RANGE B1S1, then press the ENTER button.
(h) Check the test value of the A/F sensor output current during fuel-cut.

Result

Test Value	Proceed to
Within normal range (1.4 mA or more, and less than 3.6 mA)	A
Outside normal range (Less than 1.4 mA, or 3.6 mA or more)	B

B → Go to step 20

A

3	READ VALUE OF INTELLIGENT TESTER (OUTPUT VOLTAGE OF A/F SENSOR)

(a) Connect the intelligent tester to the DLC3.
(b) Start the engine.
(c) Turn the tester on.
(d) Warm up the Air-Fuel Ratio (A/F) sensor at an engine speed of 2,500 rpm for 90 seconds.
(e) Select the following menu items on the tester: DIAGNOSIS / ENHANCED OBD II / SNAPSHOT / MANUAL SNAPSHOT / USER DATA / AFS B1S1 or AFS B2S1 and ENGINE SPD.
(f) Check the A/F sensor voltage 3 times, when the engine is in each of the following conditions:
(1) While idling (check for at least 30 seconds) (Step (1))

(2) At an engine speed of approximately 2,500 rpm (without any sudden changes in engine speed) (Step (2))
(3) Raise the engine speed to 4,000 rpm and then quickly release the accelerator pedal so that the throttle valve is fully closed (Step (3)).

Standard voltage

Conditions	A/F Sensor Voltage Variations	Reference
Steps (1) and (2)	Changes at approximately 3.3 V	Between 3.1 V and 3.5 V
Step (3)	Increases to 3.8 V or more	This occurs during engine deceleration (when fuel-cut performed)

ES

HINT:
For more information, see the diagrams below.

Normal Conditon:

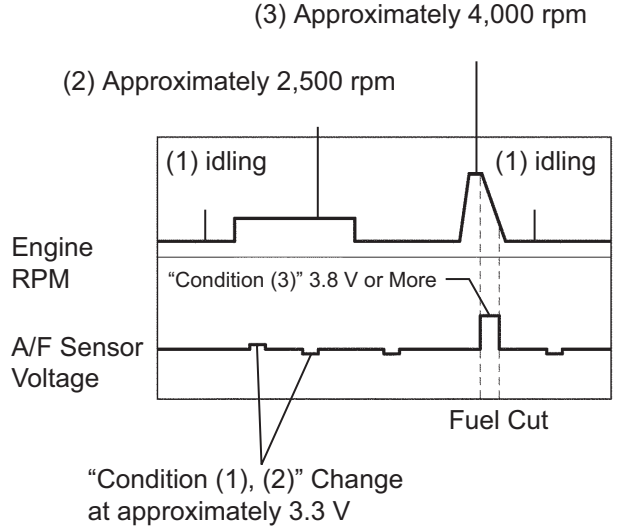

( ): Step No.

Malfunction Conditon:

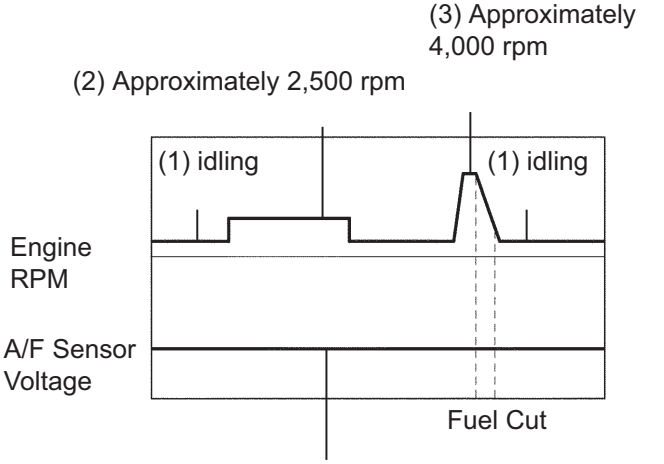

( ): Step No.

A072304E14

HINT:
- If the output voltage of the A/F sensor remains at approximately 3.3 V (see Malfunction Condition diagram) under any conditions, including those described on the previous page, the A/F sensor may have an open circuit. (This will also happen if the A/F sensor heater has an open circuit.)
- If the output voltage of the A/F sensor remains at either approximately 3.8 V or more, or 2.8 V or less (see Malfunction Condition diagram) under any conditions, including those described on the previous page, the A/F sensor may have a short circuit.
- The ECM stops fuel injection (fuel cut) during engine deceleration. This causes a lean condition and results in a momentary increase in the A/F sensor output voltage.

- The ECM must establish a closed throttle valve position learning value to perform fuel cut. If the battery terminal has been reconnected, the vehicle must be driven over 10 mph (16 km/h) to allow the ECM to learn the closed throttle valve position.
- When the vehicle is driven:
  The output voltage of the A/F sensor may be below 2.8 V during fuel enrichment. For the vehicle, this translates to a sudden increase in speed with the accelerator pedal fully depressed when trying to overtake another vehicle. The A/F sensor is functioning normally.
- The A/F sensor is a current output element; therefore, the current is converted into a voltage inside the ECM. Measuring the voltage at the connectors of the A/F sensor or ECM will show a constant voltage result.

NG → **Go to step 10**

OK

4	PERFORM CONFIRMATION DRIVING PATTERN

NEXT

5	CHECK WHETHER DTC OUTPUT RECURS (DTC P2195, P2196, P2197 OR P2198)

(a) Read DTCs using the intelligent tester.
(b) Select the following menu items: DIAGNOSIS / ENHANCED OBD II / DTC INFO / PENDING CODES.

Result

Display (DTC Output)	Proceed to
P2195, P2196, P2197 or P2198	A
No output	B

B → **Go to step 9**

A

6	REPLACE AIR FUEL RATIO SENSOR

(a) Replace the air fuel ratio sensor (See page EC-20).

NEXT

7	PERFORM CONFIRMATION DRIVING PATTERN

NEXT

8	CHECK WHETHER DTC OUTPUT RECURS (DTC P2195, P2196, P2197 OR P2198)

(a) Read DTCs using the intelligent tester.
(b) Select the following menu items: DIAGNOSIS / ENHANCED OBD II / DTC INFO / PENDING CODES.

Result

Display (DTC Output)	Proceed to
No output	A
P2195, P2196, P2197 or P2198	B

ES

B → REPLACE ECM AND PERFORM CONFIRMATION DRIVING PATTERN

A

9	CONFIRM WHETHER VEHICLE HAS RUN OUT OF FUEL IN PAST

NO → CHECK FOR INTERMITTENT PROBLEMS

YES

DTC CAUSED BY RUNNING OUT OF FUEL

10	INSPECT AIR FUEL RATIO SENSOR (HEATER RESISTANCE)

Component Side:

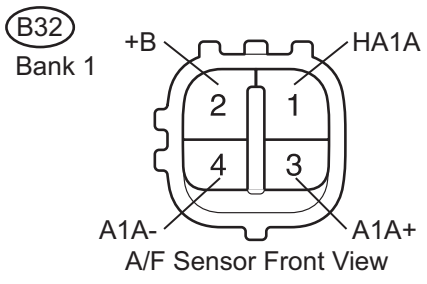

A126269E01

(a) Disconnect the B26 or B32 A/F sensor connector.
(b) Measure the resistance between the terminals of the A/F sensor connector.

Standard resistance:

Bank 1

Tester Connections	Specified Conditions
HA1A (1) - +B (2)	1.8 to 3.4 Ω at 20°C (68°F)
HA1A (1) - A1A- (4)	10 kΩ or higher

Bank 2

Tester Connections	Specified Conditions
HA2A (1) - +B (2)	1.8 to 3.4 Ω at 20°C (68°F)
HA2A (1) - A2A- (4)	10 kΩ or higher

(c) Reconnect the A/F sensor connector.

NG → REPLACE AIR FUEL RATIO SENSOR

OK

11 INSPECT ENGINE ROOM JUNCTION BLOCK ASSEMBLY (A/F SENSOR HEATER RELAY)

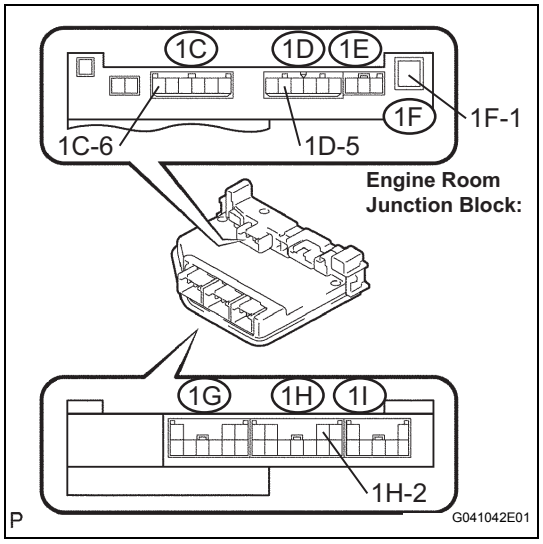

(a) Remove the engine room junction block.
(b) Measure the A/F sensor heater relay resistance.
Standard resistance

Tester Connections	Specified Conditions
1F-1 - 1C-6	10 kΩ or higher
1F-1 - 1C-6	Below 1 Ω (when battery voltage applied to terminals 1D-5 and 1H-2)

(c) Reinstall the engine room junction block.

NG → **REPLACE ENGINE ROOM JUNCTION BLOCK ASSEMBLY**

OK

12 CHECK HARNESS AND CONNECTOR (A/F SENSOR - ECM)

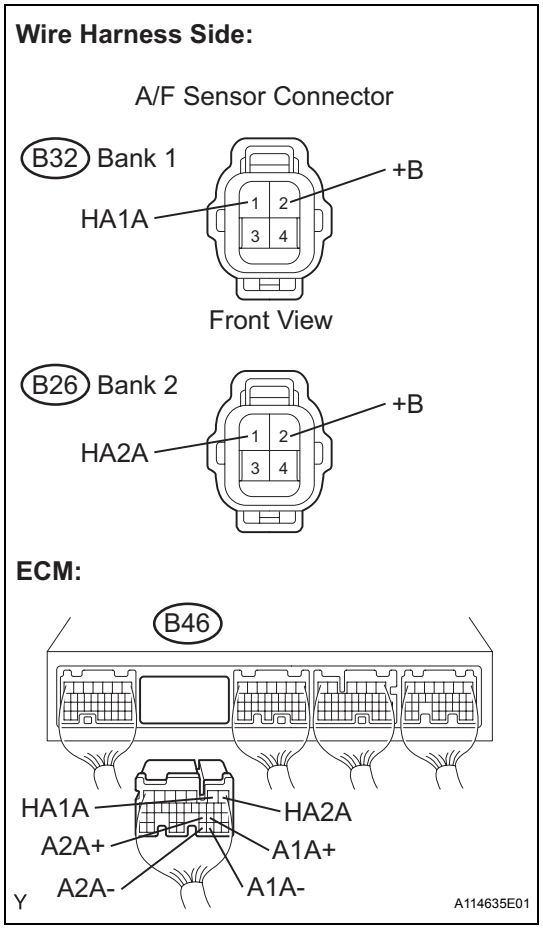

(a) Disconnect the B26 or B32 A/F sensor connector.
(b) Turn the ignition switch on (IG).
(c) Measure the voltage between the +B terminal of the A/F sensor connector and body ground.
Standard voltage

Tester Connections	Specified Conditions
+B (B32-2) - Body ground	9 to 14 V
+B (B26-2) - Body ground	9 to 14 V

(d) Turn the ignition switch off.
(e) Disconnect the B46 ECM connector.
(f) Measure the resistance between the terminals of A/F sensor connector and ECM connector.
Standard resistance (Check for open)

Tester Connections	Specified Conditions
HA1A (B32-1) - HA1A (B46-2)	Below 1 Ω
A1A+ (B32-3) - A1A+ (B46-22)	Below 1 Ω
A1A- (B32-4) - A1A- (B46-30)	Below 1 Ω
HA2A (B26-1) - HA2A (B46-1)	Below 1 Ω
A2A+ (B26-3) - A2A+ (B46-23)	Below 1 Ω
A2A- (B26-4) - A2A- (B46-31)	Below 1 Ω

Standard resistance (Check for short)

Tester Connections	Specified Conditions
HA1A (B32-1) or HA1A (B46-2) - Body ground	10 kΩ or higher
A1A+ (B32-3) or A1A+ (B46-22) - Body ground	10 kΩ or higher
A1A- (B32-4) or A1A- (B46-30) - Body ground	10 kΩ or higher
HA2A (B26-1) or HA2A (B46-1) - Body ground	10 kΩ or higher

ES

Tester Connections	Specified Conditions
A2A+ (B26-3) or A2A+ (B46-23) - Body ground	10 kΩ or higher
A2A- (B26-4) or A2A- (B46-31) - Body ground	10 kΩ or higher

(g) Reconnect the ECM connector.
(h) Reconnect the A/F sensor connector.

Reference (System Diagram of Bank 1 Sensor 1):

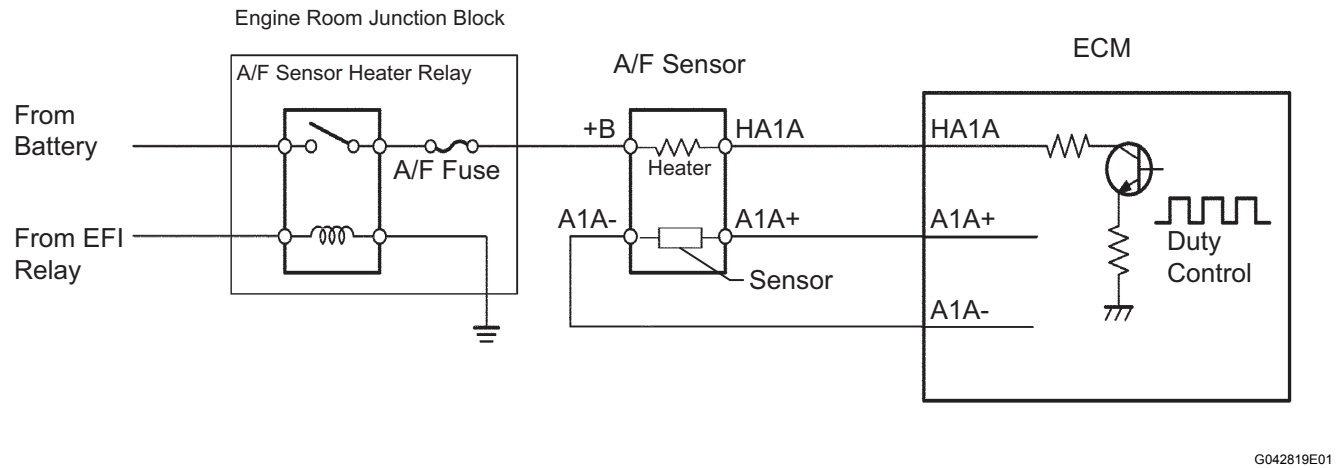

NG → **REPAIR OR REPLACE HARNESS OR CONNECTOR**

OK

13 CHECK AIR INDUCTION SYSTEM

(a) Check the air induction system for vacuum leakage.
OK:
No leakage from air induction system.

NG → **REPAIR OR REPLACE AIR INDUCTION SYSTEM**

OK

14 CHECK FUEL PRESSURE

(a) Check the fuel pressure (See page FU-7).

NG → **REPAIR OR REPLACE FUEL SYSTEM**

OK

15 INSPECT FUEL INJECTOR ASSEMBLY

(a) Check the injector injection (whether fuel volume is high or low, and whether injection pattern is poor) (See page FU-15).

NG → **REPLACE FUEL INJECTOR ASSEMBLY**

OK

16	REPLACE AIR FUEL RATIO SENSOR

(a) Replace the air fuel ratio sensor (See page EC-20).

NEXT

17	PERFORM CONFIRMATION DRIVING PATTERN

NEXT

ES

18	CHECK WHETHER DTC OUTPUT RECURS (DTC P2195, P2196, P2197 OR P2198)

(a) Read DTCs using the intelligent tester.
(b) Select the following menu items: DIAGNOSIS / ENHANCED OBD II / DTC INFO / PENDING CODES.

Result

Display (DTC Output)	Proceed to
No output	A
P2195, P2196, P2197 or P2198	B

B → REPLACE ECM AND PERFORM CONFIRMATION DRIVING PATTERN

A

19	CONFIRM WHETHER VEHICLE HAS RUN OUT OF FUEL IN PAST

NO → CHECK FOR INTERMITTENT PROBLEMS

YES

DTC CAUSED BY RUNNING OUT OF FUEL

20	REPLACE AIR FUEL RATIO SENSOR

(a) Replace the air fuel ratio sensor (See page EC-20).

NEXT

21	PERFORM CONFIRMATION DRIVING PATTERN

NEXT

22	CHECK WHETHER DTC OUTPUT RECURS (DTC P2195, P2196, P2197 OR P2198)

(a) Connect the intelligent tester to the DLC3.
(b) Turn the ignition switch on (IG) and turn the tester on.
(c) Read DTCs using the intelligent tester.
(d) Select the following menu items: DIAGNOSIS / ENHANCED OBD II / DTC INFO / PENDING CODES.

Result

Display (DTC Output)	Proceed to
No output	A
P2195, P2196, P2197 or P2198 (A/F sensor pending DTCs)	B

ES

B → REPLACE ECM

A

END

DTC	P2238	Oxygen (A/F) Sensor Pumping Current Circuit Low (Bank 1 Sensor 1)
DTC	P2239	Oxygen (A/F) Sensor Pumping Current Circuit High (Bank 1 Sensor 1)
DTC	P2241	Oxygen (A/F) Sensor Pumping Current Circuit Low (Bank 2 Sensor 1)
DTC	P2242	Oxygen (A/F) Sensor Pumping Current Circuit High (Bank 2 Sensor 1)
DTC	P2252	Oxygen (A/F) Sensor Reference Ground Circuit Low (Bank 1 Sensor 1)
DTC	P2253	Oxygen (A/F) Sensor Reference Ground Circuit High (Bank 1 Sensor 1)
DTC	P2255	Oxygen (A/F) Sensor Reference Ground Circuit Low (Bank 2 Sensor 1)
DTC	P2256	Oxygen (A/F) Sensor Reference Ground Circuit High (Bank 2 Sensor 1)

ES

HINT:
- Although the DTC titles say oxygen sensor, these DTCs relate to the Air-Fuel Ratio (A/F) sensor.
- Sensor 1 refers to the sensor mounted in front of the Three-Way Catalytic Converter (TWC) and located near the engine assembly.

DESCRIPTION

Refer to DTC P2195 (See page ES-313).

DTC No.	DTC Detection Conditions	Trouble Areas
P2238 P2241	• Case 1: Condition (a) or (b) continues for 5.0 seconds or more (1 trip detection logic): (a) AF+ voltage is 0.5 V or less (b) (AF+) - (AF-) = 0.1 V or less • Case 2: A/F sensor admittance: Less than 0.022 1/Ω (2 trip detection logic)	• Open or short in A/F sensor (bank 1, 2 sensor 1) circuit • A/F sensor (bank 1, 2 sensor 1) • A/F sensor heater (bank 1, 2 sensor 1) • A/F sensor heater relay • A/F sensor heater and relay circuits • ECM
P2239 P2242	AF+ voltage is more than 4.5 V for 5.0 seconds or more (2 trip detection logic)	• Open or short in A/F sensor (bank 1, 2 sensor 1) circuit • A/F sensor (bank 1, 2 sensor 1) • A/F sensor heater • A/F sensor heater relay • A/F sensor heater and relay circuits • ECM

DTC No.	DTC Detection Conditions	Trouble Areas
P2252 P2255	AF- voltage is 0.5 V or less for 5.0 seconds or more (2 trip detection logic)	• Open or short in A/F sensor (bank 1, 2 sensor 1) circuit • A/F sensor (bank 1, 2 sensor 1) • A/F sensor heater • A/F sensor heater relay • A/F sensor heater and relay circuits • ECM
P2253 P2256	AF- voltage is more than 4.5 V for 5.0 seconds or more (2 trip detection logic)	• Open or short in A/F sensor (bank 1, 2 sensor 1) circuit • A/F sensor (bank 1, 2 sensor 1) • A/F sensor heater • A/F sensor heater relay • A/F sensor heater and relay circuits • ECM

ES

HINT:
- DTC P2238, P2239, P2252 and P2253 indicate malfunctions related to the bank 1 A/F sensor circuit.
- DTC P2241, P2242, P2255 and P2256 indicate malfunctions related to the bank 2 A/F sensor circuit.
- Bank 1 refers to the bank that includes cylinder No. 1.
- Bank 2 refers to the bank that includes cylinder No. 2.

MONITOR DESCRIPTION

The Air-Fuel Ratio (A/F) sensor varies its output voltage in proportion to the air-fuel ratio. If the A/F sensor impedance (alternating current resistance) or voltage output deviates greatly from the standard range, the ECM determines that there is an open or short malfunction in the A/F sensor circuit.

MONITOR STRATEGY

Related DTCs	P2238: A/F sensor (Bank 1) open circuit between AF+ and AF- P2238: A/F sensor (Bank 1) short circuit between AF+ and AF- P2238: A/F sensor (Bank 1) short circuit between AF+ and GND P2239: A/F sensor (Bank 1) short circuit between AF+ and +B P2241: A/F sensor (Bank 2) open circuit between AF+ and AF- P2241: A/F sensor (Bank 2) short circuit between AF+ and AF- P2241: A/F sensor (Bank 2) short circuit between AF+ and GND P2242: A/F sensor (Bank 2) short circuit between AF+ and +B P2252: A/F sensor (Bank 1) short circuit between AF- and GND P2253: A/F sensor (Bank 1) short circuit between AF- and +B P2255: A/F sensor (Bank 2) short circuit between AF- and GND P2256: A/F sensor (Bank 2) short circuit between AF- and +B
Required Sensors / Components (Main)	A/F sensor
Required Sensors / Components (Related)	Engine Coolant Temperature (ECT) sensor, Crankshaft position sensor
Frequency of Operation	Once per driving cycle
Duration	P2238 and P2241 (open circuit between AF+ and AF-): 10 seconds Others: 5 seconds
MIL Operation	2 driving cycles
Sequence of Operation	None

TYPICAL ENABLING CONDITIONS

All:

The monitor will run whenever these DTCs are not present	None

P2238 and P2241 (open circuit between AF+ and AF-):

AF+ terminal voltage	0.5 to 4.5 V
AF- terminal voltage	0.5 to 4.5 V
Difference between AF+ terminal and AF- terminal voltage	0.1 to 0.8 V
ECT	5°C (41°F) or more

Engine	Running
Fuel-cut	OFF
Time after fuel-cut OFF	5 seconds or more
A/F sensor heater	ON
Battery voltage	11 V or more
Ignition switch	ON
Time after ignition switch is OFF to ON	5 seconds or more

Others:

Battery voltage	11 V or more
Ignition switch	ON
Time after ignition switch is OFF to ON	5 seconds or more

TYPICAL MALFUNCTION THRESHOLDS

P2238 and P2241 (Open circuit between AF+ and AF-):

A/F sensor admittance	Below 0.022 1/Ω

P2238 and P2241 (Short circuit between AF+ and GND):

AF+ terminal voltage	0.5 V or less

P2238 and P2241 (Short circuit between AF+ and AF-):

Difference between AF+ terminal and AF- terminal voltage	0.1 V or less

P2239 and P2242 (Short circuit between AF+ and +B):

AF+ terminal voltage	More than 4.5 V

P2252 and P2255 (Short circuit between AF- and GND):

AF- terminal voltage	0.5 V or less

P2253 and P2256 (Short circuit between AF- and +B):

AF- terminal voltage	More than 4.5 V

WIRING DIAGRAM

Refer to DTC P2195 (See page ES-317).

INSPECTION PROCEDURE

HINT:

For use the intelligent tester only:

Malfunctioning areas can be identified by performing the A/F CONTROL function provided in the ACTIVE TEST. The A/F CONTROL function can help to determine whether the Air-Fuel Ratio (A/F) sensor, Heated Oxygen (HO2) sensor and other potential trouble areas are malfunctioning.

The following instructions describe how to conduct the A/F CONTROL operation using the intelligent tester.

(a) Connect the intelligent tester to the DLC3.

(b) Start the engine and turn the tester on.

(c) Warm up the engine at an engine speed of 2,500 rpm for approximately 90 seconds.

(d) Select the following menu items on the tester: DIAGNOSIS / ENHANCED OBD II / ACTIVE TEST / A/F CONTROL.

(e) Perform the A/F CONTROL operation with the engine in an idling condition (press the RIGHT or LEFT button to change the fuel injection volume).

(f) Monitor the voltage outputs of the A/F and HO2 sensors (AFS B1S1 and O2S B1S2 or AFS B2S1 and O2S B2S2) displayed on the tester.
HINT:
- The A/F CONTROL operation lowers the fuel injection volume by 12.5% or increases the injection volume by 25%.
- Each sensor reacts in accordance with increases and decreases in the fuel injection volume.

Standard voltage

Tester Display (Sensor)	Injection Volumes	Status	Voltages
AFS B1S1 or AFS B2S1 (A/F)	+25%	Rich	Less than 3.0
AFS B1S1 or AFS B2S1 (A/F)	-12.5%	Lean	More than 3.35
O2S B1S2 or O2S B2S2 (HO2)	+25%	Rich	More than 0.55
O2S B1S2 or O2S B2S2 (HO2)	-12.5%	Lean	Less than 0.4

ES

NOTICE:
The Air-Fuel Ratio (A/F) sensor has an output delay of a few seconds and the Heated Oxygen (HO2) sensor has a maximum output delay of approximately 20 seconds.

Case	A/F Sensor (Sensor 1) Output Voltage		HO2 Sensor (Sensor 2) Output Voltage		Main Suspected Trouble Area
1	Injection Volume +25% -12.5%		Injection Volume +25% -12.5%		-
	Output Voltage More than 3.35 V Less than 3.0 V	 OK	Output Voltage More than 0.55 V Less than 0.4 V	 OK	
2	Injection Volume +25% -12.5%		Injection Volume +25% -12.5%		• A/F sensor • A/F sensor heater • A/F sensor circuit
	Output Voltage Almost no reaction	NG	Output Voltage More than 0.55 V Less than 0.4 V	 OK	
3	Injection Volume +25% -12.5%		Injection Volume +25% -12.5%		• HO2 sensor • HO2 sensor heater • HO2 sensor circuit
	Output Voltage More than 3.35 V Less than 3.0 V	 OK	Output Voltage Almost no reaction	NG	
4	Injection volume +25% -12.5%		Injection Volume +25% -12.5%		• Injector • Fuel pressure • Gas leakage from exhaust system (Air-fuel ratio extremely lean or rich)
	Output Voltage Almost no reaction	NG	Output Voltage Almost no reaction	NG	

– Following the A/F CONTROL procedure enables technicians to check the graph of the voltage outputs of both the A/F and HO2 sensors.

– To display the graph, select the following menu items on the tester: DIAGNOSIS / ENHANCED OBD II / ACTIVE TEST / A/F CONTROL / USER DATA / AFS B1S1 and O2S B1S2 or AFS B2S1 and O2S B2S2. Press the YES button and then the ENTER button. Then press the F4 button.
HINT:
- Read freeze frame data using the intelligent tester. The ECM records vehicle and driving condition information as freeze frame data the moment a DTC is stored. When troubleshooting, freeze frame data can be helpful in determining whether the vehicle was running or stopped, whether the engine was warmed up or not, whether the air/fuel ratio was lean or rich, as well as other data recorded at the time of a malfunction.
- A low A/F sensor voltage could be caused by a rich air-fuel mixture. Check for conditions that would cause the engine to run rich.
- A high A/F sensor voltage could be caused by a lean air-fuel mixture. Check for conditions that would cause the engine to run lean.

ES

1	INSPECT AIR FUEL RATIO SENSOR (HEATER RESISTANCE)

Component Side:

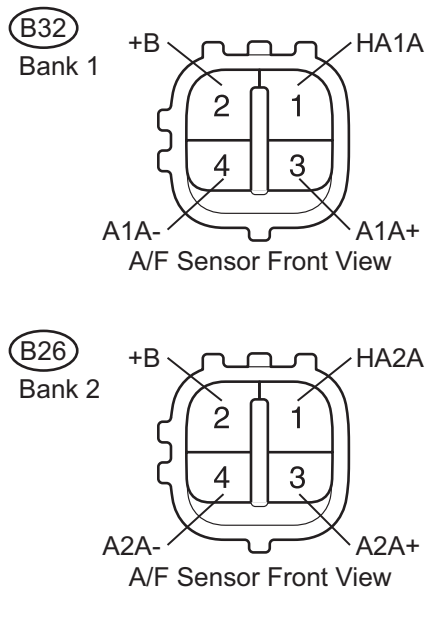

(a) Disconnect the B26 or B32 A/F sensor connector.
(b) Measure the resistance between the terminals of the A/F sensor connector.
Standard resistance:
Bank 1

Tester Connections	Specified Conditions
HA1A (1) - +B (2)	1.8 to 3.4 Ω at 20°C (68°F)
HA1A (1) - A1A- (4)	10 kΩ or higher

Bank 2

Tester Connections	Specified Conditions
HA1A (1) - +B (2)	1.8 to 3.4 Ω at 20°C (68°F)
HA1A (1) - A1A- (4)	10 kΩ or higher

(c) Reconnect the A/F sensor connector.

NG → **REPLACE AIR FUEL RATIO SENSOR**

OK

2 INSPECT ENGINE ROOM JUNCTION BLOCK ASSEMBLY (A/F SENSOR HEATER RELAY)

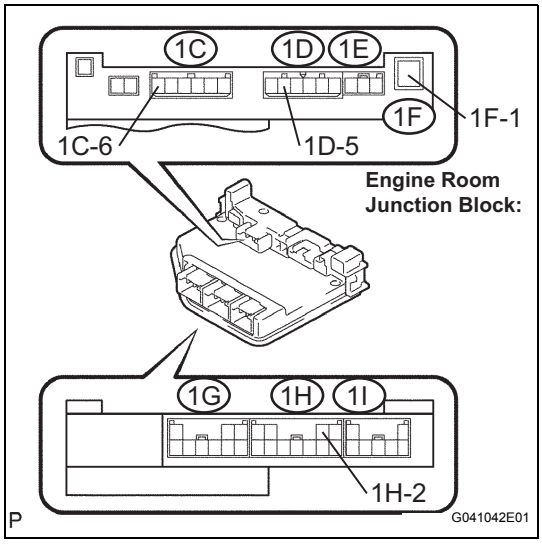

(a) Remove the engine room junction block.
(b) Measure the A/F sensor heater relay resistance.
Standard resistance

Tester Connections	Specified Conditions
1F-1 - 1C-6	10 kΩ or higher
1F-1 - 1C-6	Below 1 Ω (when battery voltage applied to terminals 1D-5 and 1H-2)

(c) Reinstall the engine room junction block.

NG → **REPLACE ENGINE ROOM JUNCTION BLOCK ASSEMBLY**

OK

3 CHECK HARNESS AND CONNECTOR (A/F SENSOR - ECM)

Wire Harness Side:

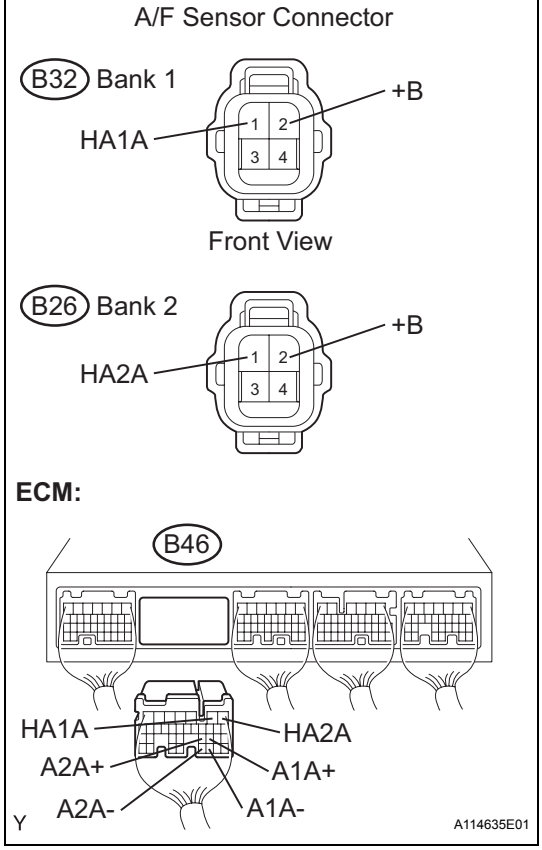

(a) Disconnect the B26 or B32 A/F sensor connector.
(b) Turn the ignition switch on (IG).
(c) Measure the voltage between the +B terminal of the A/F sensor connector and body ground.
Standard voltage

Tester Connections	Specified Conditions
+B (B32-2) - Body ground	9 to 14 V
+B (B26-2) - Body ground	9 to 14 V

(d) Turn the ignition switch off.
(e) Disconnect the B46 ECM connector.
(f) Measure the resistance between the terminals of A/F sensor connector and ECM connector.
Standard resistance (Check for open)

Tester Connections	Specified Conditions
HA1A (B32-1) - HA1A (B46-2)	Below 1 Ω
A1A+ (B32-3) - A1A+ (B46-22)	Below 1 Ω
A1A- (B32-4) - A1A- (B46-30)	Below 1 Ω
HA2A (B26-1) - HA2A (B46-1)	Below 1 Ω
A2A+ (B26-3) - A2A+ (B46-23)	Below 1 Ω
A2A- (B26-4) - A2A- (B46-31)	Below 1 Ω

Standard resistance (Check for short)

Tester Connections	Specified Conditions
HA1A (B32-1) or HA1A (B46-2) - Body ground	10 kΩ or higher
A1A+ (B32-3) or A1A+ (B46-22) - Body ground	10 kΩ or higher
A1A- (B32-4) or A1A- (B46-30) - Body ground	10 kΩ or higher
HA2A (B26-1) or HA2A (B46-1) - Body ground	10 kΩ or higher

Tester Connections	Specified Conditions
A2A+ (B26-3) or A2A+ (B46-23) - Body ground	10 kΩ or higher
A2A- (B26-4) or A2A- (B46-31) - Body ground	10 kΩ or higher

(g) Reconnect the ECM connector.
(h) Reconnect the A/F sensor connector.

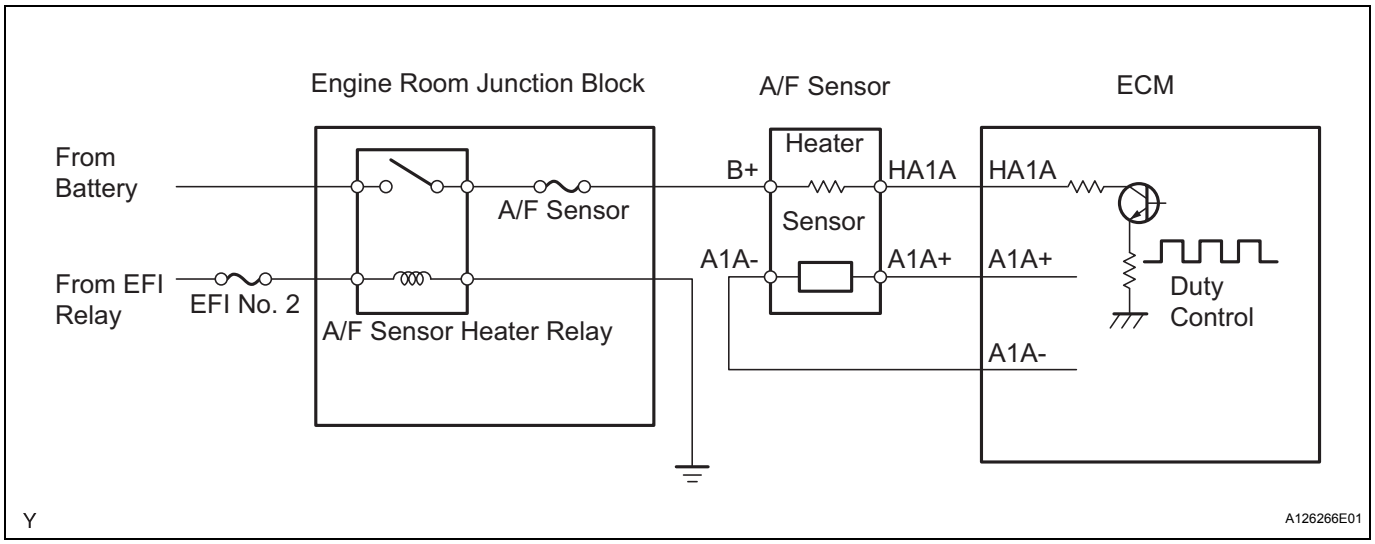

NG → **REPAIR OR REPLACE HARNESS OR CONNECTOR**

OK →

REPLACE ECM

ES

DTC	P2401	Evaporative Emission System Leak Detection Pump Control Circuit Low

DTC	P2402	Evaporative Emission System Leak Detection Pump Control Circuit High

DTC SUMMARY

DTCs	Monitoring Items	Malfunction Detection Conditions	Trouble Areas	Detection Timings	Detection Logic
P2401	Vacuum pump stuck OFF	Vacuum pump creates negative pressure through 0.02 inch orifice, and EVAP system pressure is measured to determine leak pressure standard. 0.02 inch leak pressure standard is measured at start and end of leak check. If system pressure is higher than -1.06 kPa (-7.95 mmHg)*, or lower than -4.85 kPa (-36.38 mmHg)*, ECM determines that vacuum pump stuck OFF.	• Pump module • Connector/wire harness (Pump module - ECM) • ECM • Leakage from EVAP system	While ignition switch off	2 trip
P2402	Vacuum pump stuck ON	Vacuum pump creates negative pressure through 0.02 inch orifice, and EVAP system pressure is measured to determine leak pressure standard. If system pressure is higher than -1.06 kPa (-7.95 mmHg)*, or lower than -4.85 kPa (-36.38 mmHg)*, ECM determines that vacuum pump stuck ON.	• Pump module • Connector/wire harness (Pump module - ECM) • ECM	While ignition switch off	2 trip

*: The threshold values vary according to the atmospheric pressure measured in operation A. The values described in the table above are based on an atmospheric pressure of 100 kPa (750.1 mmHg).
HINT:
The vacuum pump is built into the pump module.

DESCRIPTION

The circuit description can be found in the EVAP (Evaporative Emission) System (See page ES-370).

INSPECTION PROCEDURE

Refer to the EVAP System (See page ES-373).

MONITOR DESCRIPTION

5 hours*1 after the ignition switch is turned off, the electric vacuum pump creates negative pressure (vacuum) in the EVAP (Evaporative Emission) system. The ECM monitors for leaks and actuator malfunctions based on the EVAP pressure.
HINT:
*1: If the engine coolant temperature is not below 35°C (95°F) 5 hours after the ignition switch is turned off, the monitor check starts 2 hours later. If it is still not below 35°C (95°F) 7 hours after the ignition switch is turned off, the monitor check starts 2.5 hours later.

Sequence	Operations	Descriptions	Duration
-	ECM activation	Activated by soak timer, 5 hours (7 or 9.5 hours) after ignition switch turned to OFF.	-
A	Atmospheric pressure measurement	Vent valve turned OFF (vent) and EVAP system pressure measured by ECM in order to register atmospheric pressure. If pressure in EVAP system is not between 70 kPa and 110 kPa (525 mmHg and 825 mmHg), ECM cancels EVAP system monitor.	10 seconds

Sequence	Operations	Descriptions	Duration
B	First 0.02 inch leak pressure measurement	In order to determine 0.02 inch leak pressure standard, vacuum pump creates negative pressure (vacuum) through 0.02 inch orifice and then ECM checks if vacuum pump and vent valve operate normally.	60 seconds
C	EVAP system pressure measurement	Vent valve turned ON (closed) to shut EVAP system. Negative pressure (vacuum) is created in EVAP system, and EVAP system pressure then measured. Write down measured value as it will be used in leak check. If EVAP pressure does not stabilize within 15 minutes, ECM cancels EVAP system monitor.	15 minutes*2
D	Purge VSV monitor	Purge VSV is opened and then EVAP system pressure is measured by ECM. Large increase indicates normal.	10 seconds
E	Second 0.02 inch leak pressure measurement	After second 0.02 inch leak pressure measurement, leak check is performed by comparing first and second 0.02 inch leak pressure standards. If stabilized system pressure is higher than second 0.02 inch leak pressure standard, ECM determines that EVAP system leaking.	60 seconds
F	Final check	Atmospheric pressure is measured and then monitoring result is recorded by ECM.	-

*2: If there is only a small amount of fuel in the fuel tank, stabilizing the EVAP pressure takes longer than usual.

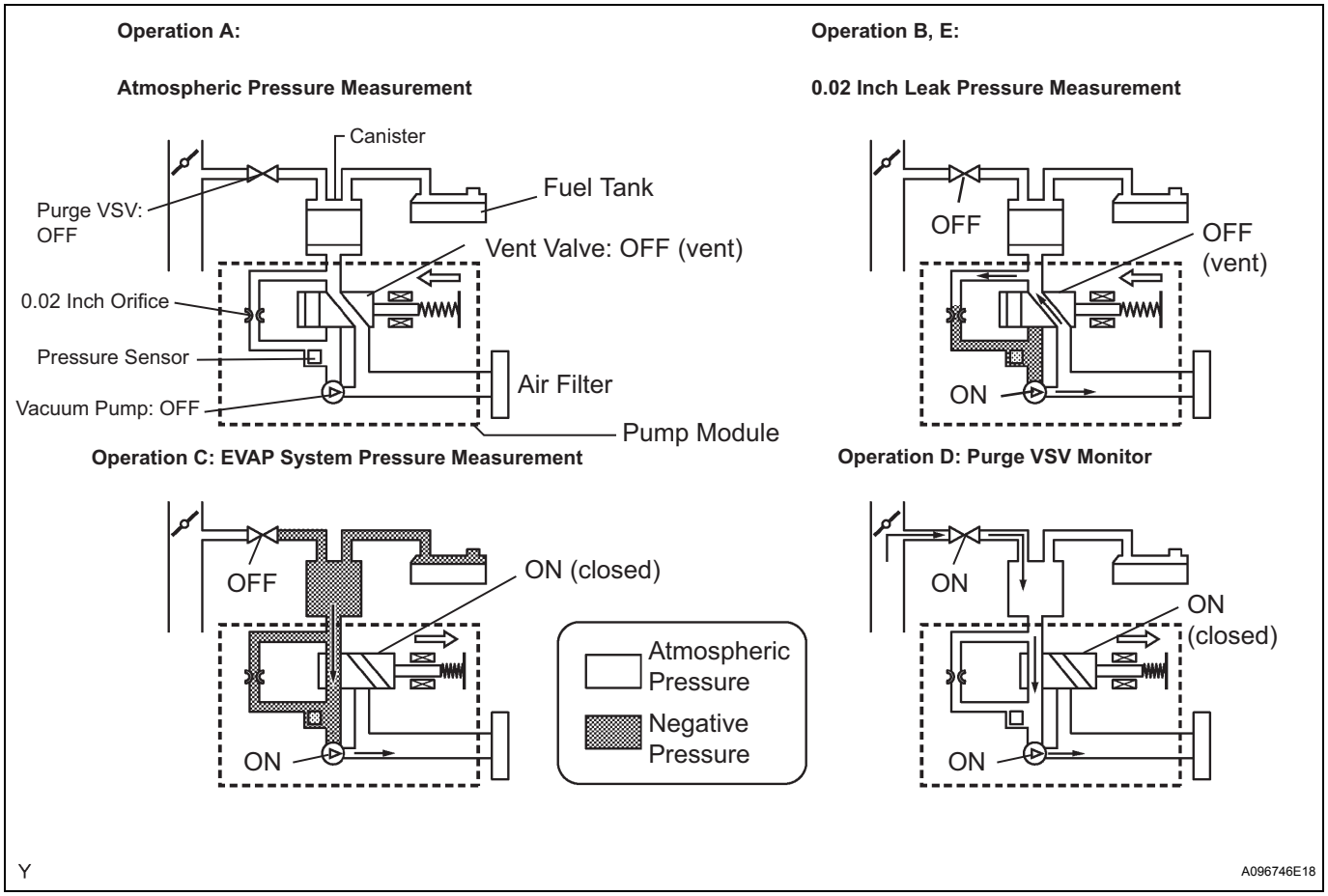

1. P2401: Vacuum pump stuck OFF
   In operation B, the vacuum pump creates negative pressure (a vacuum) through the 0.02 inch orifice. The EVAP (Evaporative Emission) system pressure is then measured by the ECM, using the pressure sensor, to determine the 0.02 inch leak pressure standard. If the pressure is higher than -1.06 kPa (-7.95 mmHg)*, or lower than -4.85 kPa (-36.38 mmHg)*, the ECM interprets this as the vacuum pump being stuck OFF (not operating). The ECM illuminates the MIL and sets the DTC (2 trip detection logic).
   *: The thresholds vary according to the atmospheric pressure measured in operation A. The values described above are based on an atmospheric pressure of 100 kPa (750.1 mmHg): absolute pressure.

EVAP Pressure when Vacuum Pump Stuck OFF:

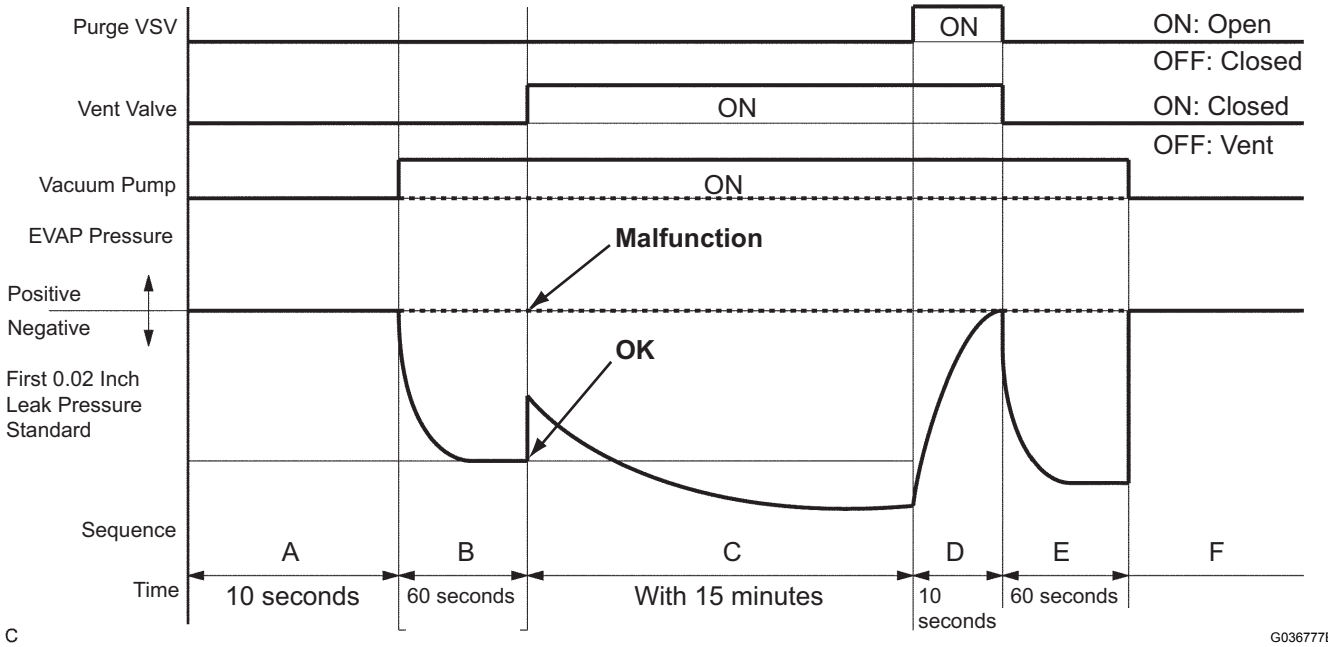

2. P2402: Vacuum pump stuck ON
In operation B, the vacuum pump creates negative pressure (a vacuum) through the 0.02 inch orifice. The EVAP (Evaporative Emission) system pressure is then measured by the ECM, using the pressure sensor, to determine the 0.02 inch leak pressure standard. If the pressure is higher than -1.06 kPa (-7.95 mmHg)*, or lower than -4.85 kPa (-36.38 mmHg)*, the ECM interprets this as the vacuum pump being stuck ON (remaining ON all the time). The ECM illuminates the MIL and sets the DTC (2 trip detection logic).
*: The thresholds vary according to the atmospheric pressure measured in operation A. The values described above are based on an atmospheric pressure of 100 kPa (750.1 mmHg): absolute pressure.

EVAP Pressure when Vacuum Pump Stuck ON:

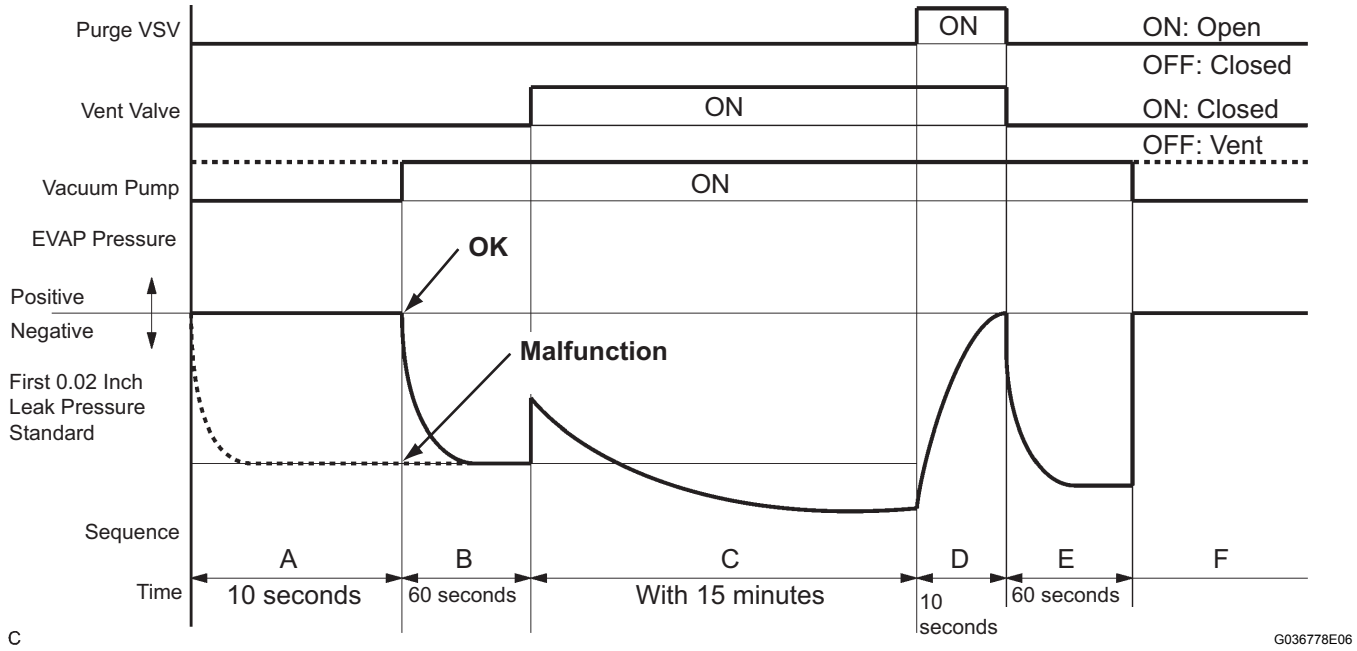

HINT:
The detection logic of DTCs P2401 and P2402 is the same because in both cases the 0.02 inch leak pressure standard measured in operation B is compared to the atmospheric pressure registered in operation A. The ECM calculates the difference between these pressures by deducting [the 0.02 inch leak pressure standard] from [the stored atmospheric pressure], and uses this to monitor the EVAP system pressure change.

OBD II MONITOR SPECIFICATIONS

MONITOR STRATEGY

Related DTCs	P2401: Vacuum pump stuck OFF P2402: Vacuum pump stuck ON
Required Sensors / Components	Purge VSV and pump module
Frequency of Operation	Once per driving cycle
Duration	Within 2 minutes
MIL Operation	2 driving cycles
Sequence of Operation	None

TYPICAL ENABLING CONDITIONS

The monitor will run whenever these DTCs are not present	None

Key-off monitor is run when all of the following conditions met	-
Atmospheric pressure	70 to 110 kPa (525 to 825 mmHg)
Battery voltage	10.5 V or more
Vehicle speed	2.5 mph (4 km/h) or less
Ignition switch	OFF
Time after key-off	5 or 7 or 9.5 hours
EVAP pressure sensor malfunction (P0450, P0452, P0453)	Not detected
EVAP canister purge valve	Not operated by scan tool
EVAP canister vent valve	Not operated by scan tool
EVAP leak detection pump	Not operated by scan tool
Both of the following conditions 1 and 2 set before key-off	-
1. Duration that vehicle has been driven	5 minutes or more
2. EVAP purge operation	Performed
ECT	4.4 to 35°C (40 to 95°F)
IAT	4.4 to 35°C (40 to 95°F)

ES

Key-off monitor sequence 1 to 8

1. Atmospheric pressure measurement

Next sequence is run if the following condition is met	-
Atmospheric pressure change	Less than 0.3 kPa (2.25 mmHg) in 1 second

2. First reference pressure measurement

Next sequence is run if the following conditions are met	Condition 1, 2 and 3
1. EVAP pressure just after reference pressure measurement start	-1 kPa (-7.5 mmHg) or less
2. Reference pressure	-4.85 to -1.057 kPa (-36.384 to -7.929 mmHg)
3. Reference pressure	Saturated

3. EVAP canister vent valve close stuck check

Next sequence is run if the following condition is met	-
EVAP pressure change after vent valve is ON	0.3 kPa (2.25 mmHg) or more

4. Vacuum introduction

Next sequence is run if the following condition is met	-
EVAP pressure	Saturated within 15 minutes

5. EVAP canister purge valve close stuck check

Next sequence is run if the following condition is met	-
EVAP pressure change after purge valve is open	0.3 kPa (2.25 mmHg) or more

6. Second reference pressure measurement

Next sequence is run if the following conditions are met	Condition 1, 2, 3 and 4
1. EVAP pressure just after reference pressure	-1 kPa (-7.5 mmHg) or less
2. Reference pressure	-4.85 to -1.057 kPa (-36.384 to -7.929 mmHg)
3. Reference pressure	Saturated
4. Difference between first reference pressure and second reference pressure	Less than 0.7 kPa (5.25 mmHg)

7. Leak check

Next sequence is run if the following condition is met	-
EVAP pressure when vacuum introduction is complete	Lower than second reference pressure

8. Atmospheric pressure measurement

EVAP monitor is complete if the following condition is met	-
Atmospheric pressure difference between sequence 1 and 8	Within 0.3 kPa (2.25 mmHg)

TYPICAL MALFUNCTION THRESHOLDS

One of the following conditions met	-
EVAP pressure just after reference pressure measurement start	More than -1 kPa (-7.5 mmHg)
Reference pressure	Less than -4.85 kPa (-36.384 mmHg)
Reference pressure	-1.057 kPa (-7.929 mmHg) or more
Reference pressure	Not saturated
Difference between first reference pressure and second reference pressure	0.7 kPa (5.25 mmHg)

MONITOR RESULT

Refer to Monitor Result for detailed information (See page ES-25).

DTC	P2419	Evaporative Emission System Switching Valve Control Circuit Low

DTC	P2420	Evaporative Emission System Switching Valve Control Circuit High

DTC SUMMARY

DTCs	Monitoring Items	Malfunction Detection Conditions	Trouble Areas	Detection Timings	Detection Logic
P2419	Vent valve stuck closed	Vacuum pump creates negative pressure through 0.02 inch orifice and EVAP system pressure measured to determine leak pressure standard. If system pressure is higher than -1.06 kPa (-7.95 mmHg)* 4 seconds after vacuum pump turned ON, ECM determines that vent valve is stuck closed.	• Pump module • Connector/wire harness (Pump module - ECM) • ECM	While ignition switch OFF	2 trip
P2420	Vent valve stuck open (vent)	Vacuum pump creates negative pressure through 0.02 inch orifice and EVAP system pressure measured to determine leak pressure standard. 0.02 inch leak pressure standard measured at start and at end of leak check. If system pressure does not increase by more than 0.3 kPa (2.25 mmHg) within 10 seconds after vent valve turned ON, ECM determines that vent valve is stuck closed.	• Pump module • Connector/wire harness (Pump module - ECM) • ECM • Leakage from EVAP system	While ignition switch OFF	2 trip

*: The threshold value varies according to the atmospheric pressure measured in operation A. The value described above is based on an atmospheric pressure of 100 kPa (750.1 mmHg): absolute pressure.
HINT:
The vent valve is built into the pump module.

DESCRIPTION

The circuit description can be found in the EVAP (Evaporative Emission) System (See page ES-370).

MONITOR DESCRIPTION

5 hours*1 after the ignition switch is turned off, the electric vacuum pump creates negative pressure (vacuum) in the EVAP (Evaporative Emission) system. The ECM monitors for leaks and actuator malfunctions based on the EVAP pressure.
HINT:
*1: If the engine coolant temperature is not below 35°C (95°F) 5 hours after the ignition switch is turned off, the monitor check starts 2 hours later. If it is still not below 35°C (95°F) 7 hours after the ignition switch is turned off, the monitor check starts 2.5 hours later.

Sequence	Operations	Descriptions	Duration
-	ECM activation	Activated by soak timer, 5 hours (7 or 9.5 hours) after ignition switch turned off.	-
A	Atmospheric pressure measurement	Vent valve turned OFF (vent) and EVAP system pressure measured by ECM in order to register atmospheric pressure. If pressure in EVAP system is not between 70 kPa and 110 kPa (525 mmHg and 825 mmHg), ECM cancels EVAP system monitor.	10 seconds
B	First 0.02 inch leak pressure measurement	In order to determine 0.02 inch leak pressure standard, vacuum pump creates negative pressure (vacuum) through 0.02 inch orifice and then ECM checks if vacuum pump and vent valve operate normally.	60 seconds

Sequence	Operations	Descriptions	Duration
C	EVAP system pressure measurement	Vent valve is turned ON (closed) to shut EVAP system. Negative pressure (vacuum) is created in EVAP system, and then EVAP system pressure is measured. Write down measured value as they will be used in leak check. If EVAP pressure does not stabilize within 15 minutes, ECM cancels EVAP system monitor.	15 minutes*2
D	Purge VSV monitor	Purge VSV is opened and then EVAP system pressure is measured by ECM. Large increase indicates normal.	10 seconds
E	Second 0.02 inch leak pressure measurement	After second 0.02 inch leak pressure measurement, leak check is performed by comparing first and second 0.02 inch leak pressure standards. If stabilized system pressure is higher than second 0.02 inch leak pressure standard, ECM determines that there is a leak in EVAP system.	60 seconds
F	Final check	Atmospheric pressure is measured and then monitoring result is recorded by ECM.	-

*2: If only a small amount of fuel is in the fuel tank, it takes longer for the EVAP pressure to stabilize.

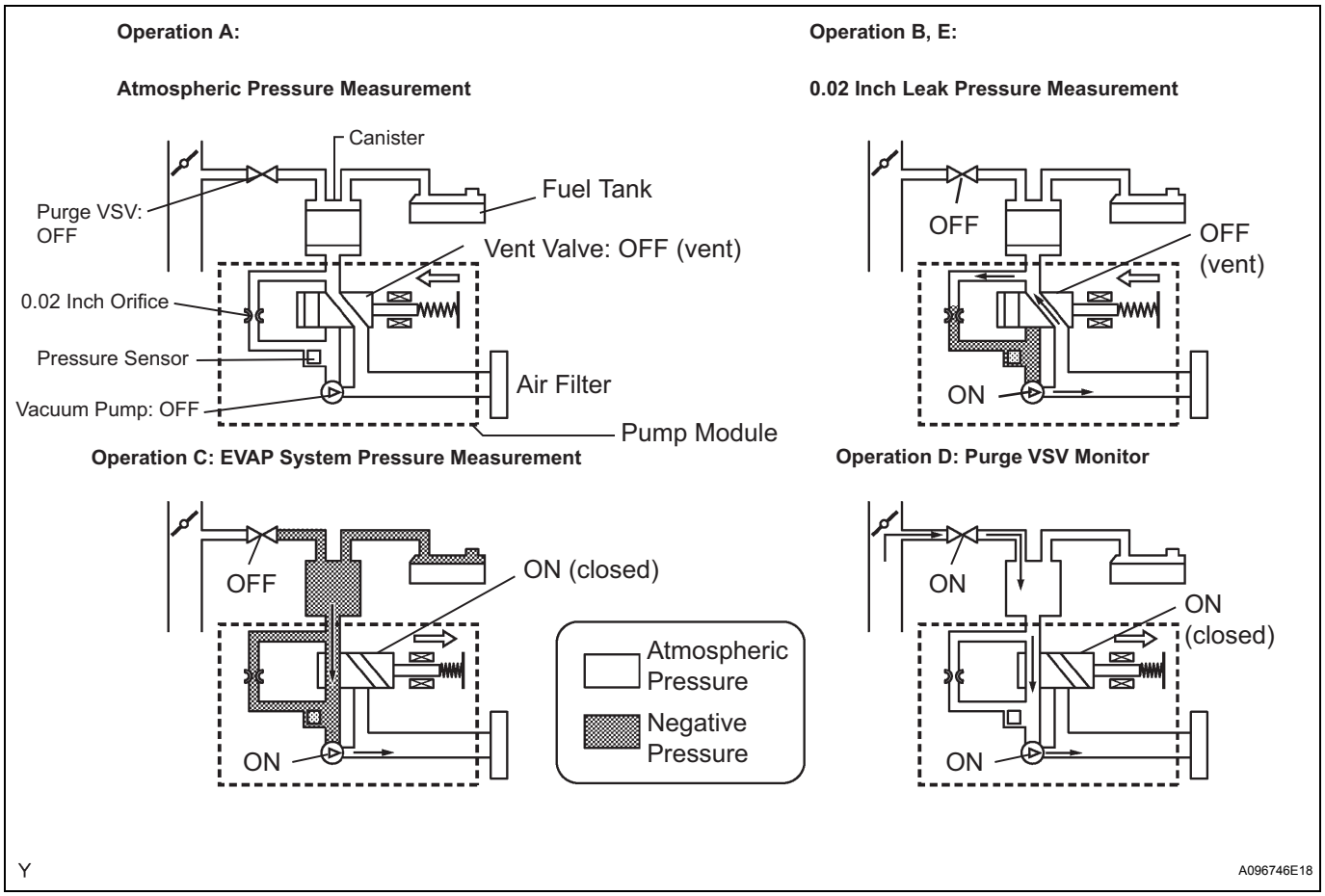

1. P2419: Vent valve stuck closed
   In operation B, the vacuum pump creates negative pressure (a vacuum) through the 0.02 inch orifice. The EVAP (Evaporative Emission) system pressure is then measured by the ECM, using the pressure sensor, to determine the 0.02 inch leak pressure standard. If the pressure exceeds -1.06 kPa (-7.95 mmHg)* 4 seconds after the vacuum pump is turned ON, the ECM interprets this as the vent valve being stuck closed. The ECM illuminates the MIL and sets the DTC (2 trip detection logic).
   *: The threshold varies according to the atmospheric pressure measured in operation A. The value described above is based on an atmospheric pressure of 100 kPa (750.1 mmHg): absolute pressure.

EVAP Pressure when Vent Valve Stuck ON:

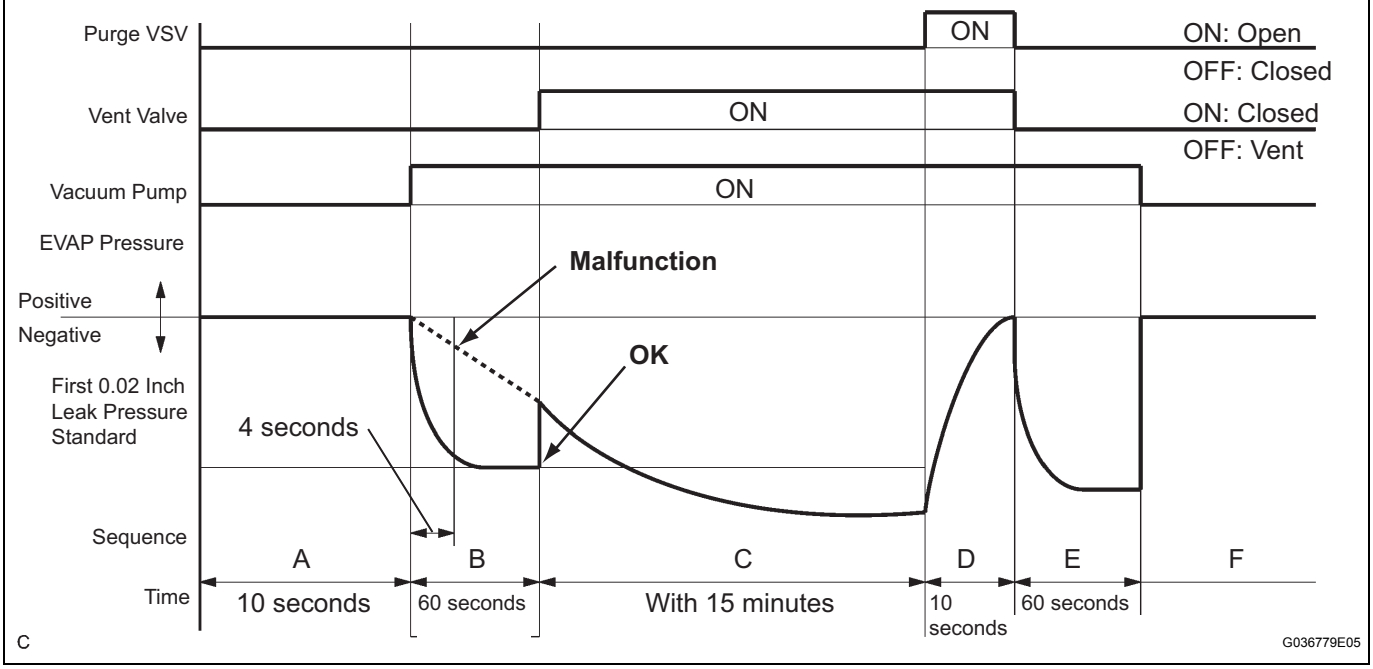

2. P2420: Vent valve stuck open (vent)
In operation C, the vent valve turns ON (closes) and the EVAP (Evaporative Emission) system pressure is then measured by the ECM, using the pressure sensor, to conduct an EVAP leak check. If the pressure does not increase when the vent valve is open, the ECM interprets this as the vent valve being stuck open. The ECM illuminates the MIL and sets the DTC.

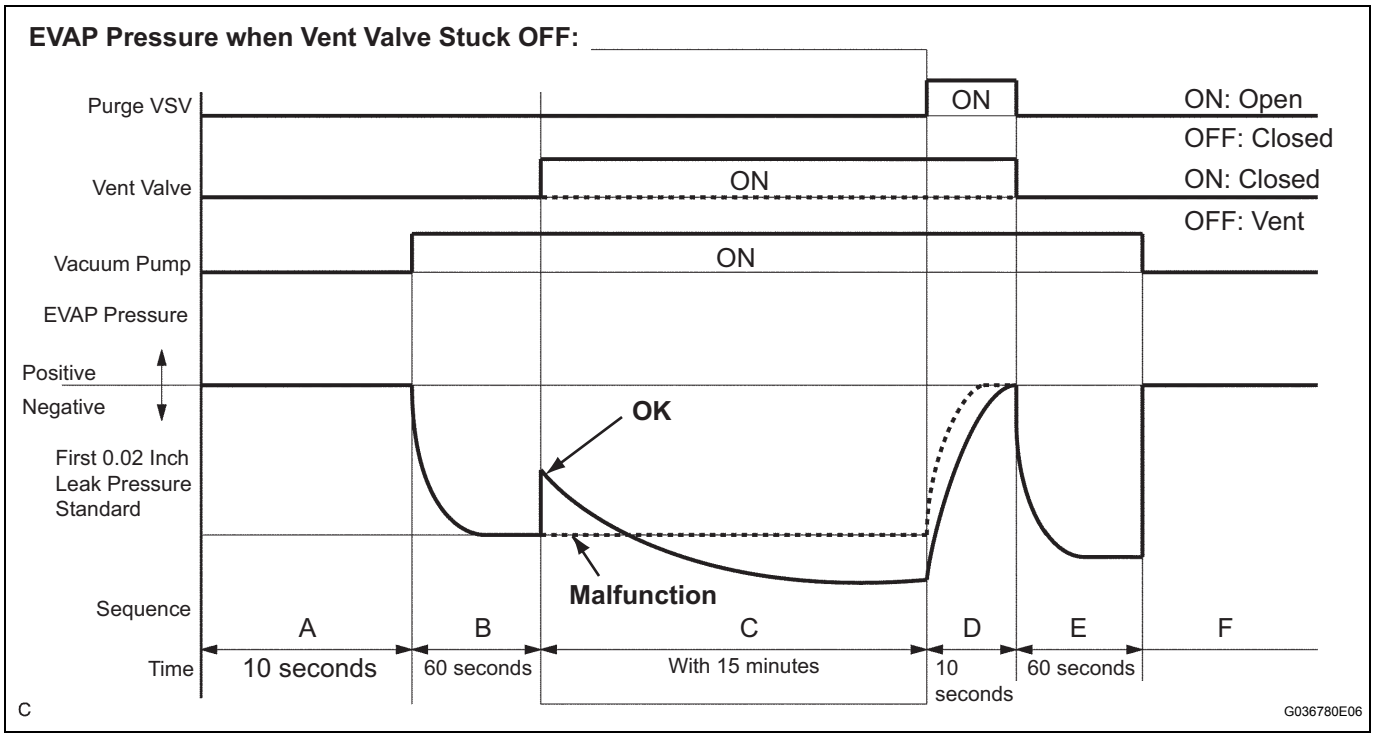

OBD II MONITOR SPECIFICATIONS

MONITOR STRATEGY

Required Sensors / Components	Purge VSV and pump module
Frequency of Operation	Once per driving cycle
Duration	Within 2 minutes
MIL Operation	2 driving cycles
Sequence of Operation	None

TYPICAL ENABLING CONDITIONS

The monitor will run whenever these DTCs are not present	None
Key-off monitor is run when all of the following conditions met	-
Atmospheric pressure	70 to 110 kPa (525 to 825 mmHg)
Battery voltage	10.5 V or more
Vehicle speed	2.5 mph (4 km/h) or less
Ignition switch	OFF
Time after key-off	5 or 7 or 9.5 hours
EVAP pressure sensor malfunction (P0450, P0452, P0453)	Not detected
EVAP canister purge valve	Not operated by scan tool
EVAP canister vent valve	Not operated by scan tool
EVAP leak detection pump	Not operated by scan tool

Both of the following conditions 1 and 2 set before key-off	-
1. Duration that vehicle has been driven	5 minutes or more
2. EVAP purge operation	Performed
ECT	4.4 to 35°C (40 to 95°F)
IAT	4.4 to 35°C (40 to 95°F)

Key-off monitor sequence 1 to 8

1. Atmospheric pressure measurement

Next sequence is run if the following condition is met	-
Atmospheric pressure change	Less than 0.3 kPa (2.25 mmHg) in 1 second

2. First reference pressure measurement

Next sequence is run if the following conditions are met	Condition 1, 2 and 3
1. EVAP pressure just after reference pressure measurement start	-1 kPa (-7.5 mmHg) or less
2. Reference pressure	-4.85 to -1.057 kPa (-36.384 to -7.929 mmHg)
3. Reference pressure	Saturated

3. EVAP canister vent valve close stuck check

Next sequence is run if the following condition is met	-
EVAP pressure change after vent valve is ON	0.3 kPa (2.25 mmHg) or more

4. Vacuum introduction

Next sequence is run if the following condition is met	-
EVAP pressure	Saturated within 15 minutes

5. EVAP canister purge valve close stuck check

Next sequence is run if the following condition is met	-
EVAP pressure change after purge valve is open	0.3 kPa (2.25 mmHg) or more

6. Second reference pressure measurement

Next sequence is run if the following conditions are met	Condition 1, 2, 3 and 4
1. EVAP pressure just after reference pressure	-1 kPa (-7.5 mmHg) or less
2. Reference pressure	-4.85 to -1.057 kPa (-36.384 to -7.929 mmHg)
3. Reference pressure	Saturated
4. Difference between first reference pressure and second reference pressure	Less than 0.7 kPa (5.25 mmHg)

7. Leak check

Next sequence is run if the following condition is met	-
EVAP pressure when vacuum introduction is complete	Lower than second reference pressure

8. Atmospheric pressure measurement

EVAP monitor is complete if the following condition is met	-
Atmospheric pressure difference between sequence 1 and 8	Within 0.3 kPa (2.25 mmHg)

TYPICAL MALFUNCTION THRESHOLDS

P2419: vent valve stuck closed

One of the following conditions met	-
EVAP pressure just after reference pressure measurement start	More than -1 kPa (-7.5 mmHg)
Reference pressure	Less than -4.85 kPa (-36.384 mmHg)
Reference pressure	-1.057 kPa (-7.929 mmHg) or more

Reference pressure	Not saturated
Difference between first reference pressure and second reference pressure	0.7 kPa (5.25 mmHg) or more

P2420: vent valve stuck open

EVAP pressure change after EVAP canister vent valve is ON	Less than 0.3 kPa (2.25 mmHg)

MONITOR RESULT

Refer to Monitor Result for detailed information (See page ES-25).

INSPECTION PROCEDURE

Refer to the EVAP System (See page ES-373).

DTC	P2610	ECM / PCM Internal Engine Off Timer Performance

DTC SUMMARY

DTCs	Monitoring Items	Malfunction Detection Conditions	Trouble Areas	Detection Timings	Detection Logic
P2610	Soak timer (built into ECM)	ECM internal malfunction	ECM	Engine running	2 trip

DESCRIPTION

ES

To ensure the accuracy of the EVAP (Evaporative Emission) monitor values, the soak timer, which is built into the ECM, measures 5 hours (+- 15 minutes) from when the ignition switch is turned off, before the monitor is run. This allows the fuel to cool down, which stabilizes the Fuel Tank Pressure (FTP). When 5 hours have elapsed, the ECM turns on.

Soak Timer Circuit:

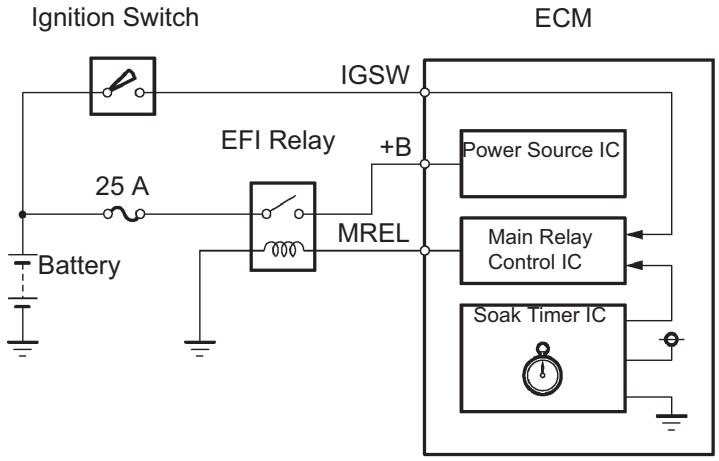

A133262E01

MONITOR DESCRIPTION

5 hours after the ignition switch is turned off, the soak timer activates the ECM to begin the EVAP system monitor. While the engine is running, the ECM monitors the synchronization of the soak timer and the CPU clock. If these two are not synchronized, the ECM interprets this as a malfunction, illuminates the MIL and sets the DTC (2 trip detection logic).

OBD II MONITOR SPECIFICATIONS

MONITOR STRATEGY

Required Sensors / Components	ECM
Frequency of Operation	Once per driving cycle
Duration	10 minutes
MIL Operation	2 driving cycles
Sequence of Operation	None

TYPICAL ENABLING CONDITIONS

The monitor will run whenever these DTCs are not present	None
Ignition switch	ON

Engine	Running
Battery voltage	8 V or more
Starter	OFF

TYPICAL MALFUNCTION THRESHOLDS

Soak timer measurement when ECM CPU clock counts 10 minutes	Less than 7 minutes or more than 13 minutes

INSPECTION PROCEDURE

HINT:

- DTC P2610 is set if an internal ECM problem is detected. Diagnostic procedures are not required.ECM replacement is required.
- Read freeze frame data using the intelligent tester. The ECM records vehicle and driving condition information as freeze frame data the moment a DTC is stored. When troubleshooting, freeze frame data can be helpful in determining whether the vehicle was running or stopped, whether the engine was warmed up or not, whether the air/fuel ratio was lean or rich, as well as other data recorded at the time of a malfunction.

1 REPLACE ECM

(a) Replace the ECM (See page ES-446).

NEXT

2 CHECK WHETHER DTC OUTPUT RECURS

(a) Connect the intelligent tester to the DLC3.
(b) Turn the ignition switch on (IG).
(c) Clear DTCs (See page ES-44).
(d) Start the engine and wait for 10 minutes or more.
(e) Select the following menu items on the tester: DIAGNOSIS / ENHANCED OBD II / DTC INFO / PENDING CODES.
(f) If no pending DTC is displayed, the repair has been successfully completed.
OK:
No DTC output.

NG → **CHECK FOR INTERMITTENT PROBLEMS**

OK

END

DTC	P2A00	A/F Sensor Circuit Slow Response (Bank 1 Sensor 1)

DTC	P2A03	A/F Sensor Circuit Slow Response (Bank 2 Sensor 1)

HINT:
- DTC P2A00 indicates malfunctions related to the bank 1 A/F sensor.
- DTC P2A03 indicates malfunctions related to the bank 2 A/F sensor.
- Bank 1 refers to the bank that includes cylinder No. 1.
- Bank 2 refers to the bank that includes cylinder No. 2.
- Sensor 1 refers to the sensor mounted in front of the Three-Way Catalytic Converter (TWC) and located near the engine assembly.

ES

DESCRIPTION

Refer to DTC P2195 (See page ES-313).

DTC No.	DTC Detection Conditions	Trouble Areas
P2A00 P2A03	Calculated value for air-fuel ratio (A/F) sensor response rate deterioration level is less than threshold	• Open or short in A/F sensor circuit • A/F sensor • ECM

MONITOR DESCRIPTION

After the engine is warmed up, the ECM performs air-fuel ratio feedback control to maintain the air-fuel ratio at the stoichiometric level. In addition, active A/F ratio control is performed for approximately 10 seconds after preconditions are met in order to measure the A/F sensor response rate. During active A/F ratio control, the ECM forcibly increases and decreases the injection volume to a certain amount, based on the stoichiometric air-fuel ratio learned during normal air-fuel ratio control, and measures the A/F sensor response rate. The ECM receives a signal from the A/F sensor while performing active A/F ratio control and uses it to calculate the A/F sensor response rate deterioration level.
If the value for A/F sensor response rate deterioration level is less than the threshold, the ECM interprets this as a malfunction and sets the DTC.

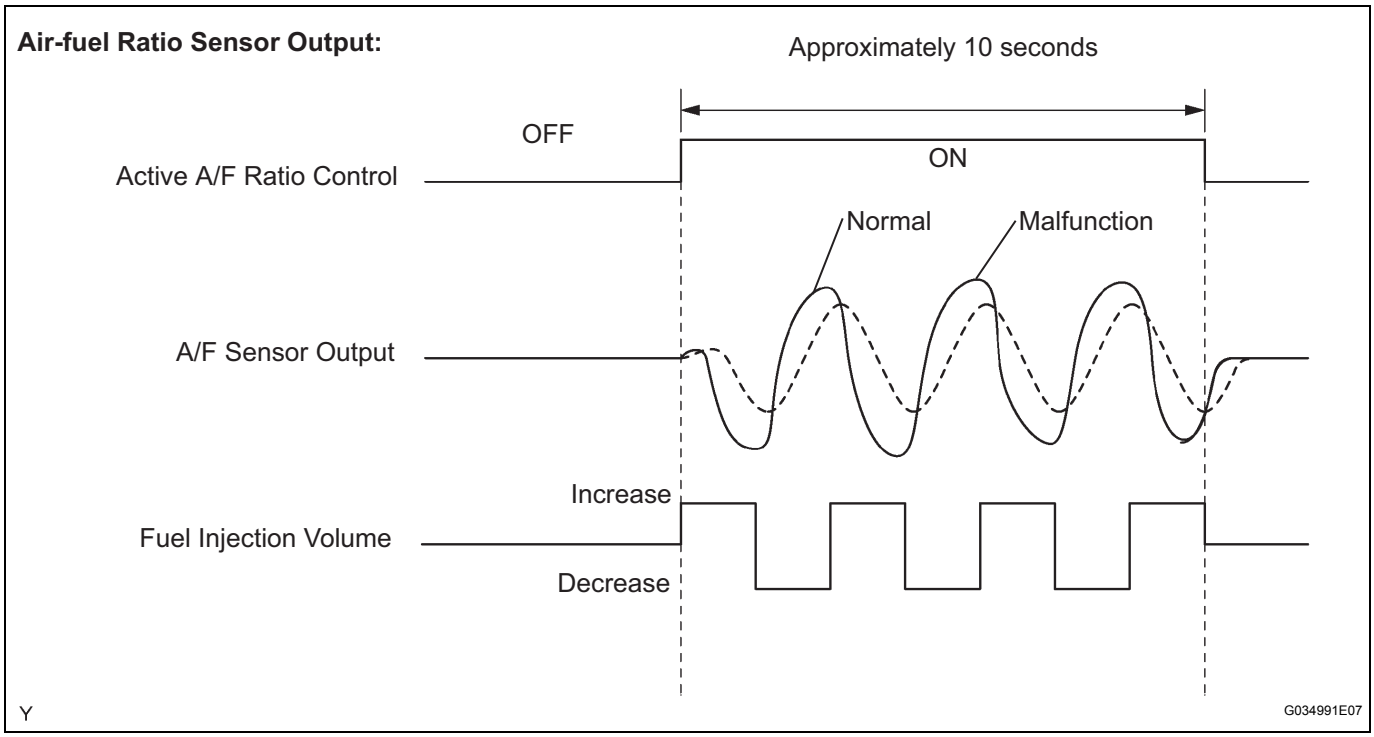

ES

CONFIRMATION DRIVING PATTERN

HINT:

Performing this confirmation pattern will activate the A/F sensor response monitor.

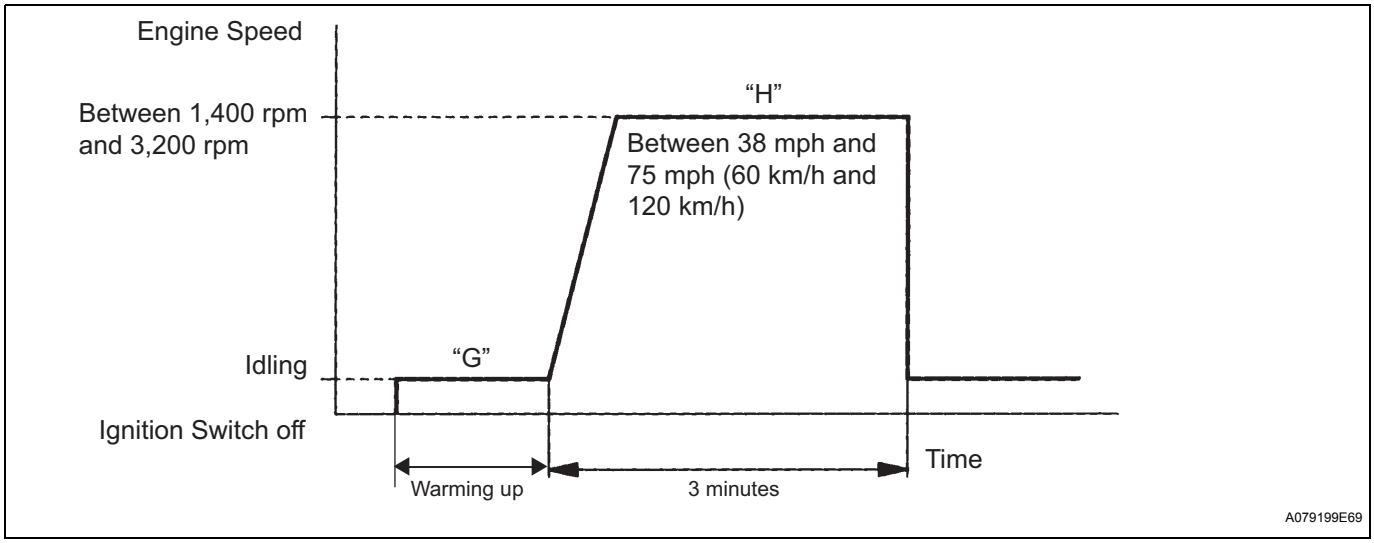

1. Connect the intelligent tester to the DLC3 (Procedure "A").

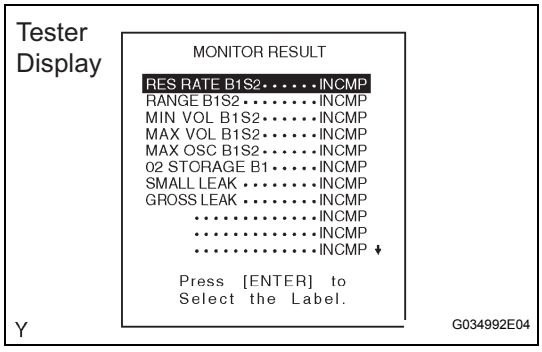

2. Turn the ignition switch on (IG) (Procedure "B").
3. Turn the tester on (Procedure "C").
4. Clear DTCs (where set) (Procedure "D").
5. Select the following menu items: DIAGNOSIS / ENHANCED OBD II / MONITOR INFO / MONITOR RESULT (Procedure "E").
6. Check that AFS B1 is INCOMPL (Procedure "F").
7. Start the engine and warm it up (Procedure "G").
8. Drive the vehicle at between 38 mph and 75 mph (60 km/h and 120 km/h) for 3 minutes. However, the vehicle should be driven at a constant speed (Procedure "H").
9. Check the monitor result values on the intelligent tester by selecting the following menu items: DIAGNOSIS / ENHANCED OBD II / MONITOR INFO / TEST RESULT (Procedure "I").
10. If the values indicated on the tester do not change, perform READINESS MONITOR DRIVE PATTERN for the A/F sensor and the heated oxygen sensor (See page ES-26) (Procedure "J").
    HINT:
    Completion of all A/F sensor monitors is required to change the value in TEST RESULT.
11. Note the value of the Monitor Result (Procedure "K").
12. Select the following menu items: DIAGNOSIS / ENHANCED OBD II / DTC INFO / PENDING CODES (Procedure "L").
13. Check if any DTCs (any pending DTCs) are set (Procedure "M").

ES

MONITOR STRATEGY

Related DTCs	P2A00: A/F sensor (Bank 1) slow response P2A03: A/F sensor (Bank 2) slow response
Required Sensors / Components (Main)	A/F sensor
Required Sensors / Components (Related)	Vehicle speed sensor, Crankshaft position sensor
Frequency of Operation	Once per driving cycle
Duration	10 to 15 seconds
MIL Operation	2 driving cycles
Sequence of Operation	None

TYPICAL ENABLING CONDITIONS

The monitor will run whenever these DTCs are not present	P0031, P0032, P0051, P0052 (A/F Sensor heater Sensor 1), P0100, P0101, P0102, P0103 (MAF Sensor), P0110, P0112, P0113 (IAT Sensor), P0115, P0116, P0117, P0118 (ECT Sensor), P0120, P0121, P0122, P0123, P0220, P0222, P0223, P2135 (TP Sensor), P0125 (Insufficient ECT for Closed Loop), P0171, P0172 (Fuel System), P0300, P0301, P0302, P0303, P0304, P0305, P0306 (Misfire), P0335 (CKP Sensor), P0340, P0342, P0343, P0345 (VVT Sensor 1, 2, P0450, P0451, P0452, P0453 (EVAP System), P0500 (VSS), P2196, P2198 (A/F Sensor (Rationality))
Active A/F control	Performing
Active A/F control is performed when the following conditions met	-
Engine coolant temperature	75°C (167°F) or more
Battery voltage	11 V or more
Fuel-cut	OFF
Engine RPM	Less than 4,000 rpm
A/F sensor status	Activated
Engine load	10 to 70%
Shift position	2 or more
Catalyst monitor	Not yet
Idle	OFF
Intake air amount	2.5 to 8.2 g/s

TYPICAL MALFUNCTION THRESHOLDS

Response rate deterioration level	Less than 0.2 V

MONITOR RESULT

Refer to Checking Monitor Status for detailed information (See page ES-25).

MID	TID	Scaling	Description of Test Value	Minimum Test Limit	Maximum Test Limit
$01	$8E	Multiply by 0.0003 [no dimension]	Response rate deterioration level for bank 1 sensor 1	Malfunction criterion for response rate deterioration	Maximum test limit

WIRING DIAGRAM

Refer to DTC P2195 (See page ES-317).

ES

INSPECTION PROCEDURE

HINT:

Malfunctioning areas can be identified by performing the A/F CONTROL function provided in the ACTIVE TEST. The A/F CONTROL function can help to determine whether the Air-Fuel Ratio (A/F) sensor, Heated Oxygen (HO2) sensor and other potential trouble areas are malfunctioning.

The following instructions describe how to conduct the A/F CONTROL operation using an intelligent tester.

(a) Connect the intelligent tester to the DLC3.

(b) Start the engine and turn the tester on.

(c) Warm up the engine at an engine speed of 2,500 rpm for approximately 90 seconds.

(d) Select the following menu items on the tester: DIAGNOSIS / ENHANCED OBD II / ACTIVE TEST / A/F CONTROL.

(e) Perform the A/F CONTROL operation with the engine in an idling condition (press the RIGHT or LEFT button to change the fuel injection volume).

(f) Monitor the voltage outputs of the A/F and HO2 sensors (AFS B1S1 and O2S B1S2 or AFS B2S1 and O2S B2S2) displayed on the tester.

HINT:

- The A/F CONTROL operation lowers the fuel injection volume by 12.5% or increases the injection volume by 25%.
- Each sensor reacts in accordance with increases and decreases in the fuel injection volume.

Standard voltage

Tester Display (Sensor)	Injection Volumes	Status	Voltages
AFS B1S1 or AFS B2S1 (A/F)	+25%	Rich	Less than 3.0
AFS B1S1 or AFS B2S1 (A/F)	-12.5%	Lean	More than 3.35
O2S B1S2 or O2S B2S2 (HO2)	+25%	Rich	More than 0.55
O2S B1S2 or O2S B2S2 (HO2)	-12.5%	Lean	Less than 0.4

NOTICE:

The Air-Fuel Ratio (A/F) sensor has an output delay of a few seconds and the Heated Oxygen (HO2) sensor has a maximum output delay of approximately 20 seconds.

Case	A/F Sensor (Sensor 1) Output Voltage		HO2 Sensor (Sensor 2) Output Voltage		Main Suspected Trouble Area
1	Injection Volume +25 % -12.5%		Injection Volume +25% -12.5%		-
	Output Voltage More than 3.35 V Less than 3.0 V	 OK	Output Voltage More than 0.55 V Less than 0.4 V	 OK	
2	Injection Volume +25% -12.5%		Injection Volume +25% -12.5%		• A/F sensor • A/F sensor heater • A/F sensor circuit
Output Voltage Almost no reaction	 NG	Output Voltage More than 0.55 V Less than 0.4 V	 OK		
3	Injection Volume +25% -12.5%		Injection Volume +25% -12.5%		• HO2 sensor • HO2 sensor heater • HO2 sensor circuit
	Output Voltage More than 3.35 V Less than 3.0 V	 OK	Output Voltage Almost no reaction	NG	
4	Injection volume +25% -12.5%		Injection Volume +25% -12.5%		• Injector • Fuel pressure • Gas leakage from exhaust system (Air-fuel ratio extremely lean or rich)
	Output Voltage Almost no reaction	NG	Output Voltage Almost no reaction	NG	

– Following the A/F CONTROL procedure enables technicians to check the graph of the voltage outputs of both the A/F and HO2 sensors.
– To display the graph, select the following menu items on the tester: DIAGNOSIS / ENHANCED OBD II / ACTIVE TEST / A/F CONTROL / USER DATA / AFS B1S1 and O2S B1S2 or AFS B2S1 and O2S B2S2. Press the YES button and then the ENTER button. Then press the F4 button.
HINT:
  • DTC P2A00 or P2A03 may be also set when the air-fuel ratio is stuck rich or lean.
  • A low A/F sensor voltage could be caused by a rich air-fuel mixture. Check for conditions that would cause the engine to run rich.
  • A high A/F sensor voltage could be caused by a lean air-fuel mixture. Check for conditions that would cause the engine to run lean.
  • Read freeze frame data using the intelligent tester. The ECM records vehicle and driving condition information as freeze frame data the moment a DTC is stored. When troubleshooting, freeze frame data can be helpful in determining whether the vehicle was running or stopped, whether the engine was warmed up or not, whether the air/fuel ratio was lean or rich, as well as other data recorded at the time of a malfunction.

1	CHECK ANY OTHER DTCS OUTPUT (IN ADDITION TO DTC P2A00 AND/OR P2A03)

(a) Connect the intelligent tester to the DLC3.
(b) Turn the ignition switch on (IG).
(c) Turn the tester on.
(d) Select the following menu items: DIAGNOSIS / ENHANCED OBD II / DTC INFO / CURRENT CODES.

(e) Read DTCs.

Result

Display (DTC Output)	Proceed to
P2A00 and/or P2A03	A
P2A00 and/or P2A03 and other DTCs	B

HINT:
If any DTCs other than P2A00 or P2A03 are output, troubleshoot those DTCs first.

B → **GO TO DTC CHART**

A

ES

2 INSPECT AIR FUEL RATIO SENSOR (HEATER RESISTANCE)

Component Side:

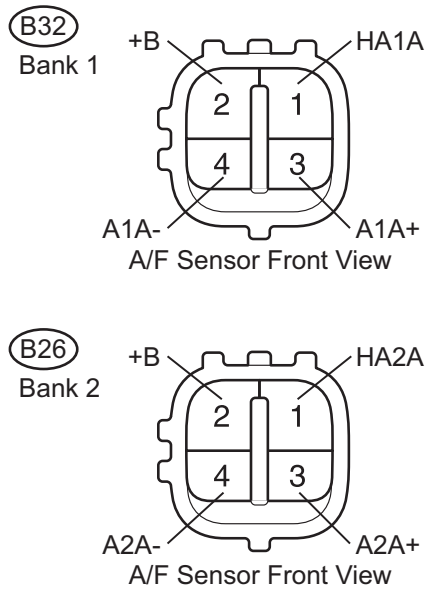

(a) Disconnect the B26 or B32 A/F sensor connector.
(b) Measure the resistance between the terminals of the A/F sensor connector.
Standard resistance:
Bank 1

Tester Connections	Specified Conditions
HA1A (1) - +B (2)	1.8 to 3.4 Ω at 20°C (68°F)
HA1A (1) - A1A- (4)	10 kΩ or higher

Bank 2

Tester Connections	Specified Conditions
HA2A (1) - +B (2)	1.8 to 3.4 Ω at 20°C (68°F)
HA2A (1) - A2A- (4)	10 kΩ or higher

(c) Reconnect the A/F sensor connector.

NG → **REPLACE AIR FUEL RATIO SENSOR**

OK

3	CHECK HARNESS AND CONNECTOR (A/F SENSOR - ECM)

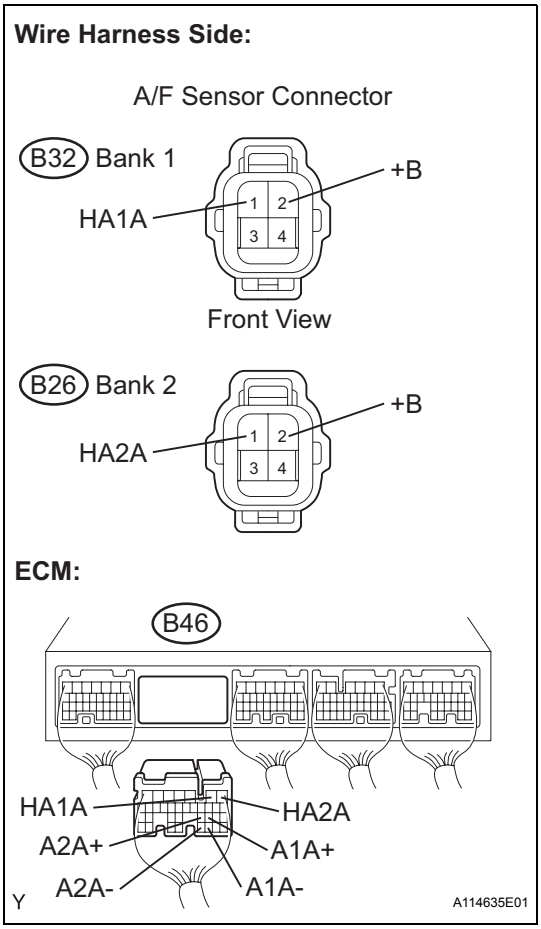

(a) Disconnect the B26 or B32 A/F sensor connector.
(b) Turn the ignition switch on (IG).
(c) Measure the voltage between the +B terminal of the A/F sensor connector and body ground.

Standard voltage

Tester Connections	Specified Conditions
+B (B32-2) - Body ground	9 to 14 V
+B (B26-2) - Body ground	9 to 14 V

(d) Turn the ignition switch off.
(e) Disconnect the B46 ECM connector.
(f) Measure the resistance between the terminals of the A/F sensor connector and ECM connector.

Standard resistance (Check for open)

Tester Connections	Specified Conditions
HA1A (B32-1) - HA1A (B46-2)	Below 1 Ω
A1A+ (B32-3) - A1A+ (B46-22)	Below 1 Ω
A1A- (B32-4) - A1A- (B46-30)	Below 1 Ω
HA2A (B26-1) - HA2A (B46-1)	Below 1 Ω
A2A+ (B26-3) - A2A+ (B46-23)	Below 1 Ω
A2A- (B26-4) - A2A- (B46-31)	Below 1 Ω

Standard resistance (Check for short)

Tester Connections	Specified Conditions
HA1A (B32-1) or HA1A (B46-2) - Body ground	10 kΩ or higher
A1A+ (B32-3) or A1A+ (B46-22) - Body ground	10 kΩ or higher
A1A- (B32-4) or A1A- (B46-30) - Body ground	10 kΩ or higher
HA2A (B26-1) or HA2A (B46-1) - Body ground	10 kΩ or higher
A2A+ (B26-3) or A2A+ (B46-23) - Body ground	10 kΩ or higher
A2A- (B26-4) or A2A- (B46-31) - Body ground	10 kΩ or higher

(g) Reconnect the ECM connector.
(h) Reconnect the A/F sensor connector.

Reference (System Diagram of Bank 1 Sensor 1):

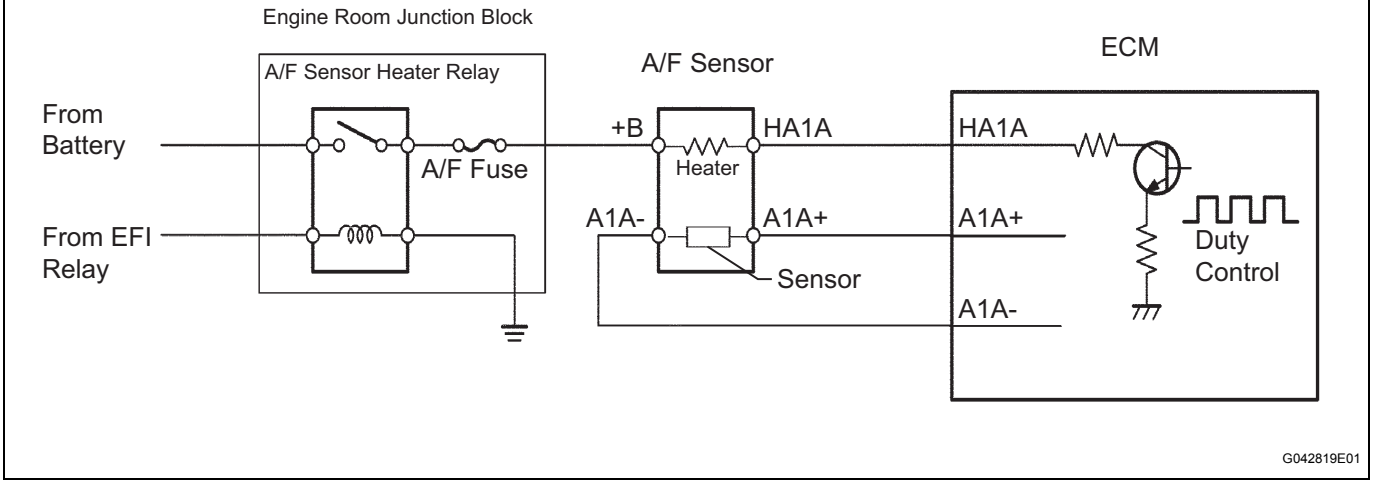

NG → REPAIR OR REPLACE HARNESS OR CONNECTOR

OK

4	PERFORM CONFIRMATION DRIVING PATTERN

NEXT

5	CHECK WHETHER DTC OUTPUT RECURS (DTC P2A00 AND/OR P2A03)

(a) Read DTCs using the intelligent tester.
(b) Select the following menu items: DIAGNOSIS / ENHANCED OBD II / DTC INFO / PENDING CODES.

Result

Display (DTC Output)	Proceed to
P2A00 and/or P2A03	A
No output	B

B → CHECK FOR INTERMITTENT PROBLEMS

A

6	REPLACE AIR FUEL RATIO SENSOR

(a) Replace the air fuel ratio sensor (See page EC-20).

NEXT

7	PERFORM CONFIRMATION DRIVING PATTERN

NEXT

8	CHECK WHETHER DTC OUTPUT RECURS (DTC P2A00 AND/OR P2A03)

(a) Read DTCs using the intelligent tester.
(b) Select the following menu items: DIAGNOSIS / ENHANCED OBD II / DTC INFO / PENDING CODES.

Result

Display (DTC Output)	Proceed to
No output	A
P2A00 and/or P2A03	B

B → CHECK EXTREMELY RICH OR LEAN ACTUAL AIR FUEL RATIO (REFER TO DTC P0171 PROCEDURE)

A

END

Active Control Engine Mount System

DESCRIPTION

LOCATION

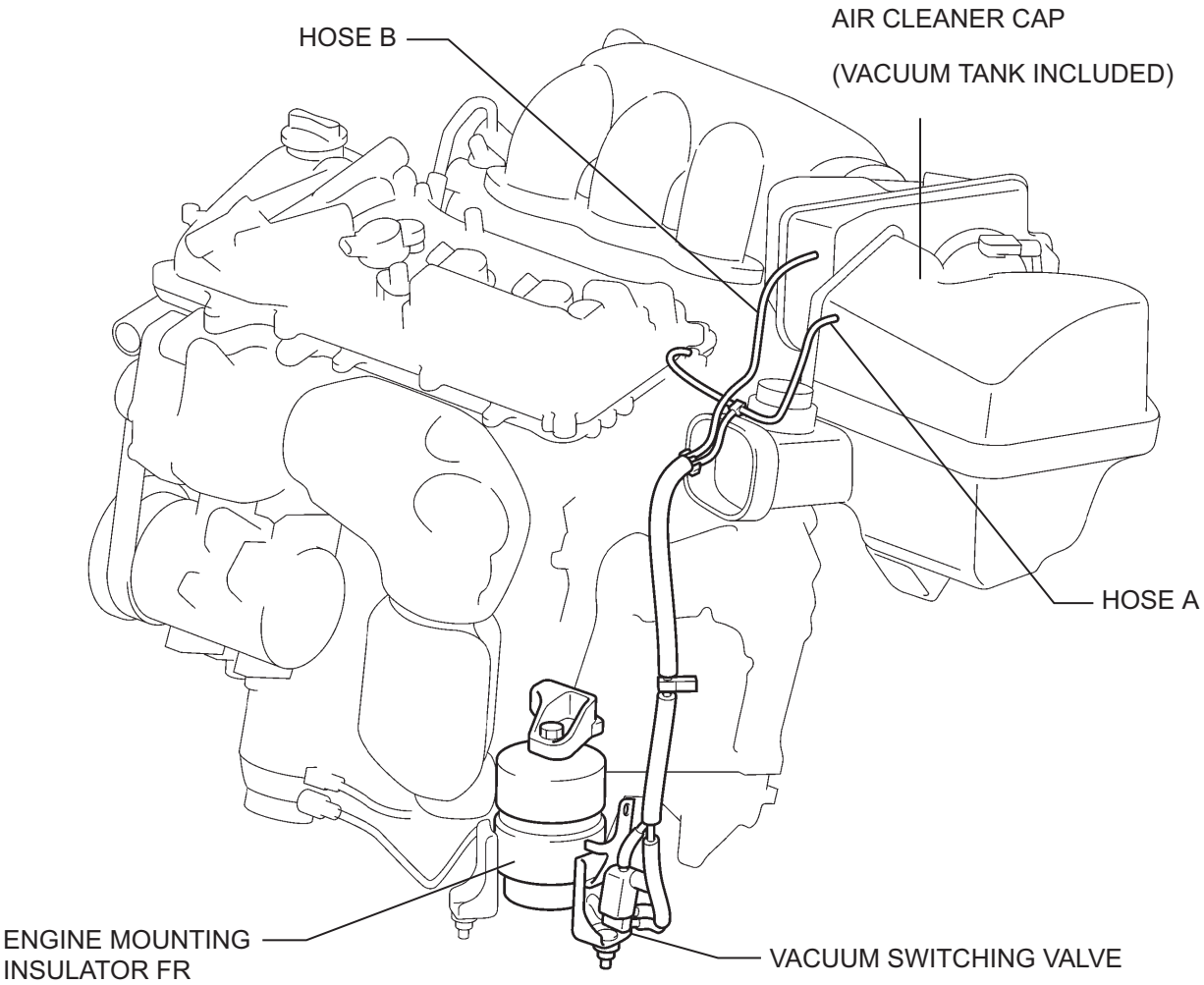

ENGINE ROOM R/B AND J/B:

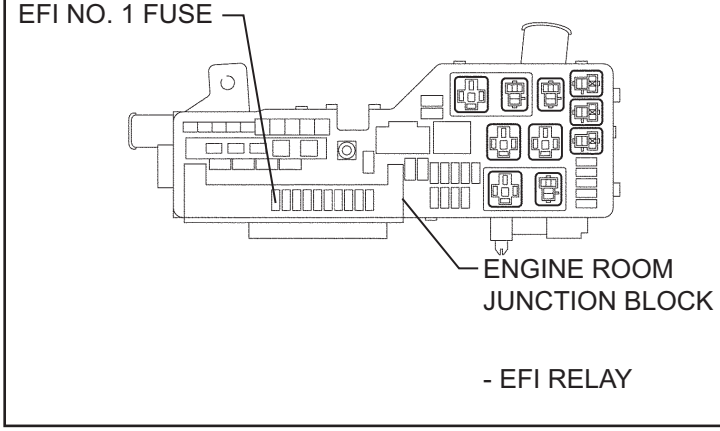

G042513E01

The Active Control Engine Mount (ACM) system decreases engine vibration at low engine speed using the ACM VSV. The VSV is controlled by a pulse signal transmitted to the VSV from the ECM. The frequency of this pulse signal is matched to the engine speed to decrease engine vibration.

WIRING DIAGRAM

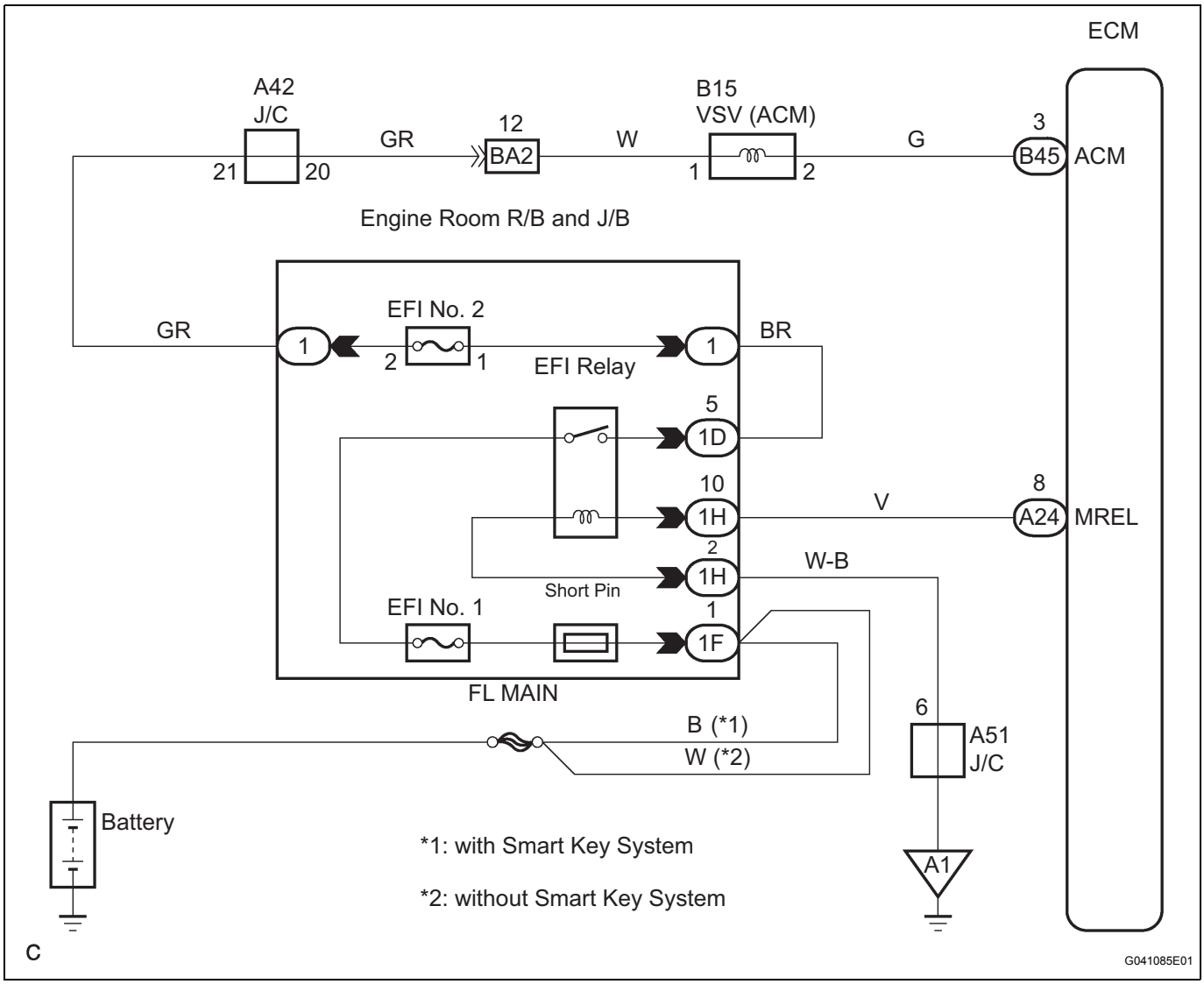

INSPECTION PROCEDURE

1	CHECK VACUUM HOSES

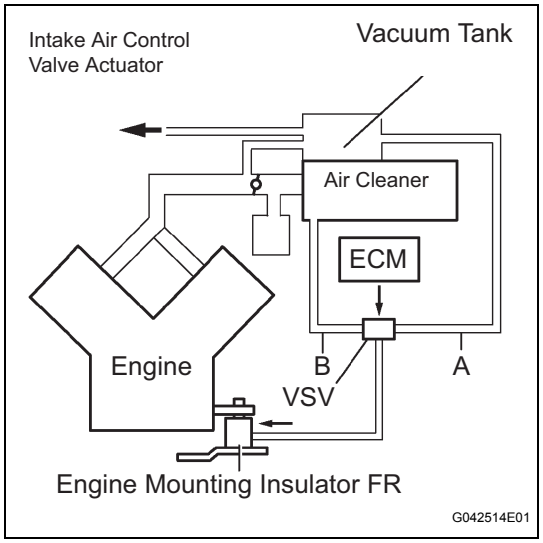

(a) If the hose is damaged, replace the vacuum hose assembly.
(b) Check the air and vacuum hoses for looseness, disconnection and blockage.

NG → **REPAIR OR REPLACE VACUUM HOSES**

OK

2	CHECK VACUUM

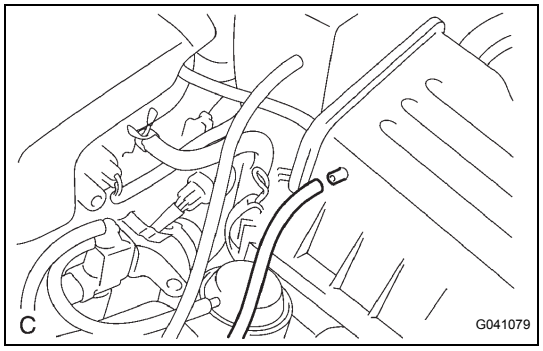

(a) Start the engine.
(b) Disconnect the vacuum hose from the air cleaner cap.
(c) Check that an unconnected port located on the vacuum tank applies suction to your finger.
OK:
Vacuum pressure exists
(d) Reconnect the vacuum hose.

NG → **CHECK AND REPLACE VACUUM SOURCE AND HOSES**

OK

3	INSPECT ECM

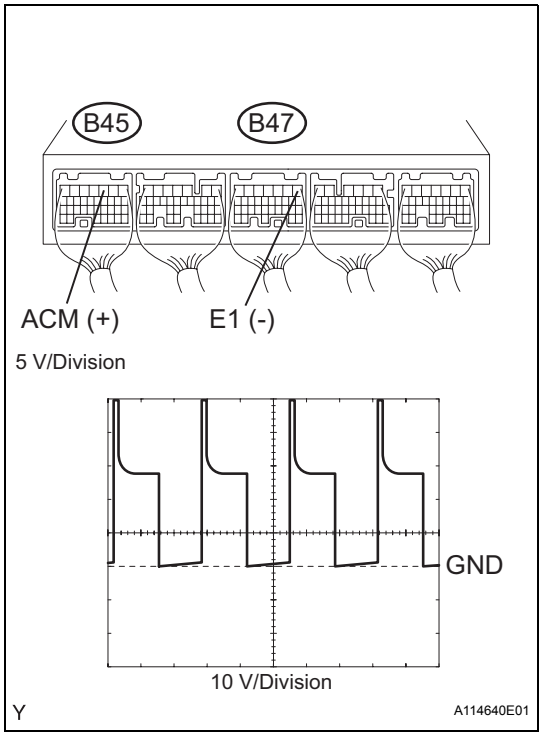

(a) Connect the oscilloscope between terminals ACM and E1 of the B45 and B47 ECM connectors.
(b) Warm up the engine to normal operating temperature.
(c) Turn the A/C switch on.
(d) Measure the voltage between terminals ACM and E1 of the ECM connectors.
Standard voltage

Condition	Voltage
Shift position is D, and engine speed is 850 rpm or less	Pulse generation
Shift position is D, and engine speed is 950 rpm or more	9 to 14 V
Shift position is P	9 to 14 V

OK → **Go to step 6**

NG

4	INSPECT DUTY VACUUM SWITCHING VALVE (RESISTANCE)

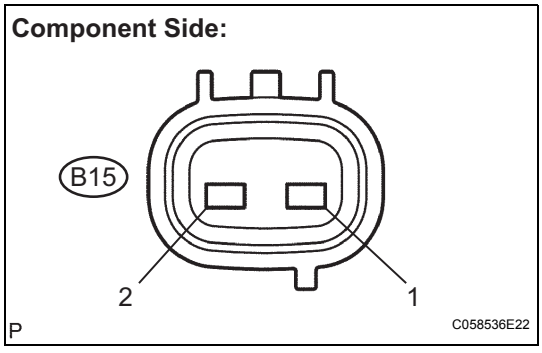

(a) Disconnect the B15 VSV for ACM connector.
(b) Measure the resistance between terminals 1 and 2.
Standard resistance:
19 to 21 Ω at 20°C (68°F)
(c) Reconnect the VSV for ACM connector.

NG → **REPLACE DUTY VACUUM SWITCHING VALVE**

OK

5	CHECK HARNESS AND CONNECTOR (VSV FOR ACM - ECM, VSV FOR ACM - EFI RELAY)

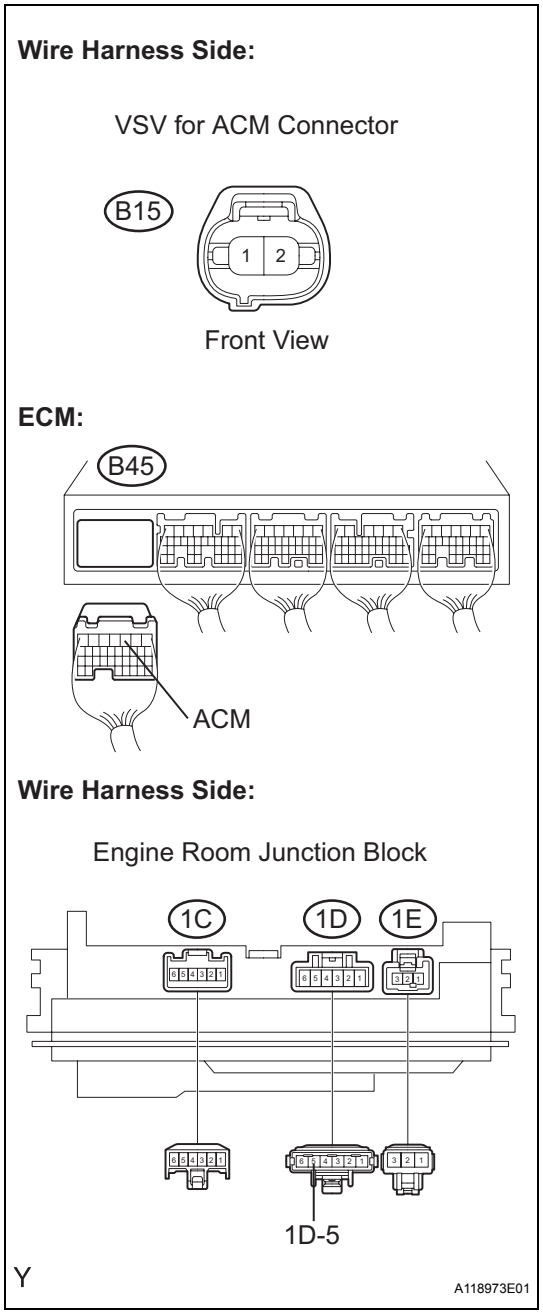

(a) Check the wire harness between the VSV for ACM connector and the ECM connector.
  (1) Disconnect the B15 VSV for ACM connector.
  (2) Disconnect the B45 ECM connector.
  (3) Measure the resistance between the wire harness side connectors.

Standard resistance (Check for open)

Tester Connections	Specified Conditions
VSV for ACM (B15-2) - ACM (B45-3)	Below 1 Ω

Standard resistance (Check for open)

Tester Connections	Specified Conditions
VSV for ACM (B15-2) or ACM (B45-3) - Body ground	10 kΩ or higher

  (4) Reconnect the ECM connector.

(b) Check the wire harness between the VSV for ACM and the EFI relay.
  (1) Remove the engine room junction block.
  (2) Measure the resistance between the wire harness side connectors.

Standard resistance (Check for open)

Tester Connections	Specified Conditions
VSV for ACM (B15-1) - engine room junction block (EFI relay) (1D-5)	Below 1 Ω

  (3) Reconnect the VSV for ACM connector.
  (4) Reinstall the engine room junction block.

NG → **REPAIR OR REPLACE HARNESS OR CONNECTOR**

OK

REPLACE ECM

ES

6	INSPECT DUTY VACUUM SWITCHING VALVE (OPERATION)

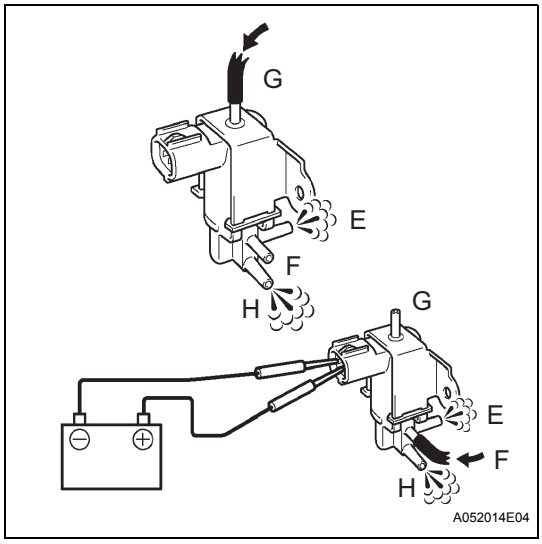

(a) Remove the VSV for ACM.
(b) Check operation of the VSV for ACM when positive battery voltage is applied to the terminals of the VSV for ACM connector.
Positive battery voltage is not applied:
The air from pipe G is flowing out through pipes E and H.
Positive battery voltage is applied:
The air from pipe F is flowing out through pipes E and H.
(c) Reinstall the VSV for ACM.

NG → **REPLACE DUTY VACUUM SWITCHING VALVE**

OK

7	INSPECT ENGINE MOUNTING INSULATOR ASSEMBLY FRONT

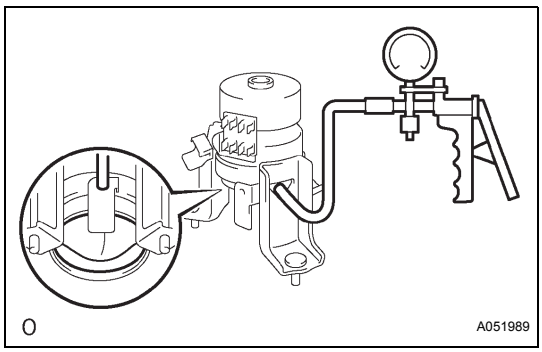

(a) Disconnect the vacuum hose from the front engine mount insulator.
(b) Using vacuum pump, apply vacuum of 80 kPa (600 mmHg, 25 in.Hg) and wait for 1 minute.
(c) Check that there is no change in the needle movement of the vacuum pump gauge.
(d) Check that there is no fluid leakage caused by a break in the diaphragm.
OK:
Vacuum pressure exists
(e) Reconnect the vacuum hose.

NG → **REPLACE ENGINE MOUNTING INSULATOR ASSEMBLY FRONT**

OK

SYSTEM OK

EVAP System

RELATED DTCS

DTCs	Monitoring Items	See procedure
P043E	0.02 inch orifice clogged (built into pump module)	ES-236
P043F	0.02 inch orifice high-flow (built into pump module)	
P0441	• Purge VSV (Vacuum Switching Valve) stuck closed • Purge VSV stuck open • Purge flow	ES-242
P0450	Pressure sensor (built into pump module) voltage abnormal fluctuation	ES-249
P0451	• Pressure sensor (built into pump module) noise • Pressure sensor (built into pump module) signal becomes fixed/flat	
P0452	Pressure sensor (built into pump module) voltage low	
P0453	Pressure sensor (built into pump module) voltage high	
P0455	EVAP gross leak	ES-257
P0456	EVAP small leak	
P2401	Vacuum pump stuck OFF (built into pump module)	ES-336
P2402	Vacuum pump stuck ON (built into pump module)	
P2419	Vent valve stuck ON (closed) (built into pump module)	ES-342
P2420	Vent valve stuck OFF (vent) (built into pump module)	
P2610	Soak timer (built into ECM)	ES-348

If any EVAP system DTCs are set, the malfunctioning area can be determined using the table below.

DTCs / Malfunctioning Areas	P043E P043F	P0441	P0450	P0451	P0452	P0453	P0455	P0456	P2401 P2402	P2419	P2420
0.02 inch orifice clogged	●								●	●	
0.02 inch orifice high-flow	●								●	●	
Purge VSV stuck open		●					●				
Purge VSV stuck closed		●									
Pressure sensor stuck				●							
Pressure sensor noise				●							
Pressure sensor low output			●		●						
Pressure sensor high output			●			●					
Gross leak		●					●				
Small leak								●			
Vacuum pump stuck OFF	●								●	●	
Vacuum pump stuck ON	●								●	●	
Vent valve stuck ON (closed)	●								●	●	
Vent valve stuck OFF (vent)											●

Y A106731E15

NOTICE:
If the 0.02 inch reference pressure difference between the first and second checks is greater than the specification, the DTCs corresponding to the reference pressure (P043E, P043F, P0441, P0455, P0456, P2401, P2420) will be all stored.

CONFIRMATION DRIVING PATTERN

HINT:
After a repair, check Monitor Status by performing the Key-Off Monitor Confirmation and Purge Flow Monitor Confirmation described below.

1. KEY-OFF MONITOR CONFIRMATION

(a) Preconditions
The monitor will not run unless:
(1) The vehicle has been driven for 10 minutes or more (in a city area or on a freeway)
(2) The fuel tank is less than 90% full
(3) The altitude is less than 8,000 ft (2,400 m)
(4) The Engine Coolant Temperature (ECT) is between 4.4°C and 35°C (40°F and 95°F)
(5) The Intake Air Temperature (IAT) is between 4.4°C and 35°C (40°F and 95°F)
(6) The vehicle remains stationary (the vehicle speed is 0 mph [0 km/h])

(b) Monitor Conditions
(1) Allow the engine to idle for at least 5 minutes.

(2) Turn the ignition switch off and wait for 6 hours (8 or 10.5 hours).
HINT:
Do not start the engine until checking MONITOR STATUS. If the engine is started, the steps described above must be repeated.

(c) Monitor Status
(1) Connect an intelligent tester to the DLC3.
(2) Turn the ignition switch on (IG) and turn the tester on.
(3) Select the following menu items: DIAGNOSIS / ENHANCED OBD II / MONITOR STATUS.
(4) Check the Monitor Status displayed on the tester.
HINT:
If INCMP is displayed, the monitor is not completed. Make sure that the preconditions have been met, and perform the Monitor Conditions again.

2. PURGE FLOW MONITOR CONFIRMATION (P0441)

HINT:
Perform this monitor confirmation after the Key-Off Monitor Confirmation shows COMPL (complete).

(a) Preconditions
The monitor will not run unless:
- The vehicle has been driven for 10 minutes or more (in a city area or on a freeway)
- The ECT is between 4.4°C and 35°C (40°F and 95°F)
- The IAT is between 4.4°C and 35°C (40°F and 95°F)

(b) Monitor Conditions
(1) Release the pressure from the fuel tank by removing and reinstalling the fuel tank cap.
(2) Warm the engine up until the ECT reaches more than 75°C (167°F).
(3) Increase the engine speed to 3,000 rpm once.
(4) Allow the engine to idle and turn the A/C ON for 1 minute.

(c) Monitor Status
(1) Turn the ignition switch off.
(2) Connect the intelligent tester to the DLC3.
(3) Turn the ignition switch to on (IG) and turn the tester on.
(4) Select the following menu items: DIAGNOSIS / ENHANCED OBD II / MONITOR STATUS.
(5) Check the Monitor Status displayed on the tester.
HINT:
If INCMP is displayed, the monitor is not completed. Make sure that the preconditions have been met, and perform the Monitor Conditions again.

MONITOR RESULT

Refer to Checking Monitor Status for detailed information (See page ES-25).
The test value and test limit information are described as shown in the following table. This information is included under MONITOR RESULT in the emissions-related DTC sections:
– MID (Monitor Identification Data) is assigned to each emissions-related component.
– TID (Test Identification Data) is assigned to each test value.
– Scaling is used to calculate the test value indicated on generic OBD II scan tools.

Thermostat

MID	TID	Scaling	Description of Test Value	Minimum Test Limit	Maximum Test Limit
$3D	$C9	Multiply by 0.01 [kPa]	Test value for small leak (P0456) Refer to pressure D*	Minimum test limit for small leak	Maximum test limit for small leak
$3D	$CA	Multiply by 0.01 [kPa]	Test value for gross leak (P0455) Refer to pressure E*	Minimum test limit for gross leak	Maximum test limit for gross leak
$3D	$CB	Multiply by 0.01 [kPa]	Test value for vacuum pump stuck OFF (P2401) Refer to pressure A*	Minimum test limit for vacuum pump stuck OFF	Maximum test limit for vacuum pump stuck OFF
$3D	$CD	Multiply by 0.01 [kPa]	Test value for vacuum pump stuck ON (P2402) Refer to pressure A*	Minimum test limit for vacuum pump stuck ON	Maximum test limit for vacuum pump stuck ON

MID	TID	Scaling	Description of Test Value	Minimum Test Limit	Maximum Test Limit
$3D	$CE	Multiply by 0.01 [kPa]	Test value for vent valve stuck OFF (vent) (P2420) Refer to pressure C*	Minimum test limit for vent valve stuck ON	Maximum test limit for vent valve stuck ON
$3D	$CF	Multiply by 0.01 [kPa]	Test value for vent valve stuck ON (P2419) Refer to pressure A*	Minimum test limit for vent valve stuck OFF	Maximum test limit for vent valve stuck OFF
$3D	$D0	Multiply by 0.01 [kPa]	Test value for 0.02 inch orifice low flow (P043E) Refer to pressure B*	Minimum test limit for 0.02 inch orifice low flow	Maximum test limit for 0.02 inch orifice low flow
$3D	$D1	Multiply by 0.01 [kPa]	Test value for 0.02 inch orifice high flow (P043F) Refer to pressure A*	Minimum test limit for 0.02 inch orifice high flow	Maximum test limit for 0.02 inch orifice high flow
$3D	$D4	Multiply by 0.01 [kPa]	Test value for purge VSV stuck close (P0441) Refer to pressure F*	Minimum test limit for purge VSV stuck closed	Maximum test limit for purge VSV stuck closed
$3D	$D5	Multiply by 0.01 [kPa]	Test value for purge VSV stuck open (P0441) Refer to pressure E*	Minimum test limit for purge VSV stuck open	Maximum test limit for purge VSV stuck open
$3D	$D7	Multiply by 0.01 [kPa]	Test value for purge flow (P0441) Refer to pressure G*	Minimum test limit for purge flow	Maximum test limit for purge flow

* Pressures A to G are indicated as shown in the diagram on the next page.

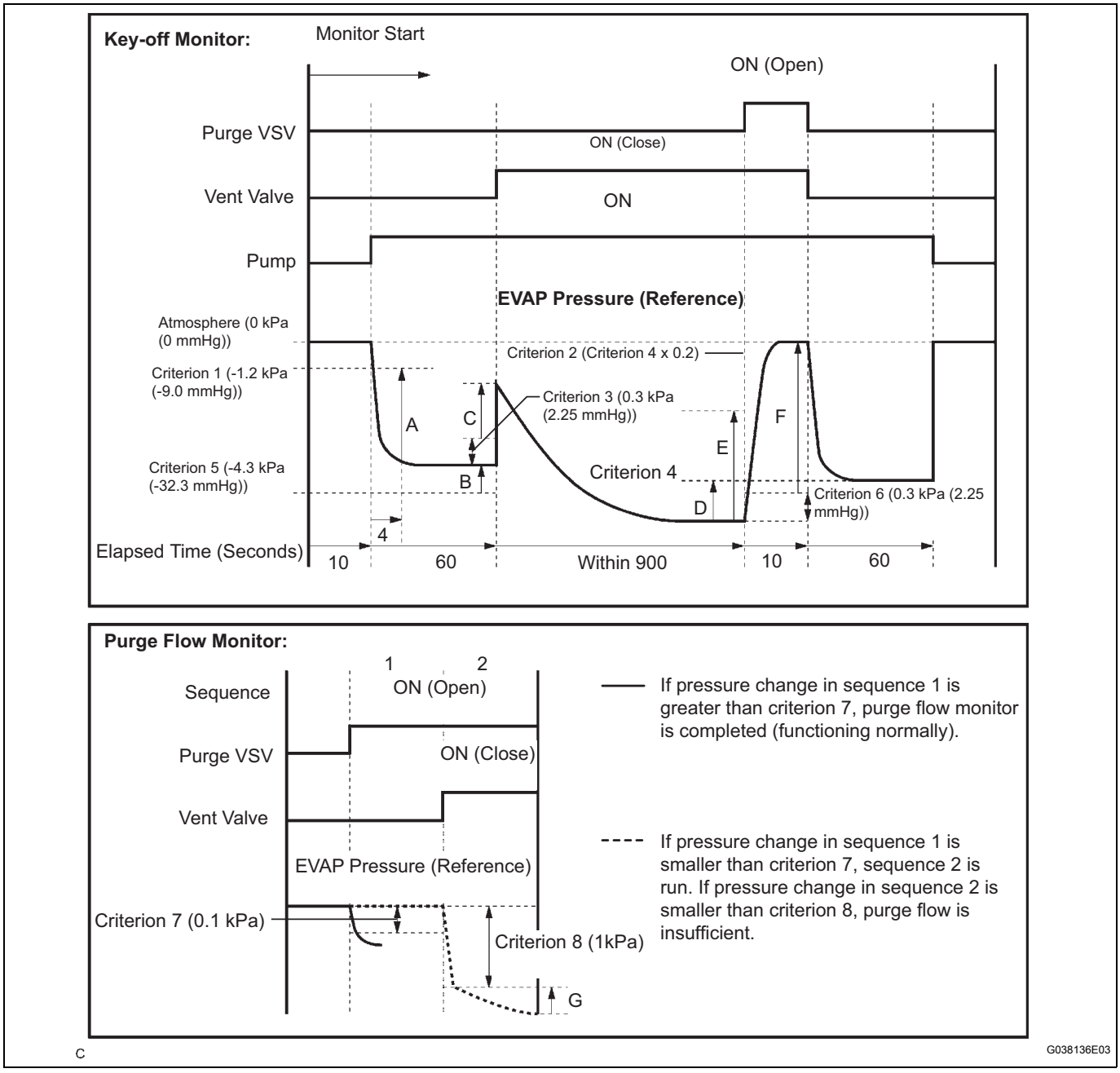

DESCRIPTION

Location of EVAP (Evaporative Emission) System:

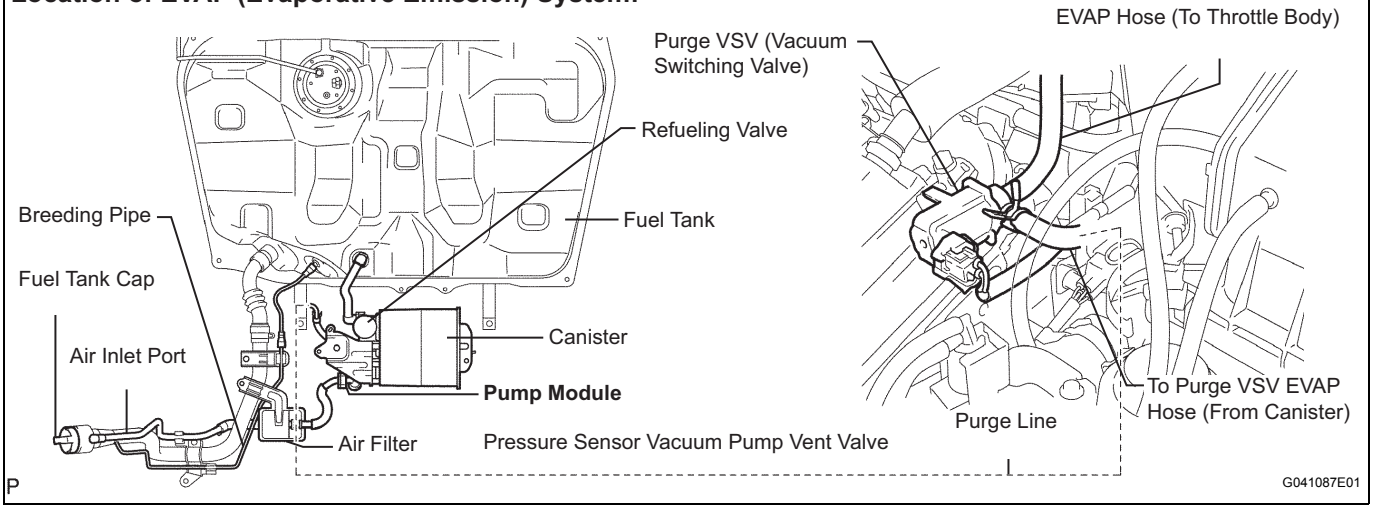

HINT:
The canister is located near the fuel tank, underneath the body.

EVAP System Circuit:

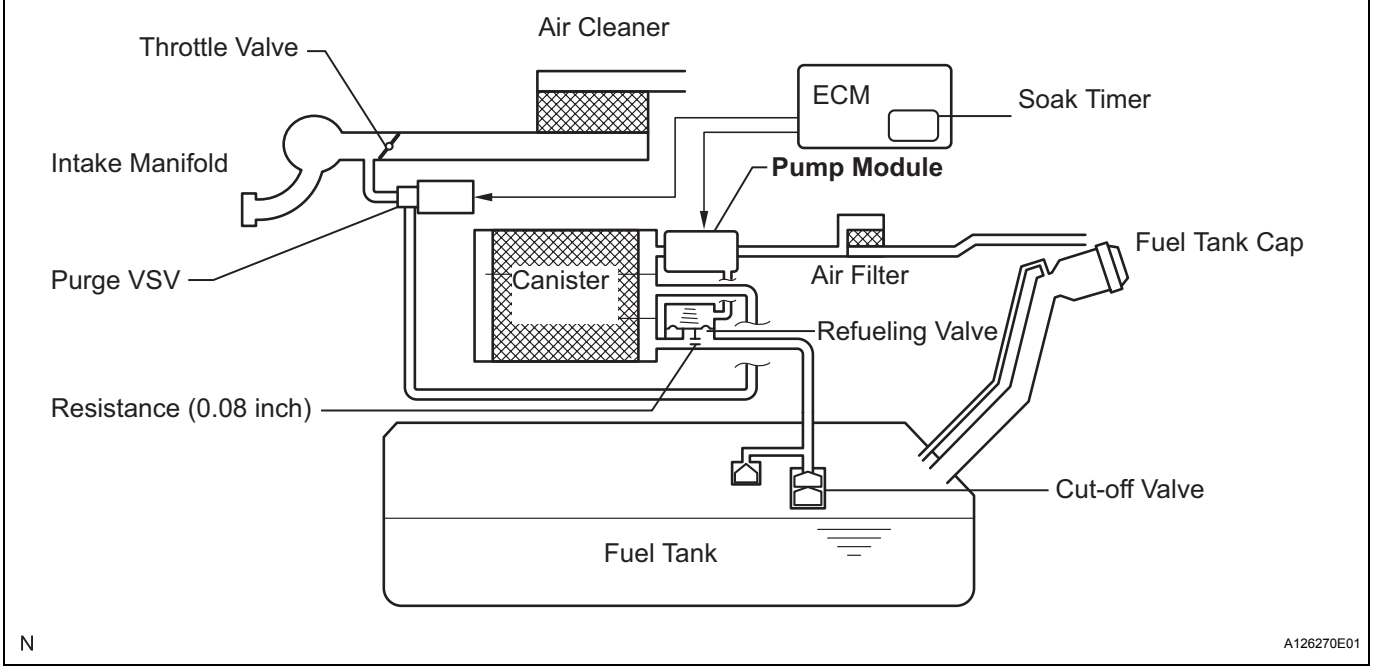

While the engine is running, if a predetermined condition (closed- loop, etc.) is met, the purge VSV is opened by the ECM and stored fuel vapors in the canister are purged to the intake manifold. The ECM changes the duty cycle ratio of the purge VSV to control purge flow volume.
The purge flow volume is also determined by the intake manifold pressure. Atmospheric pressure is allowed into the canister through the vent valve to ensure that the purge flow is maintained when the negative pressure (vacuum) is applied to the canister.
The following two monitors run to confirm appropriate EVAP system operation.

1. Key-off monitor

This monitor checks for EVAP (Evaporative Emission) system leaks and pump module malfunctions. The monitor starts 5 hours* after the ignition switch is turned off. More than 5 hours are required to allow the fuel to cool down to stabilize the Fuel Tank Pressure (FTP), thus making the EVAP system monitor more accurate.

The electric vacuum pump creates negative pressure (vacuum) in the EVAP system, and the pressure is measured. Finally, the ECM monitors for leaks from the EVAP system and malfunctions in both the pump module and purge VSV, based on the EVAP pressure.

HINT:

*: If the engine coolant temperature is not below 35°C (95°F) 5 hours after the ignition switch is turned off, the monitor check starts 2 hours later. If it is still not below 35°C (95°F) 7 hours after the ignition switch is turned off, the monitor check starts 2.5 hours later.

2. Purge flow monitor

The purge flow monitor consists of the two monitors. The 1st monitor is always conducted every time and the 2nd monitor is activated if necessary.

- The 1st monitor
  While the engine is running and the purge VSV (Vacuum Switching Valve) is ON (open), the ECM monitors the purge flow by measuring the EVAP pressure change. If negative pressure is not created, the ECM begins the 2nd monitor.
- The 2nd monitor
  The vent valve is turned OFF (open) and the EVAP pressure is then measured. If the variation in the pressure is less than 0.5 kPa (3.75 mmHg), the ECM interprets this as the purge VSV being stuck closed, and illuminates the MIL and sets DTC P0441 (2 trip detection logic).

Atmospheric pressure check:

In order to ensure reliable malfunction detection, the variation between the atmospheric pressures, before and after conduction of the purge flow monitor, is measured by the ECM.

EVAP Purge Flow:

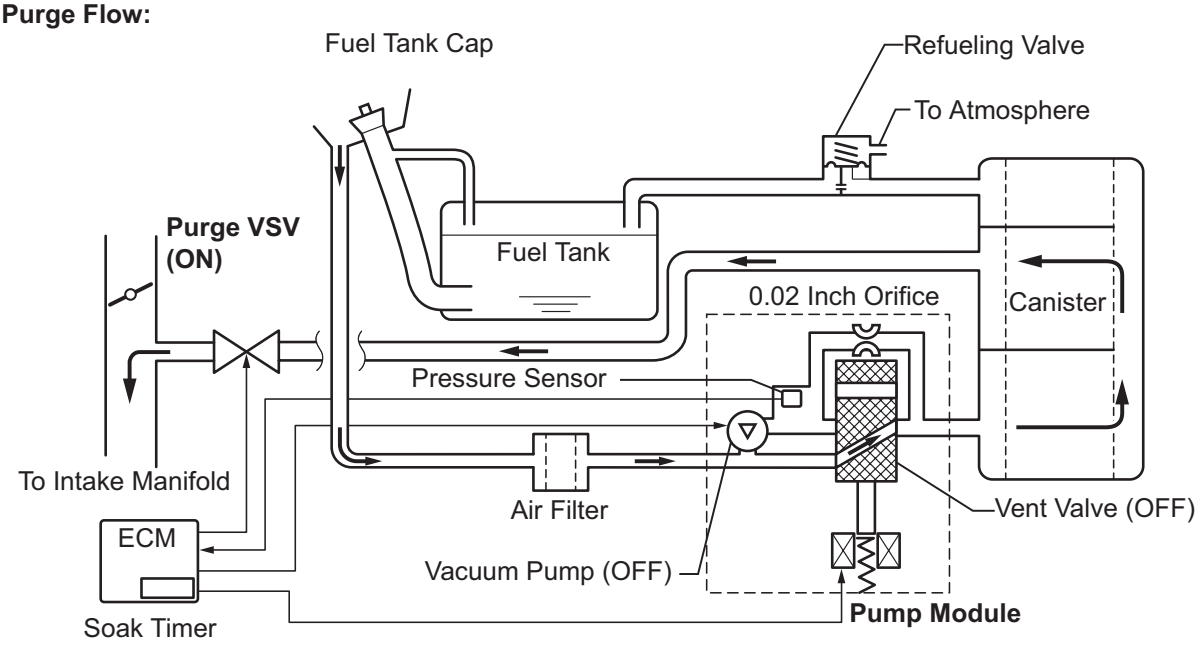

Components	Operations
Canister	Contains activated charcoal to absorb EVAP (Evaporative Emissions) generated in fuel tank.
Cut-off valve	Located in fuel tank. Valve floats and closes when fuel tank is 100% full.
Purge VSV (Vacuum Switching Valve)	Opens or closes line between canister and intake manifold. ECM uses purge VSV to control EVAP purge flow. In order to discharge EVAP absorbed by canister to intake manifold, ECM opens purge VSV. EVAP discharge volume to intake manifold is controlled by purge VSV duty cycle ratio (current-carrying time). (Open: ON, Close: OFF)

Components	Operations
Refueling valve	Controls EVAP pressure from fuel tank to canister. Valve consists of diaphragm, spring and restrictor (diameter: 0.08 inch). When fuel vapor and pressure inside fuel tank increase, valve opens. While EVAP is purged, valve closes and restrictor prevents a large amount of vacuum from affecting pressure in fuel tank. Valve is opened while refueling. When valve is open, adding fuel into fuel tank is possible.
Roll-over valve	Located in fuel tank. Valve closes by its own weight when vehicle overturns to prevent fuel from spilling out.
Service port	Used for connecting vacuum gauge for inspecting EVAP system.
Soak timer	Built into ECM. To ensure accurate EVAP monitor, measures 5 hours (+- 15 min.) after ignition switch turned off. This allows fuel to cool down, stabilizing Fuel Tank Pressure (FTP). When approx 5 hours elapsed, ECM activates.
Pump module	Consists of (a) to (d) below. Pump module cannot be disassembled.
(a) Vent valve	Vents and closes EVAP system. When ECM turns valve ON, EVAP system closed. When ECM turns valve OFF, EVAP system is vented. Negative pressure (vacuum) is created in EVAP system to check for EVAP leaks by closing purge VSV, vent valve (closed) and operating vacuum pump are turned on (refer to fig. 1).
(b) Pressure sensor	Indicates pressure as voltages. ECM supplies regulated 5 V to pressure sensor, and uses feedback from sensor to monitor EVAP system pressure (refer to fig 2).
(c) Vacuum pump	Creates negative pressure (vacuum) in EVAP system for leak check.
(d) 0.02 inch orifice	Has an opening with 0.02 inch diameter. Vacuum is produced through orifice by closing purge VSV, turning off vent valve and operating vacuum pump, to monitor 0.02 inch leak pressure. 0.02 inch leak pressure indicates a small leak of EVAP.

ES

Pump Module (fig. 1):

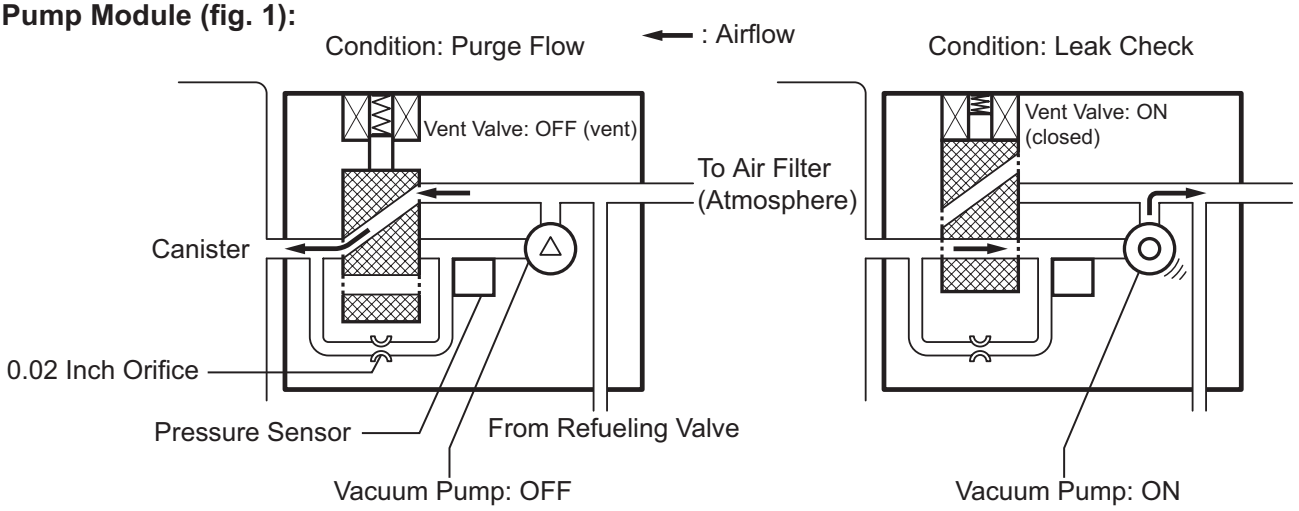

Pressure Sensor Specification (fig. 2):

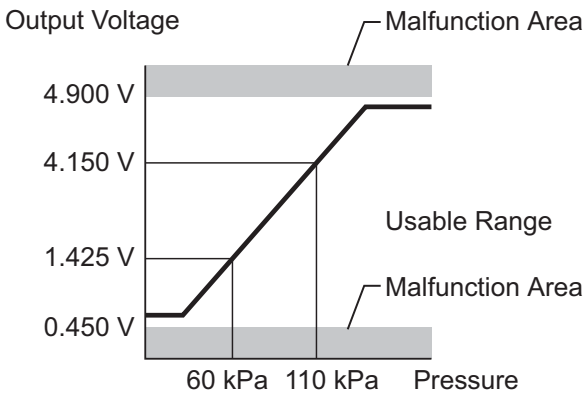

Soak Timer Circuit (fig. 3):

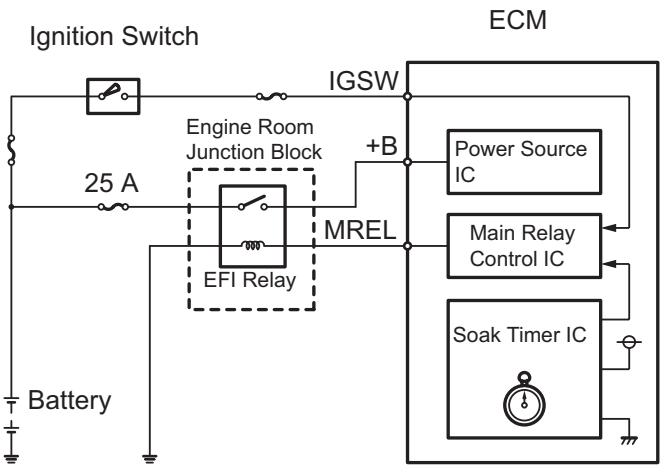

P

A118976E01

WIRING DIAGRAM

Refer to DTC P0450 (See page ES-252).

INSPECTION PROCEDURE

NOTICE:

An intelligent tester is required to conduct the following diagnostic troubleshooting procedure.

HINT:

- Using intelligent tester monitor results enables the EVAP (Evaporative Emission) system to be confirmed.
- Read freeze frame data using the intelligent tester. The ECM records vehicle and driving condition information as freeze frame data the moment a DTC is stored. When troubleshooting, freeze frame data can be helpful in determining whether the vehicle was running or stopped, whether the engine was warmed up or not, whether the air/fuel ratio was lean or rich, as well as other data recorded at the time of a malfunction.

1	CONFIRM DTC

(a) Turn the ignition switch OFF and wait for 10 seconds.
(b) Turn the ignition switch on (IG).
(c) Turn the ignition switch off and wait for 10 seconds.
(d) Connect the intelligent tester to the DLC3.
(e) Turn the ignition switch on (IG) and turn the tester on.
(f) Select the following menus: DIAGNOSIS / ENHANCED OBD II / DTC INFO / CURRENT CODES.
(g) Confirm DTCs and freeze frame data.
If any EVAP system DTCs are set, the malfunctioning area can be determined using the table below.

DTCs / Malfunctioning Areas	P043E P043F	P0441	P0450	P0451	P0452	P0453	P0455	P0456	P2401 P2402	P2419	P2420
0.02 inch orifice clogged	●								●	●	
0.02 inch orifice high-flow	●								●	●	
Purge VSV stuck open		●					●				
Purge VSV stuck closed		●									
Pressure sensor signal becomes fixed/flax				●							
Pressure sensor noise				●							
Pressure sensor voltage low			●		●						
Pressure sensor voltage high			●			●					
Gross leak		●					●				
Small leak								●			
Vacuum pump stuck OFF	●								●	●	
Vacuum pump stuck ON	●								●	●	
Vent valve stuck ON (closed)	●								●	●	
Vent valve stuck OFF (vent)											●

Y

A106731E16

NOTICE:
If the 0.02 inch reference pressure difference between the first and second checks is greater than the specification, the DTCs corresponding to the reference pressure (P043E, P043F, P0441, P0455, P0456, P2401 and P2420) will all be stored.

NEXT

2	**PERFORM EVAP SYSTEM CHECK (AUTO OPERATION)**

NOTICE:

- **In the EVAP SYSTEM CHECK (AUTO OPERATION), the series of 5 EVAP SYSTEM CHECK steps is performed automatically by the intelligent tester. It takes a maximum of approximately 18 minutes.**
- **Do not perform the EVAP SYSTEM CHECK when the fuel tank is more than 90% full because the cut-off valve may be closed and making the leak check of the fuel tank unavailable.**
- **Do not run the engine in this step.**

- **When the temperature of the fuel is 35°C (95°F) or more, a large amount of vapor forms and any check results become inaccurate. When performing the EVAP SYSTEM CHECK, keep the temperature below 35°C (95°F).**

(a) Connect the intelligent tester to the DLC3.
(b) Clear DTCs (See page ES-44).
(c) Select the following menu items on the tester: DIAGNOSIS / ENHANCED OBD II / SYSTEM CHECK / EVAP SYS CHECK / AUTO OPERATION.
(d) After the EVAP SYSTEM CHECK is completed, check for pending DTCs by selecting the following menu items: DIAGNOSIS / ENHANCED OBD II / DTC INFO / PENDING CODES.
HINT:
If no pending DTC is displayed, perform the Monitor Confirmation after this repair is completed. After this confirmation, check for pending DTCs. If no DTC is displayed, the EVAP system is normal.

ES

NEXT

3	PERFORM EVAP SYSTEM CHECK (MANUAL OPERATION)

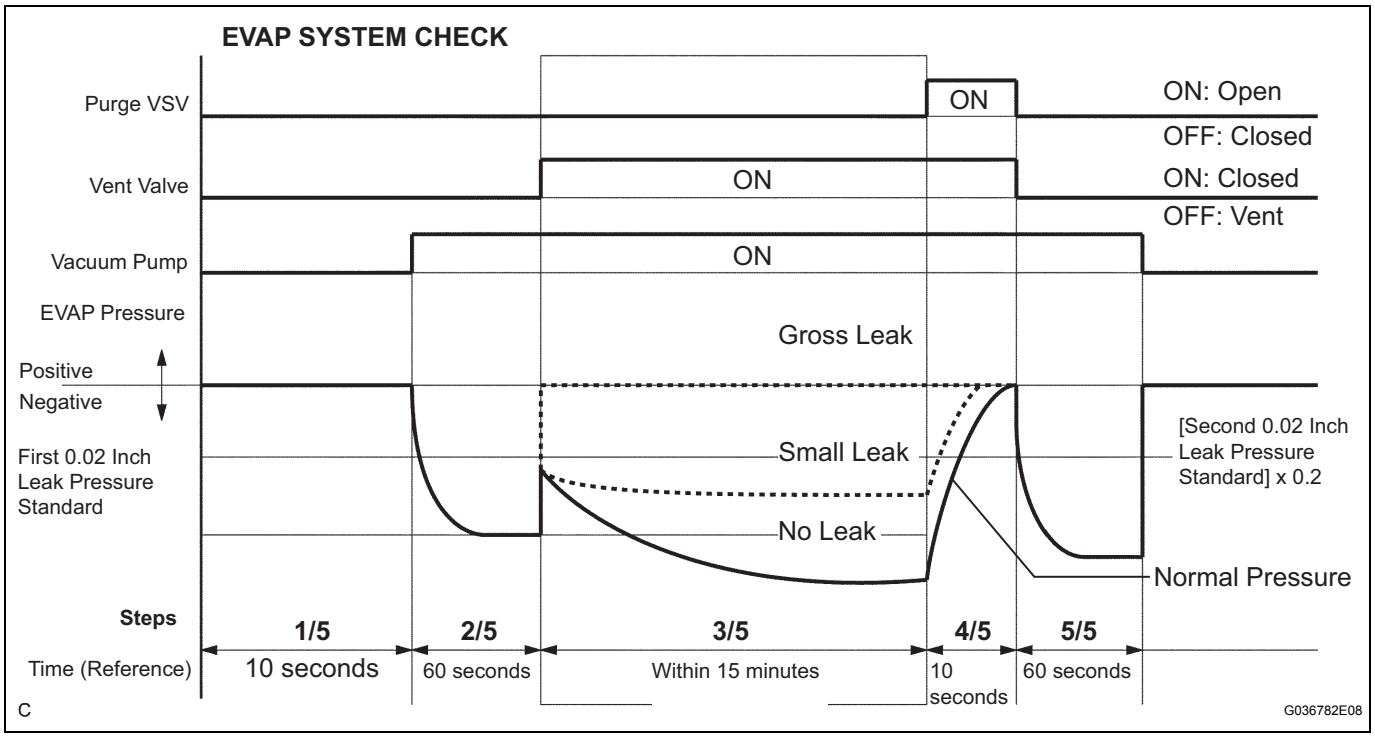

NOTICE:

- **In the EVAP SYSTEM CHECK (MANUAL OPERATION), the series of 5 EVAP SYSTEM CHECK steps is performed manually by the intelligent tester.**
- **Do not perform the EVAP SYSTEM CHECK when the fuel tank is more than 90% full because the cut-off valve may be closed and making the leak check of the fuel tank unavailable.**

- **Do not run the engine in this step.**
- **When the temperature of the fuel is 35°C (95°F) or more, a large amount of vapor forms and any check results become inaccurate. When performing the EVAP SYSTEM CHECK, keep the temperature below 35°C (95°F).**

(a) Connect the intelligent tester to the DLC3.
(b) Clear DTCs (See page ES-44).
(c) Select the following menu items: DIAGNOSIS / ENHANCED OBD II / SYSTEM CHECK / EVAP SYS CHECK / MANUAL OPERATION.

NEXT

ES

4	PERFORM EVAP SYSTEM CHECK (STEP 1/5)

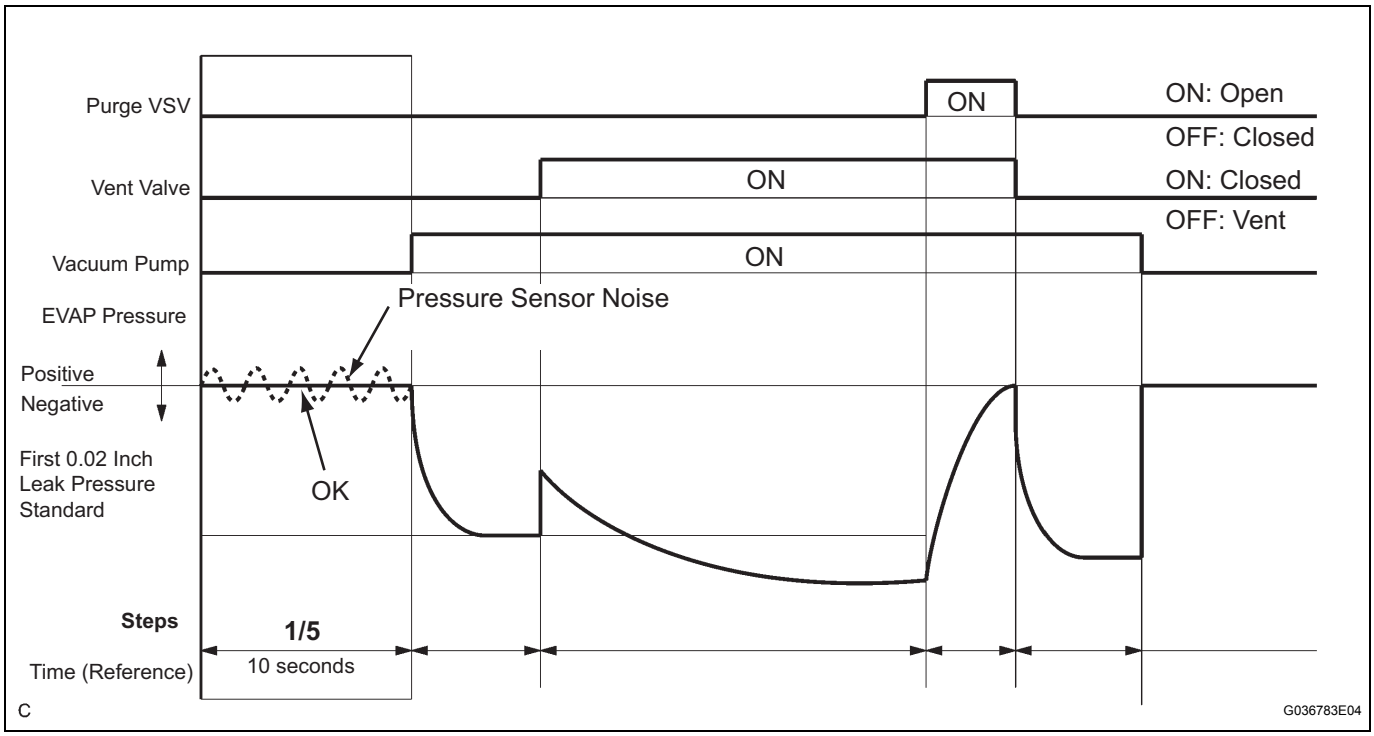

(a) Check the EVAP pressure in step 1/5.

Result

DTCs*	Test Results	Suspected Trouble Areas	Proceed to
-	Virtually no variation in EVAP pressure	Not yet determined	A
P0451	EVAP pressure fluctuates by +-0.3 kPa (2.25 mmHg) or more	Pressure sensor noising	B

*: The DTCs relating to the EVAP system displayed on the intelligent tester when checking.

B → Go to step 30

A

5	PERFORM EVAP SYSTEM CHECK (STEP 1/5 TO 2/5)

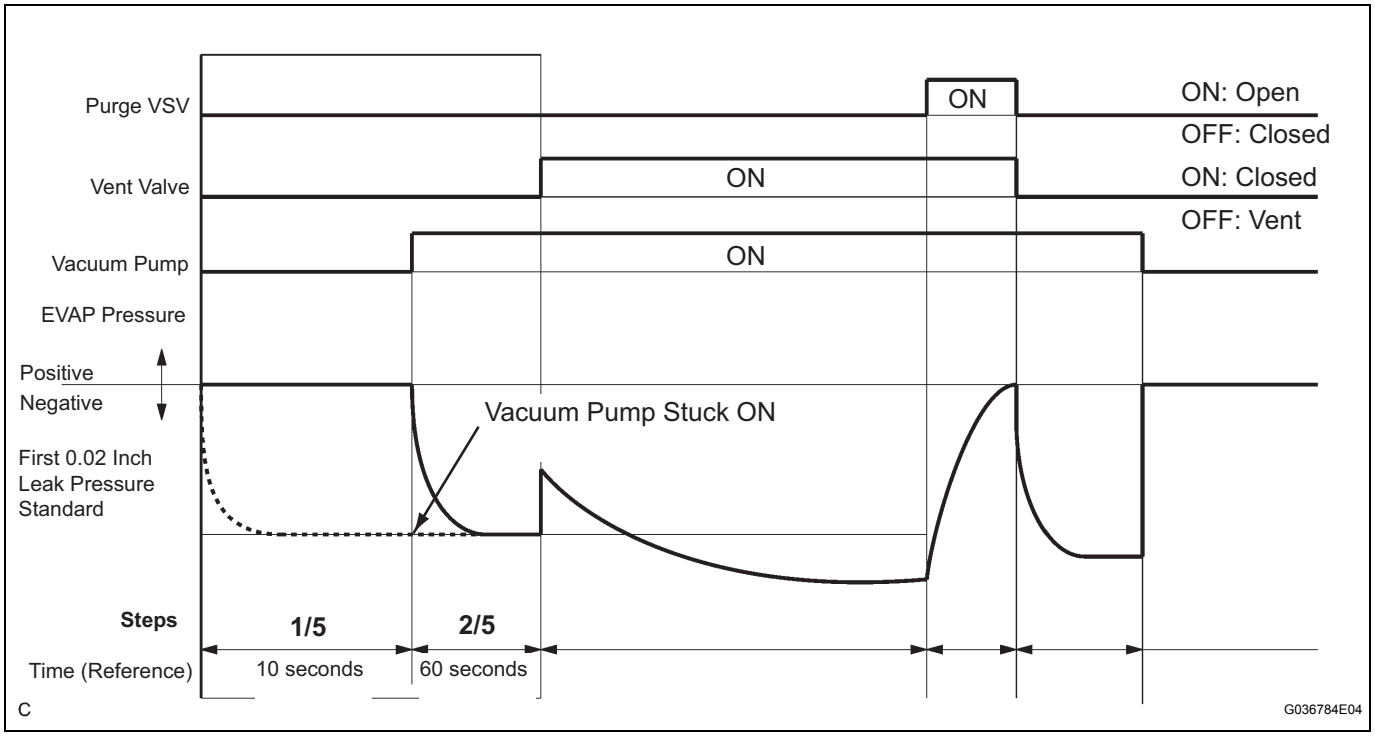

(a) Check the EVAP pressure in step 1/5 and 2/5.

Result

DTCs*	Test Results	Suspected Trouble Areas	Proceed to
-	Virtually no variation in EVAP pressure during step 1/5. Then decreases to 0.02 inch leak pressure standard*	Not yet determined	A
P2402	Small difference between EVAP pressures during steps 1/5 and 2/5	Vacuum pump stuck ON	B

*: The DTCs related to the EVAP system are displayed on the intelligent tester when checking.
HINT:
The first 0.02 inch leak pressure standard is the value determined in step 2/5.

B → Go to step 23

A

6	PERFORM EVAP SYSTEM CHECK (STEP 2/5)

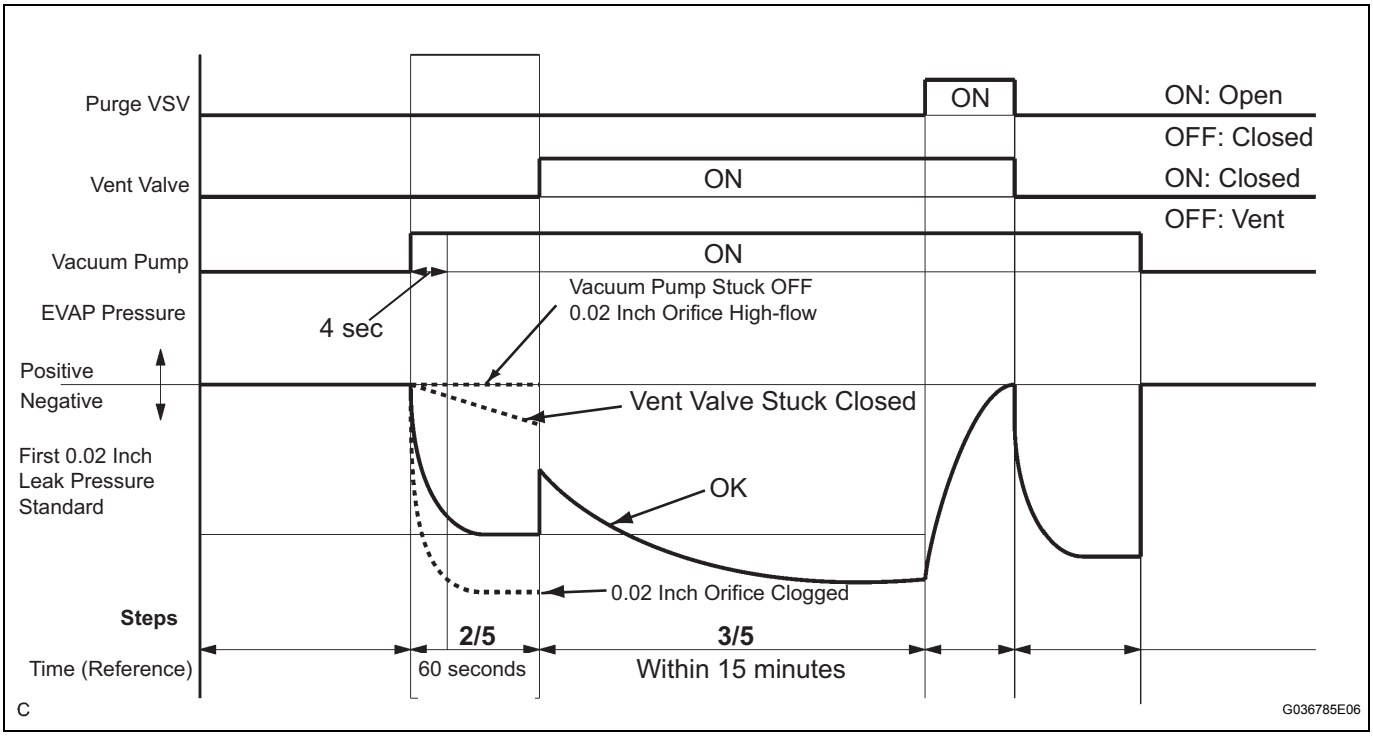

HINT:
Make a note of the pressures checked steps (a) and (b) below.

(a) Check the EVAP pressure 4 seconds after the vacuum pump is activated*1 (Step (a)).

(b) Check the EVAP pressure again when it has stabilized. This pressure is the 0.02 inch leak pressure standard (Step (b)).

*1: The vacuum pump begins to operate as step 1/5 is proceeded to step 2/5.

Result

DTCs*2	Test Results	Suspected Trouble Areas	Proceed to
-	EVAP pressure in step (b) is between -4.85 kPa and -1.06 kPa (-36.38 mmHg and -7.95 mmHg)	Not yet determined	A
P043F and P2401	EVAP pressure in step (b) is -1.06 kPa (-7.95 mmHg) or more	• 0.02 inch orifice high-flow • Vacuum pump stuck OFF	B
P043E	EVAP pressure in step (b) is than -4.85 kPa (-36.38 mmHg)	0.02 inch orifice clogged	C
P2419	EVAP pressure in step (a) is more than -1.06 kPa (-7.95 mmHg)	Vent valve stuck closed	D

*2: The DTCs related to the EVAP system displayed on the intelligent tester when checking.

B	Go to step 11
C	Go to step 30
D	Go to step 19

A

7	PERFORM EVAP SYSTEM CHECK (STEP 2/5 TO 3/5)

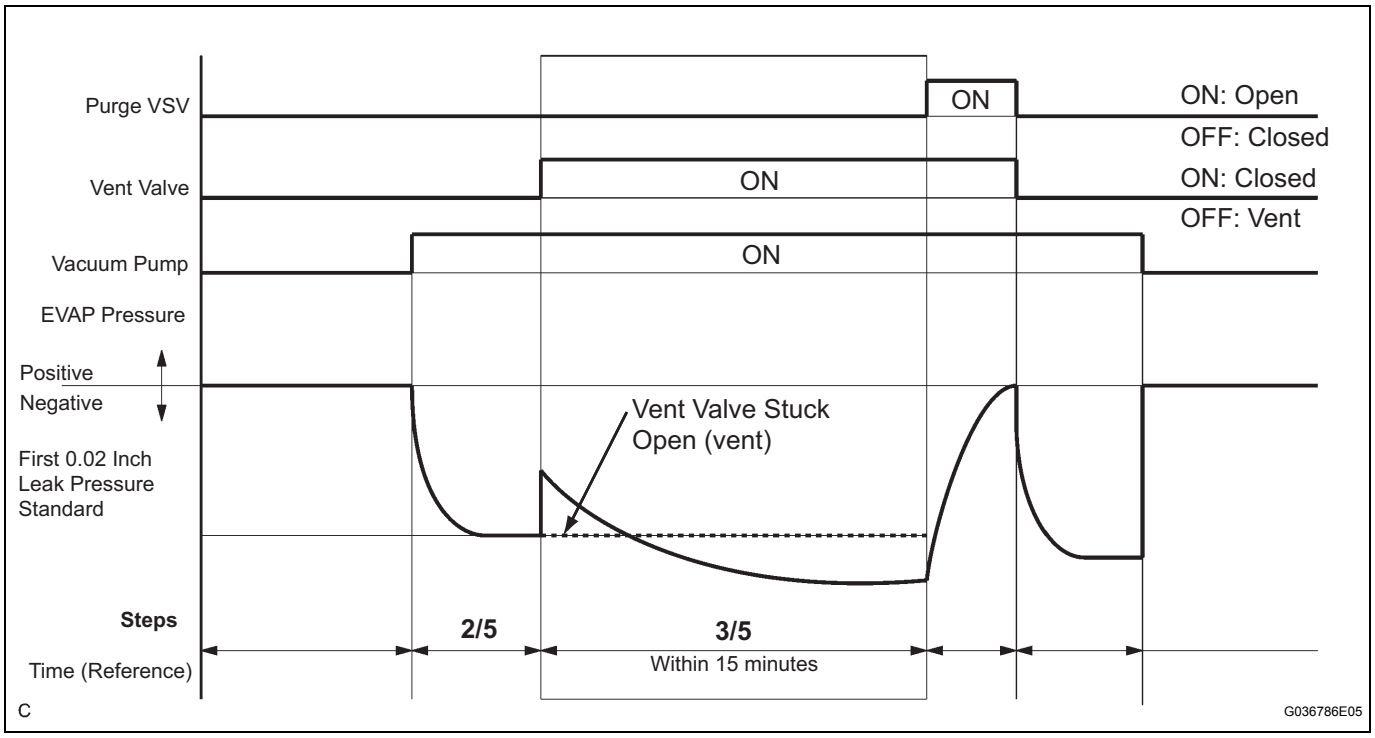

(a) Check the EVAP pressure increase in step 3/5.

Result

DTCs*	Test Results	Suspected Trouble Areas	Proceed to
-	EVAP pressure increases by 0.3 kPa (2.25 mmHg) or more within 10 seconds of proceeding from step 2/5 to step 3/5	Not yet determined	A
P2420	No variation in EVAP pressure even after proceeding from step 2/5 to step 3/5	Vent valve stuck open (vent)	B
P0451	No variation in EVAP pressure during steps 1/5 through 3/5	Pressure sensor malfunction	C

*: The DTCs related to the EVAP system displayed on the intelligent tester when checking.

B	Go to step 20
C	Go to step 30

A

ES

8	PERFORM EVAP SYSTEM CHECK (STEP 3/5)

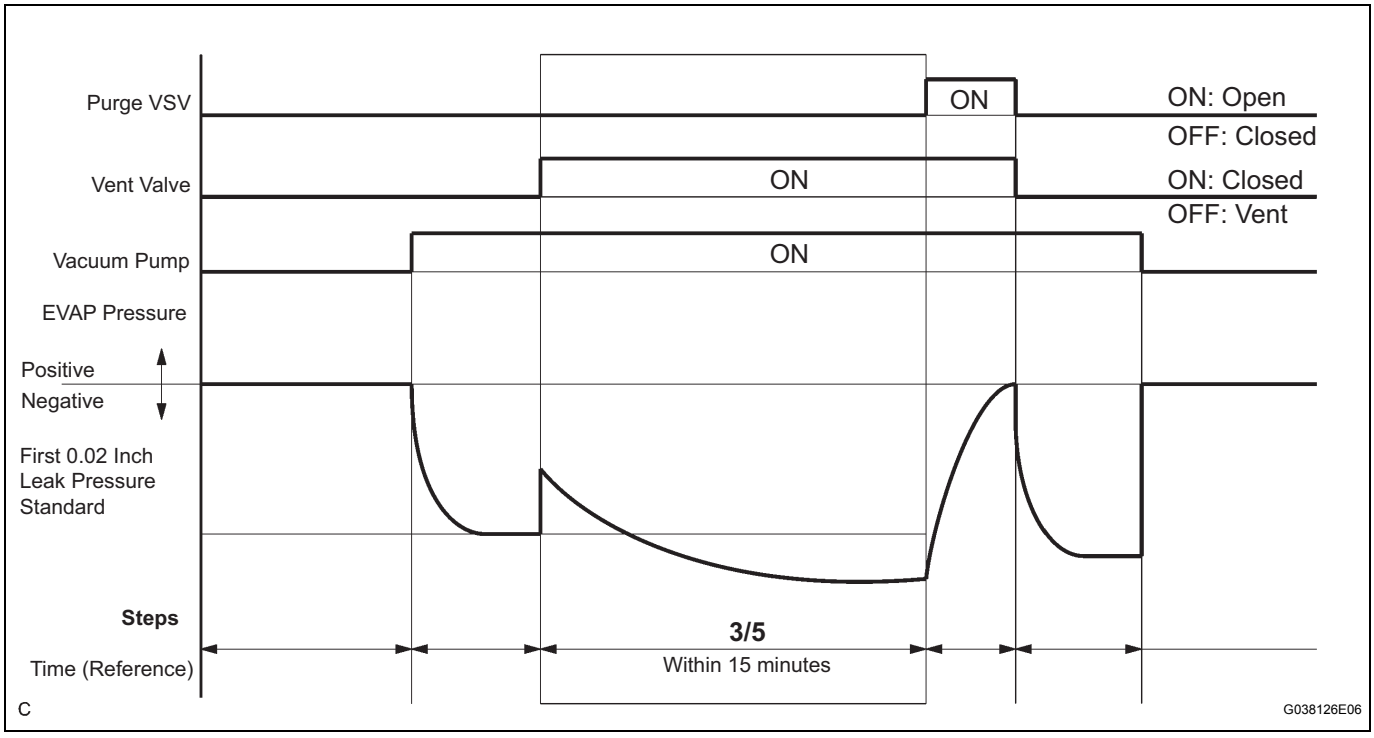

(a) Wait until the EVAP pressure change is less than 0.1 kPa (0.75 mmHg) for 30 seconds.

(b) Measure the EVAP pressure and record it.
HINT:
A few minutes are required for the EVAP pressure to become saturated. When there is little fuel in the fuel tank, it takes up to 15 minutes.

NEXT

9	PERFORM EVAP SYSTEM CHECK (STEP 4/5)

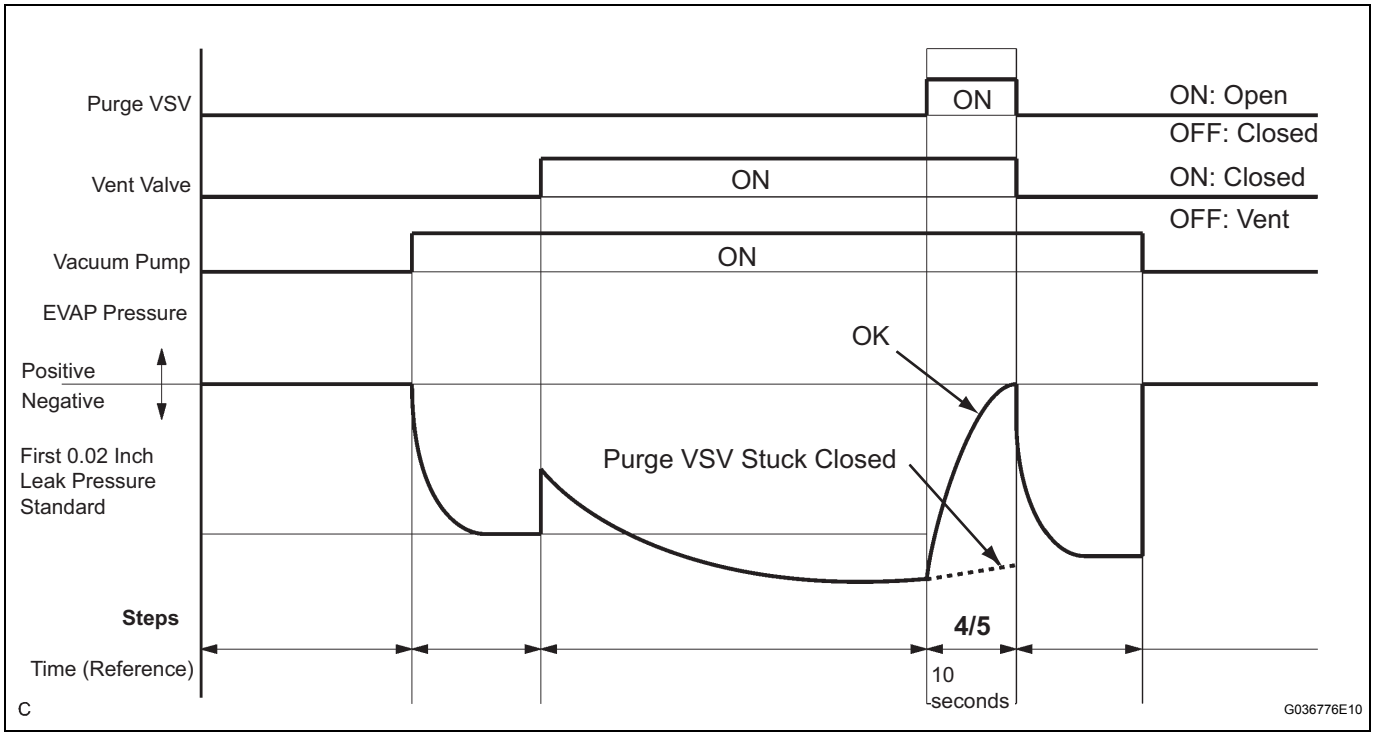

(a) Check the EVAP pressure in step 4/5.

Result

DTCs*	Test Results	Suspected Trouble Areas	Proceed to
-	EVAP pressure increases by 0.3 kPa (2.25 mmHg) or more within 10 seconds of proceeding from step 3/5 to step 4/5	Not yet determined	A
P0441	EVAP pressure increases by 0.3 kPa (2.25 mmHg) or more within 10 seconds of proceeding from step 3/5 to step 4/5	Problems in EVAP hose between pure VSV and intake manifold	B
P0441	Variation in EVAP pressure less than 0.3 kPa (2.25 mmHg) for 10 seconds, after proceeding from step 3/5 to step 4/5	Purge VSV stuck closed	C

*: The DTCs related to the EVAP system displayed on an intelligent tester when checking.

B → Go to step 15

C → Go to step 12

A

10	PERFORM EVAP SYSTEM CHECK (STEP 5/5)

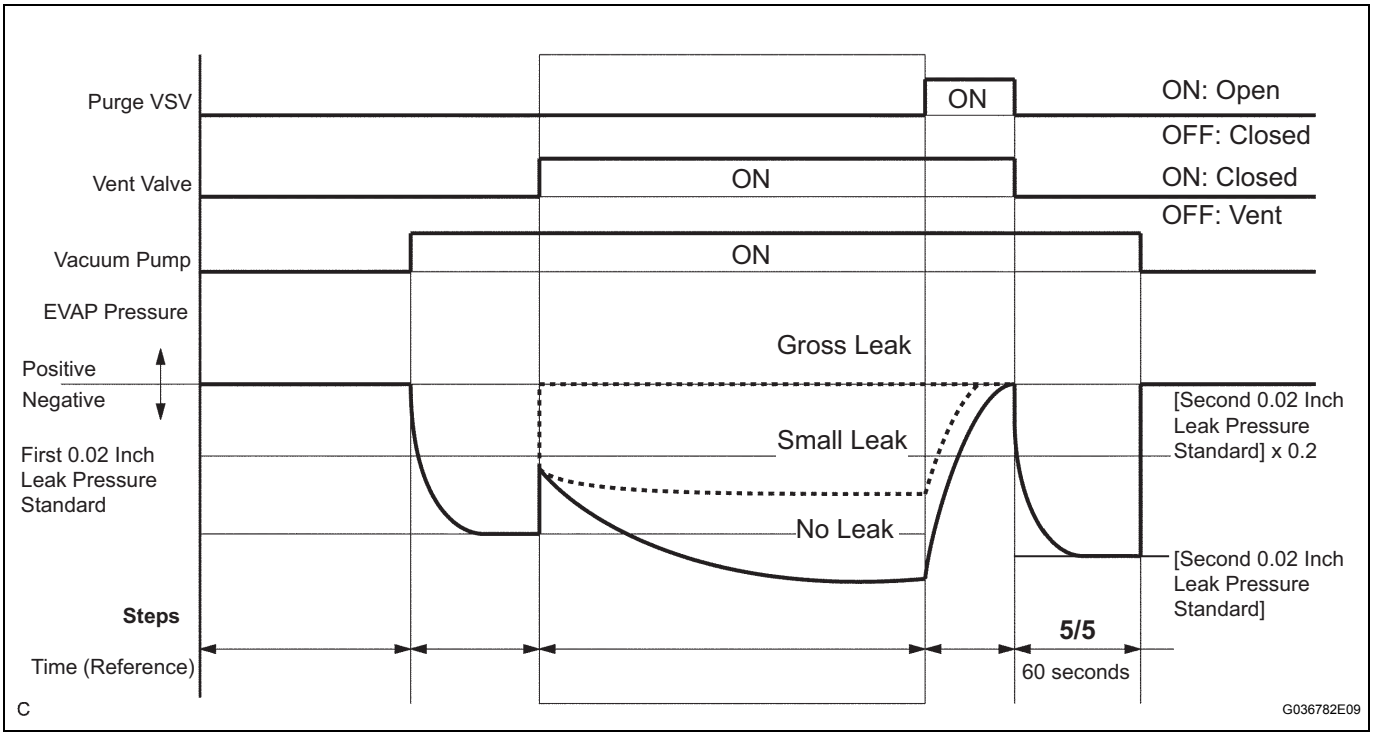

(a) Check the EVAP pressure in step 5/5.
(b) Compare the EVAP pressure in step 3/5 and the second 0.02 inch leak pressure standard (step 5/5).

Result

DTCs*	Test Results	Suspected Trouble Areas	Proceed to
-	EVAP pressure (step 3/5) lower than second 0.02 inch leak pressure standard (step 5/5)	Not yet determined (no leafage from EVAP system)	A
P0441 and P0455	EVAP pressure (step 3/5) higher than [second 0.02 inch leak pressure standard (step 5/5) x 0.2]	• Purge VSV stuck open • EVAP gross leak	B
P0456	EVAP pressure (step 3/5) higher than second 0.02 inch leak pressure standard (step 5/5)	EVAP small leak	C

*: The DTCs related to the EVAP system are displayed on the intelligent tester when checking.

A	Go to step 36
B	Go to step 12

11	PERFORM EVAP SYSTEM CHECK (STEP 3/5)

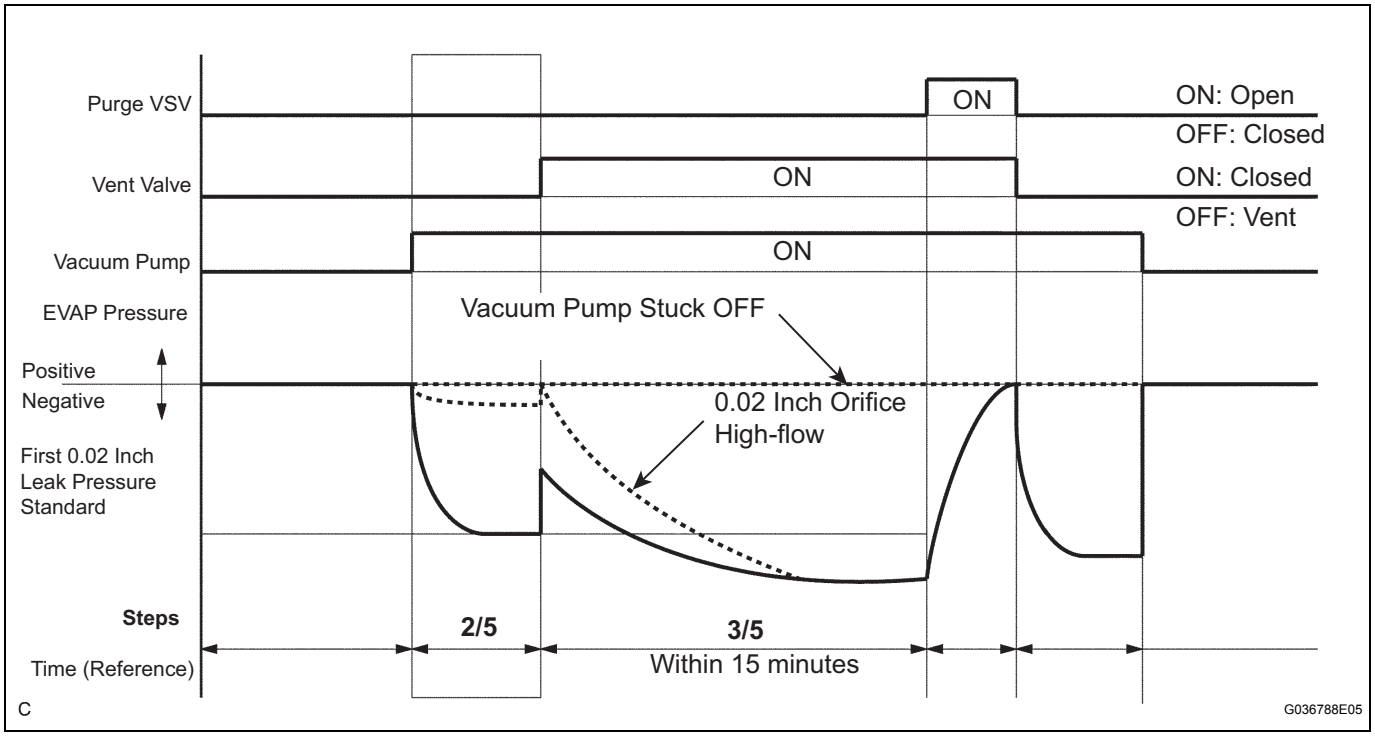

(a) Check the EVAP pressure in step 3/5.

Result

DTCs*	Test Results	Suspected Trouble Areas	Proceed to
P043F	EVAP pressure is less than [0.02 inch leak pressure standard] measured in step 2/5	0.02 inch orifice high-flow	A
P2401	EVAP pressure is almost the same as [0.02 inch leak pressure standard] measure in step 2/5	Vacuum pump stuck OFF	B

*: The DTCs related to the EVAP system are displayed on the intelligent tester when checking.
HINT:
The first 0.02 inch leak pressure standard is the value determined in step 2/5.

A	Go to step 30
B	Go to step 23

12	PERFORM ACTIVE TEST BY INTELLIGENT TESTER (PURGE VSV)

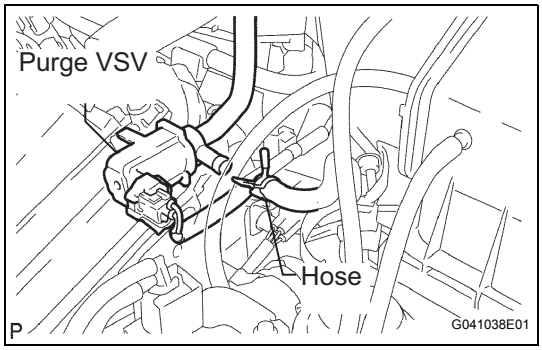

(a) Select the following menu items on the tester: DIAGNOSIS / ENHANCED OBD II / ACTIVE TEST / EVAP VSV (ALONE).
(b) Disconnect the hose (connected to the canister) from the purge VSV.
(c) Start the engine.
(d) Using the tester, turn off the purge VSV (EVAP VSV: OFF).
(e) Confirm that the purge VSV has no suction with your fingers.
(f) Using the tester, turn on the purge VSV (EVAP VSV: ON).
(g) Confirm that the purge VSV has suction with your fingers.

Result

Test Results	Suspected Trouble Areas	Proceed to
No suction when purge VSV turned OFF, and suction applied when turned ON	-	A
Suction applied when purge VSV turned OFF	Purge VSV stuck open	B
No suction when purge VSV turned ON	• Purge VSV stuck closed • Problems with EVAP hose between purge VSV and throttle body	C

(h) Reconnect the hose.

B	Go to step 14
C	Go to step 15

A

13	CHECK FUEL TANK CAP ASSEMBLY

(a) Check that the fuel tank cap is correctly installed and confirm the fuel tank cap meets OEM specification.
HINT:
If an EVAP tester is available, check the fuel tank cap using the tester.
(1) Tighten the fuel tank cap
(2) Remove the fuel tank cap and install it onto a fuel tank cap adaptor.
(3) Connect an EVAP tester pump hose to the adaptor, and pressurize the cap to 3.2 to 3.7 kPa (24 to 28 mmHg) using an EVAP tester pump.
(4) Seal the adaptor and wait for 2 minutes.
(5) Check the pressure. If the pressure is 2 kPa (15 mmHg) or more, the fuel tank cap is normal.

Result

Test Results	Suspected Trouble Areas	Proceed to
Fuel tank cap correctly installed	-	A
Fuel tank cap loose	• Fuel tank cap improperly installed • Defective fuel tank cap • Fuel tank cap does not meet OEM specifications	B
No fuel tank cap	-	C

A → Go to step 29

B → Go to step 27

C → Go to step 28

ES

14 INSPECT VACUUM SWITCHING VALVE NO.1

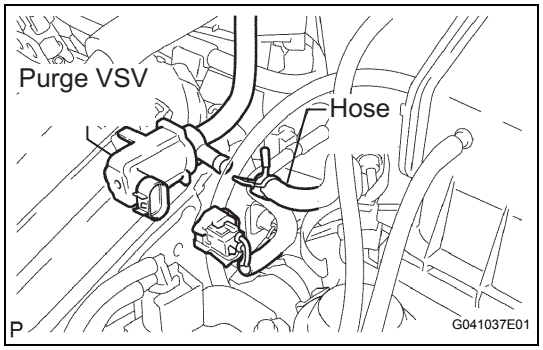

(a) Turn the ignition switch off.
(b) Disconnect the B31 purge VSV connector.
(c) Disconnect the hose (connected to the canister) from the purge VSV.
(d) Start the engine.
(e) Confirm that the purge VSV has no suction with your fingers.

Result

Test Results	Suspected Trouble Areas	Proceed to
No suction	ECM	A
Suction applied	Purge VSV	B

(f) Reconnect the purge VSV connector.
(g) Reconnect the hose.

A → Go to step 35

B → Go to step 31

15 CHECK EVAP HOSE (PURGE VSV - THROTTLE BODY)

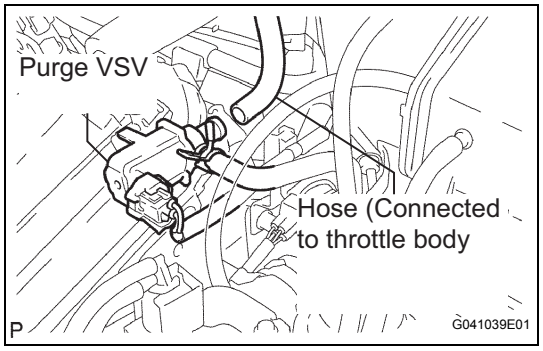

(a) Disconnect the hose (connected to the throttle body) from the purge VSV.
(b) Start the engine.
(c) Confirm that the hose has suction with your fingers.

Result

Test Results	Suspected Trouble Areas	Proceed to
Suction applied	-	A
No suction	• Throttle body • EVAP hose between purge VSV and throttle body	B

(d) Reconnect the hose.

B → Go to step 26

A

16	INSPECT VACUUM SWITCHING VALVE NO.1 (PURGE VSV)

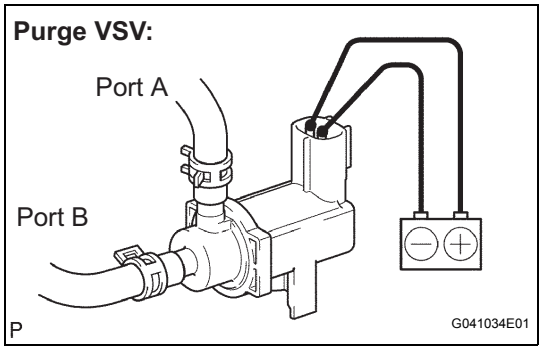

(a) Remove the purge VSV.
(b) Apply battery voltage to the terminals of the purge VSV.
(c) Using compressed air, confirm that air flows from port A to port B.

Result

Test Results	Suspected Trouble Area	Proceed to
Air flowed	-	A
No air flow	Purge VSV	B

(d) Install the purge VSV.

B → **Go to step 31**

A

17	CHECK HARNESS AND CONNECTOR (POWER SOURCE OF PURGE VSV)

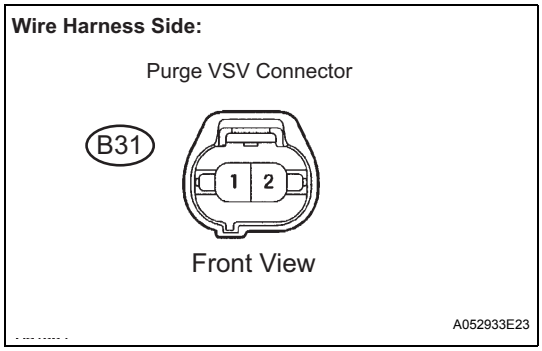

(a) Disconnect the B31 purge VSV connector.
(b) Turn the ignition switch on (IG).
(c) Measure the voltage between terminal 1 of the purge VSV connector and the body ground.

Result

Test Results	Suspected Trouble Areas	Proceed to
Between 11 V and 14 V	-	A
Other than result above	Wire harness or connectors between purge VSV and ECM	B

(d) Reconnect the purge VSV connector.

B → **Go to step 32**

A

18 CHECK HARNESS AND CONNECTOR (PURGE VSV - ECM)

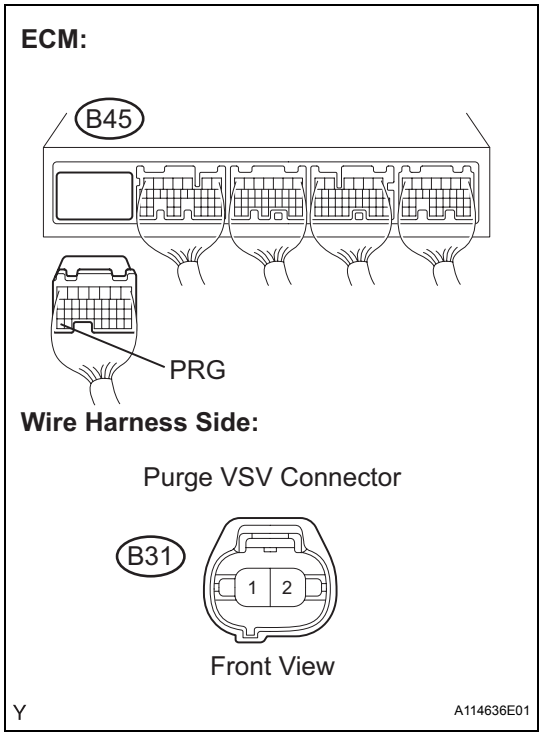

(a) Disconnect the B45 ECM connector and the B31 purge VSV connector.
(b) Measure the resistance between the terminals of the purge VSV connector and ECM connector.
Standard resistance

Tester Connections	Specified Conditions
B45-34 (PRG) - B31-1	Below 1 Ω
B45-34 (PRG) - Body ground	10 kΩ or higher
B31-1 - Body ground	10 kΩ or higher

(c) Reconnect the purge VSV connector.
(d) Reconnect the ECM connector.

OK	Go to step 35
NG	Go to step 32

ES

19 PERFORM ACTIVE TEST BY INTELLIGENT TESTER (FOR VENT VALVE)

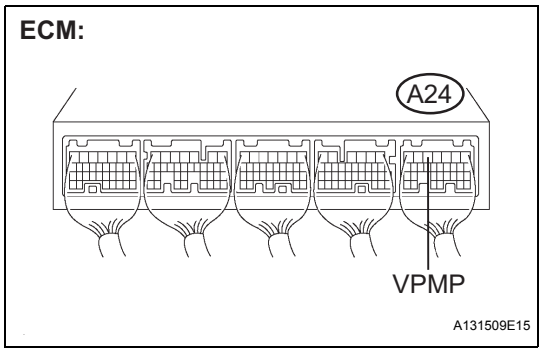

(a) Turn the ignition switch on (IG).
(b) Select the following menu items on the tester: DIAGNOSIS / ENHANCED OBD II / ACTIVE TEST / VENT VALVE.
(c) Measure the voltage between terminal VPMP of the ECM connector and the body ground when the vent valve is turned ON (close) and OFF (vent) using the tester.
Result

Test Results	Suspected Trouble Areas	Proceed to
Between 9 V and 14 V when OFF Below 3 V when ON	Vent valve	A
Below 3 V when OFF and ON	ECM	B

A	Go to step 22
B	Go to step 35

20	PERFORM ACTIVE TEST BY INTELLIGENT TESTER (FOR VENT VALVE)

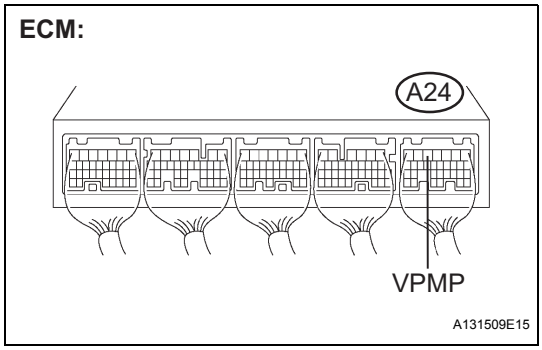

(a) Turn the ignition switch on (IG).
(b) Select the following menu items on the tester: DIAGNOSIS / ENHANCED OBD II / ACTIVE TEST / VENT VALVE (ALONE).
(c) Measure the voltage between terminal VPMP of the ECM connector and the body ground when the vent valve is turned ON (close) and OFF (vent) using the tester.

Result

Test Results	Suspected Trouble Areas	Proceed to
Between 3 V when OFF and ON	Power source of vent valve	A
Between 9 V and 14 V when OFF Below 3 V when ON	Vent valve	B
Between 9 V and 14 V when OFF and ON	ECM	C

B → Go to step 22

C → Go to step 35

A

21	INSPECT PUMP MODULE (POWER SOURCE FOR VENT VALVE)

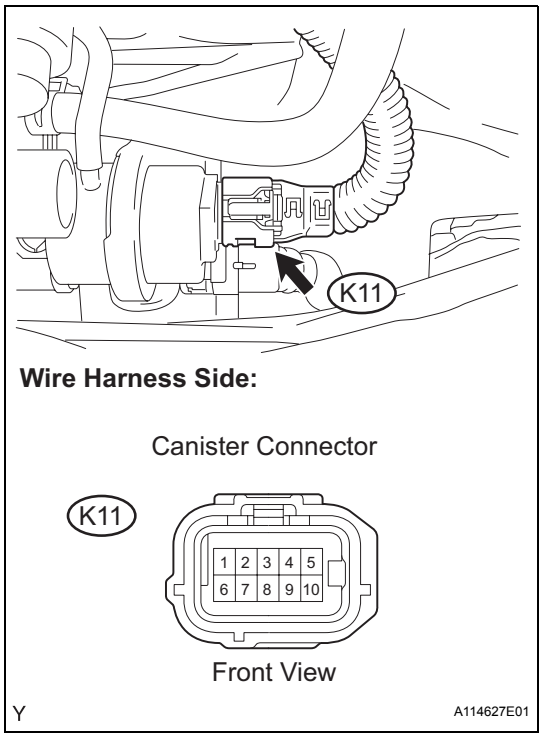

(a) Turn the ignition switch off.
(b) Disconnect the K11 canister connector.
(c) Turn the ignition switch on (IG).
(d) Measure the voltage between terminal 9 of the canister connector and the body ground.

Result

Test Results	Suspected Trouble Areas	Proceed to
Between 9 V and 14 V	-	A
Between 0 V and 3 V	Power source wire harness of vent valve	B

(e) Reconnect the canister connector.

B → Go to step 32

A

22 INSPECT PUMP MODULE (VENT VALVE OPERATION)

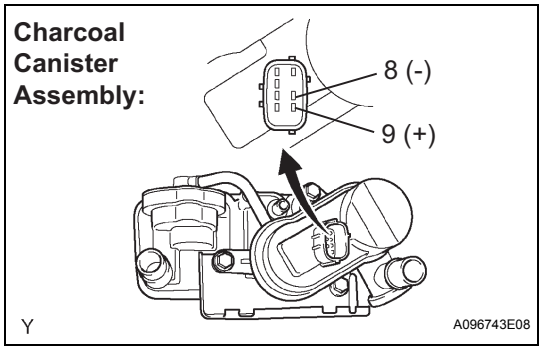

(a) Turn the ignition switch to off.
(b) Disconnect the K11 canister connector.
(c) Apply the battery voltage to terminals 9 and 8 of the pump module.
(d) Touch the pump module to confirm the vent valve operation.

Result

Test Results	Suspected Trouble Areas	Proceed to
Operating	Wire harness between vent valve and ECM	A
Not operating	Vent valve	B

(e) Reconnect the canister connector.

A → **Go to step 32**

B → **Go to step 30**

23 PERFORM ACTIVE TEST BY INTELLIGENT TESTER (FOR PUMP MODULE (VACUUM PUMP))

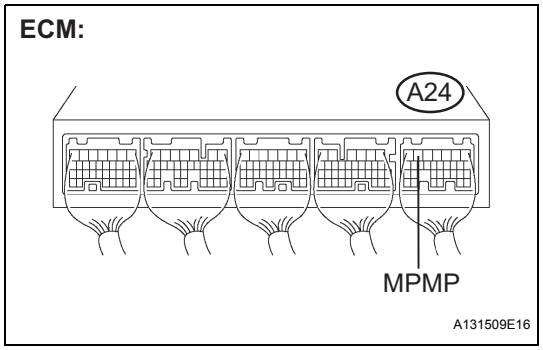

(a) Select the following menu items on the tester: DIAGNOSIS / ENHANCED OBD II / ACTIVE TEST / VACUUM PUMP.
(b) Measure the voltage between terminal MPMP of the ECM connector and the body ground when the vacuum pump is turned ON and OFF using the tester.

Result

Test Results	Suspected Trouble Areas	Proceed to
Between 0 V and 3 V when OFF Between 9 V and 14 V when ON	-	A
Between 9 V and 14 V when OFF Between 0 V and 3 V when ON	ECM	B

B → **Go to step 35**

A

24 CHECK HARNESS AND CONNECTOR (PUMP MODULE - ECM)

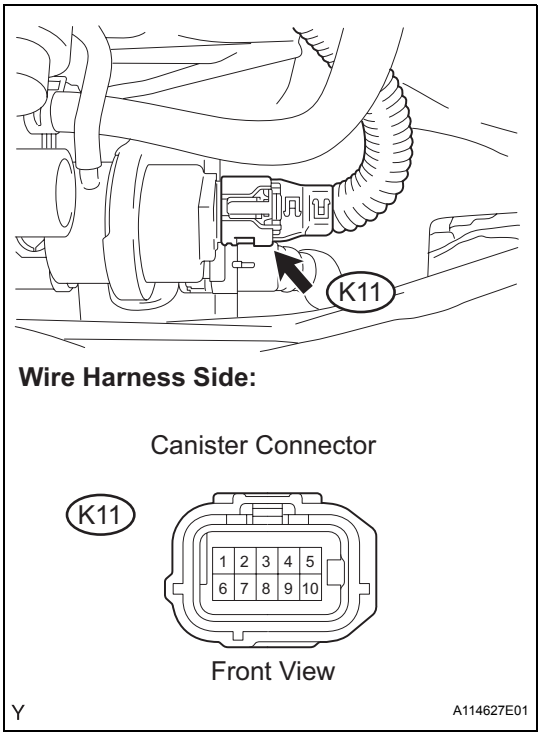

(a) Turn the ignition switch off.
(b) Disconnect the K11 canister connector.
(c) Turn the ignition switch on (IG).
(d) Select the following menu items on the tester: DIAGNOSIS / ENHANCED OBD II / ACTIVE TEST / VACUUM PUMP.
(e) Turn the vacuum pump ON.
(f) Measure the voltage between terminal 1 of the canister connector and the body ground.

Result

Test Results	Suspected Trouble Areas	Proceed to
Between 9 V and 14 V	-	A
Between 0 V and 3 V	Wire harness between ECM and vacuum pump	B

(g) Reconnect the canister connector.

B → **Go to step 32**

A

25 CHECK HARNESS AND CONNECTOR (PUMP MODULE - GROUND)

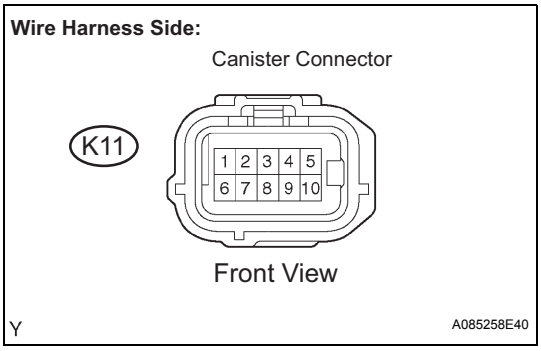

(a) Disconnect the K11 canister connector.
(b) Turn the ignition switch to off.
(c) Check the resistance between terminal 6 of the canister connector and the body ground.

Result

Test Results	Suspected Trouble Areas	Proceed to
Below 1 Ω	Vacuum Pump	A
10 kΩ or higher	Wire harness between vacuum pump and body ground	B

(d) Reconnect the canister connector.

A → **Go to step 30**

B → **Go to step 32**

26 INSPECT THROTTLE WITH MOTOR BODY ASSEMBLY

(a) Stop the engine.
(b) Disconnect the EVAP hose from the throttle body.
(c) Start the engine.
(d) Confirm that the port of the throttle body has suction with your fingers.

Result

Test Results	Suspected Trouble Areas	Proceed to
Suction applied	EVAP hose between throttle body and purge VSV	A
No suction	Throttle body	B

(e) Reconnect the EVAP hose.

A	Go to step 33
B	Go to step 34

27 CORRECTLY REINSTALL OR REPLACE FUEL TANK CAP

HINT:
- When reinstalling the fuel tank cap, tighten it until a few click sounds are heard.
- When replacing the fuel tank cap, use a fuel tank cap that meets OEM specifications, and tighten it until a few click sounds are heard.

NEXT	Go to step 37

28 REPLACE FUEL TANK CAP ASSEMBLY

HINT:
When installing the fuel tank cap, tighten it until a few click sounds are heard.

NEXT	Go to step 37

29 LOCATE EVAP LEAK

(a) Disconnect the vent hose.

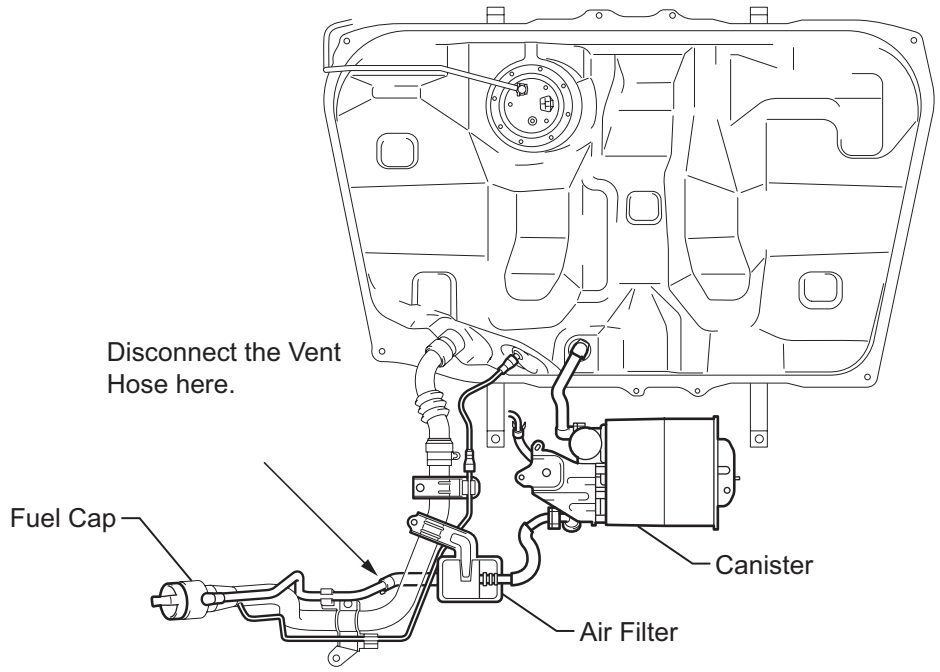

P A126276E01

(b) Connect the EVAP pressure tester tool to the canister with the adapter.

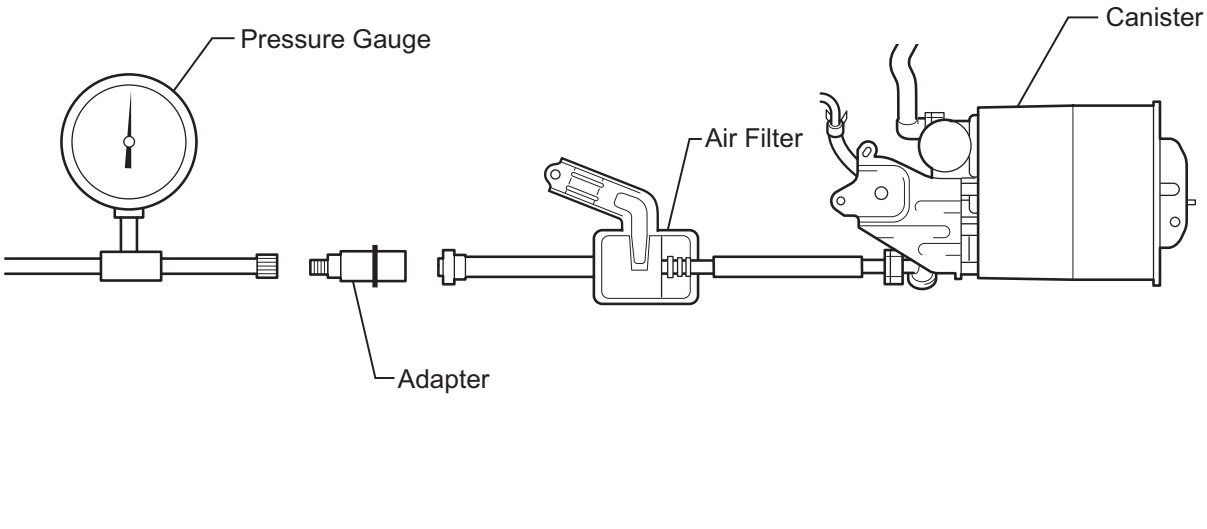

P A126275E01

(c) Pressurize the EVAP system by 3.2 to 3.7 kPa (24 to 28 mmHg).

(d) Apply soapy water to the piping and the connecting parts of the EVAP system.
(e) Look for areas where bubbles appear. This indicates leak point.
(f) Repair or replace the leak point.

NEXT → Go to step 37

30	REPLACE CHARCOAL CANISTER ASSEMBLY

NEXT → Go to step 37

31	REPLACE VACUUM SWITCHING VALVE NO.1 (PURGE VSV)

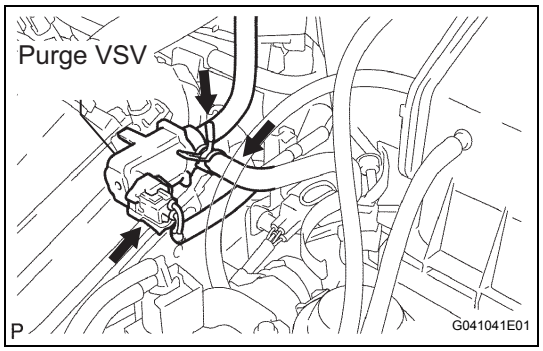

(a) Disconnect the connector and 2 hoses from the purge VSV.
(b) Remove the purge VSV.
(c) Install a new purge VSV.
(d) Reconnect the connector and 2 hoses.

NEXT → Go to step 37

32	REPAIR OR REPLACE HARNESS OR CONNECTOR

NEXT → Go to step 37

33	REPLACE EVAP HOSE (THROTTLE BODY - PURGE VSV)

NEXT → Go to step 37

34	INSPECT THROTTLE WITH MOTOR BODY ASSEMBLY

(a) Remove the throttle body (See page ES-434).
(b) Check that the EVAP purge port of the throttle body is not clogged. If necessary, replace the throttle body.

NEXT → Go to step 37

35	REPLACE ECM

(a) Replace the ECM (See page ES-446).

NEXT → Go to step 37

36	REPAIR OR REPLACE PARTS AND COMPONENTS INDICATED BY OUTPUT DTCS

(a) Repair the malfunctioning areas indicated by the DTCs that had been confirmed when the vehicle was brought in.

NEXT

37	PERFORM EVAP SYSTEM CHECK (AUTO OPERATION)

ES

NOTICE:

- **In the EVAP SYSTEM CHECK (AUTO OPERATION), the series of 5 EVAP SYSTEM CHECK steps are performed automatically. It takes a maximum of approximately 18 minutes.**
- **Do not perform the EVAP SYSTEM CHECK when the fuel tank is more than 90% full because the cut-off valve may be closed, making the leak check of the fuel tank unavailable.**
- **Do not run the engine in this step.**
- **When the temperature of the fuel is 35°C (95°F) or more, a large amount of vapor forms and any check results become inaccurate. When performing an EVAP SYSTEM CHECK, keep the temperature below 35°C (95°F).**

(a) Clear the DTCs (See page ES-44).

(b) On the intelligent tester, select the following menu items: DIAGNOSIS / ENHANCED OBD II / SYSTEM CHECK / EVAP SYS CHECK / AUTO OPERATION.

(c) After the SYSTEM CHECK is completed, check for pending DTCs by selecting the following menu items: DIAGNOSIS / ENHANCED OBD II / DTC INFO / PENDING CODES.
HINT:
If no pending DTC is found, the repair has been successfully completed.

NEXT

COMPLETED

ECM Power Source Circuit

DESCRIPTION

When the ignition switch is turned on (IG), the battery voltage is applied to terminal IGSW of the ECM. The ECM MREL output signal causes a current to flow to the coil, closing the contacts of the EFI relay and supplying power to terminal +B of the ECM.
If the ignition switch is turned off, the ECM holds the EFI relay ON for a maximum of 2 seconds to allow for the initial setting of the throttle valve.

WIRING DIAGRAM

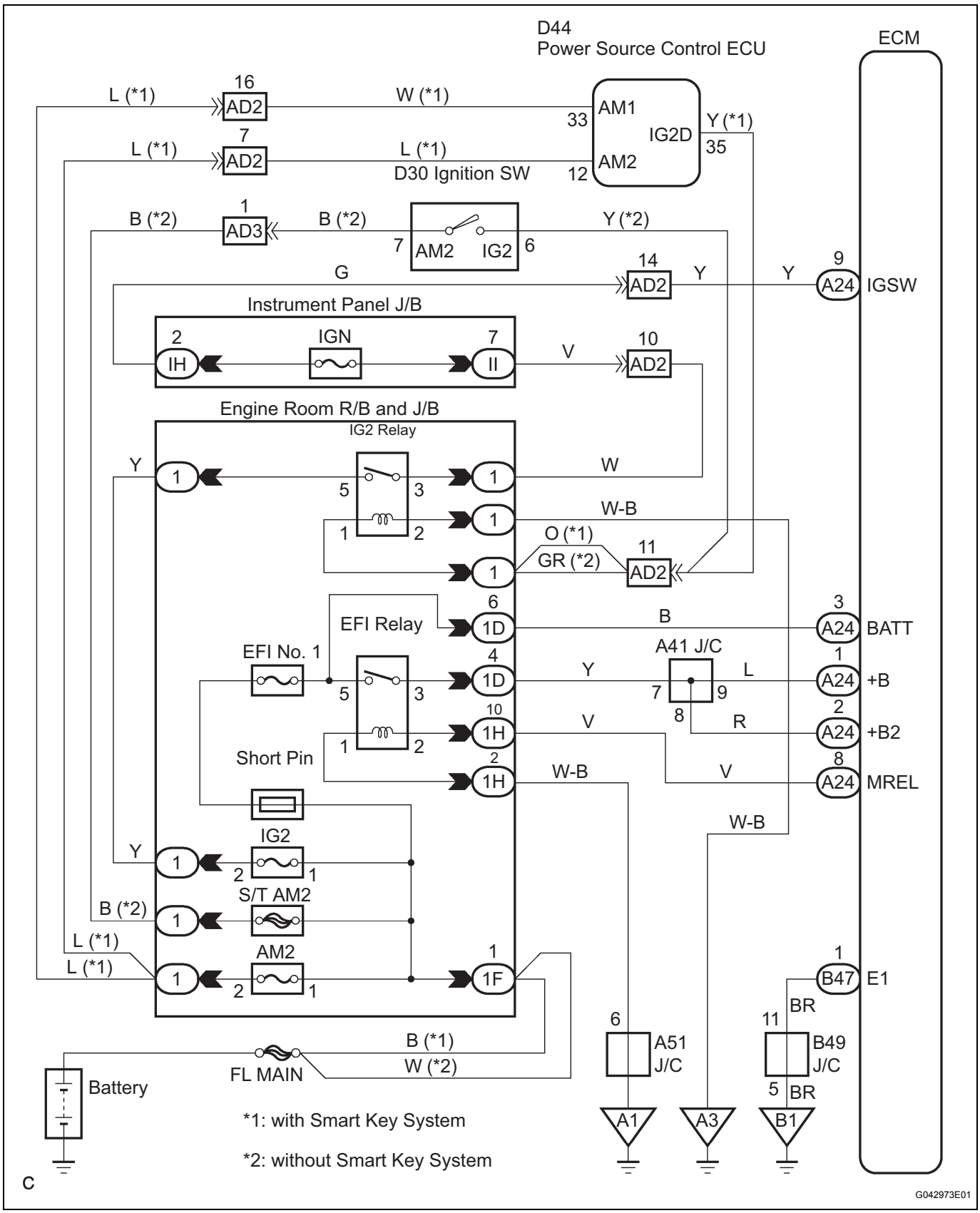

INSPECTION PROCEDURE

1 INSPECT ECM (+B VOLTAGE)

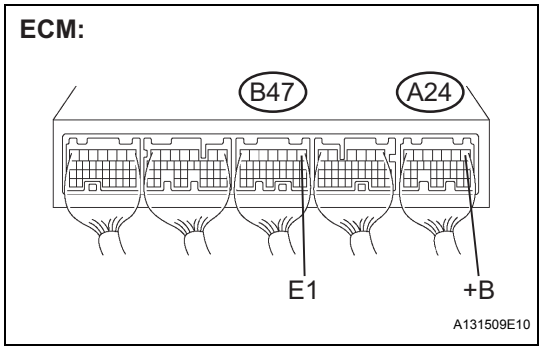

(a) Turn the ignition switch on (IG).
(b) Measure the voltage between the terminals of the A24 and B47 ECM connectors.
Standard voltage

Tester Connections	Specified Conditions
+B (A24-1) - E1 (B47-1)	9 to 14 V

OK → **PROCEED TO NEXT CIRCUIT INSPECTION SHOWN IN PROBLEM SYMPTOMS TABLE**

NG

2 CHECK HARNESS AND CONNECTOR (ECM - BODY GROUND)

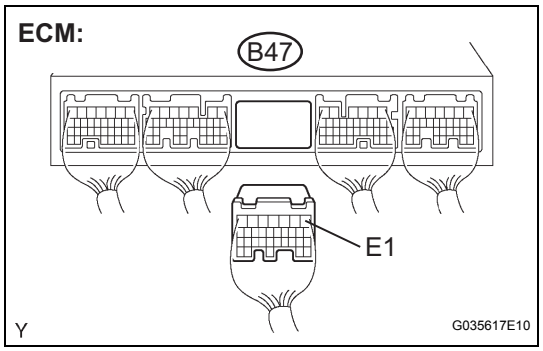

(a) Disconnect the B47 ECM connector.
(b) Measure the resistance between the terminal of the ECM connector and body ground.
Standard resistance (Check for open)

Tester Connections	Specified Conditions
E1 (B47-1) - Body ground	Below 1 Ω

(c) Reconnect the ECM connector.

NG → **REPAIR OR REPLACE HARNESS OR CONNECTOR**

OK

3 INSPECT ECM (IGSW VOLTAGE)

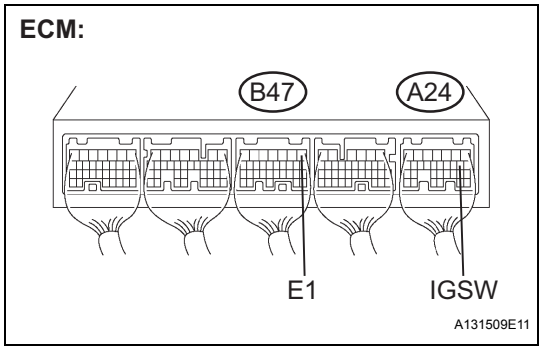

(a) Turn the ignition switch on (IG).
(b) Measure the voltage between the terminals of the A24 and B47 ECM connectors.
Standard voltage

Tester Connections	Specified Conditions
IGSW (A24-9) - E1 (B47-1)	9 to 14 V

OK → **Go to step 6**

NG

ES

4	CHECK FUSE (IGN FUSE)

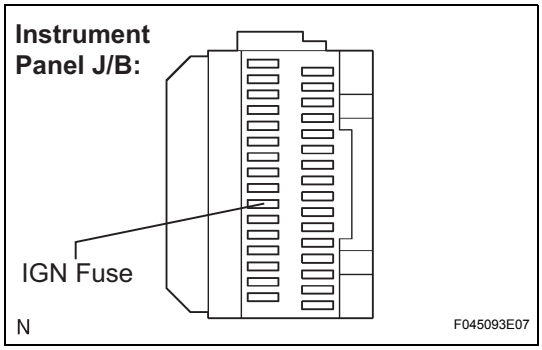

(a) Remove the IGN fuse from the instrument panel J/B.
(b) Measure the IGN fuse resistance.
Standard resistance:
Below 1 Ω
(c) Reinstall the IGN fuse.

NG → **CHECK FOR SHORTS IN ALL HARNESSES AND CONNECTORS CONNECTED TO FUSE AND REPLACE FUSE**

OK

5	INSPECT IGNITION OR STARTER SWITCH ASSEMBLY

(a) Inspect the ignition or starter switch assembly (See page ST-85).

NG → **REPLACE IGNITION OR STARTER SWITCH ASSEMBLY**

OK

6	INSPECT ECM (MREL VOLTAGE)

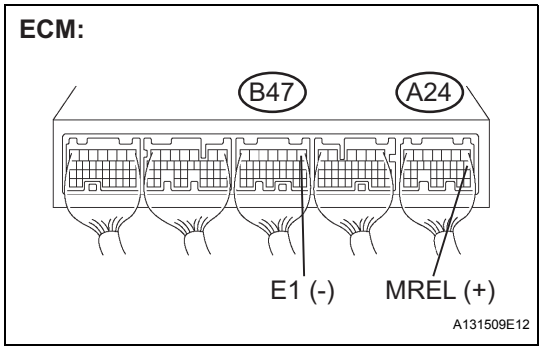

(a) Turn the ignition switch on (IG).
(b) Measure the voltage between the terminals of the A24 and B47 ECM connectors.
Standard voltage

Tester Connections	Specified Conditions
MREL (A24-8) - E1 (B47-1)	9 to 14 V

NG → **REPLACE ECM**

OK

7 CHECK FUSE (EFI FUSE)

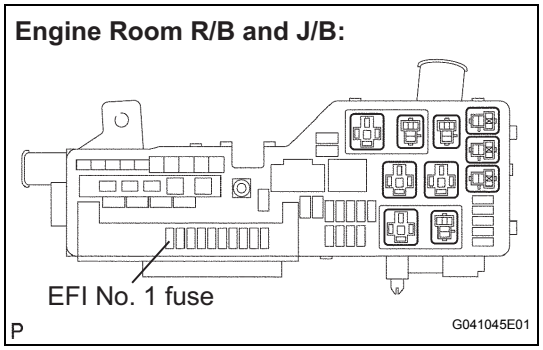

(a) Remove the EFI No. 1 fuse from the engine room R/B and J/B.
(b) Measure the EFI No. 1 fuse resistance.
Standard resistance:
Below 1 Ω
(c) Reinstall the EFI No. 1 fuse.

NG → **CHECK FOR SHORTS IN ALL HARNESSES AND CONNECTORS CONNECTED TO FUSE AND REPLACE FUSE**

OK

8 INSPECT ENGINE ROOM JUNCTION BLOCK ASSEMBLY (EFI RELAY)

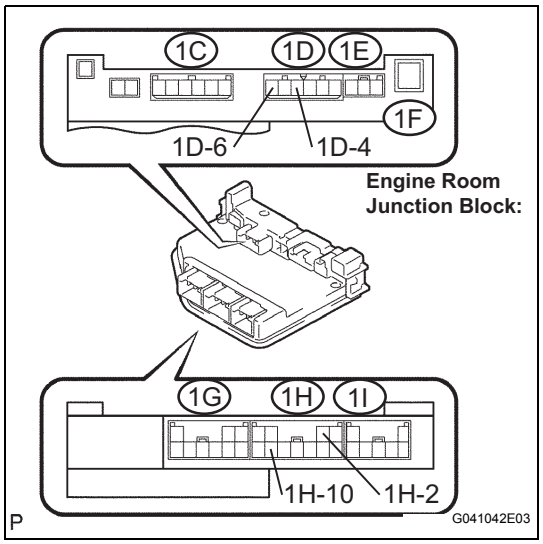

(a) Remove the engine room junction block.
(b) Measure the EFI relay resistance.
Standard resistance

Tester Connections	Specified Conditions
1D-4 - 1D-6	10 kΩ or higher
1D-4 - 1D-6	Below 1 Ω (when battery voltage applied to terminals 1H-10 and 1H-2)

(c) Reinstall the engine room junction block.

NG → **REPLACE ENGINE ROOM JUNCTION BLOCK ASSEMBLY**

OK

ES

9	CHECK HARNESS AND CONNECTOR (EFI RELAY - ECM, EFI RELAY - BODY GROUND)

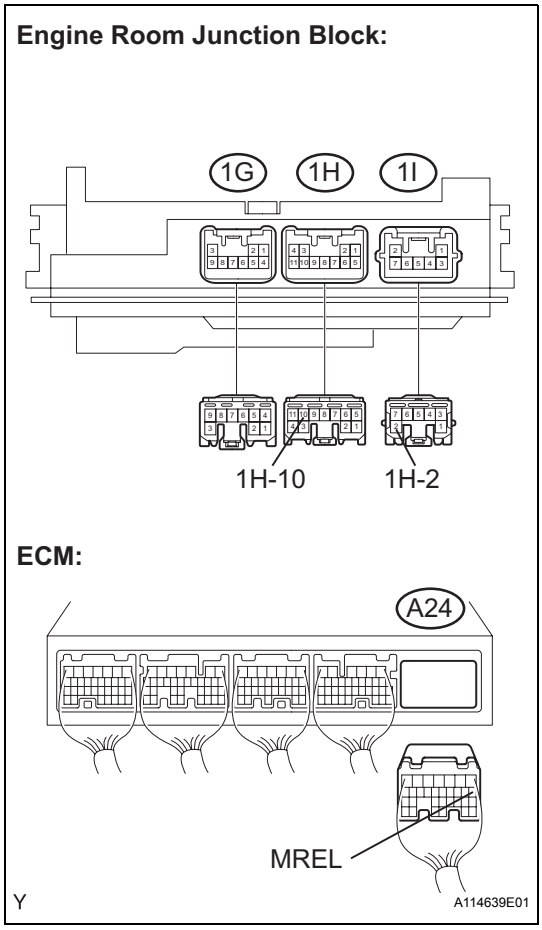

(a) Check the harness and connector between the EFI relay and ECM.
  (1) Remove the engine room junction block.
  (2) Disconnect the A24 ECM connector.
  (3) Measure the resistance between the terminals of the ECM connector and engine room junction block (EFI relay).

Standard resistance (Check for open)

Tester Connections	Specified Conditions
Engine Room Junction Block (EFI relay) (1H-10) - MREL (A24-8)	Below 1 Ω

Standard resistance (Check for short)

Tester Connections	Specified Conditions
Engine Room Junction Block (EFI relay) (1H-10) or MREL (A24-8) - Body ground	10 kΩ or higher

(b) Check the harness and connector between the engine room junction block (EFI relay) and body ground.
  (1) Measure the resistance between the terminal of the engine room junction block (EFI relay) and body ground.

Standard resistance (Check for open)

Tester Connections	Specified Conditions
Engine Room Junction Block (EFI relay) (1H-2) - Body ground	Below 1 Ω

  (2) Reinstall the engine room junction block.
  (3) Reconnect the ECM connector.

OK → **REPAIR OR REPLACE HARNESS OR CONNECTOR**

NG

CHECK AND REPLACE HARNESS AND CONNECTOR (TERMINAL +B OF ECM - BATTERY POSITIVE TERMINAL)

Fuel Pump Control Circuit

DESCRIPTION

In the diagram below, when the engine is cranked, current flows from terminal ST1 (STR1) of the ignition switch (power source control ECU) to the starter relay (Marking: ST) coil and also current flows to terminal STA of ECM (STA signal).
When the STA signal and NE signal are input to the ECM, Tr is turned ON, current flows to coil of the circuit opening relay (Marking: C/OPN), the relay switches on, power is supplied to the fuel pump and the fuel pump operates.
While the NE signal is generated (engine running), the ECM keeps Tr ON (circuit opening relay ON) and the fuel pump also keeps operating.

WIRING DIAGRAM

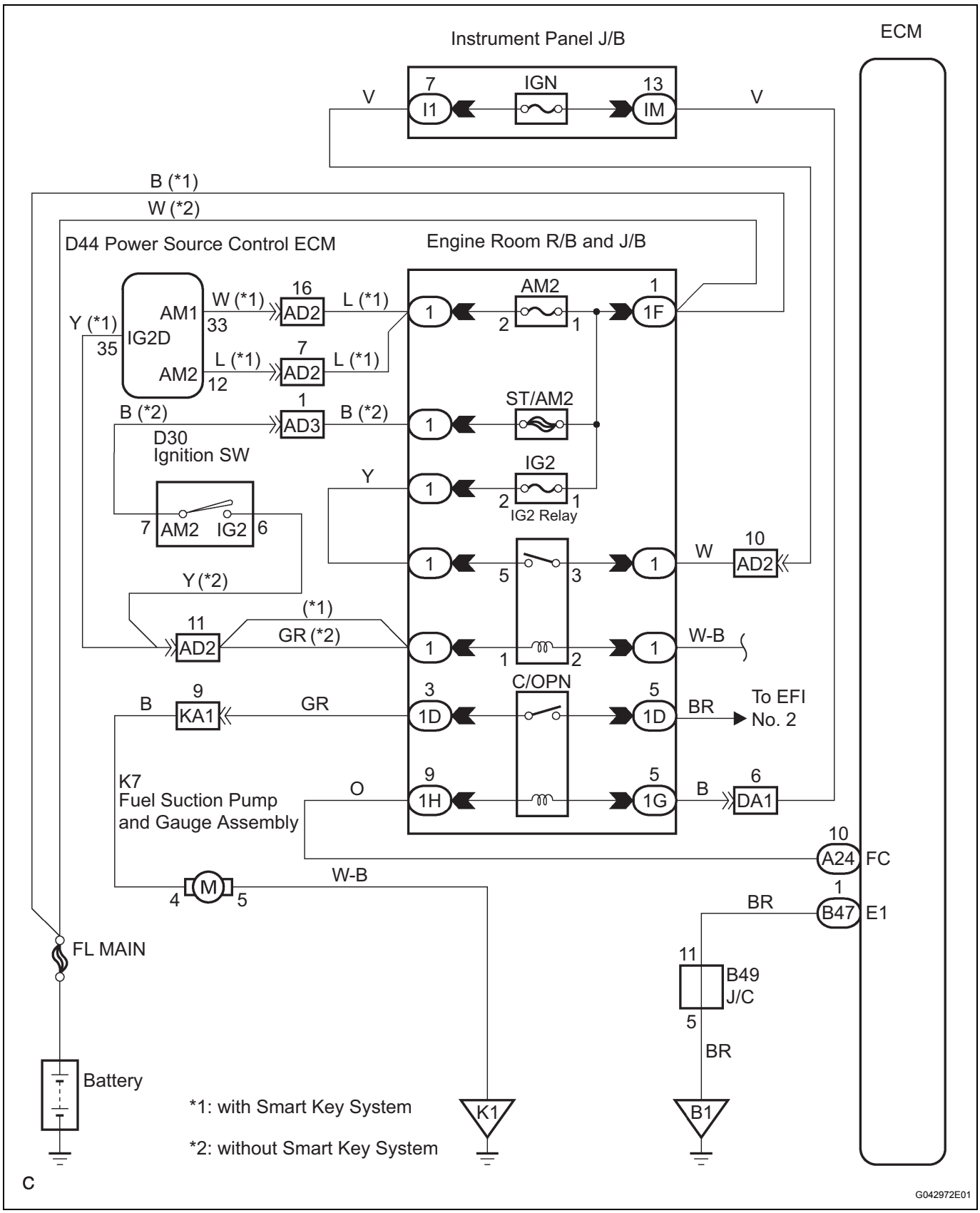

INSPECTION PROCEDURE

1	CHECK FUEL PUMP OPERATION

(a) Check if there is pressure in the fuel inlet hose (See page FU-7).
HINT:
If there is fuel pressure, you will hear the sound of fuel flowing.

OK → **Go to step 5**

NG

2	PERFORM ACTIVE TEST BY INTELLIGENT TESTER (OPERATION OF CIRCUIT OPENING RELAY)

(a) Connect the intelligent tester to the DLC3.
(b) Turn the ignition switch on (IG) and turn the tester on.
(c) Select the following menu items: DIAGNOSIS / ENHANCED OBD II / ACTIVE TEST / FUEL PUMP/ SPD.
(d) Check whether operating sounds can be heard while operating the relay using the tester.
OK:
Operating sounds can be heard from the relay.

OK → **Go to step 5**

NG

3	INSPECT ENGINE ROOM JUNCTION BLOCK ASSEMBLY (CIRCUIT OPENING RELAY)

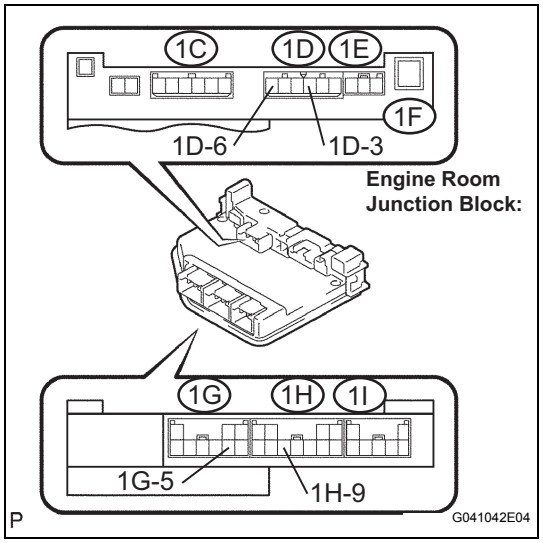

(a) Remove the engine room junction block.
(b) Measure the circuit opening relay resistance.
Standard resistance

Tester Connections	Specified Conditions
1D-5 - 1D-3	10 kΩ or higher
1D-5 - 1D-3	Below 1 Ω (when battery voltage applied to terminals 1G-5 and 1H-9)

(c) Reinstall the engine room junction block.

NG → **REPLACE ENGINE ROOM JUNCTION BLOCK ASSEMBLY**

OK

4	INSPECT ECM (FC VOLTAGE)

ECM:

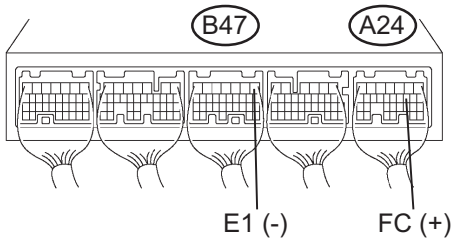

A131509E13

(a) Turn the ignition switch on (IG).
(b) Measure the voltage between the terminals of the A24 and B47 ECM connectors.

Standard voltage

Tester Connections	Specified Conditions
FC (A24-10) - E1 (B47-1)	9 to 14 V

OK → **REPLACE ECM**

NG

CHECK AND REPLACE HARNESS AND CONNECTOR (ENGINE ROOM JUNCTION BLOCK - IGNITION SWITCH)

5	INSPECT ECM POWER SOURCE CIRCUIT

HINT:
Refer to "ECM POWER SOURCE CIRCUIT" (See page ES-395).

NG → **REPAIR OR REPLACE ECM POWER SOURCE CIRCUIT**

OK

6	INSPECT FUEL PUMP ASSEMBLY

Component Side:

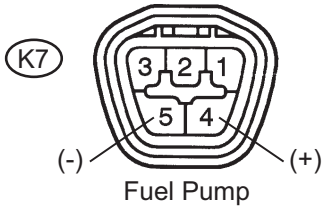

A074356E21

(a) Inspect fuel pump resistance.
  (1) Disconnect the K7 fuel pump connector.
  (2) Measure the resistance between terminals 4 and 5.

  Standard resistance:
  0.2 to 3.0 Ω at 20°C (68°F)

(b) Inspect fuel pump operation.
  (1) Apply battery voltage to both terminals. Check that the fuel pump operates.

  NOTICE:
  - **These tests must be done quickly (within 10 seconds) to prevent the coil from burning out.**
  - **Keep the fuel pump as far away from the battery as possible.**
  - **Always switch at the battery side.**

NG → **REPLACE FUEL PUMP ASSEMBLY**

OK

7	CHECK HARNESS AND CONNECTOR (FUEL PUMP - CIRCUIT OPENING RELAY, FUEL PUMP - BODY GROUND)

Wire Harness Side:

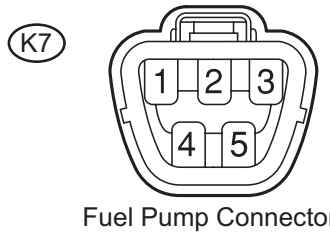

Fuel Pump Connector

Engine Room Junction Block:

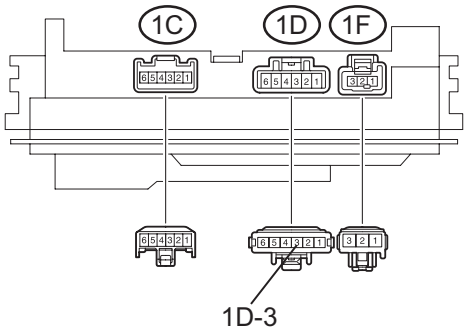

P A118974E01

(a) Check the harness and connector between the fuel pump and circuit opening relay.
  (1) Disconnect the K7 fuel pump connector.
  (2) Remove the engine room junction block.
  (3) Measure the resistance between the terminals of the engine room junction block (circuit opening relay) and fuel pump connector.

Standard resistance (Check for open)

Tester Connections	Specified Conditions
Fuel pump (K7-4) - Engine room junction block (circuit opening relay) (1D-3)	Below 1 Ω

Standard resistance (Check for short)

Tester Connections	Specified Conditions
Fuel pump (K7-4) or Engine room junction block (circuit opening relay) (1D-3) - Body ground	10 kΩ or higher

  (4) Reconnect the fuel pump connector.
  (5) Reinstall the engine room junction block.

(b) Check the harness and connector between the fuel pump and body ground.
  (1) Disconnect the fuel pump connector.
  (2) Measure the resistance between the terminal of the fuel pump connector and body ground.

Standard resistance (Check for open)

Tester Connections	Specified Conditions
Fuel pump (K7-5) - Body ground	Below 1 Ω

  (3) Reconnect the fuel pump connector.

NG → **REPAIR OR REPLACE HARNESS OR CONNECTOR**

OK

PROCEED TO NEXT CIRCUIT INSPECTION SHOWN IN PROBLEM SYMPTOMS TABLE

Cranking Holding Function Circuit

DESCRIPTION

When the ECM detects a start signal from the engine switch, this system monitors the engine rpm and continues to operate the starter until it has determined that the engine has started (engine speed reaches approximately 500 rpm). Furthermore, even if the ECM detects a start signal from the ignition switch, it will not operate the starter if it has determined that the engine has already started.

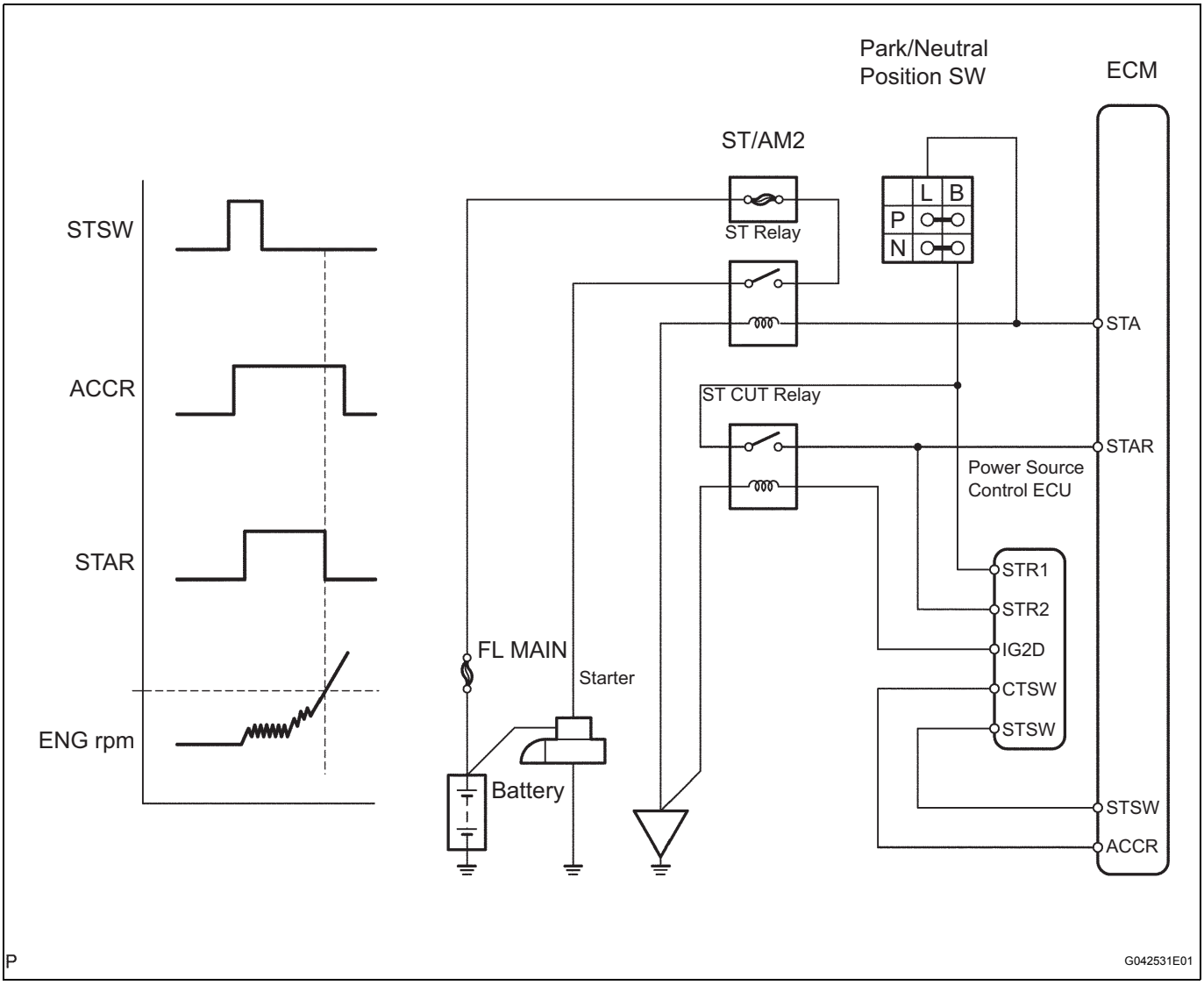

WIRING DIAGRAM

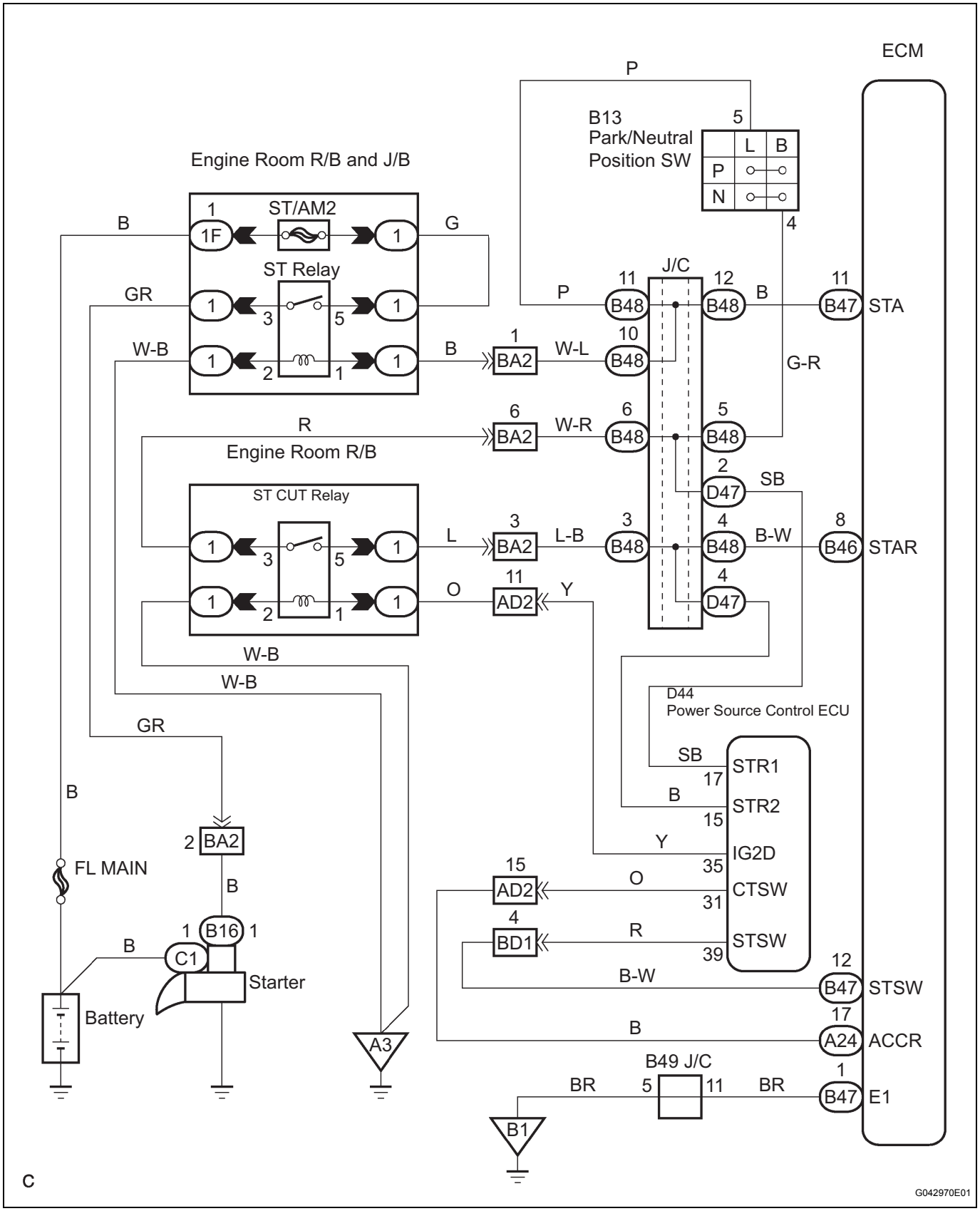

INSPECTION PROCEDURE

1 CHECK OPERATION OF ENGINE CRANKING

(a) When pushing the engine switch to start the engine, check if the starter motor starts.

OK → **PROCEED TO NEXT CIRCUIT INSPECTION SHOWN IN PROBLEM SYMPTOMS TABLE**

NG

2 CHECK DTC FOR PUSH BUTTON START

(a) Check the DTC for push button start (See page ST-22).

A	Normal System Code
B	Malfunction Code

B → **REPLACE PUSH BUTTON START SYSTEM**

A

3 READ VALUE OF INTELLIGENT TESTER (STA SIGNAL)

(a) Connect the intelligent tester to the DLC3.
(b) Select the following menu items: DIAGNOSIS / ENHANCED OBD II / DATA LIST / ALL / STARTER SIG. Read the values.

Standard

STARTER SIG	Ignition Switch Position
OFF	ON
ON	START

OK → **Go to step 6**

NG

4 INSPECT ECM (STAR AND STSW VOLTAGE)

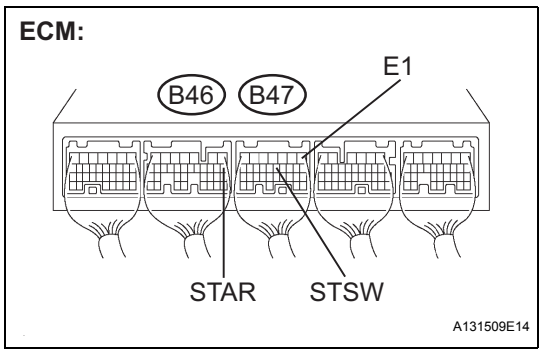

(a) Measure the voltage between the terminals of the B46 and B47 ECM connectors, while cranking the engine.

Standard voltage

Tester Connection	Specified Condition
STAR (B46-8) - E1 (B47-1)	9 to 14 V
STSW (B47-12) - E1 (B47-1)	9 to 14 V

Result

Terminal STAR	Terminal STSW	Proceed to
9 to 14 V	9 to 14 V	A
0 V	9 to 14 V	B
0 V	0 V	C

B → REPLACE ECM

C → Go to step 10

A

5 INSPECT PARK/NEUTRAL POSITION SWITCH ASSEMBLY

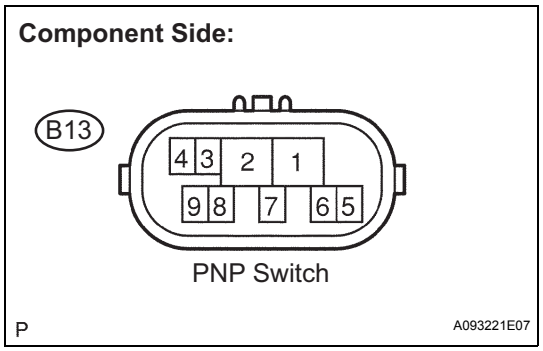

(a) Inspect the Park/Neutral Position (PNP) switch.
(1) Disconnect the B13 PNP switch connector.
(2) Measure the resistance when the transmission gear selector lever is moved to each position.
Standard resistance

Gear Selector Lever Positions	Tester Connections	Specified Conditions
P	2 - 6, 4 - 5	Below 1 Ω
R	1 - 2	Below 1 Ω
N	2 - 9, 4 - 5	Below 1 Ω
D	2 - 7	Below 1 Ω
2	2 - 3	Below 1 Ω
L	2 - 8	Below 1 Ω

(3) Reconnect the PNP switch connector.

NG → REPLACE PARK/NEUTRAL POSITION SWITCH ASSEMBLY

OK

CHECK AND REPLACE HARNESS AND CONNECTOR (PARK/NEUTRAL POSITION SWITCH - ECM)

6 INSPECT STARTER RELAY

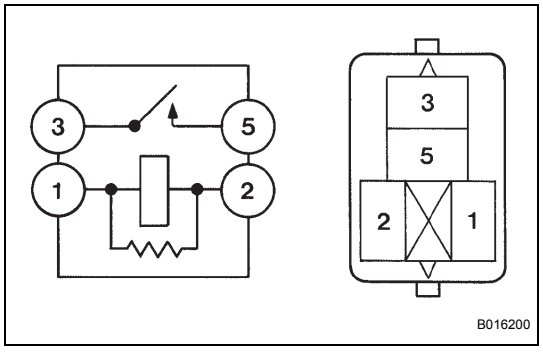

(a) Remove the starter relay and starter cut relay from the engine room R/B and J/B.
(b) Check for continuity in the relays.
Standard

Tester Connections	Specified Conditions
1 - 2	Continuity
3 - 5	No continuity
3 - 5	Continuity (Apply battery voltage to terminals 1 and 2)

(c) Reinstall the starter relay and starter cut relay.

NG → REPLACE STARTER RELAY

OK

7	CHECK HARNESS AND CONNECTOR (PARK/NEUTRAL POSITION SWITCH - STARTER RELAY)

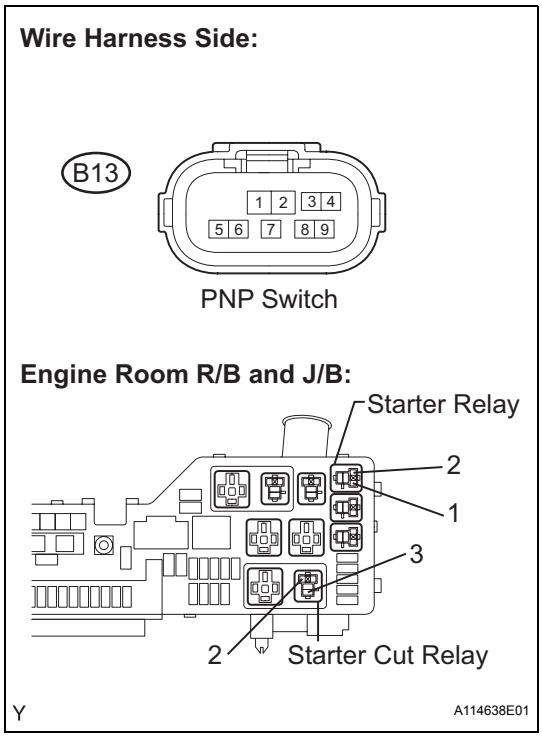

(a) Check the harness and connector between the park/neutral position switch, starter relay and starter cut relay.
  (1) Disconnect the B13 park/neutral position switch connector.
  (2) Remove the starter relay and starter cut relay from the engine room R/B and J/B.
  (3) Check for continuity between the wire harness side connectors.

Standard resistance (Check for open)

Tester Connections	Specified Conditions
Park/neutral position switch (B13-5) - Engine room R/B and J/B (Starter relay terminal 1)	Below 1 Ω
Park/neutral position switch (B13-4) - Engine room R/B and J/B (Starter cut relay terminal 3)	Below 1 Ω

Standard resistance (Check for short)

Tester Connections	Specified Conditions
Park/neutral position switch (B13-5) or Engine room R/B and J/B (Starter relay terminal 1) - Body ground	10 kΩ or higher
Park/neutral position switch (B13-4) or Engine room R/B and J/B (Starter cut relay terminal 3) - Body ground	10 kΩ or higher

  (4) Reconnect the park/neutral position switch connector.

(b) Check the harness and connector between the starter relay, starter cut relay and body ground.
  (1) Check for continuity between each relay and body ground.

Standard resistance (Check for open)

Tester Connections	Specified Conditions
Engine room R/B and J/B (Starter relay terminal 2) - Body ground	Below 1 Ω
Engine room R/B and J/B (Starter cut relay terminal 2) - Body ground	Below 1 Ω

  (2) Reinstall the starter relay and starter cut relay.

NG → **REPAIR OR REPLACE HARNESS OR CONNECTOR**

OK

8	INSPECT ENGINE ROOM RELAY BLOCK (STARTER RELAY VOLTAGE)

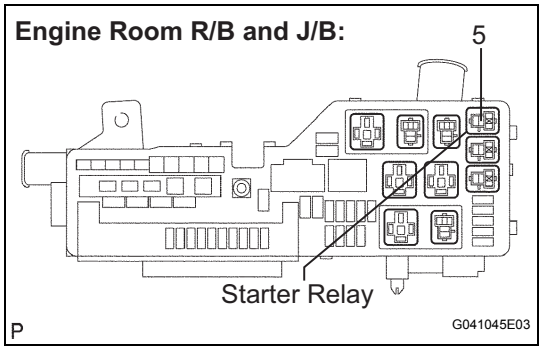

(a) Remove the starter relay from the engine room R/B and J/B.

(b) Measure the voltage between the terminal of the engine room R/B and J/B and body ground.

Standard voltage

Tester Connections	Specified Conditions
Engine room R/B and J/B (Starter relay terminal 5) - Body ground	9 to 14 V

(1) Reinstall the starter relay.

NG → **CHECK AND REPLACE HARNESS AND CONNECTOR (STARTER RELAY - BATTERY)**

OK

9	INSPECT STARTER ASSEMBLY

(a) Inspect the starter assembly (See page ST-74).

NG → **REPAIR OR REPLACE STARTER ASSEMBLY**

OK

CHECK AND REPLACE HARNESS AND CONNECTOR (STARTER RELAY - STARTER, STARTER - BATTERY)

10	CHECK FUSE (ST)

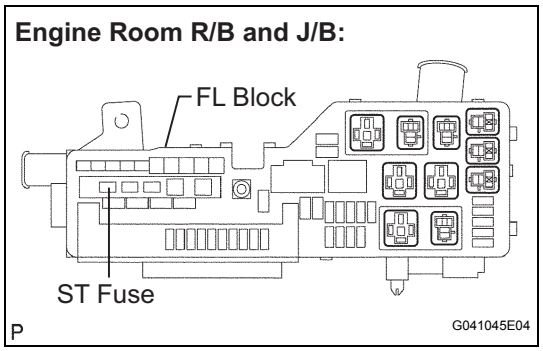

(a) Check for continuity in the ST fuse.

Standard:

Continuity

NG → **CHECK FOR SHORT IN ALL HARNESSES AND CONNECTORS CONNECTED ST FUSE AND REPLACE FL BLOCK**

OK

11	INSPECT PUSH START SWITCH

(a) Inspect the push start switch (See page ST-83).

NG → **REPLACE PUSH START SWITCH**

ES

OK

REPLACE POWER SOURCE CONTROL ECU

ACIS Control Circuit

DESCRIPTION

This circuit opens and closes the Intake Air Control Valve (IACV) in response to changes in the engine load in order to increase the intake efficiency (ACIS: Acoustic Control Induction System).
When the engine speed is between 2,200 and 4,100 rpm and the throttle valve opening angle is 60° or more, the ECM supplies current to the VSV (ON status), to close the IACV. Under other conditions, the VSV is usually OFF and the IACV is open.

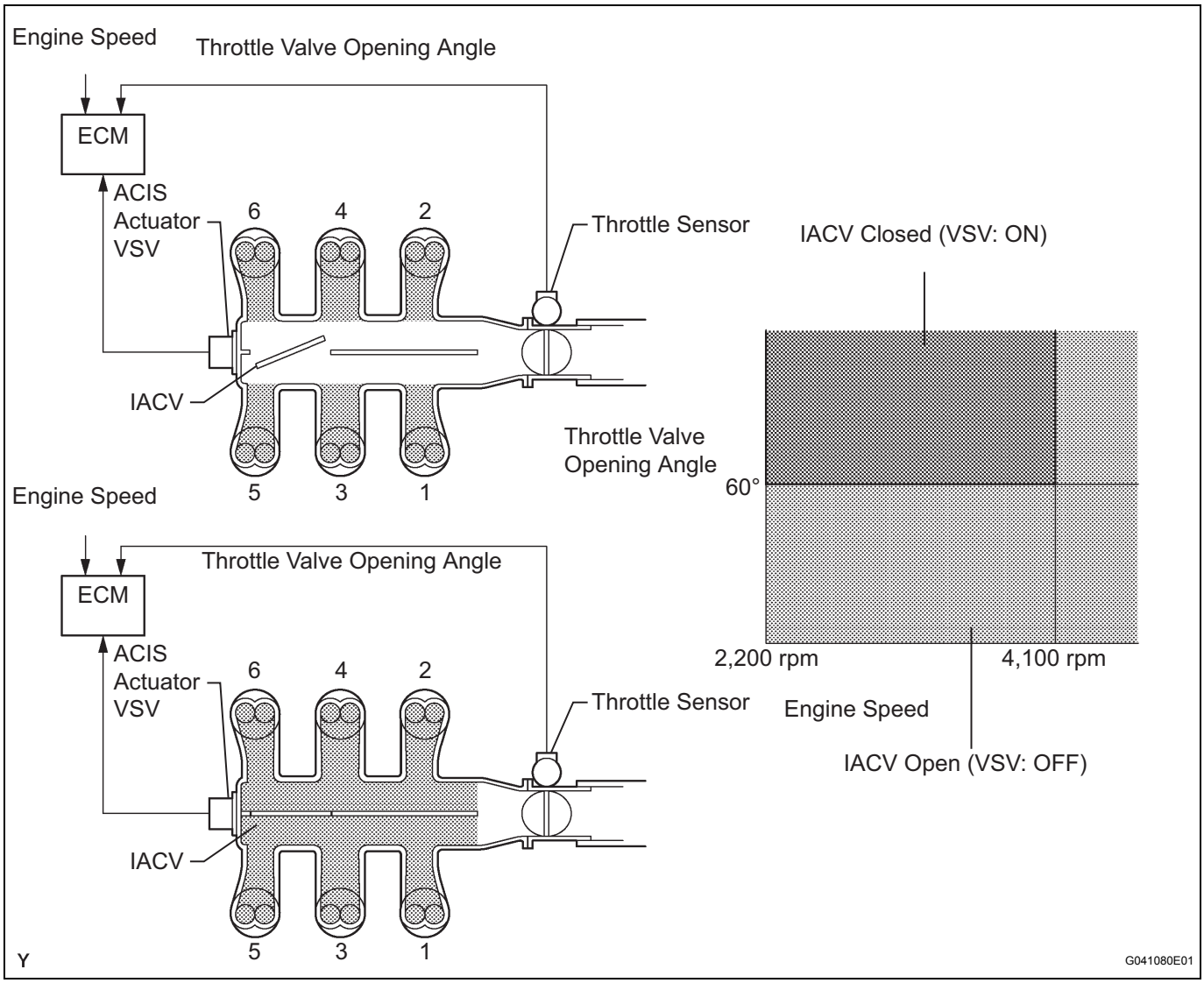

WIRING DIAGRAM

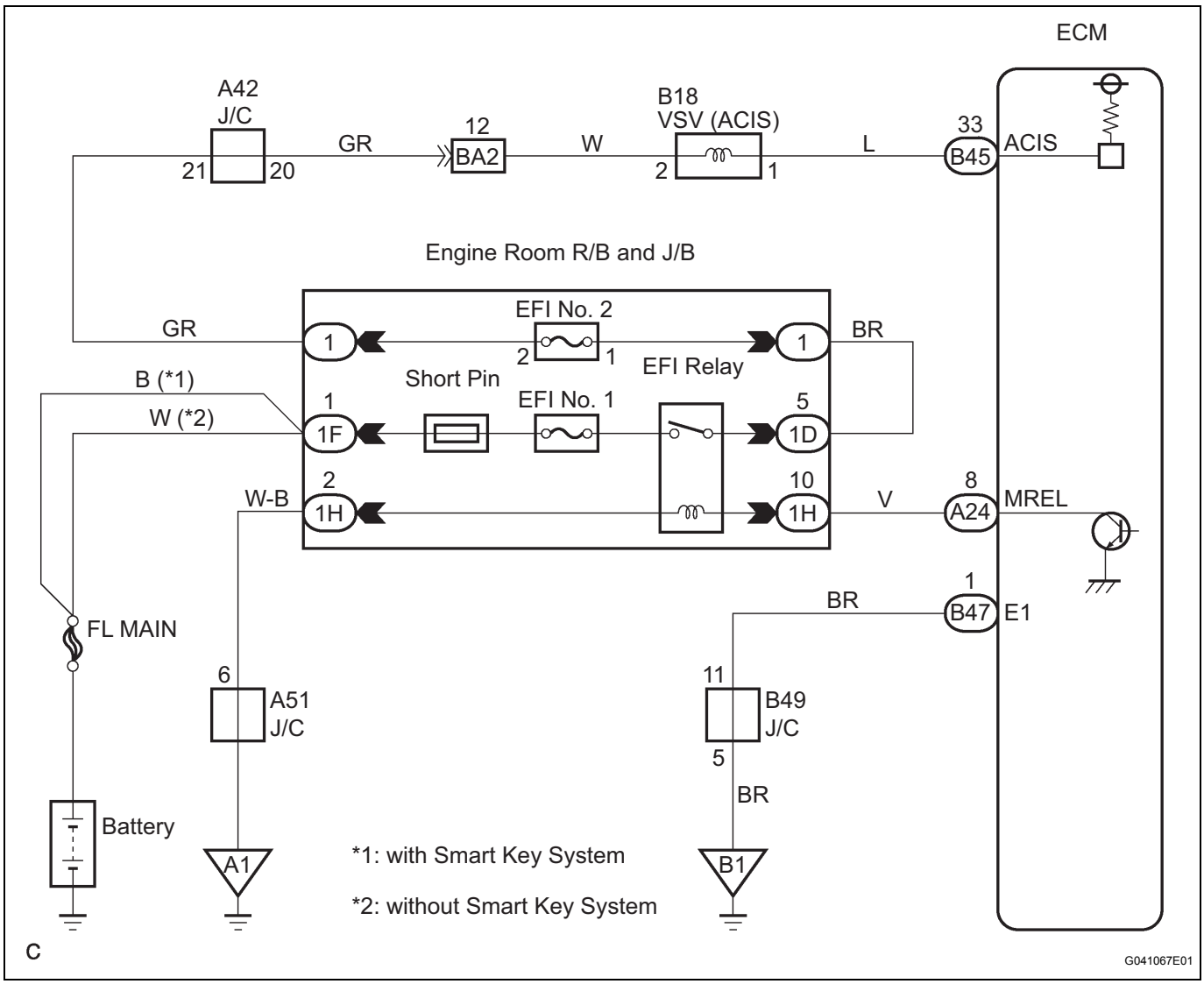

INSPECTION PROCEDURE

1	PERFORM ACTIVE TEST BY INTELLIGENT TESTER (OPERATE VSV FOR ACIS)

(a) Connect the intelligent tester to the DLC3.
(b) Start the engine and turn the intelligent tester on.
(c) Select the following menu items: DIAGNOSIS / ENHANCED OBD II / ACTIVE TEST / INTAKE CTL VSV1. Operate the VSV for AICS.
OK:
Operational noise can be heard.

OK	PROCEED TO NEXT CIRCUIT INSPECTION SHOWN IN PROBLEM SYMPTOMS TABLE

NG

2	CHECK INTAKE AIR CONTROL VALVE (OPERATION)

Component Side:

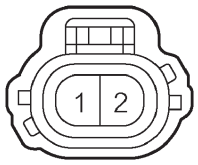

Air Intake Valve Connector

H A095664E01

(a) Disconnect the B18 air intake valve connector.
(b) Apply battery voltage between the terminals of the air intake valve connector.
(c) Check the air intake valve operation.
OK:
Operational noise can be heard.

NG → **REPLACE INTAKE AIR SURGE TANK**

OK

3	CHECK HARNESS AND CONNECTOR (VSV FOR ACIS - ECM, VSV FOR ACIS - EFI NO.2 RELAY)

Wire Harness Side:

VSV for ACIS Connector

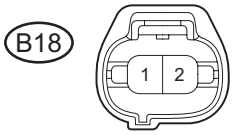

Front View

ECM:

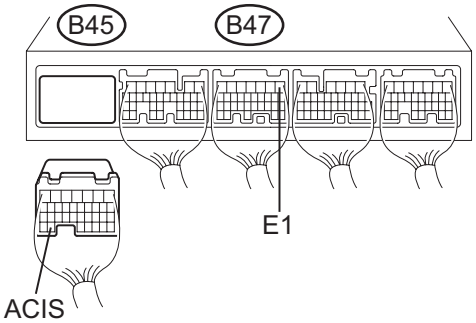

Engine Room R/B and J/B:

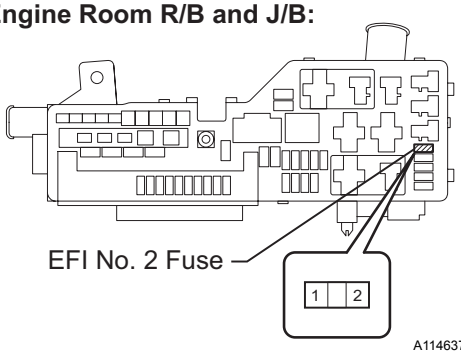

Y A114637E01

(a) Check the wire harness and connectors between the VSV for ACIS and ECM.
(1) Disconnect the B18 VSV for ACIS connector.
(2) Disconnect the B45 ECM connector.
(3) Measure the resistance between the terminals of the VSV for ACIS connector and ECM connector.
Standard resistance (Check for open)

Tester Connections	Specified Conditions
VSV for ACIS (B18-1) - ACIS (B45-33)	Below 1 Ω

Standard resistance (Check for short)

Tester Connections	Specified Conditions
VSV for ACIS (B18-1) or ACIS (B45-33) - E1 (B47-1)	10 kΩ or higher

(4) Reconnect the VSV for ACIS connector.
(5) Reconnect the ECM connector.
(b) Check the wire harness between the VSV for ACIS and EFI relay.
(1) Disconnect the B18 VSV for ACIS connector.
(2) Remove the EFI No. 2 fuse from the engine room R/B and J/B.
(3) Measure the resistance of the VSV for ACIS connector and engine room R/B and J/B (EFI No. 2 fuse).
Standard resistance (Check for open)

Tester Connections	Specified Conditions
VSV for ACIS (B18-2) - Engine Room R/B and J/B (EFI No. 2 relay) (2)	Below 1 Ω

(4) Reconnect the VSV for ACIS connector.
(5) Reinstall the EFI No. 2 fuse.

NG → **REPAIR OR REPLACE HARNESS OR CONNECTOR**

ES

OK

REPLACE ECM

Air Intake Control Circuit

DESCRIPTION

The air cleaner is equipped with two inlets, one of which is opened or closed by the Air Intake Control Valve (AICV). This system reduces intake noise and increases engine power at low to high engine speeds range.

When the engine is operating in the low-to-mid speed range, this control operates the AICV to close one of the air cleaner inlets. When the engine speed is more than 3,600 rpm and the opening angle of the throttle valve is more than 60°, the ECM activates the VSV and opens the AICV.

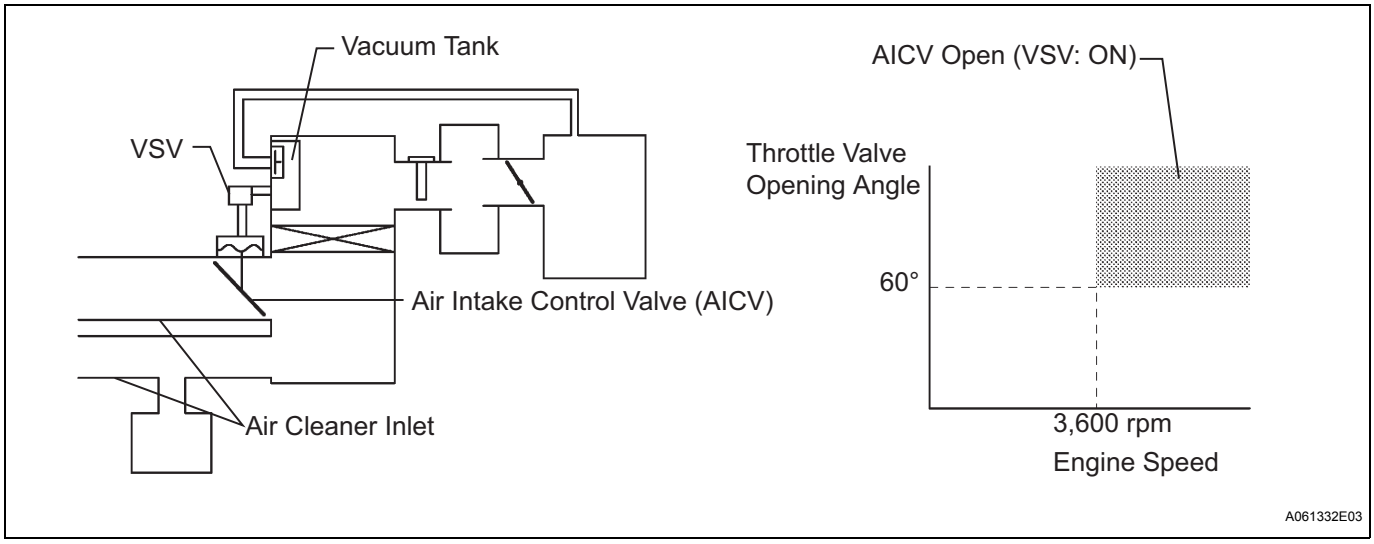

WIRING DIAGRAM

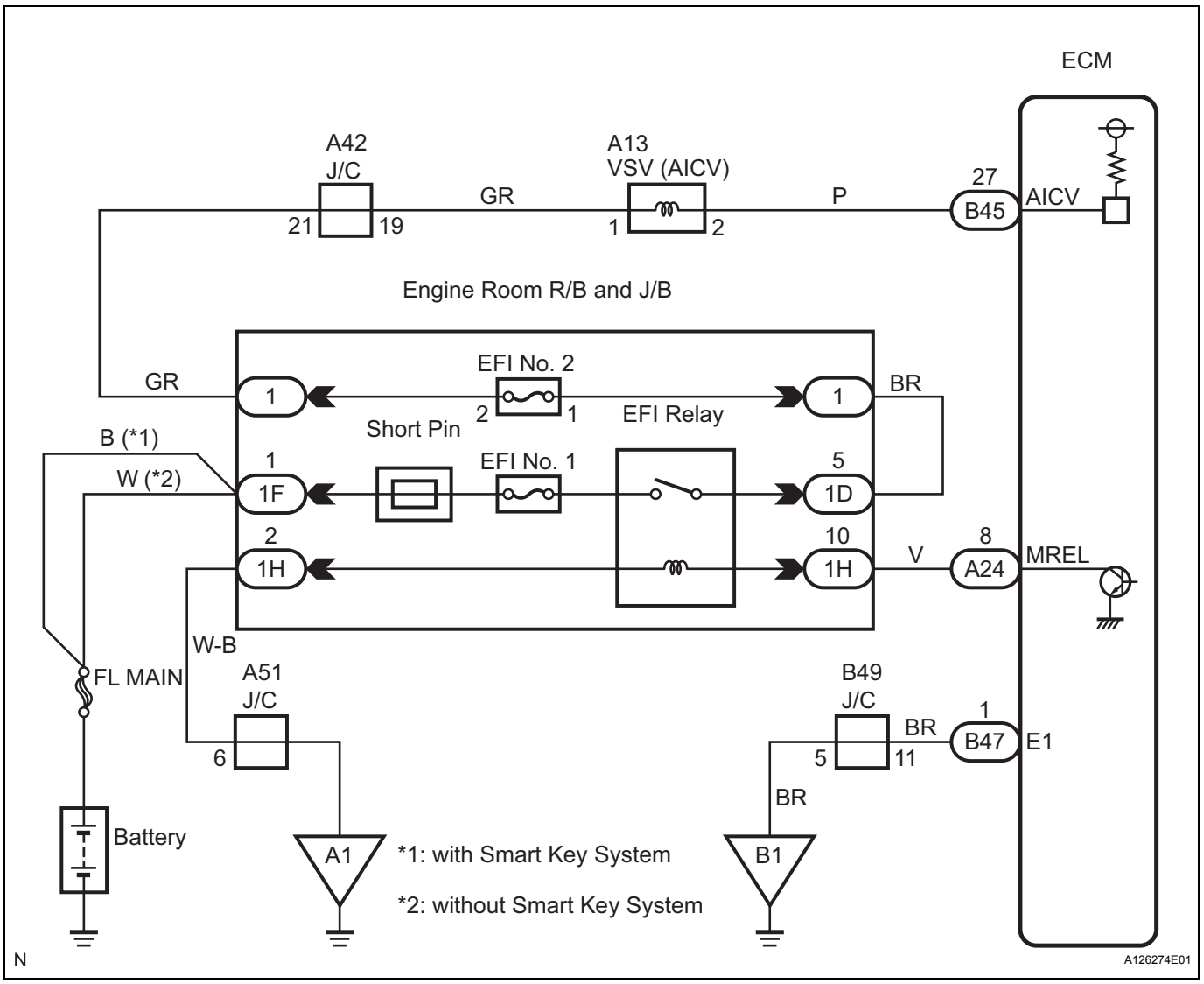

INSPECTION PROCEDURE

1	PERFORM ACTIVE TEST BY INTELLIGENT TESTER (VSV FOR AICV)

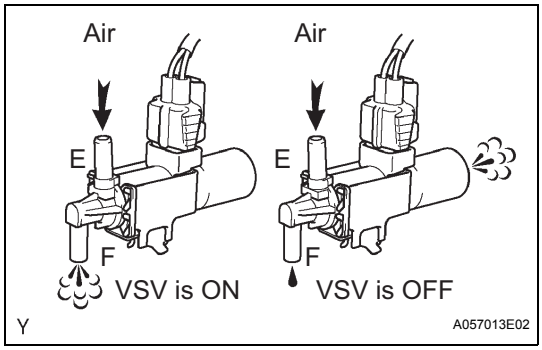

(a) Turn the ignition switch on (IG) and turn the intelligent tester ON.
(b) Select the following menu items: DIAGNOSIS / ENHANCED OBD II / ACTIVE TEST / INTAKE CTL VSV1 and operate the VSV for AICV.
(c) Check the operation of the VSV when the VSV is operated by the intelligent tester.

Standard

Tester Operation	Specified Condition
VSV is ON	Air from port E flows out through port F
VSV is OFF	Air from port E flows out through the air filter

OK	Go to step 4

NG

2	CHECK VSV (FOR AICV)

(a) Inspect the intake air control valve assembly (See page IT-3).

NG → REPLACE INTAKE AIR CONTROL VALVE ASSEMBLY

OK

ES

3	CHECK HARNESS AND CONNECTOR (VSV FOR AICV - ECM, VSV FOR AICV - EFI RELAY)

Wire Harness Side:

VSV for AICV Connector

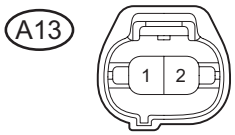

Front View

ECM:

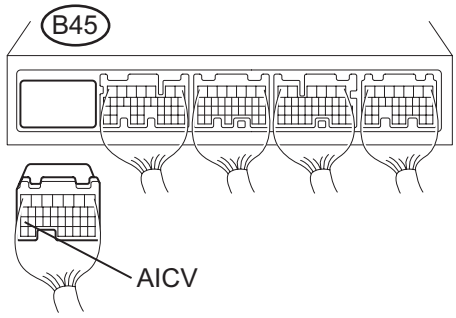

Engine Room Junction Block:

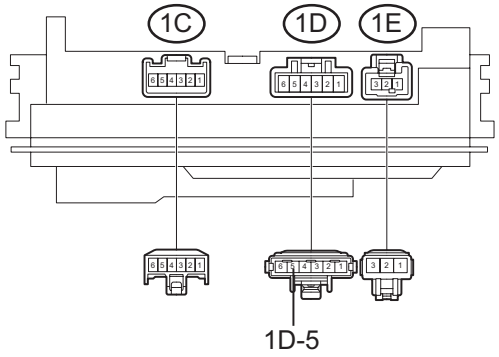

Y

A118973E02

(a) Check the wire harness between the VSV for AICV connector and the ECM connector.
  (1) Disconnect the A13 VSV for AICV connector.
  (2) Disconnect the B45 ECM connector.
  (3) Measure the resistance between the wire harness side connectors.

Standard resistance (Check for open)

Tester Connection	Specified Condition
VSV for AICV (A13-2) - AICV (B45-27)	Below 1 Ω

Standard resistance (Check for short)

Tester Connection	Specified Condition
VSV for AICV (A13-2) or AICV (B45-27) - Body ground	10 kΩ or higher

  (4) Reconnect the ECM connector.

(b) Check the wire harness between the VSV for AICV and the EFI relay.
  (1) Remove the engine room junction block.
  (2) Measure the resistance between the wire harness side connectors.

Standard resistance (Check for open)

Tester Connection	Specified Condition
VSV for AICV (A13-1) - engine room junction block (EFI relay) (1D-5)	Below 1 Ω

  (3) Reconnect the VSV for AICV connector.
  (4) Reinstall the engine room junction block.

NG → REPAIR OR REPLACE HARNESS OR CONNECTOR

OK

4	INSPECT VACUUM TANK

(a) Inspect the vacuum tank (See page IT-3).

NG → REPAIR OR REPLACE AIR CLEANER CAP

OK

REPLACE ECM

MIL Circuit

DESCRIPTION

The MIL (Malfunction Indicator Lamp) is used to indicate vehicle malfunction detections by the ECM.
By turning the ignition switch on (IG), power is supplied to the MIL circuit, and the ECM provides the circuit ground, which illuminates the MIL.
The MIL operation can be checked visually: When the ignition switch is first turned on (IG), the MIL should be illuminated and should then turn off. If the MIL remains illuminated or is not illuminated, conduct the following troubleshooting procedure using the intelligent tester.

WIRING DIAGRAM

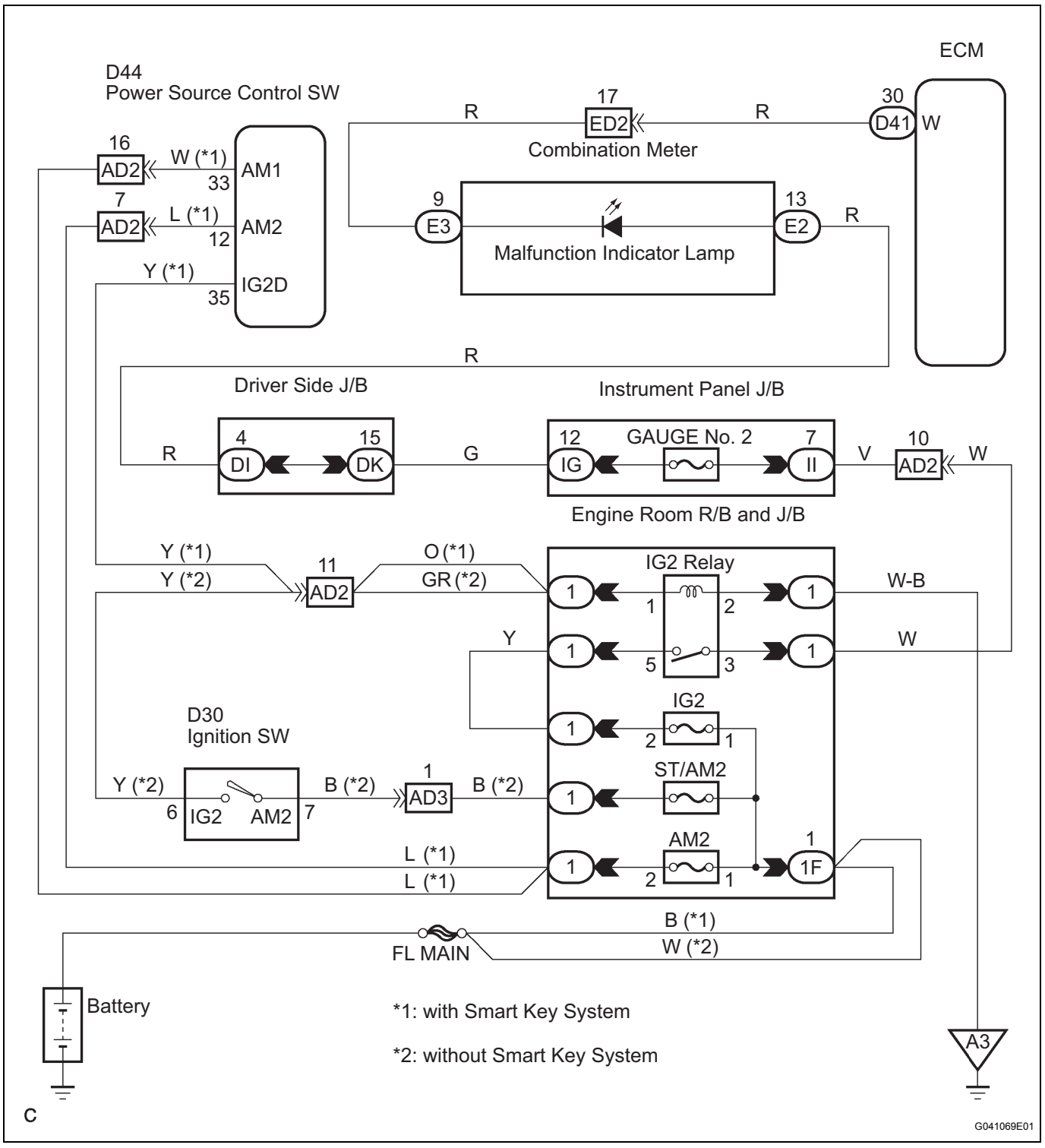

INSPECTION PROCEDURE

HINT:

Troubleshoot each trouble symptom in accordance with the table below.

MIL remains illuminated	Start inspection from step 1
MIL not illuminated	Start inspection from step 3

1	CHECK WHETHER MIL TURNS OFF

(a) Connect the intelligent tester to the DLC3.
(b) Turn the ignition switch on (IG).
(c) Turn the tester on.
(d) Check whether any DTCs have been stored (See page ES-44). Note them down if necessary.
(e) Clear the DTCs (See page ES-44).
(f) Check if the MIL turns off.
OK:
MIL should turn off.

OK → **REPAIR CIRCUIT INDICATED BY OUTPUT DTC**

NG

2	CHECK HARNESS AND CONNECTOR (CHECK FOR SHORT IN WIRE HARNESS)

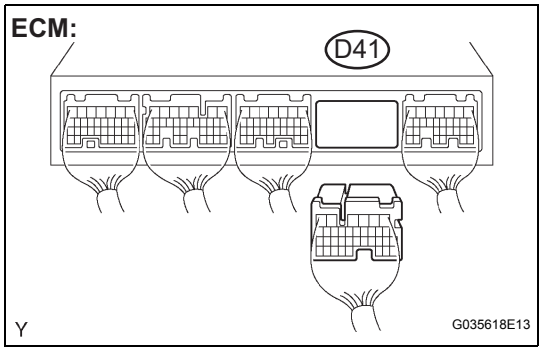

(a) Disconnect the D41 ECM connector.
(b) Turn the ignition switch on (IG).
(c) Check that the MIL is not illuminated.
OK:
MIL is not illuminated.
(d) Reconnect the ECM connector.

OK → **REPLACE ECM**

NG

CHECK AND REPLACE HARNESS AND CONNECTOR (COMBINATION METER - ECM)

3	CHECK THAT MIL IS ILLUMINATED

(a) Check if the MIL is illuminated when the ignition switch is turned on (IG).
OK:
MIL should be illuminated.

OK → **SYSTEM OK**

NG

4	INSPECT COMBINATION METER ASSEMBLY (MIL CIRCUIT)

(a) See the combination meter troubleshooting procedure (See page ME-13).

ES

NG → REPAIR OR REPLACE BULB OR COMBINATION METER ASSEMBLY

OK

CHECK AND REPLACE HARNESS AND CONNECTOR (COMBINATION METER - ECM)

MASS AIR FLOW METER

ON-VEHICLE INSPECTION

1. CHECK MASS AIR FLOW METER

NOTICE:

- **Perform the MAF meter inspection by following the procedures below.**
- **Only replace the MAF meter when both the LONG FT#1 value and MAF value in the DATA LIST (with the engine stopped) are not within the normal operating range.**

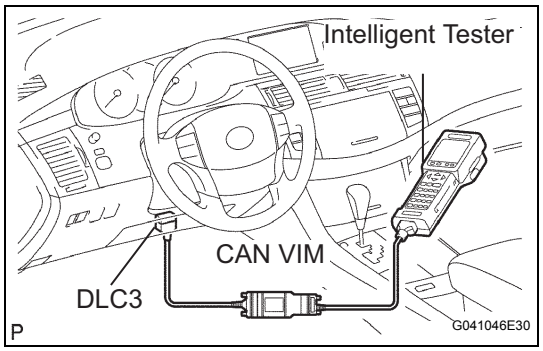

(a) Perform confirmation driving pattern.

(1) Connect the intelligent tester to the DLC3.
(2) Turn the ignition switch ON.
(3) Turn the tester on.
(4) Clear the DTCs (See page ES-44).
(5) Start the engine and warm it up with all accessory switches off (until the engine coolant temperature is 75 °C (167°F) or more).
(6) Drive the vehicle at 31 mph (50 km/h) or more for 3 minutes or more. *1
(7) Let the engine idle (accelerator pedal fulley released) for 2 minutes or more. *2
(8) Perform steps *1 and *2 at least 3 times or more.

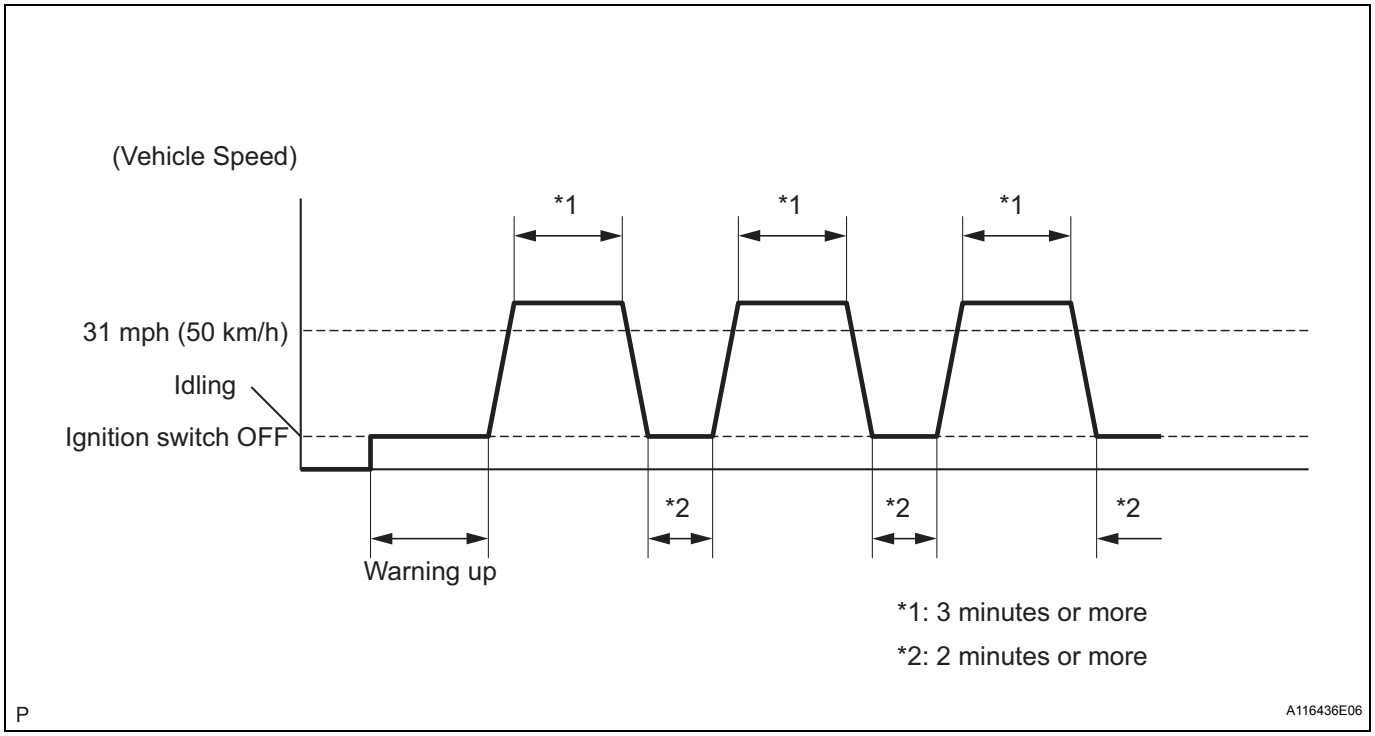

(b) Read value using the intelligent tester (LONG FT#1).

(1) Select the following menu items: DIAGNOSIS / ENHANCED OBD II / DATA LIST / PRIMARY / LONG FT#1.

(2) Read the values displayed on the tester.
Standard value:
Within -15 to +15 %
If the result is not within the specified range, perform the inspection below.

(c) Read value using the intelligent tester (MAF).
NOTICE:
- **Turn off the engine.**
- **Perform the inspection with the vehicle indoors and on a level surface.**
- **Perform the inspection of the MAF meter while it is installed to the air cleaner case (installed to the vehicle).**
- **During the test, do not use the exhaust air duct to perform suction on the exhaust pipe.**

(1) Turn off the engine (do not run the engine).
(2) Turn the ignition switch ON.
(3) Turn the tester on.
(4) Select the following menu items: DIAGNOSIS / ENHANCED OBD II / DATA LIST / PRIMARY / PRIMARY / MAF.
(5) Wait 30 seconds, and read the values on the intelligent tester.
Standard condition:
Less than 0.33 g/s
- If the result is not as specified, replace the MAF meter.
- If the result is within the specified range, inspect the cause of the extremely rich or lean air fuel ratio (See page EC-19).

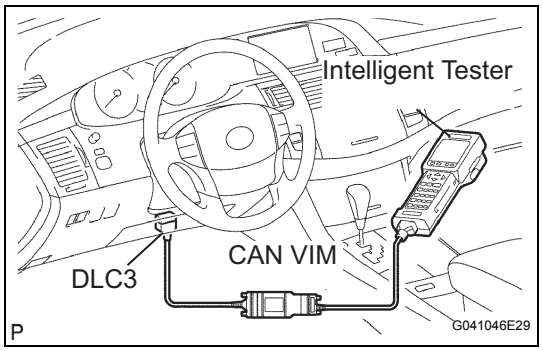

CAMSHAFT TIMING OIL CONTROL VALVE ASSEMBLY

ON-VEHICLE INSPECTION

1. **INSPECT CAMSHAFT TIMING OIL CONTROL VALVE ASSEMBLY**
   (a) Connect the intelligent tester (with CAN VIM) to the DLC3.
   (b) Turn the ignition switch on (IG).
   (c) Start and warm up the engine.
   (d) Connect the intelligent tester and select VVT from the ACTIVE TEST menu.
   (e) Check the engine speed when the OCV is operated by the intelligent tester.
   OK

Condition	Specified Condition
VVT system is OFF (OCV is OFF)	Normal engine speed
VVT system is ON (OCV us ON)	Rough idle or engine stalled

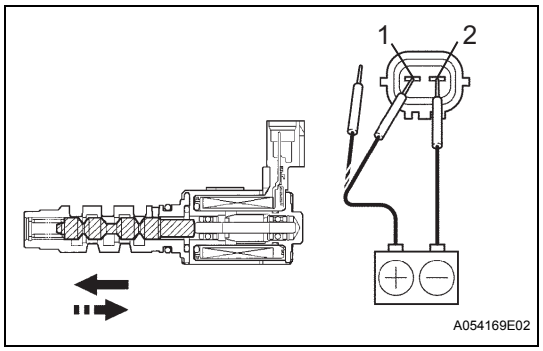

INSPECTION

1. **INSPECT CAMSHAFT TIMING OIL CONTROL VALVE ASSEMBLY**
   (a) Using an ohmmeter, measure the resistance between the terminals.
   (b) Connect the battery's positive (+) lead to terminal 1 and negative (-) lead to terminal 2. Check the movement of the valve.
   OK:

Condition	Result
Battery positive voltage is applied	Valve moves in left arrow direction shown in illustration
Battery positive voltage is cut off	Valve moves in right arrow direction shown in illustration

If operation is not as specified, replace the valve.

CRANKSHAFT POSITION SENSOR

COMPONENTS

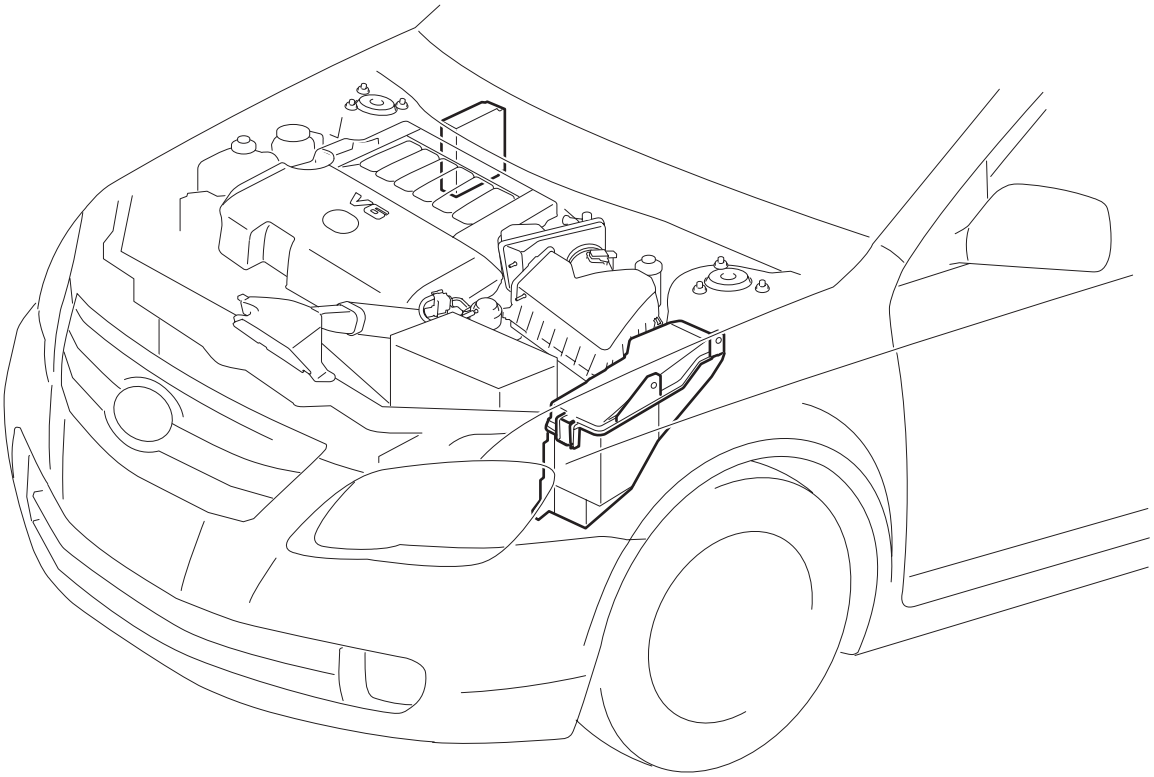

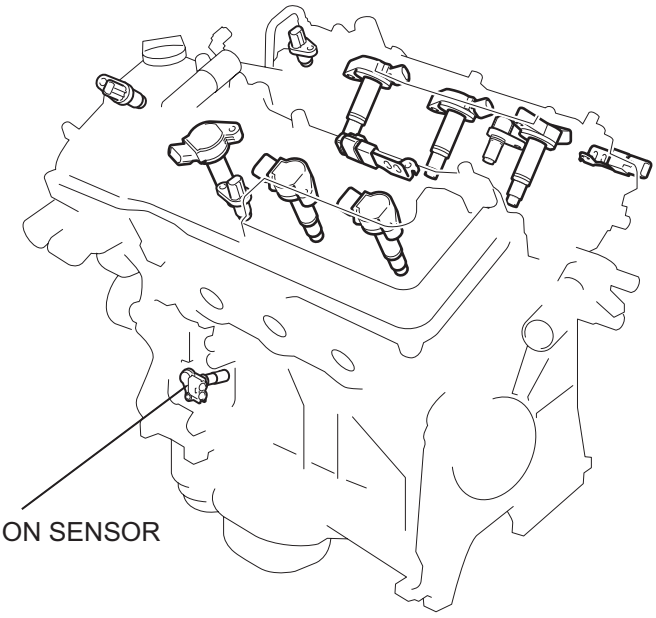

T

A114593E03

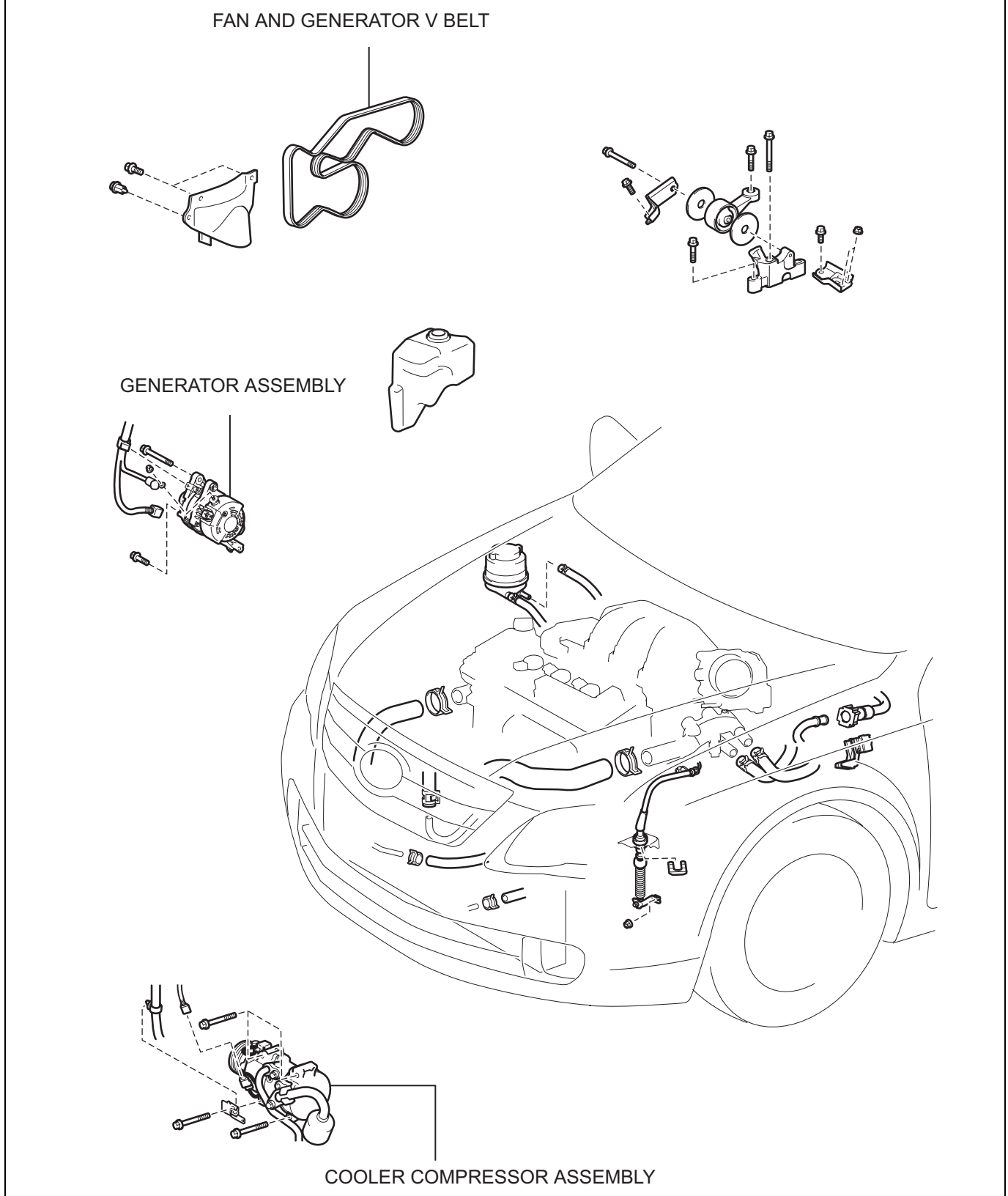
FAN AND GENERATOR V BELT
GENERATOR ASSEMBLY
COOLER COMPRESSOR ASSEMBLY
T
A114559E06

ES

REMOVAL

1. **DISCONNECT CABLE FROM NEGATIVE BATTERY TERMINAL**
2. **REMOVE FAN AND GENERATOR V BELT (See page EM-28)**
3. **REMOVE GENERATOR ASSEMBLY (See page CH-9)**
4. **DISCONNECT COOLER COMPRESSOR ASSEMBLY (See page EM-32)**
5. **REMOVE CRANKSHAFT POSITION SENSOR**
   (a) Disconnect the crankshaft position sensor connector.
   (b) Remove the bolt and crankshaft position sensor.

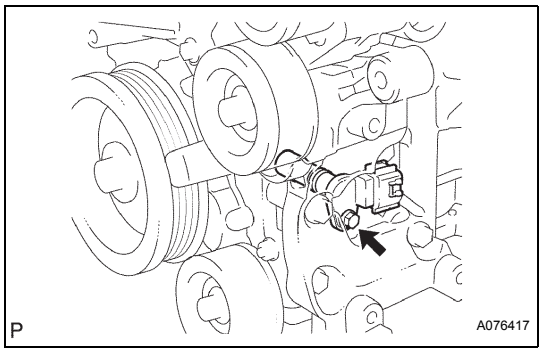

INSPECTION

1. **INSPECT CRANKSHAFT POSITION SENSOR**
   (a) Using an ohmmeter, measure the resistance between the terminals.
   Resistance:
   1,630 to 2,740 Ω at cold
   2,065 to 3,225 Ω at hot

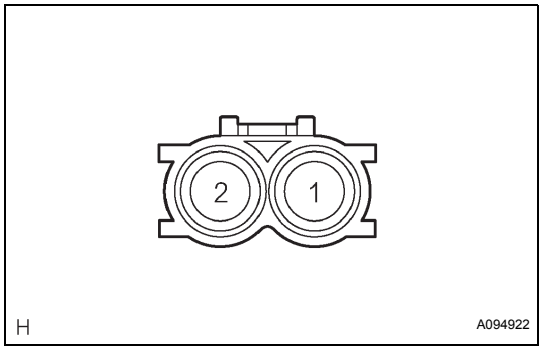

INSTALLATION

1. **INSTALL CRANKSHAFT POSITION SENSOR**
   (a) Apply a light coat of engine oil to the O-ring of the crankshaft position sensor.
   (b) Install the crankshaft position sensor with the bolt.
   Torque: 10 N*m (102 kgf*cm, 7 ft.*lbf)
   (c) Connect the crankshaft position sensor connector.
2. **INSTALL COOLER COMPRESSOR ASSEMBLY (See page EM-41)**
3. **INSTALL GENERATOR ASSEMBLY (See page CH-15)**
4. **INSTALL FAN AND GENERATOR V BELT (See page EM-46)**
5. **CONNECT CABLE TO NEGATIVE BATTERY TERMINAL**
6. **PERFORM SYSTEM INITIALIZE**
   Some systems need initialization when disconnecting the cable from the negative battery terminal.

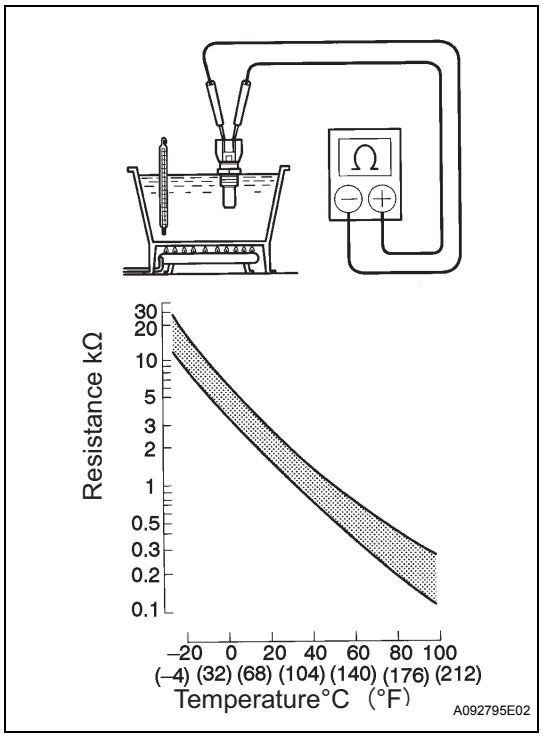

ENGINE COOLANT TEMPERATURE SENSOR

INSPECTION

1. INSPECT ENGINE COOLANT TEMPERATURE SENSOR

(a) Measure the resistance between the terminals.
Resistance

Condition	Specified Condition
Approx. 20°C (68°F)	2.32 to 2.59 kΩ
Approx. 80°C (176°F)	0.31 to 0.326 kΩ

If the result is not as specified, replace the sensor.
NOTICE:
If checking the ECT sensor in the water, keep the terminals dry. After the check, wipe the sensor.

ES

THROTTLE BODY

COMPONENTS

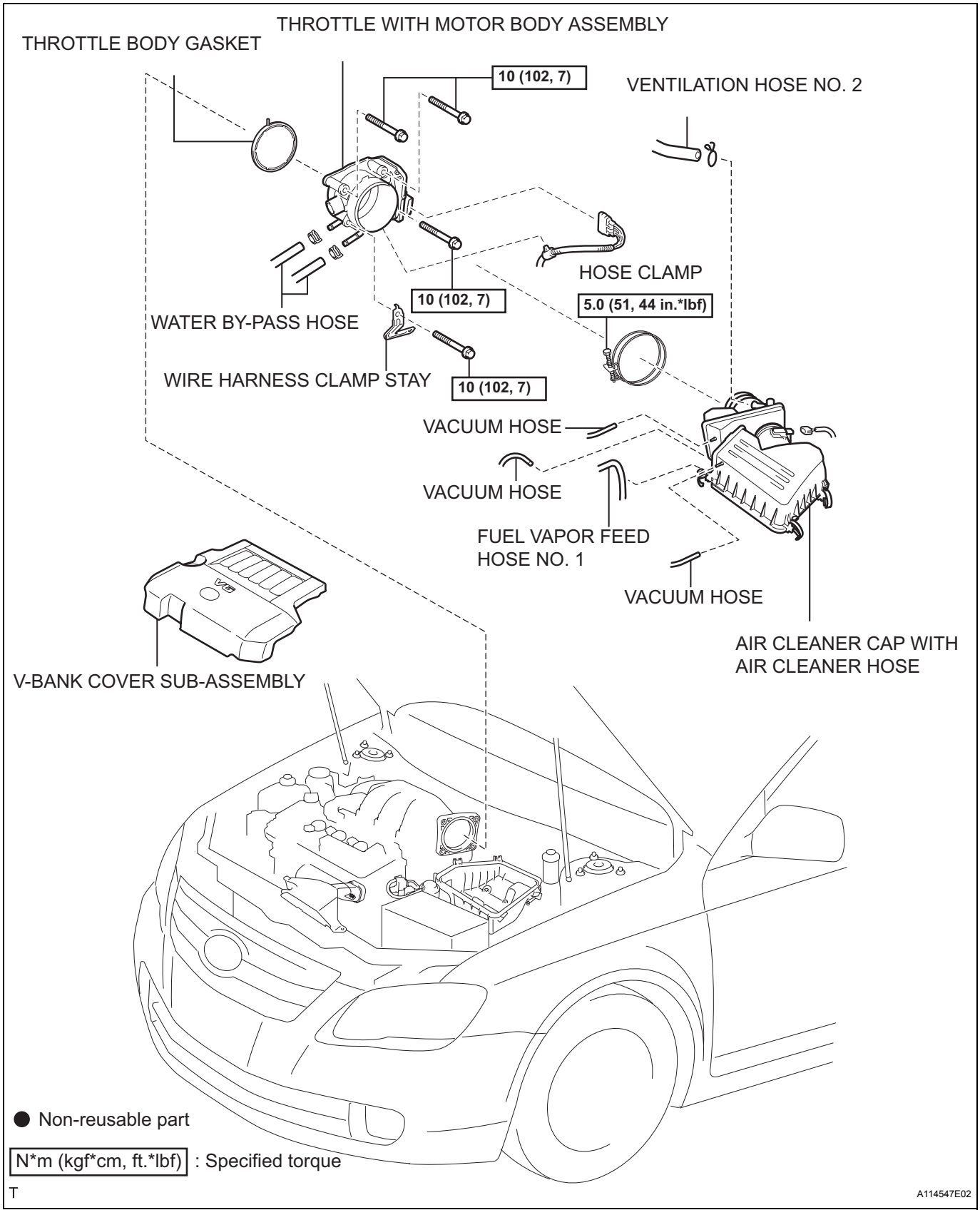

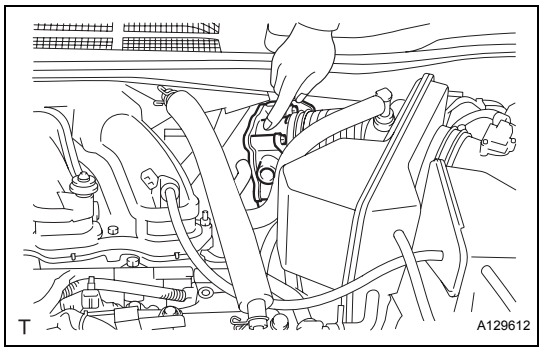

ON-VEHICLE INSPECTION

1. INSPECTION THROTTLE BODY

(a) Inspect the throttle control motor for operating sound.
  (1) Turn the ignition switch on (IG).
  (2) When turning the accelerator pedal position sensor lever, check the running sound of the motor. The motor should be running smoothly without friction sounds.
  If operation is not as specified, check the throttle control motor, wiring and ECM (See page ES-434).

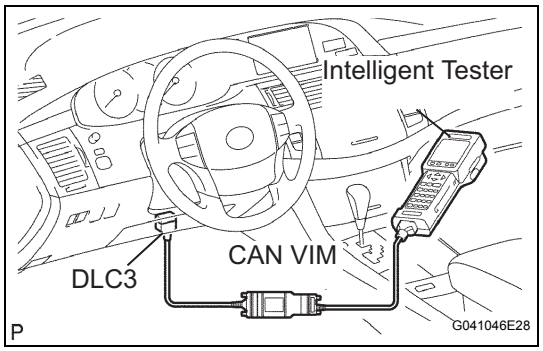

(b) Inspect the throttle position sensor.
  (1) Connect the intelligent tester (with CAN VIM) to the DLC3.
  (2) Turn the ignition switch on (IG).
  (3) Check that the MIL does not light up.
  (4) Check that, under the CURRENT DATA, THROTTLE POS (throttle valve opening percentage) is within the standard value below.
  Standard throttle valve opening percentage:
  60 % or more
  If operation is not as specified, check the throttle position sensor, wiring and ECM (See page ES-434).

ES

ES

REMOVAL

1. **DRAIN ENGINE COOLANT (See page CO-7)**
2. **DISCONNECT CABLE FROM NEGATIVE BATTERY TERMINAL**
3. **REMOVE V-BANK COVER SUB-ASSEMBLY (See page FU-12)**
4. **REMOVE AIR CLEANER CAP WITH AIR CLEANER HOSE (See page FU-12)**
5. **SEPARATE WATER BY-PASS HOSE**
   (a) Disconnect the 2 water by-pass hoses from the throttle w/ motor body assembly.

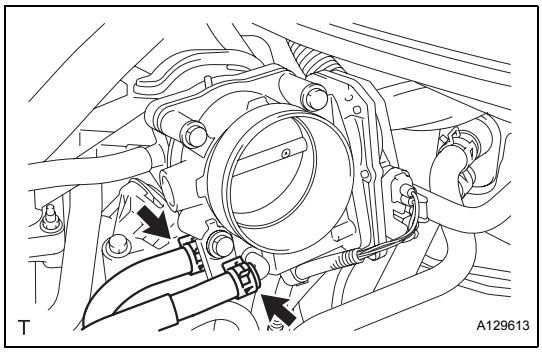

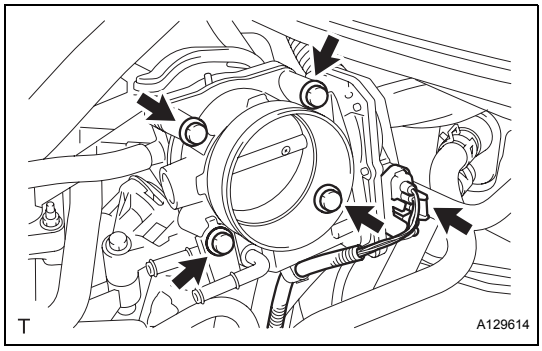

6. **REMOVE THROTTLE WITH MOTOR BODY ASSEMBLY**
   (a) Disconnect the throttle w/ motor body assembly connector.
   (b) Remove the 4 bolts and throttle w/ motor body assembly from the intake air surge tank.
   (c) Remove the throttle body gasket from the intake air surge tank.

INSPECTION

1. **INSPECT THROTTLE WITH MOTOR BODY ASSEMBLY**
   (a) Measure the resistance between the terminals.
   Resistance

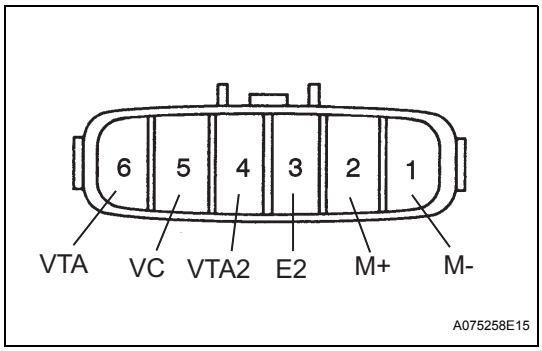

Tester Connection	Condition	Specified Condition
2 (M+) - 1 (M-)	20°C (68°F)	0.3 to 100 Ω
5 (VC) - 3 (E2)	20°C (68°F)	1.2 to 3.2 kΩ

If the result is not as specified, replace the throttle body assembly.

INSTALLATION

1. **INSTALL THROTTLE WITH MOTOR BODY ASSEMBLY**
   (a) Install a new throttle body gasket to the intake air surge tank.

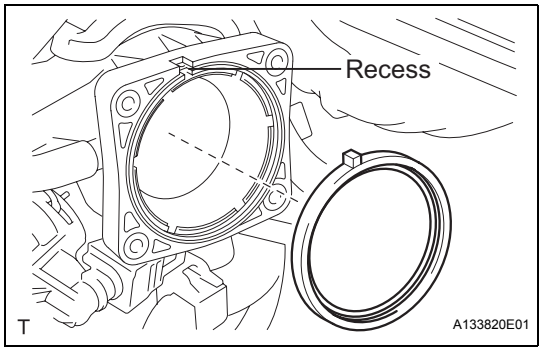

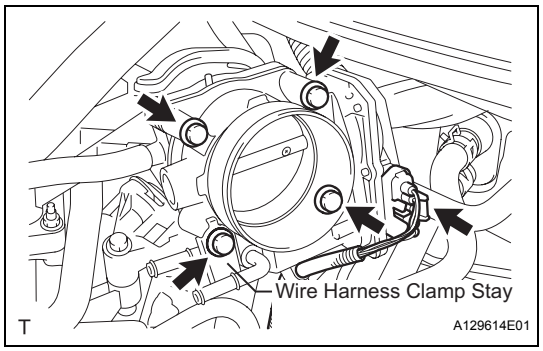

(b) Install the throttle w/ motor body assembly and wire harness clamp stay to the intake air surge tank with the 4 bolts.
Torque: 10 N*m (102 kgf*cm, 7 ft.*lbf)

(c) Connect the throttle w/ motor body assembly connector.

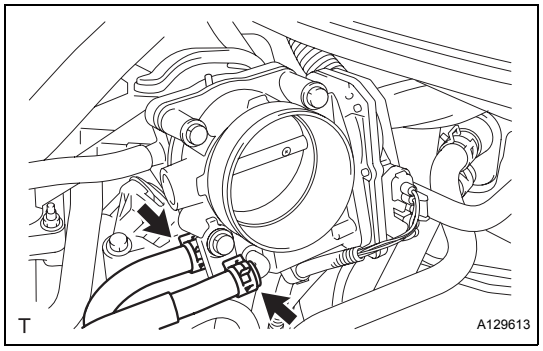

2. CONNECT WATER BY-PASS HOSE

(a) Connect the 2 water by-pass hoses to the throttle w/ motor body assembly.

3. INSTALL AIR CLEANER CAP WITH AIR CLEANER HOSE (See page FU-18)

4. CONNECT CABLE TO NEGATIVE BATTERY TERMINAL

5. ADD ENGINE COOLANT (See page CO-7)

6. CHECK FOR ENGINE COOLANT LEAKS (See page CO-8)

7. INSTALL V-BANK COVER SUB-ASSEMBLY (See page FU-19)

8. PERFORM SYSTEM INITIALIZE

Some systems need initialization when disconnecting the battery terminal.

9. CHECK FUNCTION OF THROTTLE BODY (See page ES-433)

ES

KNOCK SENSOR

COMPONENTS

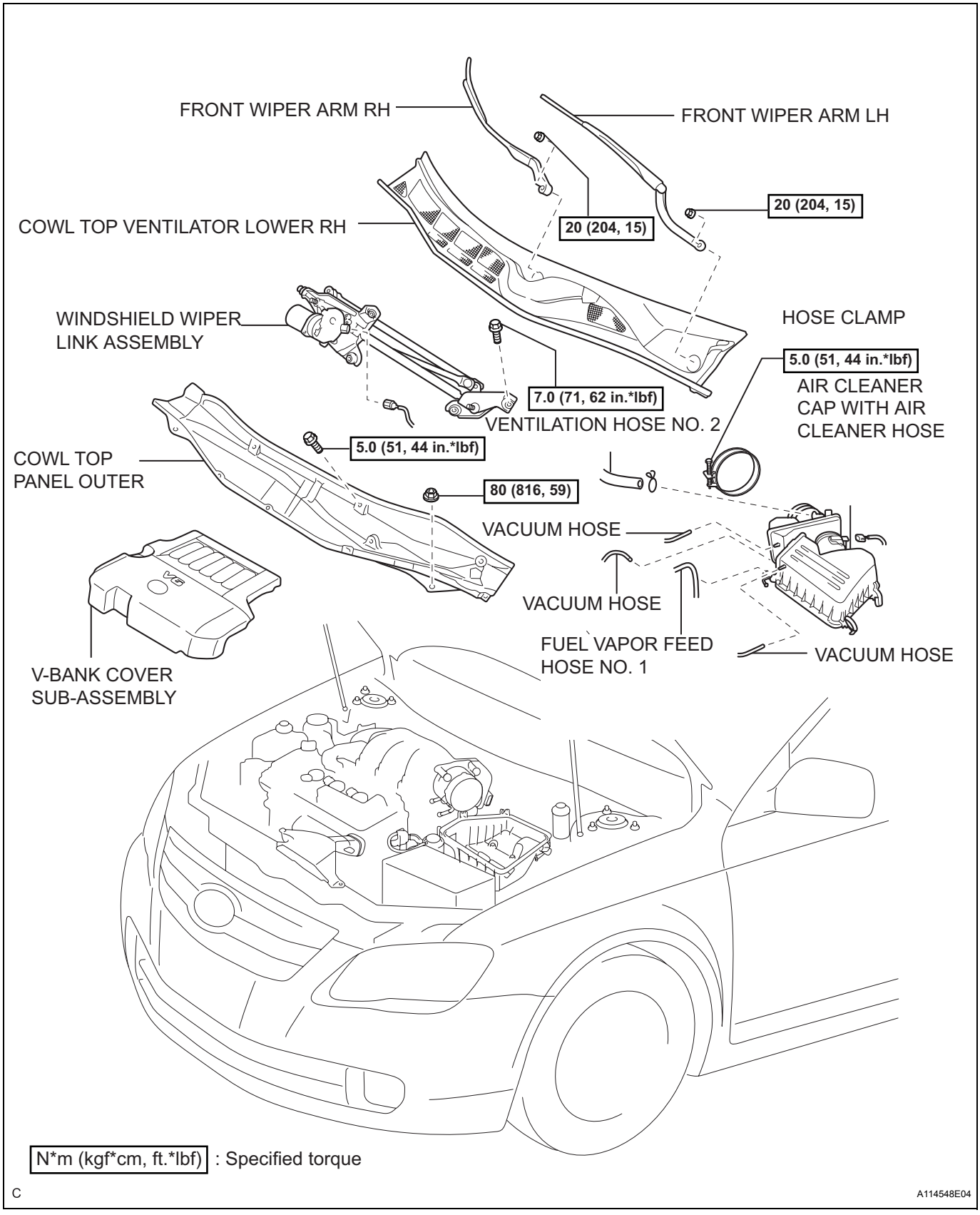

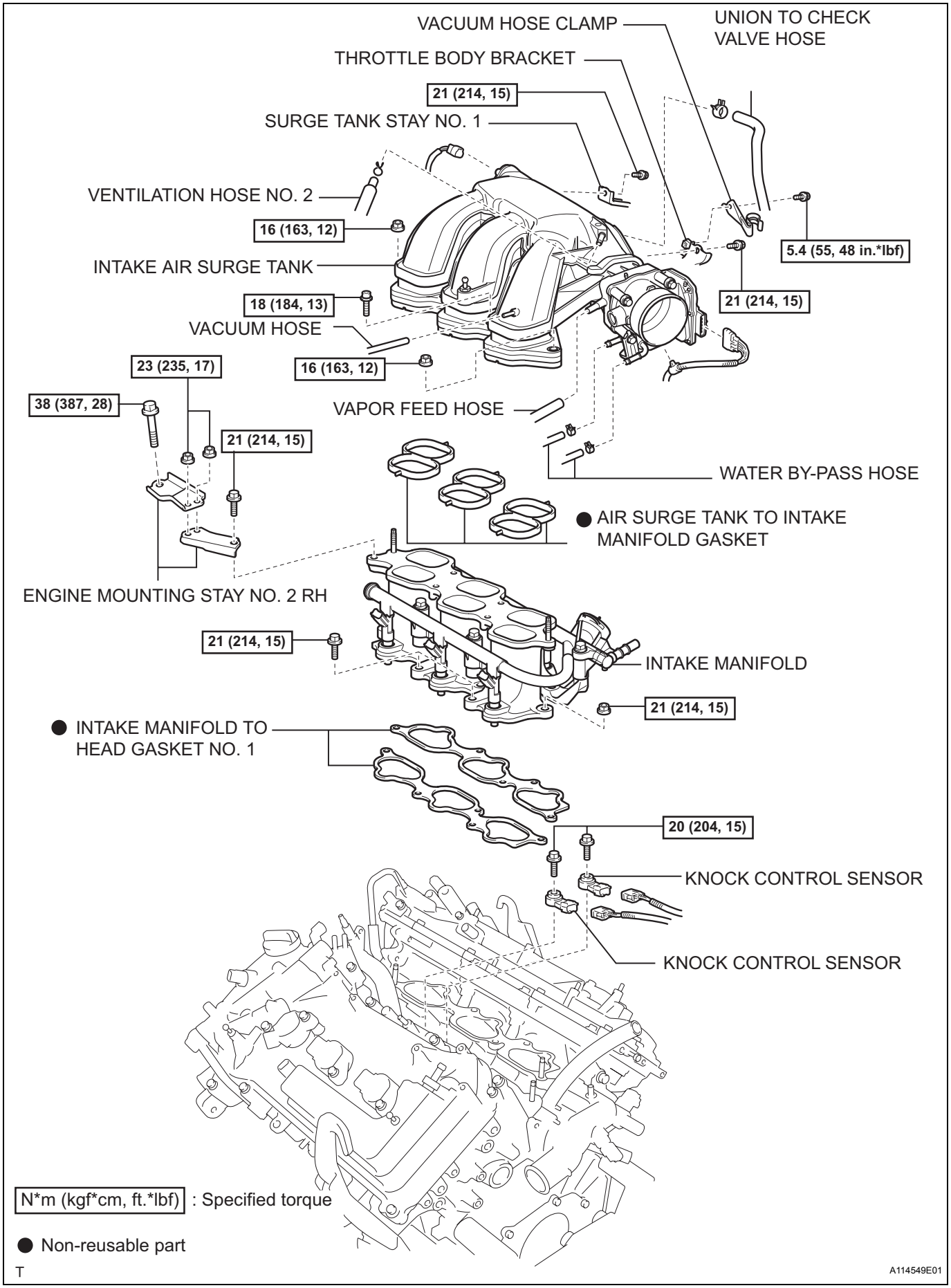
VACUUM HOSE CLAMP
UNION TO CHECK VALVE HOSE
THROTTLE BODY BRACKET
21 (214, 15)
SURGE TANK STAY NO. 1
VENTILATION HOSE NO. 2
16 (163, 12)
INTAKE AIR SURGE TANK
5.4 (55, 48 in.*lbf)
18 (184, 13)
21 (214, 15)
VACUUM HOSE
16 (163, 12)
23 (235, 17)
38 (387, 28)
VAPOR FEED HOSE
21 (214, 15)
WATER BY-PASS HOSE
● AIR SURGE TANK TO INTAKE MANIFOLD GASKET
ENGINE MOUNTING STAY NO. 2 RH
21 (214, 15)
INTAKE MANIFOLD
21 (214, 15)
● INTAKE MANIFOLD TO HEAD GASKET NO. 1
20 (204, 15)
KNOCK CONTROL SENSOR
KNOCK CONTROL SENSOR
N*m (kgf*cm, ft.*lbf) : Specified torque
● Non-reusable part
T
A114549E01

ES

ES

REMOVAL

1. **PREVENT GASOLINE FROM SPILLING OUT**
2. **DISCONNECT CABLE FROM NEGATIVE BATTERY TERMINAL**
3. **DRAIN ENGINE COOLANT (See page CO-7)**
4. **REMOVE WINDSHIELD WIPER MOTOR & LINK ASSEMBLY (See page WW-38)**
5. **REMOVE COWL TOP PANEL OUTER (See page BR-20)**
6. **REMOVE V-BANK COVER SUB-ASSEMBLY (See page FU-12)**
7. **REMOVE AIR CLEANER CAP WITH AIR CLEANER HOSE (See page FU-12)**
8. **REMOVE INTAKE AIR SURGE TANK (See page FU-12)**
9. **REMOVE INTAKE MANIFOLD**
10. **REMOVE KNOCK CONTROL SENSOR**
    (a) Disconnect the 2 knock control sensor connectors.
    (b) Remove the 2 bolts and 2 knock control sensors.

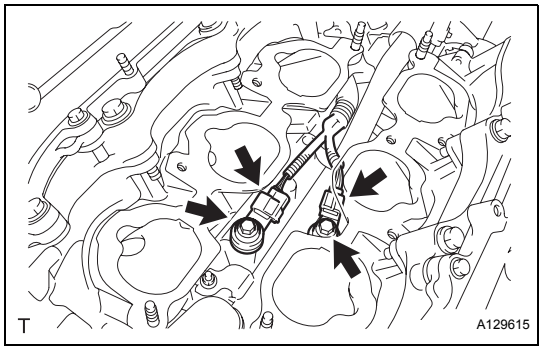

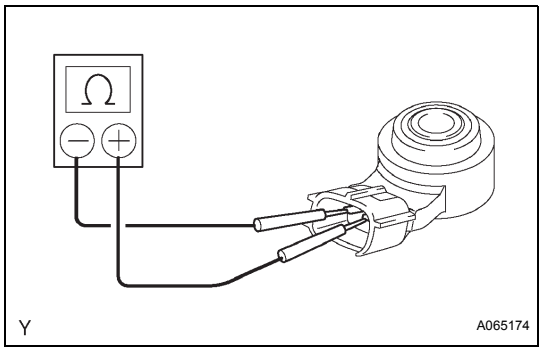

INSPECTION

1. **INSPECT KNOCK CONTROL SENSOR**
   (a) Using an ohmmeter, measure the resistance between the terminals.
   Resistance:
   120 to 280 kΩ at 20°C (68°F)
   If the result is not as specified, replace the sensor.

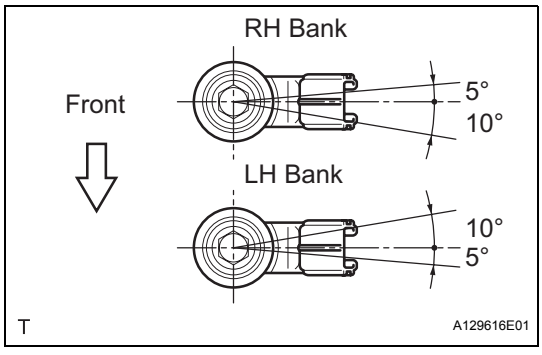

INSTALLATION

1. **INSTALL KNOCK CONTROL SENSOR**
   (a) Install the 2 knock control sensors with the 2 bolts as shown in the illustration.
   Torque: 20 N*m (204 kgf*cm, 15 ft.*lbf)
   (b) Connect the 2 knock control sensor connectors.
2. **INSTALL INTAKE MANIFOLD**
3. **INSTALL INTAKE AIR SURGE TANK**
4. **INSTALL AIR CLEANER CAP WITH AIR CLEANER HOSE**

5. **CONNECT CABLE TO NEGATIVE BATTERY TERMINAL**
6. **ADD ENGINE COOLANT (See page CO-7)**
7. **CHECK FOR ENGINE COOLANT LEAKS (See page CO-8)**
8. **INSPECT FOR FUEL LEAKS (See page FU-7)**
9. **INSTALL V-BANK COVER SUB-ASSEMBLY (See page FU-19)**
10. **INSTALL COWL TOP PANEL OUTER (See page BR-23)**
11. **INSTALL WINDSHIELD WIPER MOTOR & LINK ASSEMBLY (See page WW-40)**
12. **PERFORM SYSTEM INITIALIZE**
    Some systems need initialization when disconnecting the battery terminal.
13. **CHECK FUNCTION OF THROTTLE BODY (See page ES-433)**

EFI RELAY

INSPECTION

1. INSPECT EFI RELAY

(a) Inspect EFI relay

(1) Using an ohmmeter, measure the resistance between the terminals.

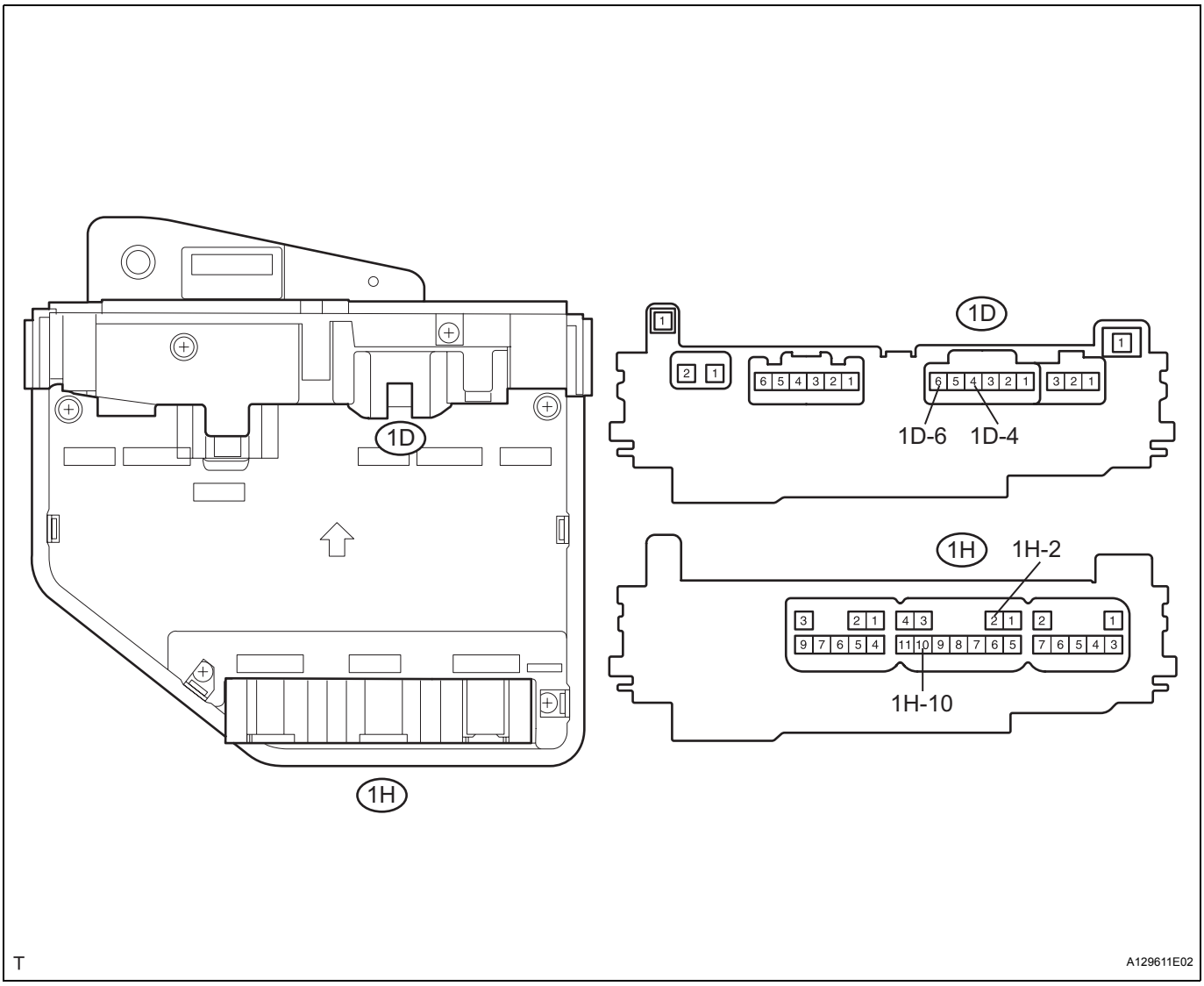

Resistance

Tester Connection	Specified Condition
1D-4 - 1D-6	10 kΩ or higher
1D-4 - 1D-6	Below 1 Ω (Apply battery voltage to terminals 1H-10 and 1H-2)

If the result is not as specified, replace the engine room junction block assembly.

CIRCUIT OPENING RELAY

INSPECTION

1. INSPECT CIRCUIT OPENING RELAY

(a) Inspect circuit opening relay

(1) Using an ohmmeter, measure the resistance between the terminals.

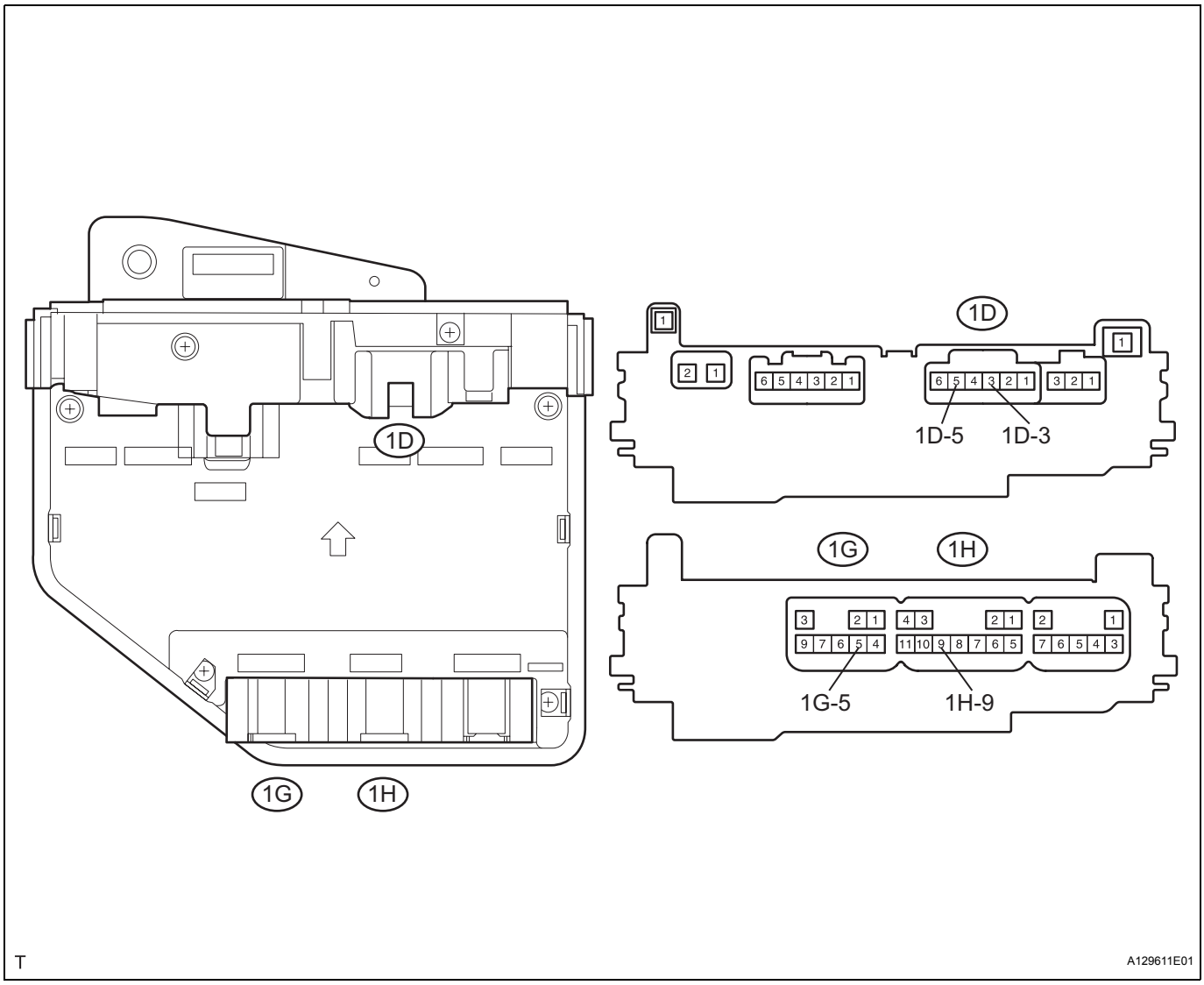

Resistance

Tester Connection	Specified Condition
1D-5 - 1D-3	10 kΩ or higher
1D-5 - 1D-3	Below 1 Ω (Apply battery voltage to terminals 1G-5 and 1H-9)

If the result is not as specified, replace the engine room junction block assembly.

AIR FUEL RATIO SENSOR RELAY

INSPECTION

1. INSPECT AIR FUEL RATIO SENSOR RELAY

(a) Inspect A/F relay

(1) Using an ohmmeter, measure the resistance between the terminals.

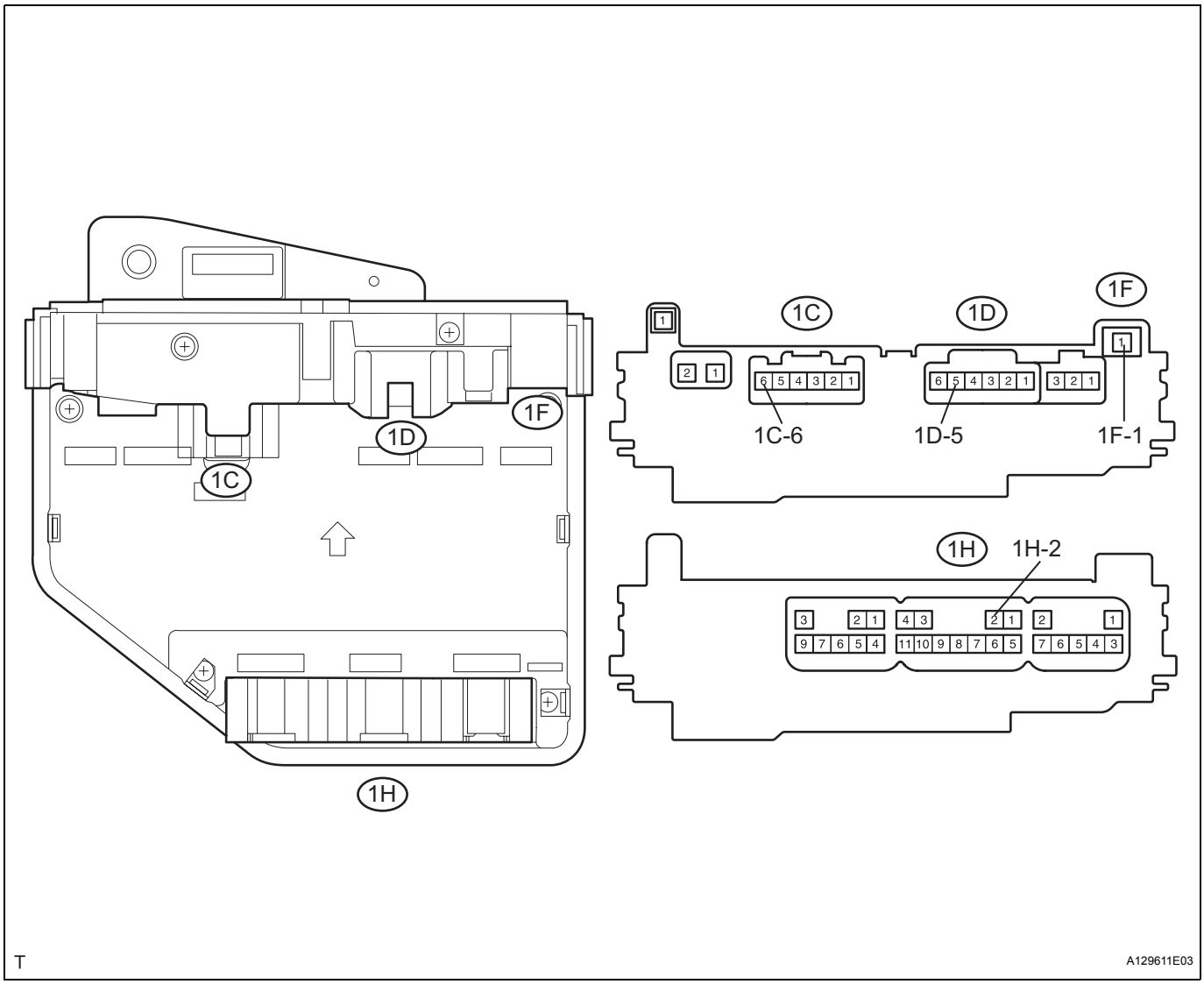

Resistance

Tester Connection	Specified Condition
1F-1 - 1C-6	10 kΩ or higher
1F-1 - 1C-6	Below 1 Ω (Apply battery voltage to terminals 1D-5 and 1H-2)

If the result is not as specified, replace the engine room junction block assembly.

ECM

COMPONENTS

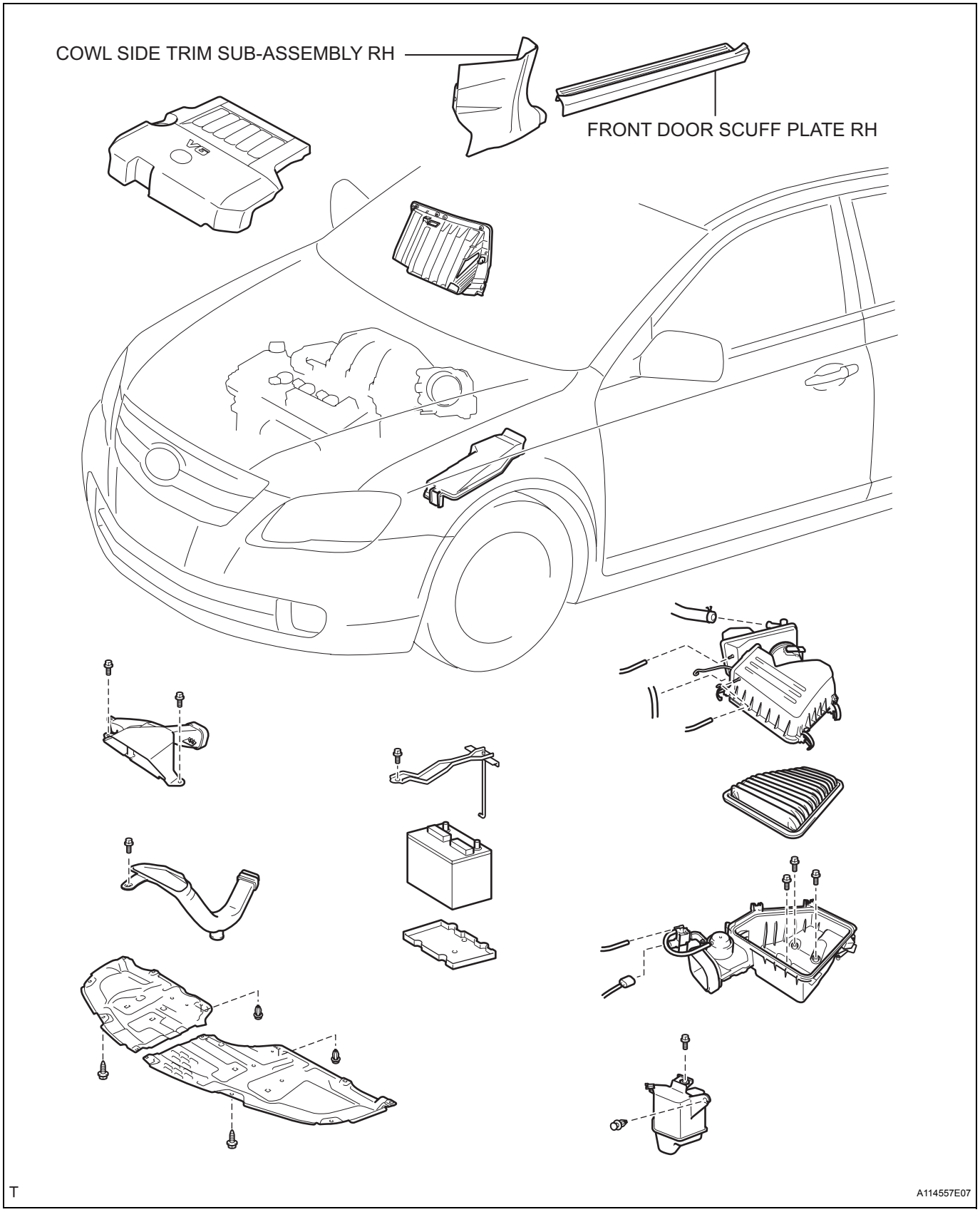

ES

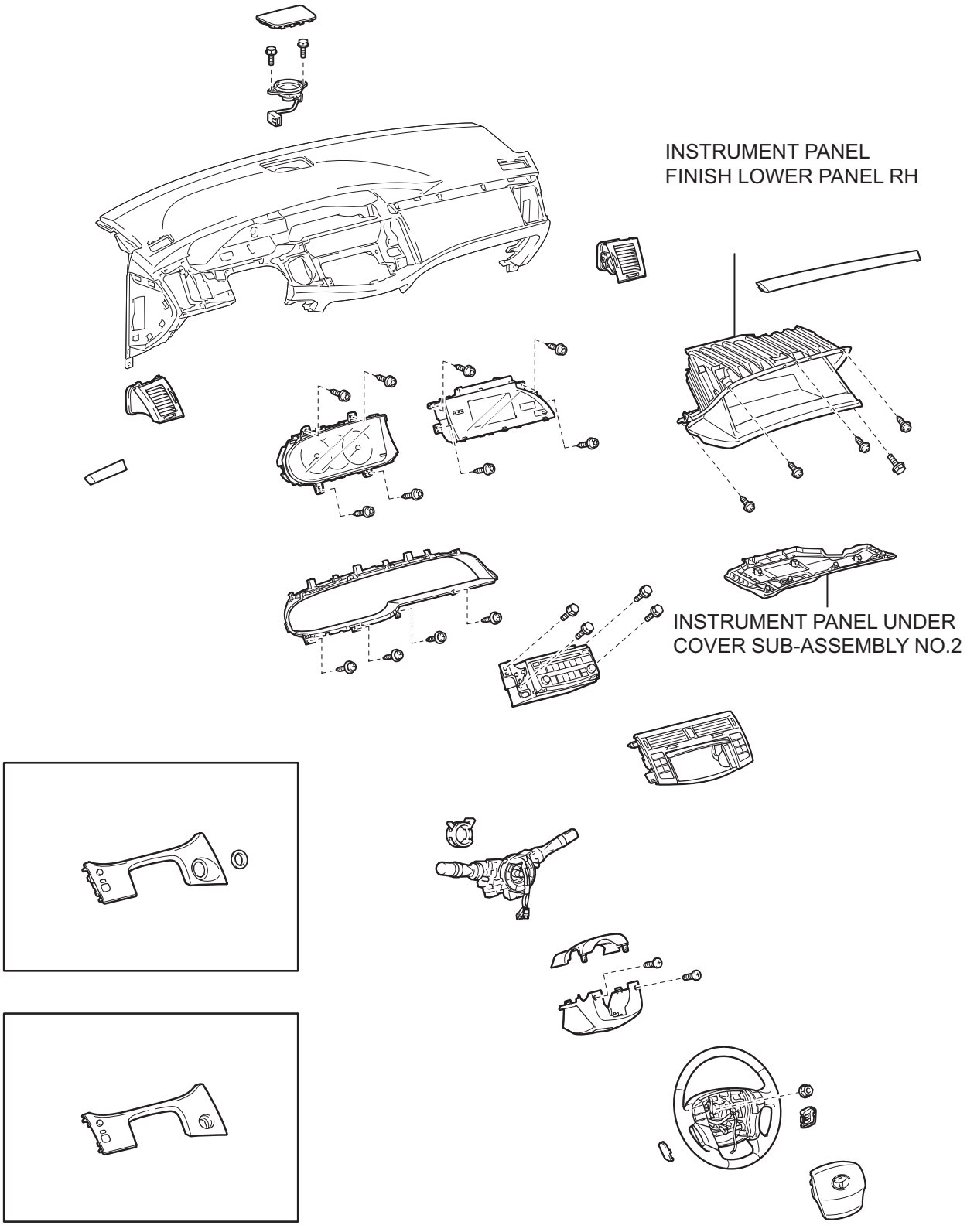
INSTRUMENT PANEL
FINISH LOWER PANEL RH
INSTRUMENT PANEL UNDER
COVER SUB-ASSEMBLY NO.2
P
B115007E09

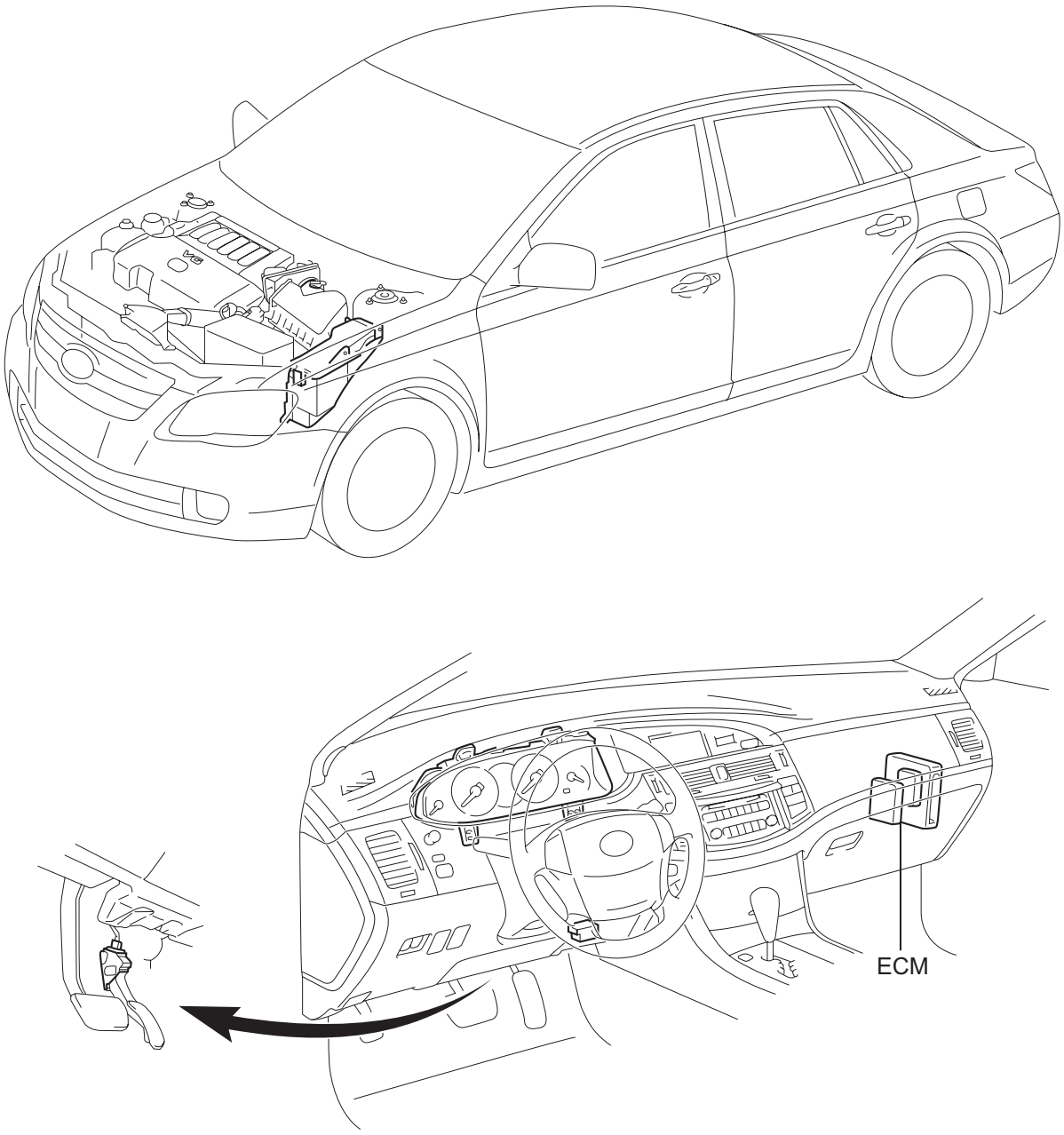

C

A114545E01

ES

REMOVAL

1. **DISCONNECT CABLE FROM NEGATIVE BATTERY TERMINAL**
2. **REMOVE FRONT DOOR SCUFF PLATE RH (See page IR-12)**
3. **REMOVE COWL SIDE TRIM SUB-ASSEMBLY RH (See page IR-12)**
4. **REMOVE INSTRUMENT PANEL UNDER COVER SUB-ASSEMBLY NO.2 (See page IP-11)**
5. **REMOVE INSTRUMENT PANEL FINISH LOWER PANEL RH (See page IP-11)**
6. **REMOVE ECM**
   (a) Disconnect the 5 connectors from the ECM.
   (b) Remove the 2 nuts, bolt and ECM.
   (c) Remove the 2 screws to separate the ECM bracket from the ECM.
   (d) Remove the 2 screws to separate the ECM bracket No. 2 from the ECM.

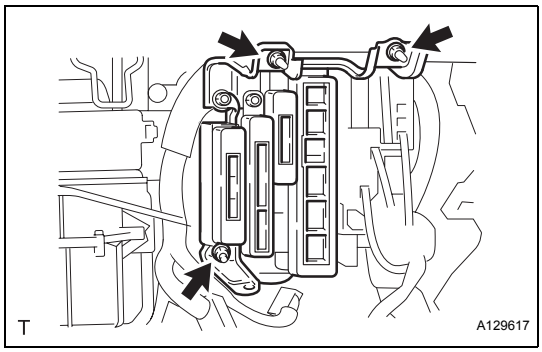

INSTALLATION

1. **INSTALL ECM**
   (a) Install the ECM bracket No. 2 to the ECM with the 2 screws.
   (b) Install the ECM bracket to the ECM with the 2 screws.
   (c) Install the ECM with the 2 nuts and bolt.
   Torque: 5.5 N*m (56 kgf*cm, 49 in.*lbf)
   (d) Connect the 5 connectors to the ECM.
2. **CONNECT CABLE TO NEGATIVE BATTERY TERMINAL**
3. **INSTALL GLOVE COMPARTMENT DOOR ASSEMBLY**
4. **INSTALL INSTRUMENT PANEL UNDER COVER SUB-ASSEMBLY NO.2**
5. **INSTALL COWL SIDE TRIM SUB-ASSEMBLY RH**
6. **INSTALL FRONT DOOR SCUFF PLATE RH**
7. **PERFORM SYSTEM INITIALIZE**
   Some systems need initialization when disconnecting the battery terminal.

ACCELERATOR PEDAL

COMPONENTS

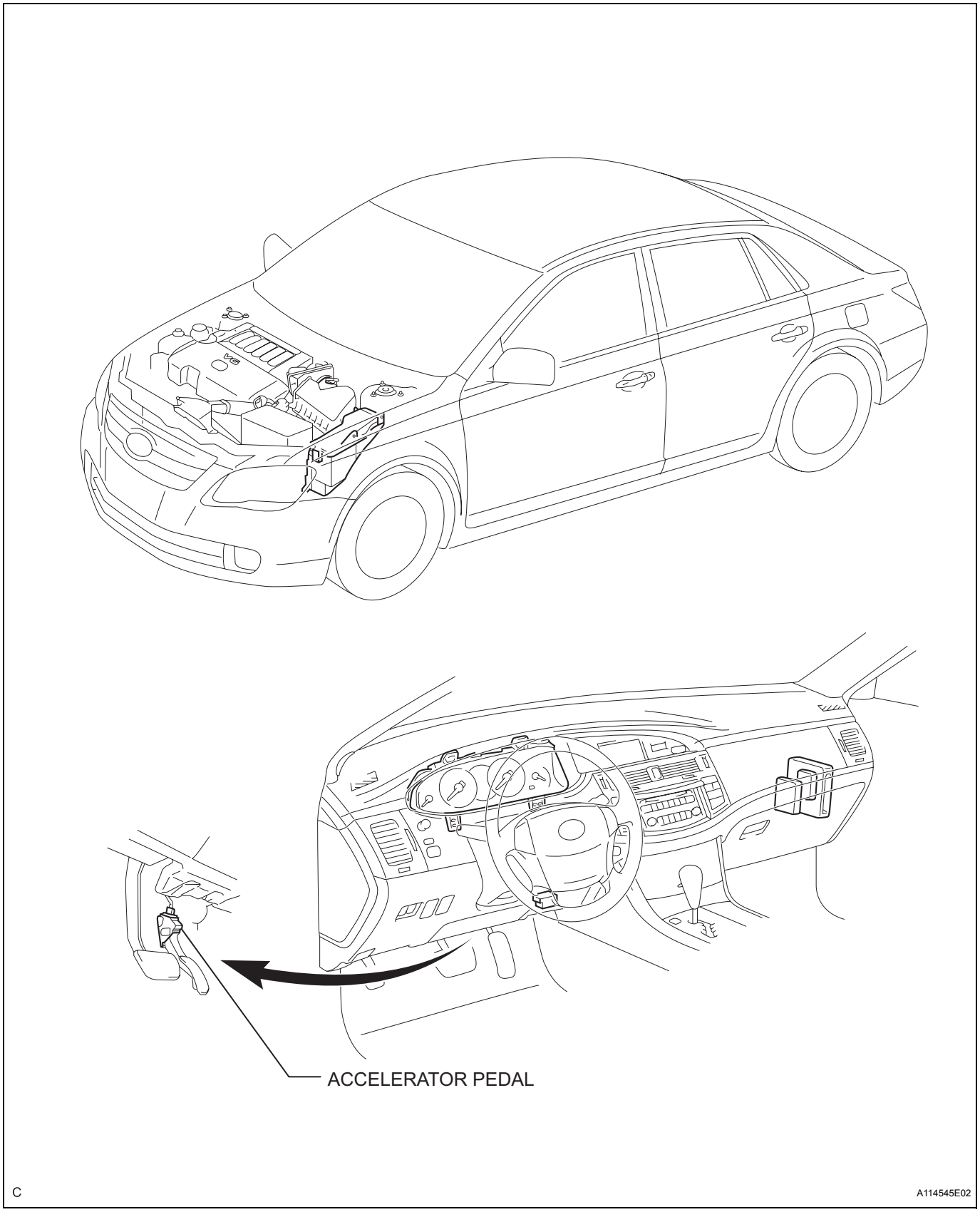

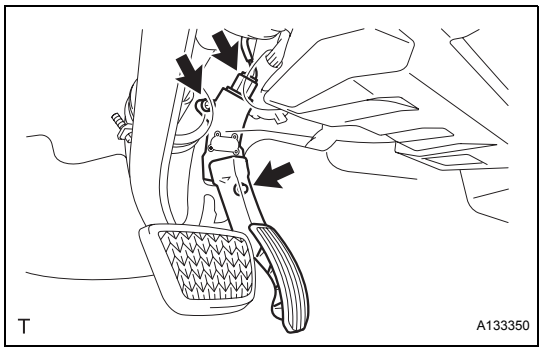

REMOVAL

1. REMOVE ACCELERATOR PEDAL

(a) Disconnect the accelerator pedal connector.

(b) Remove the 2 nuts and the accelerator pedal assembly.

INSTALLATION

1. **INSTALL ACCELERATOR PEDAL**
   NOTICE:
   - **Avoid physical shock to the accelerator pedal assembly.**
   - **Do not disassemble the accelerator pedal assembly.**

   (a) Install the accelerator pedal assembly with the 2 nuts.
   Torque: 5.4 N*m (55 kgf*cm, 48 in.*lbf)

   (b) Connect the accelerator pedal connector.

HOOD

ADJUSTMENT

HINT:

- Centering bolts are used to mount the hood hinge and hood lock. The hood and hood lock cannot be adjusted with the centering bolts on. Substitute the centering bolts for standard bolts (w/ washers) when making adjustments.
- A bolt without a torque specification is shown in the standard bolt chart (See page SS-3).

1. INSPECT HOOD SUB-ASSEMBLY

(a) Check that the clearance measurements of areas A to B are within the standard range.

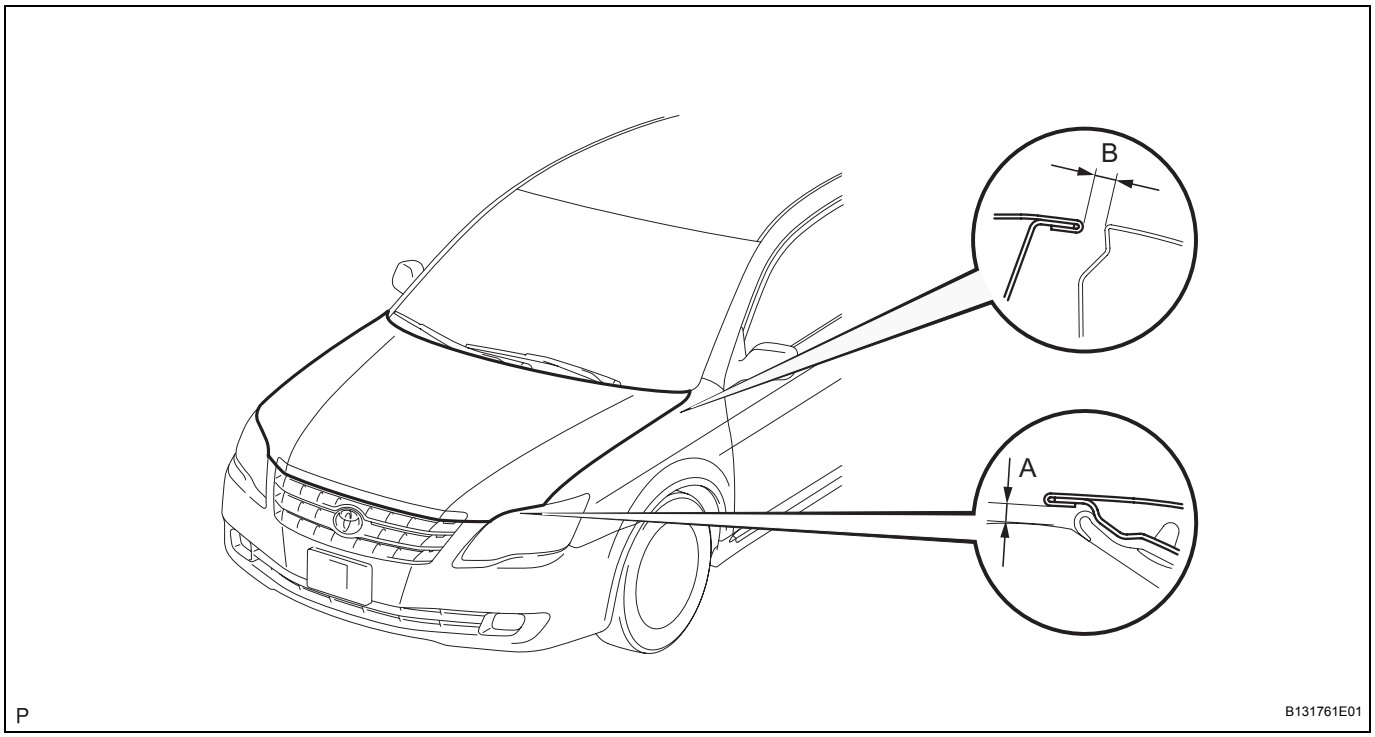

Standard

Area	Measurement	Area	Measurement
A	5.8 +- 1.5 mm (0.228 +- 0.059 in.)	B	3.7 +- 1.5 mm (0.146 +- 0.059 in.)

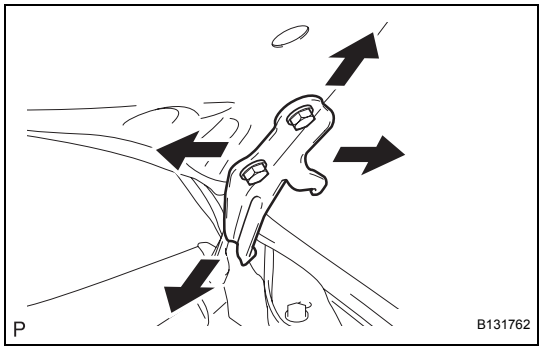

2. ADJUST HOOD SUB-ASSEMBLY

(a) Adjust the hood horizontally and vertically by loosening the hood side's hinge bolts.

(b) Tighten the hood side's hinge bolts after the adjustment.

Torque: 13 N*m (133 kgf*cm, 10 ft.*lbf)

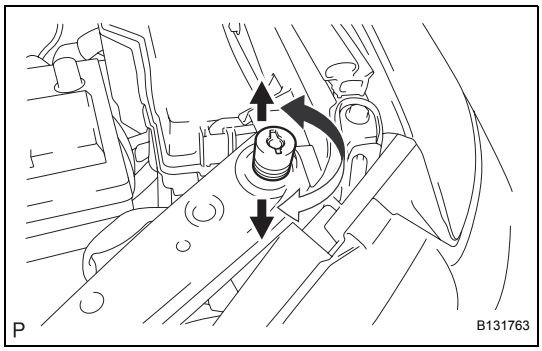

(c) Adjust the cushion rubber so that the height of the hood and the fender are aligned.
  (1) Raise or lower the hood's front end by turning the cushion rubber. Make sure that the clearance is within the standard range.

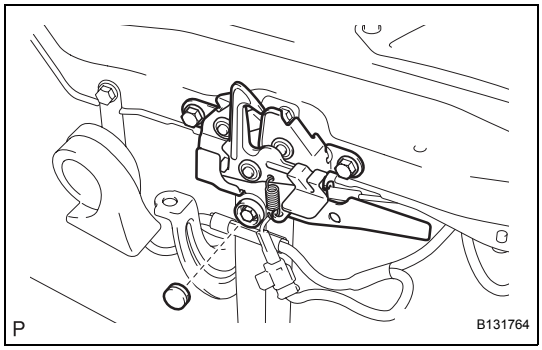

(d) Adjust the hood lock.
  (1) Remove the hood lock nut cap.
  (2) Loosen the 3 bolts.

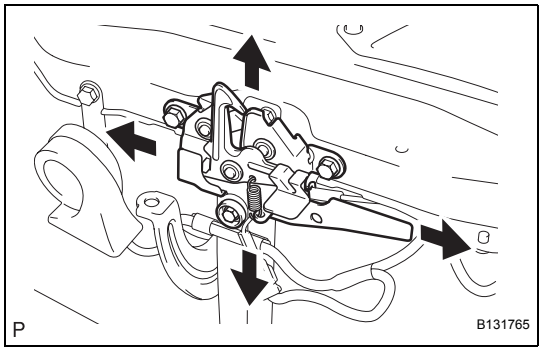

  (3) Adjust the hood lock position so that the striker can enter smoothly.
  (4) Tighten the hood lock bolts after the adjustment.
  Torque: 8.0 N*m (82 kgf*cm, 71 in.*lbf)

HOOD SUPPORT

COMPONENTS

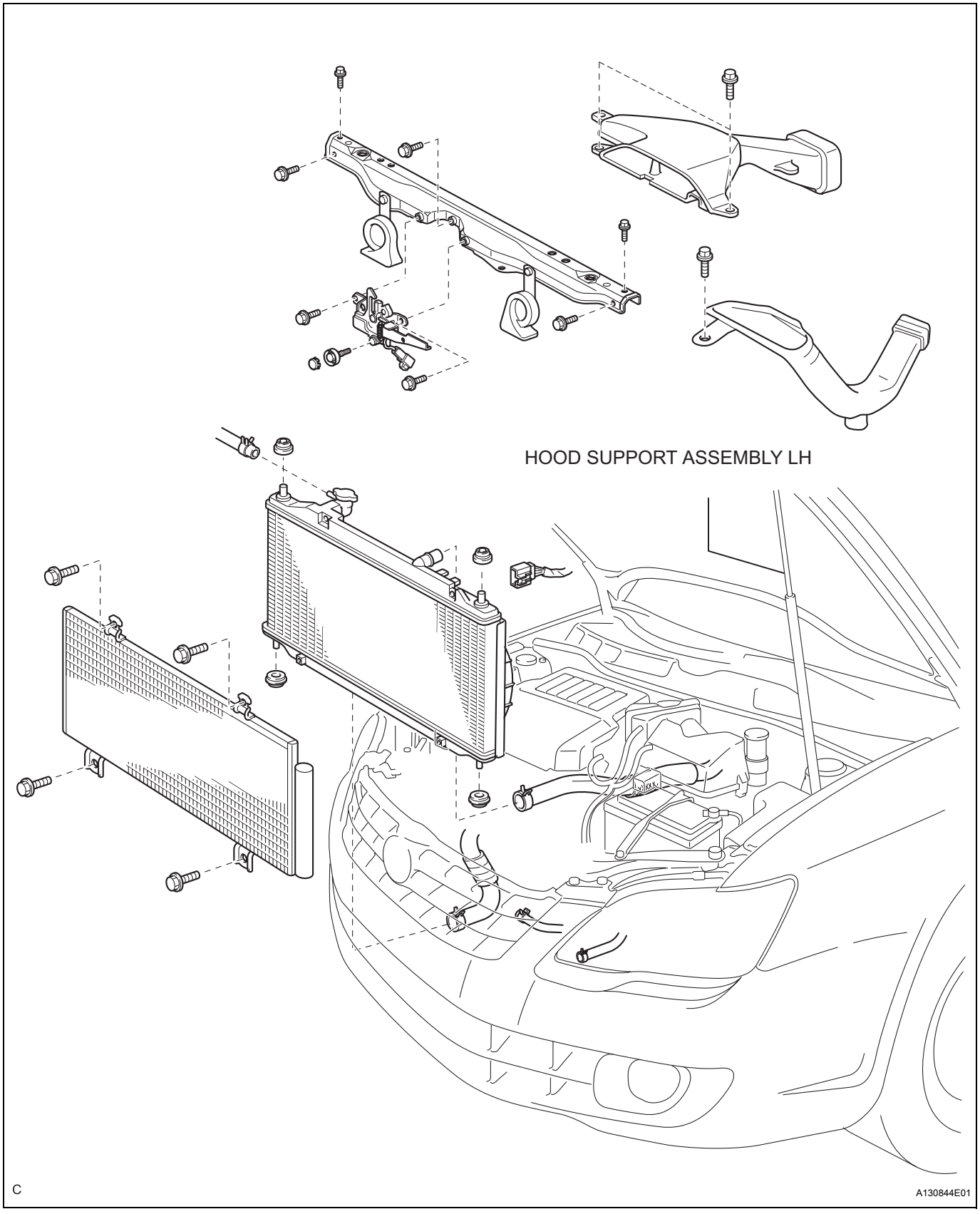

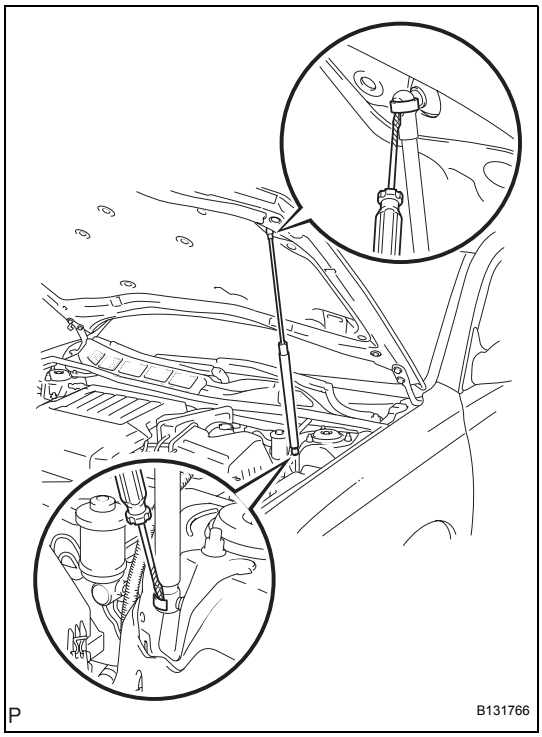

REMOVAL

1. REMOVE HOOD SUPPORT ASSEMBLY LH

(a) Using a screwdriver, remove the clip and hood support from the hood side.
HINT:
- Tape the screwdriver tip before use.
- Remove the hood support while supporting the hood by hands.

(b) Using a screwdriver, remove the clip and hood support from the body side.

INSTALLATION

1. INSTALL HOOD SUPPORT ASSEMBLY LH

(a) Install the 2 clips to the hood support.

(b) Install the hood support.

DISPOSAL

1. DISPOSE OF HOOD SUPPORT ASSEMBLY LH

(a) Horizontally fix the stay in a vise with the piston-rod pulled out.

(b) Wearing safety glasses, slowly cut a part between A and B as shown in the illustration using a metal saw to gradually release the gas.

Specification

Area	Measurement
a	80 mm (3.15 in.)
b	20 mm (0.80 in.)

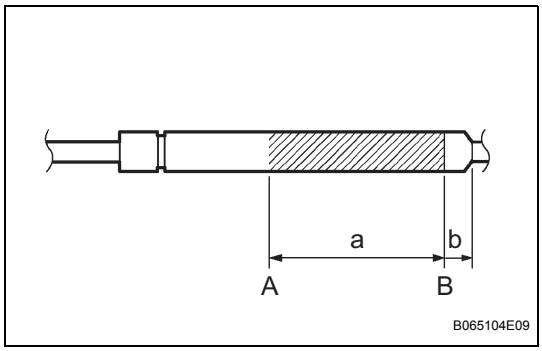

CAUTION:

Be careful to cover the area that is being cut as there is a possibility that metal debris could be blown out by the gas (the gas is colorless, odorless and harness).

FRONT DOOR

COMPONENTS

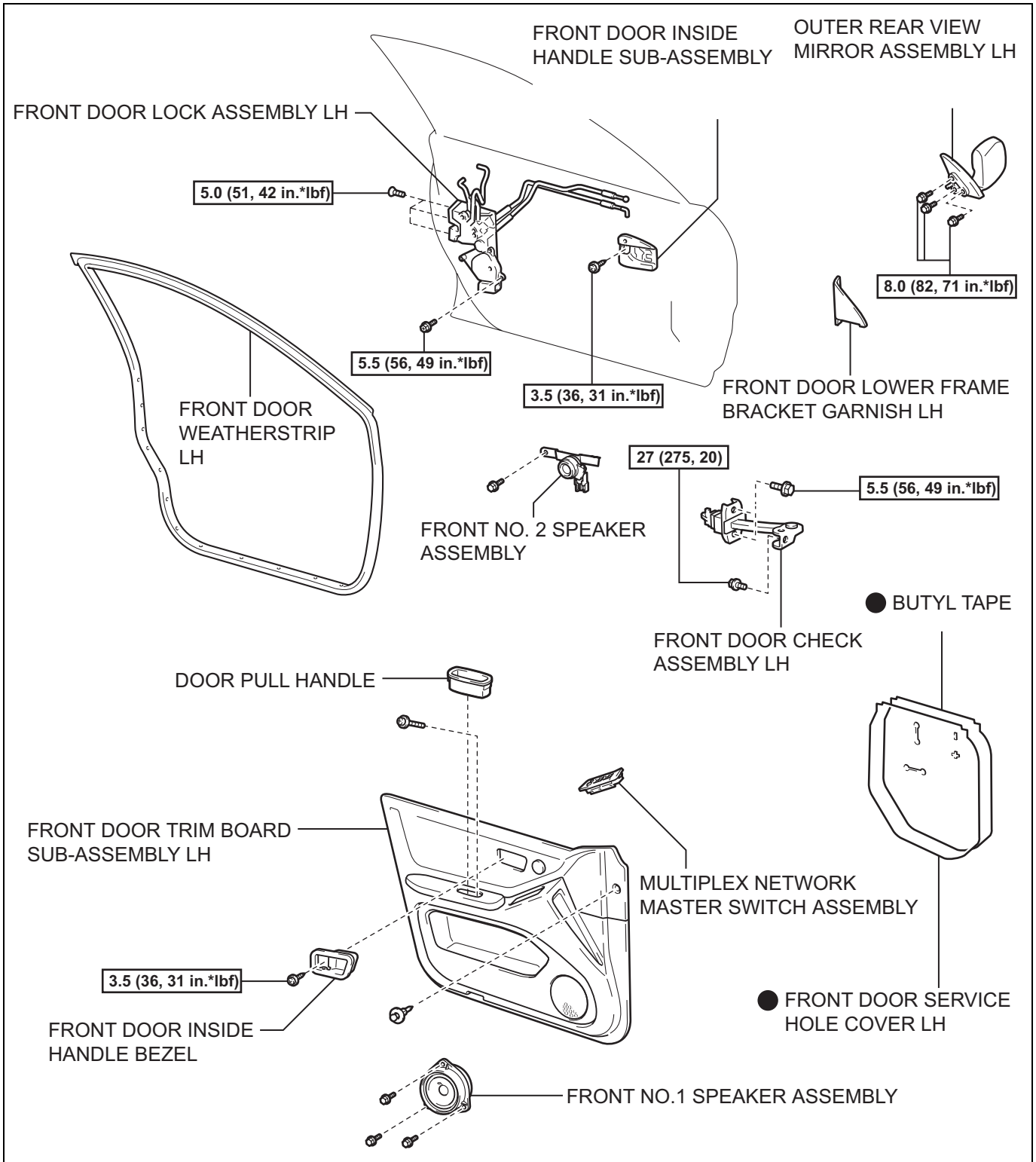

ED

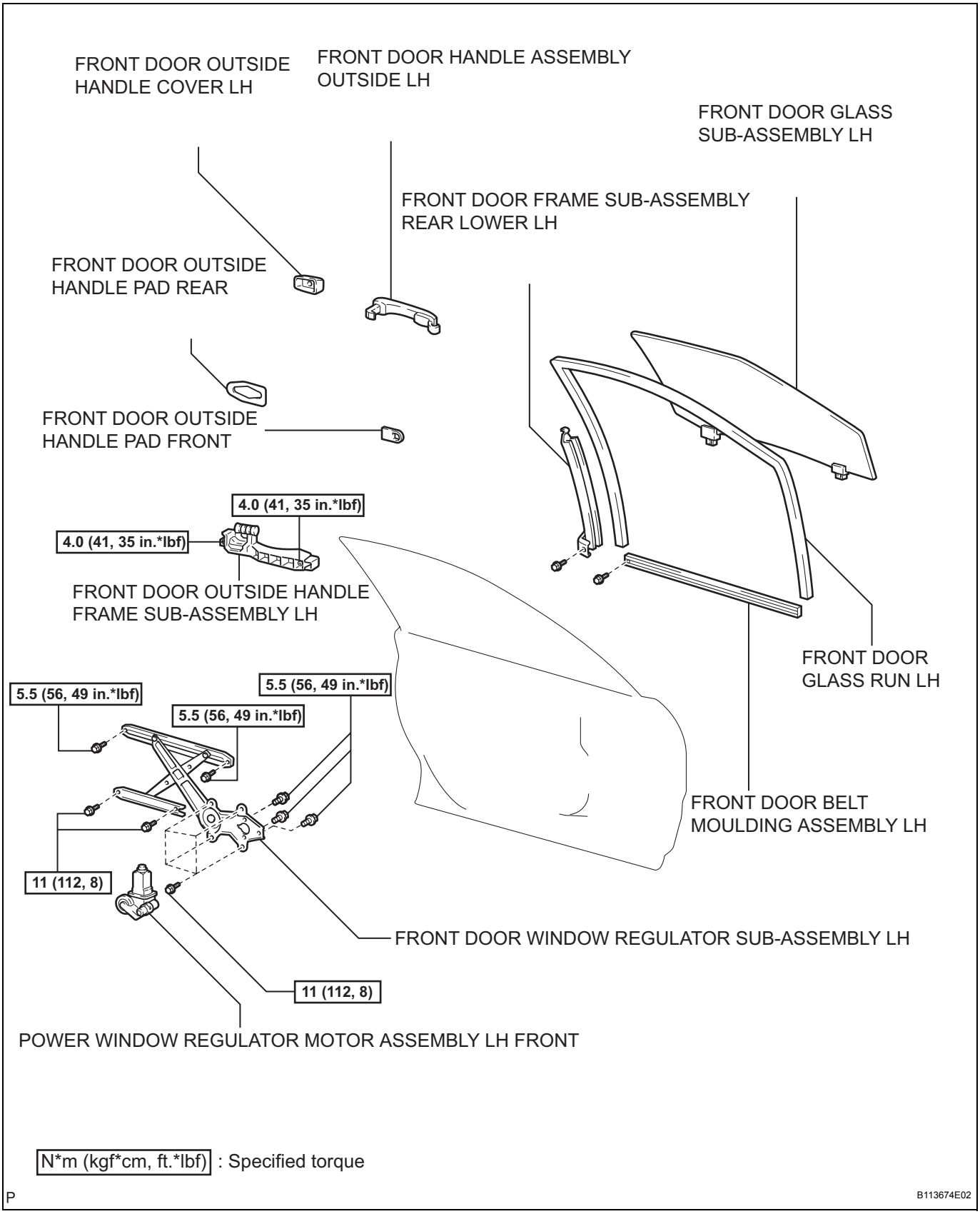

N*m (kgf*cm, ft.*lbf) : Specified torque

P

B113674E02

DISASSEMBLY

HINT:

- The installation procedures are the removal procedures in reverse order. However, only installation procedures requiring additional information are included.
- Use the same procedures for the RH side and LH side.
- The procedures listed below are for the LH side.
- A bolt without a torque specification is shown in the standard bolt chart (See page SS-3).

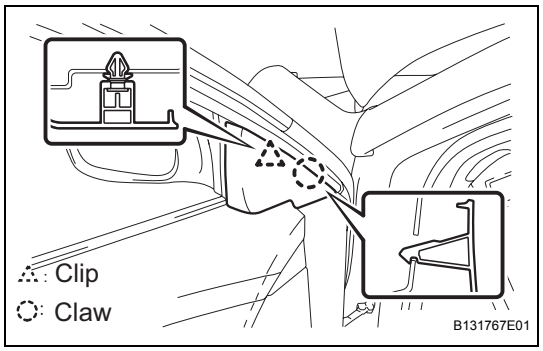

1. REMOVE FRONT DOOR LOWER FRAME BRACKET GARNISH LH

(a) Using a screwdriver, disengage the clip and claw, and remove the front door lower frame bracket garnish LH.
HINT:
Tape the screwdriver tip before use.

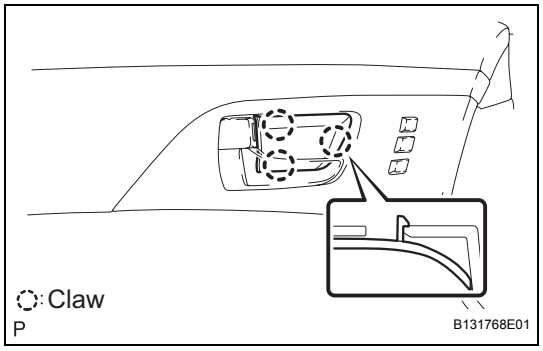

2. REMOVE FRONT DOOR INSIDE HANDLE BEZEL PLUG LH

(a) Using a screwdriver, disengage the 3 claws and remove the front door inside handle bezel plug LH.

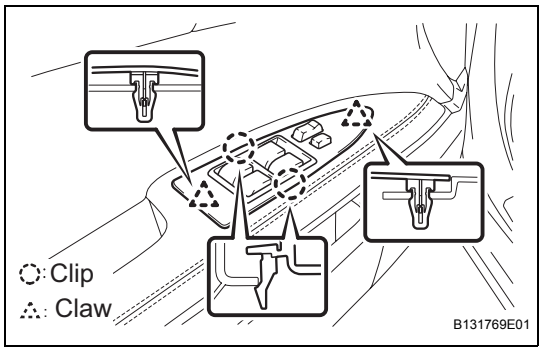

3. REMOVE FRONT ARMREST BASE PANEL UPPER LH

(a) Using a screwdriver, disengage the 2 clips and 2 claws, and remove the armrest base panel upper LH with the power window regulator master switch.
(b) Disconnect the switch connector.

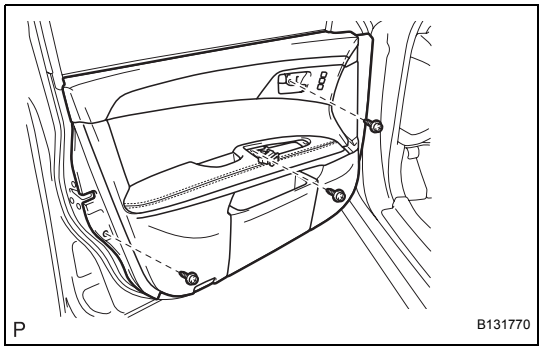

4. REMOVE FRONT DOOR TRIM BOARD SUB-ASSEMBLY LH

(a) Remove the 3 screws.

ED

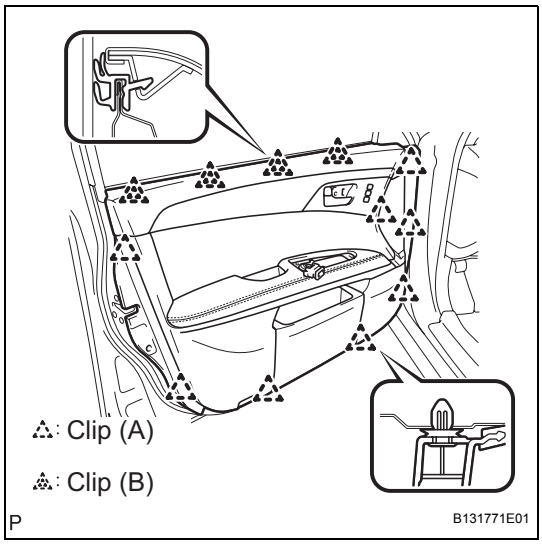

(b) Using a clip remover, disengage the 9 clips (A) and 4 clips (B) on top.
(c) Remove the trim inboard.
HINT:
If a clip cannot be reached with the clip remover, pull on the lower trim to remove it.

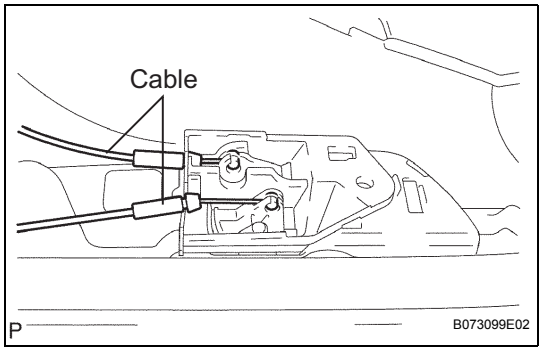

(d) Disconnect the 2 cables.
(e) Disconnect the wire harness connector from the courtesy light.

5. REMOVE OUTER REAR VIEW MIRROR ASSEMBLY LH

(a) Remove the outer rear view mirror assembly LH (See page MI-37).

6. REMOVE OUTER MIRROR CONTROL ECU ASSEMBLY

(a) Disconnect the connectors.

(b) Remove the 2 screws and the outer mirror control ECU assembly.

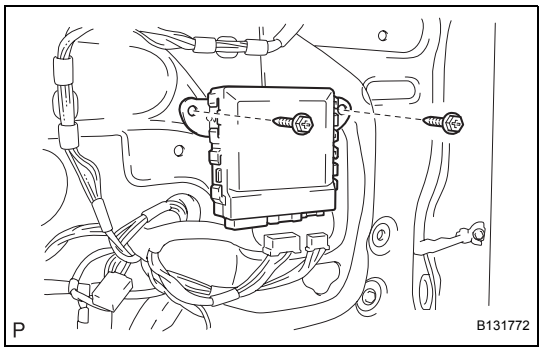

7. REMOVE FRONT NO.1 SPEAKER ASSEMBLY

(a) Remove the front No. 1 speaker assembly (See page AV-170).

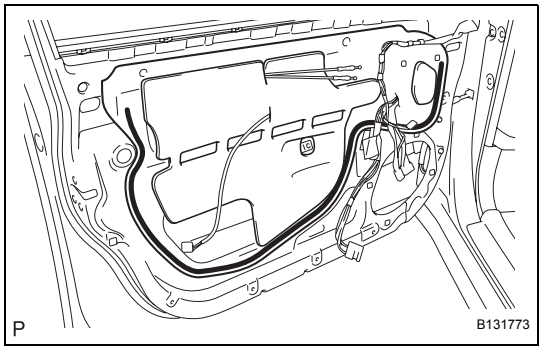

8. REMOVE FRONT DOOR SERVICE HOLE COVER LH

(a) Remove the front door service hole cover LH.
NOTICE:
Remove the remaining tape on the door side.

9. REMOVE FRONT DOOR BELT MOULDING ASSEMBLY LH

10. REMOVE FRONT DOOR WINDOW FRAME MOULDING REAR LH

11. REMOVE FRONT DOOR MOULDING SUB-ASSEMBLY OUTSIDE LH

12. REMOVE FRONT DOOR GLASS WEATHERSTRIP INNER LH

ED

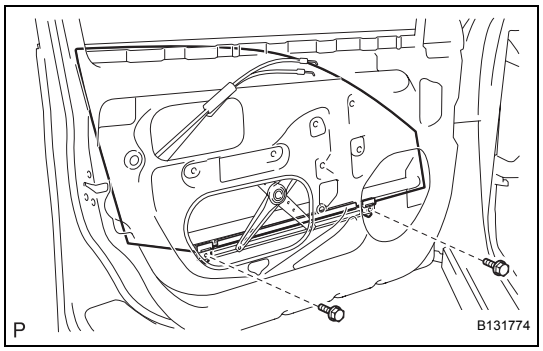

13. REMOVE FRONT DOOR GLASS SUB-ASSEMBLY LH

(a) Remove the 2 bolts and the front door glass sub-assembly LH.

NOTICE:

Be careful not to damage the glass.

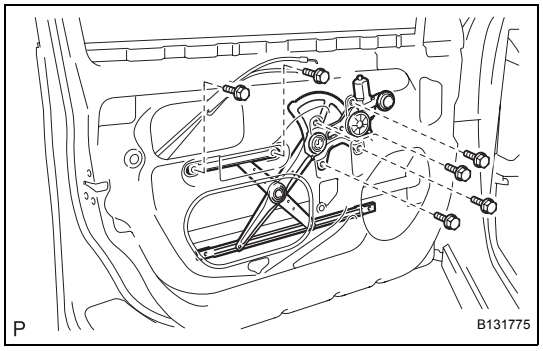

14. REMOVE FRONT DOOR WINDOW REGULATOR SUB-ASSEMBLY LH

(a) Remove the 6 bolts and the front door window regulator sub-assembly LH.

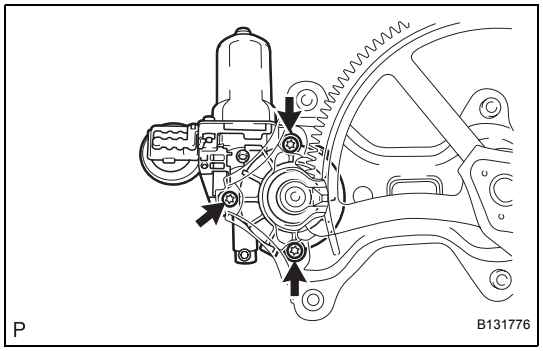

15. REMOVE POWER WINDOW REGULATOR MOTOR ASSEMBLY LH FRONT

(a) Using a torx wrench (T25), remove the 3 torx screws and the power window regulator motor assembly LH front.

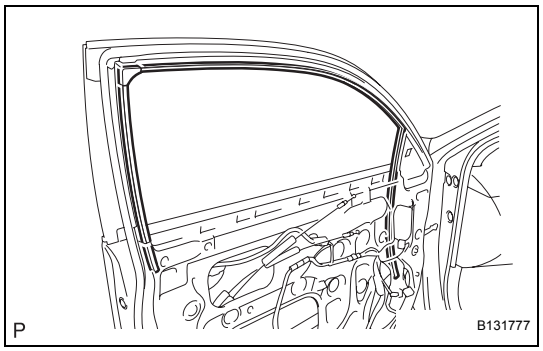

16. REMOVE FRONT DOOR GLASS RUN LH

(a) Remove the front door glass run LH.

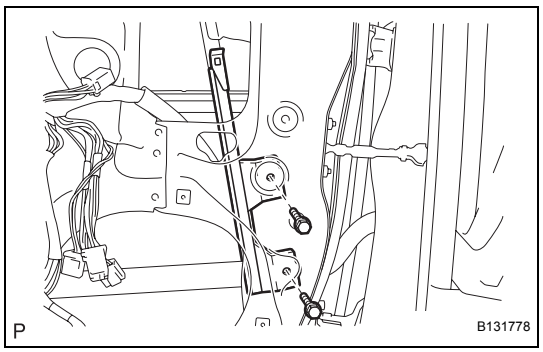

17. REMOVE FRONT DOOR FRAME SUB-ASSEMBLY FRONT LOWER LH

(a) Remove the 2 bolts and the front door frame sub-assembly front lower LH.

HINT:

Remove the frame through the speaker hole.

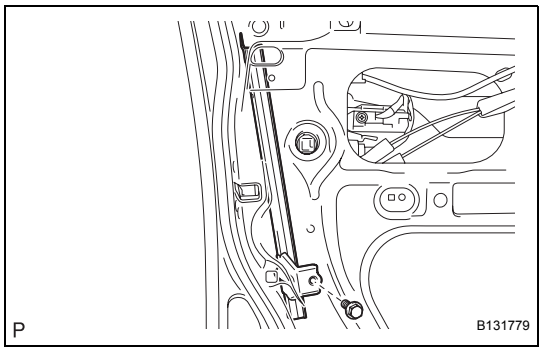

18. REMOVE FRONT DOOR FRAME SUB-ASSEMBLY REAR LOWER LH

(a) Remove the bolt and the front door frame sub-assembly rear lower LH.

19. REMOVE FRONT DOOR LOCK ASSEMBLY LH

(a) Disconnect the door lock connector.

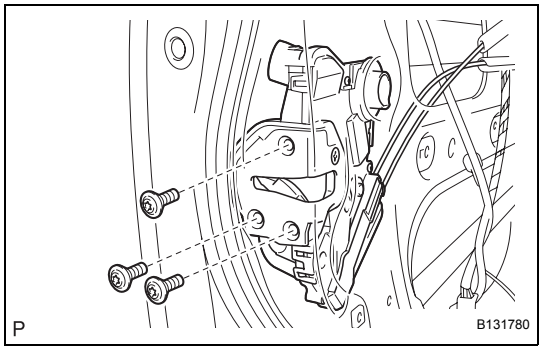

(b) Using a torx socket wrench (T30), remove the 3 torx screws and the front door lock assembly LH.
HINT:
Remove the door lock through the service hole.
NOTICE:
Be careful when removing the bolts as the door lock may fall and be damaged.

(c) Remove the front door lock wire harness packing.

20. REMOVE FRONT DOOR OUTSIDE HANDLE COVER RH

(a) Remove the hole plug.

(b) Using a torx socket wrench (T30), loosen the torx screw and remove the front door outside handle cover LH with the door lock key cylinder installed.

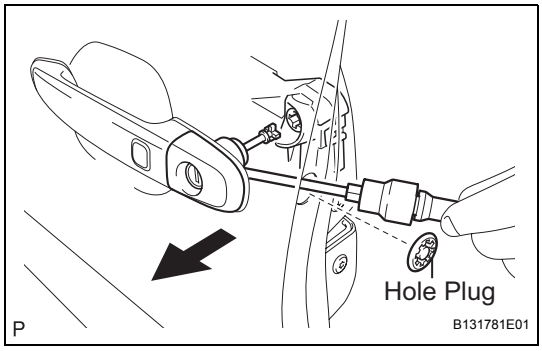

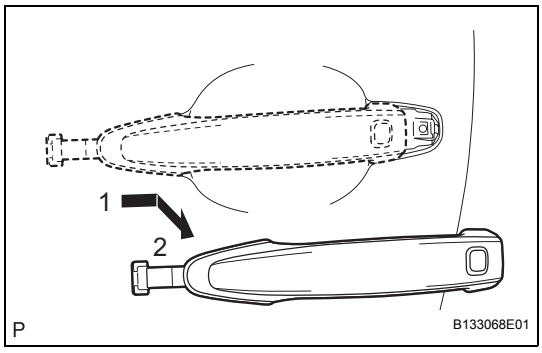

21. REMOVE FRONT DOOR HANDLE ASSEMBLY OUTSIDE LH

(a) Remove the handle by sliding and pulling it in the direction indicated by the arrow in the illustration.

(b) Remove the outside handle pad front and rear.
NOTICE:
If the bellcrank lever is not pulled and held when removing the handle, the release plate will interfere with the handle and be damaged.

ED

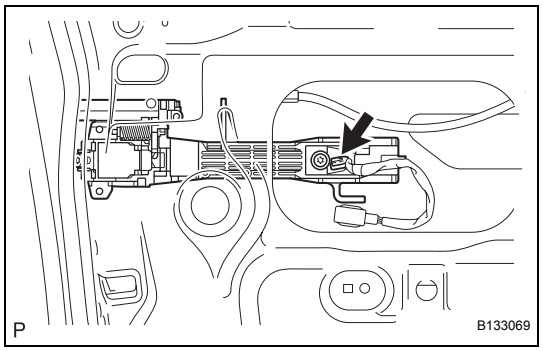

22. REMOVE FRONT DOOR OUTSIDE HANDLE FRAME SUB-ASSEMBLY LH (w/o Smart Key System)

(a) Using a torx socket wrench (T30), loosen the torx screw and remove the front door outside handle frame sub-assembly LH.

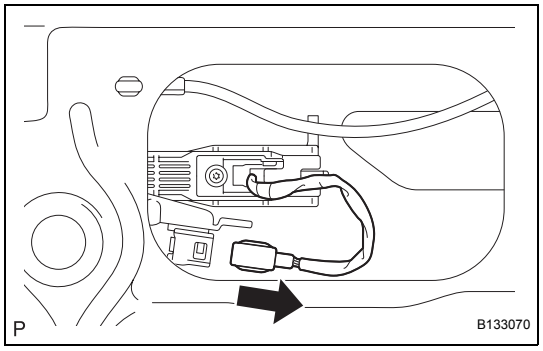

23. REMOVE FRONT DOOR OUTSIDE HANDLE FRAME SUB-ASSEMBLY LH (w/ Smart Key System)

(a) Disconnect the connector.

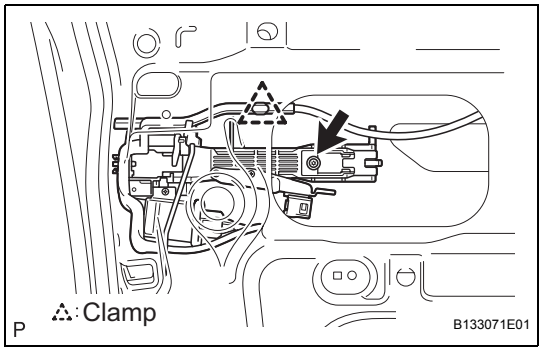

(b) Disconnect the clamp.

(c) Using a torx socket wrench, loosen the torx screw and remove the front door outside handle frame sub-assembly LH.

24. REMOVE FRONT DOOR OUTSIDE HANDLE PAD FRONT

25. REMOVE FRONT DOOR OUTSIDE HANDLE PAD REAR

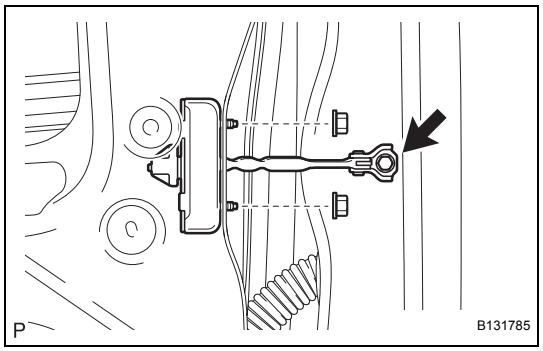

26. REMOVE FRONT DOOR CHECK ASSEMBLY LH

(a) Remove the bolt, 2 nuts and the front door check assembly LH.

HINT:

Remove the door check through the service hole.

NOTICE:

Be careful when removing the bolts as door check may fall and be damaged.

27. REMOVE FRONT DOOR WEATHERSTRIP LH

ADJUSTMENT

HINT:

- Before adjusting the door position for vehicles equipped with side airbags and curtain shield airbags, be sure to disconnect the negative (-) terminal cable from the battery. After adjustment, inspect the SRS warning light, the side airbag system and the curtain shield airbag system for normal operation (See page RS-28). Then initialize both systems (See page IN-29).
- Use the same procedure for the RH side and LH side.
- The procedures listed below are for the LH side.
- Centering bolts are used to mount the door hinge to the vehicle body and door. The door cannot be adjusted with the centering bolts on. Substitute the centering bolts for standard bolts (w/ washers) when making adjustments.
- A bolt without a torque specification is shown in the standard bolt chart (See page SS-3).

1. INSPECT FRONT DOOR PANEL SUB-ASSEMBLY LH

(a) Check that the clearance measurements of areas A to D are within the standard range.

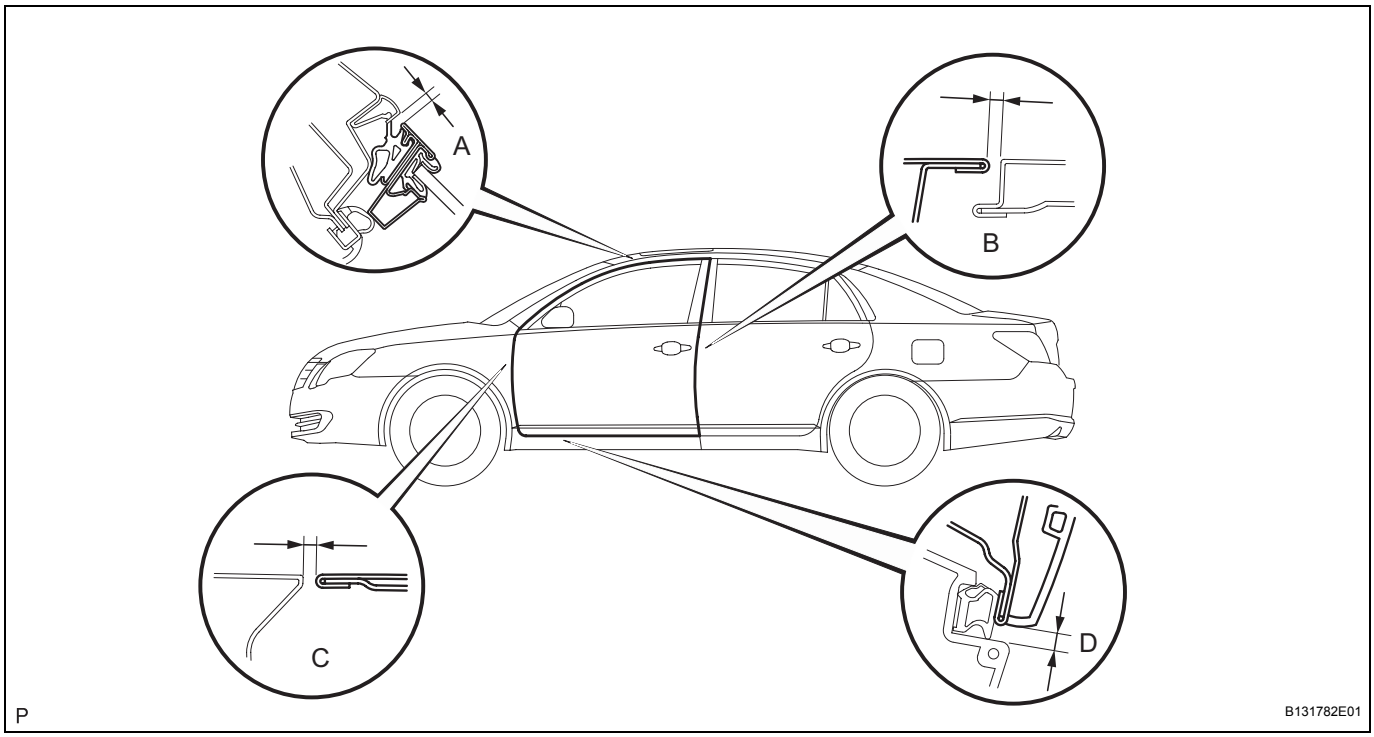

Standard

Area	Measurement	Area	Measurement
A	5.0 +- 1.5 mm (0.197 +- 0.059 in.)	B	4.2 +- 1.5 mm (0.165 +- 0.059 in.)
C	4.2 +- 1.5 mm (0.165 +- 0.059 in.)	D	5.4 +- 1.5 mm (0.213 +- 0.059 in.)

ED

2. ADJUST FRONT DOOR PANEL SUB-ASSEMBLY LH

(a) Disconnect the negative (-) terminal cable from the battery.
CAUTION:
Work must be started at least 90 seconds after the ignition switch is turned to the LOCK position and the negative (-) terminal cable is disconnected from the battery. (The SRS is equipped with a back-up power source. If work is started within 90 seconds after disconnecting the negative (-) terminal battery and turning the ignition switch to the LOCK position, the SRS might be deployed.)

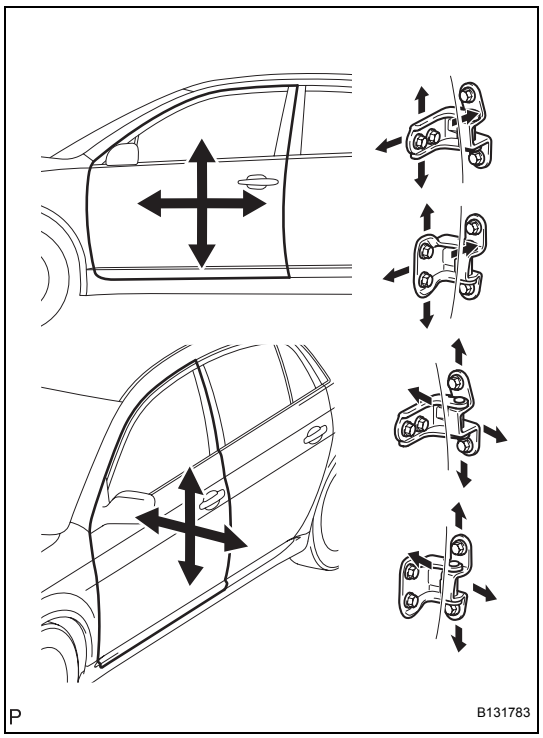

(b) Using SST, adjust the door horizontally and vertically by loosening the body side's hinge bolts.
SST 09812-00010

(c) Tighten the body side's hinge bolts after the adjustment.
Torque: 26 N*m (265 kgf*cm, 19 ft.*lbf)

(d) Horizontally and vertically adjust the door by loosening the door side's hinge bolts.

(e) Tighten the door side's hinge bolts after the adjustment.
Torque: 26 N*m (265 kgf*cm, 19 ft.*lbf)

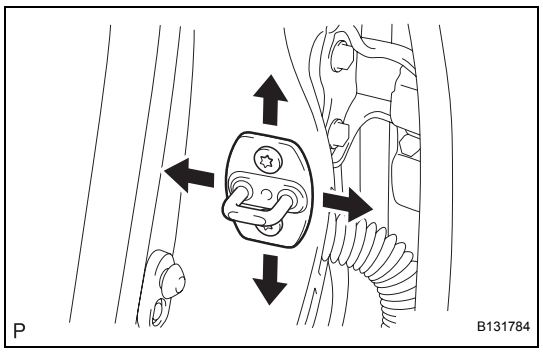

(f) Adjust the striker position by slightly loosening the striker mounting screws and hitting the striker with a plastic hammer.

(g) Tighten the striker mounting screws after the adjustment.
Torque: 23 N*m (235 kgf*cm, 17 ft.*lbf)

(h) Connect the negative (-) terminal cable from the battery.

(i) Initialize systems (See page IN-29).

(j) Check the SRS warning light (See page RS-28).

ED

REASSEMBLY

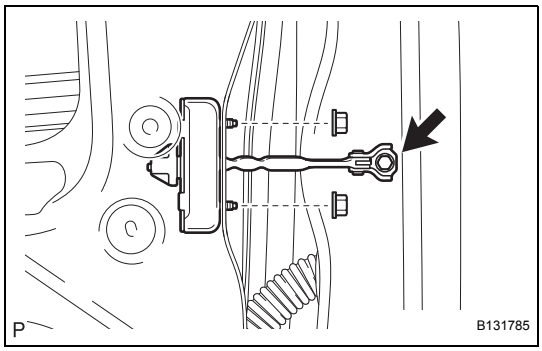

1. INSTALL FRONT DOOR CHECK ASSEMBLY LH

(a) Apply MP grease to the sliding areas of the door check.

(b) Install the door check to the door panel with the 2 nuts.
Torque: 8.0 N*m (82 kgf*cm, 71 in.*lbf)

(c) Apply adhesive to the threads of the bolt.
Adhesive:
Part No. 08833-00070, THREE BOND 1324 or equivalent

(d) Install the door check to the body panel with the bolt.
Torque: 26 N*m (265 kgf*cm, 19 ft.*lbf)

2. INSTALL FRONT DOOR OUTSIDE HANDLE FRAME SUB-ASSEMBLY LH (w/o Smart Key System)

(a) Using a torx wrench (T25), install the front door outside handle frame sub-assembly LH with the torx screw.
Torque: 7.0 N*m (71 kgf*cm, 62 in.*lbf)

3. INSTALL FRONT DOOR OUTSIDE HANDLE FRAME SUB-ASSEMBLY LH (w/ Smart Key System)

(a) Using a torx wrench (T25), install the front door outside handle frame sub-assembly LH with the torx screw.
Torque: 7.0 N*m (71 kgf*cm, 62 in.*lbf)

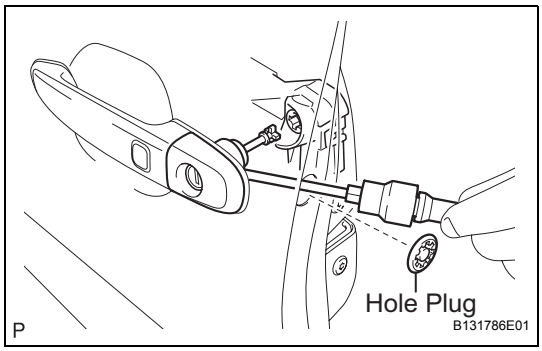

4. INSTALL FRONT DOOR OUTSIDE HANDLE COVER LH

(a) Using a torx socket wrench (T30), install the cover (with the door lock key cylinder installed) with the torx screw.
Torque: 4.0 N*m (41 kgf*cm, 37 in.*lbf)

(b) Install the hole plug.

5. INSTALL FRONT DOOR W/MOTOR LOCK ASSY LH

(a) Apply MP grease to the sliding and rotating areas of the door lock.

(b) Install a new door lock wire harness packing.
NOTICE:
- **When reinstalling a door lock, always use new packing.**
- **Do not allow grease or dirt to contaminate the gap between the door panel and packing.**
- **Water will damage the door lock.**
- **Old packing or damaged packing cannot effectively protect the door lock against water.**

ED

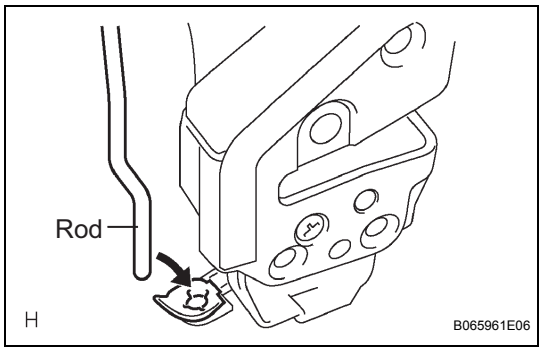

(c) Insert the control rod into the door lock, and then set it to the door panel.
NOTICE:
Make sure that the rod is securely engaged with the lock.
(d) Apply adhesive to the threads of the 3 torx screws.
Adhesive:
Part No. 08833-00070, THREE BOND 1324 or equivalent

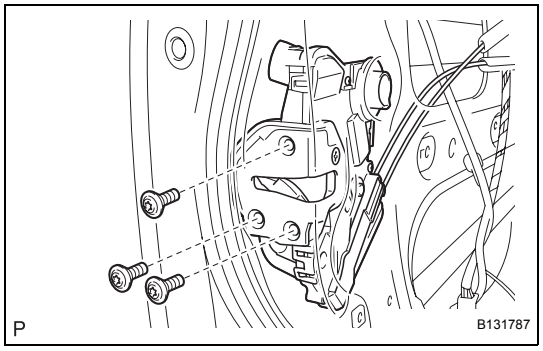

(e) Using a torx socket wrench (T30), install the door lock with the 3 torx screws.
Torque: 5.0 N*m (51 kgf*cm, 44 in.*lbf)
(f) Connect the door lock connector.

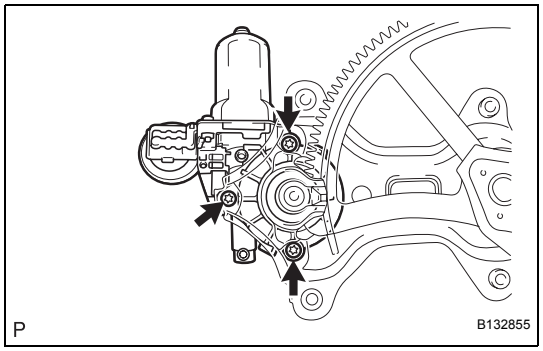

6. INSTALL POWER WINDOW REGULATOR MOTOR ASSEMBLY LH FRONT
(a) Using a torx wrench (T25), install the power window regulator motor assembly LH front with the 3 torx screws.
Torque: 5.5 N*m (56 kgf*cm, 49 in.*lbf)

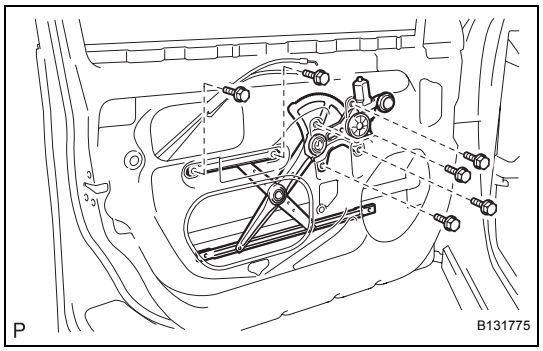

7. INSTALL FRONT DOOR WINDOW REGULATOR SUB-ASSEMBLY LH
(a) Install the front door window regulator sub-assembly LH with the 6 bolts.
Torque: 8.0 N*m (82 kgf*cm, 71 in.*lbf)

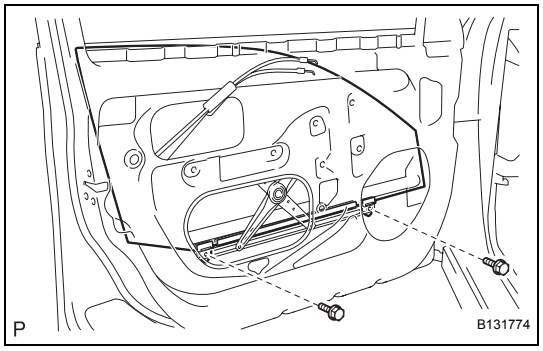

8. INSTALL FRONT DOOR GLASS SUB-ASSEMBLY LH
(a) Install the front door glass sub-assembly LH with the 2 bolts.
Torque: 5.5 N*m (56 kgf*cm, 49 in.*lbf)

9. INSTALL FRONT DOOR SERVICE HOLE COVER LH
(a) Apply butyl tape to the door.

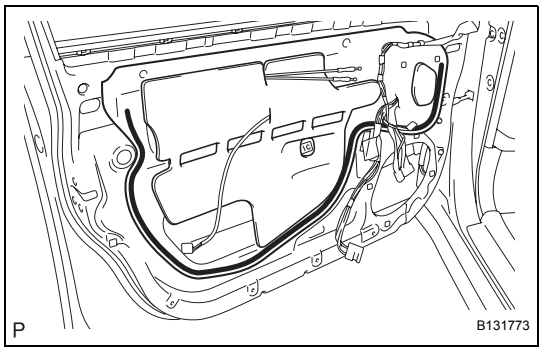

(b) Install the front door service hole cover LH, as shown in the illustration.
HINT:
- There should be no wrinkles or folds on the service hole cover after attaching.
- Check that the service hole cover is securely attached.

10. INSTALL OUTER REAR VIEW MIRROR ASSEMBLY LH

(a) Install the outer rear view mirror assembly LH (See page MI-39).

11. INITIALIZE POWER WINDOW SYSTEM CIRCUIT

(a) Initialize the power window system circuit (See page IN-29).

REAR DOOR

COMPONENTS

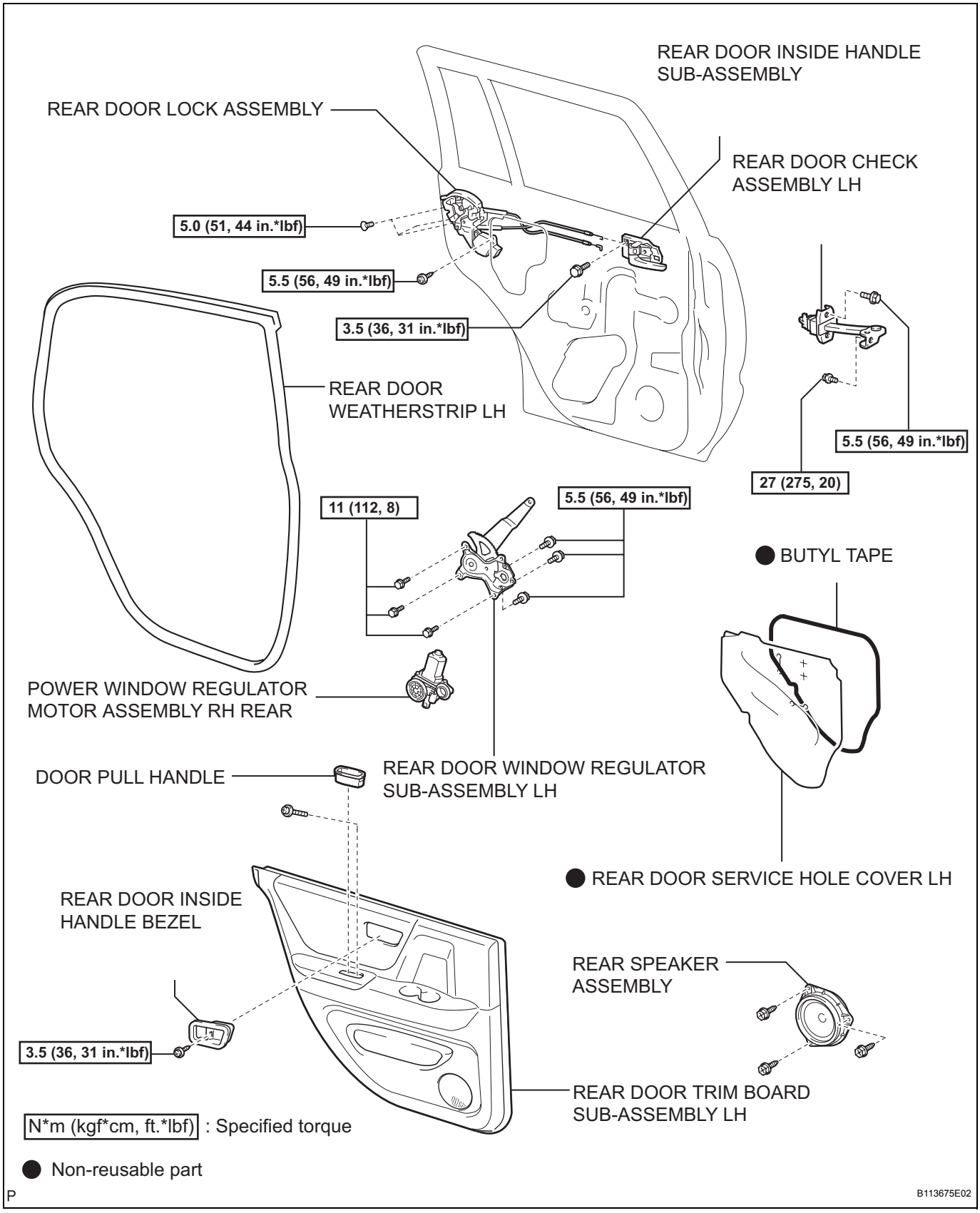

ED

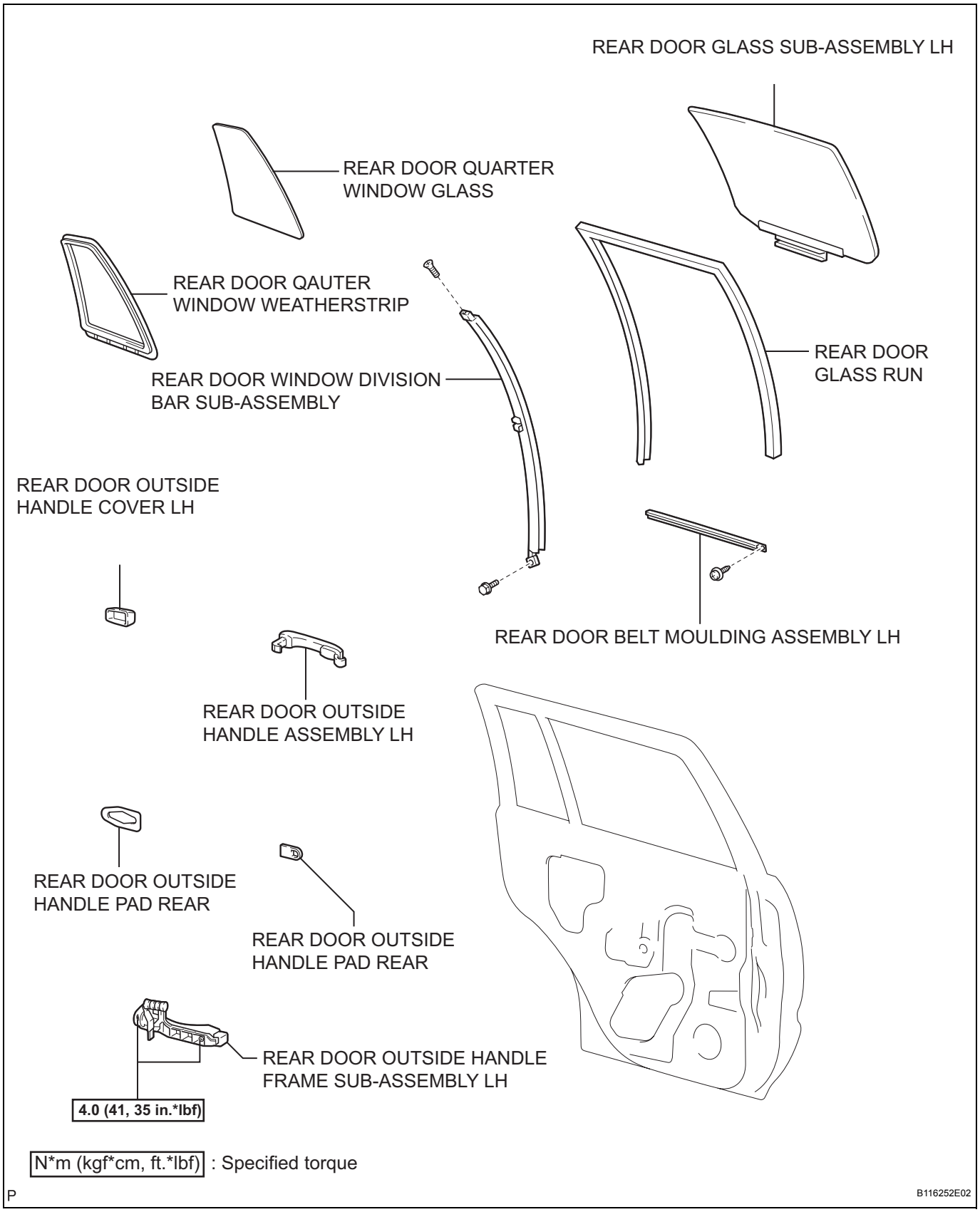
REAR DOOR GLASS SUB-ASSEMBLY LH
REAR DOOR QUARTER WINDOW GLASS
REAR DOOR QAUTER WINDOW WEATHERSTRIP
REAR DOOR WINDOW DIVISION BAR SUB-ASSEMBLY
REAR DOOR GLASS RUN
REAR DOOR OUTSIDE HANDLE COVER LH
REAR DOOR BELT MOULDING ASSEMBLY LH
REAR DOOR OUTSIDE HANDLE ASSEMBLY LH
REAR DOOR OUTSIDE HANDLE PAD REAR
REAR DOOR OUTSIDE HANDLE PAD REAR
REAR DOOR OUTSIDE HANDLE FRAME SUB-ASSEMBLY LH
4.0 (41, 35 in.*lbf)
N*m (kgf*cm, ft.*lbf) : Specified torque
P
B116252E02

ED

DISASSEMBLY

HINT:

- The installation procedures are the removal procedures in reverse order. However, only installation procedures requiring additional information are included.
- Use the same procedures for the RH side and LH side.
- The procedures listed below are for the LH side.
- A bolt without a torque specification is shown in the standard bolt chart (See page SS-3).

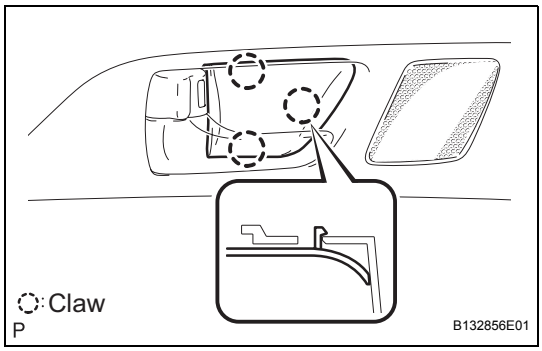

1. REMOVE REAR DOOR INSIDE HANDLE BEZEL PLUG LH

(a) Using a screwdriver, disengage the 3 claws and remove the rear door inside handle bezel plug LH.
HINT:
Tape the screwdriver tip before use.

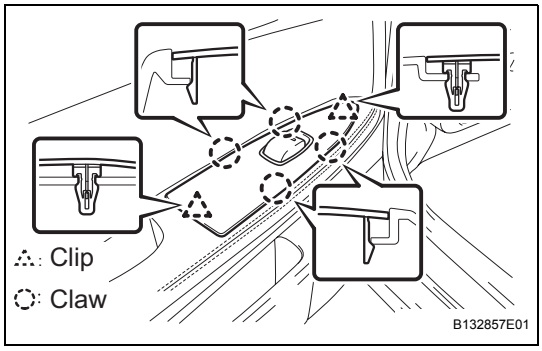

2. REMOVE REAR DOOR ARMREST BASE PANEL UPPER LH

(a) Using a screwdriver, disengage the 2 clips and 4 claws, and remove the armrest base panel upper LH with the power window regulator master switch.
(b) Disconnect the switch connector.

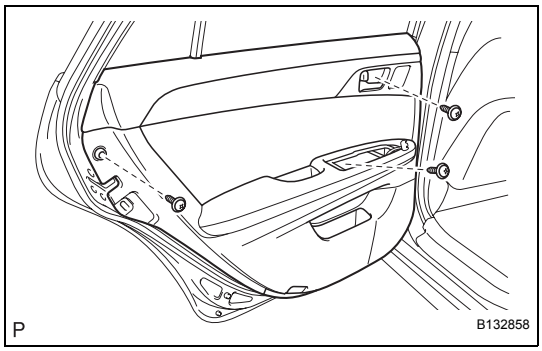

3. REMOVE REAR DOOR TRIM BOARD SUB-ASSEMBLY LH

(a) Remove the 3 screws.

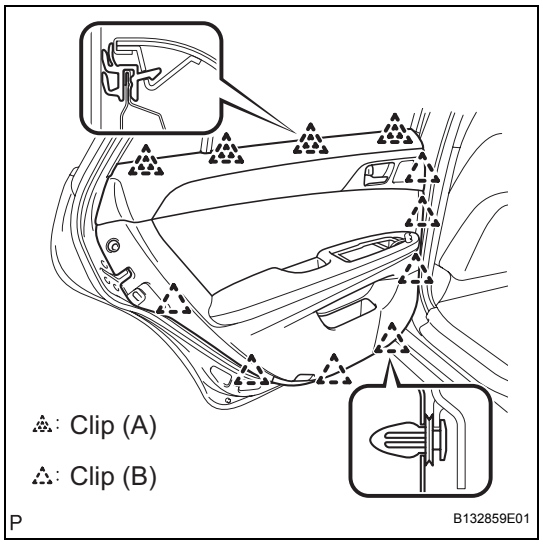

(b) Using a clip remover, disengage the 7 clips (A) and 4 clips (B) on top.
(c) Remove the trim inboard.
HINT:
If a clip cannot be reached with the clip remover, pull on the lower trim to remove it.

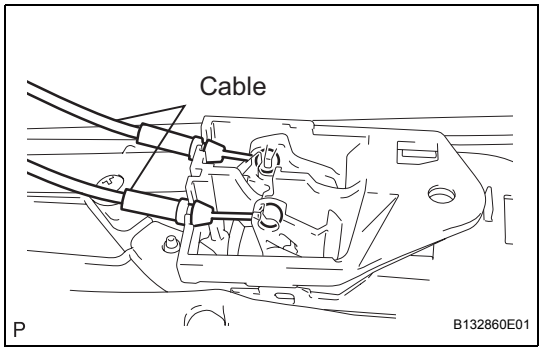

(d) Disconnect the 2 cables.
(e) Disconnect the wire harness connector from the courtesy lamp.

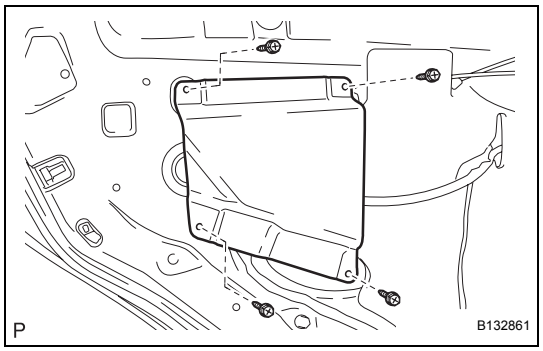

(f) Remove the 4 screws and the rear door inside panel bracket No. 1 LH.

4. REMOVE REAR SPEAKER ASSEMBLY NO.2

(a) Remove the rear speaker assembly No. 2 (See page AV-188).

5. REMOVE REAR SPEAKER ASSEMBLY

(a) Remove the rear speaker assembly (See page AV-183).

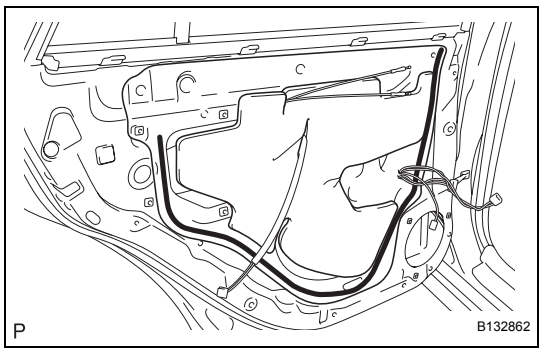

6. REMOVE REAR DOOR SERVICE HOLE COVER LH

(a) Remove the rear door service hole cover LH.
NOTICE:
Remove the remaining tape on the door side.

7. REMOVE REAR DOOR BELT MOULDING ASSEMBLY LH

8. REMOVE REAR DOOR WINDOW FRAME MOULDING FRONT LH

9. REMOVE REAR DOOR MOULDING SUB-ASSEMBLY OUTSIDE LH

10. REMOVE REAR DOOR GLASS WEATHERSTRIP INNER LH

11. REMOVE POWER DOOR WINDOW DIVISION BAR SUB-ASSEMBLY LH

(a) Remove the screw, 2 bolts and the rear door window division bar sub-assembly LH.

12. REMOVE REAR DOOR WINDOW GLASS LH

(a) Remove the rear door window glass LH as shown in the illustration.

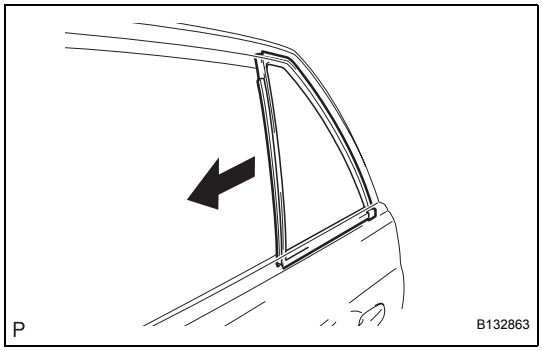

13. REMOVE REAR DOOR GLASS SUB-ASSEMBLY LH

(a) Separate the arm of the rear door window regulator from the rail of the rear door glass.

(b) Remove the rear door glass sub-assembly LH
NOTICE:
Be careful not to damage the glass.

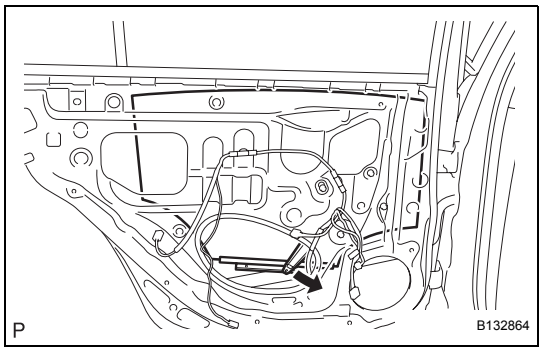

14. REMOVE REAR DOOR WINDOW REGULATOR SUB-ASSEMBLY LH

(a) remove the 4 bolts and the rear door window regulator sub-assembly LH.

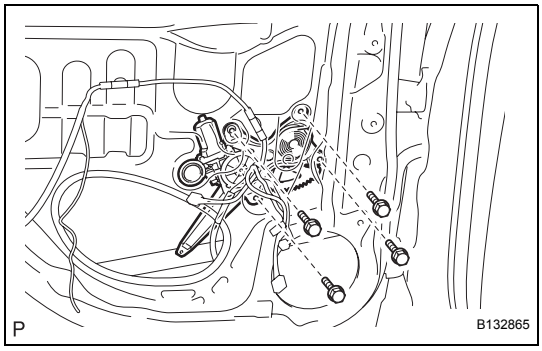

ED

15. REMOVE POWER WINDOW REGULATOR MOTOR ASSEMBLY RH REAR

(a) Using a torx wrench (T25), remove the 3 torx screws and the power window regulator motor assembly RH rear.

16. REMOVE REAR DOOR WINDOW RUN LH

17. REMOVE REAR DOOR WITH MOTOR ASSEMBLY LH

(a) Disconnect the door lock connector.

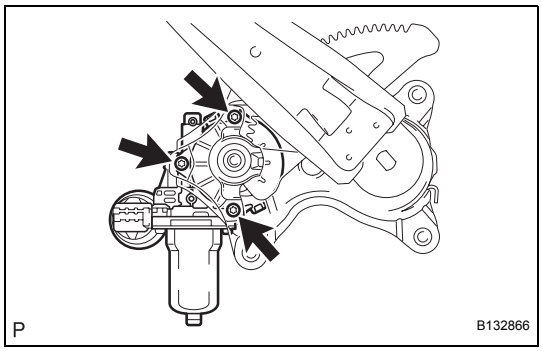

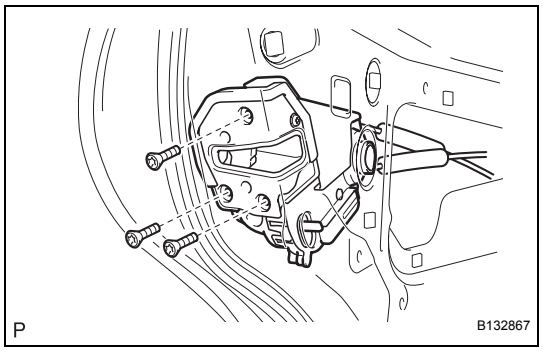

(b) Using a torx socket wrench (T30), remove the 3 torx screws and rear door w/ motor lock assembly LH.
HINT:
Remove the door lock through the service hole.
NOTICE:
Be careful when removing the bolts as the door lock may fall and be damaged.

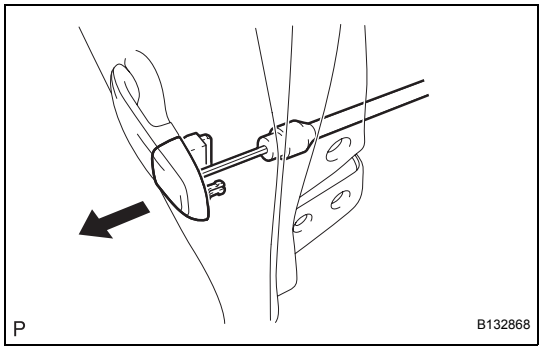

18. REMOVE REAR DOOR OUTSIDE HANDLE COVER LH

(a) Using a torx socket wrench (T30), loosen the torx screw and remove the cover with the door lock key cylinder installed.

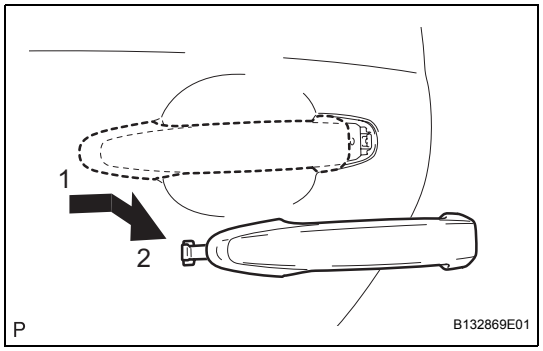

19. REMOVE REAR DOOR OUTSIDE HANDLE ASSEMBLY LH

(a) Remove the handle by sliding and pulling it in the direction indicated by the arrow in the illustration.
(b) Remove the outside handle pad front and rear.
NOTICE:
If the bellcrank lever is not pulled and held when removing the handle, the release plate will interfere with the handle and be damaged.

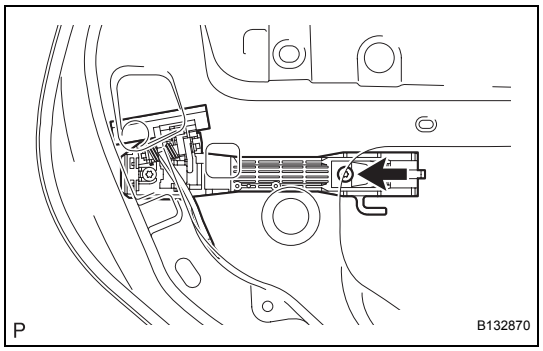

20. REMOVE REAR DOOR OUTSIDE HANDLE FRAME SUB-ASSEMBLY LH

(a) Using a torx socket wrench (T30), loosen the torx screw and remove the rear door outside handle frame sub-assembly LH.

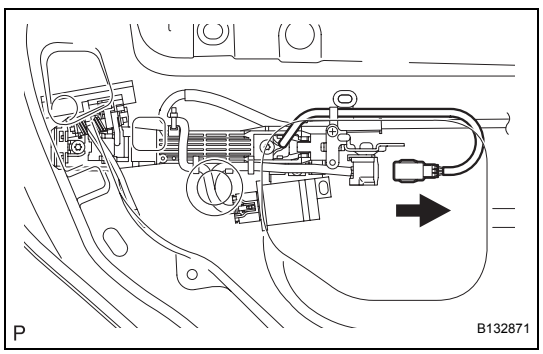

21. REMOVE REAR DOOR OUTSIDE HANDLE FRAME SUB-ASSEMBLY LH

(a) Disconnect the connectors.
(b) Disconnect the clamp.

ED

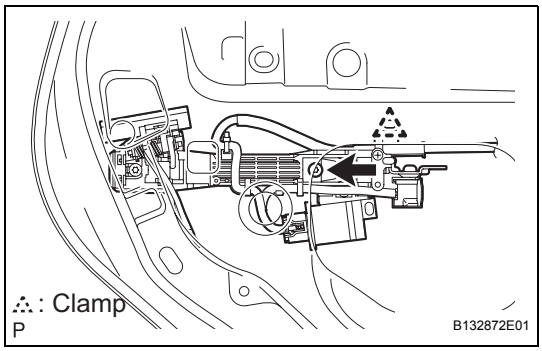

(c) Using a torx socket wrench, loosen the torx screw and remove the rear door outside handle frame sub-assembly LH.

22. REMOVE REAR DOOR OUTSIDE HANDLE PAD FRONT

23. REMOVE REAR DOOR OUTSIDE HANDLE PAD REAR

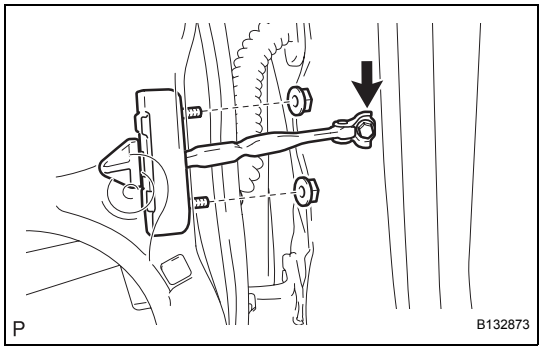

24. REMOVE REAR DOOR CHECK ASSEMBLY LH

(a) Remove the bolt, 2 nuts and the rear door check assembly LH.
HINT:
Remove the door check through the service hole.
NOTICE:
Be careful when removing the bolts as door check may fall and be damaged.

25. REMOVE REAR DOOR WEATHERSTRIP LH

ADJUSTMENT

HINT:

- Before adjusting the door position for vehicles equipped with side airbags and curtain shield airbags, be sure to disconnect the negative (-) terminal cable from the battery. After adjustment, inspect the SRS warning light, the side airbag system and the curtain shield airbag system for normal operation (See page RS-28). Then initialize both systems (See page IN-29).
- Use the same procedure for the RH side and LH side.
- The Procedures listed below are for the LH side.
- Centering bolts are used to mount the door hinge to the vehicle body and door. The door cannot be adjusted with the centering bolts on. Substitute the centering bolts for standard bolts (w/ washers) when making adjustments.
- A bolt without a torque specification is shown in the standard bolt chart (See page SS-3).

1. INSPECT REAR DOOR PANEL SUB-ASSEMBLY LH

(a) Check that the clearance measurements of areas A to D are within the standard range.

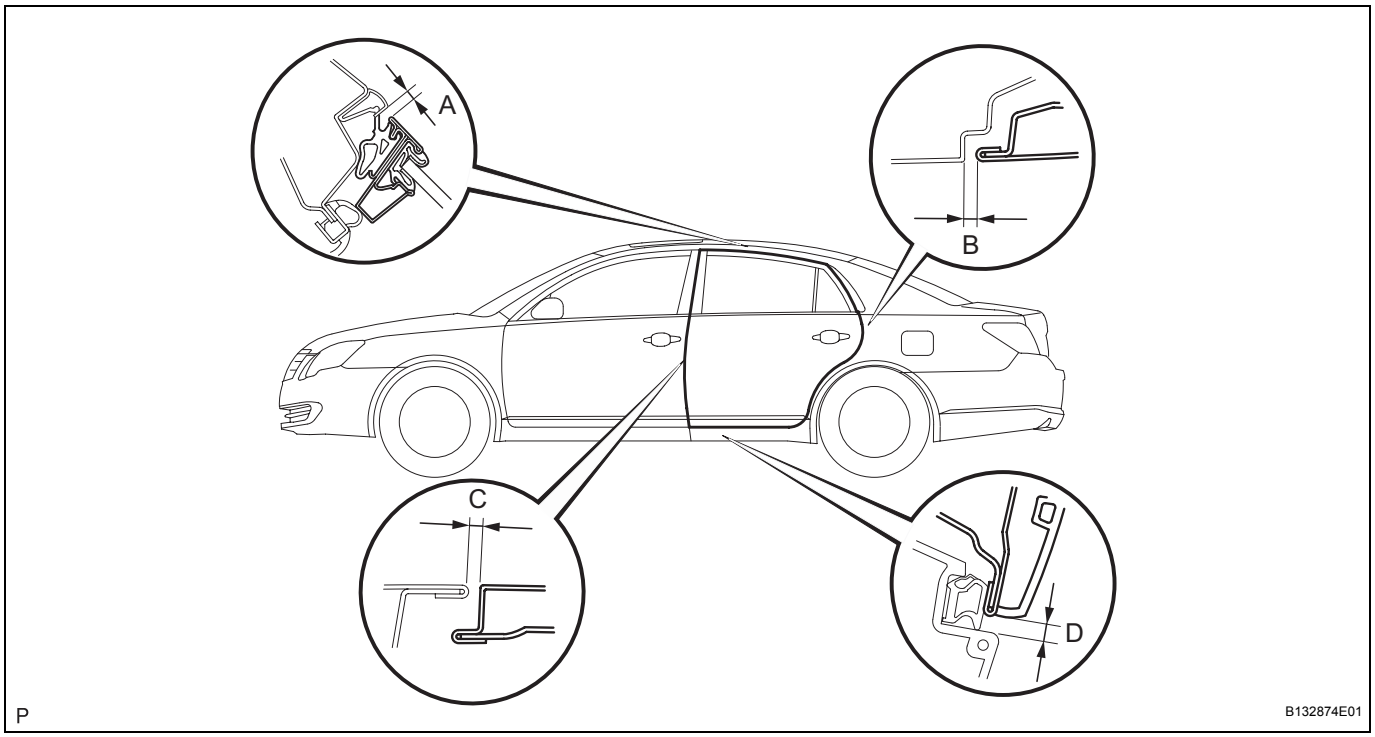

Standard

Area	Measurement	Area	Measurement
A	5.0 +- 1.5 mm (0.197 +- 0.059 in.)	B	4.2 +- 1.5 mm (0.165 +- 0.059 in.)
C	4.2 +- 1.5 mm (0.165 +- 0.059 in.)	D	5.4 +- 1.5 mm (0.213 +- 0.059 in.)

ED

2. ADJUST REAR DOOR PANEL SUB-ASSEMBLY LH

(a) Disconnect the negative (-) terminal cable from the battery.
CAUTION:
Work must be started at least 90 seconds after the ignition switch is turned to the LOCK position and the negative (-) terminal cable is disconnected from the battery. (The SRS is equipped with a back-up power source. If work is started within 90 seconds after disconnecting the negative (-) terminal battery and turning the ignition switch to the LOCK position, the SRS might be deployed.)

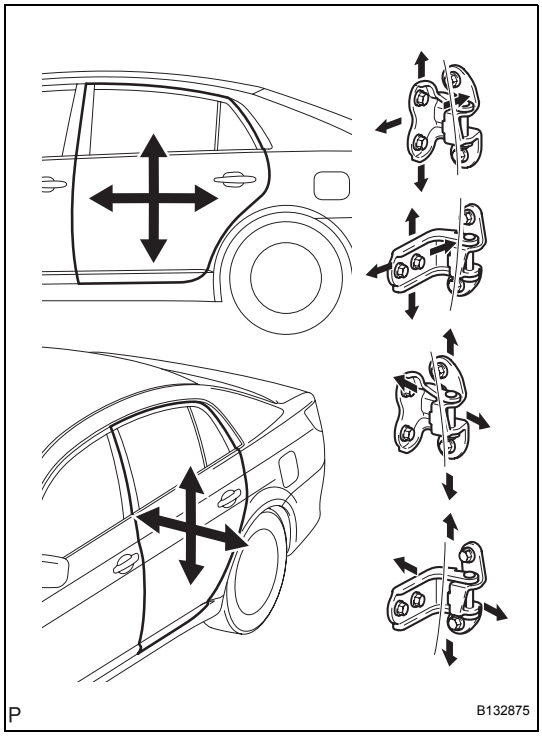

(b) Using SST, adjust the door horizontally and vertically by loosening the body side's hinge bolts.
SST 09812-00010

(c) Tighten the body side's hinge bolts after the adjustment.
Torque: 26 N*m (265 kgf*cm, 19 ft.*lbf)

(d) Horizontally and vertically adjust the door by loosening the door side's hinge bolts.

(e) Tighten the door side's hinge bolts after the adjustment.
Torque: 26 N*m (265 kgf*cm, 19 ft.*lbf)

ED

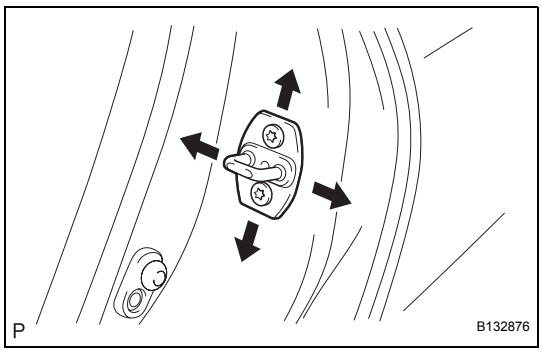

(f) Adjust the striker position by slightly loosening the striker mounting screws and hitting the striker with a plastic hammer.

(g) Tighten the striker mounting screws after the adjustment.
Torque: 23 N*m (235 kgf*cm, 17 ft.*lbf)

(h) Connect the negative (-) terminal cable from the battery.

(i) Initialize systems (See page IN-29).

(j) Check the SRS warning light (See page RS-28).

REASSEMBLY

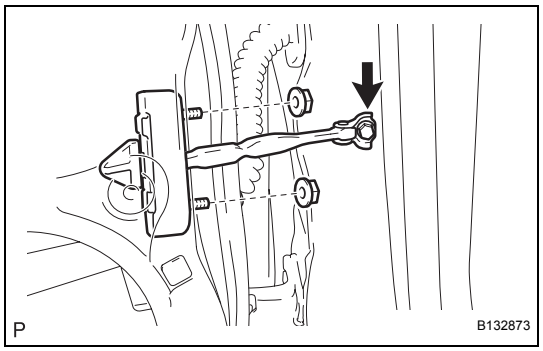

1. INSTALL REAR DOOR CHECK ASSEMBLY LH

(a) Apply MP grease to the sliding areas of the door check.

(b) Install the door check to the door panel with the 2 nuts.
Torque: 8.0 N*m (82 kgf*cm, 71 in.*lbf)

(c) Apply adhesive to the threads of the bolt.
Adhesive:
Part No. 08833-00070, THREE BOND 1324 or equivalent

(d) Install the door check to the body panel with the bolt.
Torque: 26 N*m (265 kgf*cm, 19 ft.*lbf)

2. INSTALL REAR DOOR OUTSIDE HANDLE FRAME SUB-ASSEMBLY LH

(a) Using a torx wrench (T25), install the rear door outside handle frame sub-assembly LH with the torx screw.
Torque: 7.0 N*m (71 kgf*cm, 62 in.*lbf)

3. INSTALL REAR DOOR OUTSIDE HANDLE FRAME SUB-ASSEMBLY LH

(a) Using a torx wrench (T25), install the rear door outside handle frame sub-assembly LH with the torx screw.
Torque: 7.0 N*m (71 kgf*cm, 62 in.*lbf)

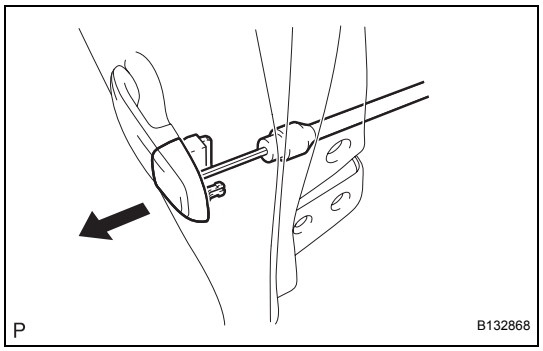

4. INSTALL REAR DOOR OUTSIDE HANDLE COVER RH

(a) Using a torx socket wrench (T30), install the cover (with the door lock key cylinder installed) with the torx screw.
Torque: 4.0 N*m (41 kgf*cm, 37 in.*lbf)

5. INSTALL REAR DOOR WITH MOTOR LOCK ASSEMBLY LH

(a) Apply MP grease to the sliding and rotating areas of the door lock.

(b) Install a new door lock wire harness packing.
NOTICE:
- **When reinstalling a door lock, always use new packing.**
- **Do not allow grease or dirt to contaminate the gap between the door panel and packing.**
- **Water will damage the door lock.**
- **Old packing or damaged packing cannot effectively protect the door lock against water.**

(c) Insert the control rod into the door lock, and then set it to the door panel.
NOTICE:
Make sure that the rod is securely engaged with the lock.

(d) Apply adhesive to the threads of the 3 torx screws.
Adhesive:
Part No. 08833-00070, THREE BOND 1324 or equivalent

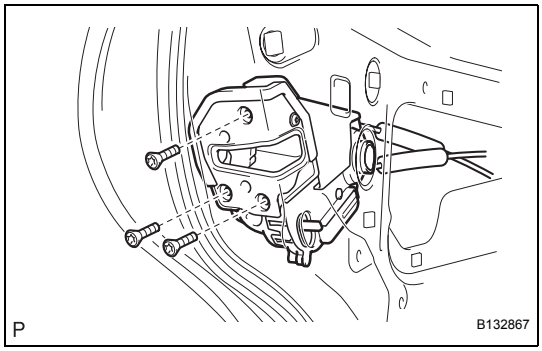

(e) Using a torx socket wrench (T30), install the door lock with the 3 torx screws.
Torque: 5.0 N*m (51 kgf*cm, 44 in.*lbf)

(f) Connect the door lock connector.

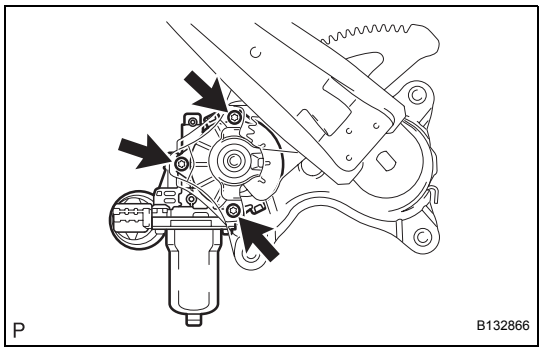

6. INSTALL POWER WINDOW REGULATOR MOTOR ASSEMBLY RH REAR

(a) Using a torx wrench (T25), install the power window regulator motor assembly RH rear with the 3 torx screws.
Torque: 5.4 N*m (55 kgf*cm, 48 in.*lbf)

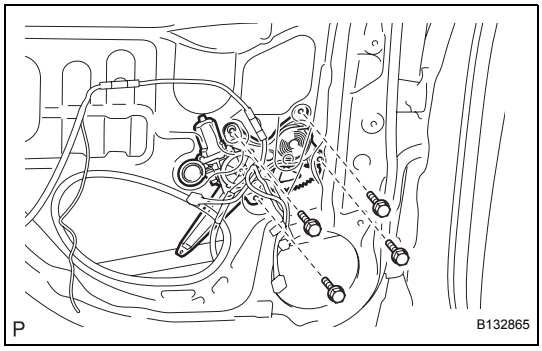

7. INSTALL REAR DOOR WINDOW REGULATOR SUB-ASSEMBLY LH

(a) Install the rear door window regulator sub-assembly LH with the 4 bolts.
Torque: 8.0 N*m (82 kgf*cm, 71 in.*lbf)

8. INSTALL REAR DOOR SERVICE HOLE COVER LH

(a) Apply butyl tape to the door.

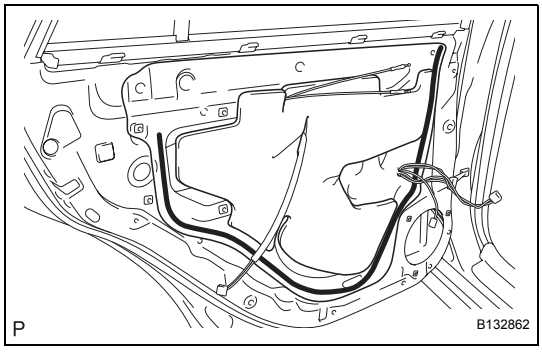

(b) Install the rear door service hole cover LH, as shown in the illustration.
HINT:
- There should be no wrinkles or folds after attaching the service hole cover.
- Check if the service hole cover is securely attached.

ED

LUGGAGE COMPARTMENT DOOR

COMPONENTS

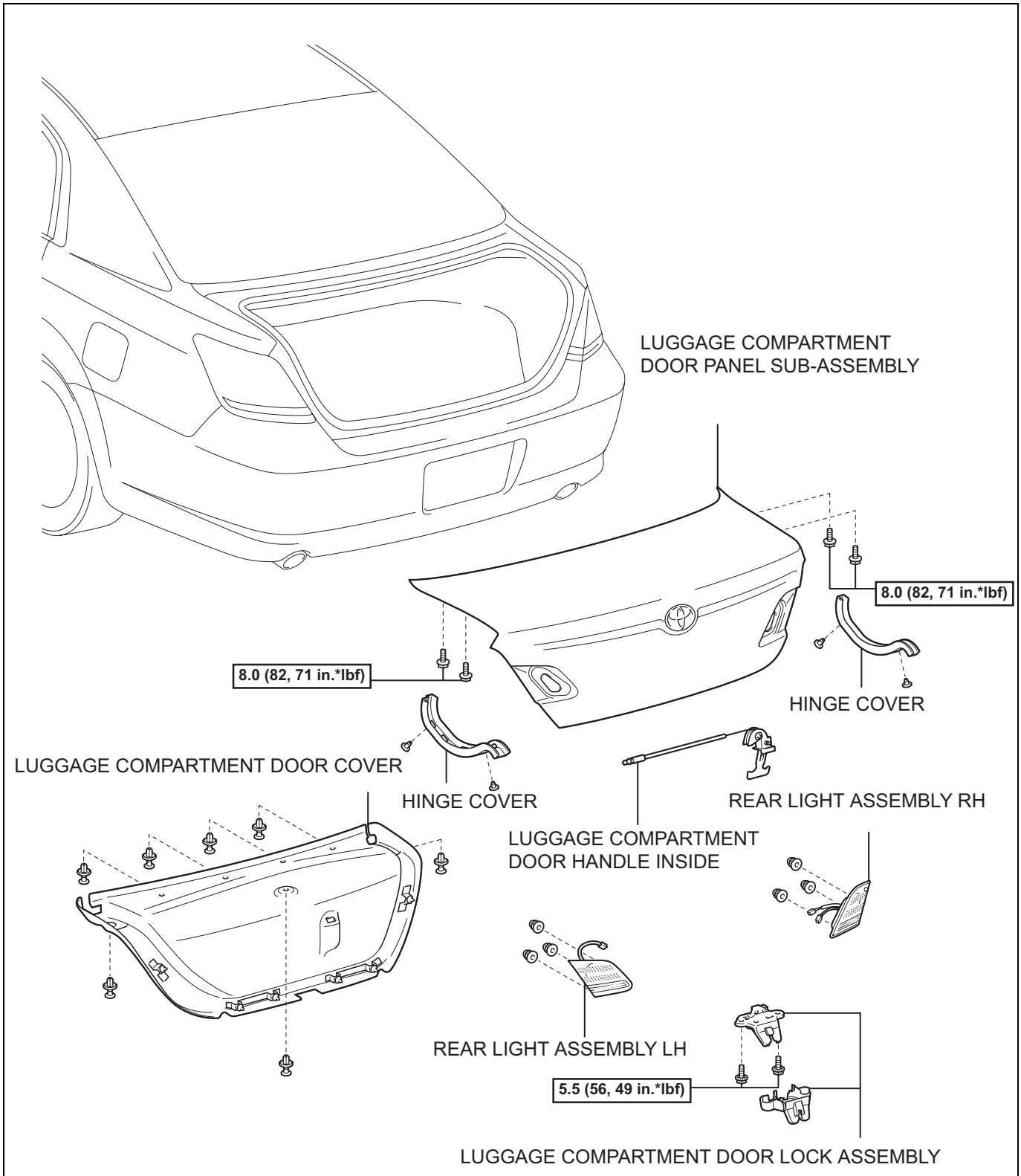

N*m (kgf*cm, ft.*lbf) : Specified torque

P

B115039E06

ED

DISASSEMBLY

HINT:

- The installation procedures are the removal procedures in reverse order. However, only installation procedures requiring additional information are included.
- A bolt without a torque specification is shown in the standard bolt chart (See page SS-3).

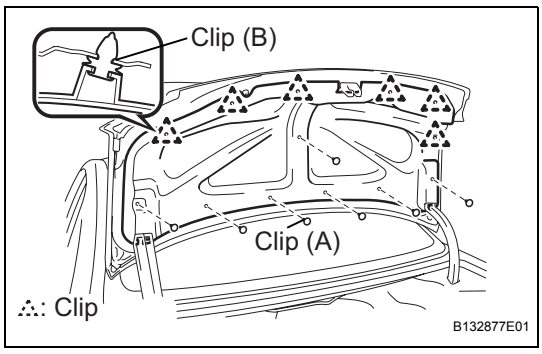

1. REMOVE LUGGAGE COMPARTMENT DOOR COVER

(a) Using a clip remover, remove the 7 clips (A).

(b) Disengage the 6 clips (B) and remove the luggage compartment door cover.

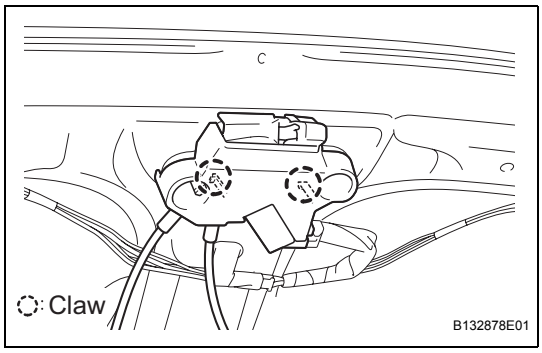

2. REMOVE LUGGAGE COMPARTMENT DOOR LOCK ASSEMBLY

(a) Disengage the 2 claws and remove the cover.

(b) Disengage the connector and control cable.

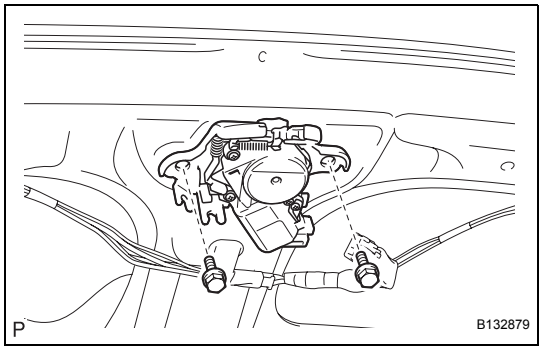

(c) Remove the 2 bolts and the luggage compartment door lock assembly.

3. REMOVE LUGGAGE COMPARTMENT DOOR HANDLE INSIDE

4. REMOVE REAR DOOR LOCK

5. REMOVE REAR DOOR LOCK

ED

ADJUSTMENT

HINT:
A bolt without a torque specification is shown in the standard bolt chart (See page SS-3).

1. INSPECT LUGGAGE COMPARTMENT DOOR PANEL SUB-ASSEMBLY

(a) Check that the clearance measurements of areas A to B are within the standard range.

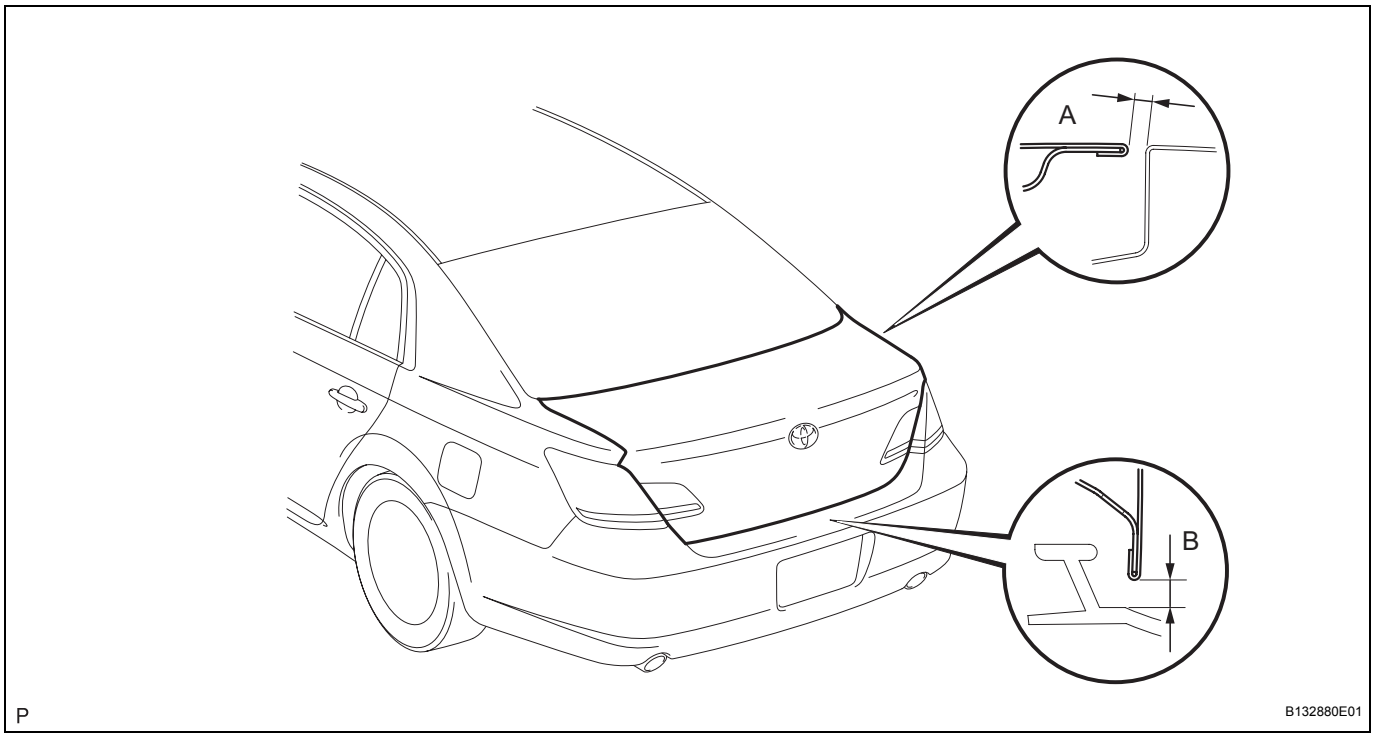

Standard

Area	Measurement	Area	Measurement
A	3.7 +- 1.5 mm (0.146 +- 0.059 in.)	B	5.8 +- 1.5 mm (0.228 +- 0.059 in.)

2. ADJUST LUGGAGE COMPARTMENT DOOR PANEL SUB-ASSEMBLY

(a) Remove the luggage compartment door cover.

(b) Adjust the door horizontally and vertically by loosening the door side's hinge bolts.

(c) Tighten the door side 's hinge bolts after the adjustment.
Torque: 8.0 N*m (82 kgf*cm, 71 in.*lbf)

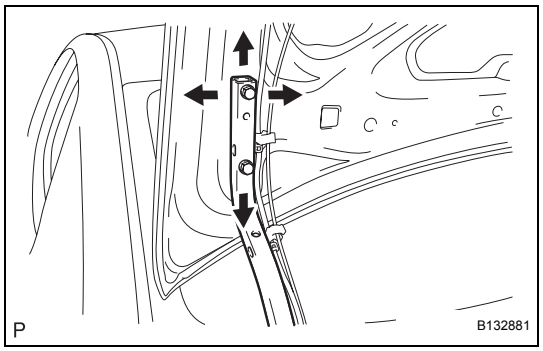

ED

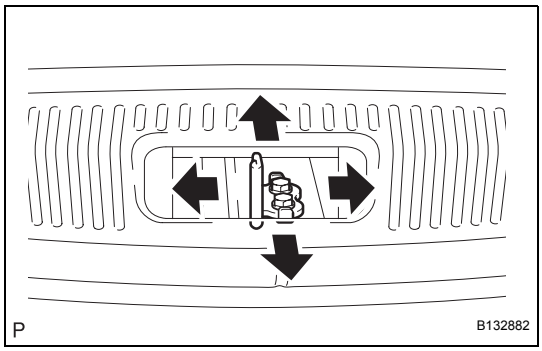

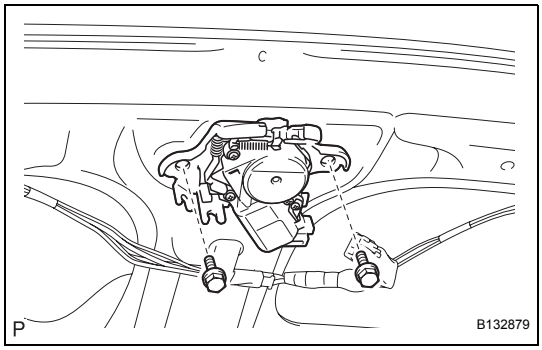

(d) Adjust the striker.
  (1) Remove the rear floor finish plate.
  (2) Using a hammer and a brass bar, tap the striker to adjust it.
  HINT:
  Adjust the door lock position by moving the striker so that the door striker can enter smoothly.
  (3) Tighten the 2 bolts after the adjustment.
  Torque: 5.5 N*m (56 kgf*cm, 49 in.*lbf)

REASSEMBLY

1. REMOVE LUGGAGE COMPARTMENT DOOR LOCK ASSEMBLY

(a) Install the luggage compartment door lock assembly with the 2 bolts.
  Torque: 5.5 N*m (56 kgf*cm, 49 in.*lbf)
(b) Install the control cable.
(c) Connect the connector.
(d) Install the cover.

LUGGAGE DOOR HINGE TORSION BAR

COMPONENTS

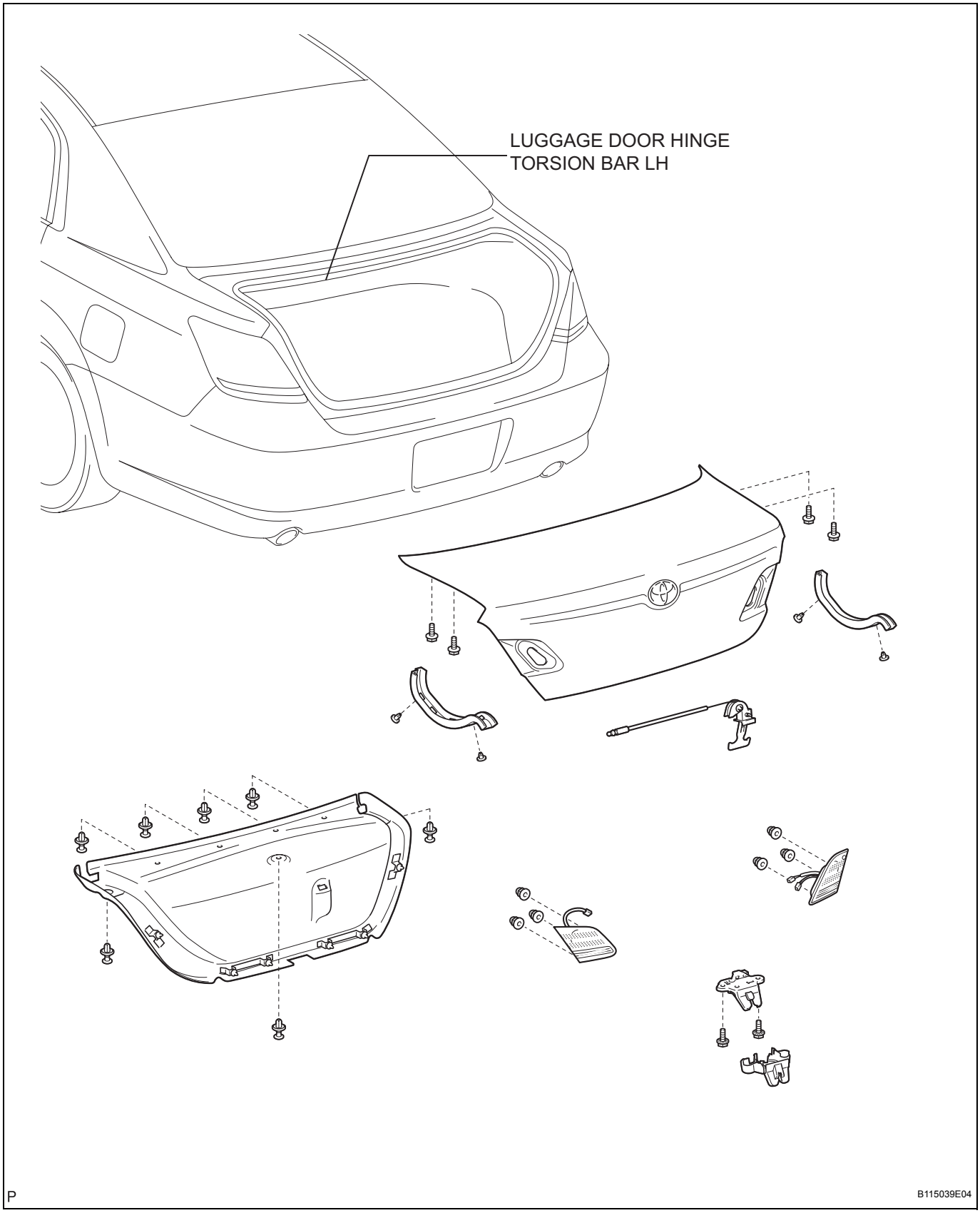

REMOVAL

HINT:

- The installation procedures are the removal procedures in reverse order. However, only installation procedures requiring additional information are included.
- Use the same procedures for the RH side and LH side.
- The procedures listed below are for the LH side.
- After removing the torsion bar, use your hand to open and close the luggage door. Make sure the luggage door can open and close smoothly.
- The RH side torsion bar is on the upper side and the LH side torsion bar is on the lower side. The installation should be performed in the order of RH to LH and removal should be performed in the order of LH to RH.

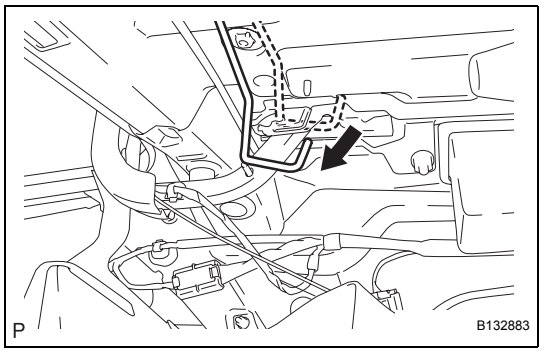

1. REMOVE LUGGAGE DOOR HINGE TORSION BAR LH

(a) LH side:
Remove the luggage door hinge torsion bar from the support bracket.

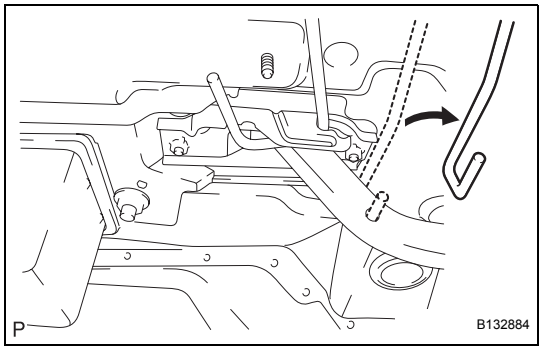

(b) RH side:
Move the torsion bar. Then remove the luggage door hinge torsion bar from the hinge RH.

INSTALLATION

1. INSTALL LUGGAGE DOOR HINGE TORSION BAR LH

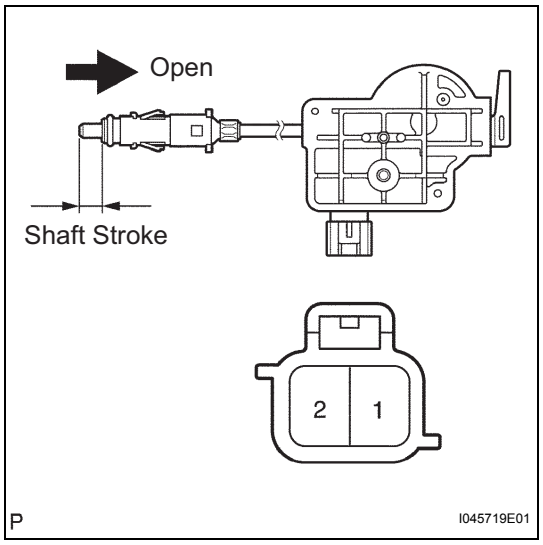

FUEL LID OPENER MOTOR ASSEMBLY

INSPECTION

1. INSPECT FUEL LID LOCK CONTROL ASSEMBLY

(a) Remove the fuel lid lock control assembly.

(b) Apply battery voltage to the lock control assembly and check that the motor operates in the open direction.

NOTICE:

While using the battery during inspection, do not bring the positive and negative tester probes too close to each other as a short circuit may occur.

OK:

Measurement Condition	Specified Condition
Battery positive (+) → Terminal 2 Battery negative (-) → Terminal 1	Move to open direction

If the result is not as specified, replace the fuel lock control assembly.

(c) Check that the shaft strokes.

Standard:

10.3 mm (0.406 in.) or more

If the result is not as specified, replace the fuel lock control assembly.

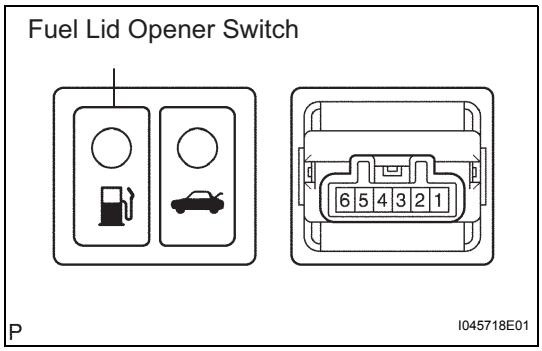

FUEL LID OPENER SWITCH

INSPECTION

1. INSPECT FUEL LID OPENER SWITCH

(a) Remove the fuel lid opener switch.

(b) Check the fuel lid opener switch resistance.

Resistance

Tester Connection	Switch Position	Specified Condition
2-3	OFF	10 kΩ or higher
2-3	ON	Below 1 Ω

If the result is not as specified, replace the fuel lid opener switch.

ENGINE IMMOBILISER SYSTEM

PRECAUTION

1. PRECAUTION FOR DISCONNECTING BATTERY TERMINAL

NOTICE:

When disconnecting the negative (-) battery terminal, initialize the following system(s) after the terminal is reconnected.

System Name	See Procedure
Power Window Control System	IN-29
Sliding Roof System	

PARTS LOCATION

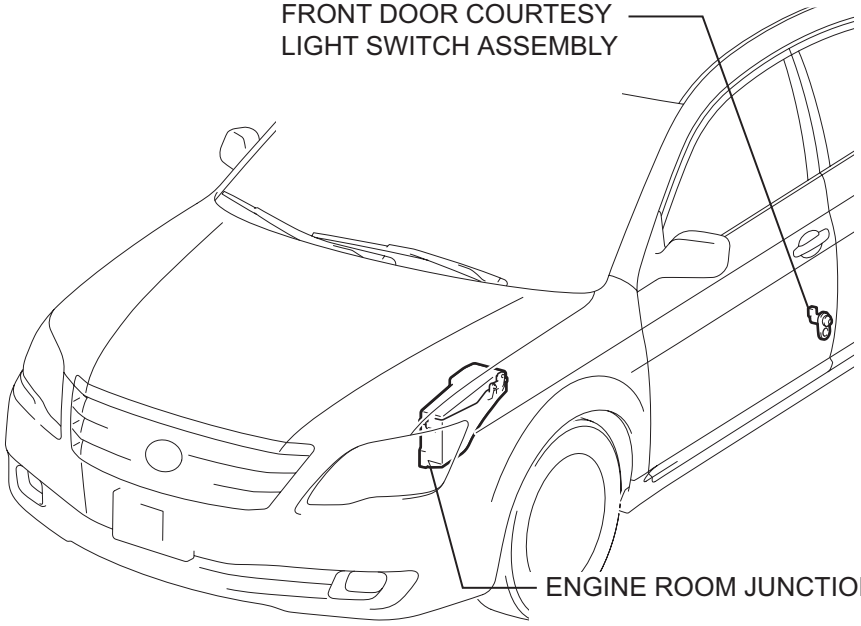

P

B115049E01

SYSTEM DIAGRAM

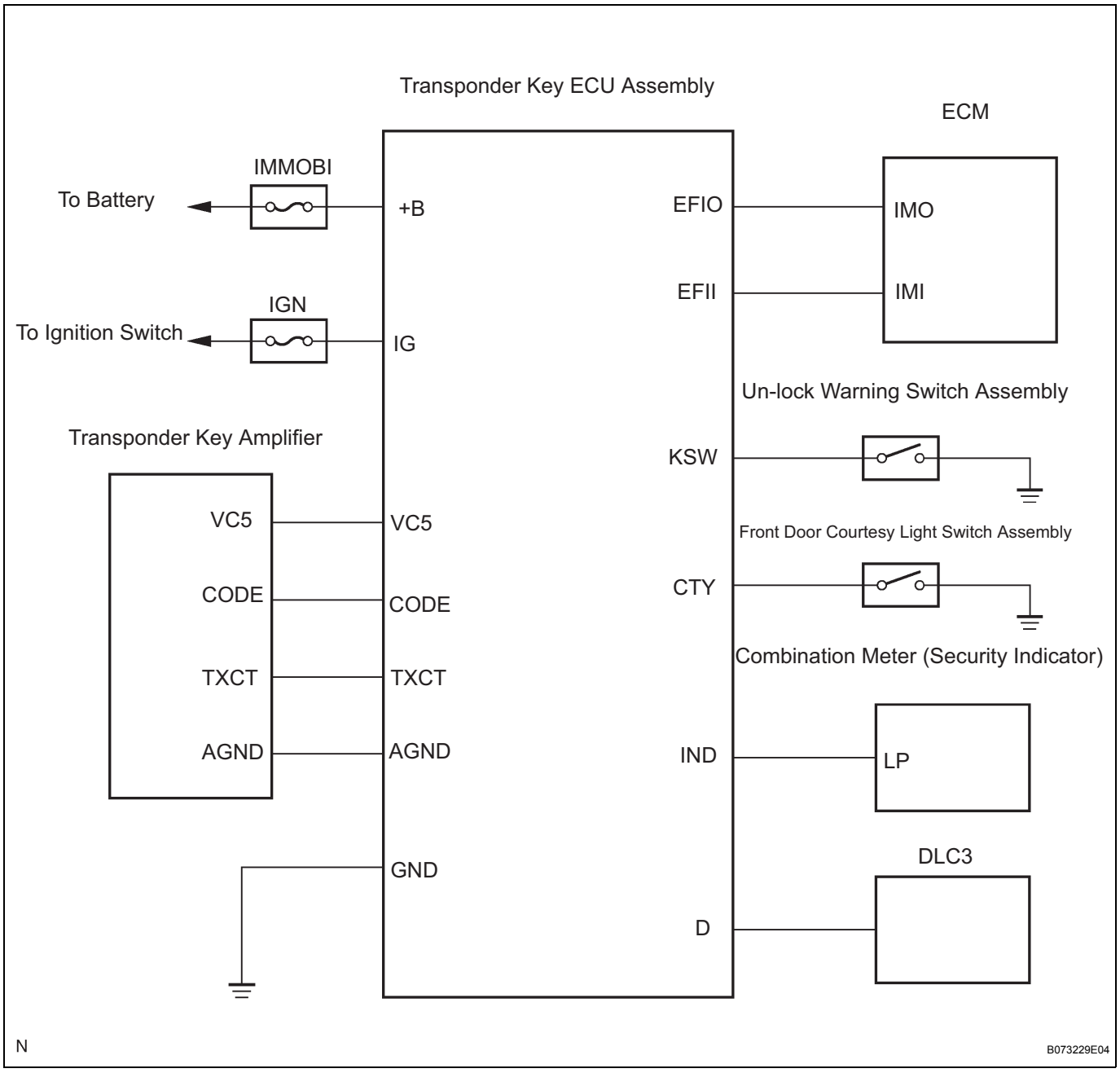

SYSTEM DESCRIPTION

1. ENGINE IMMOBILISER SYSTEM DESCRIPTION

(a) The engine immobiliser system is designed to prevent the vehicle from being stolen. This system uses a transponder key ECU assembly that stores the key codes of authorized ignition keys. If an attempt is made to start the engine using an unauthorized key, the ECU sends a signal to the ECM to prohibit fuel delivery and ignition, effectively disabling the engine.

2. FUNCTION OF MAIN COMPONENT

Component	Outline
Transponder key coil/amplifier	When key is inserted in ignition key cylinder, key coil receives key code. Then amplifier amplifies ID code and outputs it to transponder key ECU assembly.
Un-lock warning switch assembly	Detects if key is in ignition key cylinder and outputs results to transponder key ECU assembly.
ECM	Through SFI communication, ECM receives ID verification results from transponder key ECU assembly. ECM also verifies ECUs. Then judgement of whether or not to immobilise engine is made.
Security indicator	Depending on operation of theft warning ECU (theft deterrent ECU), interior security indicator light comes on or starts blinking.

3. SYSTEM FUNCTION

(a) When the transponder key ECU assembly detects that the key unlock warning switch is ON, the ECU provides current to the transponder key coil and produces a faint electric wave. A transponder chip in the key grip receives the faint electric wave. Upon receiving the faint electric wave, the transponder chip outputs a key ID code signal. The transponder key coil receives this signal, the transponder key amplifier amplifies it, and then the signal is transmitted to the ECU.

The ECU matches the key's ID code with the vehicle's ID code, previously registered in the ECU, and then communicates the results to the ECM using SFI communication.

After the identification results show that the key's ID code matches the vehicle's ID code and the ECU has confirmed their match: 1) the immobiliser system does not immobilise the engine and the engine starting controls (fuel injection control and ignition control) enter standby mode; and 2) the ECU transmits a security indicator signal that communicates "indicator off" to the theft warning ECU (theft deterrent ECU). Then, the theft warning ECU turns off the security indicator light.

HOW TO PROCEED WITH TROUBLESHOOTING

HINT:
Use this procedure to troubleshoot the engine immobiliser system.
The intelligent tester should be used in steps 4, 5 and 7.

1	VEHICLE BROUGHT TO WORKSHOP

NEXT

2	CUSTOMER PROBLEM ANALYSIS CHECK AND SYMPTOM CHECK

NEXT

3	CRANK ENGINE FOR MORE THAN 10 SECONDS

NEXT

4	CHECK FOR DTCS

(a) Check for DTCs and note any codes that are output.
(b) Delete the DTC.
(c) Recheck for DTCs. Based on the DTC output, try to force output of the same SFI system DTC or engine immobiliser system DTC by simulating the operation indicated by the DTC.
  (1) If the DTC does not reoccur, proceed to A.
  (2) If the SFI system DTC reoccurs, proceed to B.
  (3) If the engine immobiliser system DTC reoccurs, proceed to C.

B	Go to SFI SYSTEM
C	Go to step 8

A

5	READ VALUE OF INTELLIGENT TESTER

(a) Connect the intelligent tester to the Controller Area Network Vehicle Interface Module (CAN VIM). Then connect the CAN VIM to the DLC3.
(b) Turn the ignition switch ON and push the intelligent tester main switch ON.
(c) Read the DATA LIST according to the display on the tester.

OK:
ON (Key is in ignition key cylinder

Item	Measurement Item/Display (Range)	Normal condition	Diagnostic Note
KEY SW	Unlock warning switch signal/ON or OFF	ON: Key is in ignition key cylinder OFF: No key is in ignition key cylinder	-

NG → **Go to DTC B2780**

EI

OK

6 PROBLEM SYMPTOMS TABLE

(a) If the fault is not listed on the problem symptoms table, proceed to A.
(b) If the fault is listed on the problem symptoms table, proceed to B.

B → **Go to step 8**

A

7 OVERALL ANALYSIS AND TROUBLESHOOTING

(a) DATA LIST/ACTIVE TEST (See page EI-19)
  (1) Inspection with the intelligent tester (DATE LIST).
  (2) Inspection with the intelligent tester (ACTIVE TEST).
(b) Terminals of ECU (See page EI-13)

NEXT

8 ADJUST, REPAIR OR REPLACE

NEXT

9 CONFIRMATION TEST

NEXT

END

REGISTRATION

1. PERFORM NEW CODE REGISTRATION

(a) When adding master keys and sub-keys (additional registration):

(1) Register the key code (immobiliser code) in the transponder key ECU assembly.

Target ECU	See procedure
Transponder key ECU assembly	Procedure "A"

(b) When replacing the transponder key ECU assembly (automatic registration):

(1) Register the key code (immobiliser code) in the transponder key ECU assembly.

Target ECU	See procedure
Transponder key ECU assembly	Procedure "B"

(2) Register the ECU COMMUNICATION ID between the ECM and the transponder key ECU assembly.

Target ECU	See procedure
ECM	Procedure "C"

(c) When replacing the ECM:

(1) Register the ECU COMMUNICATION ID between the ECM and the transponder key ECU assembly.

Target ECU	See procedure
Transponder key ECU assembly	Procedure "C"

(d) Erasure of key code:

(1) Erase the key code.

Target ECU	See procedure
Transponder key ECU assembly	Procedure "D"

2. PERFORM KEY REGISTRATION

(a) When an ignition key is inserted into the ignition cylinder, the key code (immobiliser code) registration is automatic. In this mode, a maximum of 4 key codes for 3 master keys and 1 sub-key can be registered. Any order of registration for the master keys and sub-keys is fine because the transponder key ECU assembly can distinguish the types of keys.

HINT:

- When a new transponder key ECU assembly is installed, key codes (immobiliser codes) must be registered with ignition keys.
- New transponder key ECU assemblies are automatically set to automatic key code registration mode.

Automatic Key Code Registration (PROCEDURE "B")

Procedure	Security Indicator Condition
1. Start (Procedure "D")	Blinking occurs until the first key is inserted.
2. Insert the key into the ignition key cylinder.	ON

Procedure	Security Indicator Condition
3. Registration begins. HINT: The registration will be completed approx. 1 sec. after the key is inserted.	OFF HINT: Approx. 1 sec.
4. Remove the key.	ON HINT: When the maximum number of the key codes is registered, the security indicator remains off until the last key registered is removed. After it is removed, the security indicator starts blinking.
5. Register another key ? Yes: Go to procedure "D". No: Go to procedure "E".	
6. End (Procedure "E")	

HINT:

- In automatic key code registration mode, when no key is inserted in the ignition key cylinder, the security indicator remains on.
- When the immobiliser system is operating normally and the key is pulled out, the security indicator blinks continuously.
- If the key code registration has failed in automatic key code registration mode, code 2-1 will be output from the security indicator. Trying to re-register an already registered key will cause code 2-2 to be output when the key is inserted. If the number of registered key codes exceeds the limit, code 2-3 will be output from the security indicator. The output details are shown below.

Security Indicator:

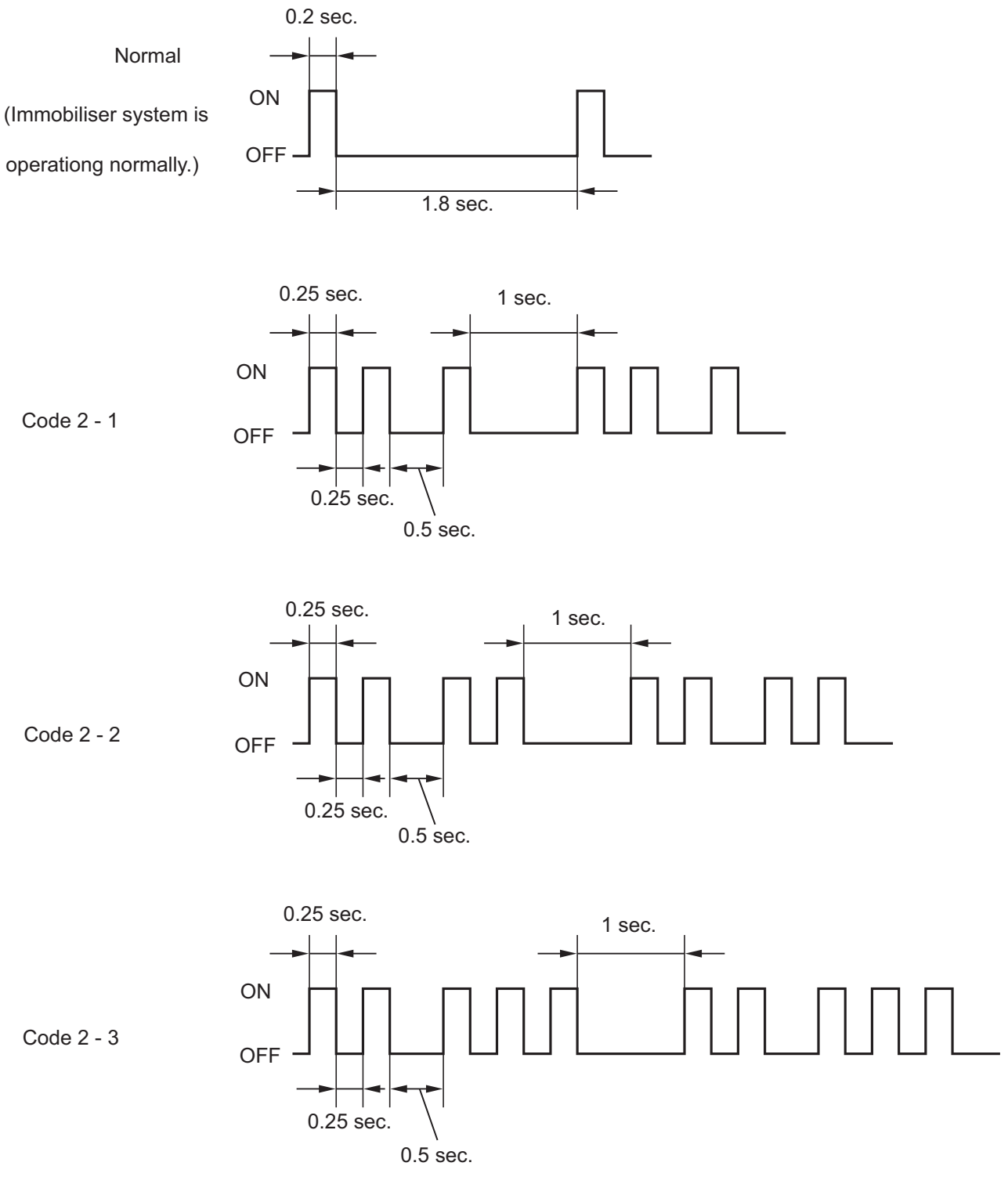

(b) Finish the automatic key code registration mode. The automatic key code registration mode can be forced to end, when at least 1 key code (immobiliser code) for the master key has been registered.

(1) Turn the ignition switch on and off 5 times within 10 seconds using the already registered master key.

3. PERFORM REGISTRATION OF ADDITIONAL KEY

(a) Register additional keys by using the intelligent tester.

HINT:

- A maximum of 5 master key codes and 3 sub-key codes can be registered.
- Registration mode will end if each step is not completed within the specified time.
- When the ignition cylinder or the key cylinder set is replaced, remove the transmitter module from the original master key. Then install this transmitter module to a new key and use the new key as the master key. If necessary, use this master key to register other keys.

NOTICE:

When the ignition key cylinder has been replaced, locking and unlocking doors is possible with the new master key's transmitter module (taken from the original master key). However, the new master key will not be able to lock and unlock doors through the door key cylinder. Keep the original master key. If a battery in the new master key's transmitter module fails, the original master key can be used to lock and unlock doors through the door key cylinder.

EI

Additional Registration (PROCEDURE "A")

Procedure	Time (Completion of operation)	Security indicator Condition
1. Start 2. Insert the already registered master key in the ignition key cylinder and turn the ignition switch on.	-	The indicator will blink until the first key is inserted.
3. Intelligent tester operation: (1) Select IMMOBILISER. (2) Select ID UTILITY. (3) Select TRANS CODE REG HINT: After completing the above operation, proceed to the next step in accordance with the prompts on the tester screen.	Within 120 sec.	OFF
4. Remove the master key.	Within 20 sec. of the instruction on the tester.	ON
5. Insert the key to be registered in the ignition key cylinder.	Within 10 sec.	
6. After 60 sec. the key is registered. HINT: Security indicator goes off.	-	Blinking
7. Next		OFF
8. End		

HINT:

- A brief outline of procedures for key code registration is shown on this page. Refer to the intelligent tester screen instructions for more information.
- When the immobiliser system is operating normally and the key is pulled out, the security indicator blinks continuously.
- If the key code registration has failed in automatic key code registration mode, code 2-1 will be output from the security indicator. Trying to re-register an already registered key will cause code 2-2 to be output when the key is inserted. If the number of registered key codes exceeds the limit, code 2-3 will be output from the security indicator. The output details are shown in step 2 (new registration).

4. ERASURE OF KEY CODE

(a) Erase key codes using the intelligent tester.

HINT:

- All key codes are erased except for the master key, which is used for erasing the key codes. In order to use a key whose code has been erased, a new key code must be registered.
- Registration will be cancelled if each step is not completed within the specified time.

Erasing Key Code (PROCEDURE "D")

Procedure	Time (Completion of operation)	Security Indicator Condition
1. Start	-	The indicator will blink until the first key is inserted.
2. Insert the already registered master key in the ignition key cylinder and turn the ignition switch on.		
3. Intelligent tester operation: (1) Select IMMOBILISER. (2) Select ID UTILITY. (3) Select TRANS CODE REG HINT: After completing the above operation, proceed to the next step in accordance with the prompts on the tester screen.	Within 120 sec.	OFF
4. Remove the master key.	Within 10 sec. of the instruction on the tester.	ON for 1 sec. then OFF
5. Next	-	Blinking
6. End		

HINT:

- A brief outline of procedures for key code registration is shown on this page. Refer to the intelligent tester screen's instructions for more information.
- When the immobiliser system is operating normally and the key is pulled out, the security indicator blinks continuously.

5. ECU COMMUNICATION ID REGISTRATION

NOTICE:

- **The ECU COMMUNICATION ID should be registered when the transponder key ECU assembly and/or the ECM is replaced in order to match these ECM COMMUNICATION ID.**
- **The engine cannot be started unless the ECM COMMUNICATION ID matches.**

(a) Register the ECU Communication ID (PROCEDURE "C")

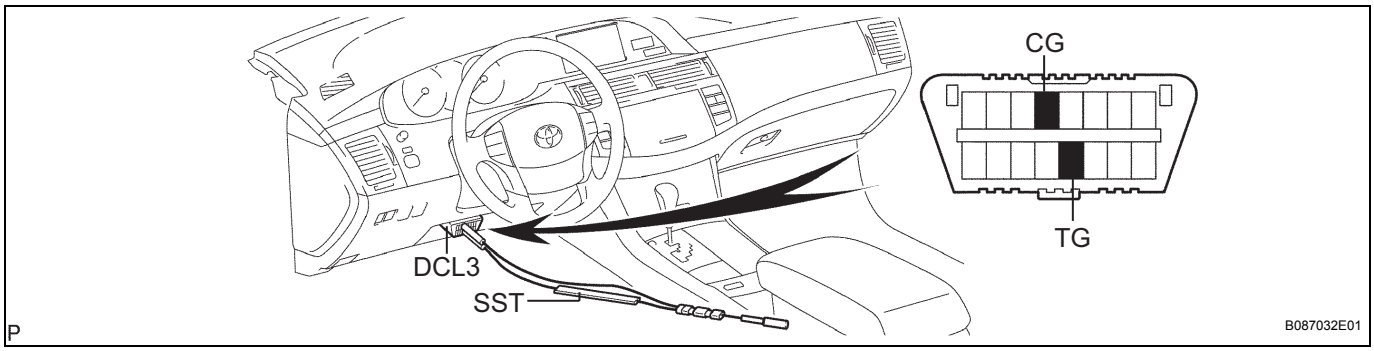

(1) Using SST, connect terminals TC and CG of the DLC3.
SST 09843-18040

(2) Turn the ignition switch ON (do not start the engine) and leave it for 30 minutes.

(3) Turn the ignition switch OFF and disconnect terminals TC and CG.

(4) Check that the engine starts.

PROBLEM SYMPTOMS TABLE

HINT:

- Inspect the fuse and relay before confirming the suspected area in the table below.
- Inspect each malfunction circuit in numerical order for the corresponding symptom.

If any malfunction still exists even after checking and confirming that all the circuits are normal, replace the ECU.

ENGINE IMMOBILISER SYSTEM

Symptom	Suspected area	See page
Immobiliser is not set. (Engine starts with key codes other than the registered key code.)	1. Door courtesy switch circuit	EI-40
	2. Transponder key ECU assembly	-
Engine does not start.	1. Key	EI-19
	2. Key unlock warning switch circuit	EI-22
	3. Transponder key amplifier circuit	EI-25
	4. Transponder key ECU assembly	-
	5. ECM	-
Security indicator is always ON.	1. Security indicator light	EI-38
	2. Transponder key ECU assembly	-
Security indicator is always ON. (Although code has been registered in the automatic registration mode, indicator does not go off.)	1. Transponder key amplifier circuit	EI-25
	2. Transponder key ECU assembly	-
Security indicator is OFF.	1. Security indicator light circuit	EI-38
	2. Transponder key ECU assembly	-
Security indicator is abnormally blinking.	Transponder key ECU assembly	-
No code is output.	1. ECU power source circuit	EI-42
	2. Diagnosis circuit	EI-44
	3. Transponder key ECU assembly	-

TERMINALS OF ECU

1. CHECK TRANSPONDER KEY AMPLIFIER

Connector Front View:

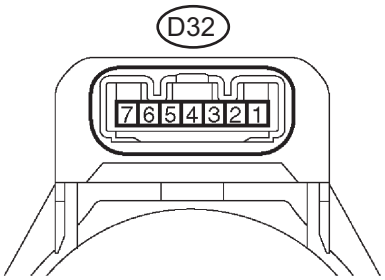

B065593E14

(a) Disconnect the D32 amplifier connector.
(b) Measure the resistance between the terminal of the wire harness side connector and body ground.

Symbols (Terminal No.)	Wiring Color	Terminal Description	Condition	Specified Condition
AGND (D32-7) - Body ground	V - Body ground	Ground	Always	Below 1 Ω

If the result is not as specified, there may be a malfunction on the wire harness side.

(c) Reconnect the D32 amplifier connector.
(d) Measure the voltage of the connector.

Symbols (Terminal No.)	Wiring Color	Terminal Description	Condition	Specified Condition
VC5 (D32-1) - AGND (D32-7)	W - V	Power source	No key in ignition key cylinder → Key inserted	0 V → 4.6 to 5.4 V
CODE (D32-4) - AGND (D32-7)	LG - V	Demodulated signal of key code data	No key in ignition key cylinder → Key inserted	Pulse generation (see waveform 1)
TXCT (D32-5) - AGND (D32-7)	BR - V	Key code output signal	No key in ignition key cylinder → Key inserted	Pulse generation (see waveform 2)

If the result is not as specified, the amplifier may have a malfunction.

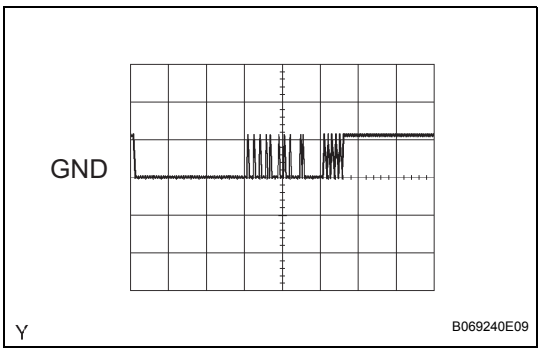

B069240E09

(e) Inspect using an oscilloscope.
(1) Waveform 1 (Reference):

Terminal	CODE - GND
Tool Setting	10 V/DIV., 20 ms/DIV.
Condition	No key in ignition key cylinder → Key inserted

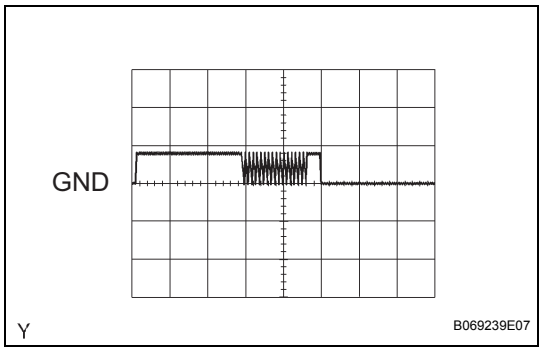

(2) Waveform 2 (Reference):

Terminal	TXCT - GND
Tool Setting	5 V/DIV., 20 ms/DIV.
Condition	No key in ignition key cylinder → Key inserted

2. CHECK TRANSPONDER KEY ECU ASSEMBLY

Connector Front View:

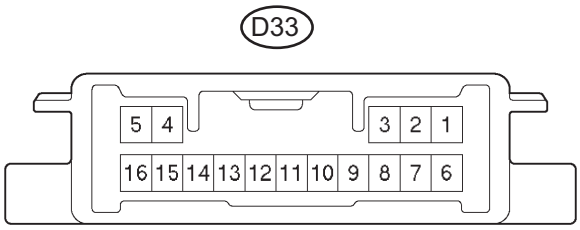

(a) Disconnect the D33 ECU connector, and measure the voltage and resistance between each terminal of the wire harness side connector.

Symbols (Terminal No.)	Wiring Color	Terminal Description	Condition	Specified Condition
+B (D33-1) - GND (D33-16)	Y - W-B	Battery	Always	10 to 14 V
IG (D33-2) - AGND (D33-5)	G - V	Ignition switch	Ignition switch OFF → ON	Below 1 V → 10 to 14 V
GND (D33-16) - Body ground	W-B - Body ground	Ground	Always	Below 1 Ω

If the result is not as specified, there may be a malfunction on the wire harness side.

(b) Reconnect the D33 ECU connector, and measure the voltage between each terminal of the connector.

Symbols (Terminal No.)	Wiring Color	Terminal Description	Condition	Specified Condition
KSW (D33-3) - GND (D33-16)	B - W-B	Unlock warning switch	No key in ignition key cylinder → Key inserted	10 to 14 V → Below 1 V
TXCT (D33-4) - AGND (D33-5)	BR - V	Transponder key amplifier communication signal	Ignition switch ON	Waveform 1
CTY (D33-7) - GND (D33-16)	L - W-B	Courtesy signal	Driver side door is open → closed	10 to 14 V → Below 1 V
IND (D33-8) - GND (D33-16)	P - W-B	Security indicator signal	Engine immobiliser system SET → UNSET	3 to 5V → Below 1 V
D (D33-9) - GND (D33-16)	O - W-B	Diagnosis tester communication	Ignition switch ON	Pulse generation
EFII (D33-12) GND (D33-16)	L - W-B	ECM input signal	Ignition switch ON	Waveform 4
EFIO (D33-13) - GND (D33-16)	BR - W-B	ECM output signal	Ignition switch ON	Waveform 3
VC5 (D33-14) - AGND (D33-5)	W - V	Power source	Ignition switch OFF → ON	Below 1 V → 4.6 to 5.4 V
CODE (D33-15) - AGND (D33-5)	LG - V	Transponder key amplifier ground	Ignition switch ON	Waveform 2

If the result is not as specified, the ECU may have a malfunction.

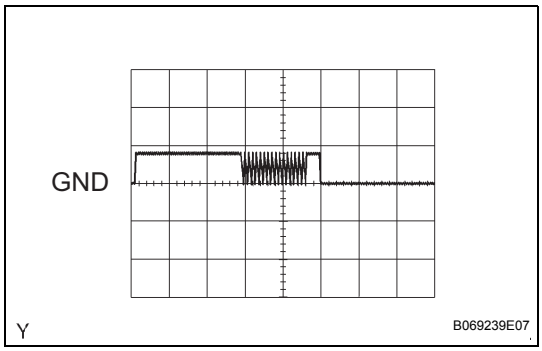

(c) Inspect using an oscilloscope.
(1) Waveform 1 (Reference):

Terminal	TXCT - GND
Tool Setting	5 V/DIV., 20 ms/DIV.
Condition	Ignition switch ON

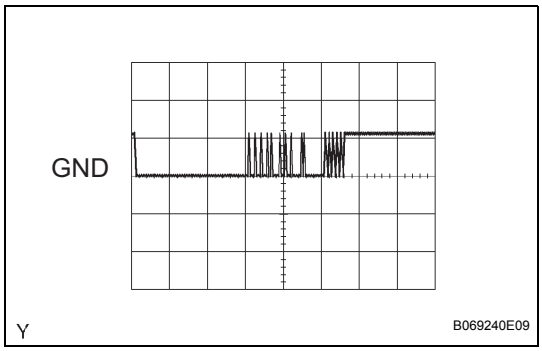

(2) Waveform 2 (Reference):

Terminal	CODE - GND
Tool Setting	5 V/DIV., 20 ms/DIV.
Condition	Ignition switch ON

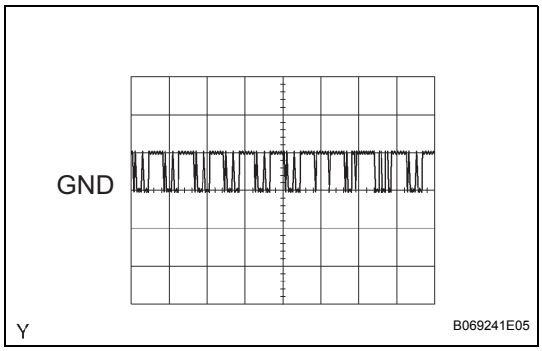

(3) Waveform 3 (Reference):

Terminal	EFIO - GND
Tool Setting	10 V/DIV., 500 ms/DIV.
Condition	Ignition switch ON

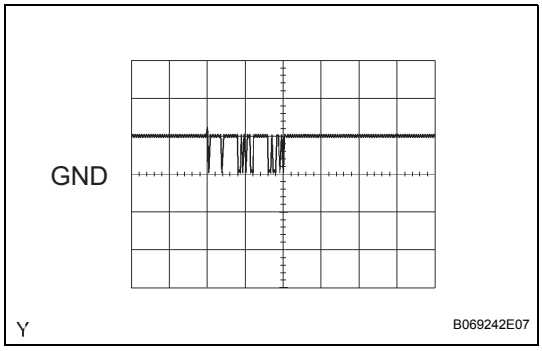

(4) Waveform 4 (Reference):

Terminal	EFII - GND
Tool Setting	10 V/DIV., 500 ms/DIV.
Condition	Ignition switch ON

(d) Measure the resistance between each terminal of the connector.

Symbols (Terminal No.)	Wiring Color	Terminal Description	Condition	Specified Condition
AGND (D33-5) - GND (D33-16)	V - W-B	Amplifier ground circuit	Always	Below 1 Ω

If the result is not as specified, the ECU may have a malfunction.

3. CHECK ECM

Connector Front View:

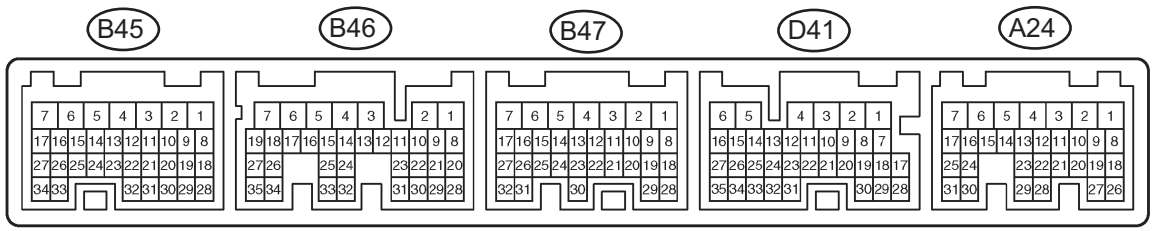

G036662E06

(a) Disconnect the B45 and D41 ECM connectors.
(b) Measure the voltage and resistance between each terminal of the wire harness side connectors and body ground.

Symbols (Terminal No.)	Wiring Color	Terminal Description	Condition	Specified Condition
IMO (D41-15) - E01 (B45-7)	BR - W-B	Transponder key ECU input signal	No key in ignition key cylinder → Key inserted	Pulse generation (see waveform 1)
IMI (D41-16) - E01 (B45-7)	L - W-B	Transponder key ECU output signal	No key in ignition key cylinder → Key inserted	Pulse generation (see waveform 2)
E01 (B45-7) - Body ground	W-B - Body groubd	Ground	Always	Below 1 Ω

If the result is not as specified, there may be a malfunction on the wire harness side.

(c) Inspect using an oscilloscope.
(1) Waveform 1 (Reference):

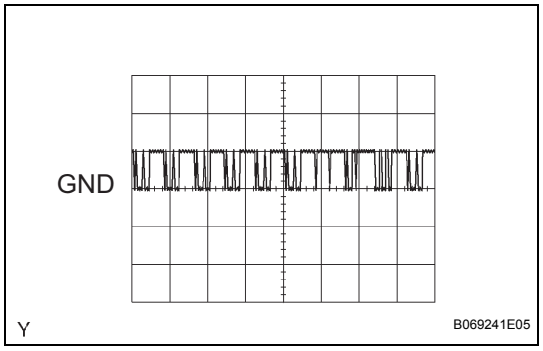

B069241E05

Terminal	IMI - GND
Tool Setting	10 V/DIV., 500 ms/DIV.
Condition	No key in ignition key cylinder → Key inserted

(2) Waveform 2 (Reference):

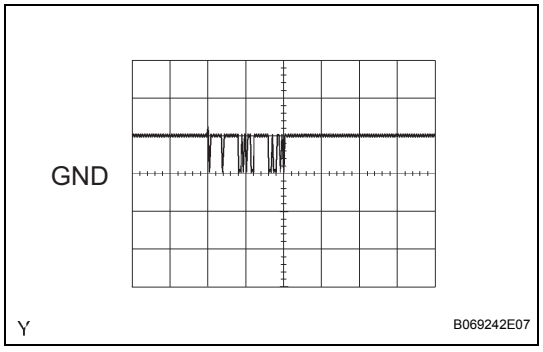

B069242E07

Terminal	IMO - GND
Tool Setting	10 V/DIV., 500 ms/DIV.
Condition	No key in ignition key cylinder → Key inserted

EI

DIAGNOSIS SYSTEM

1. DESCRIPTION

(a) The ECM controls the vehicle's immobiliser system functions. Immobiliser system data and Diagnostic Trouble Code (DTCs) can be read through the vehicle's Data Link Connector 3 (DLC3). In some cases, a malfunction may be occurring in the immobiliser system even though the security indicator light is not illuminated. When the system seems to be malfunctioning, use the intelligent tester to check for malfunctions and perform repairs.

2. CHECK DLC3

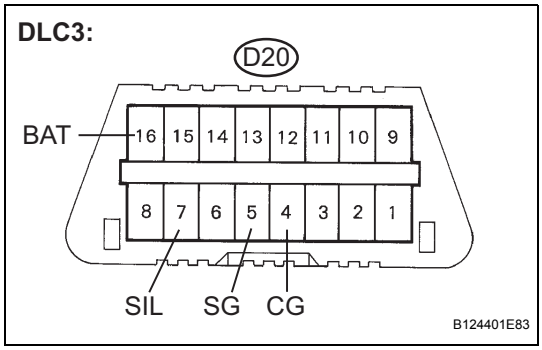

(a) The vehicle uses ISO 15765-4 for its communication protocol. The terminal arrangement of the DLC3 complies with SAE J1962 and matches the ISO 15765-4 format.

Symbol	Terminal No.	Name	Reference terminal	Result	Condition
SIL	7	Bus "+" line	5 - Signal ground	Pulse generation	During transmission
CG	4	Chassis ground	Body ground	Below 1 Ω	Constant
SG	5	Signal ground	Body ground	Below 1 Ω	Constant
BAT	16	Battery positive	Body ground	11 to 14 V	Constant

If the result is not as specified, the DLC3 may have a malfunction. Repair or replace the harness and connector.

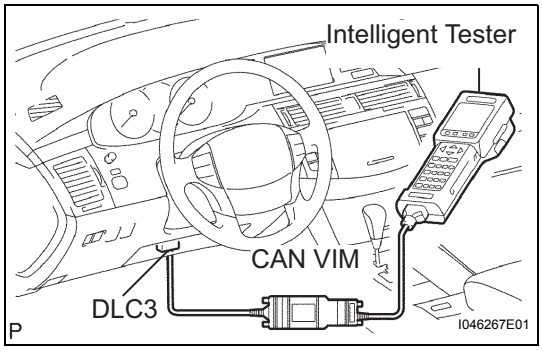

(b) Connect the cable of the intelligent tester (with CAN VIM) to the DLC3, turn the ignition switch ON and attempt to use the intelligent tester. If the screen displays UNABLE TO CONNECT TO VEHICLE, a problem may be on the vehicle side or tester side.

- If communication is normal when the tester is connected to another vehicle, inspect the DLC3 of the original vehicle.
- If communication is still impossible when the tester is connected to another vehicle, the problem may be in the tester itself. Consult the Service Department listed in the tester's instruction manual.

3. CHECK BATTERY VOLTAGE

(a) Check the battery voltage.

Voltage:

11 to 14 V

If the voltage is below 11 V, replace the battery before proceeding.

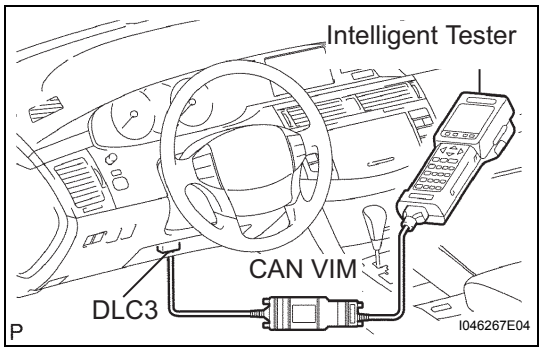

DTC CHECK / CLEAR

1. CHECK DTC (USING INTELLIGENT TESTER)

(a) Connect the intelligent tester to the Controller Area Network Vehicle Interface Module (CAN VIM). Then connect the CAN VIM to the DLC3.

(b) Turn the ignition switch ON.

(c) Read the DTCs by following the directions on the tester screen.
HINT:
Refer to the intelligent tester operator's manual for further details.

2. CHECK DTC (USING SST CHECK WIRE)

HINT:
Perform this procedure when a malfunction occurs in communication between ECM and transponder key ECU assembly, and communication line.

(a) Using SST check wire, connect terminals TC and CG of the DLC3.

(b) Turn the ignition switch to the ON position.
SST 09843-18040

(c) Read the DTCs from the blinking of the check engine indicator light.

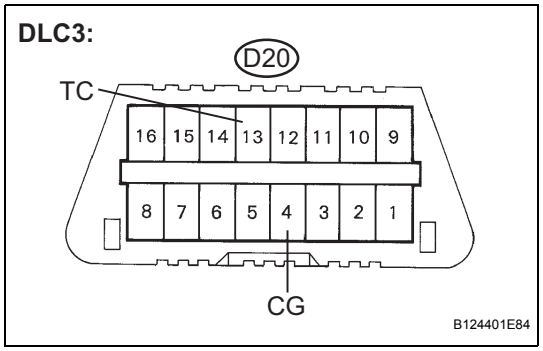

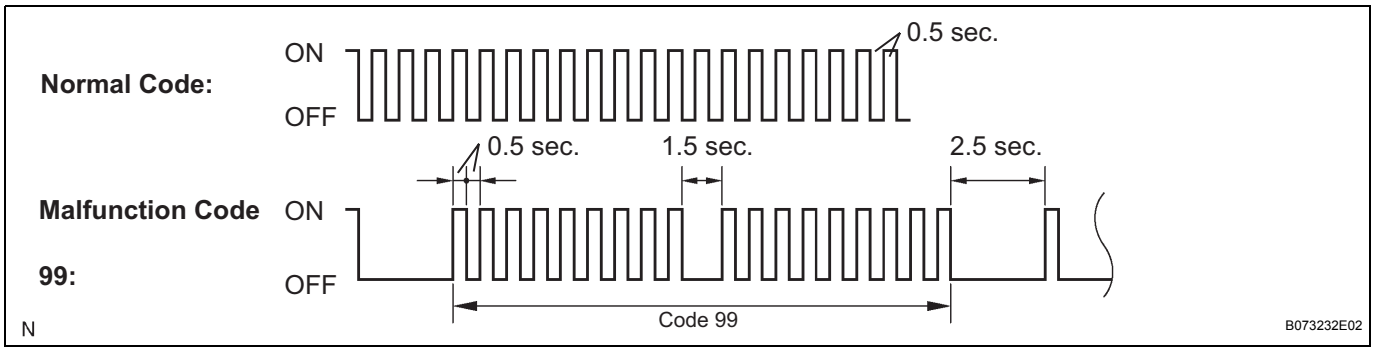

3. CLEAR DTC (USING INTELLIGENT TESTER)

(a) Connect the intelligent tester (with CAN VIM) to the DLC3.

(b) Turn the ignition switch ON.

(c) Erase the DTCs by following the directions on the tester screen.
HINT:
Refer to the intelligent tester operator's manual for further details.

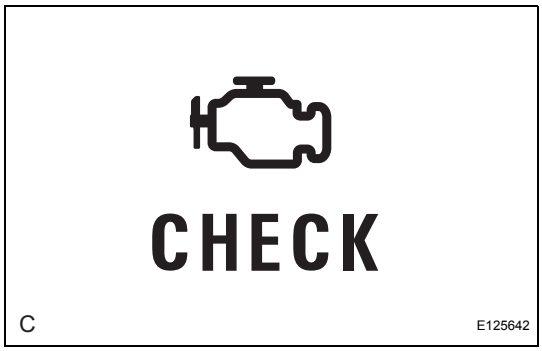

4. CLEAR DTC (USING SST CHECK WIRE)

(a) Turn the ignition switch OFF.

(b) Disconnect the battery terminals or the EFI No.1 fuse.

(c) Connect the battery terminals or the EFI No.1 fuse, and then turn the ignition switch to the ON position.

(d) Check that the normal code is indicated after connecting the fuse.

DATA LIST / ACTIVE TEST

1. DATA LIST

HINT:

Using the intelligent tester DATA LIST allows switch, sensor, actuator and other item values to be read without removing any parts. Reading the DATA LIST early in troubleshooting is one way to shorten labor time.

(a) Connect the intelligent tester to the Controller Area Network Vehicle Interface Module (CAN VIM). Then connect the CAN VIM to the DLC3.

(b) Turn the ignition switch ON.

(c) Read the DATA LIST according to the display on the tester.

Transponder key ECU:

Item	Measurement Item/Display (Range)	Normal Condition	Diagnostic Note
KEY SW	Unlock warning switch signal/ON or OFF	OFF: Key is in ignition key cylinder ON: No key is in ignition key cylinder	-
IG SW	Ignition switch signal/ON or OFF	OFF: Ignition switch is OFF or ACC position ON: Ignition switch is in the ON position	-
IMMOBILISER	Immobiliser system status/SET or UNSET	UNSET: Without key SET: Ignition switch ON	-
RESPONSE	Transponder chip data/NG or OK	NG: Data error OK: Data OK	-
FRAME	Transponder chip data/NG or OK	NG: Data error OK: Data OK	-
SERIAL NUMBER	Transponder chip data/NG or OK	NG: Data error OK: Data OK	-
ENCRYPT CODE	Transponder chip data/NG or OK	NG: Data error OK: Data OK	-
STATUS	Transponder chip data/NG or OK	NG: Data error OK: Data OK	-
BCC	Transponder chip signal/NG or OK	NG: Incorrect data sending OK: Correct data sending	-
SUB KEY	Sub-key code signal/NOMATCH or MATCH	NOMATCH: Unmatched sub-key code is sent MATCH: Sub-key code is sent	-
MASTER KEY	Master key code signal/ NOMATCH or MATCH	NOMATCH: Unmatched Master key code is sent MATCH: Master key code is sent	-
REGIST SUB CODE	Number of registered sub-key/ min. 0, max. 15	Number of registered sub-key	-
REGIST MAS CODE	Number of registered master key/ min. 0, max. 15	Number of registered master key	-
REG CODE SPACE	Memory space for key codes registration/NOT FUL or FULL	NOT FUL: Possible to register more key codes FULL: Cannot register any more key codes	-
+B	Power source/BREAK or NORMAL	BREAK: Power source open Normal: Power source normal	-
ANTENNA COIL	Transponder key amplifier coil condition/NORMAL or FAIL	Normal: Antenna coil is normal FAIL: Antenna coil is malfunctioning	-
G-CODE SUPPORT	SUPPORT or NOT SUP	-	*1
G-CODE DECISION	YES or NO	-	*2

*1: Diagnostic Note

- If the engine does not start using the registered key while the display on the intelligent tester shows "SUPPORT", there may be a problem with the ECM and the transponder key ECU.

- If the engine does not start using the registered key while the display on the intelligent tester shows "NON SUP", there may be a problem with the transponder key ECU.

*2: Diagnostic Note

- YES indicates that the registration of the ECU communication ID for the ECM and the transponder key ECU has been completed.
- NO indicates that the registration of the ECU communication ID for the ECM and the transponder key ECU has not been completed.

2. ACTIVE TEST

HINT:

Performing the intelligent tester ACTIVE TEST allows relay, VSV, actuator and other items to be operated without removing any parts. Performing the ACTIVE TEST early in troubleshooting is one way to shorten the labor time. THE DATA LIST can be displayed during the ACTIVE TEST.

(a) Connect the intelligent tester (with CAN VIM) to the DLC3.
(b) Turn the ignition switch ON.
(c) Perform the ACTIVE TEST according to the display on the tester.

Transponder key ECU:

Item	Tester Details	Diagnostic Note
SECURITY INDIC	Turn security indicator ON/OFF	-

DIAGNOSTIC TROUBLE CODE CHART

1. TRANSPONDER KEY ECU DTC CHART

DTC No.	Detection Item	Trouble Area	See page
B2780	Push Switch / Key Unlock Warning Switch Malfunction	1. Un-lock warning switch assembly 2. Wire harness 3. Transponder key ECU assembly	EI-22
B2784	Antenna Coil Open / Short	1. Wire harness 2. Transponder key amplifier 3. Transponder key ECU assembly	EI-25
B2793	Transponder Chip Malfunction	Key	EI-27
B2794	Unmatched Encryption Code	Key	EI-28
B2795	Unmatched Key Code	Key	EI-29
B2796	No Communication in Immobiliser System	1. Key 2. Transponder key amplifier 3. Wire harness 4. Transponder key ECU assembly	EI-30
B2797	Communication Malfunction No. 1	1. Key 2. Wire harness 3. Transponder key amplifier 4. Transponder key ECU assembly	EI-33
B2798	Communication Malfunction No. 2	Key	EI-30

2. ECM DTC CHART

DTC No.	Detection Item	Trouble Area	See page
B2799/99	Engine Immobiliser System Malfunction	1. Wire harness 2. ECM	EI-36

NOTICE:
The DTCs for the immobiliser system are specified above. If other codes are output, check the DTCs chart for the engine control system.

DTC	B2780	Push Switch / Key Unlock Warning Switch Malfunction

DESCRIPTION

This DTC will be output if the transponder key ECU assembly does not detect that the un-lock warning switch is ON even when the ignition switch is ON. Under normal conditions, the un-lock warning switch assembly is ON when the ignition switch is ON.

DTC No.	DTC Detection Condition	Trouble Area
B2780	Un-lock warning switch ON is not detected when ignition switch is ON	• Un-lock warning switch assembly • Wire harness • Transponder key ECU assembly

WIRING DIAGRAM

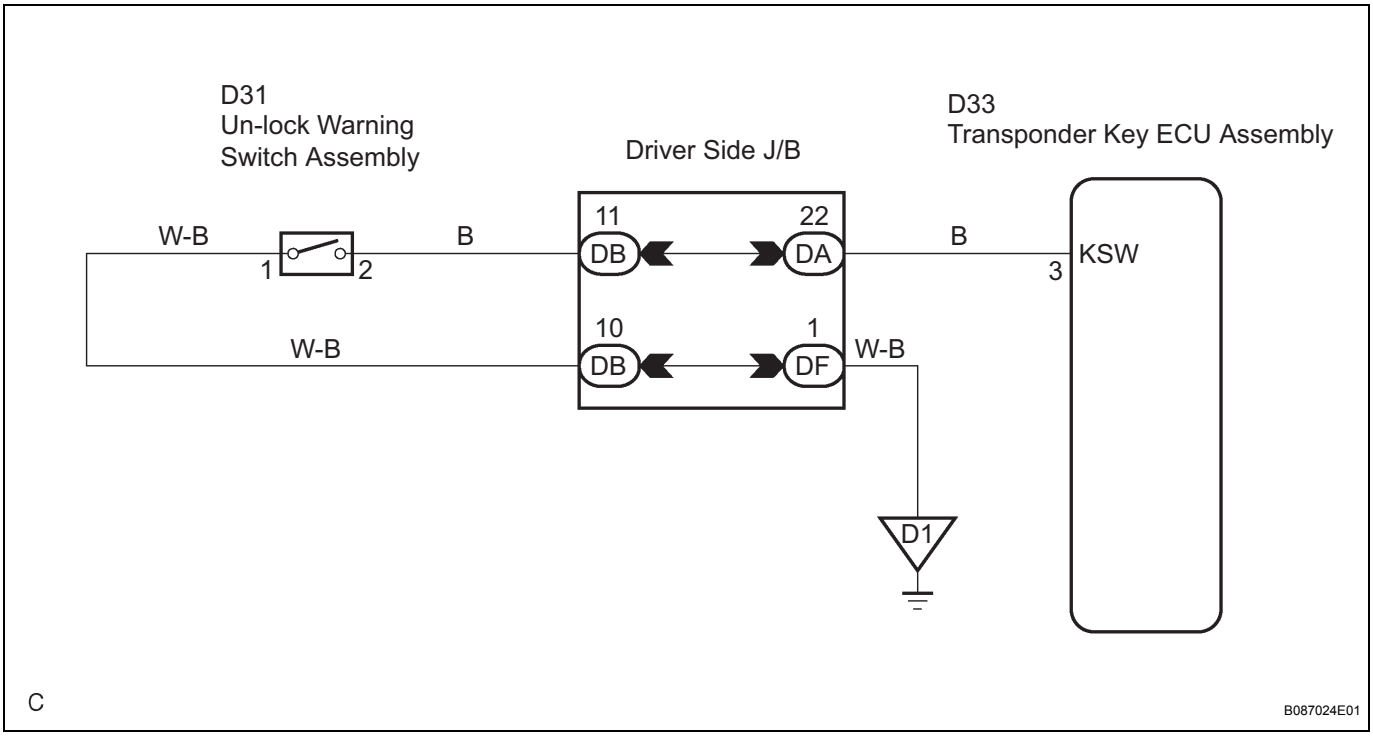

INSPECTION PROCEDURE

1	READ VALUE OF INTELLIGENT TESTER

(a) Connect the intelligent tester to the Controller Area Network Vehicle Interface Module (CAN VIM). Then connect the CAN VIM to the DLC3.
(b) Turn the ignition switch ON with a key that cannot start the engine.

(c) Read the DATA LIST according to the display on the tester.

Transponder key ECU:

Item	Measurement Item/Display (Range)	Normal Condition	Diagnostic Note
KEY SW	Un-lock warning switch signal/ON or OFF	OFF: Key is in ignition key cylinder ON: No key is in ignition key cylinder	-

OK:
"ON" (Key is in ignition key cylinder) appears on the screen.

EI

NG → **Go to step 2**

OK →

REPLACE TRANSPONDER KEY ECU ASSEMBLY

2 INSPECT UN-LOCK WARNING SWITCH ASSEMBLY

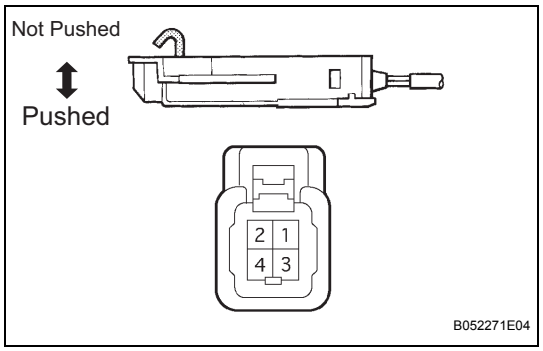

(a) Remove the un-lock warning switch assembly.
(b) Measure the resistance according to the value(s) in the table below.
Resistance

Tester Connection	Condition	Specified Condition
D31-1 - D31-2	Pushed	Below 1 Ω
D31-1 - D31-2	Not pushed	10 kΩ or higher

NG → **REPLACE UN-LOCK WARNING SWITCH ASSEMBLY**

OK →

3 CHECK HARNESS AND CONNECTOR (UN-LOCK WARNING SWITCH ASSEMBLY - BODY GROUND)

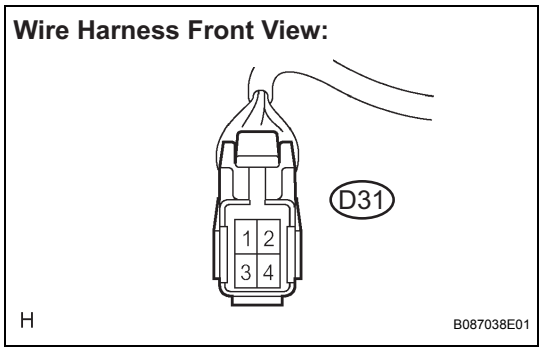

(a) Disconnect the D31 switch connector.
(b) Measure the resistance according to the value(s) in the table below.
Resistance

Tester Connection	Condition	Specified Condition
D31-1 - Body ground	Always	Below 1 Ω

NG → **REPAIR OR REPLACE HARNESS OR CONNECTOR**

OK →

4	CHECK HARNESS AND CONNECTOR (TRANSPONDER KEY ECU ASSEMBLY - UN-LOCK WARNING SWITCH)

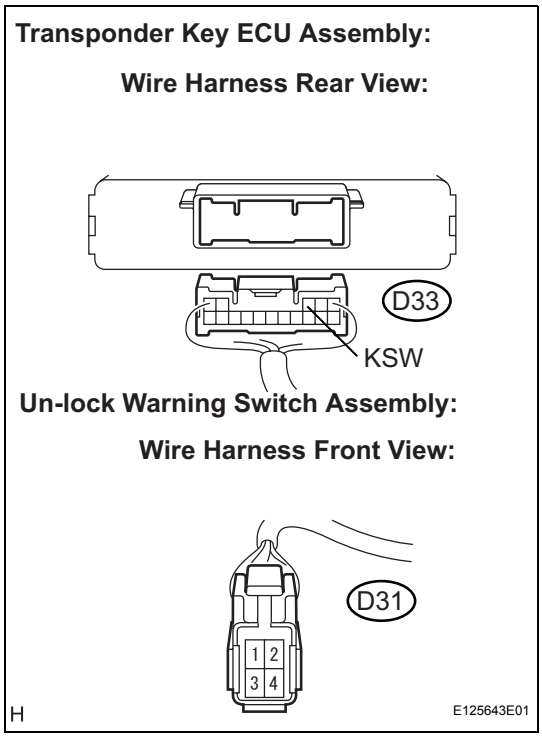

(a) Disconnect the D33 ECU and D31 switch connectors.
(b) Measure the resistance according to the value(s) in the table below.

Resistance

Tester Connection	Condition	Specified Condition
D33-3 (KSW) - D31-2	Always	Below 1 Ω
D31-2 - Body ground	Always	10 kΩ or higher

NG → **REPAIR OR REPLACE HARNESS OR CONNECTOR**

OK

REPLACE TRANSPONDER KEY ECU ASSEMBLY

DTC	B2784	Antenna Coil Open / Short

DESCRIPTION

The transponder key coil is built into the transponder key amplifier and receives a key code signal from the transponder chip in the key. This signal is amplified by the amplifier, then it is output to the transponder key ECU assembly.

DTC No.	DTC Detection Condition	Trouble Area
B2784	Antenna coil is open / short	• Wire harness • Transponder key amplifier • Transponder key ECU assembly

EI

WIRING DIAGRAM

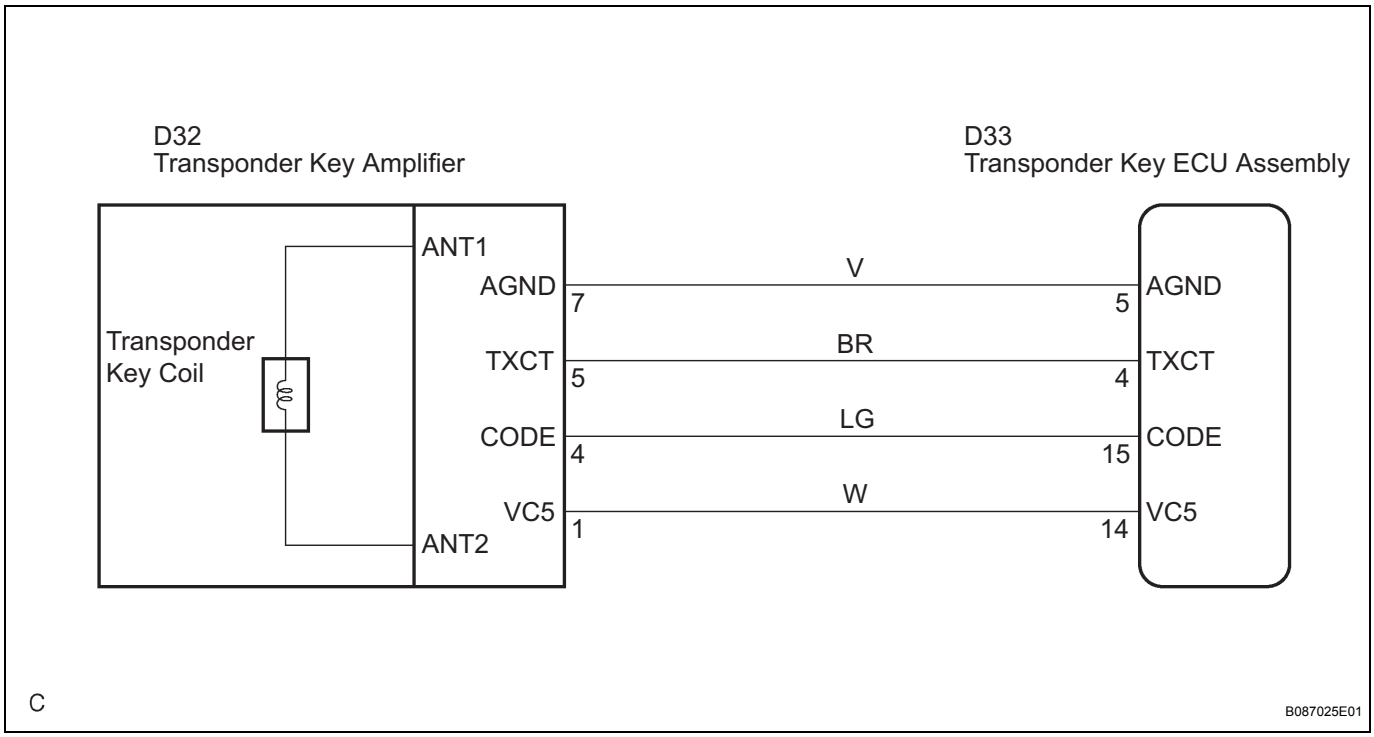

INSPECTION PROCEDURE

1	READ VALUE OF INTELLIGENT TESTER

(a) Connect the intelligent tester to the DLC3.
(b) Turn the ignition switch ON with a key that does not start the engine.
(c) Select the item "ANTENNA COIL" on the intelligent tester.

Transponder key ECU:

Item	Measurement Item/Display (Range)	Normal Condition	Diagnostic Note
ANTENNA COIL	Antenna coil condition/NORMAL or FAIL	Normal: Antenna coil is normal FAIL: Antenna coil is abnormal	-

OK:

"NORMAL" (Antenna coil is normal) appears on the screen.

NG → Go to step 2

OK

REPLACE TRANSPONDER KEY ECU ASSEMBLY

EI

2 CHECK HARNESS AND CONNECTOR (TRANSPONDER KEY ECU ASSEMBLY - TRANSPONDER KEY AMPLIFIER)

Transponder Key ECU Assembly:

Wire Harness Rear View:

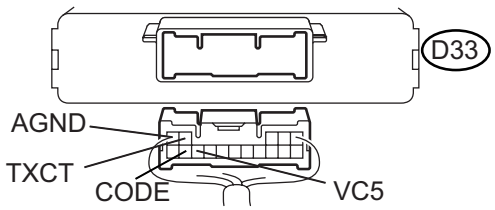

Transpoder Key Amplifier:

Wire Harness Front View:

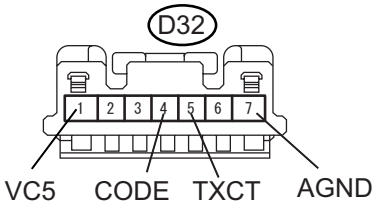

H E125644E01

(a) Disconnect the D33 ECU and D32 amplifier connectors.
(b) Measure the resistance according to the value(s) in the table below.

Resistance

Tester Connection	Condition	Specified Condition
D33-4 (TXCT) - D32-5 (TXCT)	Always	Below 1 Ω
D33-5 (AGND) - D32-7 (AGND)	Always	Below 1 Ω
D33-14 (VC5) - D32-1 (VC5)	Always	Below 1 Ω
D33-15 (CODE) - D32-4 (CODE)	Always	Below 1 Ω
D33-4 (TXCT) - Body ground	Always	10 kΩ or higher
D33-5 (AGND) - Body ground	Always	10 kΩ or higher
D33-14 (VC5) - Body ground	Always	10 kΩ or higher
D33-15 (CODE) - Body ground	Always	10 kΩ or higher

NG → REPAIR OR REPLACE HARNESS OR CONNECTOR

OK

REPLACE TRANSPONDER KEY AMPLIFIER

DTC	B2793	Transponder Chip Malfunction

DESCRIPTION

This DTC is output when: 1) during the key code registration, a key malfunction occurs; or 2) the key code was unable to be registered properly. Follow the inspection procedure below.

DTC No.	DTC Detection Condition	Trouble Area
B2793	Transponder chip malfunction	Key

INSPECTION PROCEDURE

1	RE-REGISTER KEY

(a) Delete the DTC (See page EI-18).
(b) Re-register the key (See page EI-6), and check that the engine starts with the key.
OK:
Engine starts.

NG → **REPLACE KEY**

OK ↓

END

DTC	B2794	Unmatched Encryption Code

DESCRIPTION

This DTC is output when a key with an incomplete key code is inserted into the ignition key cylinder.

DTC No.	DTC Detection Condition	Trouble Area
B2794	Key with incomplete key code is inserted	Key

INSPECTION PROCEDURE

1	REPLACE KEY

NEXT

END

DTC	B2795	Unmatched Key Code

DESCRIPTION

This DTC is output when a key with a key code that has not been registered in the ECU is inserted into the ignition key cylinder.

DTC No.	DTC Detection Condition	Trouble Area
B2795	Key with unregistered key code is inserted	Key

INSPECTION PROCEDURE

1	RE-REGISTER KEY

(a) Delete the DTC (See page EI-18).
(b) Re-register the key (See page EI-6), and check that the engine starts with the key.
OK:
Engine starts.

NG → **REPLACE KEY**

OK ↓

END

DTC	B2796	No Communication in Immobiliser System

DTC	B2798	Communication Malfunction No. 2

DESCRIPTION

This DTC is output when a key that does not have a transponder chip is inserted into the ignition key cylinder or if communication between the key and transponder key ECU assembly is not possible.

EI

DTC No.	DTC Detection Condition	Trouble Area
B2796	No communication	• Key • Wire harness • Transponder key amplifier • Transponder key ECU assembly
B2798	Communication error	Key

WIRING DIAGRAM

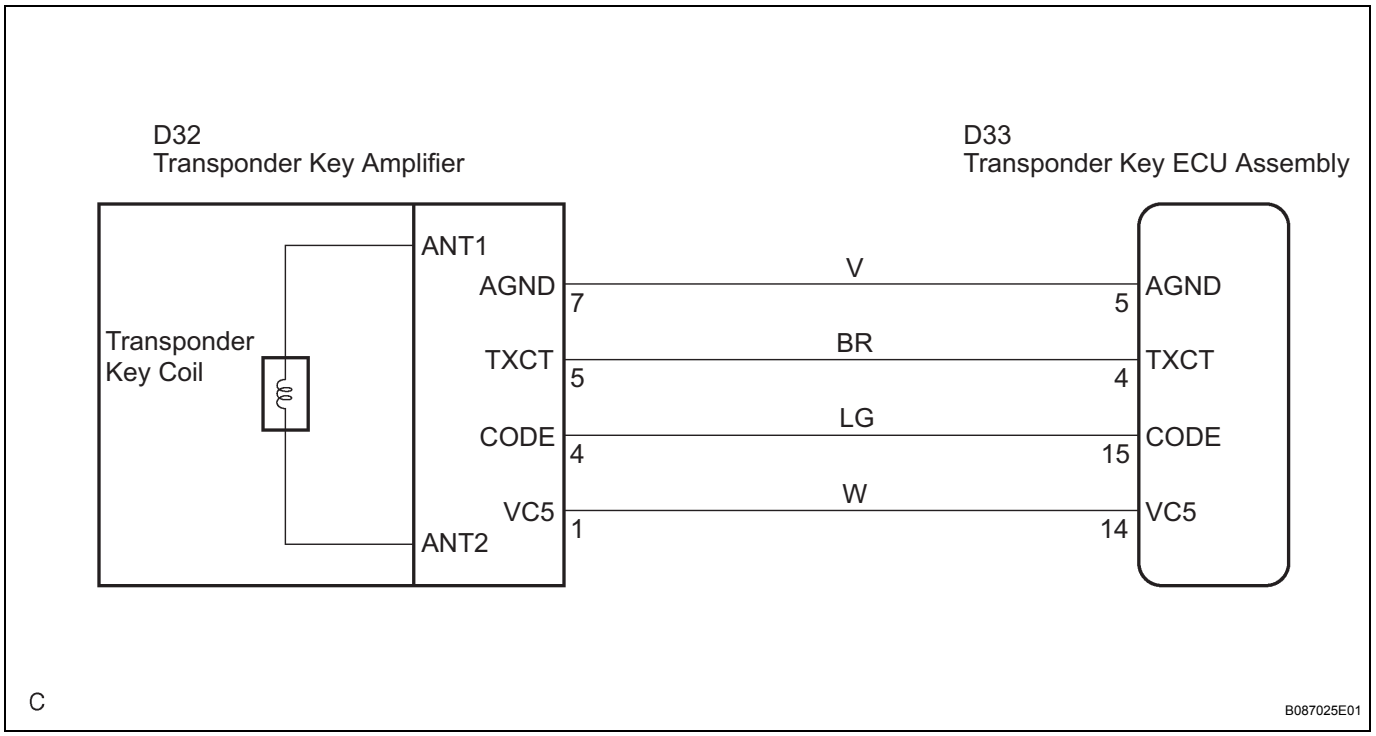

INSPECTION PROCEDURE

1	READ VALUE OF INTELLIGENT TESTER

(a) Connect the intelligent tester to the Controller Area Network Vehicle Interface Module (CAN VIM). Then connect the CAN VIM to the DLC3.
(b) Turn the ignition switch ON with a key that cannot start the engine.

(c) Read the DATA LIST according to the display on the tester.

Transponder key ECU:

Item	Measurement Item/Display (Range)	Normal Condition	Diagnostic Note
IMMOBILISER	Immobiliser system status/SET or UNSET	UNSET: Without key SET: Ignition switch ON	-

OK:
"SET" (Ignition switch ON) appears on the screen.

NG → **Go to step 2**

OK

REPLACE TRANSPONDER KEY ECU ASSEMBLY

2 **CHECK KEYS**

(a) Check if the engine starts with the vehicle's other keys.
OK:
Engine starts.

NG → **Go to step 3**

OK

RE-REGISTER OR REPLACE KEY

3	CHECK HARNESS AND CONNECTOR (TRANSPONDER KEY ECU ASSEMBLY - TRANSPONDER KEY AMPLIFIER)

Transponder Key ECU Assembly:

Wire Harness Rear View:

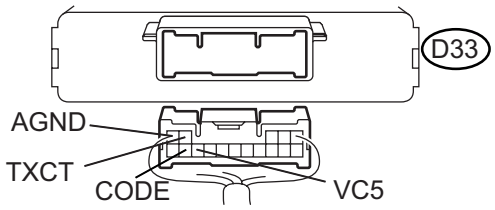

Transpoder Key Amplifier:

Wire Harness Front View:

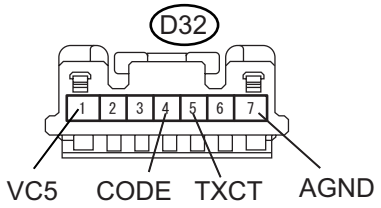

H E125644E02

(a) Disconnect the D33 ECU and D32 amplifier connectors.
(b) Measure the resistance according to the value(s) in the table below.

Resistance

Tester Connection	Condition	Specified Condition
D33-4 (TXCT) - D32-5 (TXCT)	Always	Below 1 Ω
D33-5 (AGND) - D32-7 (AGND)	Always	Below 1 Ω
D33-14 (VC5) - D32-1 (VC5)	Always	Below 1 Ω
D33-15 (CODE) - D32-4 (CODE)	Always	Below 1 Ω
D33-4 (TXCT) - Body ground	Always	10 kΩ or higher
D33-5 (AGND) - Body ground	Always	10 kΩ or higher
D33-14 (VC5) - Body ground	Always	10 kΩ or higher
D33-15 (CODE) - Body ground	Always	10 kΩ or higher

NG → **REPAIR OR REPLACE HARNESS OR CONNECTOR**

OK

4	CHECK TRANSPONDER KEY AMPLIFIER

(a) After replacing the transponder key amplifier with a normally functioning amplifier, check that the engine starts.

OK:

Engine starts.

NG → **REPLACE TRANSPONDER KEY ECU ASSEMBLY**

OK

END

DTC	B2797	Communication Malfunction No. 1

DESCRIPTION

This DTC is output when a communication error occurs between the transponder key amplifier and transponder key ECU assembly. Some possible reasons for the communication error are: 1) 2 or more ignition keys are positioned too close to each other, or 2) noise is occurring in the communication line. Follow the inspection procedure below.

DTC No.	DTC Detection Condition	Trouble Area
B2797	Keys are positioned too close to each other, or noise occurred in communication line	• Key • Wire harness • Transponder key amplifier • Transponder key ECU assembly

EI

WIRING DIAGRAM



INSPECTION PROCEDURE

1	CHECK KEYS

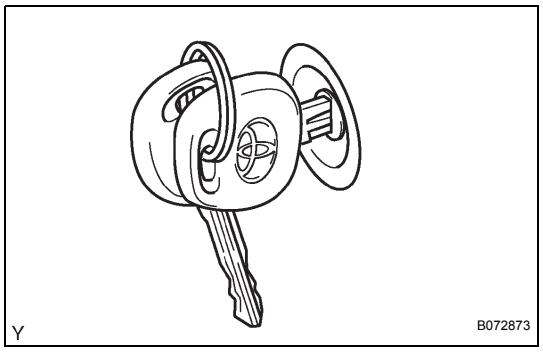

(a) Check if the ignition key being used is near other ignition keys, as shown in the illustration. Also, check if the key ring is in contact with the key grip.

Result

Condition	Proceed to
Key is near other keys and / or key rings is in contact with key grip.	**A**
Key is not near other keys and / or key ring is not in contact with the key grip.	**B**

B → Go to step 3

A

2 CHECK DTC OUTPUT

(a) Separate the keys from each other. Or, remove the key ring.
(b) Delete the DTC (See page EI-18).
(c) Insert a key into the ignition cylinder. Remove it. Repeat for all the other keys.
(d) Check that no code output.

NG → Go to step 3

OK

END

3 CHECK TRANSPONDER KEY ECU ASSEMBLY

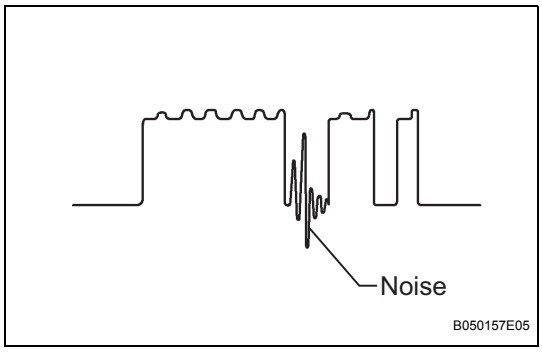

(a) Using an oscilloscope or the intelligent tester, check the waveform between the terminals of D32 amplifier connector and D33 ECU connector. The waveform should be similar to the illustration on the left.
Result

Tester Condition	Specified Condition
D33-15 (CODE) - D32-4 (CODE)	No noise is present

Tool Setting	Condition
10 V/DIV., 20 ms/DIV.	Ignition switch OFF → ON

NG → FIND CAUSE OF NOISE AND REMOVE IT

OK

4	CHECK HARNESS OR CONNECTOR (TRANSPONDER KEY ECU ASSEMBLY - TRANSPONDER KEY AMPLIFIER)

Transponder Key ECU Assembly:

Wire Harness Rear View:

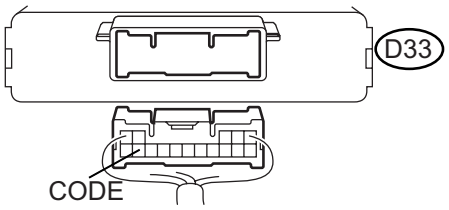

Transpoder Key Amplifier:

Wire Harness Front View:

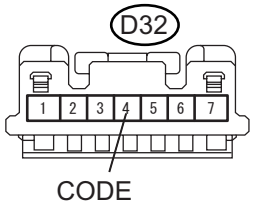

H E125644E04

(a) Disconnect the D33 ECU and D22 amplifier connectors.
(b) Measure the resistance according to the value(s) in the table below.

Resistance

Tester Connection	Condition	Specified Condition
D33-15 (CODE) - D32-4 (CODE)	Always	Below 1 Ω
D33-15 (CODE) - Body ground	Always	10 kΩ or higher

NG → **REPAIR OR REPLACE HARNESS OR CONNECTOR**

OK

5	CHECK TRANSPONDER KEY AMPLIFIER

(a) After replacing the transponder key amplifier with a normally functioning amplifier, check that the engine starts.

OK:

Engine starts.

NG → **REPLACE TRANSPONDER KEY ECU ASSEMBLY**

OK

END

DTC	B2799/99	Engine Immobiliser System Malfunction

DESCRIPTION

This DTC is output when: 1) the ECM detects errors in its own communications with the transponder key ECU assembly; 2) the ECM detects errors in the communication lines; and 3) the ECU communication ID between the transponder key ECU assembly and the ECM is different and an engine start is attempted. Before troubleshooting for this DTC, make sure no transponder key ECU assembly DTCs are present. If the transponder key ECU assembly has a key code related DTC, repair it first.

EI

DTC No.	DTC Detection Condition	Trouble Area
B2799	• Error in communication between ECM and transponder key ECU assembly, and in communication line • Communication ID is different during communication with transponder key ECU assembly	• Wire harness • ECM

WIRING DIAGRAM

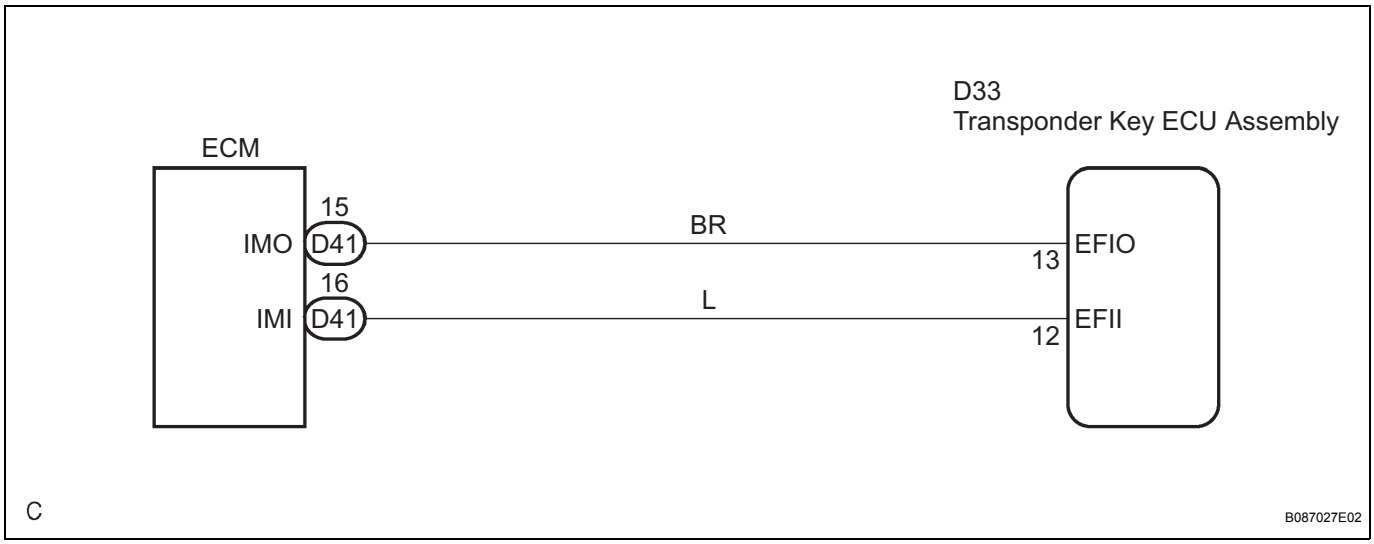

INSPECTION PROCEDURE

1	ECU COMMUNICATION ID REGISTRATION

(a) Re-register the ECU communication ID (See page EI-6).
(b) Check that the engine starts.
OK:
Engine starts.

NG → **Go to step 2**

OK

END

2	CHECK HARNESS OR CONNECTOR (TRANSPONDER KEY ECU ASSEMBLY - ECM)

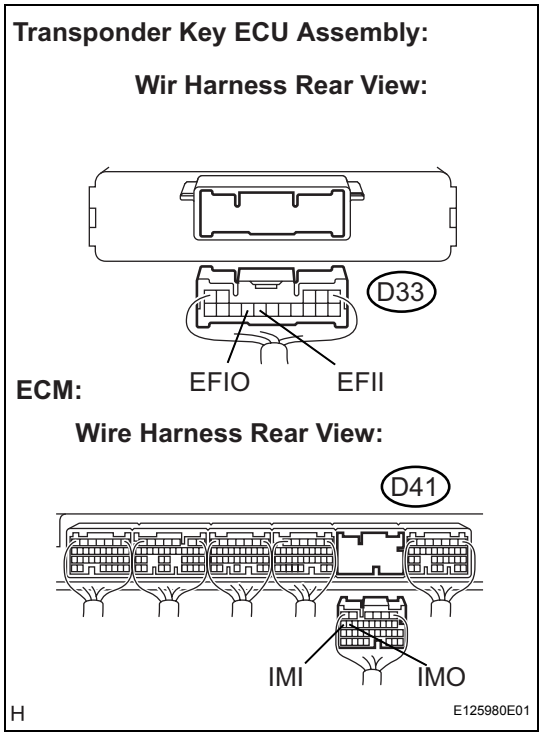

(a) Disconnect the D33 ECU and D41 ECM connectors.
(b) Measure the resistance according to the value(s) in the table below.

Resistance

Tester Connection	Condition	Specified Condition
D33-12 (EFII) - D41-16 (IMI)	Always	Below 1 Ω
D33-13 (EFIO) - D41-15 (IMO)	Always	Below 1 Ω
D33-12 (EFII) - Body ground	Always	10 kΩ or higher
D33-13 (EFIO) - Body ground	Always	10 kΩ or higher

EI

NG → **REPAIR OR REPLACE HARNESS OR CONNECTOR**

OK

3	CHECK TRANSPONDER KEY ECU ASSEMBLY

(a) After replacing the transponder key ECU assembly with a normally functioning transponder key ECU assembly, check that the engine starts.

OK:

Engine starts.

NG → **REPLACE ECM**

OK

END

Security Indicator Light Circuit

DESCRIPTION

When the transponder key is registered, the transponder key ECU assembly outputs the key registration condition by lighting up, blinking or turning off the security indicator.

WIRING DIAGRAM

EI

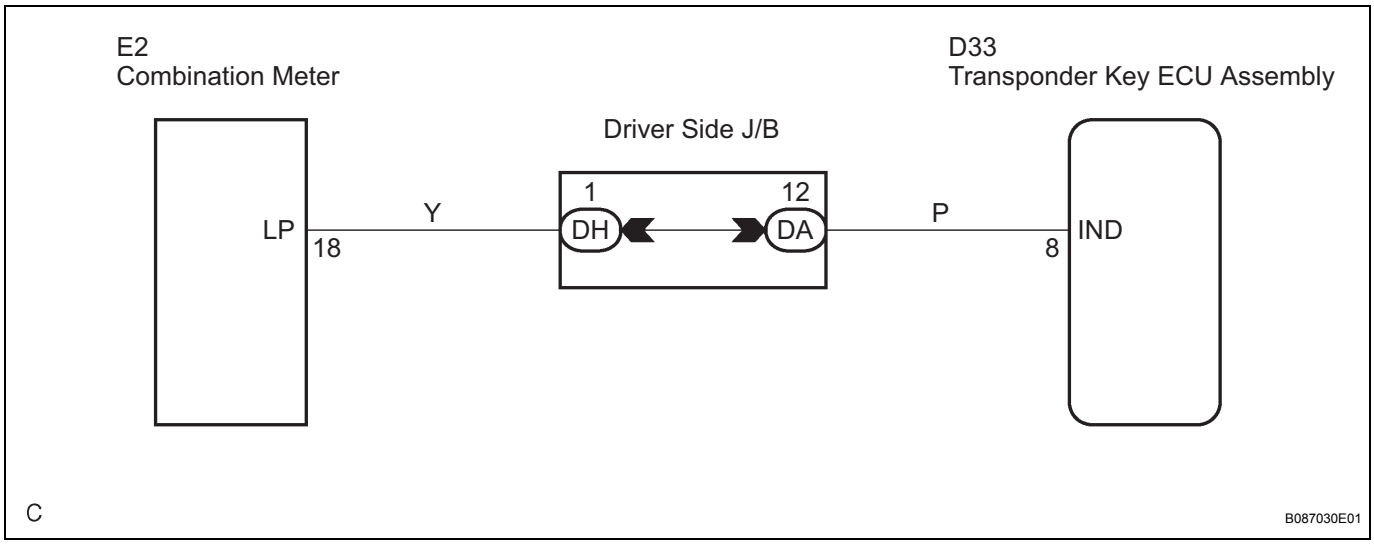

INSPECTION PROCEDURE

1	PERFORM ACTIVE TEST BY INTELLIGENT TESTER

(a) Connect the intelligent tester (with CAN VIM) to the DLC3.
(b) Turn the ignition switch ON.
(c) Perform the ACTIVE TEST according to the display on the tester.

Transponder key ECU:

Item	Tester Details	Diagnostic Note
SECURITY INDIC	Turn security indicator ON/OFF	-

NG → **Go to step 2**

OK

PROCEED TO NEXT CIRCUIT INSPECTION SHOWN IN PROBLEM SYMPTOMS TABLE

2 CHECK HARNESS AND CONNECTOR (TRANSPONDER KEY ECU ASSEMBLY - COMBINATION METER ASSEMBLY)

Transponder Key ECU Assembly:

Wire Harness Rear View:

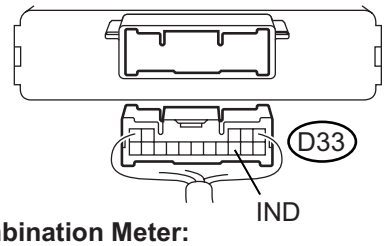

Combination Meter:

Wire Harness Rear View:

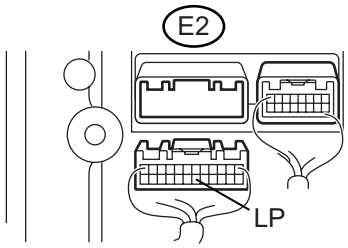

H E125981E01

(a) Disconnect the D33 ECU and E2 combination meter connectors.
(b) Measure the resistance according to the value(s) in the table below.

Resistance

Tester Connection	Condition	Specified Condition
D33-8 (IND) - E2-18 (LP)	Always	Below 1 Ω
D33-8 (IND) - Body ground	Always	10 kΩ or higher

NG → **REPAIR OR REPLACE HARNESS OR CONNECTOR**

OK

3 INSPECT TRANSPONDER KEY ECU ASSEMBLY

Wire Harness Rear View:

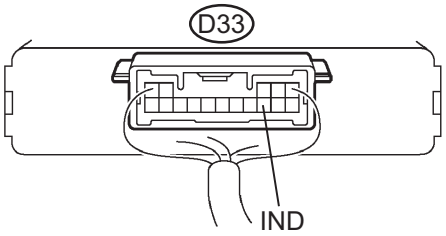

H B087039E03

(a) Reconnect the D33 ECU and E2 combination meter connectors.
(b) Measure the voltage according to the value(s) in the table below.

Voltage

Tester Connection	Condition	Specified Condition
D33-8 (IND) - Body ground	Security indicator light comes on	10 to 14 V
D33-8 (IND) - Body ground	Security indicator light goes off	Below 1 V

NG → **REPLACE TRANSPONDER KEY ECU ASSEMBLY**

OK

REPAIR OR REPLACE COMBINATION METER ASSEMBLY

Door Courtesy Switch Circuit

DESCRIPTION

When an additional transponder key is registered, the transponder key ECU assembly detects the front door courtesy light switch open / close condition, and enters the key registration mode.

WIRING DIAGRAM

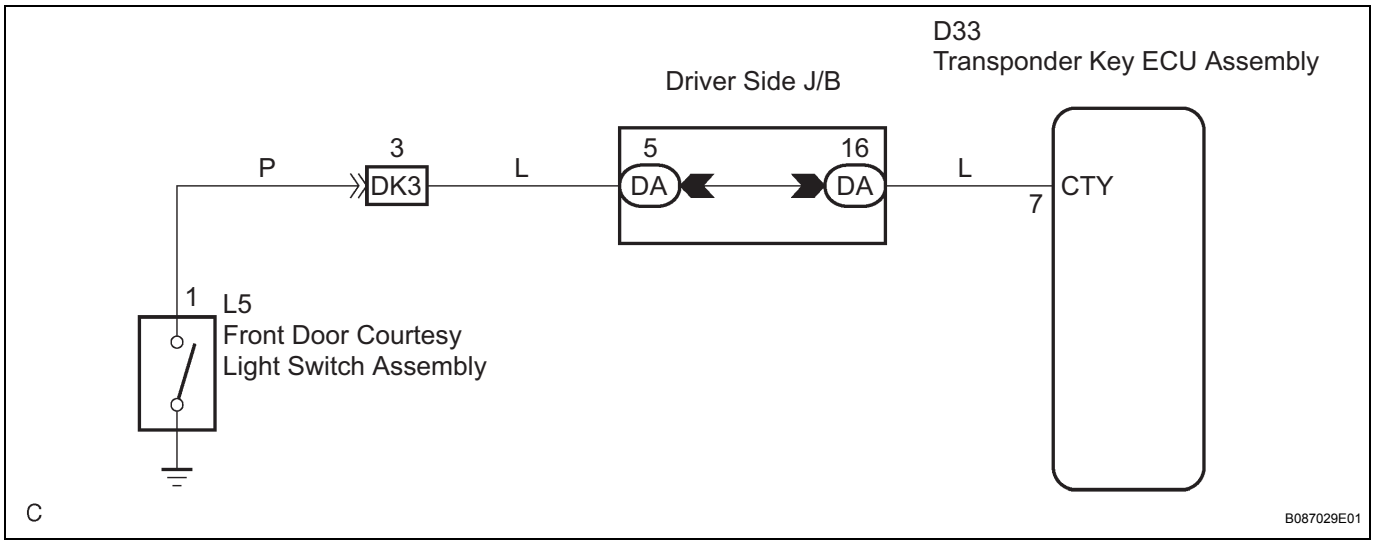

INSPECTION PROCEDURE

1	INSPECT FRONT DOOR COURTESY LIGHT SWITCH ASSEMBLY

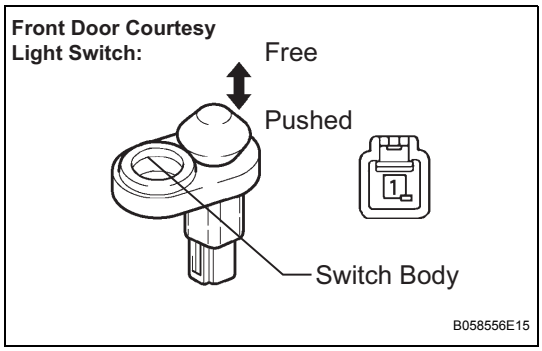

(a) Remove the driver side front door courtesy light switch.
(b) Measure the resistance according to the value(s) in the table below.

Resistance

Tester Connection	Condition	Specified Condition
1 - Switch body	Switch pushed	10 kΩ or higher
1 - Switch body	Switch free	Below 1 Ω

NG → **REPLACE FRONT DOOR COURTESY LIGHT SWITCH ASSEMBLY**

OK

2	CHECK HARNESS AND CONNECTOR (FRONT DOOR COURTESY LIGHT SWITCH CIRCUIT)

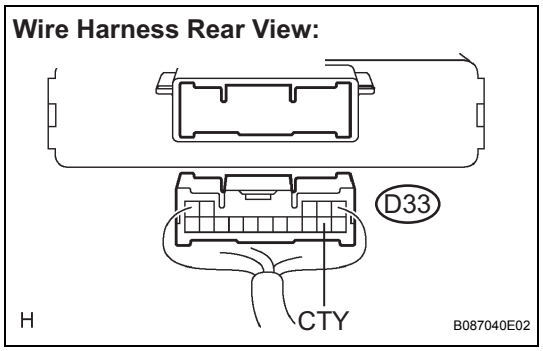

(a) Install the driver side front door courtesy light switch.
(b) Disconnect the D33 ECU connector.
(c) Measure the resistance according to the value(s) in the table below.

Resistance

Tester Connection	Condition	Specified Condition
D33-7 (CTY) - Body ground	Courtesy switch pushed	10 kΩ or higher
D33-7 (CTY) - Body ground	Courtesy switch free	Below 1 Ω

NG → **REPAIR OR REPLACE HARNESS OR CONNECTOR**

OK

PROCEED TO NEXT CIRCUIT INSPECTION SHOWN IN PROBLEM SYMPTOMS TABLE

EI

ECU Power Source Circuit

DESCRIPTION

This circuit provides power to operate the transponder key ECU assembly.

WIRING DIAGRAM

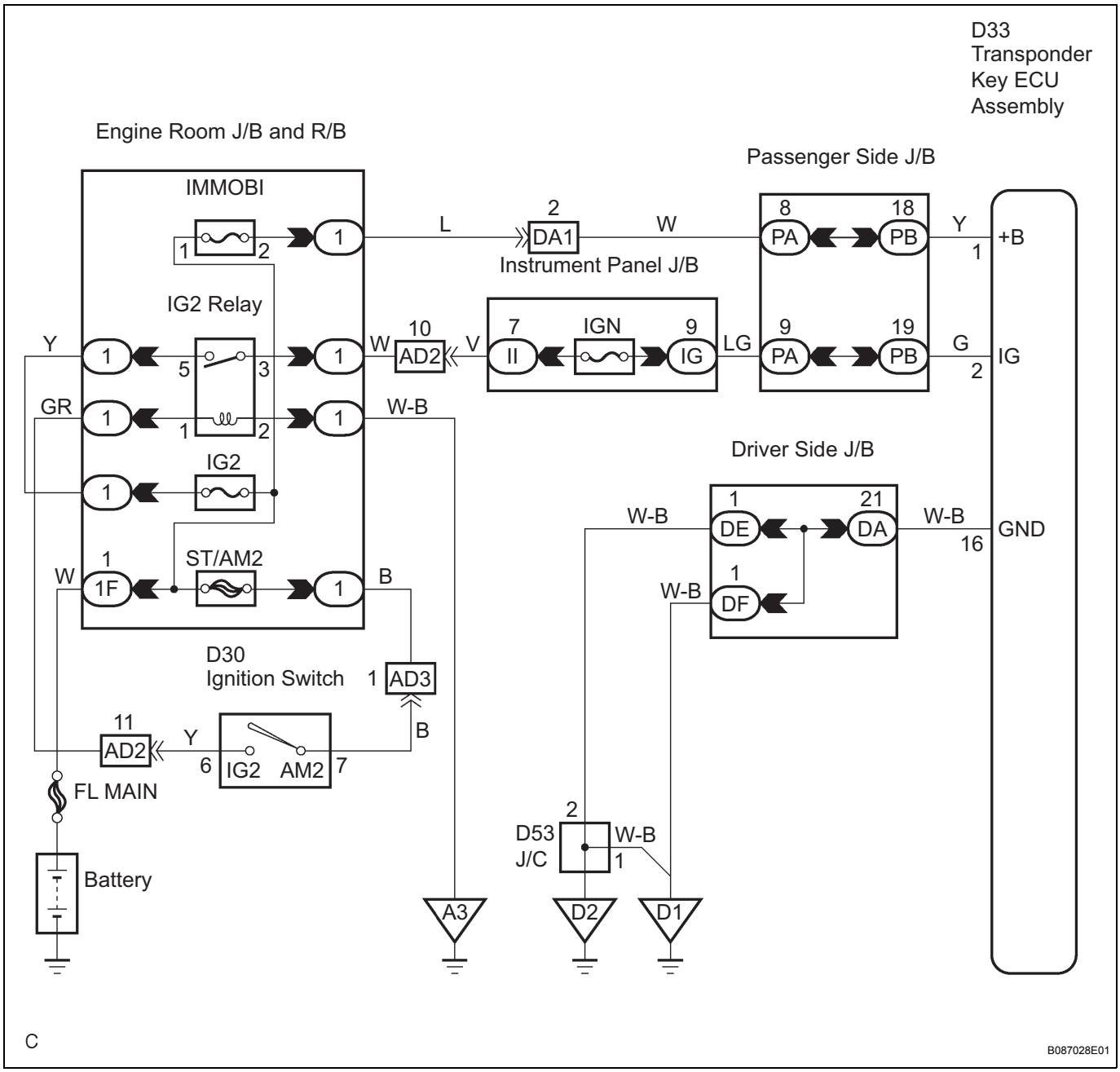

INSPECTION PROCEDURE

1 INSPECT TRANSPONDER KEY ECU ASSEMBLY

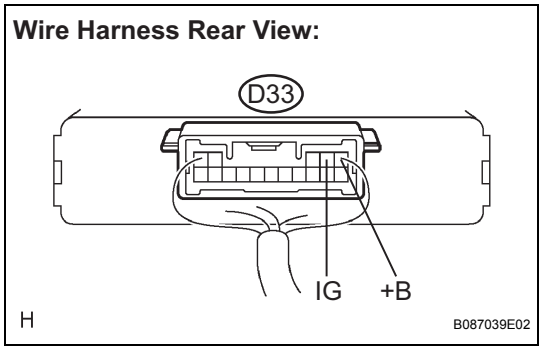

(a) Measure the voltage according to the value(s) in the table below.

Voltage

Tester Connection	Condition	Specified Condition
D33-1 (+B) - D33-16 (GND)	Always	10 to 14 V
D33-2 (IG) - D33-16 (GND)	Ignition switch OFF	Below 1 V
D33-2 (IG) - D33-16 (GND)	Ignition switch ON	10 to 14 V

EI

NG → Go to step 2

OK

PROCEED TO NEXT CIRCUIT INSPECTION SHOWN IN PROBLEM SYMPTOMS TABLE

2 CHECK HARNESS AND CONNECTOR (GROUND CIRCUIT)

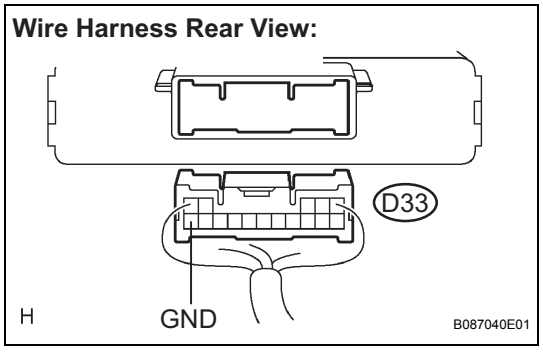

(a) Disconnect the D33 ECU connector.
(b) Measure the resistance according to the value(s) in the table below.

Resistance

Tester Connection	Condition	Specified Condition
D33-16 (GND) - Body ground	Always	Below 1 Ω

NG → REPAIR OR REPLACE HARNESS OR CONNECTOR

OK

REPAIR OR REPLACE HARNESS OR CONNECTOR (POWER SOURCE CIRCUIT)

Diagnosis Circuit

DESCRIPTION

This circuit is used to read the DTCs that are output from the transponder key ECU assembly with the intelligent tester.
HINT:
There are 2 DTCs that are output from the ECM:

- DTC B2799 can be read with the intelligent tester and DTC 99 can be read with the check wire.
- These DTCs are output to the same circuit as "SFI system" and "cruise control system" (For detailed inspection procedure, (See page CC-8).
- When each warning light keeps blinking, a ground short in the wiring of terminal TC of the DLC3 or an internal ground short in each ECU is suspected.

EI

WIRING DIAGRAM

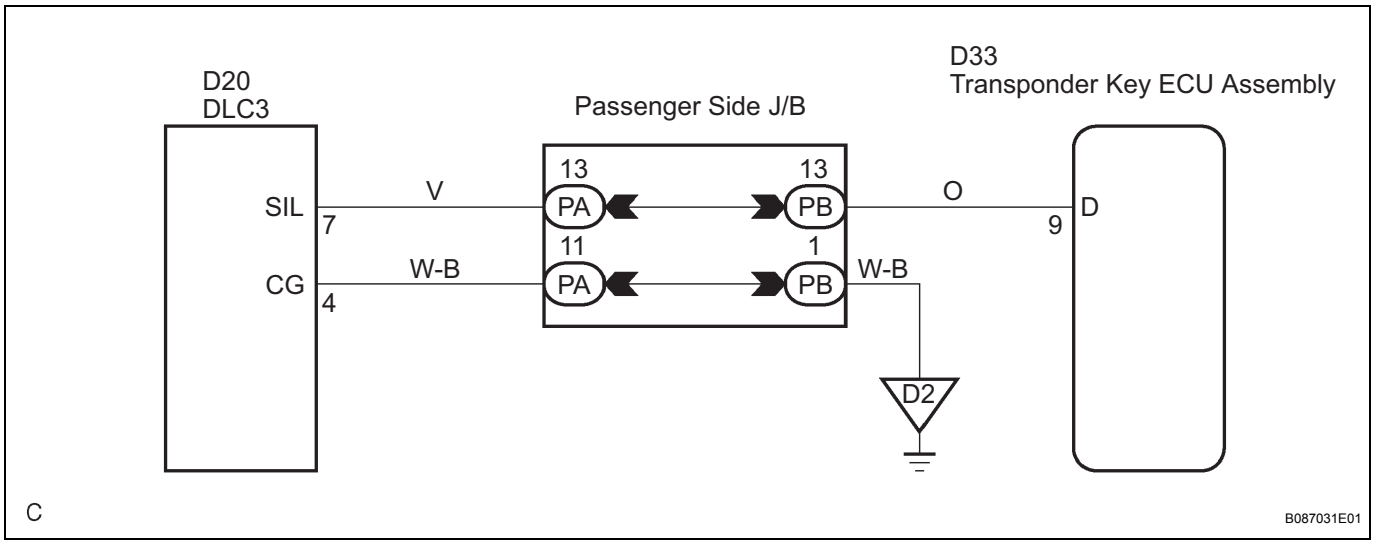

INSPECTION PROCEDURE

1 CHECK HARNESS AND CONNECTOR (TRANSPONDER KEY ECU ASSEMBLY - DLC3)

Transponder Key ECU Assembly:

Wire Harness Rear View:

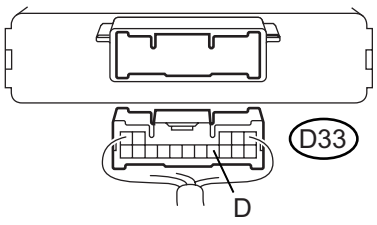

DLC3:

Connector Front View:

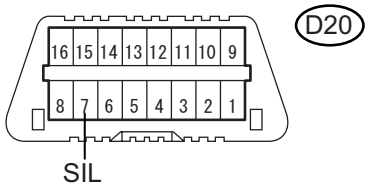

H E125982E01

(a) Disconnect the D33 ECU connector.
(b) Measure the resistance according to the value(s) in the table below.

Resistance

Tester Connection	Condition	Specified Condition
D33-9 (D) - D20-7 (SIL)	Always	Below 1 Ω
D33-9 (D) - Body ground	Always	10 kΩ or higher

NG → **REPAIR OR REPLACE HARNESS OR CONNECTOR**

OK

2 CHECK HARNESS AND CONNECTOR (GROUND CIRCUIT)

DLC3:
Connector Front View:

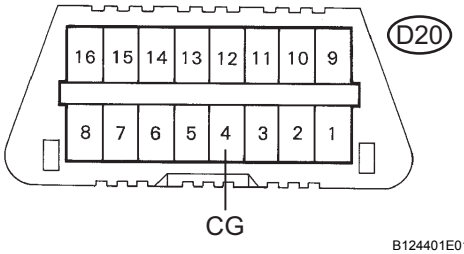

B124401E01

(a) Measure the resistance according to the value(s) in the table below.

Resistance

Tester Connection	Condition	Specified Condition
D20-4 (CG) - Body ground	Always	Below 1 Ω

NG → **REPAIR OR REPLACE HARNESS OR CONNECTOR**

OK

PROCEED TO NEXT CIRCUIT INSPECTION SHOWN IN PROBLEM SYMPTOMS TABLE

ENGINE

ON-VEHICLE INSPECTION

1. INSPECT VALVE LASH ADJUSTER NOISE

(a) Rev up the engine several times. Check that the engine does not emit unusual noises.
If unusual noises occur, warm up the engine and idle it for over 30 minutes. Then repeat this procedure.
HINT:
If any defects or problems are found during the inspection above, perform lash adjuster inspection (See page EM-76).

2. INSPECT IGNITION TIMING

(a) Warm up the engine.

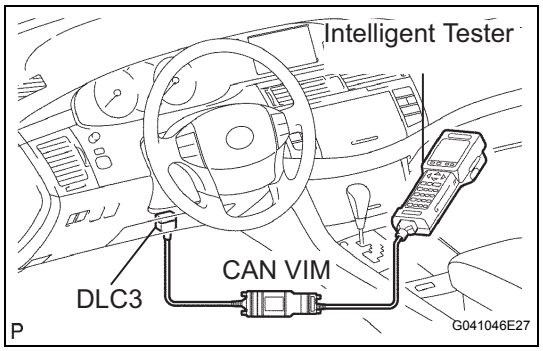

(b) When using the intelligent tester:
Check the ignition timing.
(1) Connect the intelligent tester to the DLC3.
(2) Enter DATA LIST MODE with the intelligent tester.
Ignition timing:
8 to 12° BTDC at idle
HINT:
Refer to the intelligent tester operator's manual for help on selecting the DATA LIST.

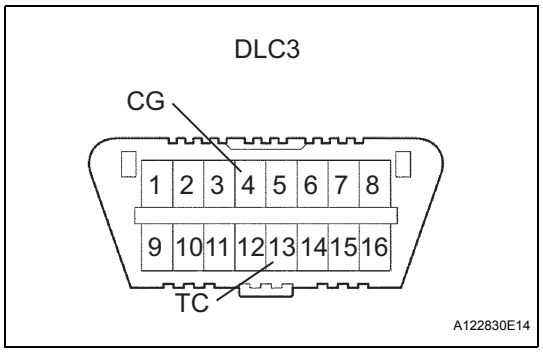

(c) When not using the intelligent tester:
Check the ignition timing.
(1) Using SST, connect terminals 13 (TC) and 4 (CG) of the DLC3.
SST 09843-18040
NOTICE:
- **Confirm the terminal numbers before connecting them. Connection with a wrong terminal can damage the engine.**
- **Turn off all electrical systems before connecting the terminals.**
- **Perform this inspection after the cooling fan motor is turned off.**

(2) Remove the V-bank cover.

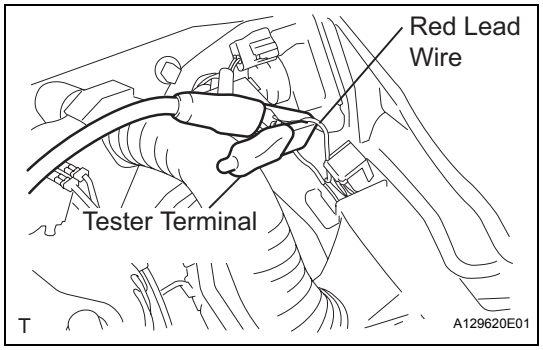

(3) Pull out the red lead wire harness.
(4) Connect the tester terminal of the timing light to the red lead wire as shown in the illustration.
NOTICE:
Use a timing light which detects the first signal.
(5) Check the ignition timing at idle.
Ignition timing:
8 to 12° BTDC at idle

NOTICE:
When checking the ignition timing, the transmission should be in the neutral position.
HINT:
Run the engine at 1,000 to 1,300 rpm for 5 seconds, and then check that the engine rpm returns to idle speed.

(6) Disconnect terminals 13 (TC) and 4 (CG) of the DLC3.
(7) Check the ignition timing at idle.
Ignition timing:
5 to 15° BTDC at idle
(8) Confirm that the ignition timing moves to the advanced angle side when the engine rpm is increased.
(9) Remove the timing light.

3. INSPECT ENGINE IDLE SPEED

(a) Warm up the engine.

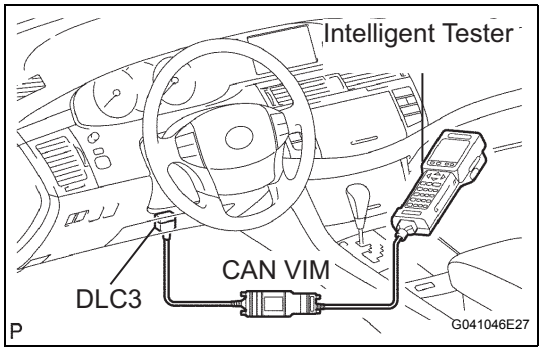

(b) When using the intelligent tester:
Check the idle speed.
(1) Connect the intelligent tester to the DLC3.
(2) Enter DATA LIST MODE with the intelligent tester.
Idle speed:
600 to 700 rpm
NOTICE:
- **When checking the idle speed, the transmission should be in the neutral position.**
- **Check the idle speed with the cooling fan off.**
- **Switch off all accessories and air conditioning before connecting the intelligent tester.**

HINT:
Refer to the intelligent tester operator's manual for further details.

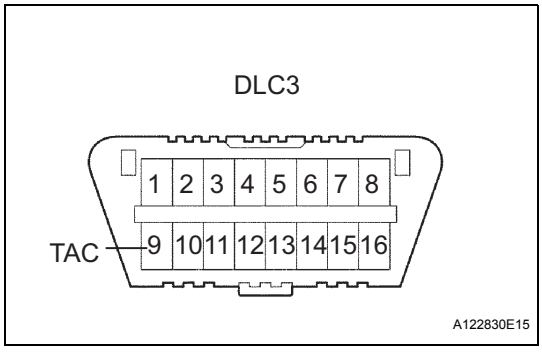

(c) When not using the intelligent tester:
Check the idle speed.
(1) Using SST, connect tachometer test probe to terminal 9 (TAC) of the DLC3.
SST 09843-18030
(2) Check the idle speed.
Idle speed:
600 to 700 rpm

4. INSPECT COMPRESSION

(a) Warm up and stop the engine.
(b) Disconnect the injector connectors.
(c) Remove the intake air surge tank (See page FU-12).
(d) Remove the 6 ignition coils.
(e) Remove the 6 spark plugs.

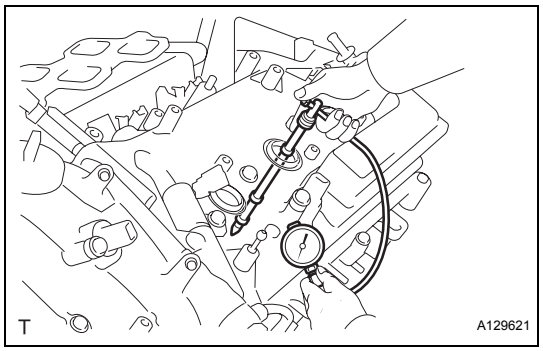

(f) Check the cylinder compression pressure.
(1) Insert a compression gauge into the spark plug hole.
(2) While cranking the engine, measure the compression pressure.
Compression pressure:
1.4 MPa (14 kgf/cm^2, 199 psi)
Minimum pressure:
0.98 MPa (10 kgf/cm^2, 142 psi)
Difference between each cylinder:
0.1 MPa (1.0 kgf/cm^2, 15 psi)
NOTICE:
- **Always use a fully charged battery to obtain an engine speed of 250 rpm or more.**
- **Check the other cylinders' compression pressure in the same way.**
- **This measurement must be done as quickly as possible.**

(3) If the cylinder compression is low, pour a small amount of engine oil into the cylinder through the spark plug hole and inspect again.
HINT:
- If adding oil increases the compression, the piston rings and / or cylinder bore may be worn or damaged.
- If pressure stays low, a valve may be stuck or seated improperly, or there may be leakage in the gasket.

5. INSPECT CO/HC
(a) Start the engine.
(b) Rev the engine at 2,500 rpm for approximately 180 seconds.
(c) Insert CO/HC meter testing probe at least 40 cm (1.3 ft) into the tailpipe during idling.
(d) Check CO/HC concentration at idle and / or 2,500 rpm.
HINT:
Check regulations and restrictions in your area when performing 2 mode CO/CH concentration testing (engine check at both idle speed and at 2,500 rpm).
If the CO/HC concentration does not comply with regulations, troubleshoot in the order given below.
(1) Check A/F sensor and heated oxygen sensor operation.

EM

(2) See the table below for possible causes, and then inspect and repair.

CO	HC	Problems	Causes
Normal	High	Rough idle	1. Faulty ignitions: – Incorrect timing – Fouled, shorted or improperly gapped plugs 2. Incorrect valve clearance 3. Leaks in intake and exhaust valves 4. Leaks in cylinders
Low	High	Rough idle (fluctuating HC reading)	1. Vacuum leaks: – PCV hoses – Intake manifold – Throttle body – Brake booster line 2. Lean mixture causing misfire
High	High	Rough idle (black smoke from exhaust)	1. Restricted air filter 2. Plugged PCV valve 3. Faulty SFI system: – Faulty fuel pressure regulator – Defective ECT sensor – Defective MAF meter – Faulty ECM – Faulty injectors – Faulty throttle position sensor

DRIVE BELT

COMPONENTS

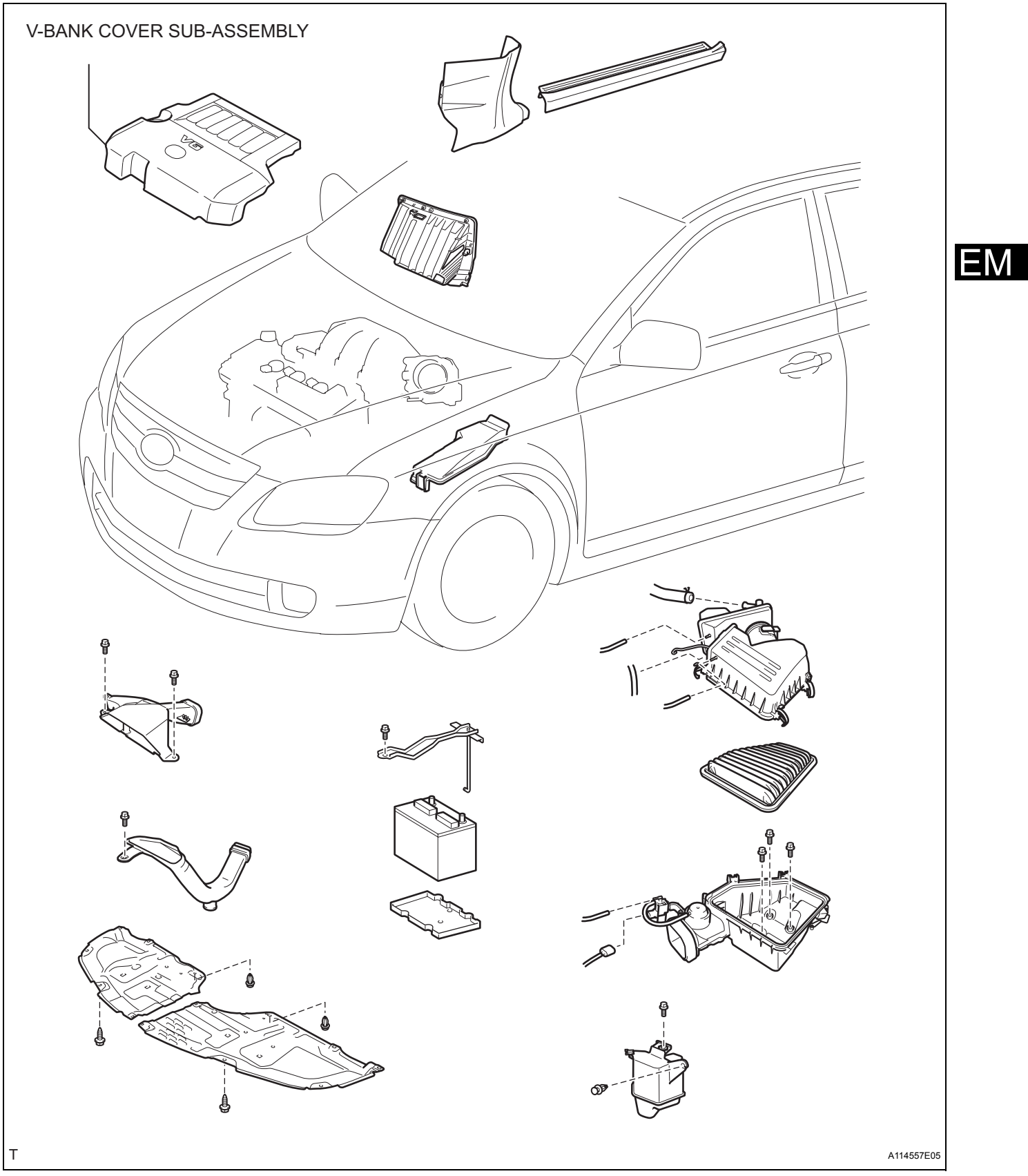

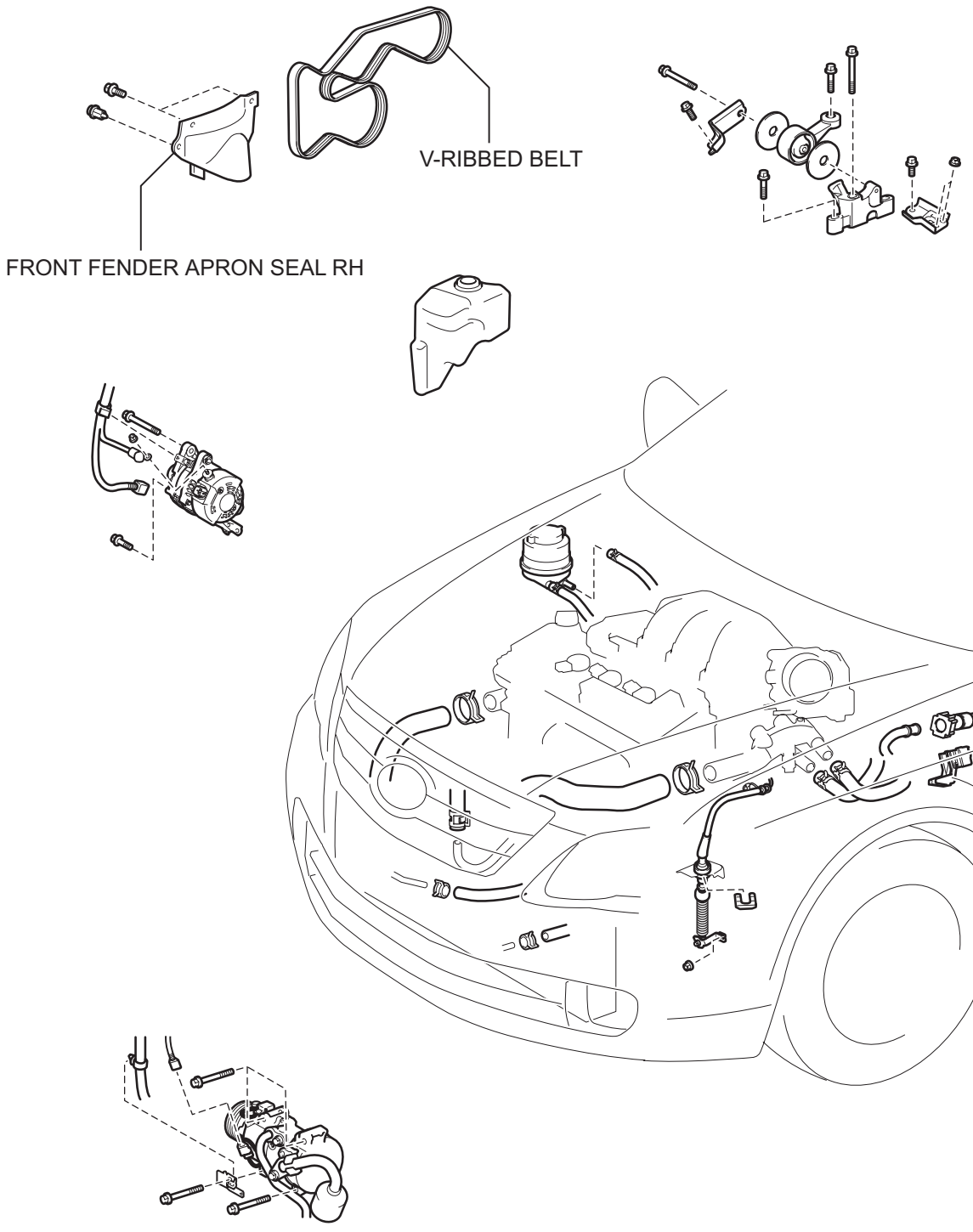

EM

T

A114559E04

REMOVAL

1. **REMOVE FRONT WHEEL RH**
2. **REMOVE FRONT FENDER APRON SEAL RH**
3. **REMOVE V-BANK COVER SUB-ASSEMBLY**
4. **REMOVE V-RIBBED BELT**
   (a) Using SST, release the belt tension by turning the belt tensioner counterclockwise, and remove the V-ribbed belt from the belt tensioner.
   SST 09249-63010

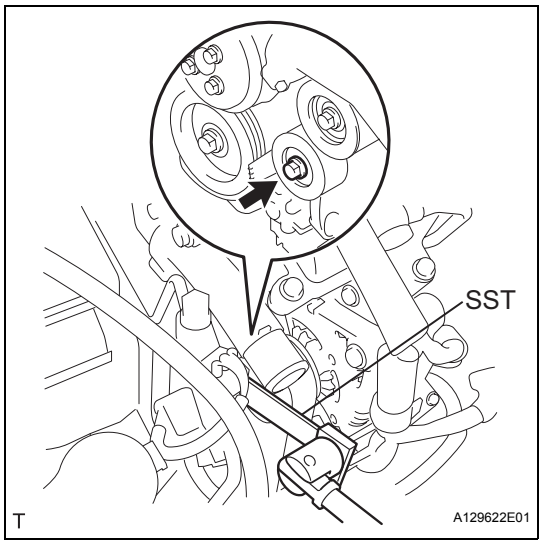

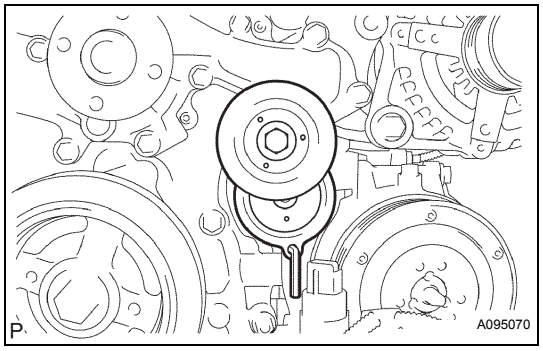

   (b) While turning the belt tensioner counterclockwise, align with its holes, and then insert the 5 mm bi-hexagon wrench into the holes to fix the V-ribbed belt tensioner.

INSPECTION

1. **INSPECT V-RIBBED BELT**
   (a) Visually check the V-ribbed belt for excessive wear, frayed cords, etc.
   If any defect has been found, replace the V-ribbed belt.
   HINT:
   Cracks on the rib side of a V-ribbed belt are considered acceptable.
   If the drive belt has chunks missing from its ribs, it should be replaced.
   HINT:
   - After installing the V-ribbed belt, check that it fits properly in the ribbed grooves. Check to confirm that the belt has not slipped out of the grooves on the bottom of the crank pulley by hand.
   - A "new belt" is a belt which has been used for less than 5 minutes with the engine running.
   - A "used belt" is a belt which has been used for 5 minutes with the engine running.

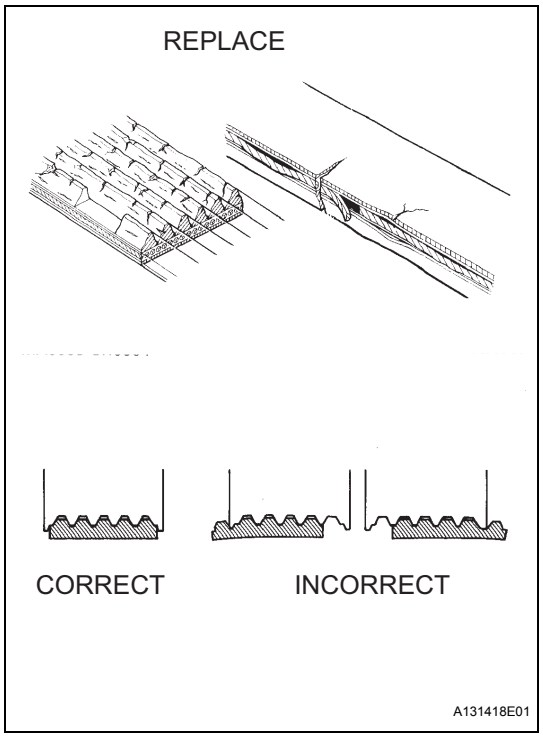

- After installing a new belt, run the engine for approximately 5 minutes and then recheck the tension.

2. INSPECT V-REBBED BELT TENSIONER ASSEMBLY

(a) Check that nothing gets caught in the tensioner by turning it clockwise and counterclockwise.
If a malfunction exitsts, replace the tensioner.

INSTALLATION

1. INSTALL V-RIBBED BELT

(a) Install the V-ribbed belt.

(b) Using SST, turn the belt tensioner counterclockwise, remove the bar.
SST 09249-63010

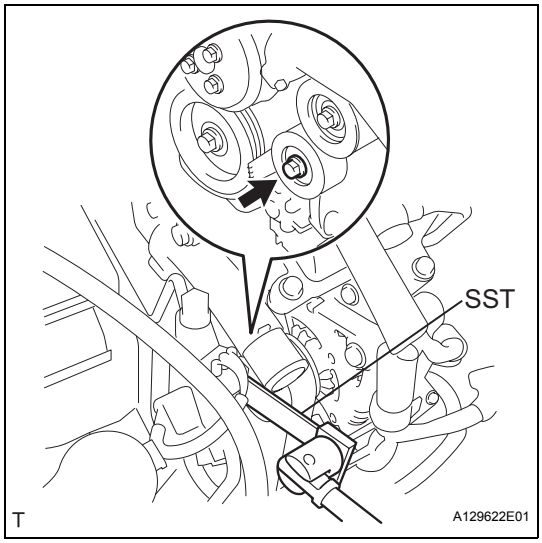

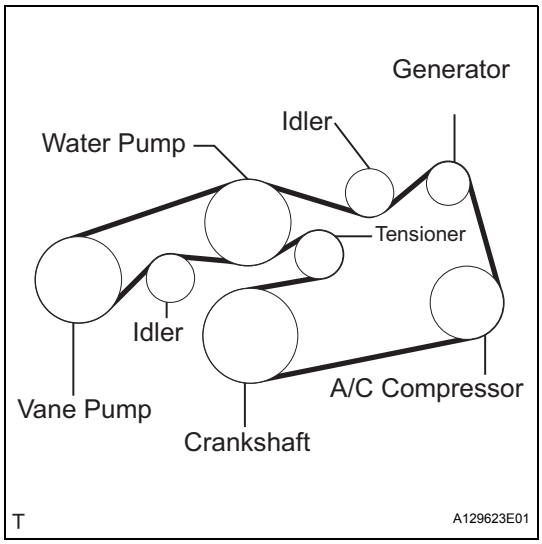

(c) If it is difficult to install the V-ribbed belt, perform the following procedure.
(1) Put the V-ribbed belt on everything except the tensioner pulley as shown in the illustration.
(2) While releasing the belt tension by turning the belt tensioner counterclockwise, put the V-ribbed belt on the tensioner pulley.
NOTICE:
- **Put the backside of the V-ribbed belt on the tensioner pulley and idler pulley.**
- **Check that the V-ribbed belt is properly set to each pulley.**

2. INSTALL V-BANK COVER SUB-ASSEMBLY

3. INSTALL FRONT FENDER APRON SEAL RH

4. INSTALL FRONT WHEEL RH
Torque: 103 N*m (1,050 kgf*cm, 76 ft.*lbf)

ENGINE FRONT OIL SEAL

COMPONENTS

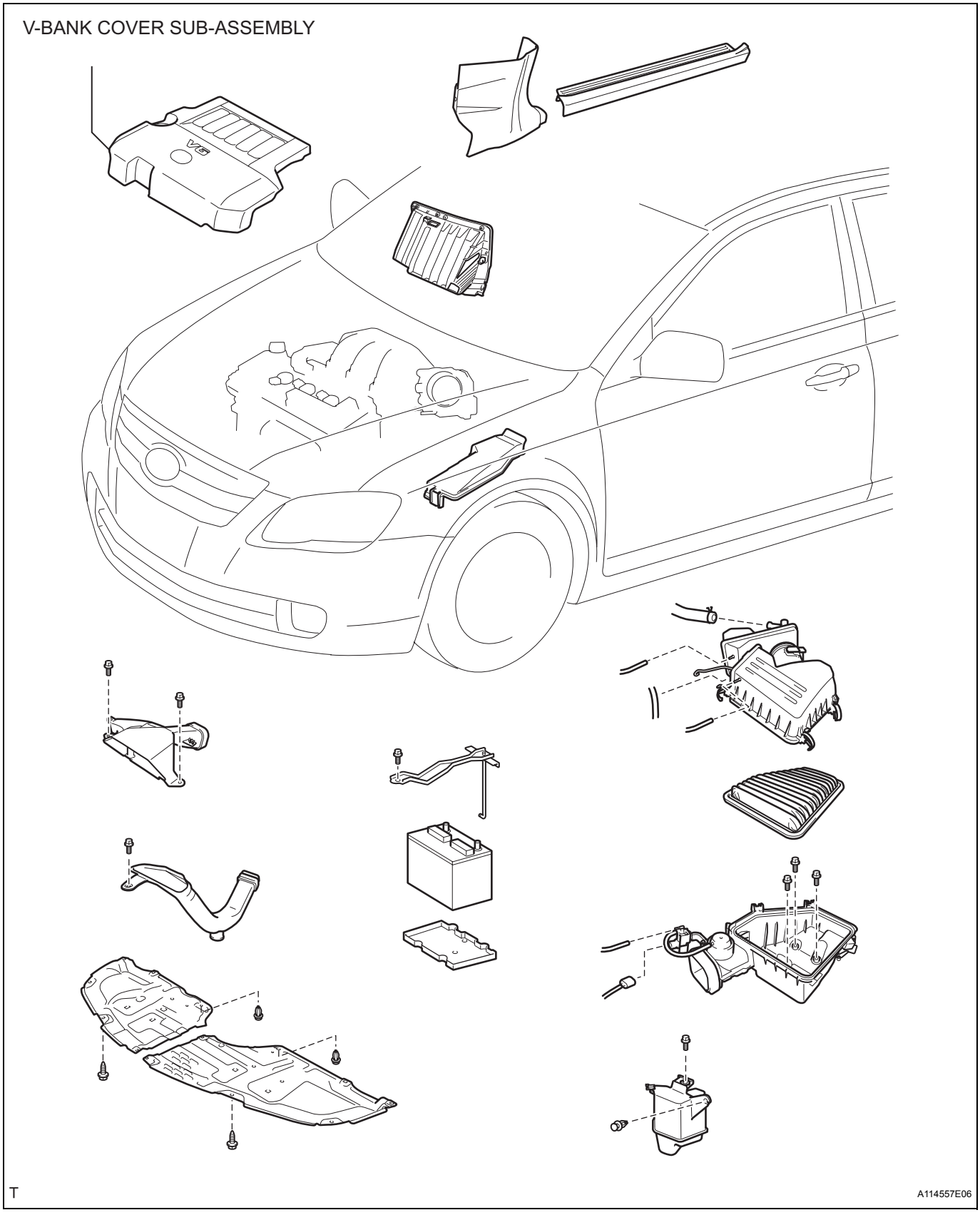

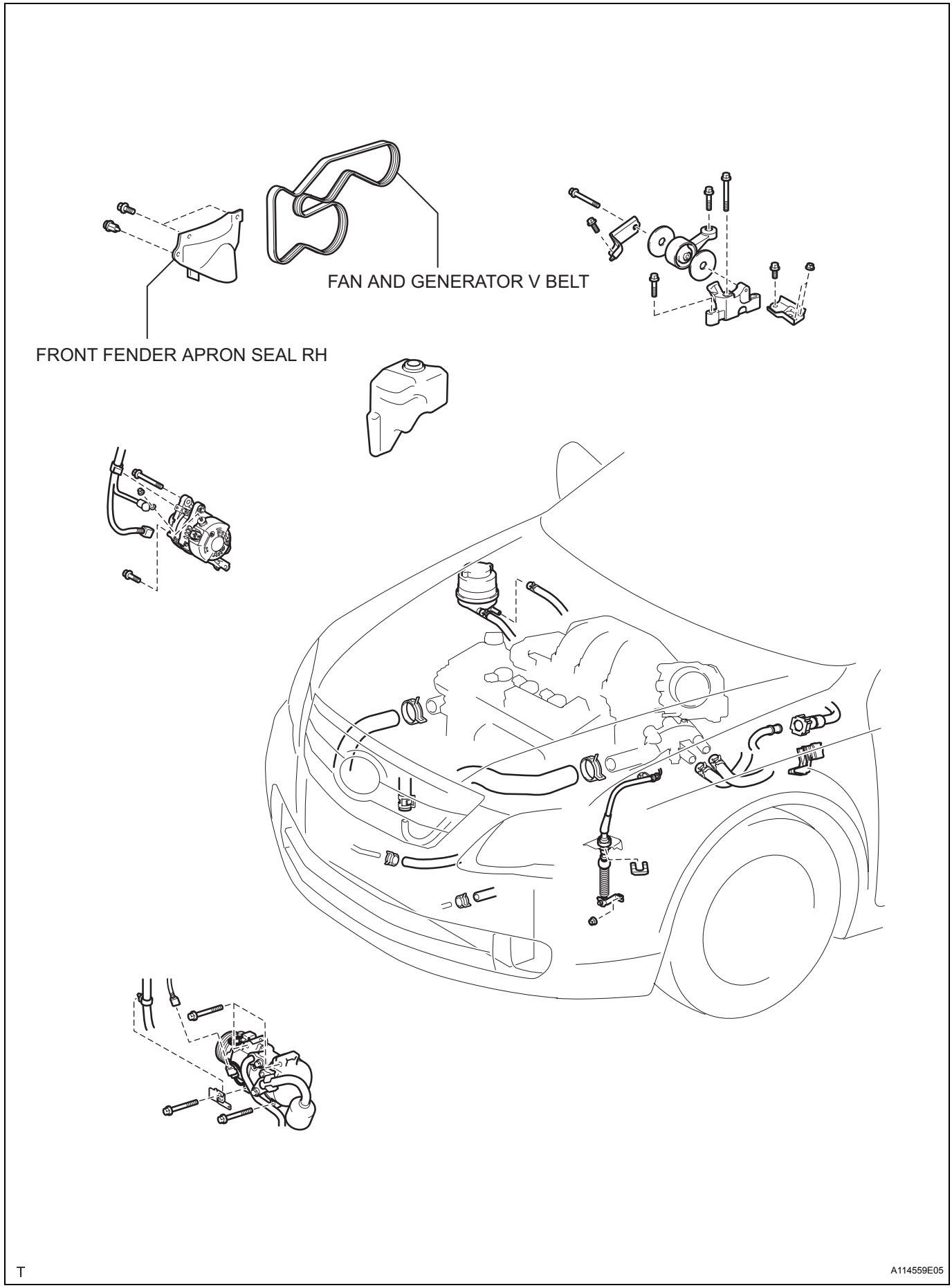
FAN AND GENERATOR V BELT
FRONT FENDER APRON SEAL RH
EM
T
A114559E05

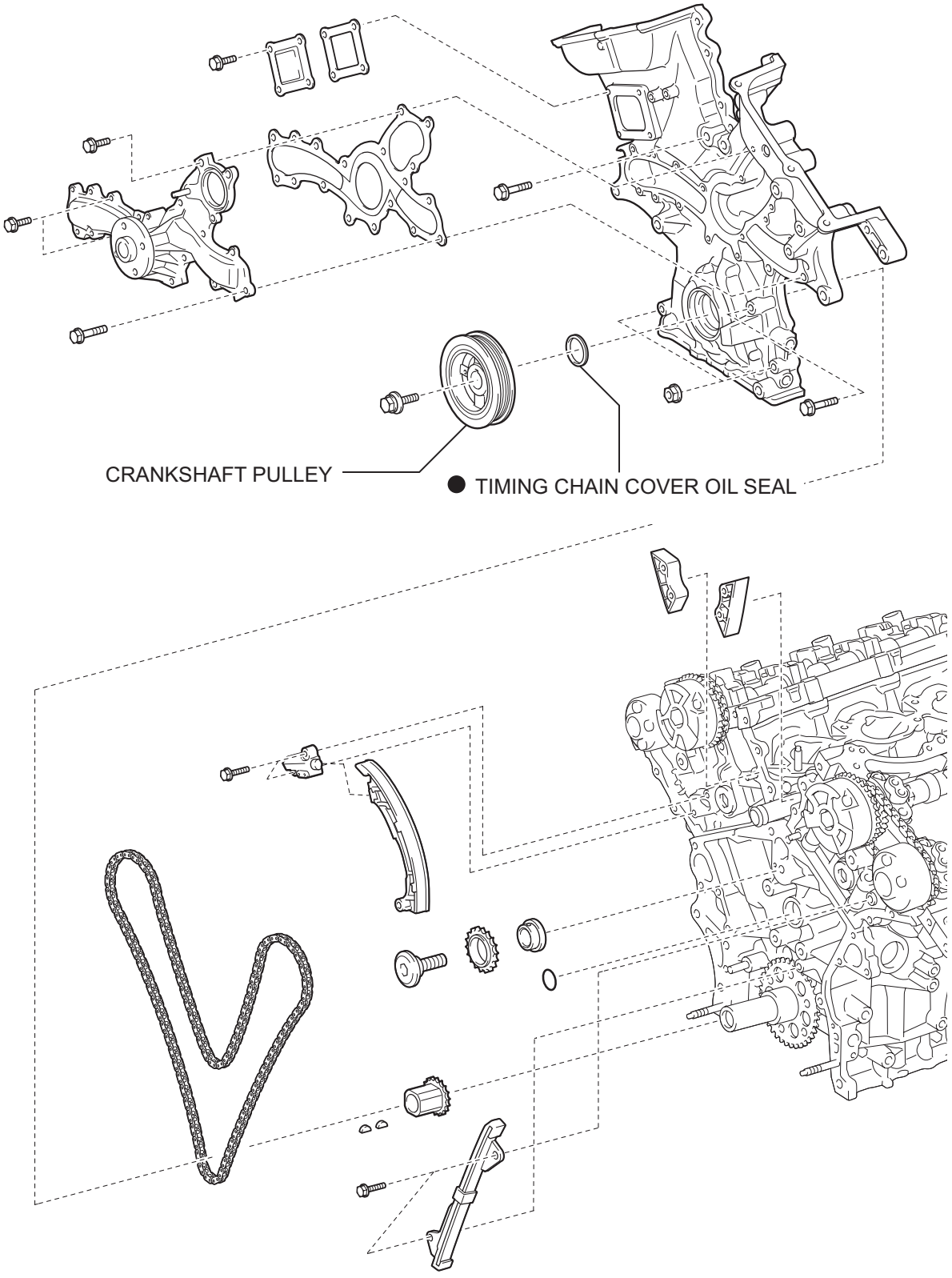
CRANKSHAFT PULLEY
● TIMING CHAIN COVER OIL SEAL
● Non-reusable part
P
A114567E02

EM

REMOVAL

1. **REMOVE FRONT WHEEL RH**
2. **REMOVE FRONT FENDER APRON SEAL RH**
3. **REMOVE V-BANK COVER SUB-ASSEMBLY**
4. **REMOVE FAN AND GENERATOR V BELT**
   HINT:
   Remove V-ribbed belt (See page EM-7).
   SST 09249-63010
5. **REMOVE CRANKSHAFT PULLEY (See page EM-59)**
6. **REMOVE TIMING CHAIN COVER OIL SEAL**
   (a) Using a screwdriver, pry out the oil seal.
   NOTICE:
   Be careful not to damage the crankshaft. Tape the screwdriver tip before use.

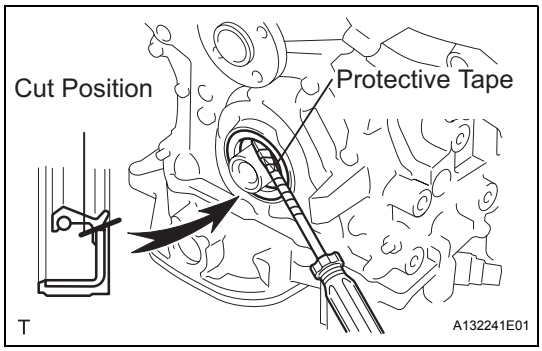

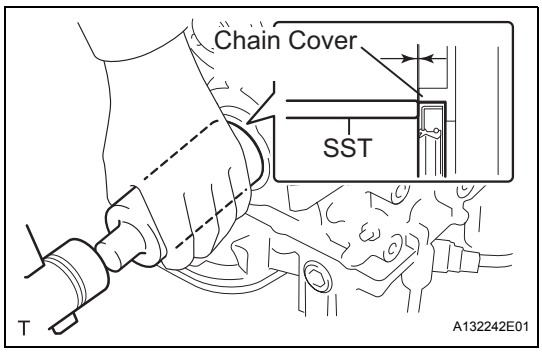

INSTALLATION

1. **INSTALL TIMING CHAIN COVER OIL SEAL**
   (a) Apply MP grease to a new oil seal lip.
   (b) Using SST and a hammer, tap in the oil seal until its surface is flush with the timing chain cover edge.
   SST 09316-60011 (09316-00011)
2. **INSTALL CRANKSHAFT PULLEY (See page EM-145)**
3. **INSTALL FAN AND GENERATOR V BELT**
   HINT:
   Install the V-ribbed belt (See page EM-8).
   SST 09249-63010
4. **INSTALL V-BANK COVER SUB-ASSEMBLY**
5. **INSTALL FRONT WHEEL RH**

ENGINE REAR OIL SEAL

COMPONENTS

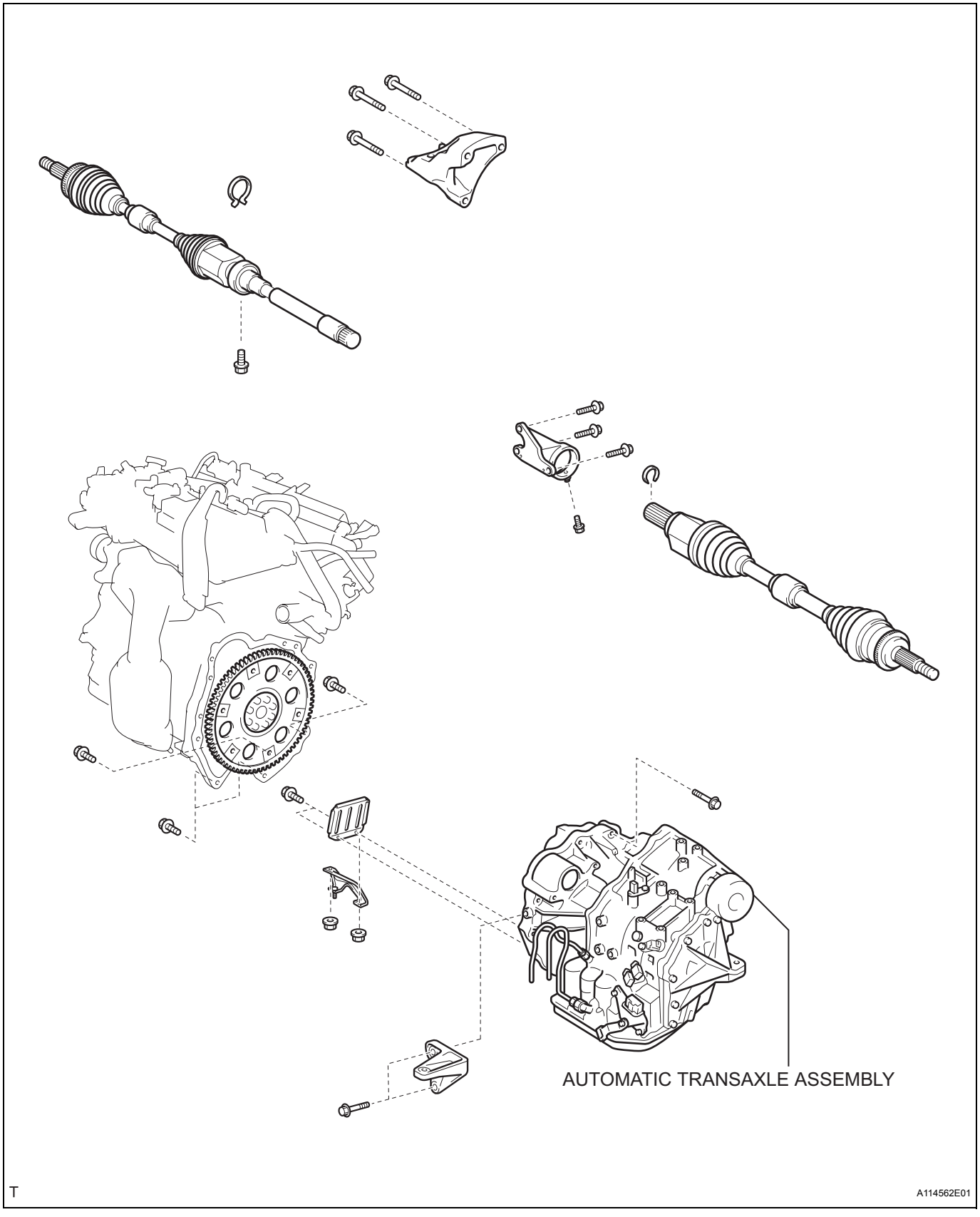

EM

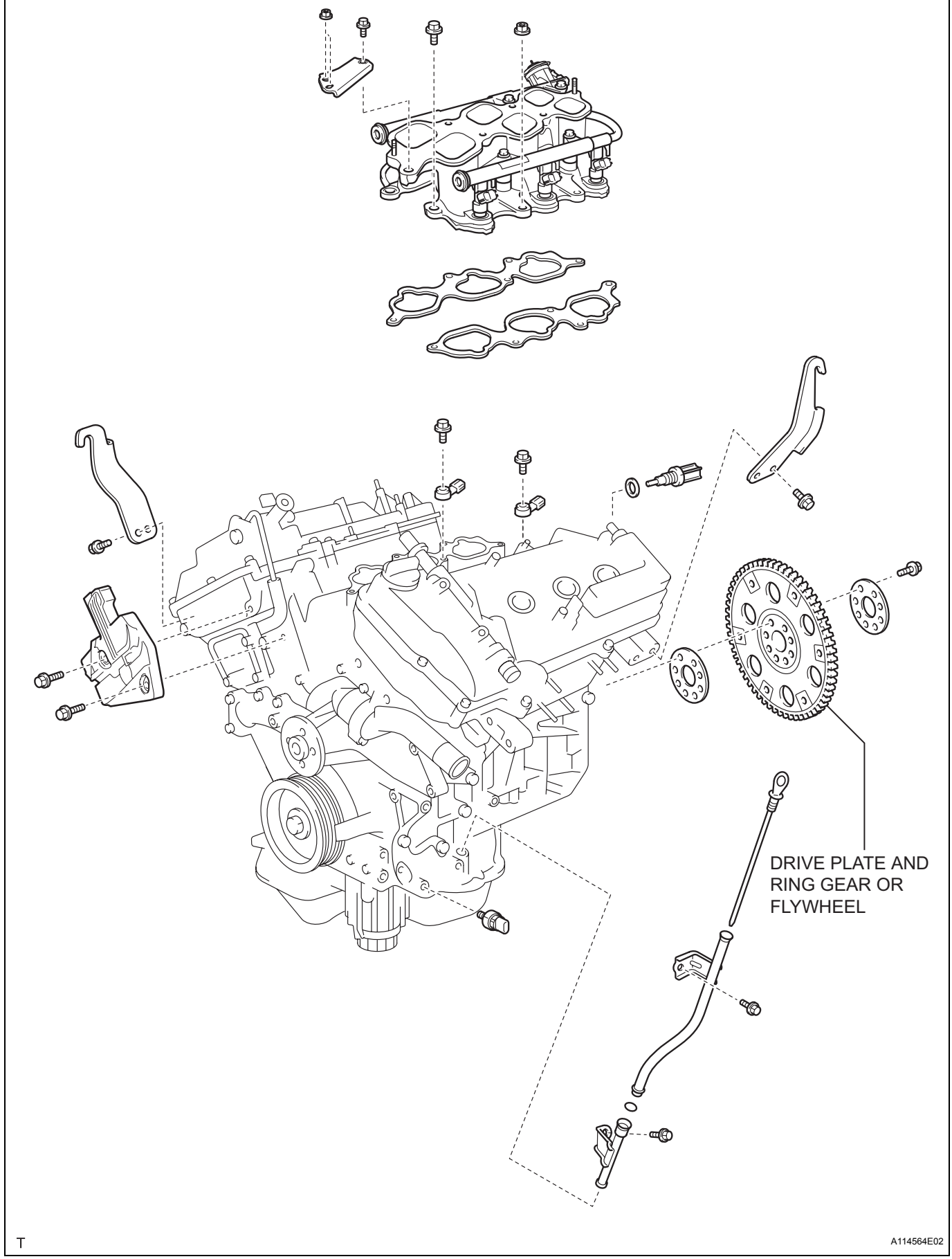

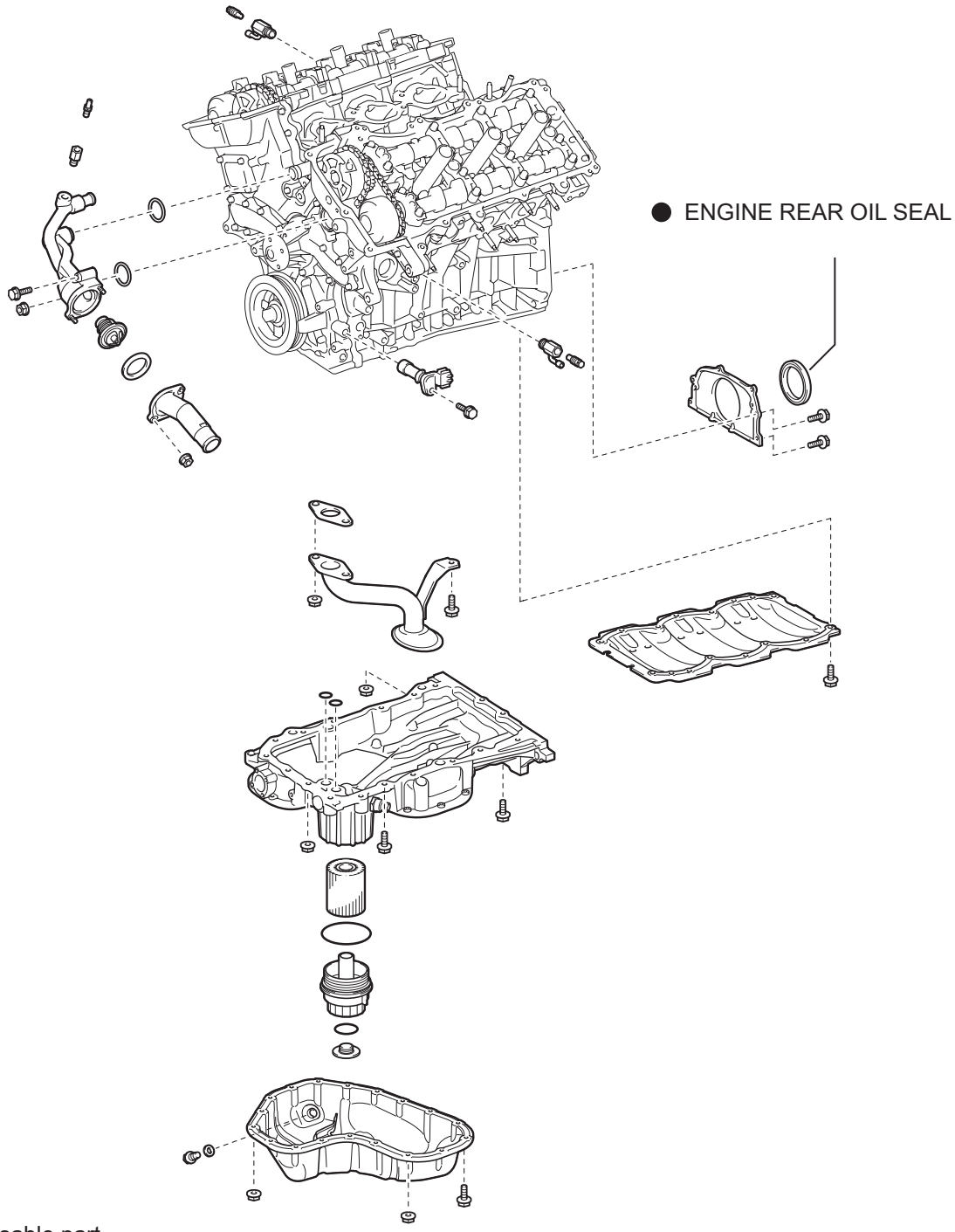
● ENGINE REAR OIL SEAL
● Non-reusable part
P
A114566E06

REMOVAL

1. **REMOVE AUTOMATIC TRANSAXLE ASSEMBLY (See page AX-158)**

2. **REMOVE DRIVE PLATE AND RING GEAR OR FLYWHEEL**
   (a) Using SST, hold the crankshaft.
   SST 09213-70011 (09213-70020), 09330-00021

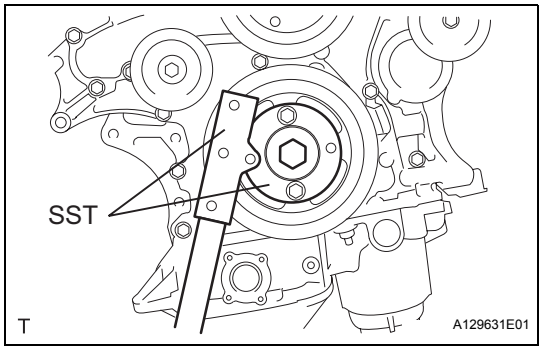

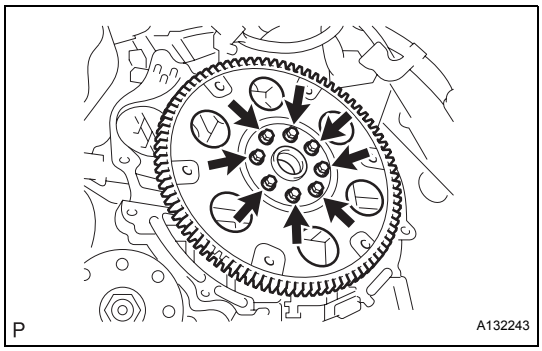

   (b) Remove the 8 bolts, front spacer, drive plate and rear spacer.

3. **REMOVE ENGINE REAR OIL SEAL**
   (a) Using a knife, cut off the oil seal lip.
   (b) Using a screwdriver, pry out the oil seal.
   NOTICE:
   Be careful not to damage the crankshaft. Tape the screwdriver tip before use.

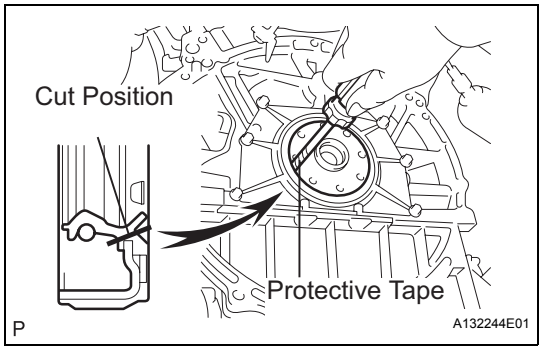

INSTALLATION

1. **INSTALL ENGINE REAR OIL SEAL**
   (a) Apply MP grease to a new oil seal lip.
   (b) Using SST and a hammer, tap in the oil seal.
   SST 09223-15030, 09950-70010 (09951-07150)
   Oil seal tap in depth:
   -0.5 to 0.5 mm (-0.020 to 0.020 in.)

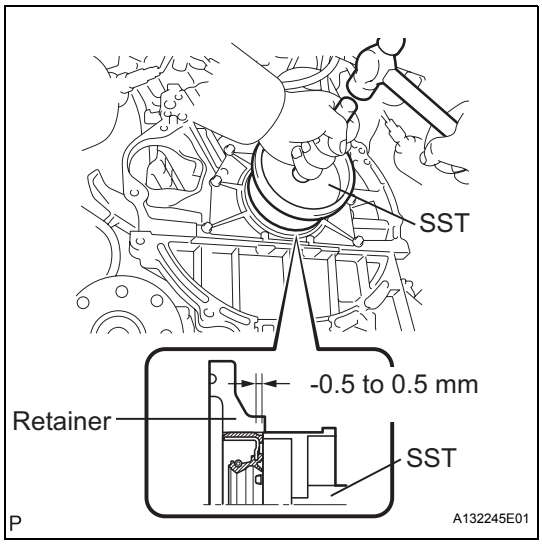

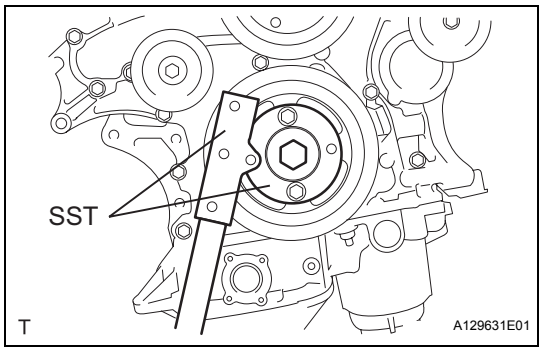

2. INSTALL DRIVE PLATE AND RING GEAR OR FLYWHEEL

(a) Using SST, hold the crankshaft.
SST 09213-70011 (09213-70020), 09330-00021

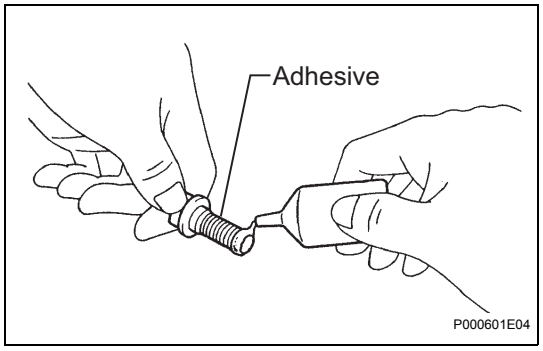

(b) Apply adhesive to 2 or 3 threads of the mounting bolt end.
Adhesive:
Part No. 08833-00070, THREE BOND 1324 or equivalent

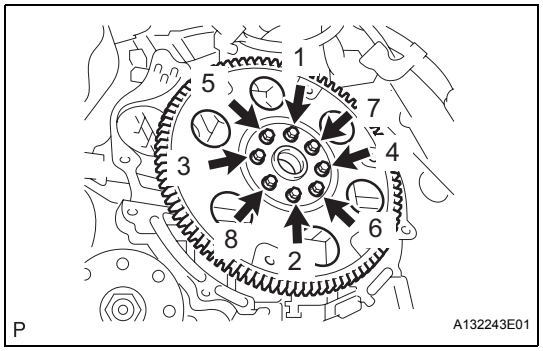

(1) Install the front spacer, drive plate and rear spacer on the crankshaft.
(2) Install and tighten the 8 mounting bolts uniformly in several steps.
Torque: 83 N*m (850 kgf*cm, 61 ft.*lbf)

3. INSTALL AUTOMATIC TRANSAXLE ASSEMBLY (See page AX-160)

EM

ENGINE ASSEMBLY

COMPONENTS

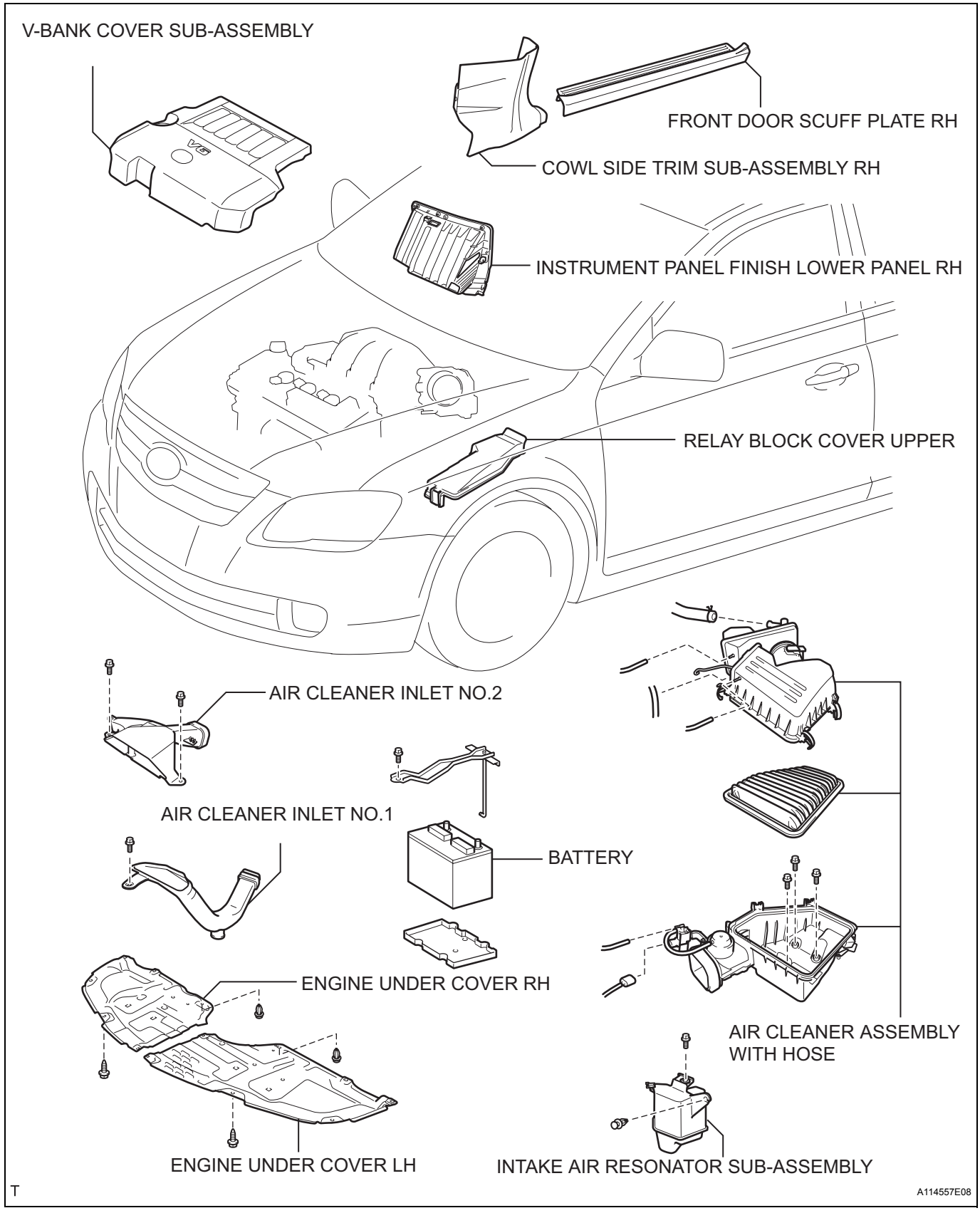

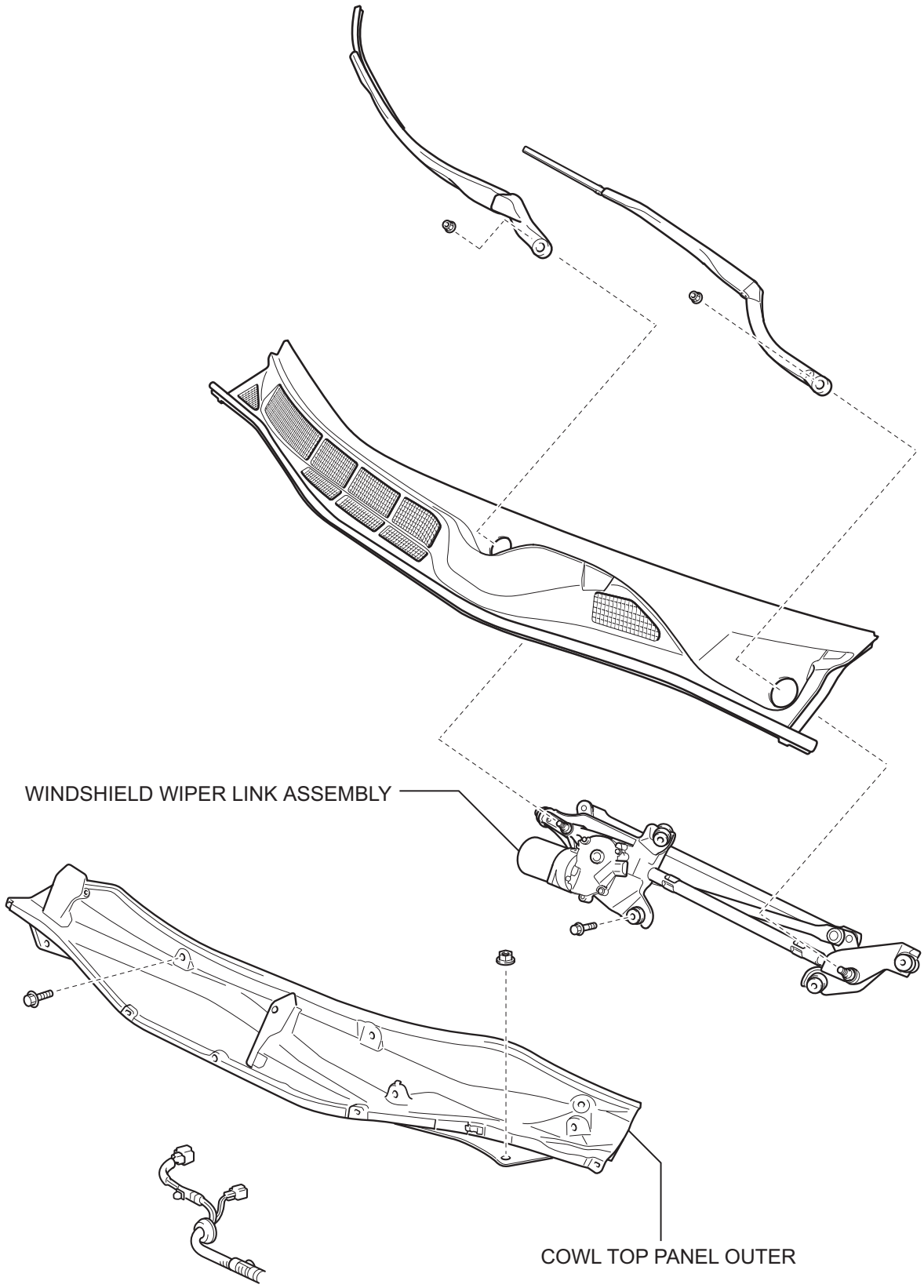

T

A114558E01

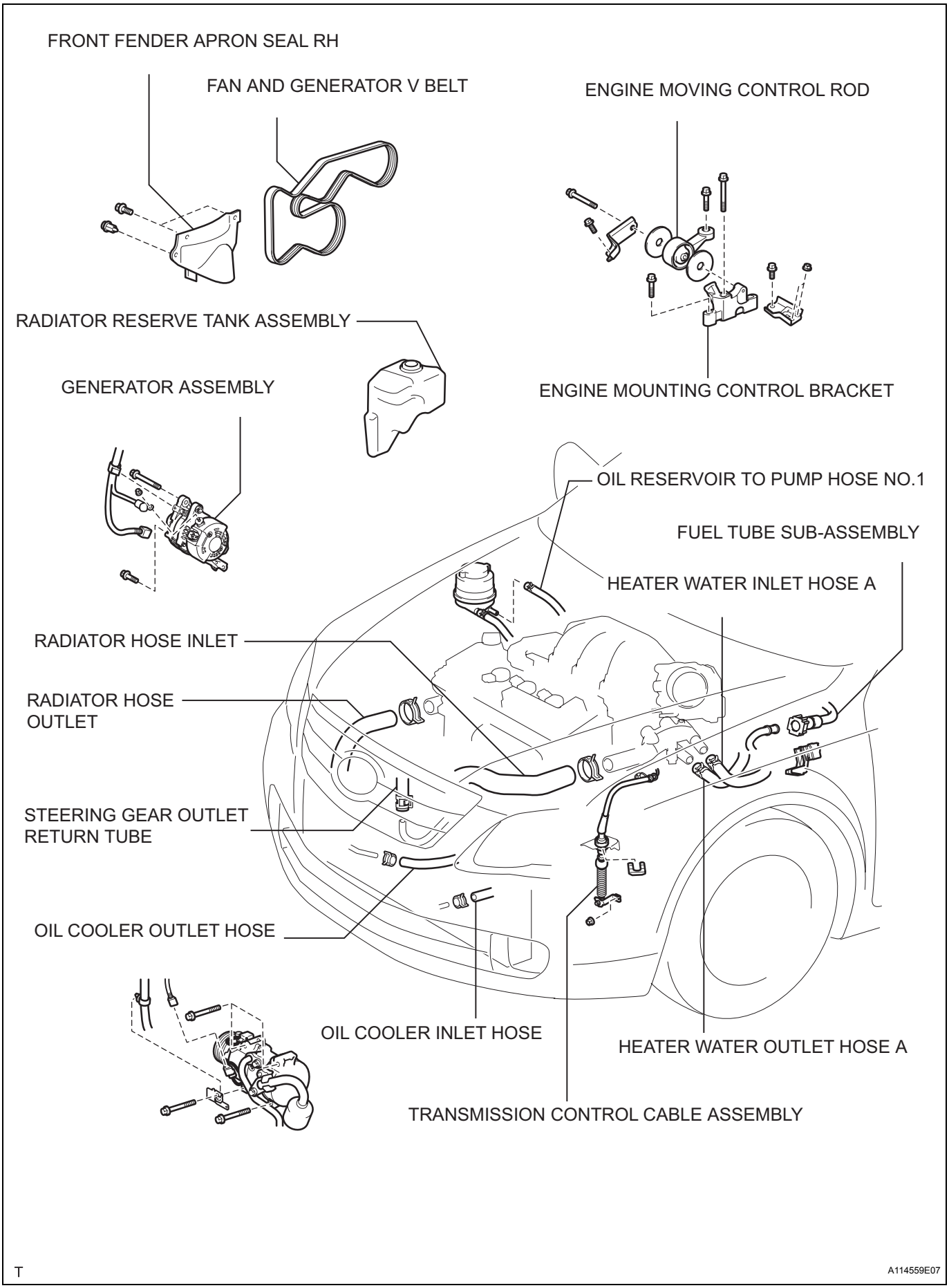
FRONT FENDER APRON SEAL RH
FAN AND GENERATOR V BELT
ENGINE MOVING CONTROL ROD
RADIATOR RESERVE TANK ASSEMBLY
GENERATOR ASSEMBLY
ENGINE MOUNTING CONTROL BRACKET
OIL RESERVOIR TO PUMP HOSE NO.1
FUEL TUBE SUB-ASSEMBLY
HEATER WATER INLET HOSE A
RADIATOR HOSE INLET
RADIATOR HOSE OUTLET
STEERING GEAR OUTLET RETURN TUBE
OIL COOLER OUTLET HOSE
OIL COOLER INLET HOSE
HEATER WATER OUTLET HOSE A
TRANSMISSION CONTROL CABLE ASSEMBLY
T
A114559E07

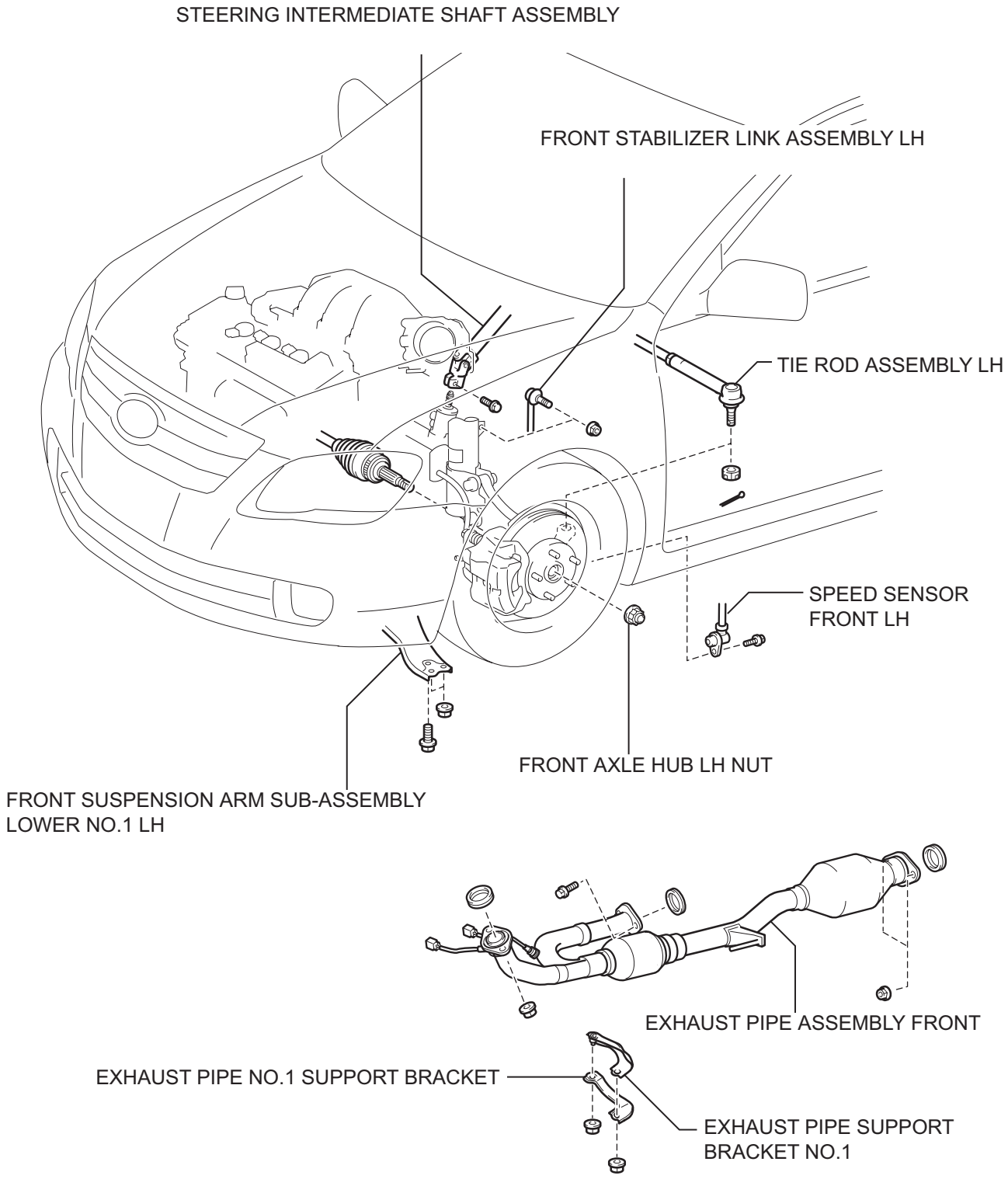

EM

T

A114560E01

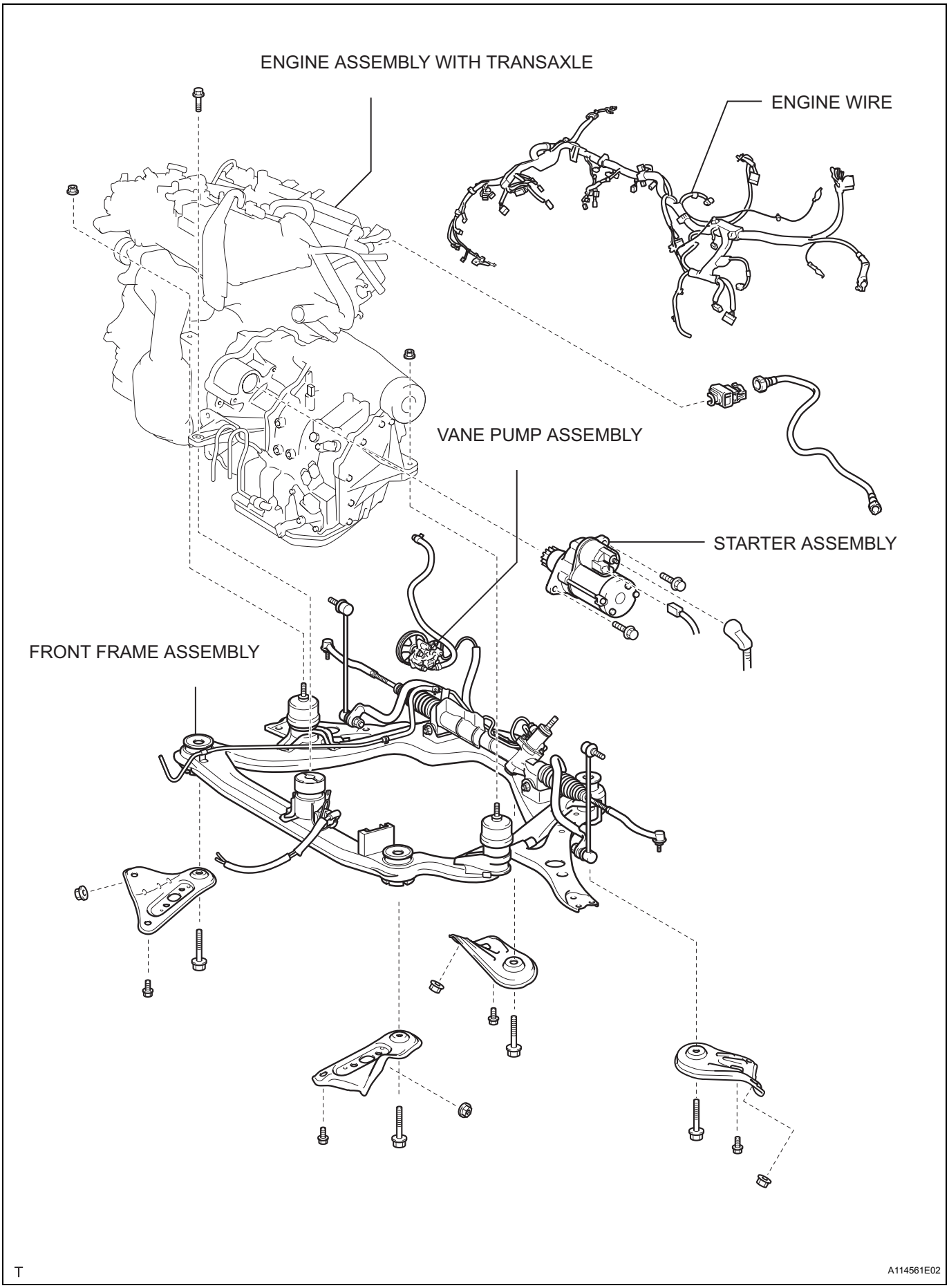
ENGINE ASSEMBLY WITH TRANSAXLE
ENGINE WIRE
VANE PUMP ASSEMBLY
STARTER ASSEMBLY
FRONT FRAME ASSEMBLY
T
A114561E02

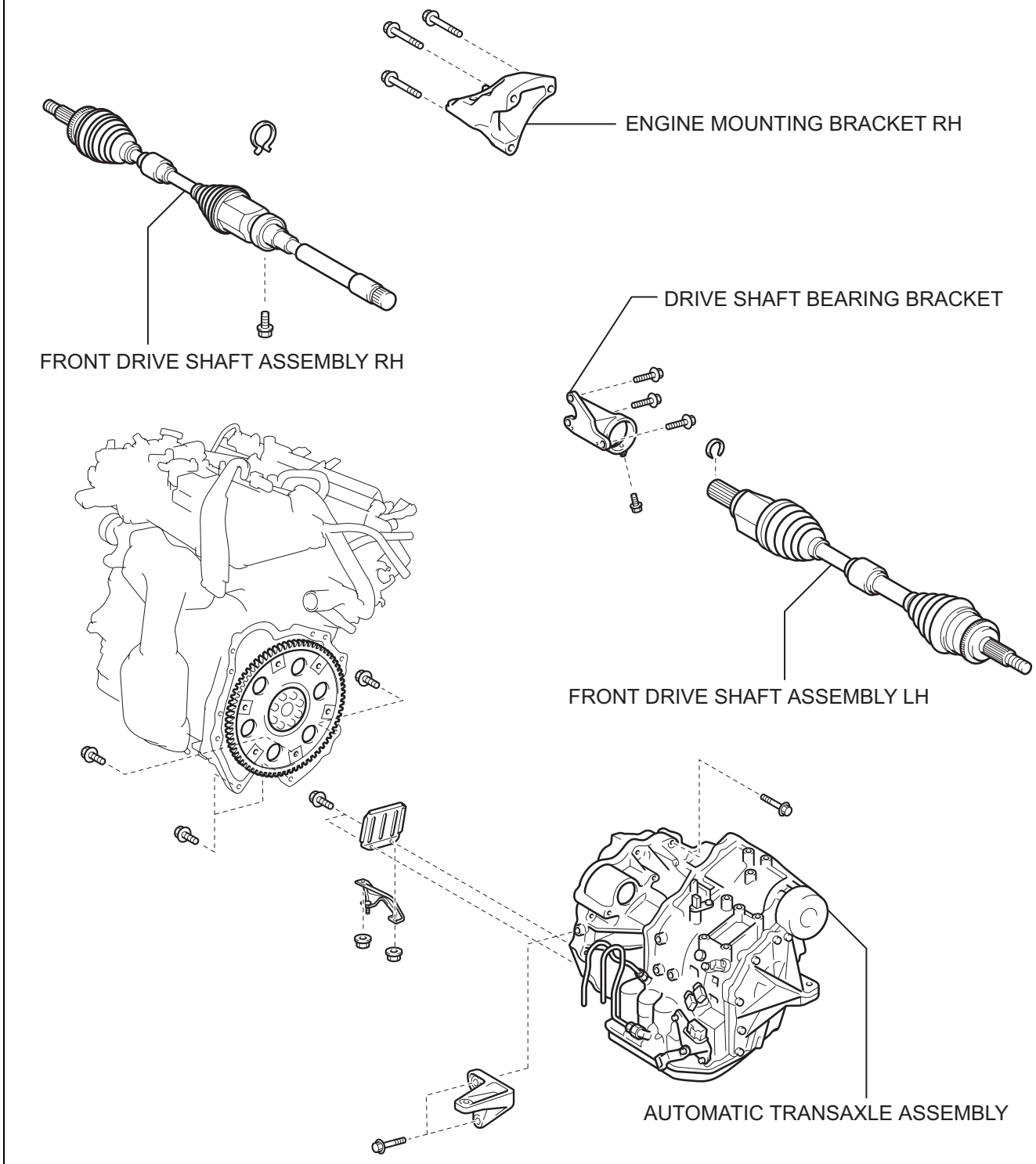
ENGINE MOUNTING BRACKET RH
FRONT DRIVE SHAFT ASSEMBLY RH
DRIVE SHAFT BEARING BRACKET
FRONT DRIVE SHAFT ASSEMBLY LH
AUTOMATIC TRANSAXLE ASSEMBLY
A114562E02

EM

T

EM

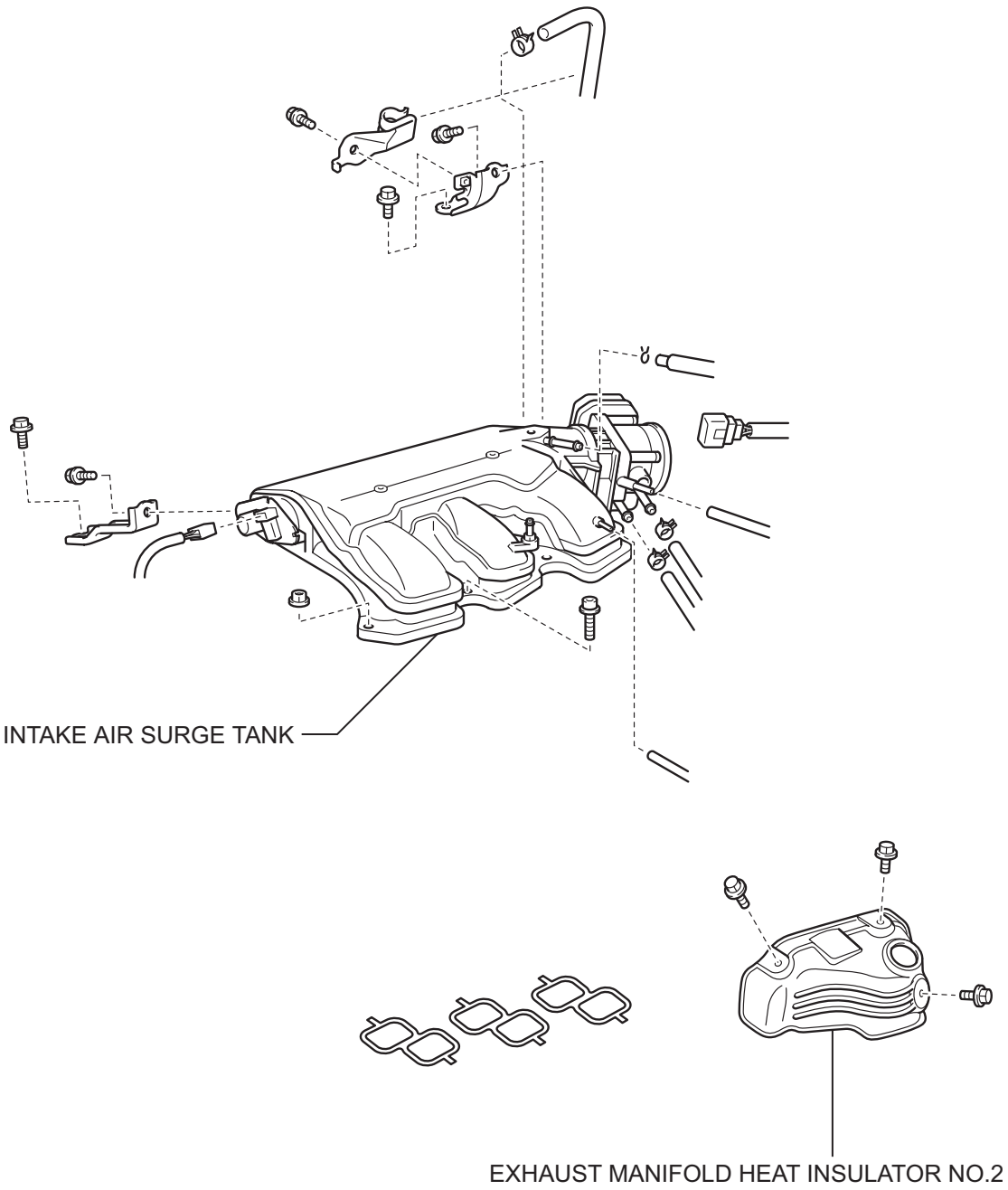

T

A114589E02

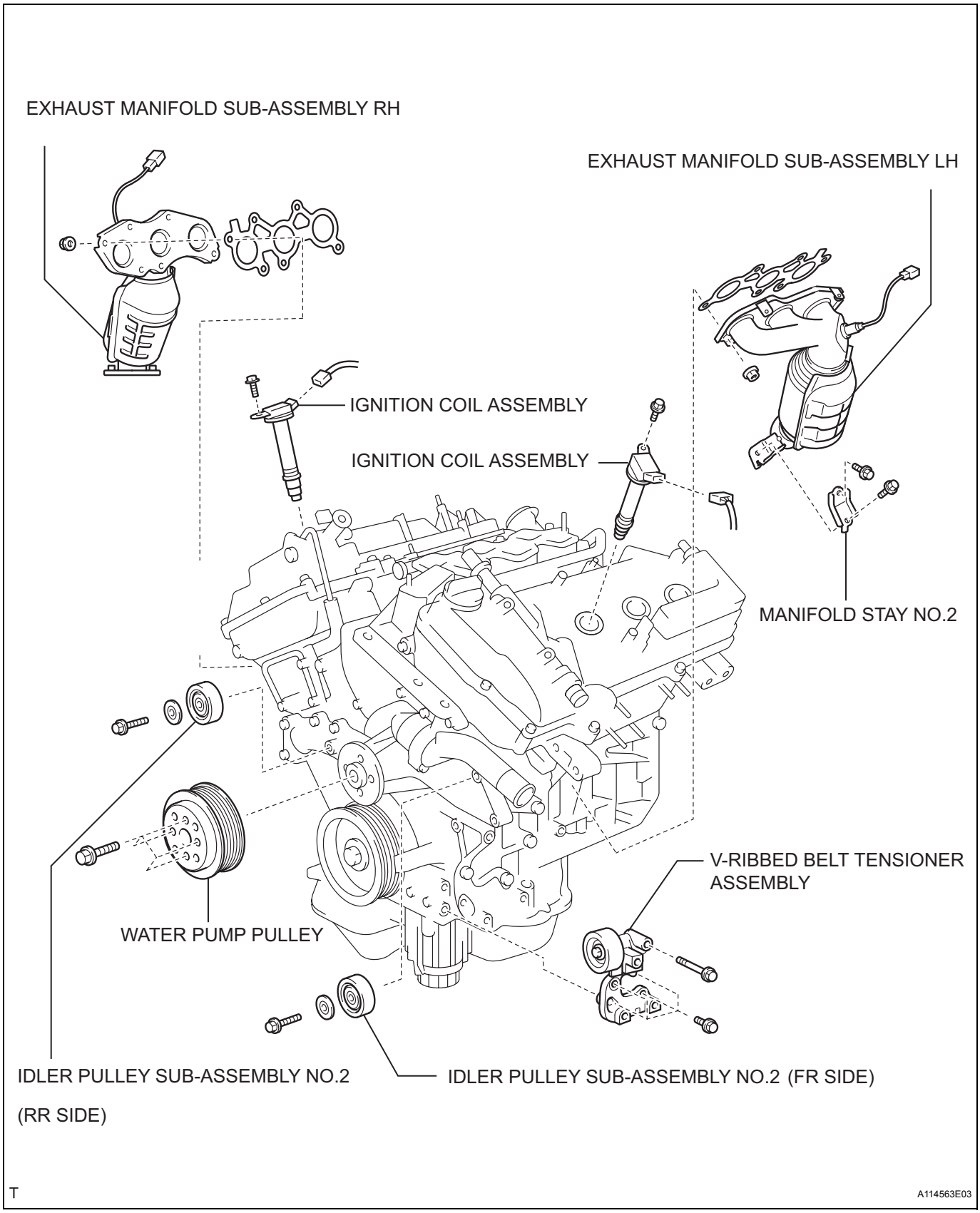
EXHAUST MANIFOLD SUB-ASSEMBLY RH
EXHAUST MANIFOLD SUB-ASSEMBLY LH
IGNITION COIL ASSEMBLY
IGNITION COIL ASSEMBLY
MANIFOLD STAY NO.2
V-RIBBED BELT TENSIONER ASSEMBLY
WATER PUMP PULLEY
IDLER PULLEY SUB-ASSEMBLY NO.2 (RR SIDE)
IDLER PULLEY SUB-ASSEMBLY NO.2 (FR SIDE)
T
A114563E03

EM

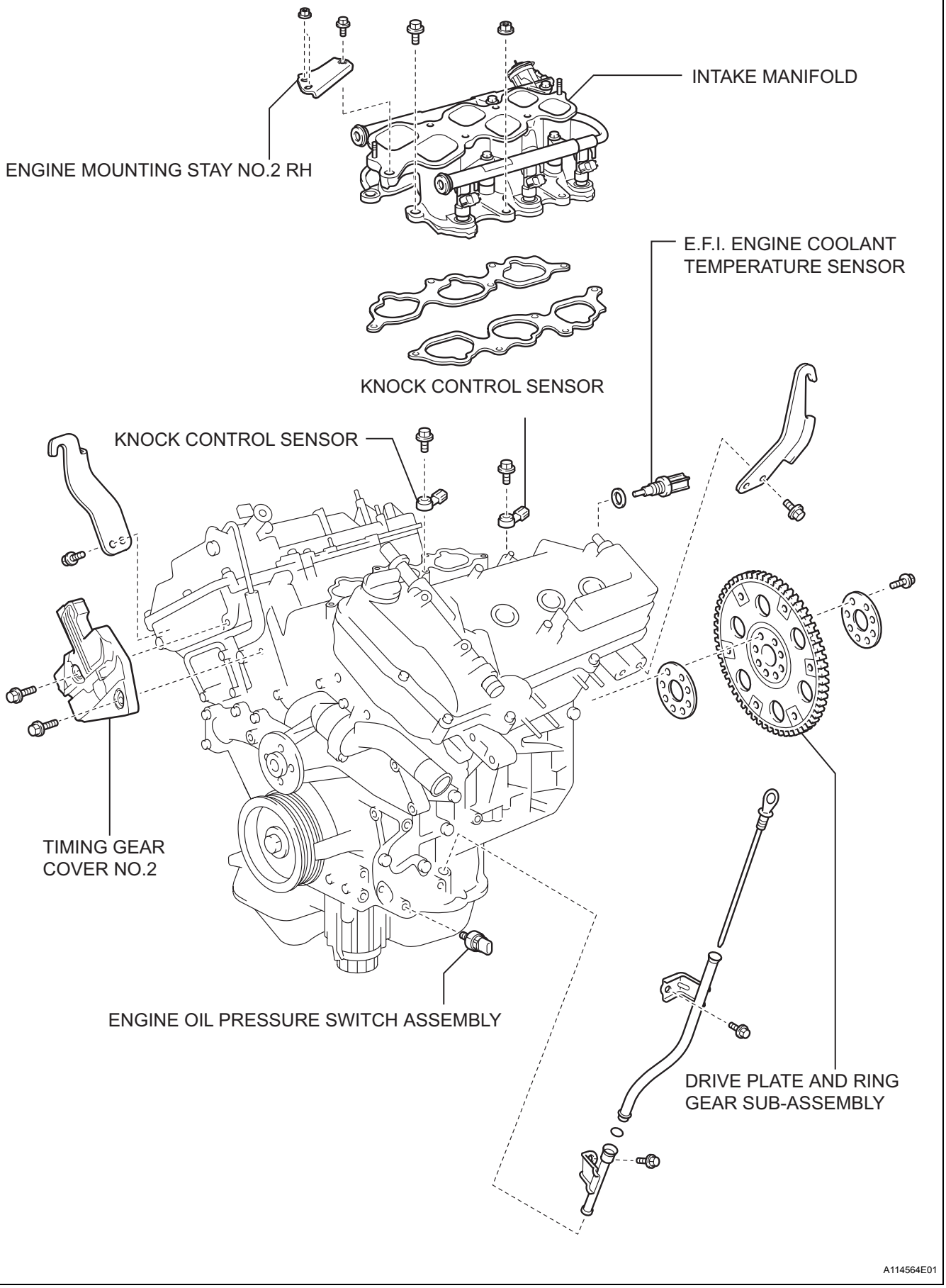
INTAKE MANIFOLD
ENGINE MOUNTING STAY NO.2 RH
E.F.I. ENGINE COOLANT TEMPERATURE SENSOR
KNOCK CONTROL SENSOR
KNOCK CONTROL SENSOR
TIMING GEAR COVER NO.2
ENGINE OIL PRESSURE SWITCH ASSEMBLY
DRIVE PLATE AND RING GEAR SUB-ASSEMBLY
T
A114564E01

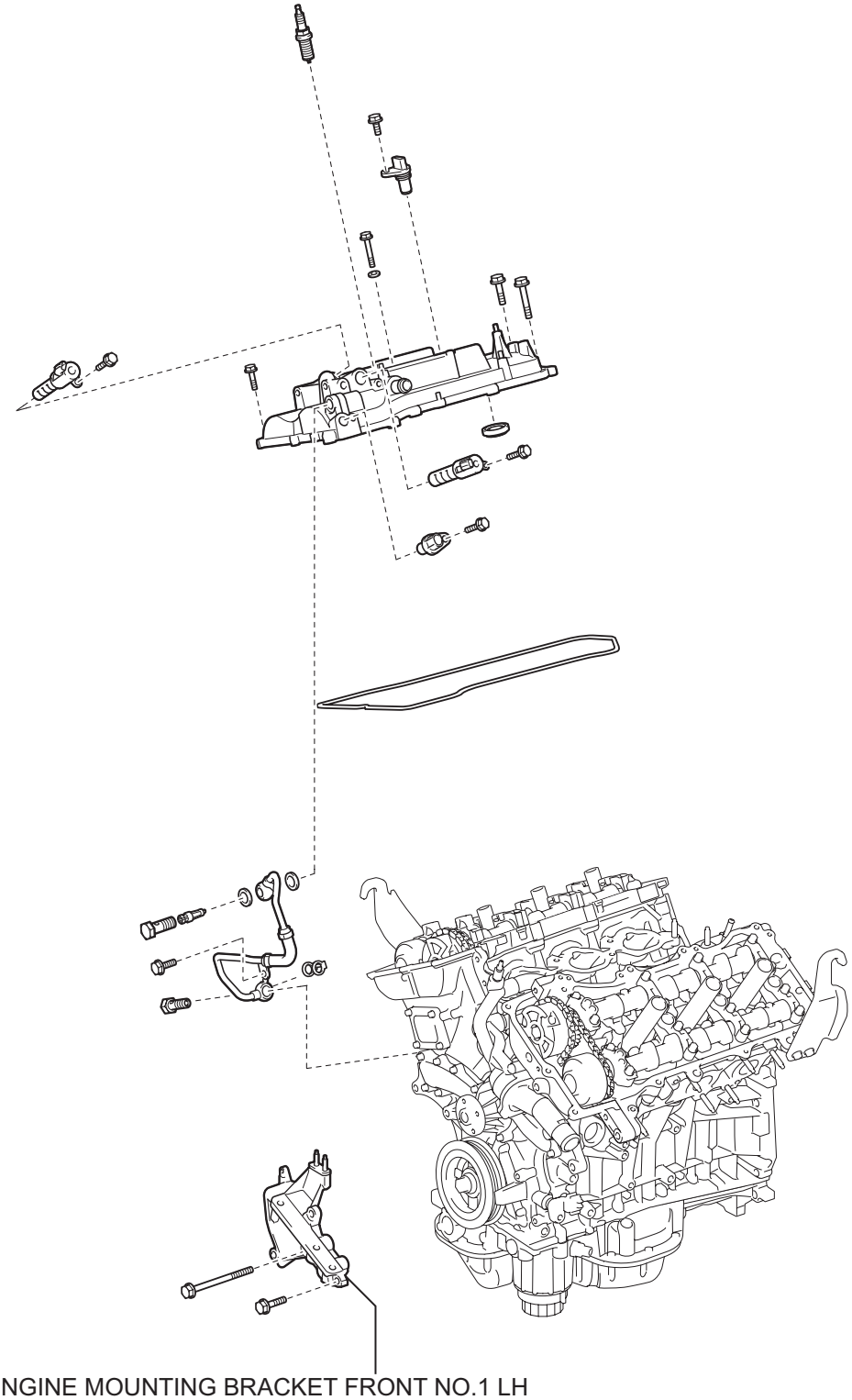

P

A118978E03

EM

REMOVAL

1. **PREVENT GASOLINE FROM SPILLING OUT**
2. **REMOVE FRONT WHEELS**
3. **REMOVE ENGINE UNDER COVER RH**
4. **REMOVE ENGINE UNDER COVER LH**
5. **REMOVE FRONT FENDER APRON SEAL RH**
6. **DRAIN ENGINE OIL**
7. **DRAIN ENGINE COOLANT (See page CO-7)**
8. **DRAIN AUTOMATIC TRANSAXLE FLUID**
9. **REMOVE WINDSHIELD WIPER LINK ASSEMBLY (See page WW-38)**
10. **REMOVE COWL TOP PANEL OUTER (See page BR-20)**
11. **REMOVE BATTERY**
12. **REMOVE V-BANK COVER SUB-ASSEMBLY**
    (a) Disconnect the 3 clips, and remove the cover.
13. **REMOVE FAN AND GENERATOR V BELT**
    HINT:
    Remove V-ribbed belt (See page EM-7).
    SST 09249-63010
14. **REMOVE RADIATOR RESERVE TANK ASSEMBLY**
15. **REMOVE ENGINE MOVING CONTROL ROD**
    (a) Remove the 3 bolts, mounting stay No. 3 RH and moving control rod.

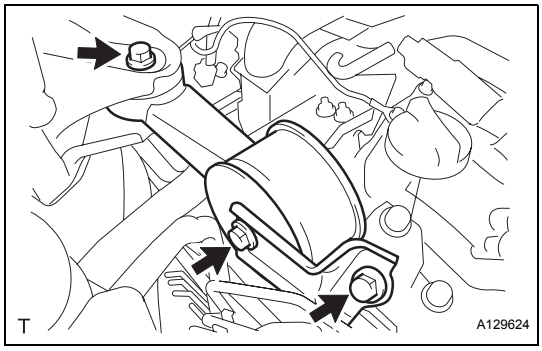

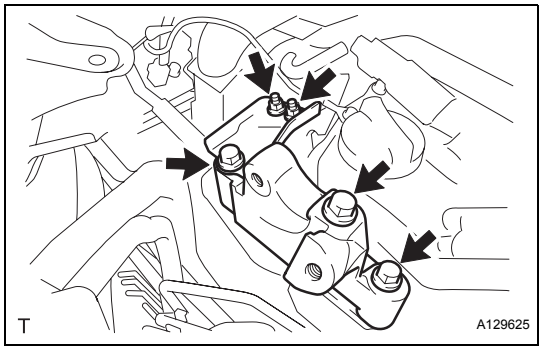

16. **REMOVE ENGINE MOUNTING CONTROL BRACKET**
    (a) Remove the 3 bolts and 2 nuts, mounting stay No. 2 RH and mounting control bracket.
17. **REMOVE AIR CLEANER INLET NO.2**
    (a) Remove the 2 bolts and air cleaner inlet No. 2.
18. **REMOVE AIR CLEANER ASSEMBLY WITH HOSE**
    (a) Disconnect the 3 vacuum hoses and ventilation hose No. 2.
    (b) Disconnect the MAF meter connector and clamp.
    (c) Remove the hose clamp, 3 clips and air cleaner cap.
    (d) Remove the 3 bolts and air cleaner case.
19. **REMOVE AIR CLEANER INLET NO.1**
    (a) Remove the bolt and air cleaner inlet No. 1.

20. **REMOVE INTAKE AIR RESONATOR SUB-ASSEMBLY**
    (a) Remove the clip, bolt and intake air resonator.

21. **REMOVE INTAKE AIR SURGE TANK (See page FU-12)**

22. **SEPARATE FUEL TUBE SUB-ASSEMBLY**
    (a) Remove the fuel pipe clamp No. 1.

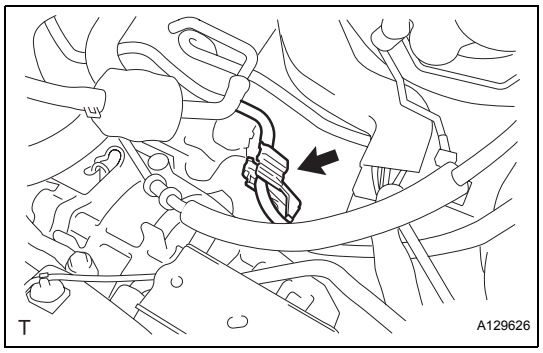

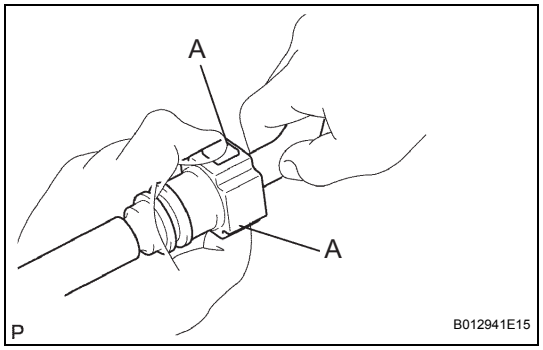

    (b) Disconnect the connector from the tube while pinching part A with your fingers as shown in the illustration.
    NOTICE:
    - **Check for contamination in the pipe and around the connector. Clean if necessary and then disconnect the connector.**
    - **Disconnect the connector by hand.**
    - **Do not bend, fold or rotate the nylon tube.**
    - **If the pipe and connector are stuck together, push and pull the connector until it comes free.**
    - **Put the pipe and connector ends in vinyl bags to prevent damage and contamination.**

23. **REMOVE RADIATOR HOSE INLET**

24. **REMOVE RADIATOR HOSE OUTLET**

25. **DISCONNECT OIL COOLER INLET HOSE**

26. **DISCONNECT OIL COOLER OUTLET HOSE**

27. **DISCONNECT HEATER WATER INLET HOSE A**

28. **DISCONNECT HEATER WATER OUTLET HOSE A**

29. **REMOVE RELAY BLOCK COVER UPPER**

30. **REMOVE FRONT DOOR SCUFF PLATE RH (See page IR-12)**

31. **REMOVE COWL SIDE TRIM SUB-ASSEMBLY RH (See page IR-12)**

32. **REMOVE INSTRUMENT PANEL FINISH LOWER PANEL RH (See page IP-11)**

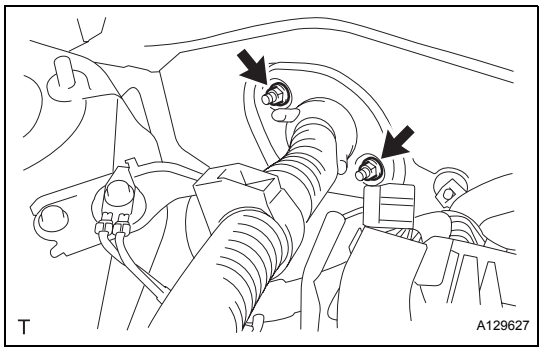

33. DISCONNECT ENGINE WIRE

(a) Remove the 2 nuts and engine wire from the body.

(b) Disconnect the engine wire from the ECM and passenger side J/B.

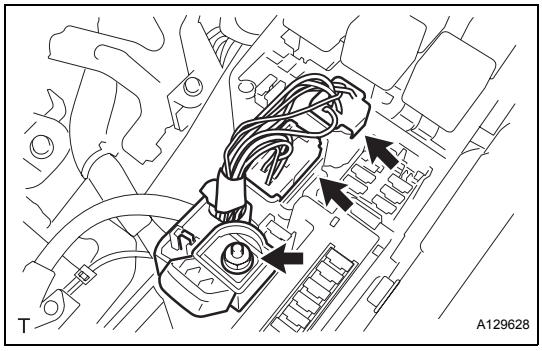

(c) Disconnect the engine wire from the engine room J/B.

(1) Remove the nut and separate the wire harness.

(2) Using a screwdriver, unlock the engine room J/B. Pull the engine room J/B upward.

(3) Disconnect the engine wire connectors.

(d) Pull out the engine wire.

(e) Remove the body ground.

34. DISCONNECT TRANSMISSION CONTROL CABLE ASSEMBLY (See page AX-146)

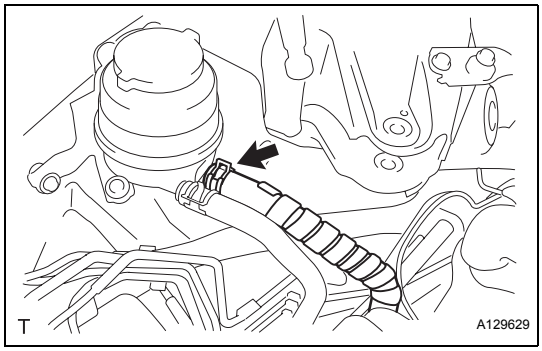

35. DISCONNECT OIL RESERVOIR TO PUMP HOSE NO.1

(a) Disconnect the oil reservoir to pump hose No. 1.

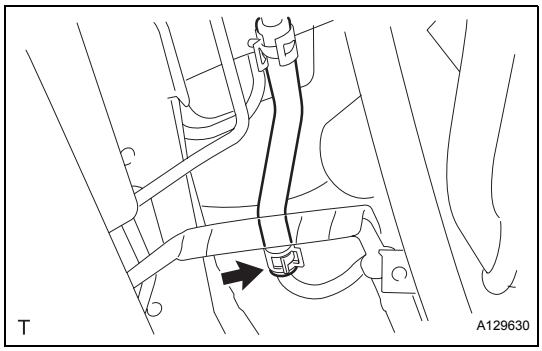

36. DISCONNECT STEERING GEAR OUTLET RETURN TUBE

(a) Disconnect the steering gear outlet return tube.

37. REMOVE EXHAUST PIPE NO.1 SUPPORT BRACKET (See page EX-2)

38. REMOVE EXHAUST PIPE ASSEMBLY FRONT (See page EX-2)

39. DISCONNECT FRONT STABILIZER LINK ASSEMBLY LH

(a) Using a 6 mm socket hexagon wrench, hold the ball stud.

(b) Remove the nut and disconnect the stabilizer link.

40. DISCONNECT FRONT STABILIZER LINK ASSEMBLY RH

HINT:

Use the same procedures described for the LH side.

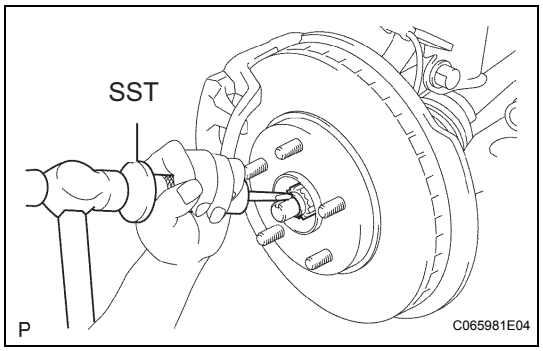

41. REMOVE FRONT AXLE HUB LH NUT

(a) Using SST and a hammer, strike the lock nut covering to remove it.
SST 09930-00010
NOTICE:
- **Set the drive shaft's groove so that it faces up. Then use the SST and a hammer.**
- **Remove the covering from the lock nut completely. Otherwise the screw of the drive shaft may be damaged.**
- **Do not sharpen the tip of the SST.**

(b) Using a 30 mm socket wrench, remove the lock nut.

42. REMOVE FRONT AXLE HUB RH NUT

HINT:
Use the same procedures described for the LH side.

43. DISCONNECT SPEED SENSOR FRONT LH

(a) Remove the bolt and disconnect the speed sensor from the steering knuckle.
NOTICE:
Keep the speed sensor tip and connection free of foreign matter.

44. DISCONNECT SPEED SENSOR FRONT RH

HINT:
Use the same procedures described for the LH side.

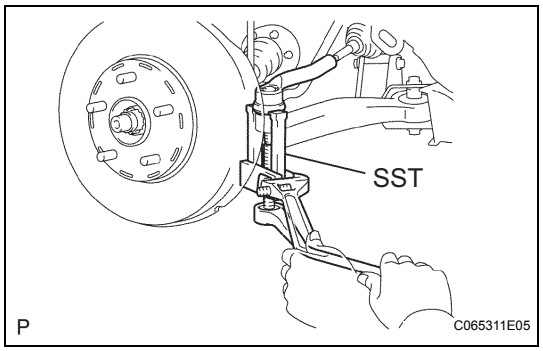

45. DISCONNECT TIE ROD ASSEMBLY LH

(a) Remove the cotter pin and nut.
(b) Using SST, disconnect the tie rod end from the steering knuckle.
SST 09628-62011
NOTICE:
Do not damage the dust cover of the ball joint.

46. DISCONNECT TIE ROD ASSEMBLY RH

HINT:
Use the same procedures described for the LH side.

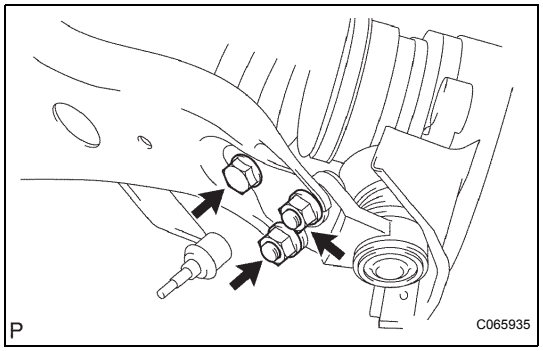

47. DISCONNECT FRONT SUSPENSION ARM SUB-ASSEMBLY LOWER NO.1 LH

(a) Remove the bolt and 2 nuts, and separate the front suspension arm from the lower ball joint.
(b) Using a plastic hammer, disconnect the drive shaft from the axle hub.

48. DISCONNECT FRONT SUSPENSION ARM SUB-ASSEMBLY LOWER NO.1 RH

HINT:
Use the same procedures described for the LH side.

49. REMOVE EXHAUST PIPE SUPPORT BRACKET NO.1 (See page EX-2)

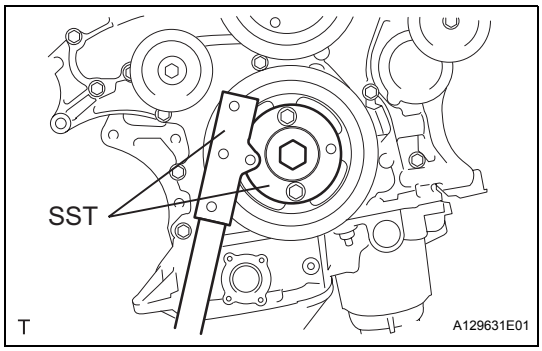

50. REMOVE DRIVE PLATE AND TORQUE CONVERTER CLUTCH SETTING BOLT

(a) Using SST, hold the crankshaft.
SST 09213-70011 (09213-70020), 09330-00021

(b) Remove the 2 bolts and flywheel housing under cover.

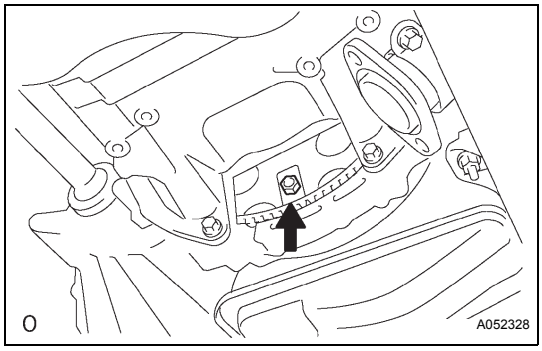

(c) Remove the 6 torque converter setting bolts.

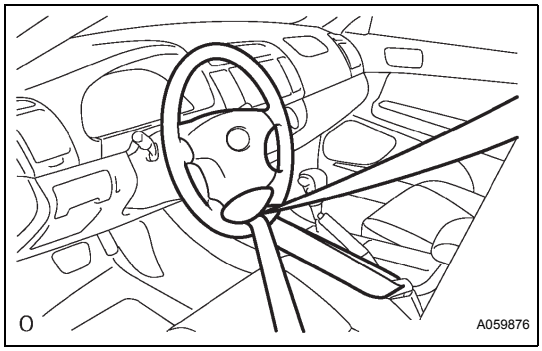

51. DISCONNECT STEERING INTERMEDIATE SHAFT ASSEMBLY

(a) To prevent the steering wheel from rotating, fix the wheel with the seat belt.
NOTICE:
If the steering wheel is not fixed, the spiral cable will be damaged.

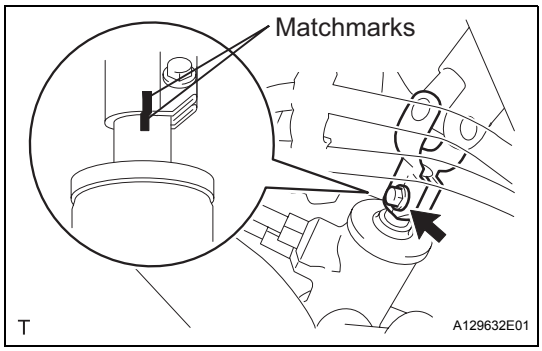

(b) Put matchmarks on the steering intermediate shaft and control valve shaft.

(c) Remove the bolt and disconnect the steering intermediate shaft.

52. REMOVE GENERATOR ASSEMBLY (See page CH-9)

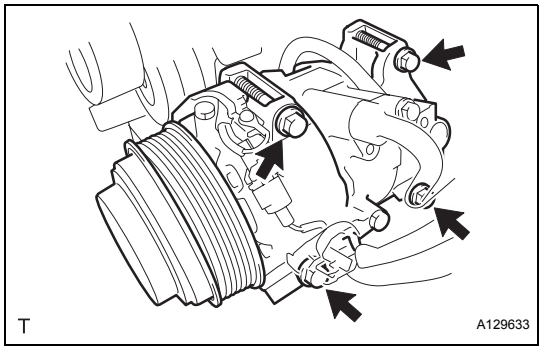

53. SEPARATE COOLER COMPRESSOR ASSEMBLY

(a) Remove the 2 connector clamps.

(b) Remove the 4 bolts and separate the compressor.
HINT:
Hang up the hoses instead of detaching them.

54. REMOVE ENGINE ASSEMBLY WITH TRANSAXLE

(a) Set the engine lifter.

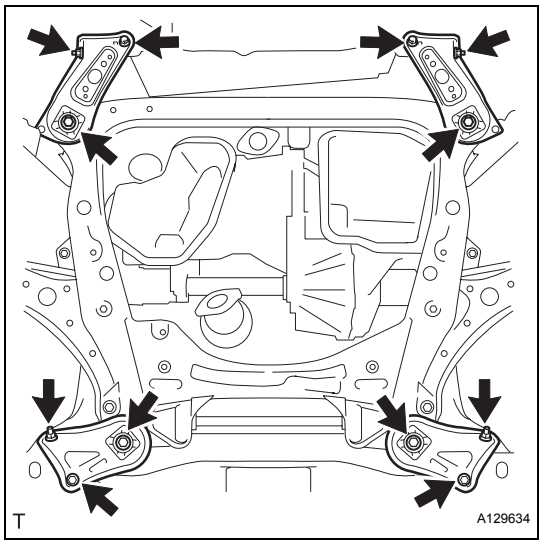

(b) Remove the 4 bolts, 2 nuts, frame side rail plate RH and LH.
(c) Remove the 4 bolts, 2 nuts, front suspension member brace rear RH and LH.
(d) Operate the engine lifter, then remove the engine assembly from the vehicle.
NOTICE:
Make sure the engine is clear of all wiring and hoses.

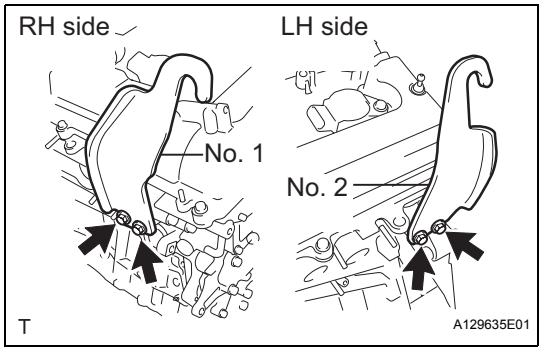

(e) Install the 2 engine hangers with the 4 bolts as shown in the illustration.
Part NO.:
Engine hanger No. 1 12281-31070
Engine hanger No. 2 12282-31050
Bolts 91671-10825
Torque: 33 N*m (337 kgf*cm, 24 ft.*lbf)
(f) Attach the engine sling device and hang the engine with the chain block.

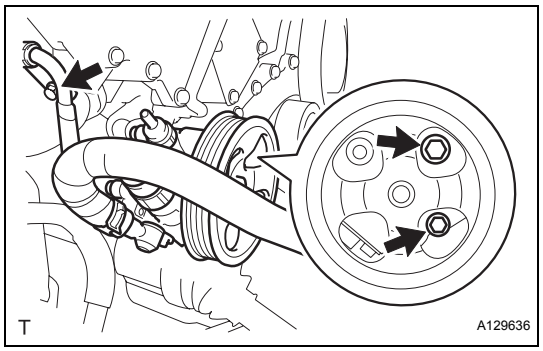

55. REMOVE VANE PUMP ASSEMBLY
(a) Remove the pressure feed tube clamp bolt.
(b) Remove the 2 bolts, nut and vane pump.

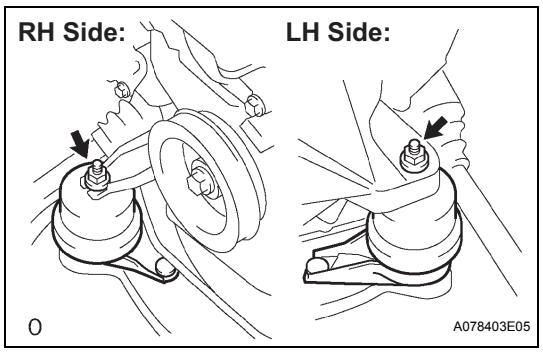

56. REMOVE FRONT FRAME ASSEMBLY
(a) Remove the 2 nuts and disconnect the engine mounting insulators RH and LH.

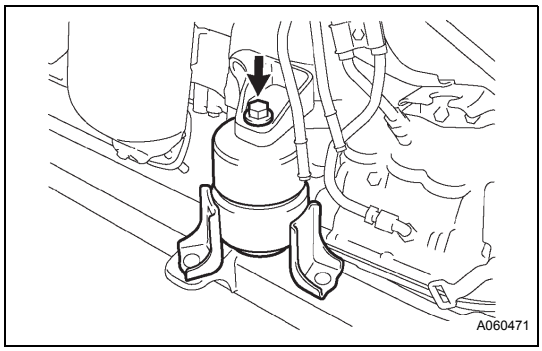

(b) Remove the bolt and disconnect the engine mounting insulator FR.

57. REMOVE FRONT DRIVE SHAFT ASSEMBLY LH (See page DS-6)

58. REMOVE FRONT DRIVE SHAFT ASSEMBLY RH (See page DS-7)

59. REMOVE ENGINE WIRE

60. REMOVE STARTER ASSEMBLY (See page ST-72)

61. REMOVE AUTOMATIC TRANSAXLE ASSEMBLY (See page AX-158)

62. REMOVE DRIVE PLATE AND RING GEAR SUB-ASSEMBLY
SST 09213-70011 (09213-70020), 09330-00021

63. INSTALL ENGINE STAND

64. REMOVE IGNITION COIL ASSEMBLY
(a) Remove the 6 bolts and 6 ignition coils.

65. REMOVE ENGINE MOUNTING STAY NO.2 RH
(a) Remove the bolt and mounting stay No. 2 RH.

66. REMOVE INTAKE MANIFOLD

67. REMOVE EXHAUST MANIFOLD SUB-ASSEMBLY RH
(a) Disconnect the A/F sensor connector clamp.
(b) Uniformly loosen and remove the 6 nuts.
(c) Remove the manifold and gasket.

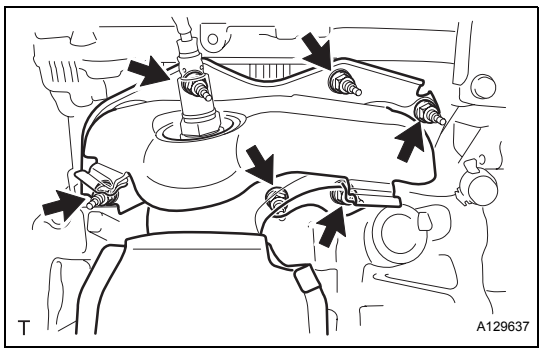

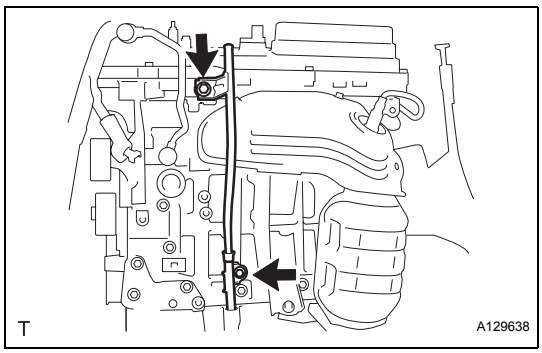

68. REMOVE OIL LEVEL GAUGE GUIDE SUB-ASSEMBLY
(a) Remove the oil level gauge.
(b) Remove the 2 bolts, oil level gauge guides No. 1 and No. 2.
(c) Remove the O-rings from the oil level gauge guide.

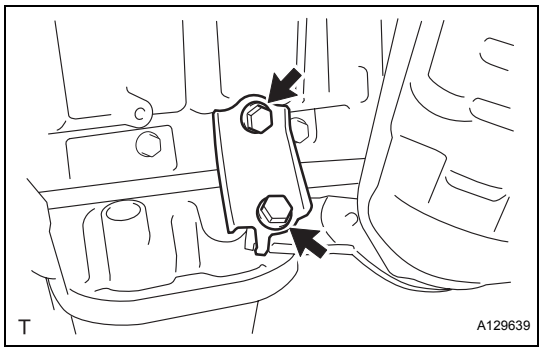

69. REMOVE MANIFOLD STAY NO.2

(a) Remove the 2 bolts and manifold stay No. 2.

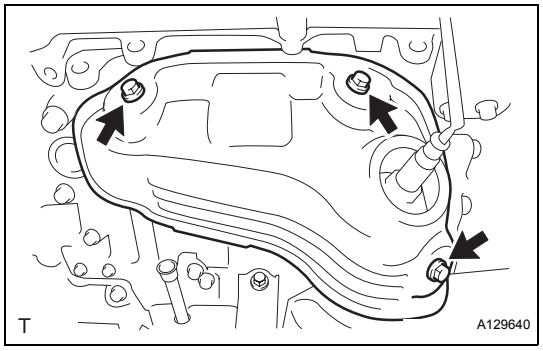

70. REMOVE EXHAUST MANIFOLD HEAT INSULATOR NO.2

(a) Remove the 3 bolts and insulator No. 2.

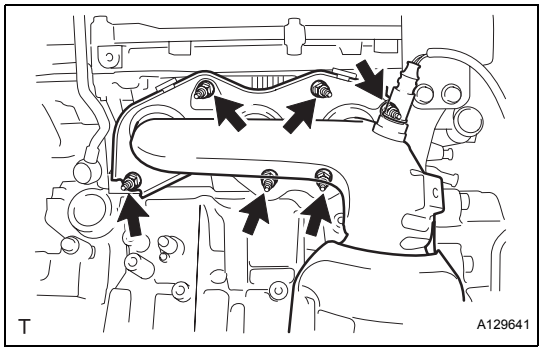

71. REMOVE EXHAUST MANIFOLD SUB-ASSEMBLY LH

(a) Uniformly loosen and remove the 6 nuts.
(b) Remove the manifold and gasket.

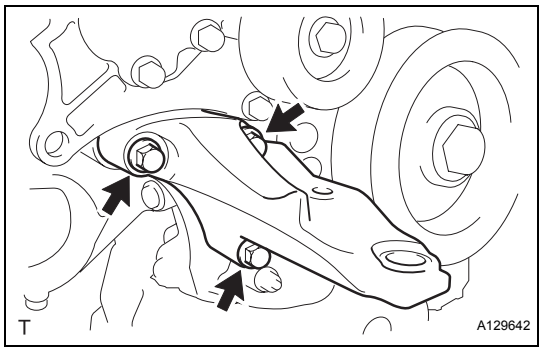

72. REMOVE ENGINE MOUNTING BRACKET RH

(a) Remove the 3 bolts and engine mounting bracket RH.

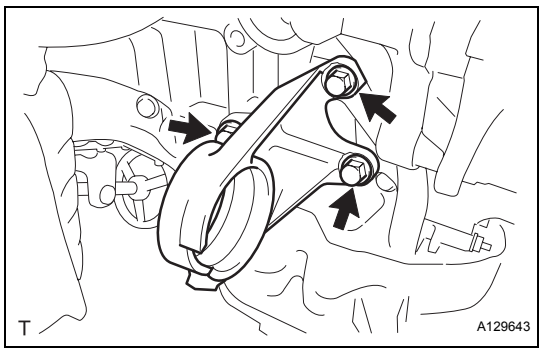

73. REMOVE DRIVE SHAFT BEARING BRACKET

(a) Remove the 3 bolts and drive shaft bearing bracket.

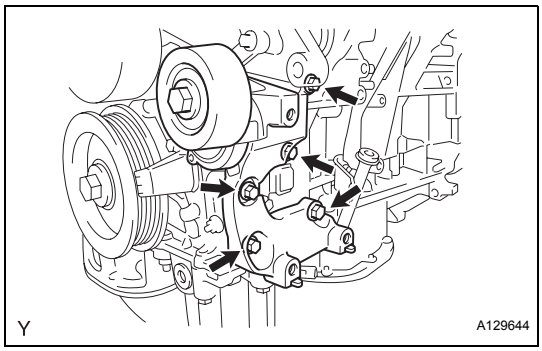

74. REMOVE V-RIBBED BELT TENSIONER ASSEMBLY

(a) Remove the 5 bolts and V-ribbed belt tensioner assembly.

75. REMOVE TIMING GEAR COVER NO.2

(a) Remove the 2 bolts and timing gear cover No. 2.

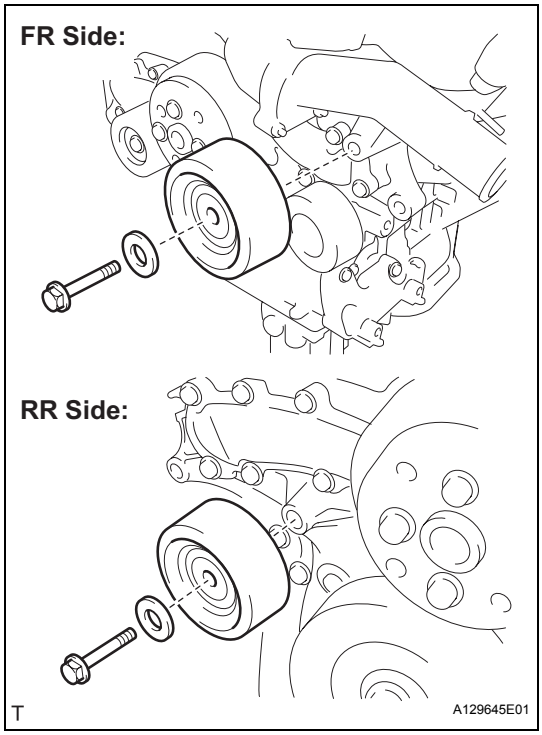

76. REMOVE IDLER PULLEY SUB-ASSEMBLY NO.2

(a) Remove the bolt, plate and idler pulley sub-assembly No. 2.

77. REMOVE WATER PUMP PULLEY (See page CO-17)

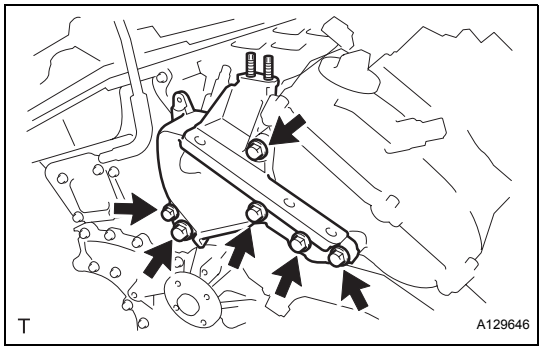

78. REMOVE ENGINE MOUNTING BRACKET FRONT NO.1 LH

(a) Remove the 6 bolts and engine mounting bracket front No. 1 LH.

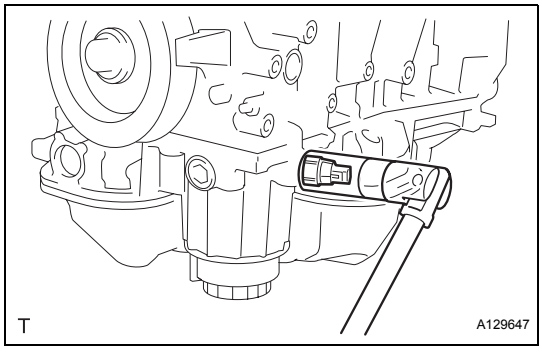

79. REMOVE ENGINE OIL PRESSURE SWITCH ASSEMBLY

(a) Using a 24 mm deep socket wrench, remove the engine oil pressure switch assembly.

80. REMOVE KNOCK CONTROL SENSOR

(a) Remove 2 bolts and 2 sensors.

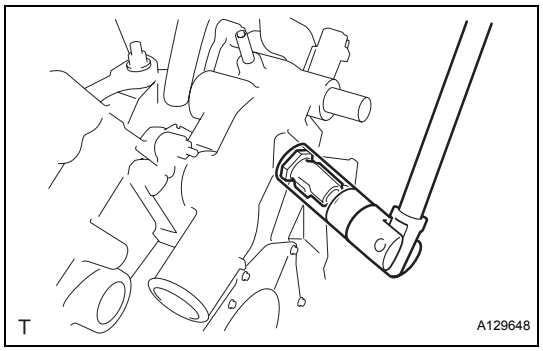

81. **REMOVE E.F.I. ENGINE COOLANT TEMPERATURE SENSOR**
    (a) Using a 19 mm deep socket wrench, remove the EFI engine coolant temperature sensor and gasket.

82. **REPLACE PARTIAL ENGINE ASSEMBLY**

INSTALLATION

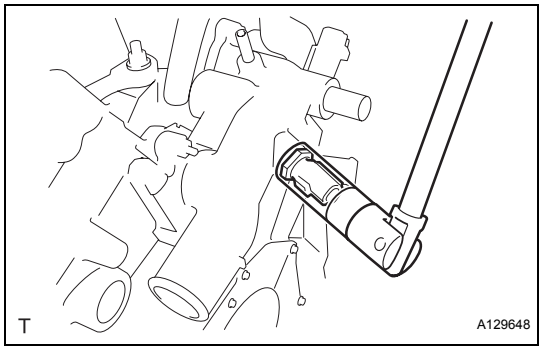

1. **INSTALL E.F.I. ENGINE COOLANT TEMPERATURE SENSOR**
    (a) Using a 19 mm deep socket wrench, install the EFI engine coolant temperature sensor and a new gasket.
    Torque: 20 N*m (200 kgf*cm, 14 ft.*lbf)

2. **INSTALL KNOCK CONTROL SENSOR (See page ES-438)**

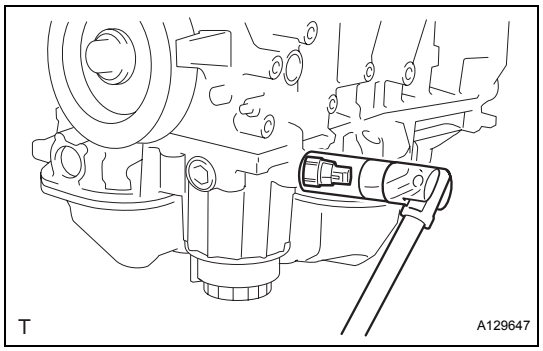

3. **INSTALL ENGINE OIL PRESSURE SWITCH ASSEMBLY**
    (a) Clean the threads of the oil pressure switch. Apply adhesive to 2 or 3 threads of the oil pressure switch.
    Adhesive:
    Part No. 08833-00080 THREE BOND 1344, LOCTITE 242 or equivalent
    (b) Using a 24 mm deep socket wrench install the oil pressure switch.
    Torque: 21 N*m (214 kgf*cm, 15 ft.*lbf)

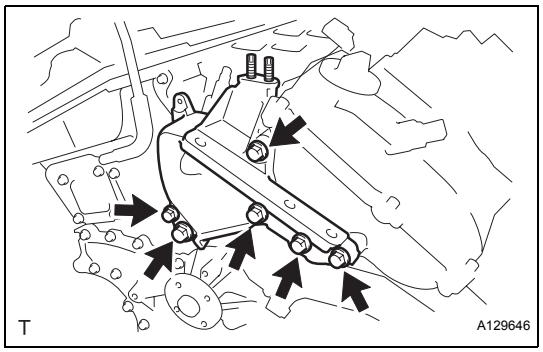

4. **INSTALL ENGINE MOUNTING BRACKET FRONT NO.1 LH**
    (a) Install the engine mounting bracket front No. 1 LH with the 6 bolts.
    Torque: 54 N*m (551 kgf*cm, 40 ft.*lbf)

5. **INSTALL WATER PUMP PULLEY (See page CO-18)**

EM

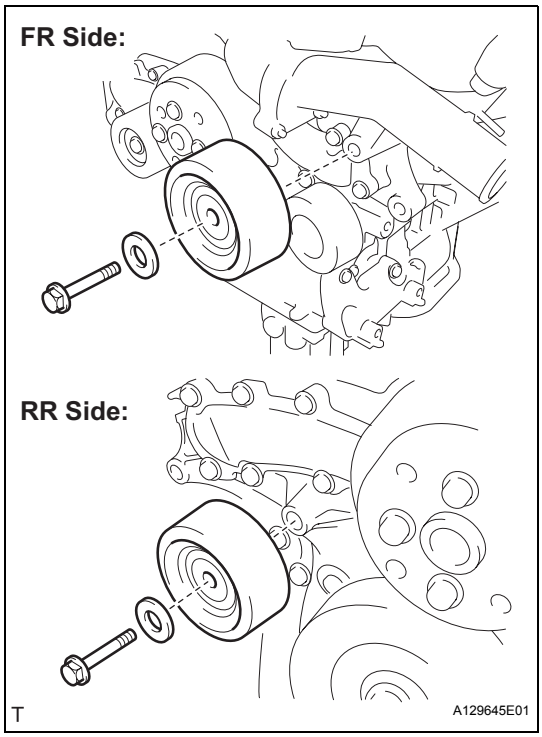

6. INSTALL IDLER PULLEY SUB-ASSEMBLY NO.2

(a) Install the idler pulley sub-assembly No. 2 and cover plate with the bolt.
Torque: 43 N*m (438 kgf*cm, 32 ft.*lbf)

7. INSTALL TIMING GEAR COVER NO.2

(a) Install the timing gear cover No. 2 with the 2 bolts.
Torque: 6.0 N*m (61 kgf*cm, 53 in.*lbf)

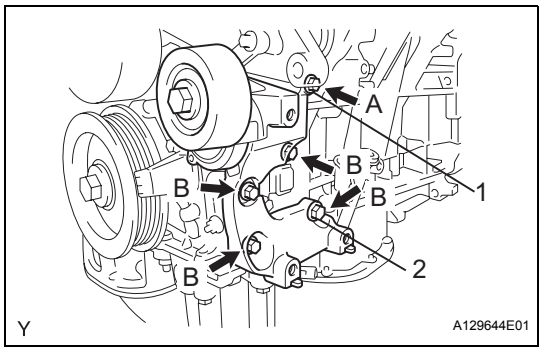

8. INSTALL V-RIBBED BELT TENSIONER ASSEMBLY

(a) Temporarily install the V-ribbed belt tensioner with the 5 bolts.

(b) Install the V-ribbed belt tensioner by tightening the bolt 1 and bolt 2 in the order shown in the illustration.
Torque: 43 N*m (438 kgf*cm, 32 ft.*lbf)

(c) Tighten the other bolts.
Torque: 43 N*m (438 kgf*cm, 32 ft.*lbf)
HINT:
Each bolt length is as follows:
A: 70 mm (2.76 in.)
B: 33 mm (1.30 in.)

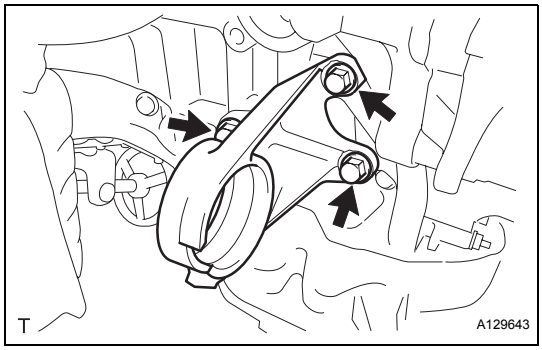

9. INSTALL DRIVE SHAFT BEARING BRACKET

(a) Install the drive shaft bearing bracket with the 3 bolts.
Torque: 64 N*m (650 kgf*cm, 47 ft.*lbf)

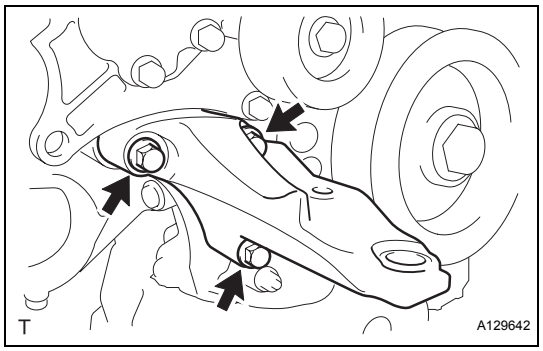

10. INSTALL ENGINE MOUNTING BRACKET RH

(a) Install the engine mounting bracket RH with the 3 bolts.
Torque: 54 N*m (551 kgf*cm, 40 ft.*lbf)

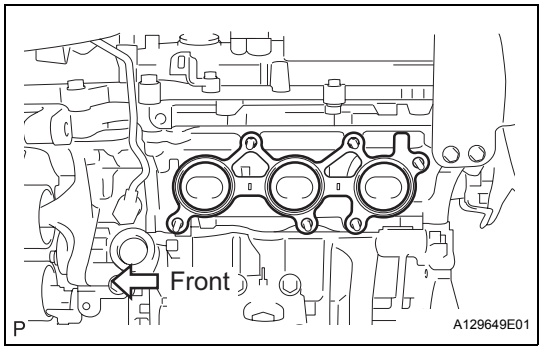

11. INSTALL EXHAUST MANIFOLD SUB-ASSEMBLY LH

(a) Install a new gasket as shown in the illustration.
(b) Install the exhaust manifold sub-assembly RH with the 6 nuts.
Torque: 21 N*m (214 kgf*cm, 15 ft.*lbf)

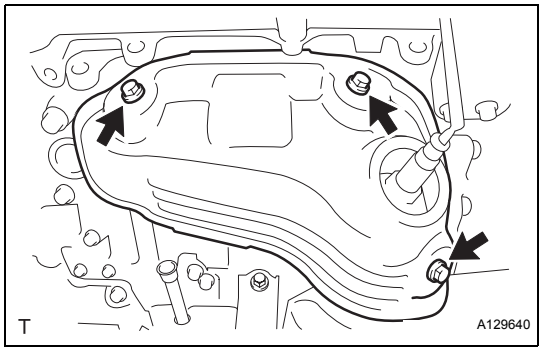

12. INSTALL EXHAUST MANIFOLD HEAT INSULATOR NO.2

(a) Install the insulator No. 2 with the 3 bolts.
Torque: 8.5 N*m (87 kgf*cm, 75 in.*lbf)

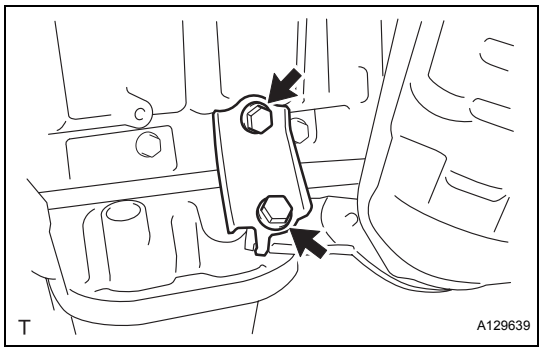

13. INSTALL MANIFOLD STAY NO.2

(a) Install the manifold stay No. 2 with the 2 bolts.
Torque: 34 N*m (347 kgf*cm, 25 ft.*lbf)

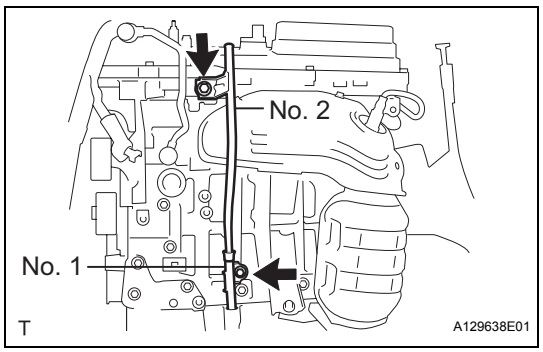

14. INSTALL OIL LEVEL GAUGE GUIDE SUB-ASSEMBLY

(a) Install 2 new O-rings to the oil level gauge guide.
(b) Apply a coat of engine oil lightly to the O-rings.
(c) Push in the oil level gauge guide end into the guide hole.
(d) Install the oil level gauge guide No. 1 with the bolt.
Torque: 21 N*m (214 kgf*cm, 15 ft.*lbf)
(e) Install the oil level gauge guide No. 2 with the bolt.
Torque: 21 N*m (214 kgf*cm, 15 ft.*lbf)
(f) Install the oil level gauge.

EM

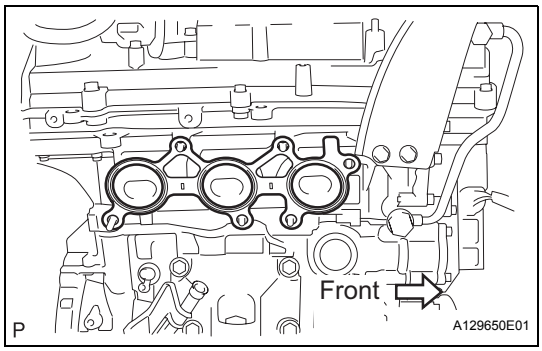

15. **INSTALL EXHAUST MANIFOLD SUB-ASSEMBLY RH**
    (a) Install a new gasket as shown in the illustration.
    (b) Install the exhaust manifold sub-assembly RH with the 6 nuts.
    Torque: 21 N*m (214 kgf*cm, 15 ft.*lbf)
16. **INSTALL INTAKE MANIFOLD**
17. **INSTALL ENGINE MOUNTING STAY NO.2 RH**
    (a) Install the mounting stay No. 2 RH with the bolt.
    Torque: 21 N*m (214 kgf*cm, 15 ft.*lbf)
18. **INSTALL IGNITION COIL ASSEMBLY**
    (a) Install the 6 ignition coil assembly with the 6 bolts.
    Torque: 10 N*m (102 kgf*cm, 7 in.*lbf)
19. **INSTALL DRIVE PLATE AND RING GEAR SUB-ASSEMBLY**
    SST 09213-70011, 09330-00021
20. **INSTALL AUTOMATIC TRANSAXLE ASSEMBLY (See page AX-160)**
21. **INSTALL STARTER ASSEMBLY (See page ST-79)**
22. **INSTALL ENGINE WIRE**
23. **INSTALL FRONT DRIVE SHAFT ASSEMBLY RH (See page DS-13)**
24. **INSTALL FRONT DRIVE SHAFT ASSEMBLY LH (See page DS-13)**
25. **INSTALL FRONT FRAME ASSEMBLY**
    (a) Install the engine mounting insulators RH and LH with the 2 nuts.
    Torque: 95 N*m (969 kgf*cm, 70 ft.*lbf)

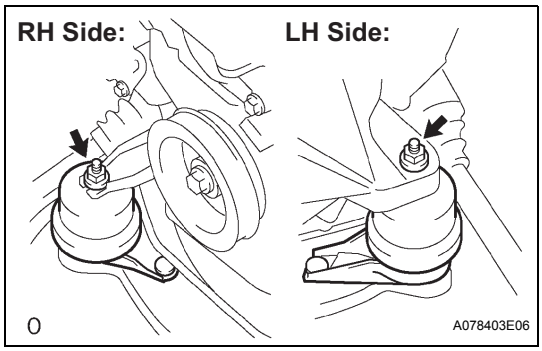

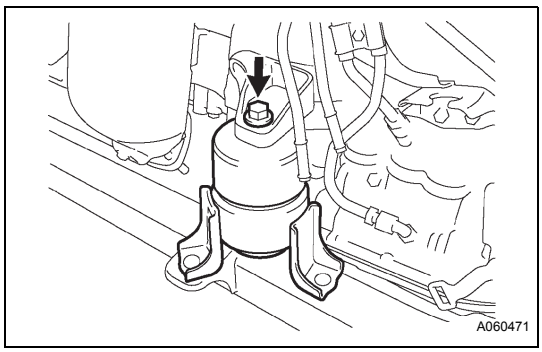

(b) Install the engine mounting insulator FR with the bolt.
Torque: 87 N*m (887 kgf*cm, 64 ft.*lbf)

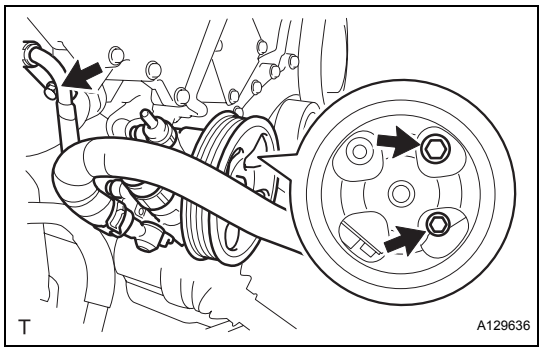

26. INSTALL VANE PUMP ASSEMBLY

(a) Install the vane pump with the 2 bolts and nut.
Torque: 43 N*m (438 kgf*cm, 32 ft.*lbf)

(b) Install the pressure feed tube clamp bolt.
Torque: 9.8 N*m (100 kgf*cm, 87 in.*lbf)

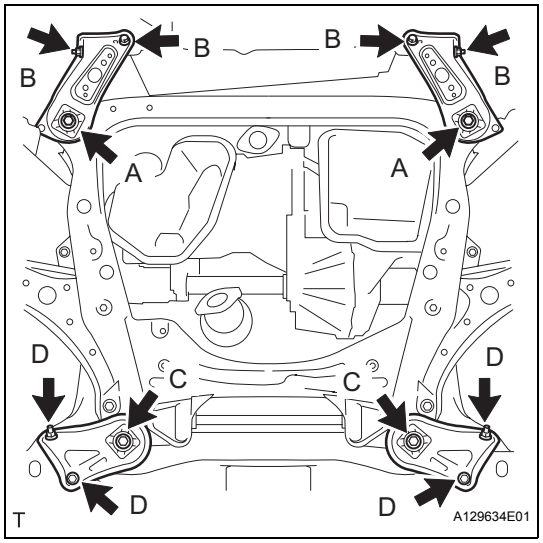

27. INSTALL ENGINE ASSEMBLY WITH TRANSAXLE

(a) Set the engine assembly with transaxle on the engine lifter.

(b) Install the engine assembly to the vehicle.

(c) Install the frame side rail plates RH and LH with the 4 bolts and 2 nuts.
Torque: A
85 N*m (867 kgf*cm, 63 ft.*lbf)
B
32 N*m (329 kgf*cm, 24 ft.*lbf)

(d) Install the front suspension member brace rears RH and LH with the 4 bolts and 2 nuts.
Torque: C
85 N*m (867 kgf*cm, 63 ft.*lbf)
D
32 N*m (329 kgf*cm, 24 ft.*lbf)

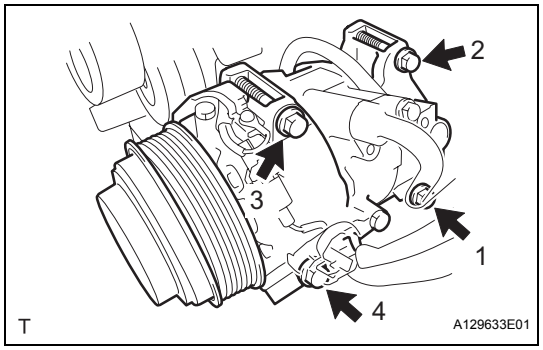

28. INSTALL COOLER COMPRESSOR ASSEMBLY

(a) Temporarily install the cooler compressor with the 4 bolts.

(b) Install the compressor with the 4 bolts by tightening the bolt in the order shown in the illustration.
Torque: 25 N*m (250 kgf*cm, 18 ft.*lbf)

(c) Install the 2 connector clamps.

29. INSTALL GENERATOR ASSEMBLY (See page CH-15)

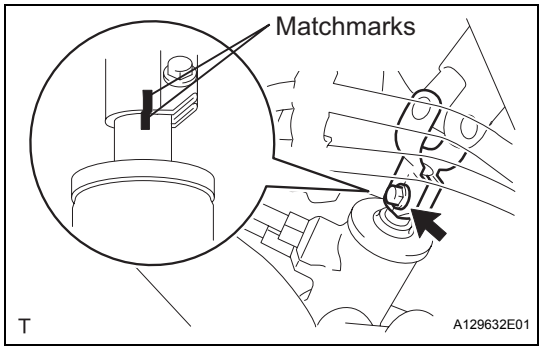

30. INSTALL STEERING INTERMEDIATE SHAFT ASSEMBLY

(a) Align the matchmarks on the intermediate shaft and control valve shaft, and install the bolt.
Torque: 35 N*m (360 kgf*cm, 26 ft.*lbf)

EM

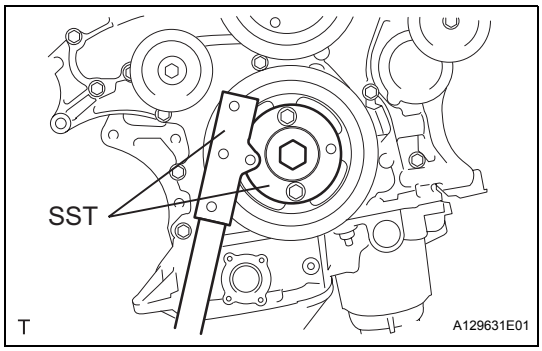

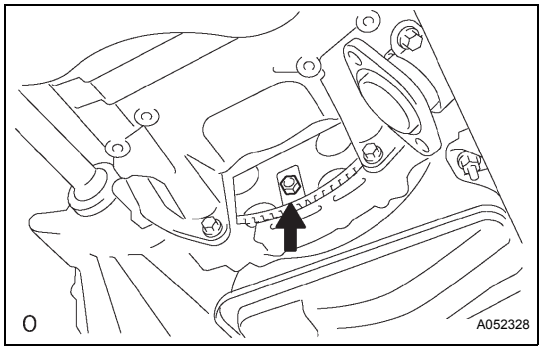

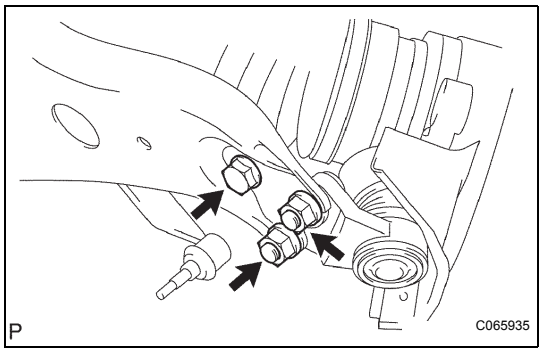

31. INSTALL DRIVE PLATE AND TORQUE CONVERTER CLUTCH SETTING BOLT

(a) Using SST, hold the crankshaft.
SST 09213-70011 (09213-70020), 09330-00021

(b) Using kerosene or gasoline, clean the bolts thoroughly.

(c) Apply adhesive to 2 or 3 threads of the bolt end.
Adhesive:
Part No. 08833-00070, THREE BOND 1324 or equivalent

(d) Install the 6 torque converter set bolts.
Torque: 41 N*m (413 kgf*cm, 30 ft.*lbf)
NOTICE:
First tighten the green colored bolt, then the other 5 bolts.

(e) Install the flywheel housing under cover with the 2 bolts.
Torque: 7.8 N*m (80 kgf*cm, 69 in.*lbf)

32. INSTALL EXHAUST PIPE SUPPORT BRACKET NO.1

(a) Install the exhaust pipe support bracket No. 1 with the 2 bolts.
Torque: 21 N*m (214 kgf*cm, 15 ft.*lbf)

33. INSTALL FRONT SUSPENSION ARM SUB-ASSEMBLY LOWER NO.1 LH

(a) Install the drive shaft to the steering knuckle.

(b) Install the suspension lower arm with the bolt and 2 nuts.
Torque: 75 N*m (764 kgf*cm, 55 ft.*lbf)

34. INSTALL FRONT SUSPENSION ARM SUB-ASSEMBLY LOWER NO.1 RH

HINT:
Use the same procedures described for the LH side.

35. INSTALL TIE ROD ASSEMBLY LH

(a) Connect the tie rod end to the steering knuckle with the castle nut.
Torque: 49 N*m (500 kgf*cm, 36 ft.*lbf)
NOTICE:
- **Prevent lubricants from contacting the thread and taper portions.**
- **After tightening the castle nut, tighten additional 60° so that a cotter pin can be inserted.**

(b) Insert a new cotter pin.

36. INSTALL TIE ROD ASSEMBLY RH

HINT:
Use the same procedures described for the LH side.

37. INSTALL SPEED SENSOR FRONT LH (See page DS-14)

38. INSTALL SPEED SENSOR FRONT RH

HINT:

Use the same procedures described for the LH side.

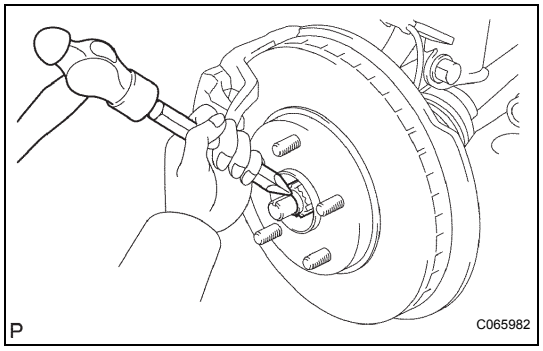

39. INSTALL FRONT AXLE HUB LH NUT

(a) Using a 30 mm socket wrench, install a new hub nut.

Torque: 294 N*m (2,998 kgf*cm, 217 ft.*lbf)

(b) Using a chisel and hammer, tap the hub nut.

40. INSTALL FRONT AXLE HUB RH NUT

HINT:

Use the same procedures described for the LH side.

41. INSTALL FRONT STABILIZER LINK ASSEMBLY LH

(a) Using a 6 mm socket hexagon wrench, hold the ball stud and install the nut.

Torque: 74 N*m (755 kgf*cm, 55 ft.*lbf)

EM

42. INSTALL FRONT STABILIZER LINK ASSEMBLY RH

HINT:

Use the same procedures described for the LH side.

43. INSTALL EXHAUST PIPE ASSEMBLY FRONT (See page EX-3)

44. INSTALL EXHAUST PIPE NO.1 SUPPORT BRACKET (See page EX-4)

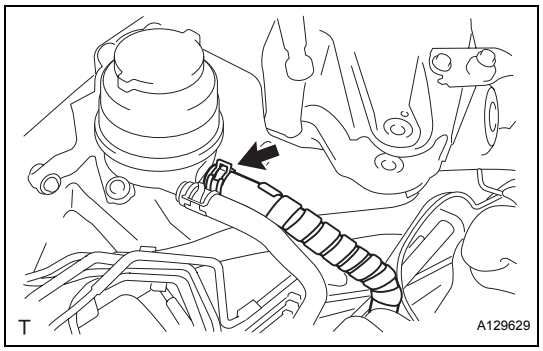

45. CONNECT OIL RESERVOIR TO PUMP HOSE NO.1

(a) Connect the oil reservoir to pump hose No. 1.

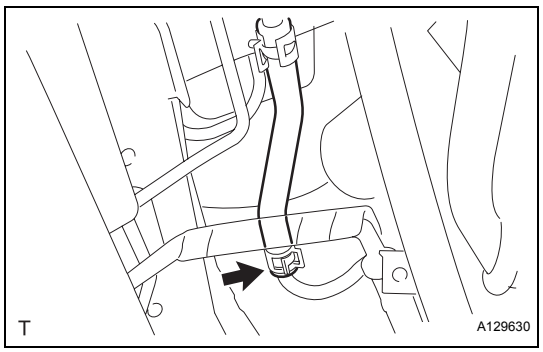

46. CONNECT STEERING GEAR OUTLET RETURN TUBE

(a) Connect the steering gear outlet return tube.

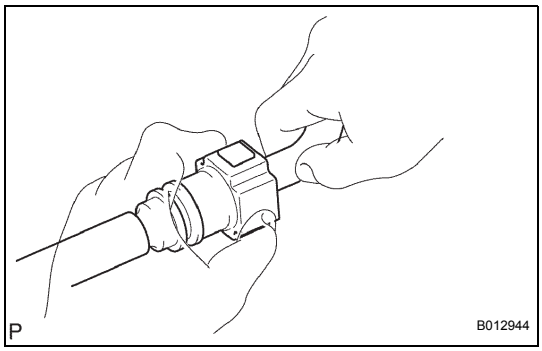

47. CONNECT FUEL TUBE SUB-ASSEMBLY

(a) Push in the fuel tube connector to the fuel pipe until connector makes a "click" sound.
NOTICE:
- **Check for damage or contamination on the connected part of the pipe.**
- **Check if the pipe and the connector are securely connected by trying to pull them apart.**

(b) Install the fuel pipe clamp No. 1.

48. CONNECT TRANSMISSION CONTROL CABLE ASSEMBLY (See page AX-148)

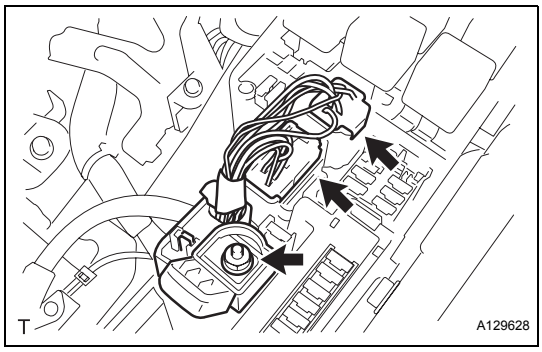

49. CONNECT ENGINE WIRE

(a) Install the nut and connect the wire harness to the engine room J/B.
Torque: 8.4 N*m (85 kgf*cm, 74 in.*lbf)

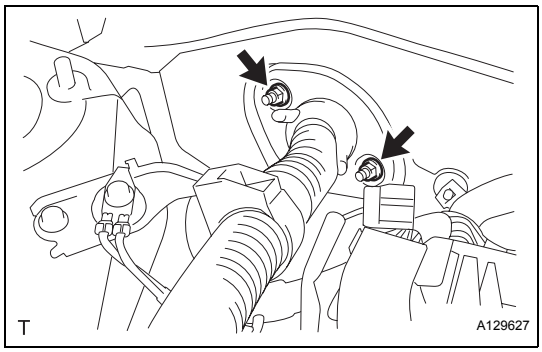

(b) Install the engine wire to the body with the 2 nuts.
Torque: 6.0 N*m (61 kgf*cm, 53 in.*lbf)

50. CONNECT HEATER WATER OUTLET HOSE A

51. CONNECT HEATER WATER INLET HOSE A

52. CONNECT OIL COOLER OUTLET HOSE

53. CONNECT OIL COOLER INLET HOSE

54. INSTALL RADIATOR HOSE OUTLET

55. INSTALL RADIATOR HOSE INLET

56. INSTALL INTAKE AIR SURGE TANK (See page FU-17)

57. INSTALL INTAKE AIR RESONATOR SUB-ASSEMBLY

(a) Install the intake air resonator with the bolt and clip.
Torque: 5.0 N*m (51 kgf*cm, 44 in.*lbf)

58. INSTALL AIR CLEANER INLET NO.1

(a) Install the air cleaner inlet No. 1 with the bolt.
Torque: 5.0 N*m (51 kgf*cm, 44 in.*lbf)

59. INSTALL AIR CLEANER ASSEMBLY WITH HOSE

(a) Install the air cleaner case with the 3 bolts.
Torque: 5.0 N*m (51 kgf*cm, 44 in.*lbf)

(b) Install the air cleaner cap with the hose clamp and 3 clips.

(c) Connect the MAF meter connector and clamp.

(d) Connect the 3 vacuum hoses and ventilation hose No. 2.

60. INSTALL AIR CLEANER INLET NO.2

(a) Install air cleaner inlet No. 2 with the 2 bolts.
Torque: 5.0 N*m (51 kgf*cm, 44 in.*lbf)

61. CONNECT VACUUM HOSES

Vacuum Hose Routing Diagram

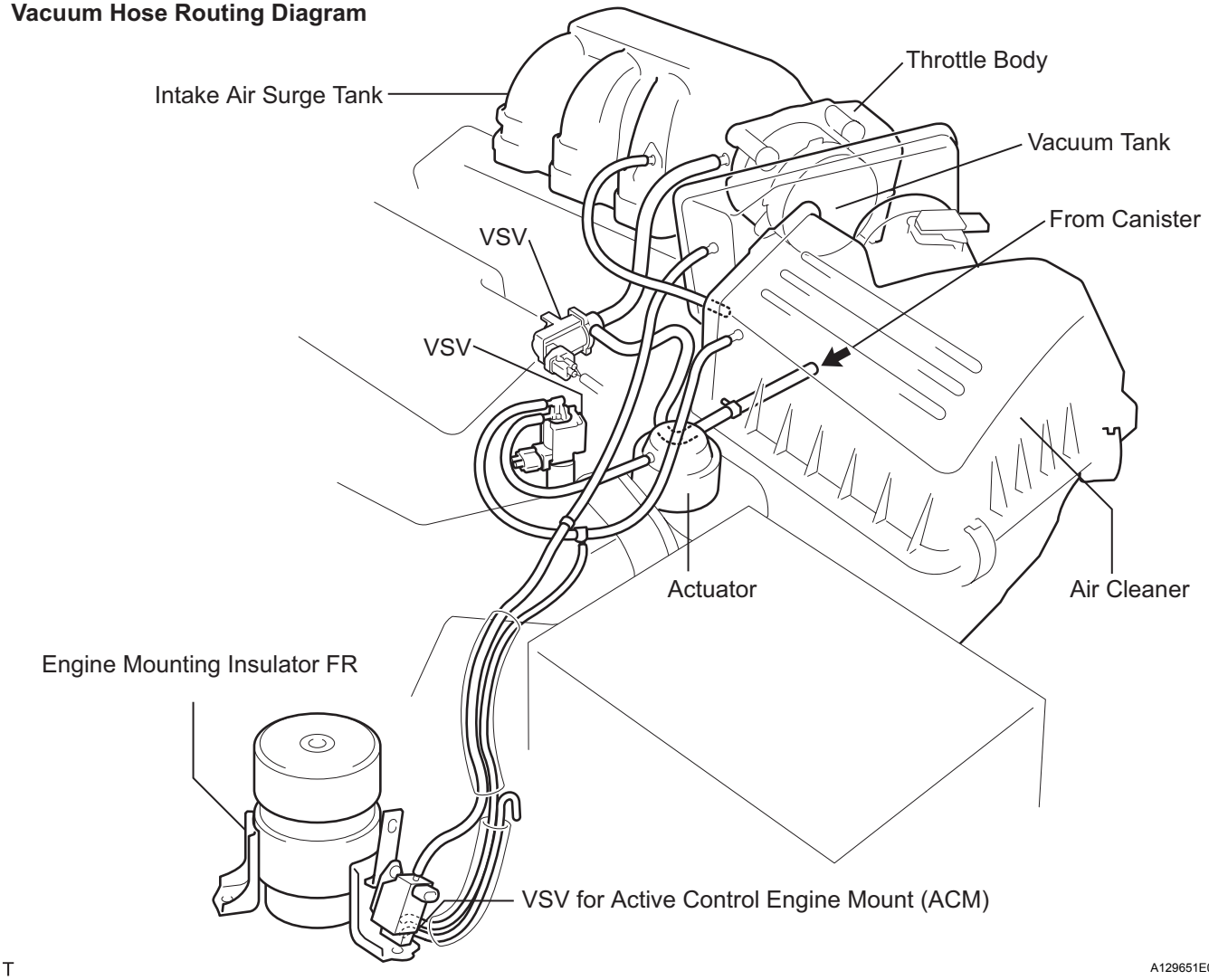

62. INSTALL INSTRUMENT PANEL FINISH LOWER PANEL RH

63. INSTALL COWL SIDE TRIM SUB-ASSEMBLY RH

64. INSTALL FRONT DOOR SCUFF PLATE RH

65. INSTALL RELAY BLOCK COVER UPPER

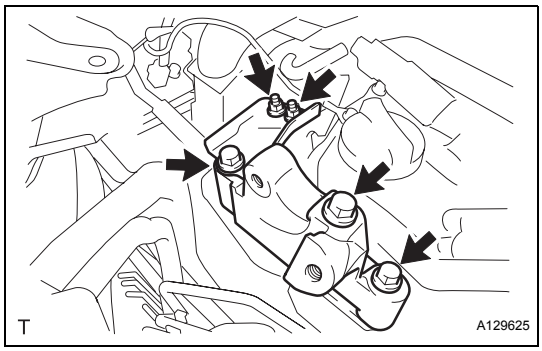

66. INSTALL ENGINE MOUNTING CONTROL BRACKET

(a) Temporarily install the mounting stay No. 2 RH and mounting bracket with the 3 bolts and 2 nuts.

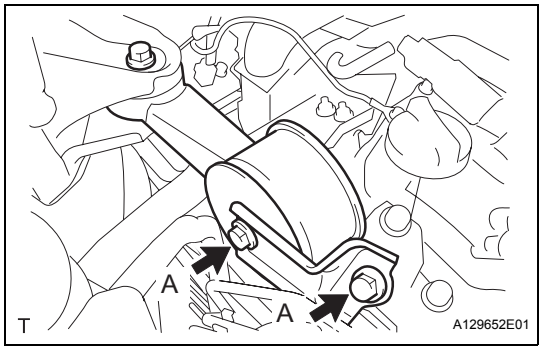

67. INSTALL ENGINE MOVING CONTROL ROD

(a) Temporarily install the moving control rod and mounting stay No. 3 RH with the 3 bolts.

(b) Tighten the bolt A.
Torque: 44 N*m (450 kgf*cm, 32 ft.*lbf)

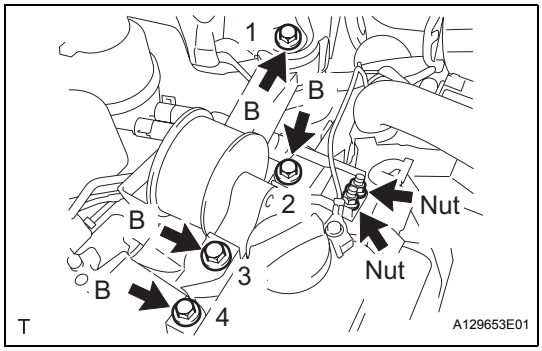

(c) Tightening the bolt B in the order shown in the illustration.
Torque: 38 N*m (387 kgf*cm, 28 ft.*lbf)

(d) Tighten the 2 nuts.
Torque: 23 N*m (235 kgf*cm, 17 ft.*lbf)

68. INSTALL RADIATOR RESERVE TANK ASSEMBLY

69. INSTALL FAN AND GENERATOR V BELT
HINT:
Install the V-ribbed belt (See page EM-8).
SST 09249-63010

70. INSTALL COWL TOP PANEL OUTER (See page BR-23)

71. INSTALL WINDSHIELD WIPER LINK ASSEMBLY (See page WW-40)

72. INSTALL FRONT WHEELS
Torque: 103 N*m (1,050 kgf*cm, 76 ft.*lbf)

73. ADD AUTOMATIC TRANSAXLE FLUID

74. ADD ENGINE OIL

75. ADD ENGINE COOLANT (See page CO-7)

76. ADD POWER STEERING FLUID

77. BLEED POWER STEERING FLUID

78. CHECK FOR OIL LEAKS

79. CHECK FOR ENGINE COOLANT LEAKS (See page CO-8)

80. INSPECT FOR FUEL LEAKS (See page FU-7)

81. CHECK FOR EXHAUST GAS LEAKS

82. INSPECT AND ADJUST FRONT WHEEL ALIGNMENT
HINT:
Adjust the front wheel alignment (See page SP-4).

83. INSPECT IGNITION TIMING (See page EM-1)

84. INSPECT ENGINE IDLE SPEED (See page EM-2)

85. CHECK FUNCTION OF THROTTLE BODY (See page ES-433)

86. INSTALL V-BANK COVER SUB-ASSEMBLY
(a) Fit the 3 retainers and install the V-bank cover.

87. INSPECT CO/HC (See page EM-3)

88. CHECK ABS SPEED SENSOR SIGNAL
(a) ABS WITH EBD SYSTEM (See page BC-11)
(b) ABS WITH EBD & BA & TRAC & VSC SYSTEM (See page BC-107)

89. PERFORM INITIALIZATION
(a) Some systems need initialization when disconnecting the cable from the negative battery terminal.

ENGINE UNIT

COMPONENTS

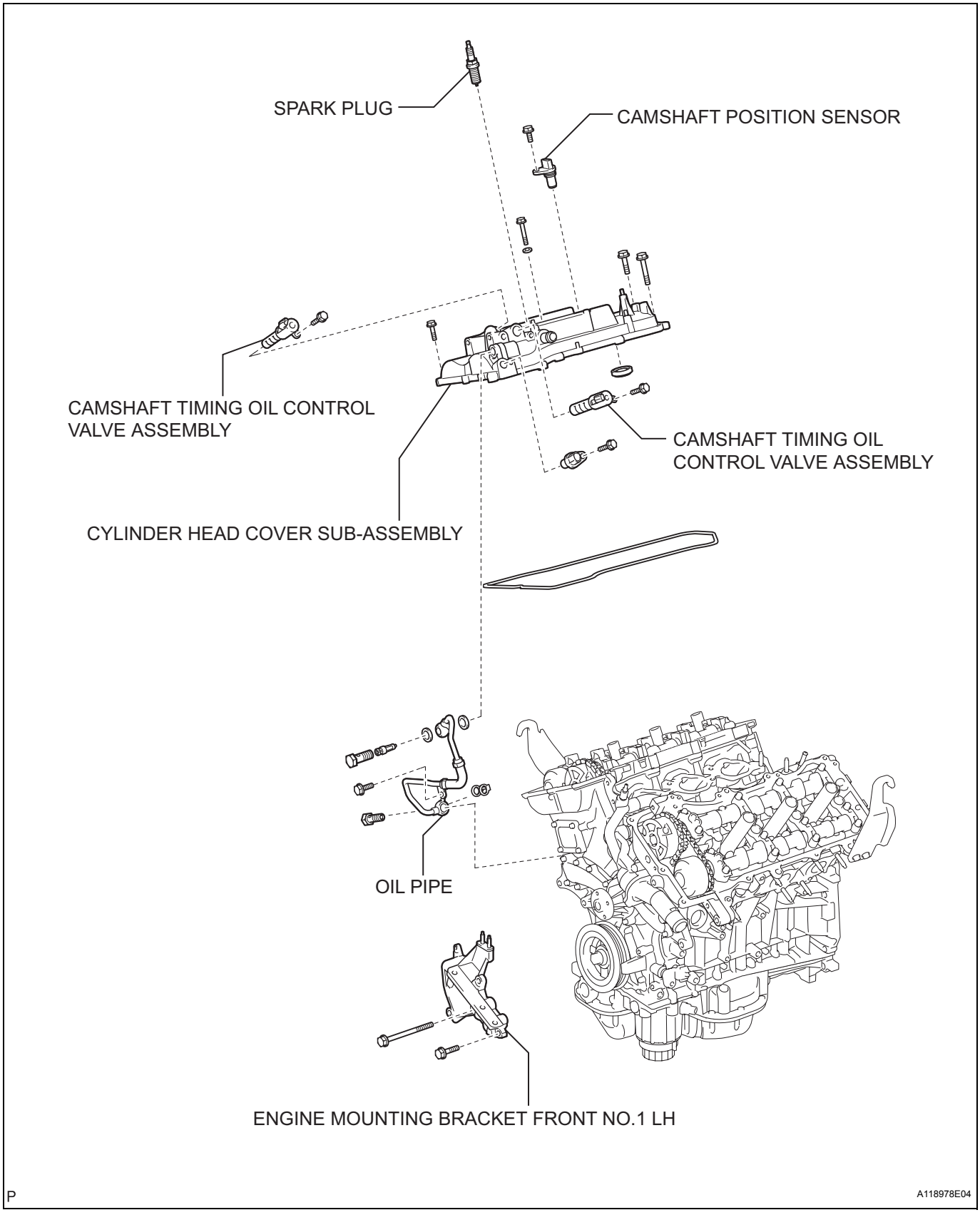

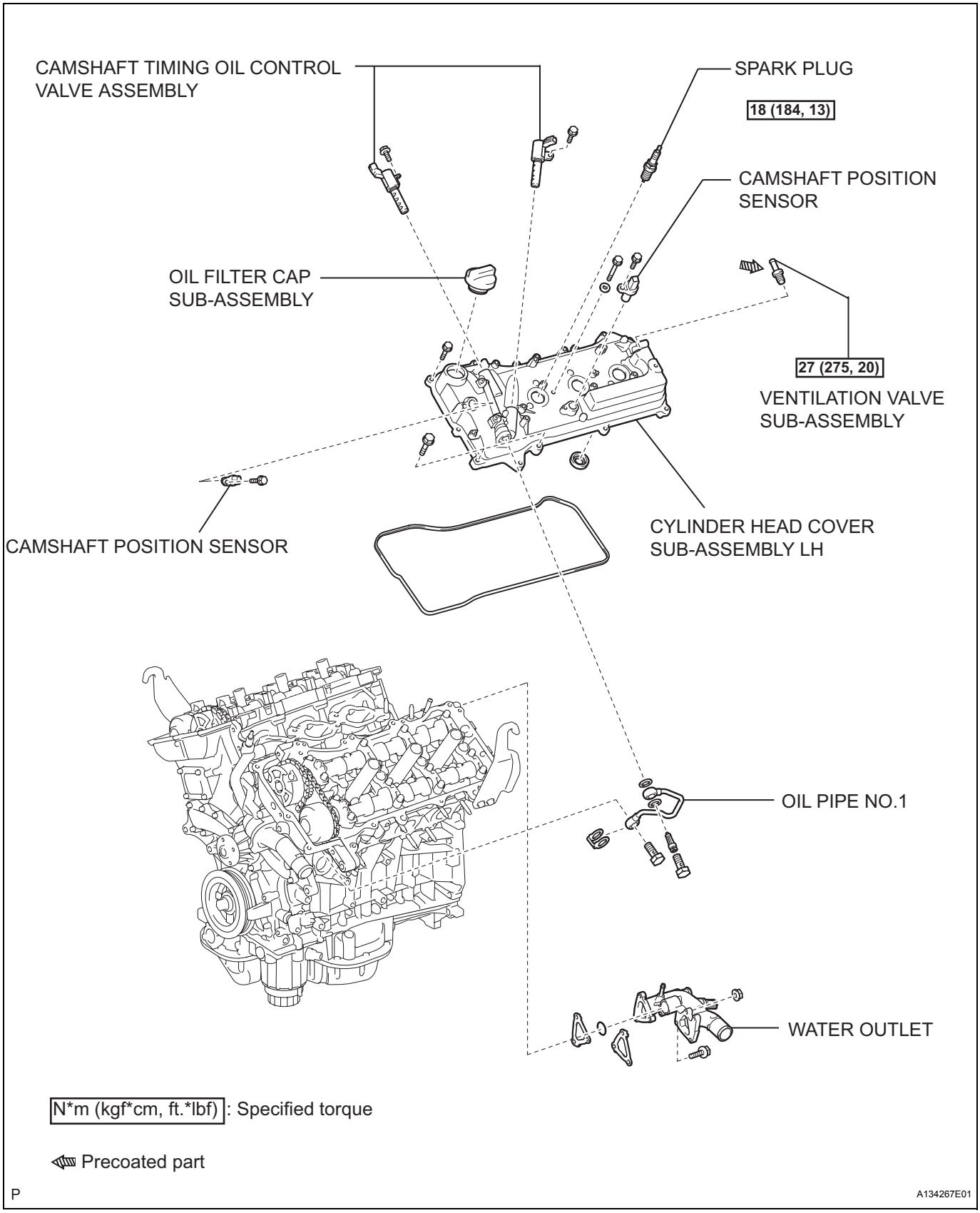
CAMSHAFT TIMING OIL CONTROL VALVE ASSEMBLY
SPARK PLUG
18 (184, 13)
CAMSHAFT POSITION SENSOR
OIL FILTER CAP SUB-ASSEMBLY
27 (275, 20)
VENTILATION VALVE SUB-ASSEMBLY
CAMSHAFT POSITION SENSOR
CYLINDER HEAD COVER SUB-ASSEMBLY LH
OIL PIPE NO.1
WATER OUTLET
N*m (kgf*cm, ft.*lbf): Specified torque
Precoated part
P
A134267E01

EM

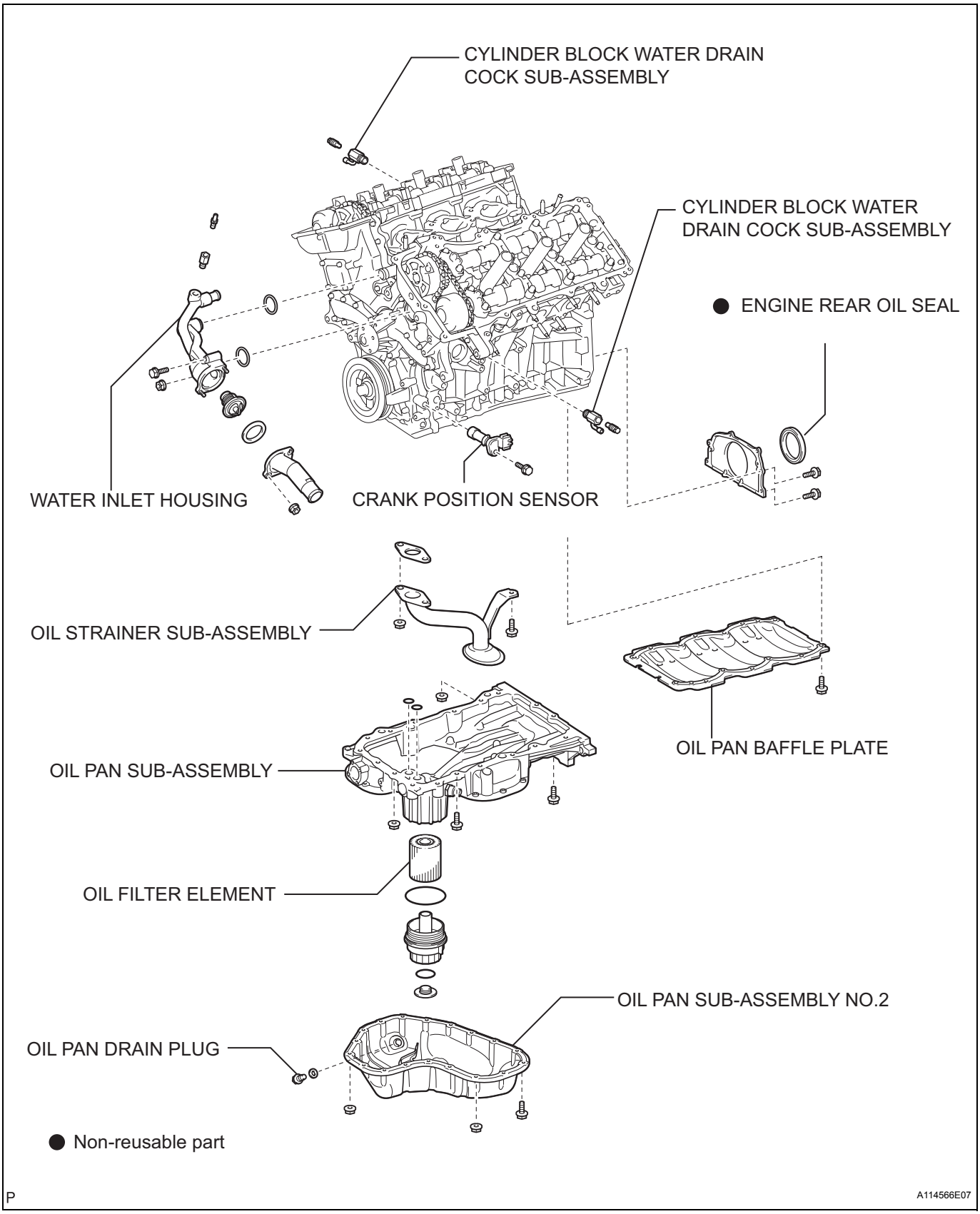
CYLINDER BLOCK WATER DRAIN COCK SUB-ASSEMBLY
CYLINDER BLOCK WATER DRAIN COCK SUB-ASSEMBLY
● ENGINE REAR OIL SEAL
WATER INLET HOUSING
CRANK POSITION SENSOR
OIL STRAINER SUB-ASSEMBLY
OIL PAN BAFFLE PLATE
OIL PAN SUB-ASSEMBLY
OIL FILTER ELEMENT
OIL PAN SUB-ASSEMBLY NO.2
OIL PAN DRAIN PLUG
● Non-reusable part
P
A114566E07

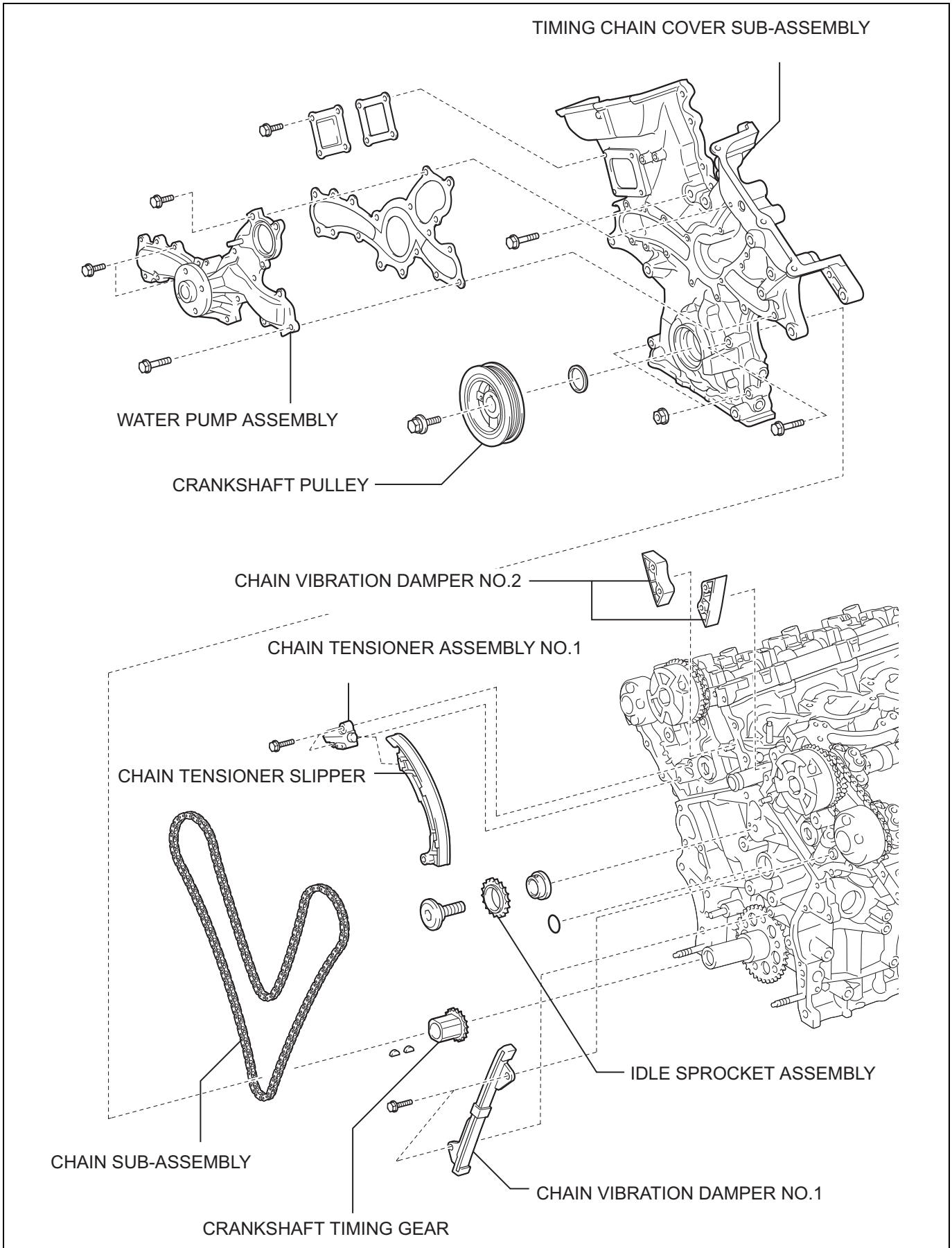
TIMING CHAIN COVER SUB-ASSEMBLY
WATER PUMP ASSEMBLY
CRANKSHAFT PULLEY
CHAIN VIBRATION DAMPER NO.2
CHAIN TENSIONER ASSEMBLY NO.1
CHAIN TENSIONER SLIPPER
IDLE SPROCKET ASSEMBLY
CHAIN SUB-ASSEMBLY
CHAIN VIBRATION DAMPER NO.1
CRANKSHAFT TIMING GEAR
P
A114567E03

EM

EM

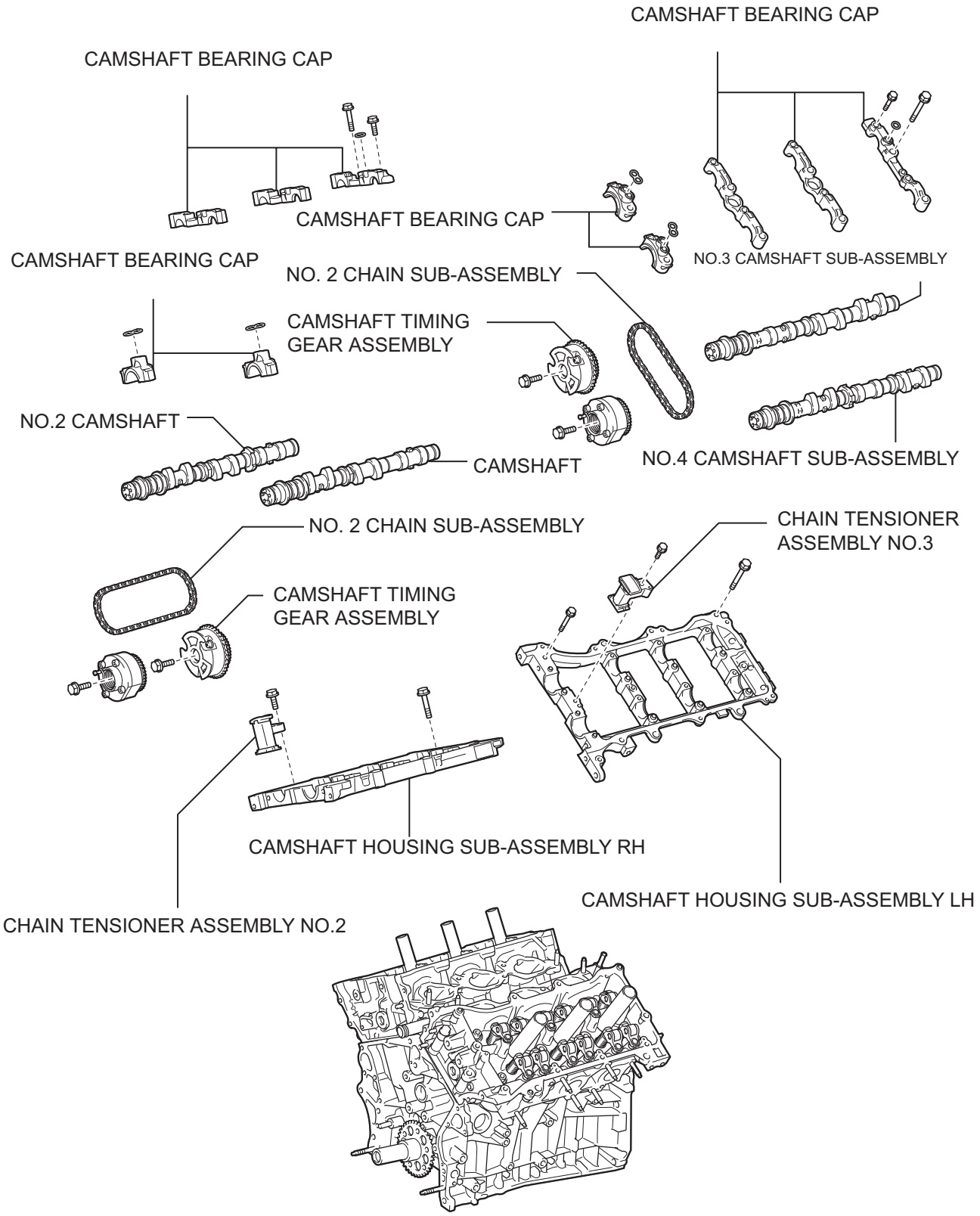

P

A114568E02

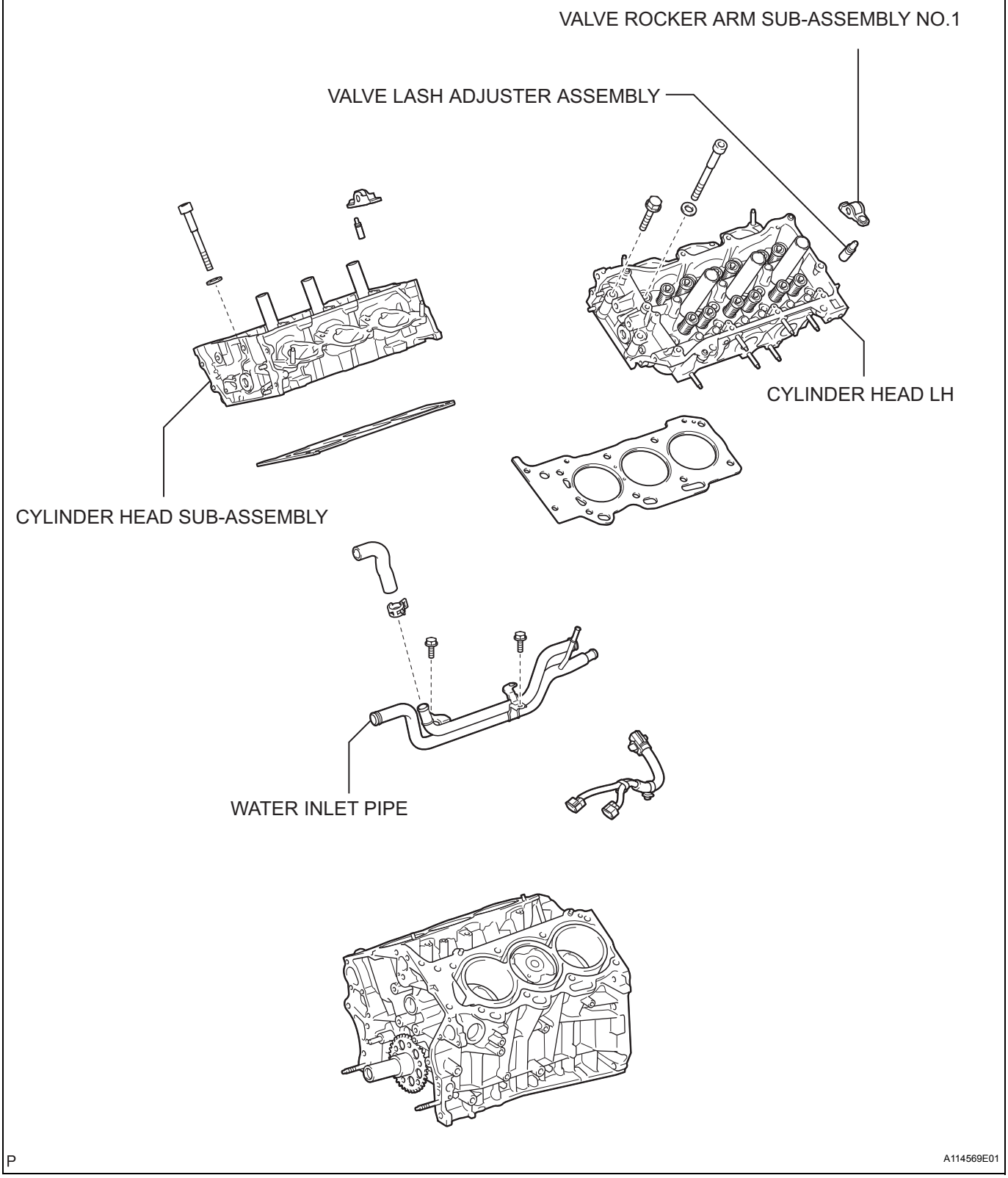
VALVE ROCKER ARM SUB-ASSEMBLY NO.1
VALVE LASH ADJUSTER ASSEMBLY
CYLINDER HEAD LH
CYLINDER HEAD SUB-ASSEMBLY
WATER INLET PIPE
P
A114569E01

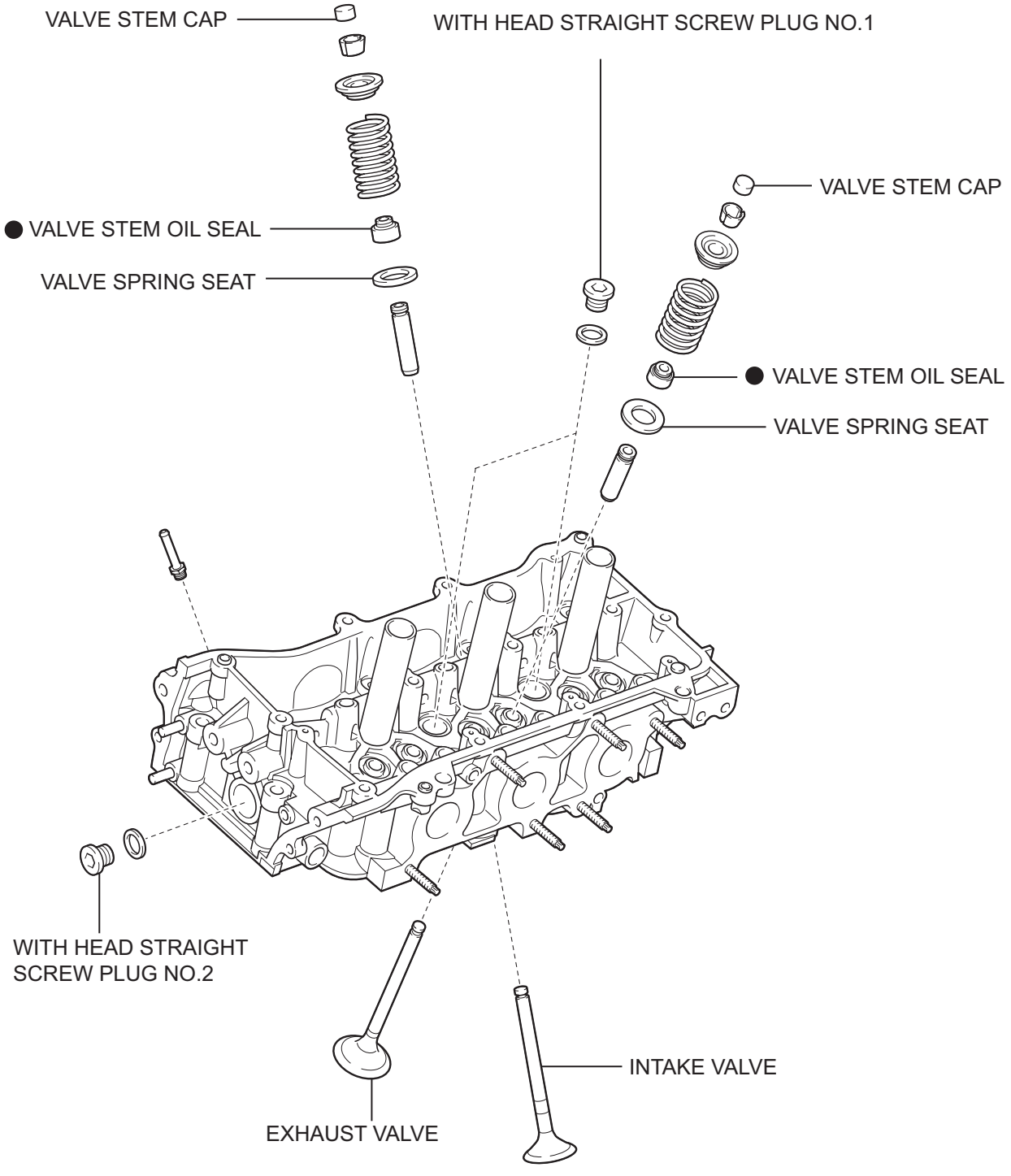
VALVE STEM CAP
WITH HEAD STRAIGHT SCREW PLUG NO.1
VALVE STEM CAP
● VALVE STEM OIL SEAL
VALVE SPRING SEAT
● VALVE STEM OIL SEAL
VALVE SPRING SEAT
WITH HEAD STRAIGHT SCREW PLUG NO.2
INTAKE VALVE
EXHAUST VALVE
● Non-reusable part
A114570E01

EM

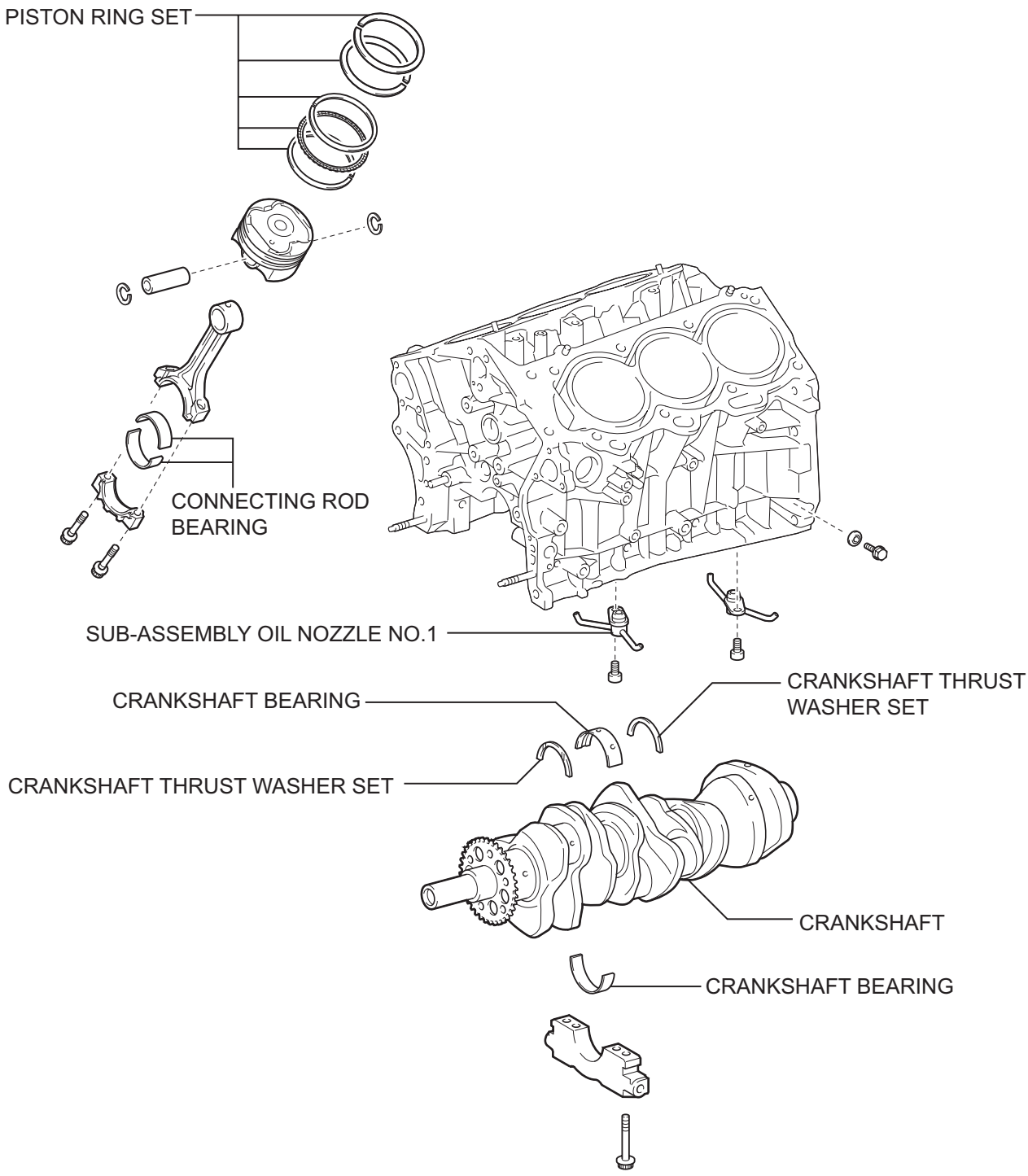
PISTON RING SET
CONNECTING ROD BEARING
SUB-ASSEMBLY OIL NOZZLE NO.1
CRANKSHAFT BEARING
CRANKSHAFT THRUST WASHER SET
CRANKSHAFT THRUST WASHER SET
CRANKSHAFT
CRANKSHAFT BEARING
P
A114571E01

EM

DISASSEMBLY

1. REMOVE OIL FILTER CAP SUB-ASSEMBLY

(a) Remove the oil filler cap sub-assembly.

2. REMOVE SPARK PLUG

3. REMOVE OIL PAN DRAIN PLUG

(a) Remove the drain plug and gasket.

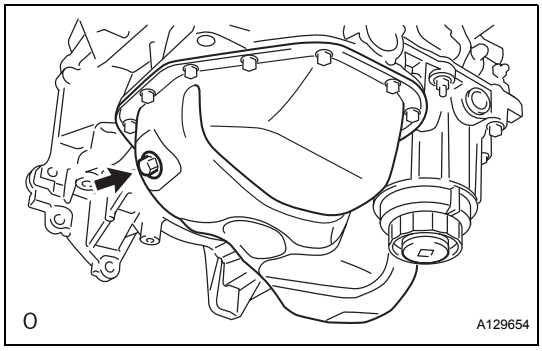

4. REMOVE VENTILATION VALVE SUB-ASSEMBLY

(a) Remove the ventilation valve sub-assembly.

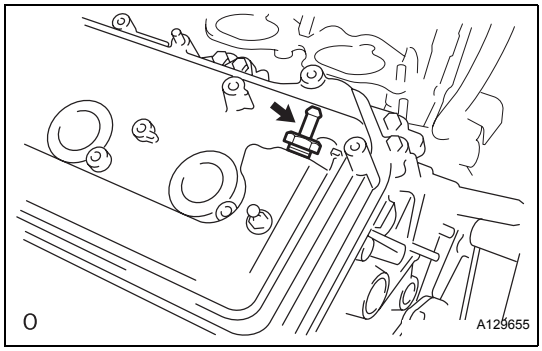

5. REMOVE CAMSHAFT POSITION SENSOR

(a) Remove the 4 bolts and 4 camshaft position sensors.

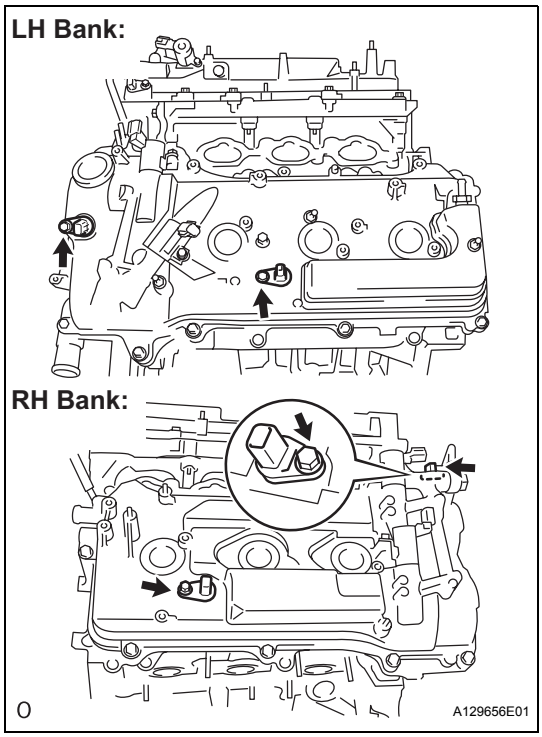

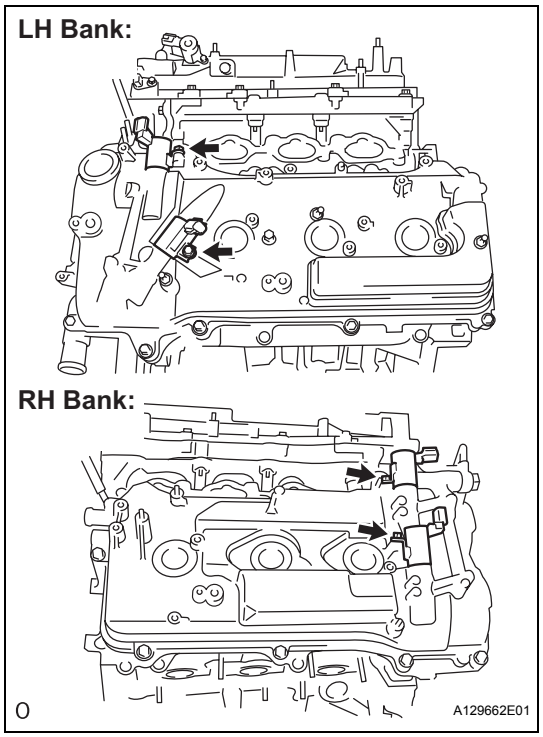

6. REMOVE CAMSHAFT TIMING OIL CONTROL VALVE ASSEMBLY

(a) Remove the 4 bolts and 4 camshaft timing oil control valves.

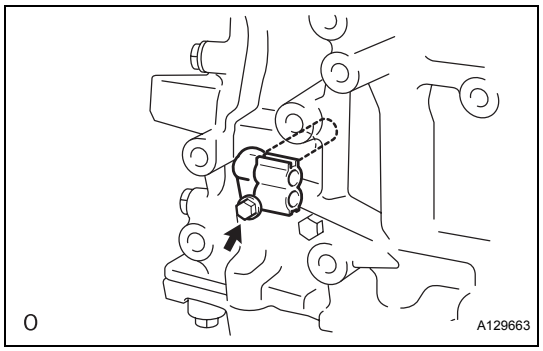

7. REMOVE CRANK POSITION SENSOR

(a) Remove the bolt and crankshaft position sensor.

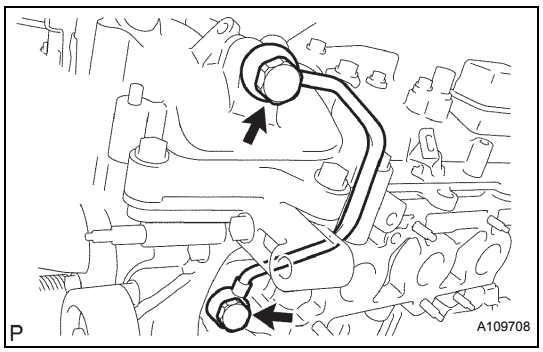

8. REMOVE OIL PIPE NO.1

(a) Remove the 2 oil pipe unions and oil pipe No. 1.
(b) Remove the oil control valve filter LH and gaskets.

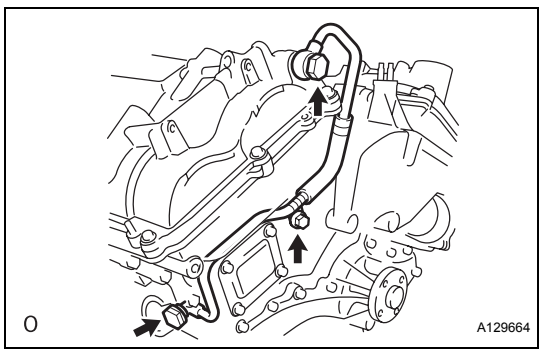

9. REMOVE OIL PIPE

(a) Remove the bolt.
(b) Remove the 2 oil pipe unions and oil pipe.
(c) Remove the oil control valve filter RH and gaskets.

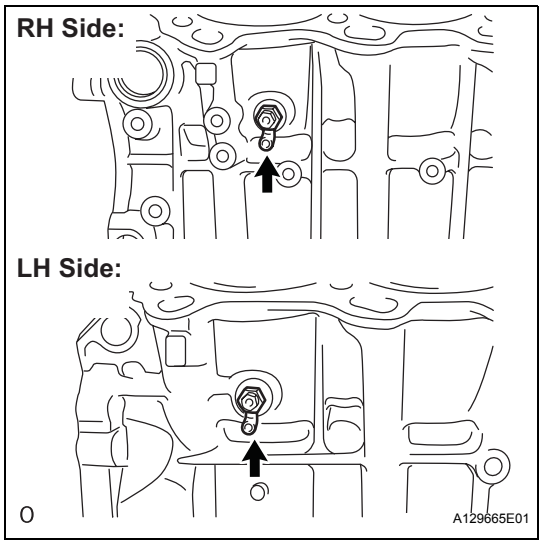

10. REMOVE CYLINDER BLOCK WATER DRAIN COCK SUB-ASSEMBLY

(a) Remove the water drain cocks from the cylinder block.

(b) Remove the water drain cock plugs from the water drain cocks.

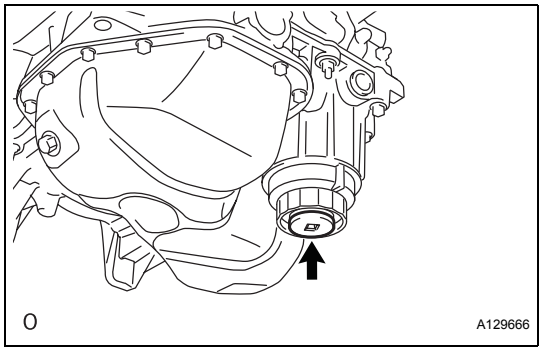

11. REMOVE OIL FILTER ELEMENT

(a) Remove the drain plug.

NOTICE:
Do not remove the O-ring.

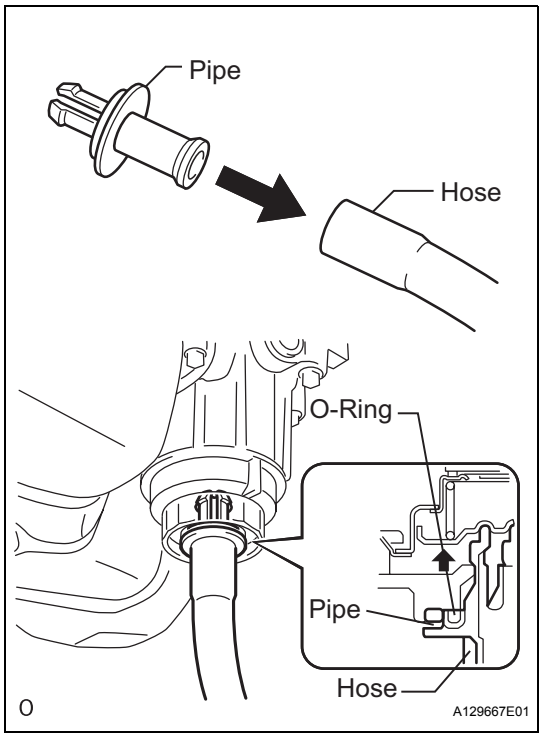

(b) Connect the hose to the pipe.

(c) Insert the pipe with the hose into the oil filter cap.

(d) Make sure that the oil is completely drained and remove the pipe and O-ring.

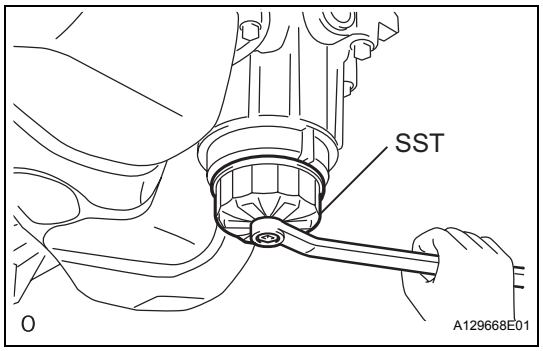

(e) Using SST, remove the oil filter cap.
SST 09228-06501

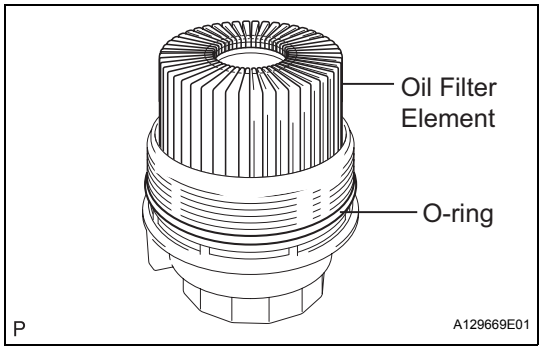

(f) Remove the oil filter element and O-ring from the oil filter cap.
NOTICE:
Do not use any tools when removing the O-ring to prevent the O-ring groove from being damaged.

EM

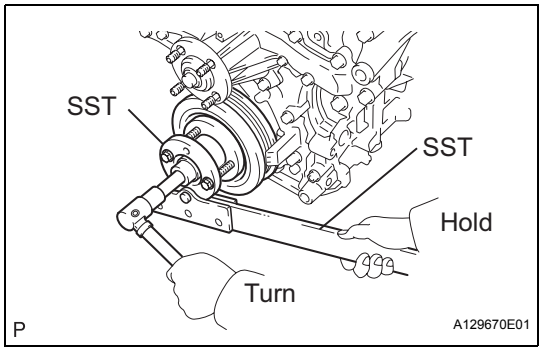

12. REMOVE CRANKSHAFT PULLEY

(a) Using SST, loosen the crankshaft pulley bolt.
SST 09213-70011 (09213-70020), 09330-00021

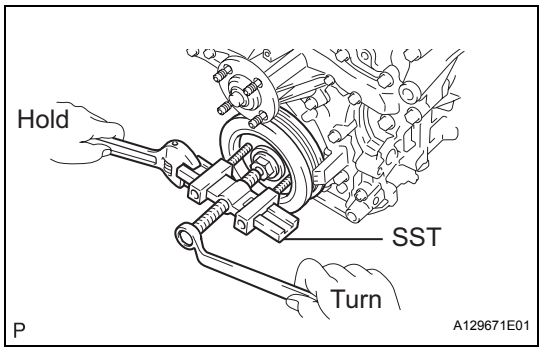

(b) Using SST, remove the crankshaft pulley bolt and crankshaft pulley.
SST 09950-50013 (09951-05010, 09952-05010, 09953-05020, 09954-05021)

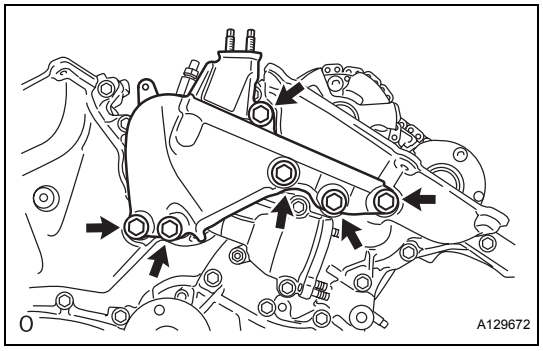

13. REMOVE ENGINE MOUNTING BRACKET FRONT NO.1 LH

(a) Remove the 6 bolts, and engine mounting bracket front No. 1 LH.

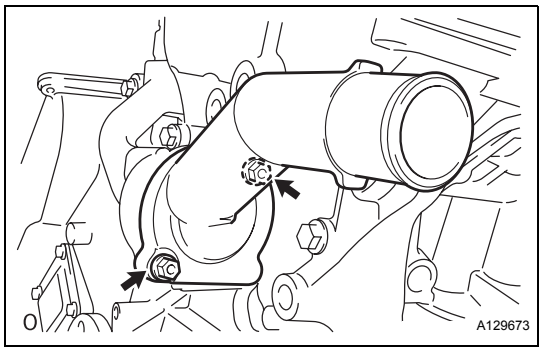

14. REMOVE WATER INLET HOUSING

(a) Remove the 2 nuts, water inlet and thermostat.
(b) Remove the gasket.
(c) Remove the drain cock plug.
(d) Remove the drain cock.

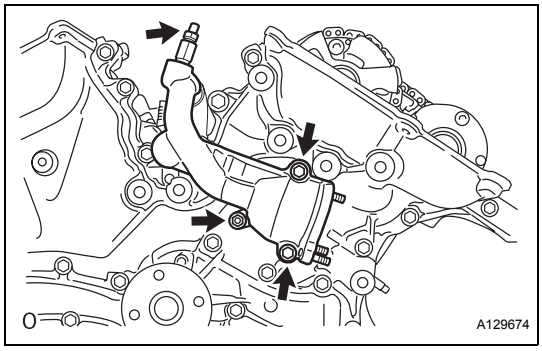

(e) Remove the 2 bolts, nut, and water inlet housing.

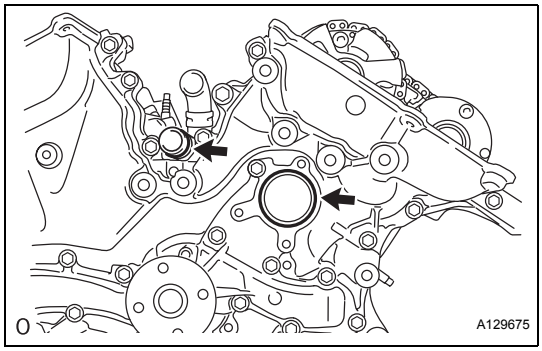

(f) Remove the 2 O-rings.

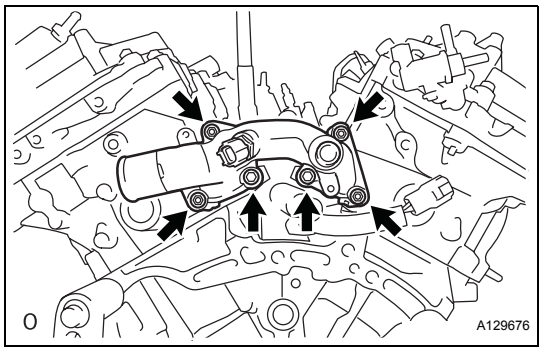

15. REMOVE WATER OUTLET

(a) Remove the 2 bolts, 4 nuts, and water outlet.

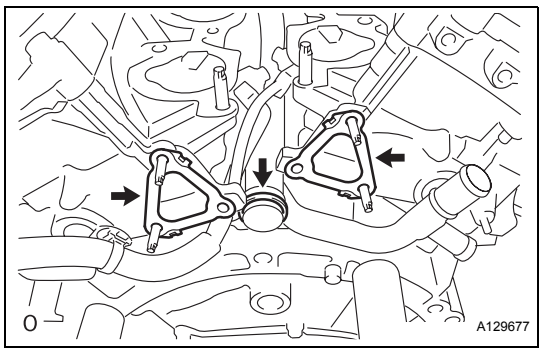

(b) Remove the 2 gaskets and O-ring.

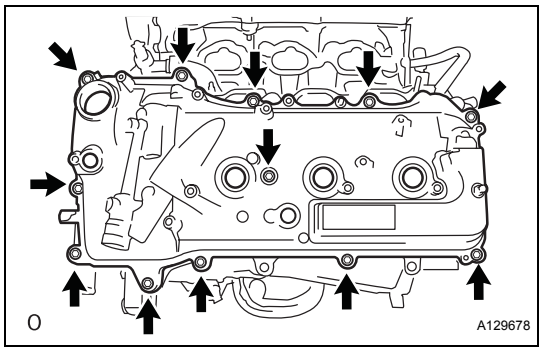

16. REMOVE CYLINDER HEAD COVER SUB-ASSEMBLY LH

(a) Remove the 12 bolts, head cover and gasket.

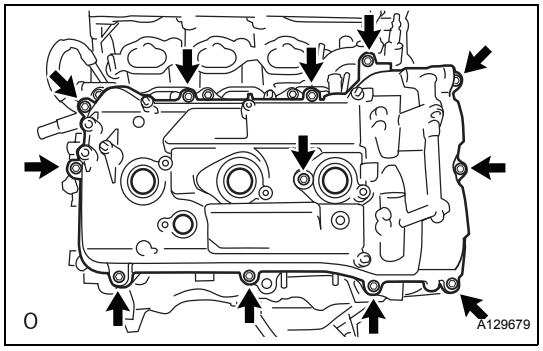

17. REMOVE CYLINDER HEAD COVER SUB-ASSEMBLY

(a) Remove the 12 bolts, head cover and gasket.

EM

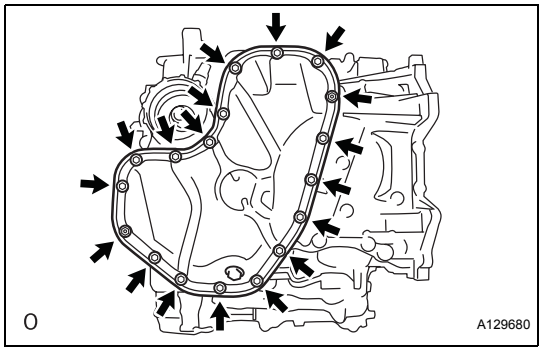

18. REMOVE OIL PAN SUB-ASSEMBLY NO.2

(a) Remove the 16 bolts and 2 nuts.

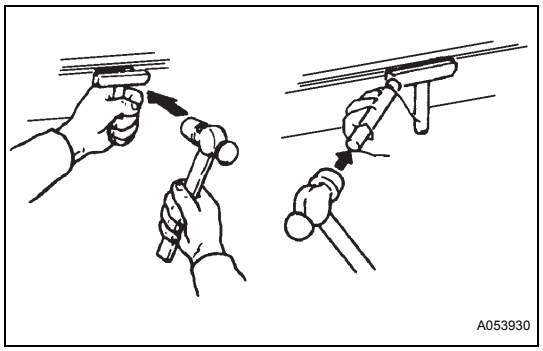

(b) Insert the blade of SST between the oil pans. Cut through the applied sealer and remove the oil pan sub-assembly No. 2.
SST 09032-00100
NOTICE:
Be careful not to damage the contact surfaces of the oil pans.

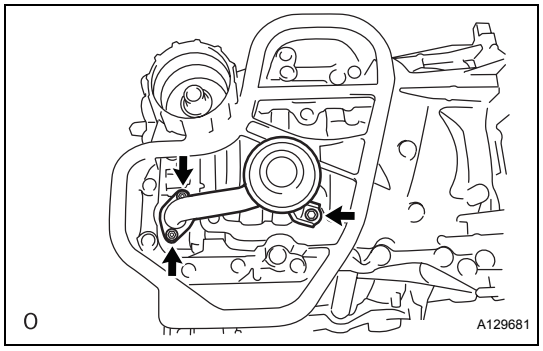

19. REMOVE OIL STRAINER SUB-ASSEMBLY

(a) Remove the bolt, 2 nuts, oil strainer and gasket.

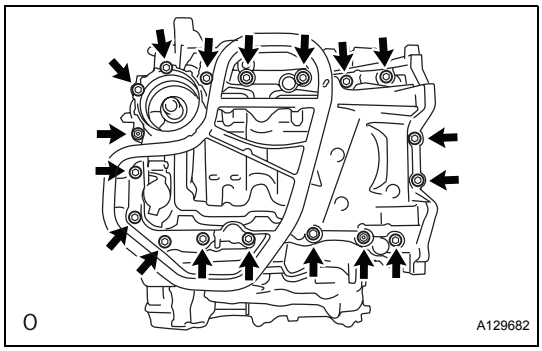

20. REMOVE OIL PAN SUB-ASSEMBLY

(a) Remove the 16 bolts and 2 nuts.
HINT:
Be sure to clean the bolts and stud bolts and check the threads for cracks or other damage.

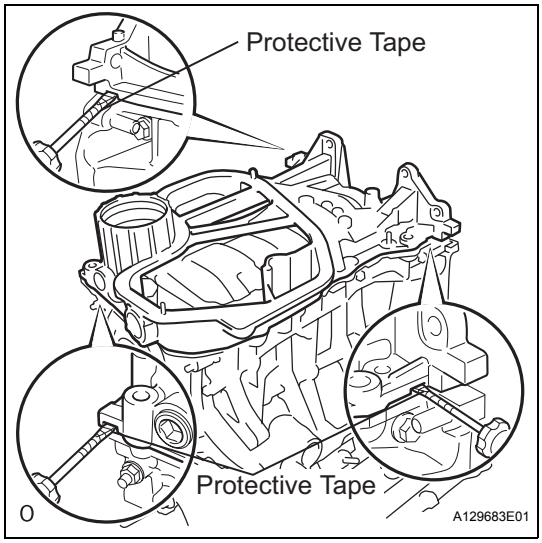

(b) Remove the oil pan by prying between the oil pan and cylinder block with a screwdriver.
NOTICE:
Be careful not to damage the contact surfaces of the cylinder block and oil pan.
HINT:
Tape the screwdriver tip before use.

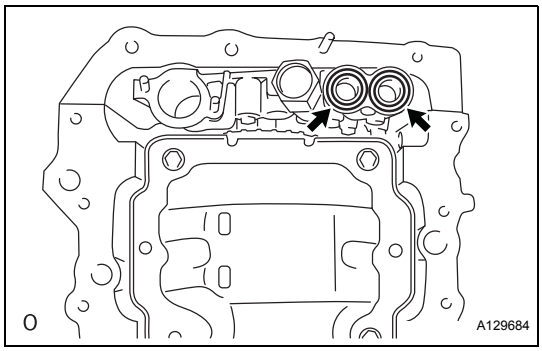

(c) Remove the 2 O-rings.

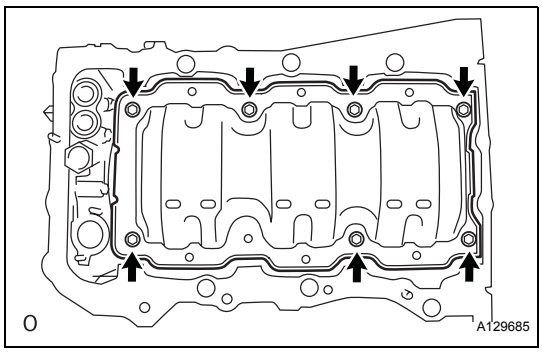

21. REMOVE OIL PAN BAFFLE PLATE

(a) Remove the 7 bolts and oil pan baffle plate.

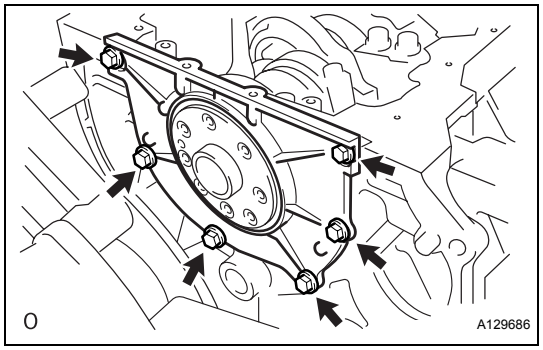

22. REMOVE ENGINE REAR OIL SEAL

(a) Remove the 6 bolts.

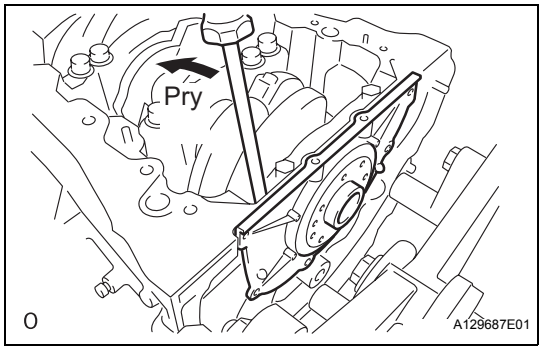

(b) Using a screwdriver, pry out the oil seal retainer.
HINT:
Tape the screwdriver tip before use.

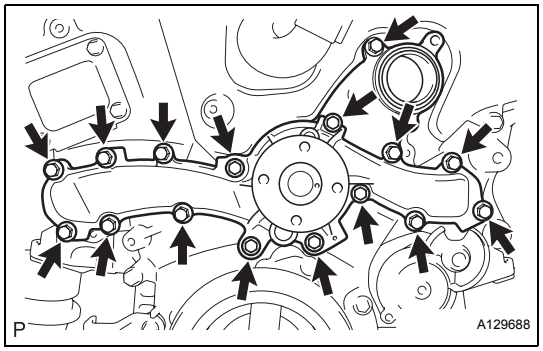

23. REMOVE WATER PUMP ASSEMBLY

(a) Remove the 16 bolts, water pump and gasket.

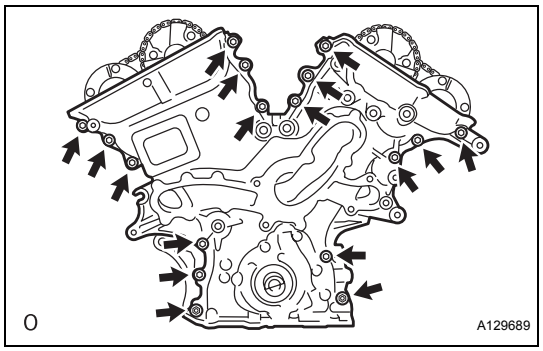

24. REMOVE TIMING CHAIN COVER SUB-ASSEMBLY

(a) Remove the 15 bolts and 2 nuts as shown in the illustration.

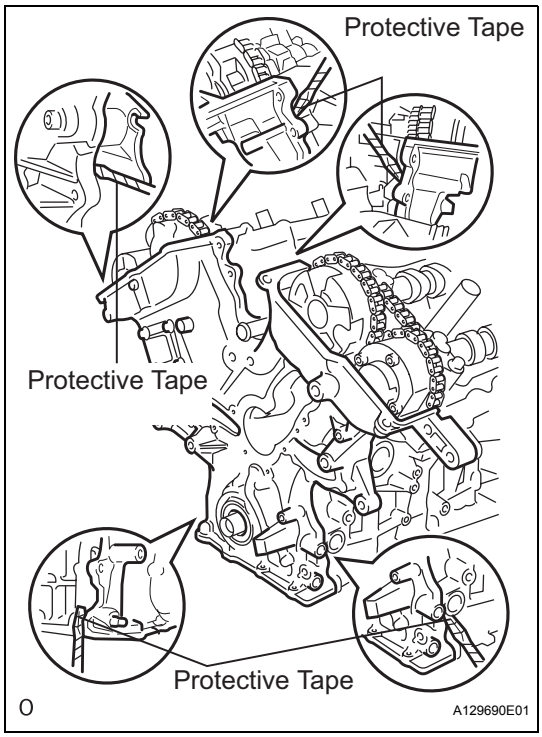

(b) Remove the timing chain cover by prying between the timing chain cover and cylinder head or cylinder block with a screwdriver.

NOTICE:

Be careful not to damage the contact surfaces of the cylinder head, cylinder block and chain cover.

HINT:

Tape the screwdriver tip before use.

(c) Remove the 4 bolts, chain cover plate and gasket.

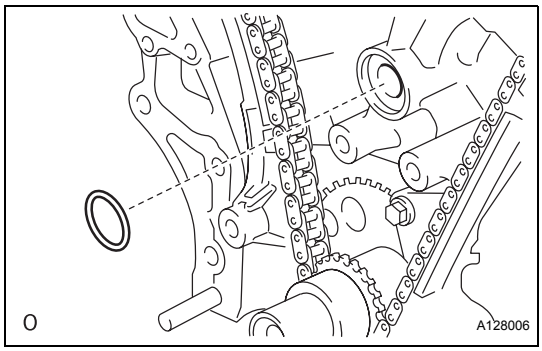

(d) Remove the gasket.

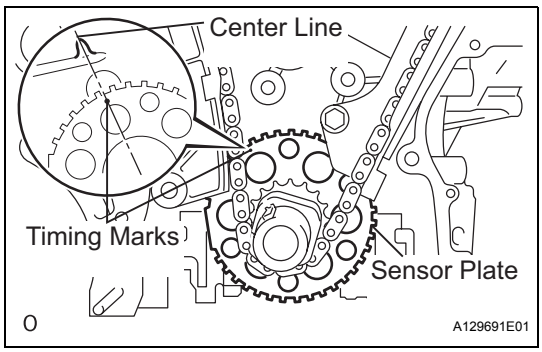

25. SET NO. 1 CYLINDER TO TDC / COMPRESSION

(a) Temporarily tighten the pulley set bolt.

(b) Set the timing mark on the crank angle sensor plate to the RH block bore center line (TDC / compression).

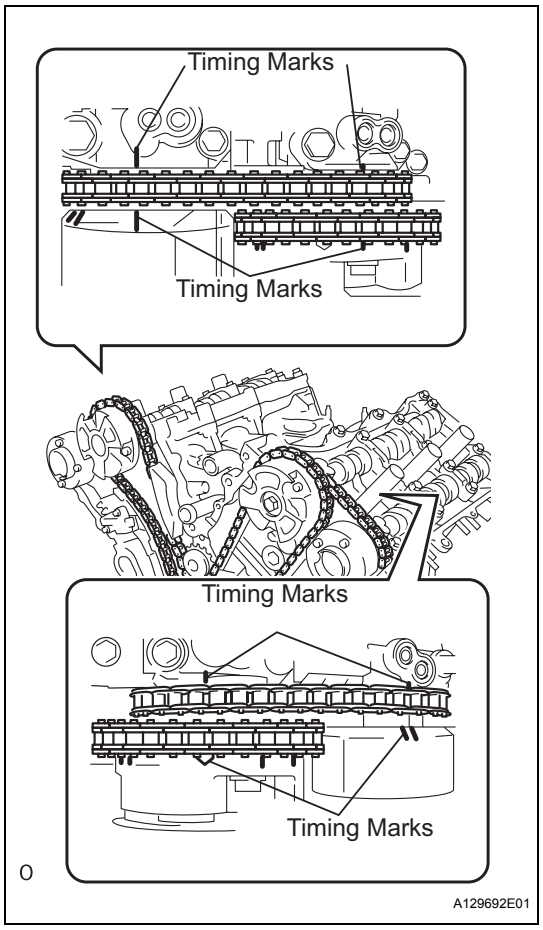

(c) Check that the timing marks of the camshaft timing gears are aligned with the timing marks of the bearing cap as shown in the illustration.
If not, turn the crankshaft 1 revolution (360°) and align the timing marks as above.

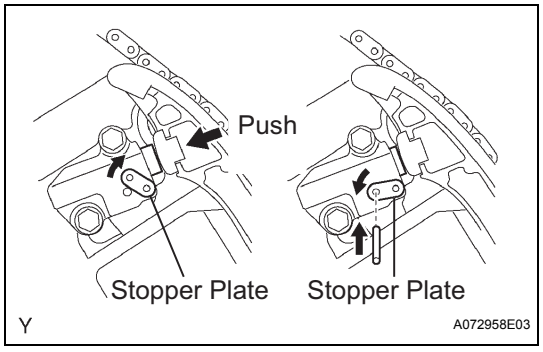

26. REMOVE CHAIN TENSIONER ASSEMBLY NO.1

(a) Move the stopper plate upward to release the lock, and push the plunger deep into the tensioner.
(b) Move the stopper plate downward to set the lock, and insert a hexagon wrench into the stopper plate's hole.
(c) Remove the 2 bolts and chain tensioner.

27. REMOVE CHAIN TENSIONER SLIPPER

(a) Remove the chain tensioner slipper.

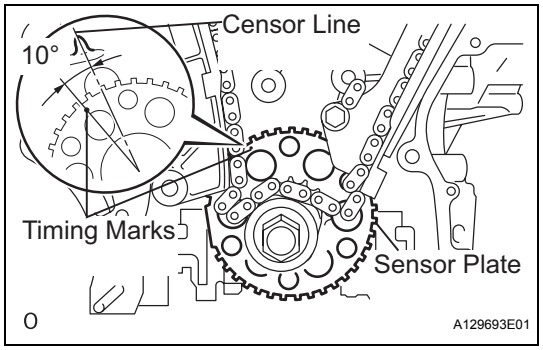

28. REMOVE CHAIN SUB-ASSEMBLY

(a) Turn the crankshaft counterclockwise 10° to loosen the chain of the crankshaft timing gear.
(b) Remove the chain from the crank timing gear and place it on the crankshaft.

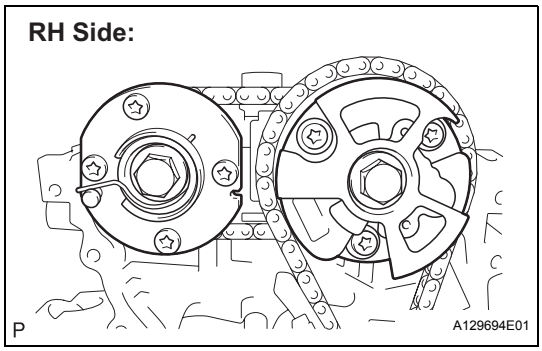

(c) Turn the camshaft timing gear assembly on the RH bank clockwise (approximately 60°) and set it as shown in the illustration. Be sure to loosen the chain between the center banks.
(d) Remove the chain.

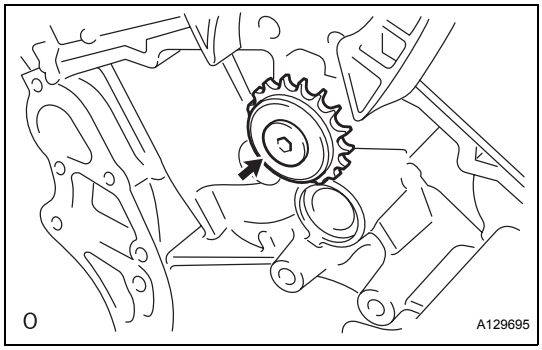

29. REMOVE IDLE SPROCKET ASSEMBLY
(a) Using a 10 mm hexagon wrench, remove the idle gear shaft No. 2, idle sprocket and idle gear shaft No. 1.

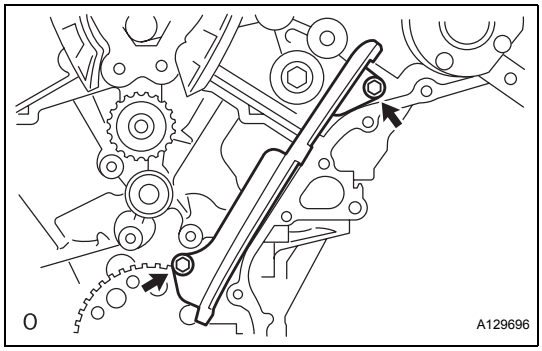

30. REMOVE CHAIN VIBRATION DAMPER NO.1
(a) Remove the 2 bolts and chain vibration damper No. 1.

31. REMOVE CHAIN VIBRATION DAMPER NO.2
(a) Remove the 2 chain vibration dampers.

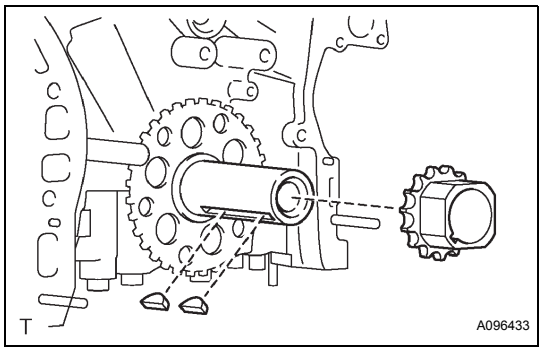

32. REMOVE CRANKSHAFT TIMING GEAR
(a) Remove the pulley set bolt.
(b) Remove the crankshaft timing gear from the crankshaft.
(c) Remove the 2 pulley set keys from the crankshaft.

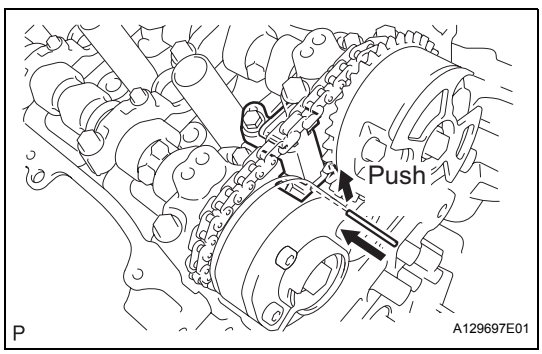

33. REMOVE CAMSHAFT TIMING GEARS AND NO. 2 CHAIN (for RH BANK)
(a) While raising up the chain tensioner No. 2, insert a pin of ϕ1.0 mm (0.039 in.) into the hole to fix it.

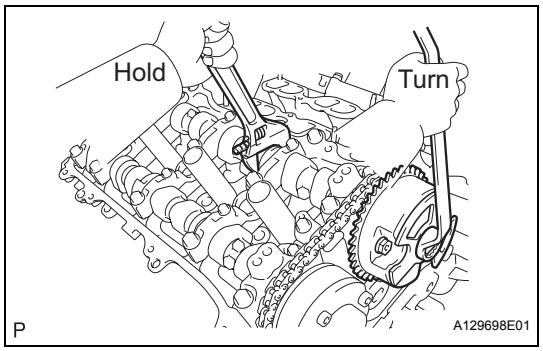

(b) Hold the hexagonal portion of the camshaft with a wrench, and remove the 2 bolts and 2 camshaft timing gears.

NOTICE:

- **Be careful not to damage the cylinder head with the wrench.**
- **Do not disassemble the camshaft timing gear assembly.**

(c) Remove the No. 2 chain.

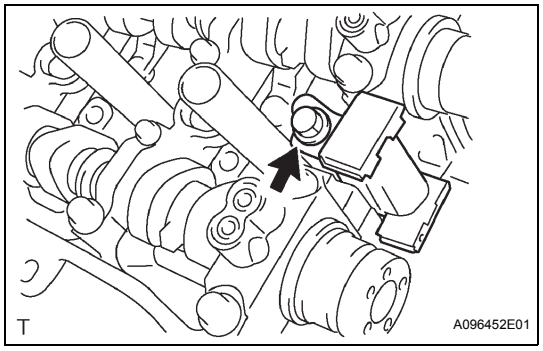

34. REMOVE CHAIN TENSIONER ASSEMBLY NO.2

(a) Remove the bolt and chain tensioner No. 2.

EM

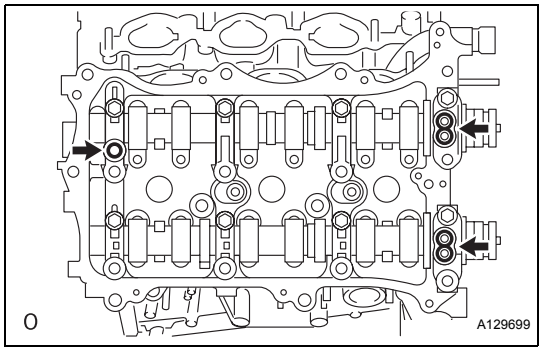

35. REMOVE CAMSHAFT BEARING CAP

(a) Remove the 3 gaskets.

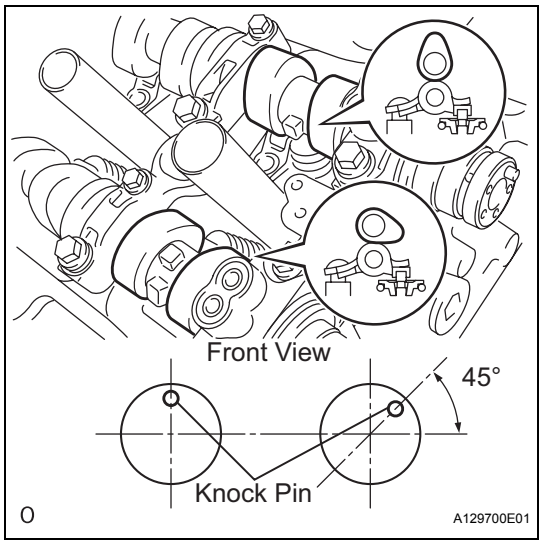

(b) Make sure that the knock pin of the camshaft is positioned as shown in the illustration.

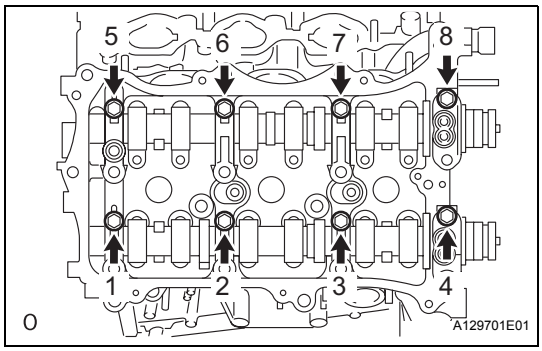

(c) Uniformly loosen and remove the 8 bearing cap bolts in the sequence shown in the illustration.

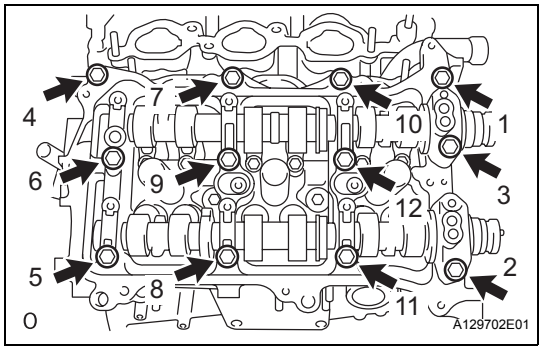

(d) Uniformly loosen and remove the 12 bearing cap bolts in the sequence shown in the illustration.
NOTICE:
Uniformly loosen the bolts while keeping the camshaft level.

(e) Remove the 5 bearing caps.

36. REMOVE CAMSHAFT

(a) Remove the camshaft.

37. REMOVE NO.2 CAMSHAFT

(a) Remove the No. 2 camshaft.

38. REMOVE CAMSHAFT HOUSING SUB-ASSEMBLY RH

(a) Remove the camshaft housing sub-assembly RH by prying between the cylinder head and camshaft housing sub-assembly RH with a screwdriver.
NOTICE:
Be careful not to damage the contact surfaces of the cylinder head and camshaft housing.
HINT:
Tape the screwdriver tip before use.

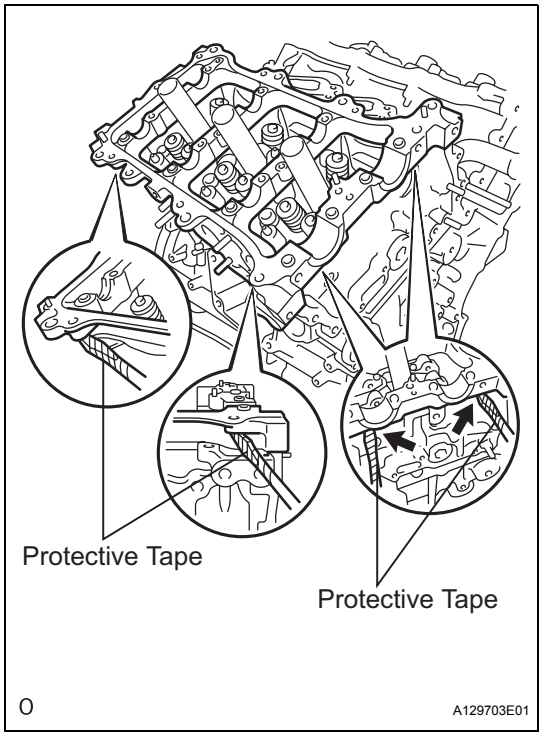

39. REMOVE CAMSHAFT TIMING GEARS AND NO. 2 CHAIN (for LH BANK)

(a) While pushing down the chain tensioner No. 3, insert a pin of ϕ1.0 mm (0.039 in.) into the hole to fix it.

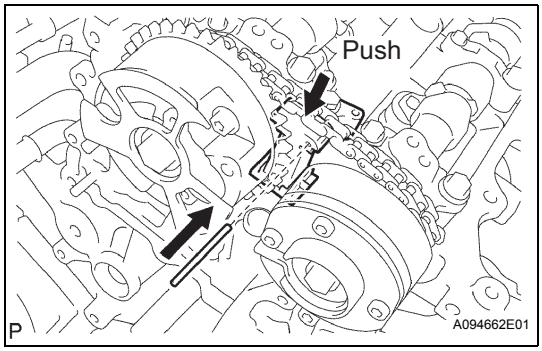

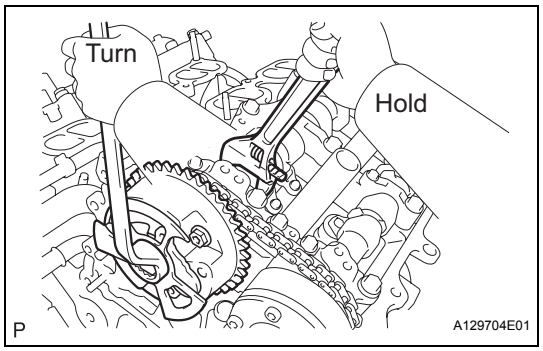

(b) Hold the hexagonal portion of the camshaft with a wrench, and remove the 2 bolts and 2 camshaft timing gears.
NOTICE:
- **Be careful not to damage the cylinder head with the wrench.**
- **Do not disassemble the camshaft timing gear assembly.**

(c) Remove the No. 2 chain.

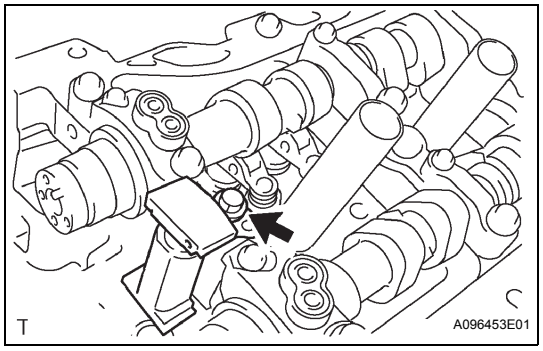

40. REMOVE CHAIN TENSIONER ASSEMBLY NO.3

(a) Remove the bolt and chain tensioner No. 3.

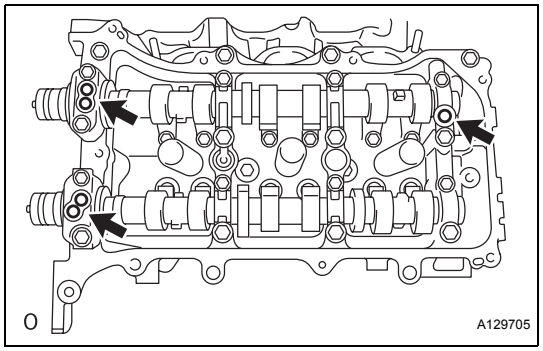

41. REMOVE CAMSHAFT BEARING CAP

(a) Remove the 3 gaskets.

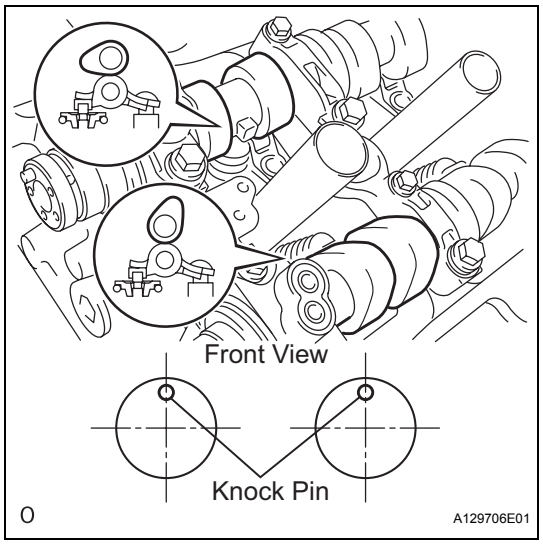

(b) Make sure that the knock pin of the camshaft is positioned as shown in the illustration.

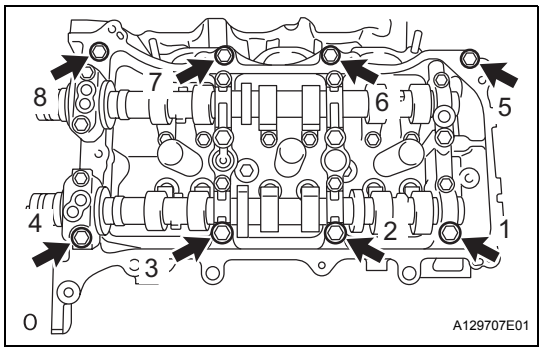

(c) Uniformly loosen and remove the 8 bearing cap bolts in the sequence shown in the illustration.

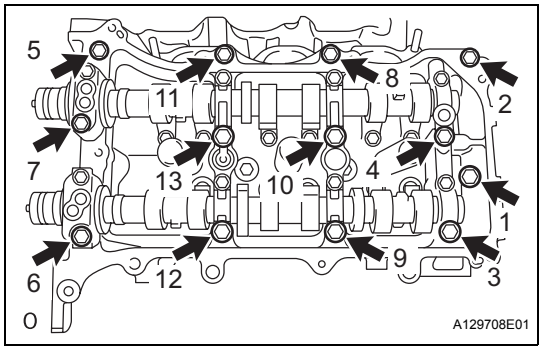

(d) Uniformly loosen and remove the 13 bearing cap bolts in the sequence shown in the illustration.
NOTICE:
Uniformly loosen the bolts while keeping the camshaft level.

(e) Remove the 5 bearing caps.

42. REMOVE NO.4 CAMSHAFT SUB-ASSEMBLY

(a) Remove the No. 4 camshaft sub-assembly.

43. REMOVE NO.3 CAMSHAFT SUB-ASSEMBLY

(a) Remove the No. 3 camshaft sub-assembly.

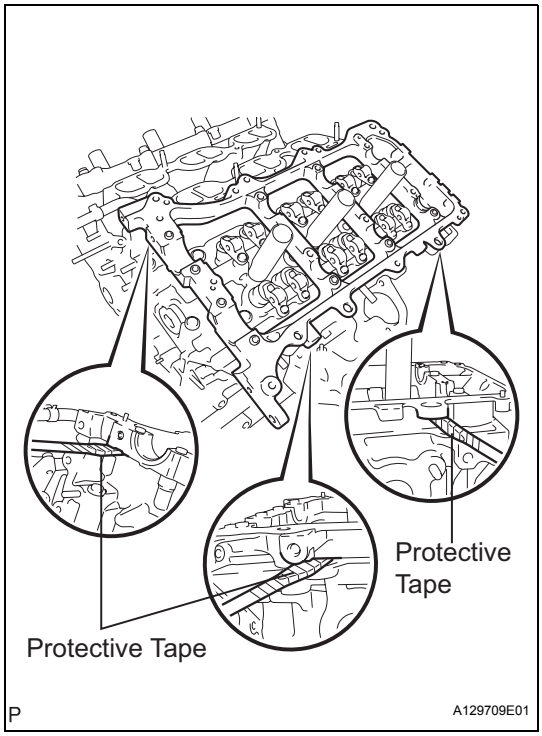

44. REMOVE CAMSHAFT HOUSING SUB-ASSEMBLY LH

(a) Remove the camshaft housing sub-assembly LH by prying between the cylinder head and camshaft housing sub-assembly LH with a screwdriver.
NOTICE:
Be careful not to damage the contact surfaces of the cylinder head and camshaft housing.
HINT:
Tape the screwdriver tip before use.

45. REMOVE VALVE ROCKER ARM SUB-ASSEMBLY NO.1

(a) Remove the 24 valve rocker arms.
HINT:
Arrange the removed parts in the correct order.

46. REMOVE VALVE LASH ADJUSTER ASSEMBLY

(a) Remove the 24 valve lash adjusters from the cylinder head.
HINT:
Arrange the removed parts in the correct order.

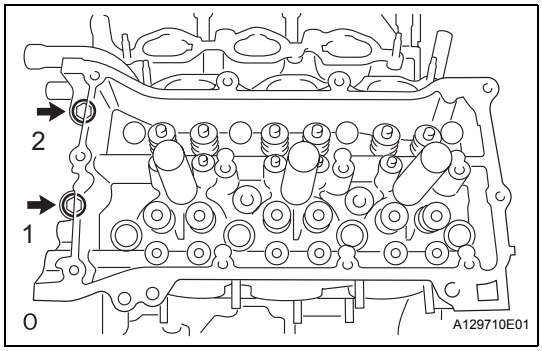

47. REMOVE CYLINDER HEAD LH

(a) Uniformly loosen and remove the 2 bolts in the sequence shown in the illustration.

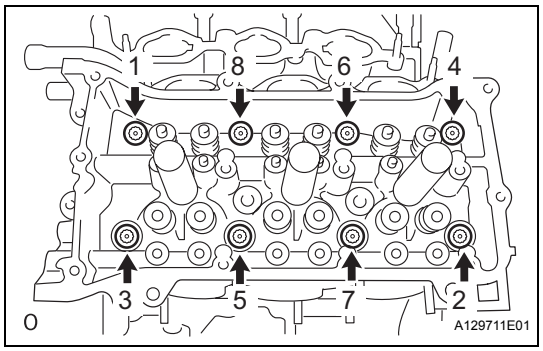

(b) Using a 10 mm bi-hexagon wrench, uniformly loosen the 8 bolts in the sequence shown in the illustration. Remove the 8 cylinder head bolts and plate washers.

NOTICE:

- **Be careful not to drop washers into the cylinder head.**
- **Head warpage or cracking could result from not removing bolts in an incorrect order.**

HINT:

Be sure to keep the removed parts separate for each installation position.

(c) Remove the cylinder head and gasket.

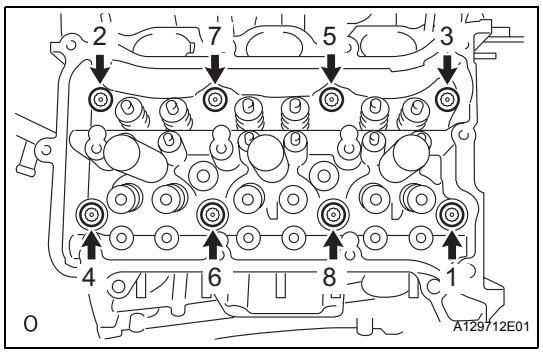

48. REMOVE CYLINDER HEAD SUB-ASSEMBLY

(a) Using a 10 mm bi-hexagon wrench, uniformly loosen the 8 bolts in the sequence shown in the illustration. Remove the 8 cylinder head bolts and plate washers.

NOTICE:

- **Be careful not to drop washers into the cylinder head.**
- **Head warpage or cracking could result from not removing bolts in an incorrect order.**

HINT:

Be sure to keep the removed parts separate for each installation position.

(b) Remove the cylinder head and gasket.

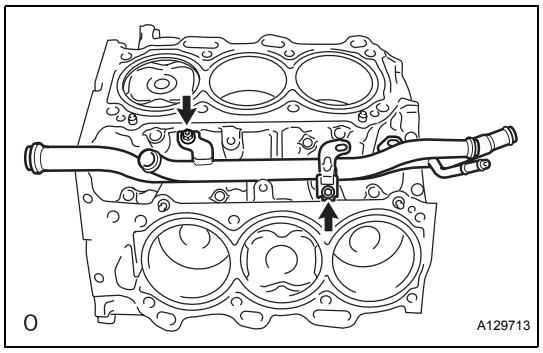

49. REMOVE WATER INLET PIPE

(a) Separate the knock sensor wire.

(b) Remove the 2 bolts and water outlet pipe.

(c) Separate the water by-pass hose No. 1.

50. REMOVE VALVE STEM CAP

(a) Remove the valve stem caps from the cylinder head.

HINT:

Arrange the removed parts in the correct order.

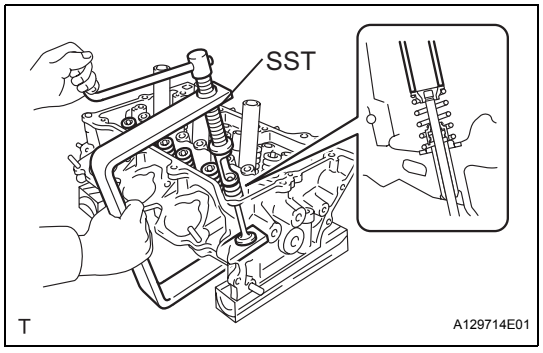

51. REMOVE INTAKE VALVE

(a) Using SST and wooden blocks, compress the compression spring and remove the valve retainer locks.

SST 09202-70020 (09202-00010)

(b) Remove the retainer, compression spring and valve.

HINT:

Arrange the removed parts in the correct order.

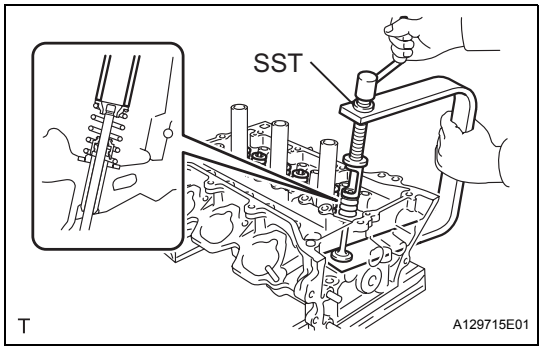

52. REMOVE EXHAUST VALVE

(a) Using SST and wooden blocks, compress the compression spring and remove the valve retainer locks.
SST 09202-70020 (09202-00010)

(b) Remove the retainer, compression spring and valve.
HINT:
Arrange the removed parts in the correct order.

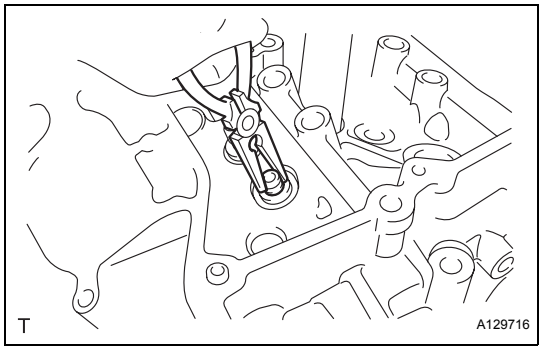

53. REMOVE VALVE STEM OIL SEAL

(a) Using needle-nose pliers, remove the oil seals.

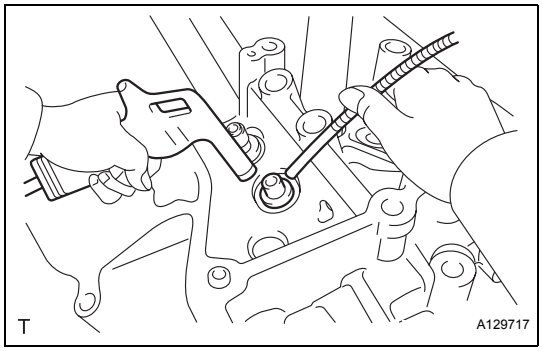

54. REMOVE VALVE SPRING SEAT

(a) Using compressed air and a magnetic finger, remove the valve spring seat by blowing air onto it.

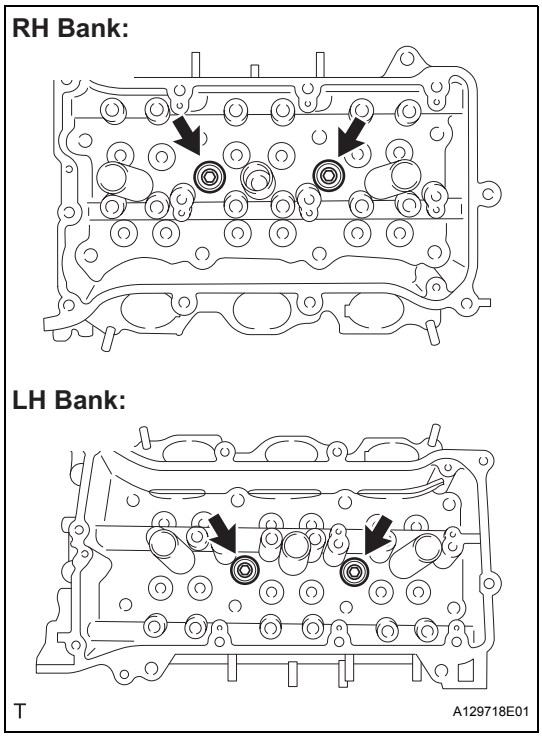

55. REMOVE WITH HEAD STRAIGHT SCREW PLUG NO.1

(a) Using a 10 mm hexagon wrench, remove the 4 screw plugs and 4 gaskets.
NOTICE:
If water leaks from the w/ head straight screw plug No. 1 or the plug is corroded, replace it.

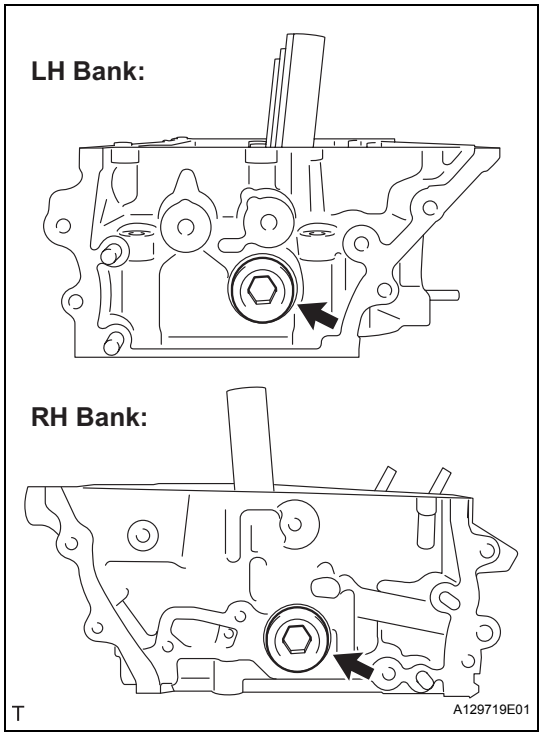

56. REMOVE WITH HEAD STRAIGHT SCREW PLUG NO.2

(a) Using a 14 mm hexagon wrench, remove the 2 screw plugs and 2 gaskets.

NOTICE:
If water leaks from the w/ head straight screw plug No. 2 or the plug is corroded, replace it.

57. REMOVE RING PIN

NOTICE:
It is not necessary to remove the ring pin unless it is being replaced.

58. REMOVE STUD BOLT

NOTICE:
If the stud bolt is deformed or the threads are damaged, replace it.

EM

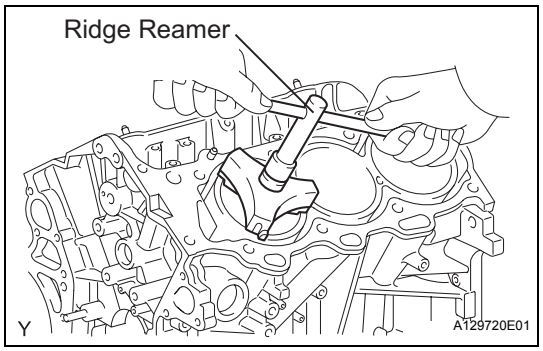

59. REMOVE PISTON SUB-ASSEMBLY WITH CONNECTING ROD

(a) Using a ridge reamer, remove all the carbon from the top of the cylinder.

(b) Push the piston, connecting rod assembly and upper bearing through the top of the cylinder block.
HINT:
- Keep the bearing, connecting rod and cap together.
- Arrange the piston and connecting rod assemblies in the correct order.

60. REMOVE CONNECTING ROD BEARING

HINT:
Arrange the removed parts in the correct order.

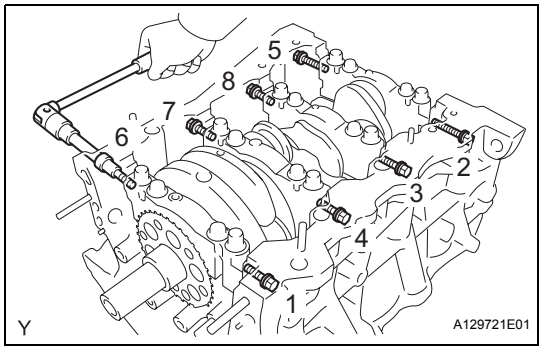

61. REMOVE CRANKSHAFT

(a) Uniformly loosen and remove the 8 main bearing cap bolts and seal washers in the several steps and in the sequence shown in the illustration.

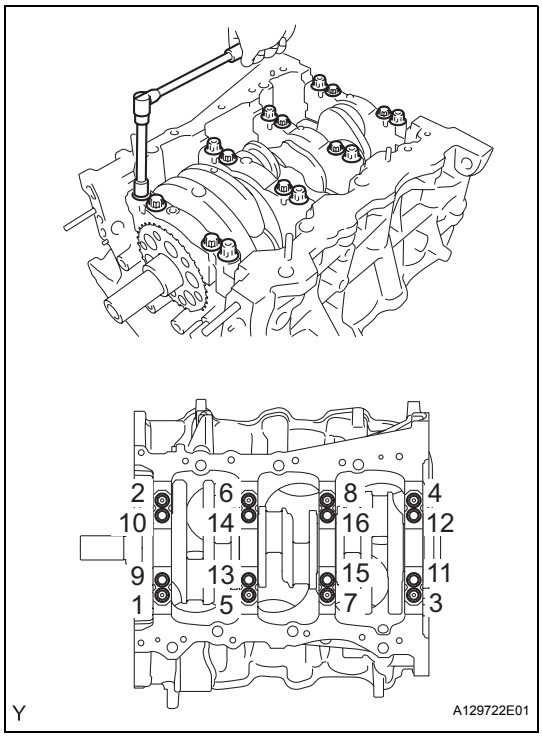

(b) Uniformly loosen the 16 bearing cap bolts in several steps in the sequence shown in the illustration.

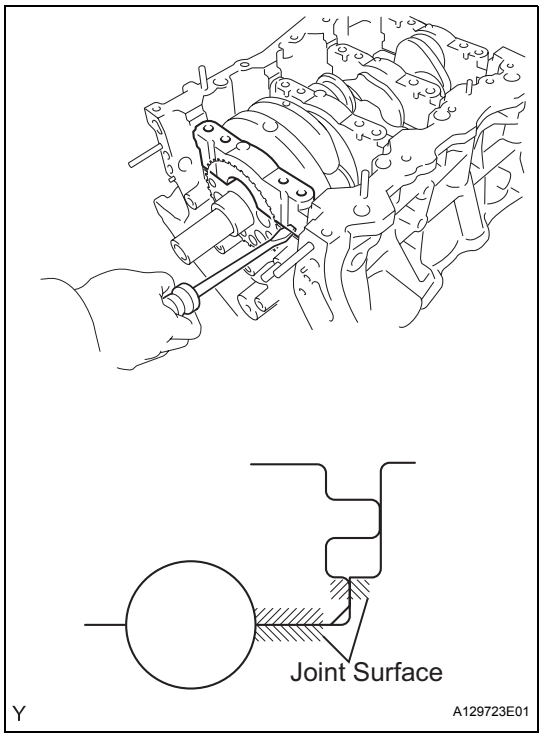

(c) Using a screwdriver, pry out main bearing caps. Remove the 4 main bearing caps and lower bearings.
NOTICE:
- **Pull up the main cap little by little to the right and the left in turns.**
- **Be careful not to damage the joint surface of the cylinder block and the main bearing caps.**

62. REMOVE CRANKSHAFT BEARING
HINT:
Arrange the removed parts in the correct order.

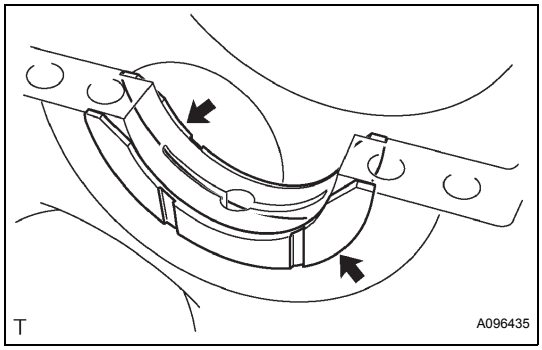

63. REMOVE CRANKSHAFT THRUST WASHER SET
(a) Remove the upper bearings and upper thrust washers from the cylinder block.

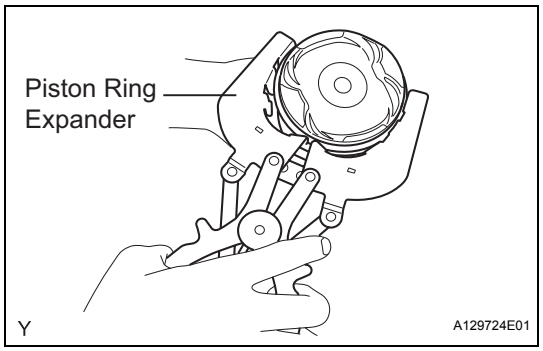

64. REMOVE PISTON RING SET

(a) Using a piston ring expander, remove the 2 compression rings.

(b) Using a piston ring expander, remove the 2 side rails.

(c) Remove the oil ring expander by hand.
HINT:
Arrange the piston rings in the correct order.

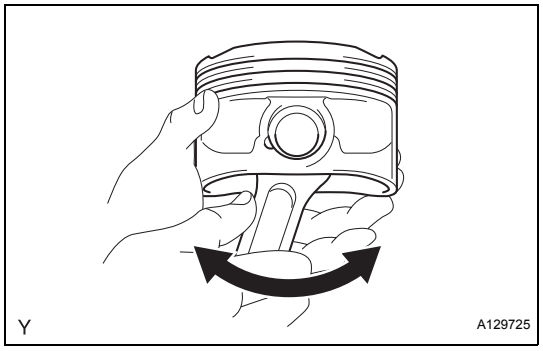

65. REMOVE PISTON SUB-ASSEMBLY WITH PIN

(a) Check the fitting condition between the piston and piston pin.

(1) Try to move the piston back and forth on the piston pin.
If any movement is felt, replace the piston and pin as a set.

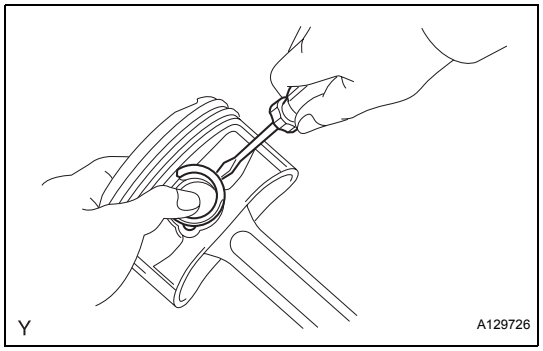

(b) Disconnect the connecting rod from the piston.

(1) Using a screwdriver, pry off the snap rings from the piston.

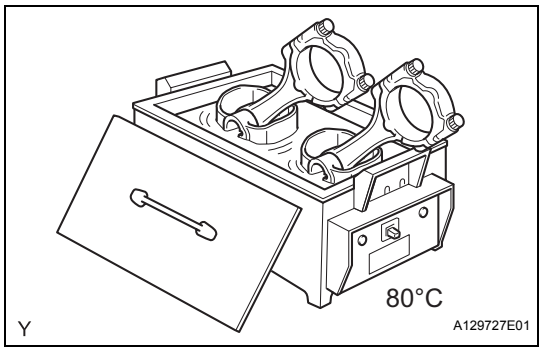

(2) Gradually heat the piston to approximately 80°C (176°F).

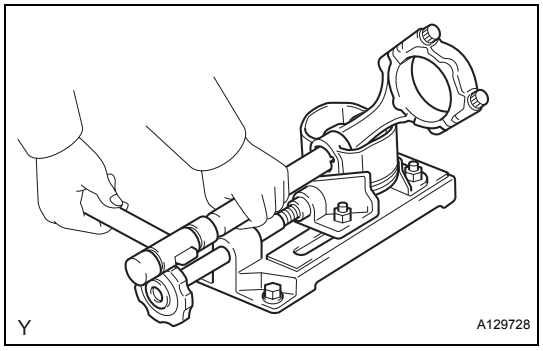

(3) Using a brass bar and plastic hammer, lightly tap out the piston pin and remove the connecting rod.
HINT:
- The piston and pin are a matched set.
- Arrange the pistons, pins, rings, connecting rods and bearings in the correct order.

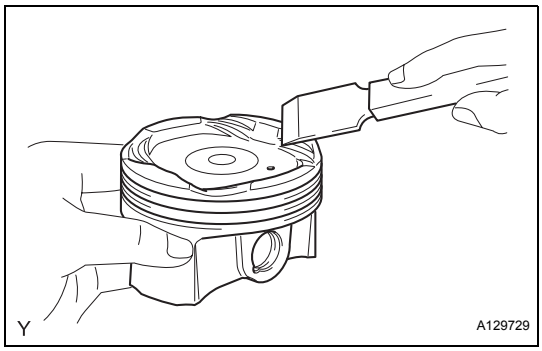

(c) Using a gasket scraper, remove the carbon from the piston top.

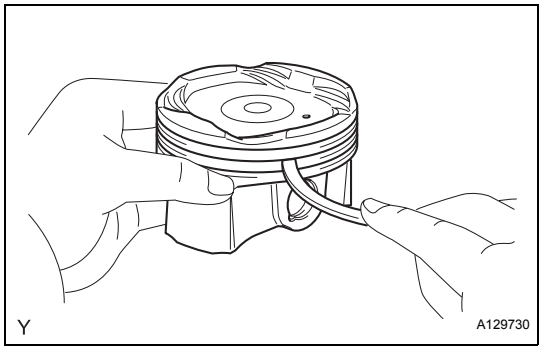

(d) Using a groove cleaning tool or broken ring, clean the piston ring grooves.

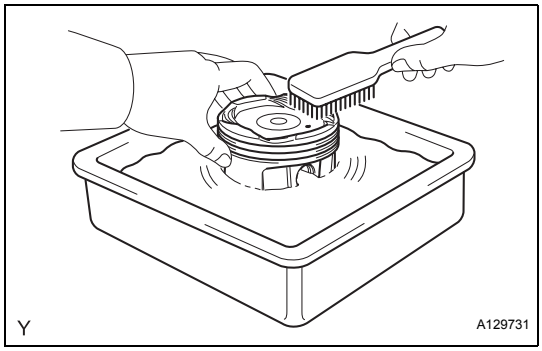

(e) Using solvent and a brush, thoroughly clean the piston.
NOTICE:
Do not use a wire brush.

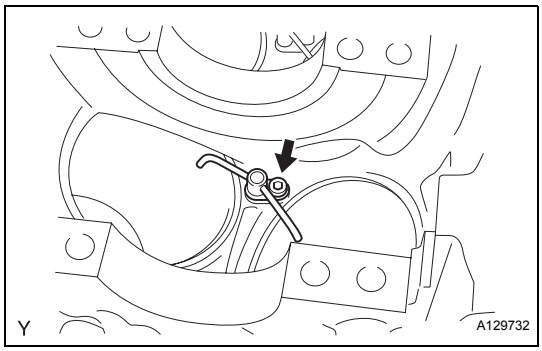

66. REMOVE SUB-ASSEMBLY OIL NOZZLE NO.1

(a) Using a 5 mm hexagon wrench, remove the 3 oil nozzles.

(b) Check the oil nozzles for damage or clogging.
If necessary, replace the oil nozzle.

INSPECTION

1. INSPECT VALVE LASH ADJUSTER ASSEMBLY

NOTICE:

- **Keep the lash adjuster free from dirt and foreign objects.**
- **Only use clean engine oil.**

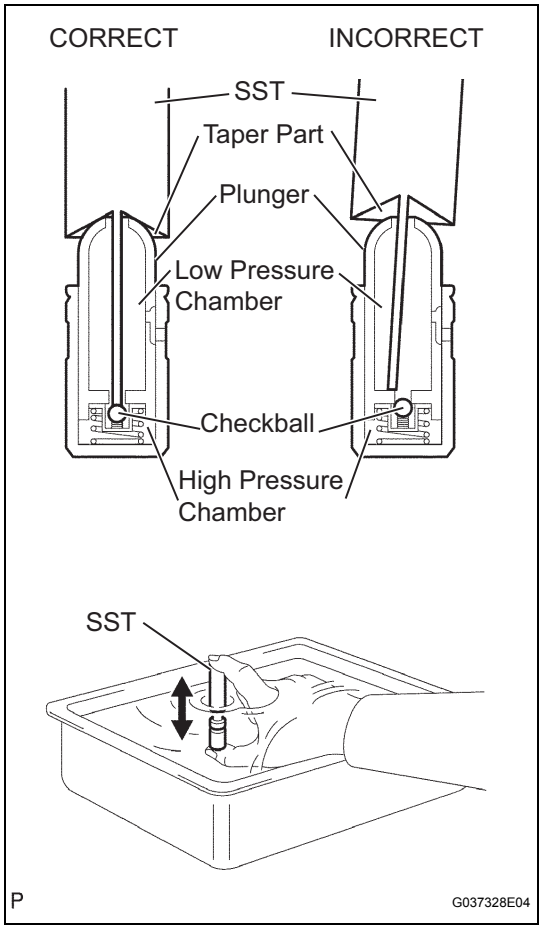

(a) Place the lash adjuster into a container full of engine oil.

(b) Insert SST's tip into the lash adjuster's plunger and use the tip to press down on the check ball inside the plunger.
SST 09276-75010

(c) Squeeze the SST and lash adjuster together to move the plunger up and down 5 to 6 times.

(d) Check the movement of the plunger and bleed the air.
OK:
Plunger moves up and down.
NOTICE:
When bleeding high-pressure air from the compression chamber, make sure that the tip of the SST is actually pressing the checkball as shown in the illustration. If the checkball is not pressed, air will not bleed.

(e) After bleeding the air, remove SST. Then quickly and firmly press the plunger with a finger.
OK:
Plunger is very difficult to move.
If the result is not as specified, replace the lash adjuster.

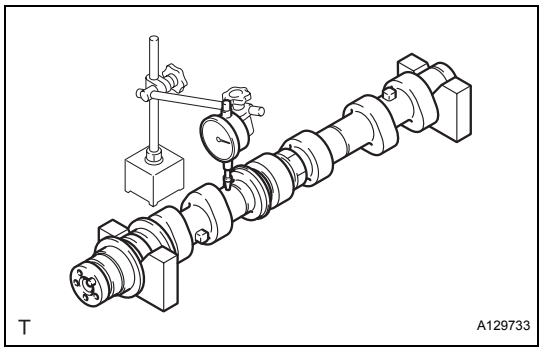

2. INSPECT CAMSHAFTS

(a) Inspect camshaft for runout.

(1) Place the camshaft on V-blocks.

(2) Using a dial indicator, measure the circle runout at the center journal.
Maximum circle runout:
0.04 mm (0.0016 in.)
If the circle runout is greater than the maximum, replace the camshaft.
HINT:
Check the oil clearance after replacing the camshaft.

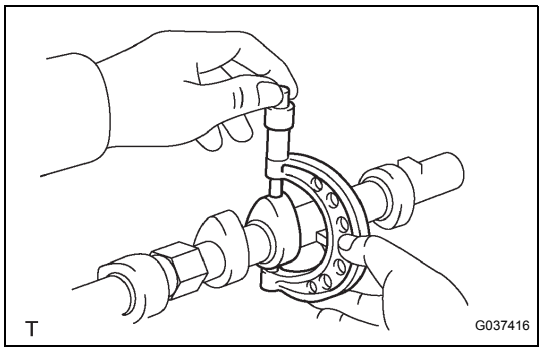

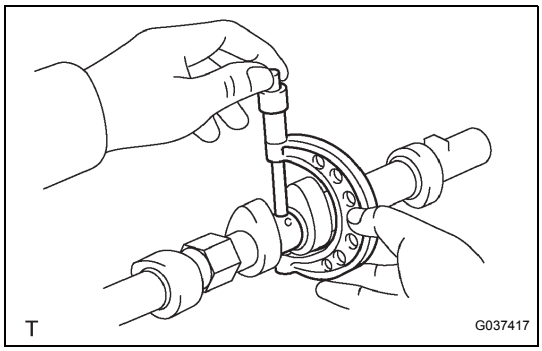

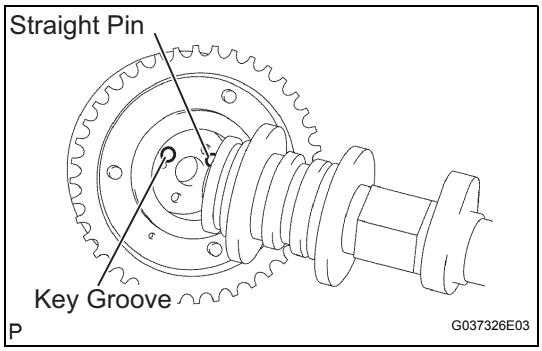

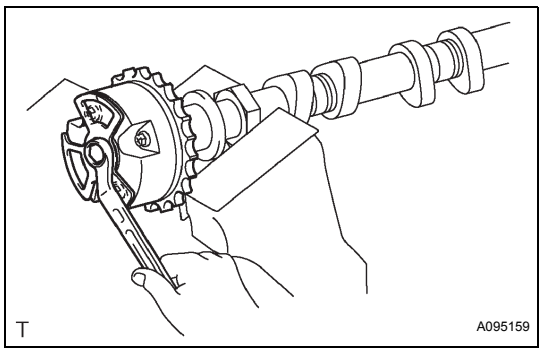

(b) Using a micrometer, measure the cam lobe height.
Standard cam lobe height

Item	Specification
Intake	44.316 to 44.416 mm (1.7447 to 1.7487 in.)
Exhaust	44.262 to 44.362 mm (1.7426 to 1.7465 in.)

Maximum cam lobe height

Item	Specification
Intake	44.166 mm (1.7388 in.)
Exhaust	44.112 mm (1.7367 in.)

(c) Using a micrometer, measure the journal diameter.
Standard journal diameter

Item	Specification
No. 1 journal	35.946 to 35.960 mm (1.4152 to 1.4157 in.)
Other journal	25.959 to 25. 975 mm (1.0220 to 1.0226 in.)

If the journal diameter is not as specified, check the oil clearance.

3. INSPECT CAMSHAFT TIMING GEAR ASSEMBLY

(a) Clamp the camshaft in a vise.
NOTICE:
Be careful not to damage the camshaft in the vise.

(b) Put the camshaft timing gear and camshaft together by aligning the key groove and straight pin.

(c) Lightly press the gear against the camshaft, and turn the gear. Push further at the position where the pin enters the groove.
CAUTION:
Be sure not to turn the camshaft timing gear in the retard direction (the right angle).

(d) Check that there is no clearance between the gear's fringe and the camshaft.

(e) Tighten the fringe bolt with the camshaft timing gear fixed.
Torque: 100 N*m (1,020 kgf*cm, 74 ft.*lbf)

(f) Check the lock of the camshaft timing gear.
(1) Clamp the camshaft in a vise, and confirm that the camshaft timing gear is locked.
NOTICE:
Be careful not to damage the camshaft.

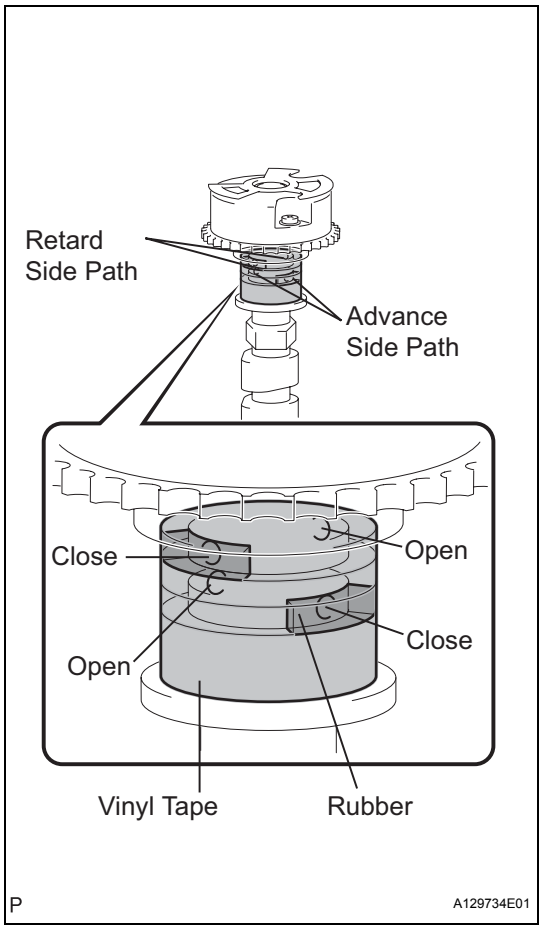

(g) Release the lock pin.
(1) Cover the 4 oil paths of the cam journal with vinyl tape as shown in the illustration.
HINT:
2 advance side paths are provided in the groove of the camshaft. Plug one of the paths with a rubber piece.
(2) Break through the tape of the advance side path and the retard side path on the opposite side to the hole of the advance side path, as shown in the illustration.

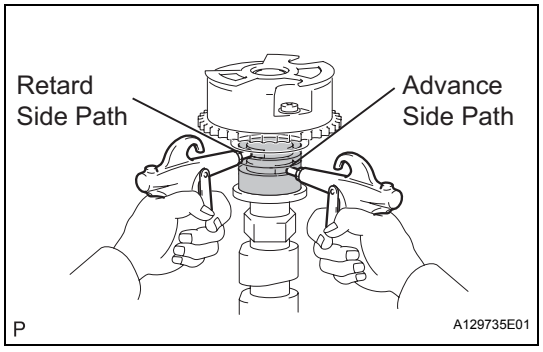

(3) Apply approximately 200 kPa (2.0 kgf/cm^2, 28 psi) of air pressure to the two broken paths.
CAUTION:
Cover the paths with a shop rag or piece of cloth when applying pressure to keep oil from splashing.

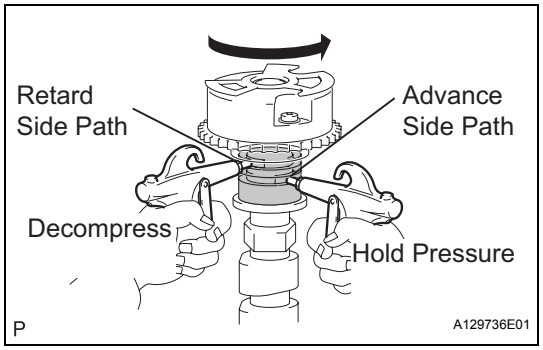

(4) Check that the camshaft timing gear revolves in the advance direction when reducing the air pressure applied to the retard side path.
HINT:
This operation releases the lock pin for the most retarded position.
(5) When the camshaft timing gear reaches the most advanced position, release the air pressure from the retard side path and advance side path, in that order.
NOTICE:
Do not release the air pressure from the advance side path first. The gear may abruptly shift in the retard direction and break the lock pin.

(h) Check for smooth rotation.
(1) Turn the camshaft timing gear within its movable range (21°) 2 or 3 times, but do not turn it to the most retarded position. Make sure that the gear turns smoothly.
CAUTION:
Do not use air pressure to perform the smooth operation check.

(i) Check the lock in the most retarded position.
(1) Confirm that the camshaft timing gear is locked at the most retarded position.

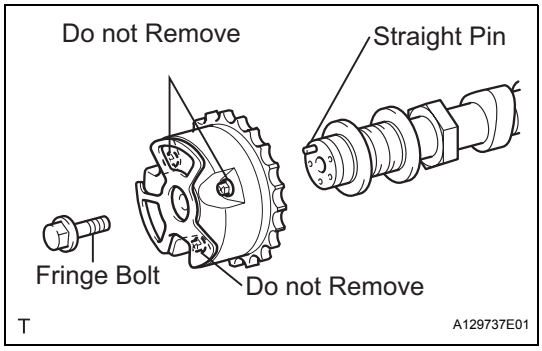

(j) Remove the fringe bolt and camshaft timing gear.
NOTICE:
- **Be sure not to remove the other 3 bolts.**
- **If planning to reuse the gear, be sure to release the straight pin lock before installing the gear.**

4. INSPECT CAMSHAFT TIMING EXHAUST GEAR ASSEMBLY

(a) Clamp the camshaft in a vise.
NOTICE:
Be careful not to damage the camshaft in the vise.

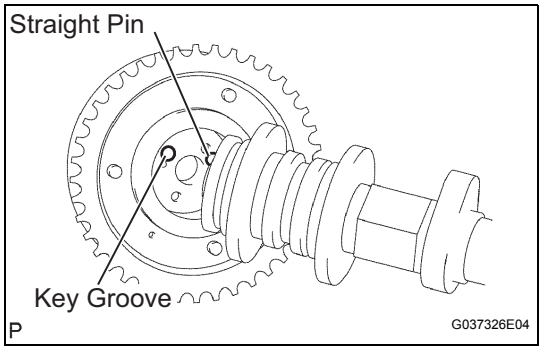

(b) Put the camshaft timing exhaust gear and camshaft together by aligning the key groove and straight pin.

(c) Lightly press the gear against the camshaft, and turn the gear. Push further at the position where the pin enters the groove.
CAUTION:
Be sure not to turn the camshaft timing exhaust gear in the retard direction (the right angle).

(d) Check that there is no clearance between the gear's fringe and the camshaft.

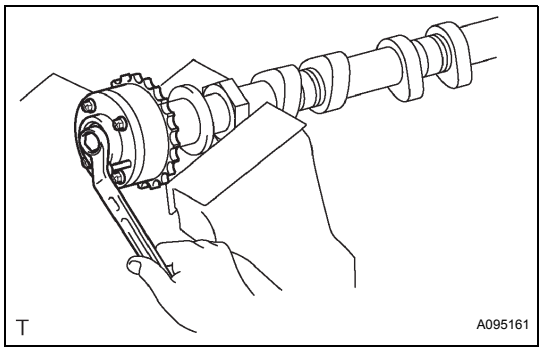

(e) Tighten the fringe bolt with the camshaft timing exhaust gear fixed.
Torque: 100 N*m (1,020 kgf*cm, 74 ft.*lbf)

(f) Check the camshaft timing exhaust gear lock.
(1) Make sure that the camshaft timing exhaust gear is locked.

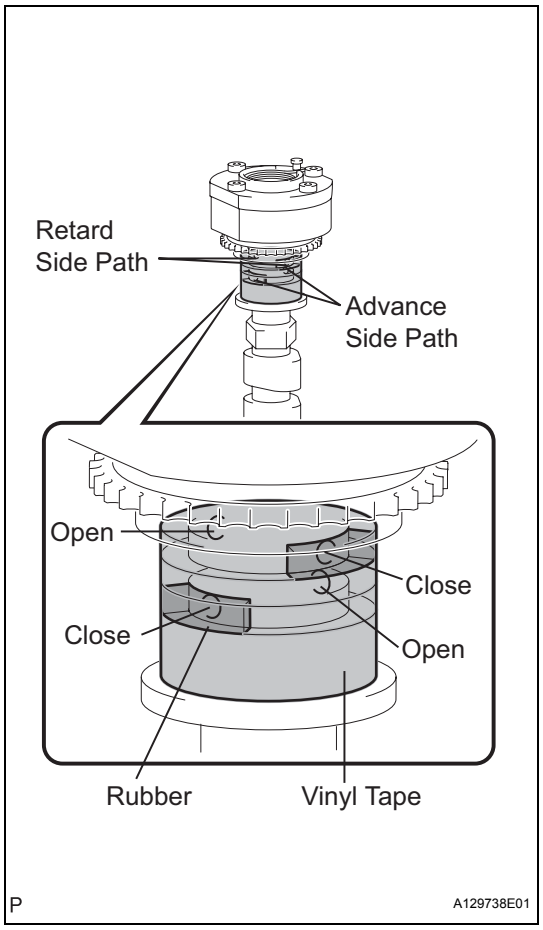

(g) Release the lock pin.
(1) Cover the 4 oil paths of the cam journal with vinyl tape as shown in the illustration.
HINT:
4 oil paths are provided in the groove. Plug 2 paths with rubber pieces.
(2) Prick a hole in the tape placed on the advance side path. Prick a hole in the tape placed on the retard side path, on the opposite side to that of the advance side path, as shown in the illustration.

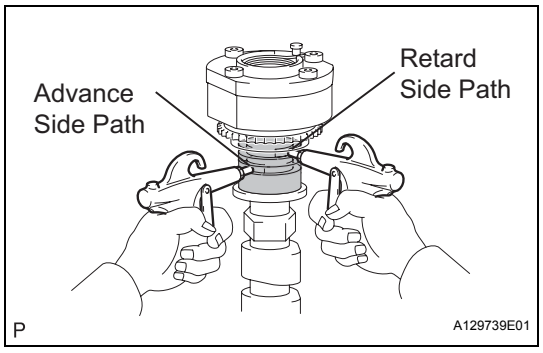

(3) Apply approximately 200 kPa (2.0 kgf/cm^2, 28 psi) of air pressure to the two broken paths (the advance side path and the retard side path).
NOTICE:
Cover the paths with a shop rag or piece of cloth when applying pressure to keep oil from splashing.

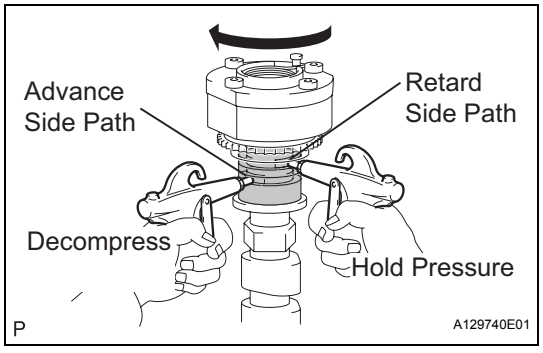

(4) Make sure that the camshaft timing exhaust gear turns in the retard direction when reducing the air pressure applied to the advance side path.
HINT:
The lock pin is released and the camshaft timing exhaust gear turns in the retard direction.

(5) When the camshaft timing exhaust gear comes to the most retarded position, release the air pressure from the advance side path, and then release the air pressure from the retard side path.

NOTICE:

Be sure to release the air pressure from the advance side path first. If the air pressure of the retard side path is released first, the camshaft timing exhaust gear may abruptly shift in the advance direction and break the lock pin or other parts.

(h) Check for smooth rotation.

(1) Turn the camshaft timing exhaust gear within its movable range (18.5°) 2 or 3 times, but do not turn it to the most advanced position. Make sure that the gear turns smoothly.

NOTICE:

When the air pressure is released from the advance side path and then from the retard side path, the gear automatically returns to the most advanced position due to the advance assist spring operation and locks. Gradually release the air pressure from the retard side path before performing the smooth rotation check.

(i) Check the lock at the most advanced position.

(1) Make sure that the camshaft timing exhaust gear is locked at the most advanced position.

(j) Remove the fringe bolt and camshaft timing exhaust gear.

NOTICE:

- **Be sure not to remove the other 3 bolts.**
- **If planning to reuse the gear, be sure to release the straight pin lock before installing the gear.**

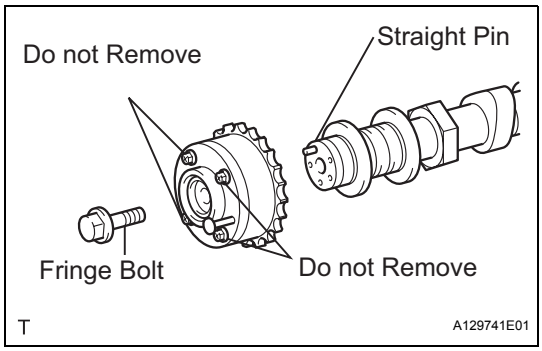

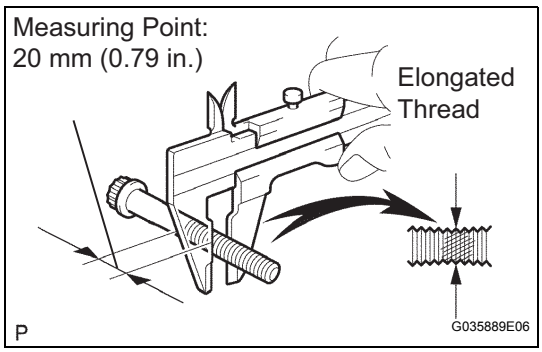

5. INSPECT CYLINDER HEAD SET BOLT

(a) Using vernier calipers, measure the minimum diameter of the elongated thread at the measuring point.

Standard outside diameter:
10.85 to 11.00 mm (0.4272 to 0.4331 in.)
Minimum outside diameter:
10.70 mm (0.4213 in.)

HINT:

- If a visual check reveals no excessively thin areas, check the center of the bolt (see illustration) and find the area that has the lowest diameter.

- If the diameter is less than the minimum, replace the cylinder head bolt.

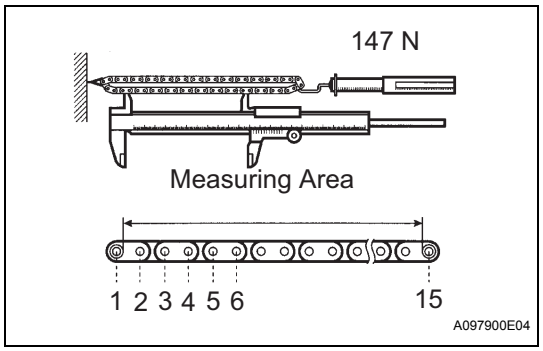

6. INSPECT CHAIN SUB-ASSEMBLY

(a) Pull the chain with a force of 147 N (15 kgf, 33 lbf) as shown in the illustration.

(b) Using vernier calipers, measure the length of 15 links.

Maximum chain elongation:
136.9 mm (5.390 in.)

If the elongation is greater than the maximum, replace the chain.

NOTICE:
Perform the same measurement by pulling at random in 3 or more places to obtain an average.

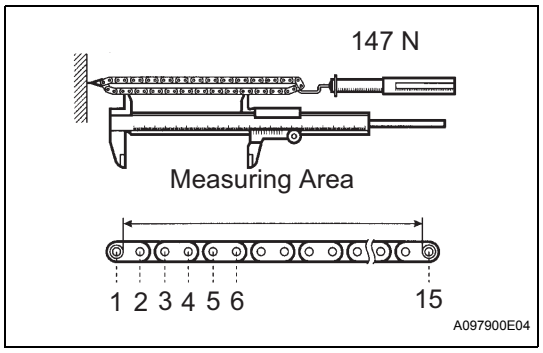

7. INSPECT NO.2 CHAIN SUB-ASSEMBLY

(a) Pull the chain with a force of 147 N (15 kgf, 33 lbf) as shown in the illustration.

(b) Using vernier calipers, measure the length of 15 links.

Maximum chain elongation:
137.6 mm (5.417 in.)

If the elongation is greater than the maximum, replace the chain.

NOTICE:
Perform the same measurement by pulling at random in 3 or more places to obtain an average.

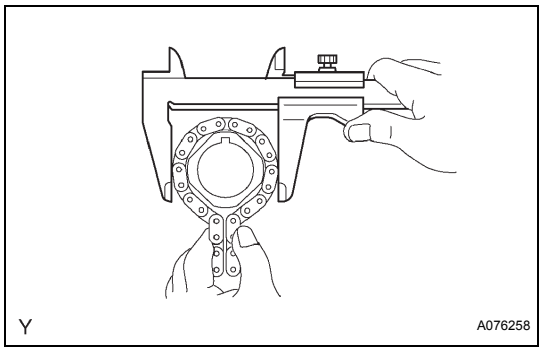

8. INSPECT CRANKSHAFT TIMING GEAR

(a) Wrap the chain around the sprocket.

(b) Using vernier calipers, measure the sprocket diameter with the chain.

Minimum sprocket diameter (w/ chain):
61.4 mm (2.417 in.)

HINT:
- The vernier calipers must contact the chain rollers for the measurement.
- If the diameter is less than the minimum, replace the chain and sprocket.

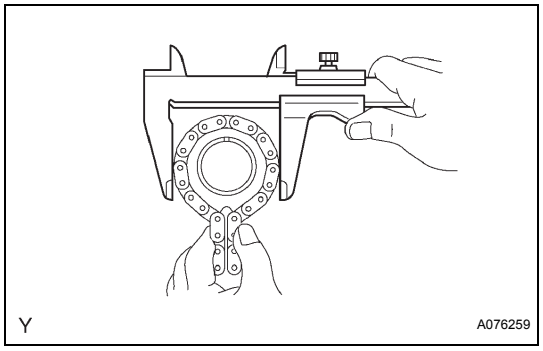

9. INSPECT IDLE SPROCKET ASSEMBLY

(a) Wrap the chain around the sprocket.

(b) Using vernier calipers, measure the sprocket diameter with the chain.

Minimum sprocket diameter (w/ chain):
61.4 mm (2.417 in.)

HINT:
- The vernier calipers must contact the chain rollers for the measurement.
- If the diameter is less than the minimum, replace the chain and sprocket.

EM

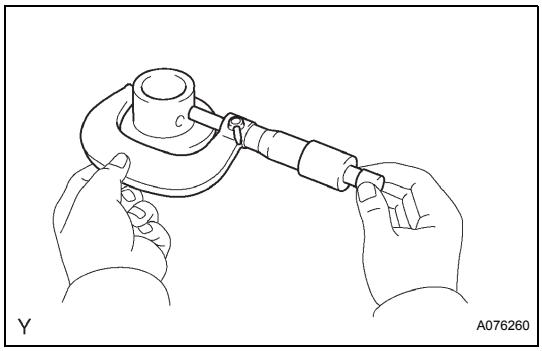

10. INSPECT IDLE GEAR SHAFT OIL CLEARANCE

(a) Using a micrometer, measure the idle gear shaft diameter.

Idle gear shaft diameter:
30.000 to 30.013 mm (1.1811 to 1.1816 in.)

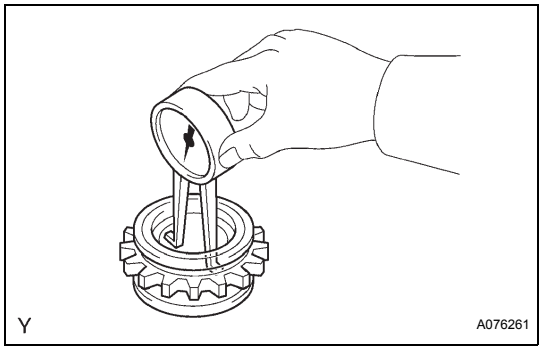

(b) Using a caliper gauge, measure the inside diameter of the idle gear.

Idle gear inside diameter:
30.020 to 30.033 mm (1.1819 to 1.1824 in.)

(c) Subtract the idle gear shaft diameter measurement from the idle gear inside diameter measurement.

Standard oil clearance:
0.007 to 0.033 mm (0.0003 to 0.0013 in.)

Maximum oil clearance:
0.083 mm (0.0033 in.)

If the thrust oil clearance is greater than the maximum, replace the idle gear shaft and idle gear.

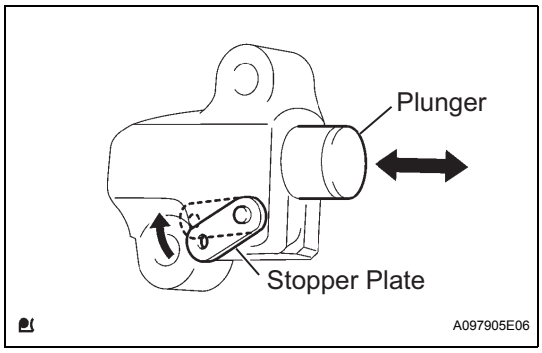

11. INSPECT CHAIN TENSIONER ASSEMBLY NO.1

(a) Move the stopper plate upward to release the lock. Push the plunger and check that it moves smoothly. If necessary, replace the chain tensioner assembly No. 1.

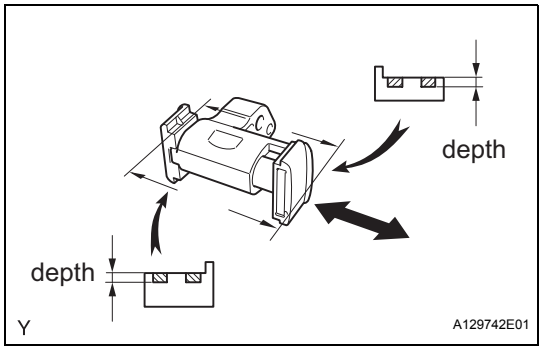

12. INSPECT CHAIN TENSIONER ASSEMBLY NO.2

(a) Check that the plunger moves smoothly.

(b) Measure the worn depth of the chain tensioner slipper.

Maximum depth:
0.9 mm (0.035 in.)

If the depth is greater than the maximum, replace the chain tensioner No. 2.

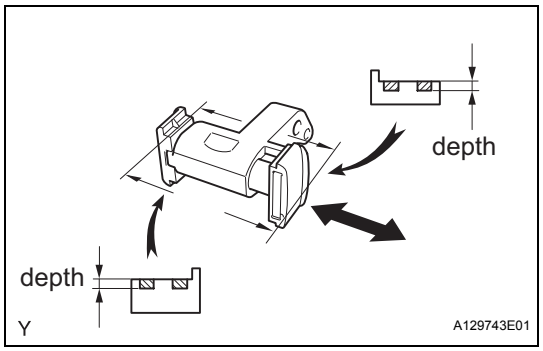

13. INSPECT CHAIN TENSIONER ASSEMBLY NO.3

(a) Check that the plunger moves smoothly.

(b) Measure the worn depth of the chain tensioner slipper.

Maximum depth:

0.9 mm (0.035 in.)

If the depth is greater than the maximum, replace the chain tensioner No . 3.

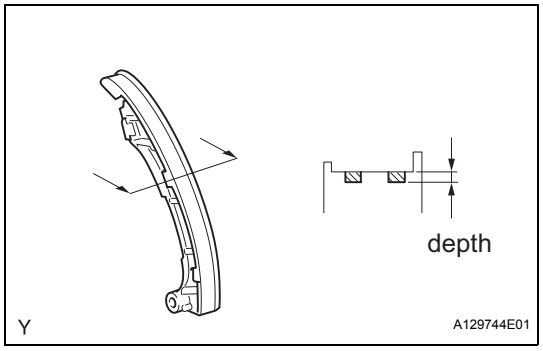

14. INSPECT CHAIN TENSIONER SLIPPER

(a) Measure the worn depth of the chain tensioner slipper.

Maximum depth:

1.0 mm (0.039 in.)

If the depth is greater than the maximum, replace the chain tensioner slipper.

EM

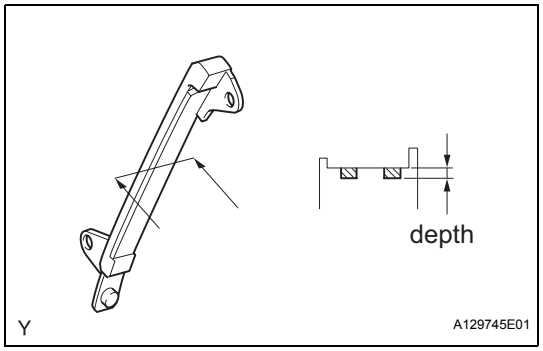

15. INSPECT CHAIN VIBRATION DAMPER NO.1

(a) Measure the worn depth of the chain vibration damper No. 1.

Maximum depth:

1.0 mm (0.039 in.)

If the depth is greater than the maximum, replace the chain vibration damper No .1.

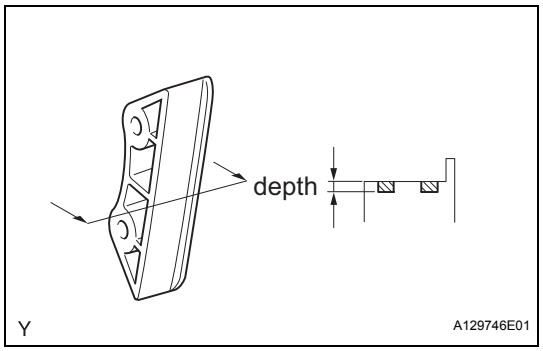

16. INSPECT CHAIN VIBRATION DAMPER NO.2

(a) Measure the worn depth of the chain vibration damper No. 2.

Maximum depth:

1.0 mm (0.039 .)

If the depth is greater than the maximum, replace the chain vibration damper No . 2.

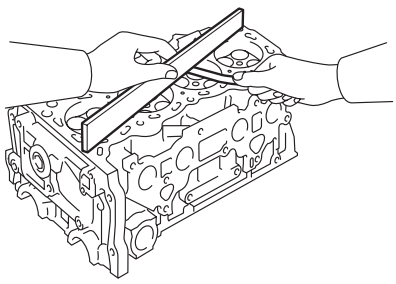

Cylinder head lower side:

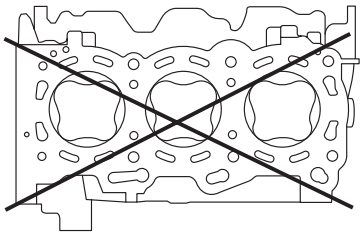

Intake side:

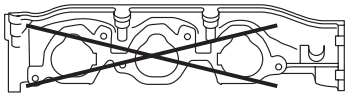

Exhaust side:

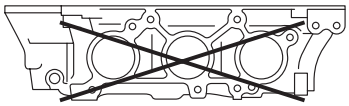

T

A129747E01

17. INSPECT CYLINDER HEAD SUB-ASSEMBLY

(a) Using a precision straight edge and feeler gauge, measure the warpage of the contact surface of the cylinder block and manifolds.

Standard warpage

Item	Warpage
Cylinder head lower	0.05 mm (0.0020 in.)
Intake	0.08 mm (0.0031 in.)
Exhaust	0.08 mm (0.0031 in.)

Maximum warpage:
0.10 mm (0.0039 in.)

If the warpage is greater than the maximum, replace the cylinder head.

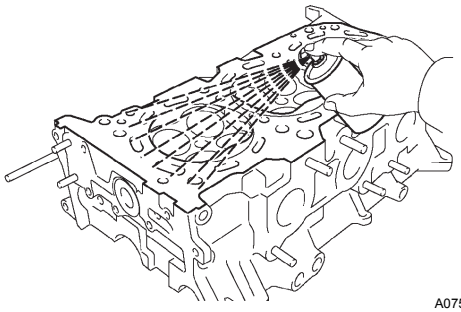

A075610

(b) Using a dye penetrate, check the intake ports, exhaust ports and cylinder surface for cracks.
If cracked, replace the cylinder head.

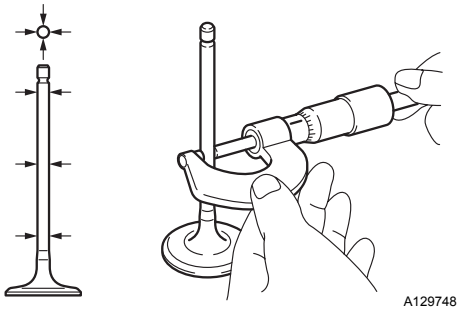

T

A129748

18. INSPECT INTAKE VALVE

(a) Using a micrometer, measure the diameter of the valve stem.

Valve stem diameter:
5.470 to 5.485 mm (0.2154 to 0.2159 in.)

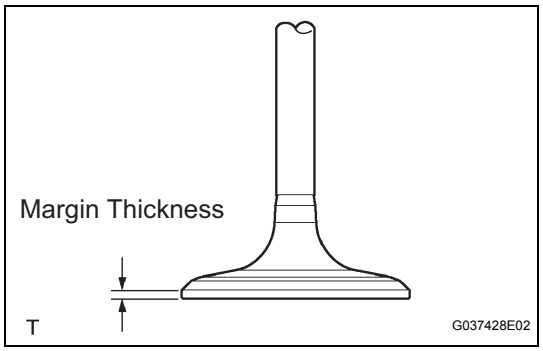

(b) Using vernier calipers, measure the valve head margin thickness.
Standard margin thickness:
1.0 mm (0.0394 in.)
Minimum margin thickness:
0.5 mm (0.0197 in.)
If the margin thickness is less than the minimum, replace the intake valve.

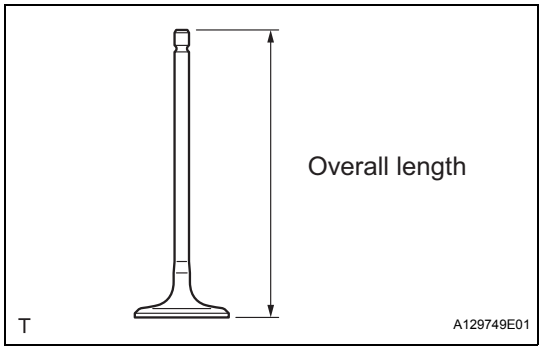

(c) Using vernier calipers, measure the valve's overall length.
Standard overall length:
105.85 mm (4.1673 in.)
Minimum overall length:
105.35 mm (4.1476 in.)
If the overall length is less than the minimum, replace the intake valve.

EM

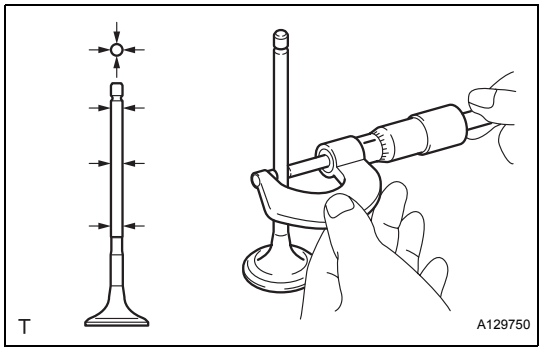

19. INSPECT EXHAUST VALVE

(a) Using a micrometer, measure the diameter of the valve stem.
Valve stem diameter:
5.465 to 5.480 mm (0.2151 to 0.2157 in.)

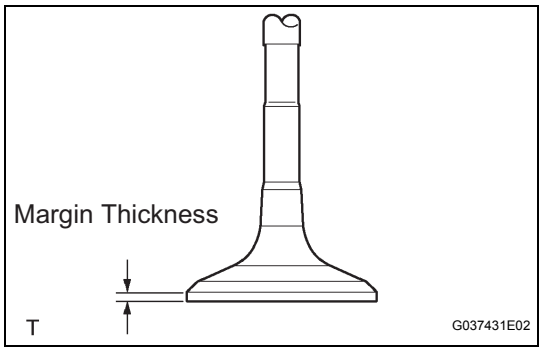

(b) Using vernier calipers, measure the valve head margin thickness.
Standard margin thickness:
1.0 mm (0.0394 in.)
Minimum margin thickness:
0.5 mm (0.0197 in.)
If the margin thickness is less than the minimum, replace the exhaust valve.

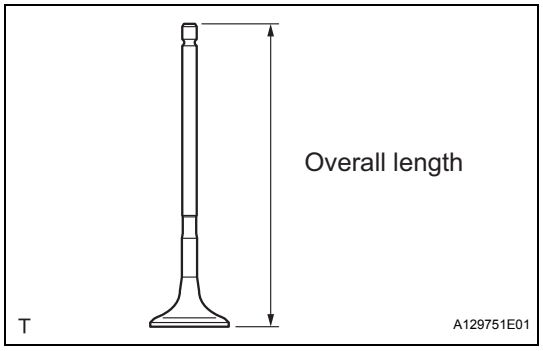

(c) Using vernier calipers, measure the valve's overall length.
Standard overall length:
111.40 mm (4.3464 in.)
Minimum overall length:
109.90 mm (4.3268 in.)
If the overall length is less than the minimum, replace the exhaust valve.

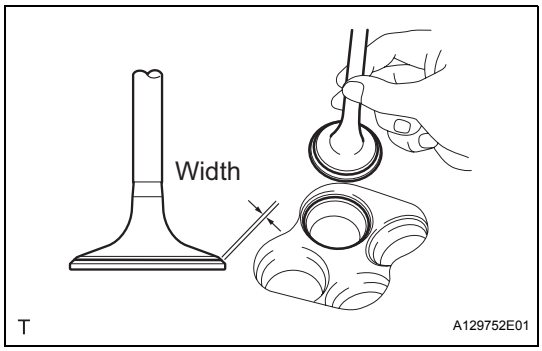

20. INSPECT INTAKE VALVE SEATS

(a) Apply a light coat of prussian blue (or white lead) to the valve face.
(b) Lightly press the valve face against the valve seat.
(c) Check the valve face and valve seat by using the following procedure.
  (1) If prussian blue appears around the entire valve face, the valve face is concentric. If not, replace the valve.
  (2) If prussian blue appears around the entire valve seat, the guide and valve face are concentric. If not, resurface the valve seat.
  (3) Check that the valve seat contacts in the middle of the valve face with the width between 1.1 and 1.5 mm (0.043 and 0.059 in.).

EM

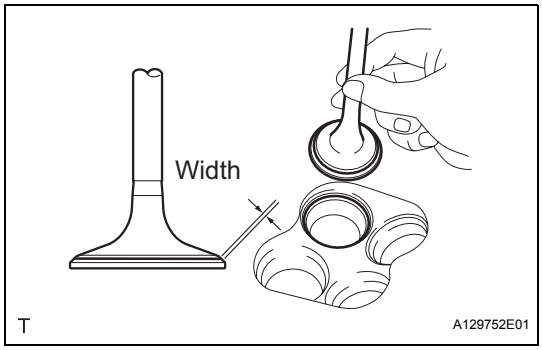

21. INSPECT EXHAUST VALVE SEATS

(a) Apply a light coat of prussian blue (or white lead) to the valve face.
(b) Lightly press the valve face against the valve seat.
(c) Check the valve face and valve seat by using to the following procedure.
  (1) If prussian blue appears around the entire valve face, the valve face is concentric. If not, replace the valve.
  (2) If prussian blue appears around the entire valve seat, the guide and valve face are concentric. If not, resurface the valve seat.
  (3) Check that the valve seat contacts in the middle of the valve face with the width between 1.2 and 1.6 mm (0.047 and 0.063 in.).

22. REPAIR INTAKE VALVE SEATS

NOTICE:
Keep the lip free from foreign matter.

(a) If the seating is too high on the valve face, use 30° and 45° cutters to correct the seat.

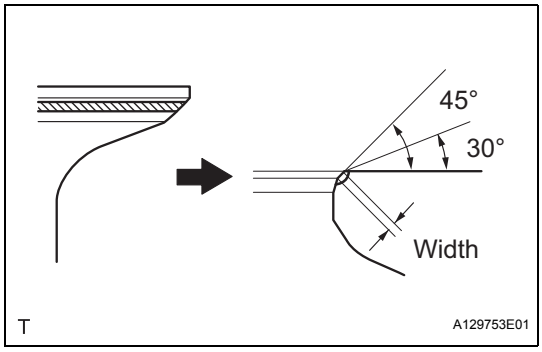

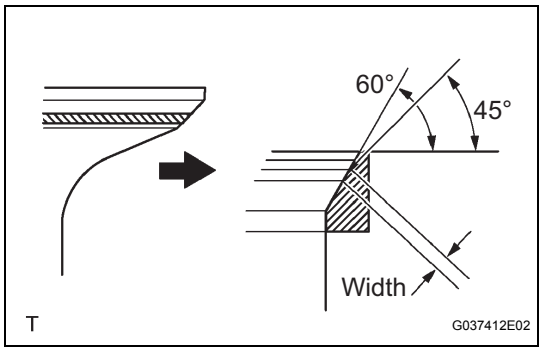

(b) If the seating is too low on the valve face, use 60° and 45° cutters to correct the seat.
(c) Handrub the valve and valve seat with an abrasive compound.
(d) Check the valve seating position.

23. REPAIR EXHAUST VALVE SEATS

NOTICE:
Keep the lip free from foreign matter.

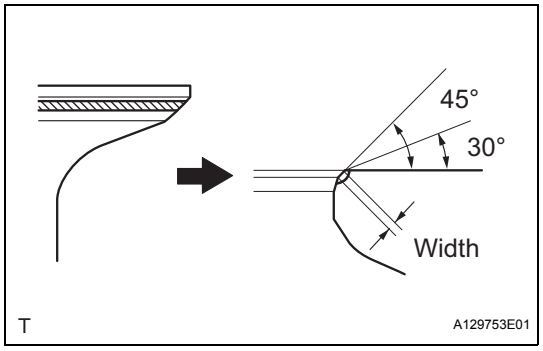

(a) If the seating is too high on the valve face, use 30° and 45° cutters to correct the seat.

EM

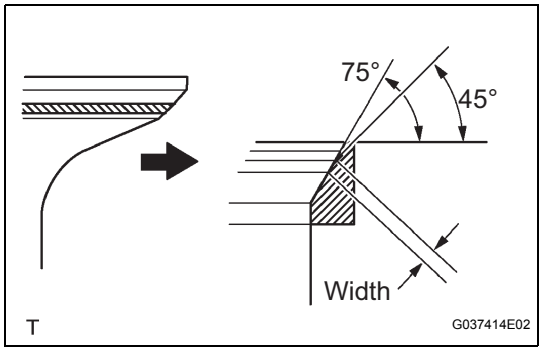

(b) If the seating is too low on the valve face, use 45° and 75° cutters to correct the seat.
(c) Handrub the valve and valve seat with an abrasive compound.
(d) Check the valve seating position.

24. INSPECT INNER COMPRESSION SPRING

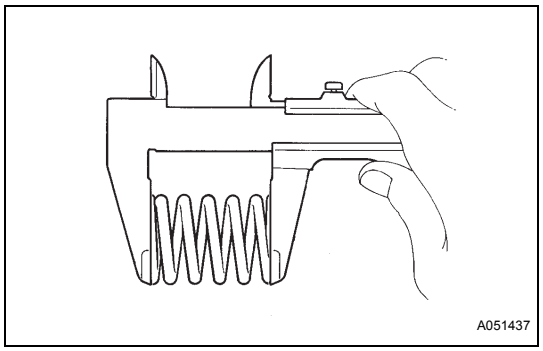

(a) Using vernier calipers, measure the free length of the inner compression spring.
Free length:
45.46 mm (1.7898 in.)
If the free length is not as specified, replace the spring.

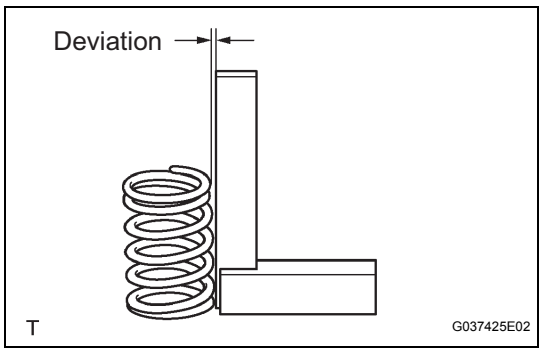

(b) Using a steel square, measure the deviation of the inner compression spring.
Maximum deviation:
1.0 mm (0.039 in.)
Maximum angle (reference):
2°
If the deviation is greater than the maximum, replace the spring.

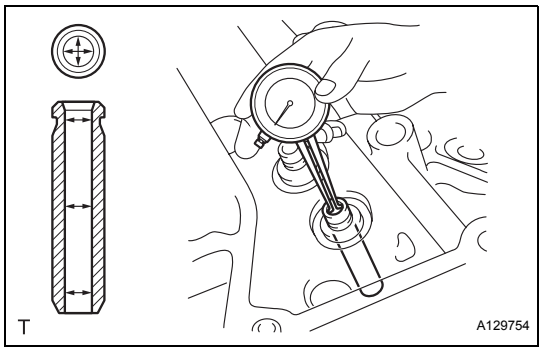

25. INSPECT VALVE GUIDE BUSH OIL CLEARANCE

(a) Using a caliper gauge, measure the inside diameter of the guide bush.

Bush inside diameter:
5.510 to 5.530 mm (0.2169 to 0.2177 in.)

(b) Subtract the valve stem diameter measurement from the guide bush inside diameter measurement.

Standard clearance

Item	Clearance
Intake	0.025 to 0.060 m (0.0010 to 0.0024 in.)
Exhaust	0.030 to 0.065 mm (0.0012 to 0.0026 in.)

Maximum oil clearance

Item	Clearance
Intake	0.08 mm (0.0032 in.)
Exhaust	0.10 mm (0.0039 in.)

HINT:

- If the clearance is greater than the maximum, replace the intake valve and intake guide bush.
- If the clearance is greater than the maximum, replace the exhaust valve and exhaust guide bush.

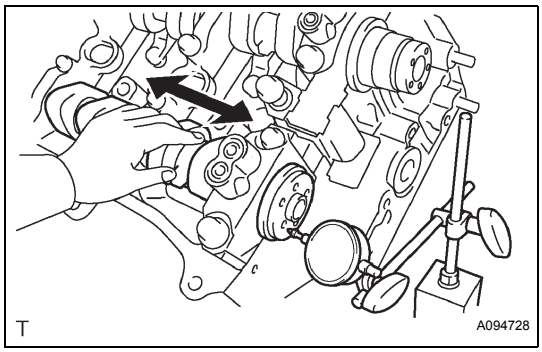

26. INSPECT CAMSHAFT THRUST CLEARANCE

(a) Install the RH bank camshafts (See page EM-129).

(b) Using a dial indicator, measure the thrust clearance while moving the camshaft back and forth.

Standard thrust clearance:
0.08 to 0.13 mm (0.0031 to 0.0051 in.)
Maximum thrust clearance:
0.15 mm (0.006 in.)

If the thrust clearance is greater than the maximum, replace the cylinder head. If the thrust surface is damaged, replace the camshaft.

(c) Install the LH bank camshafts (See page EM-130).

(d) Using a dial indicator, measure the thrust clearance while moving the camshaft back and forth.

Standard thrust clearance:
0.08 to 0.13 mm (0.0031 to 0.0051 in.)
Maximum thrust clearance:
0.15 mm (0.006 in.)

If the thrust clearance is greater than the maximum, replace the cylinder head. If the thrust surface is damaged, replace the camshaft.

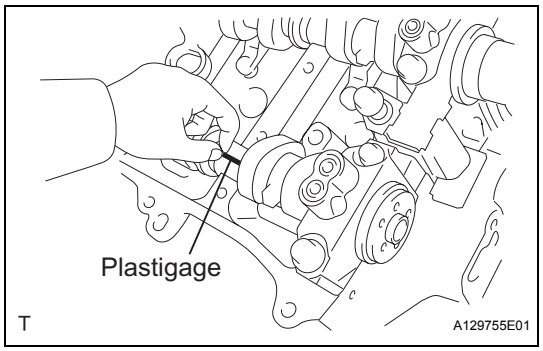

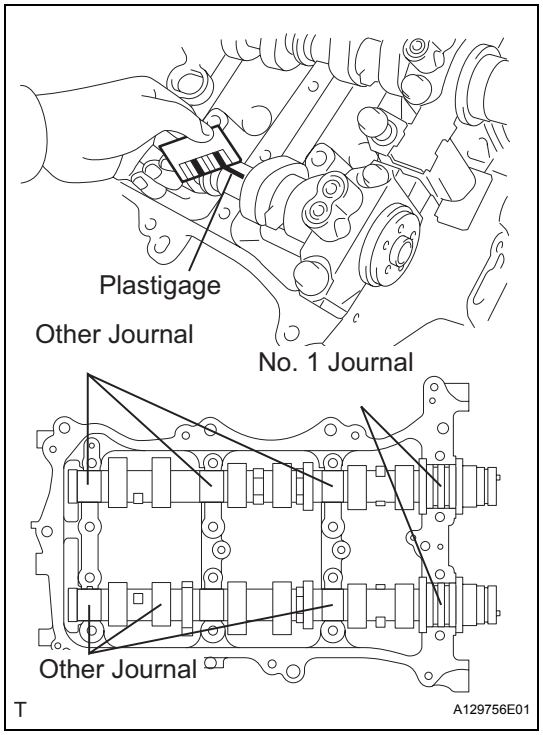

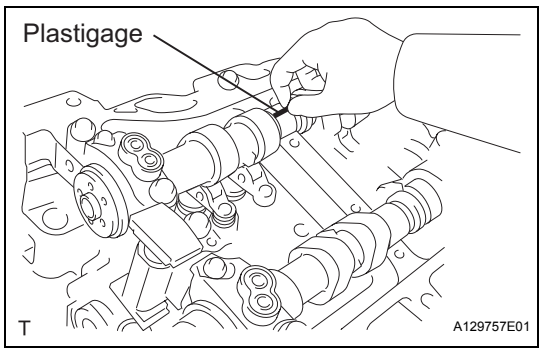

27. INSPECT CAMSHAFT OIL CLEARANCE

(a) Clean the bearing caps, camshaft housing and camshaft journals.
(b) Place the camshafts on the camshaft housing.
(c) Lay a strip of Plastigage across each of the camshaft journals.
(d) Install the bearing caps (See page EM-130).
NOTICE:
Do not turn the camshaft.
(e) Remove the bearing caps (See page EM-69).

(f) Measure the Plastigage at its widest point.
Standard oil clearance

Item	Oil Clearance
No. 1 journal	0.040 to 0.079 mm (0.0016 to 0.0031 in.)
Other journal	0.025 to 0.062 mm (0.00098 to 0.0024 in.)

Maximum oil clearance

Item	Oil Clearance
No. 1 journal	0.10 mm (0.0039 in.)
Other journal	0.09 mm (0.0035 in.)

If the oil clearance is greater than the maximum, replace the camshaft. If necessary, replace the camshaft housing.
(g) Clean the bearing caps, camshaft housing and camshaft journals.
(h) Place the camshafts on the camshaft housing.

(i) Lay a strip of Plastigage across each of the camshaft journals.
(j) Install the bearing caps (See page EM-130).
NOTICE:
Do not turn the camshaft.
(k) Remove the bearing caps (See page EM-69).

EM

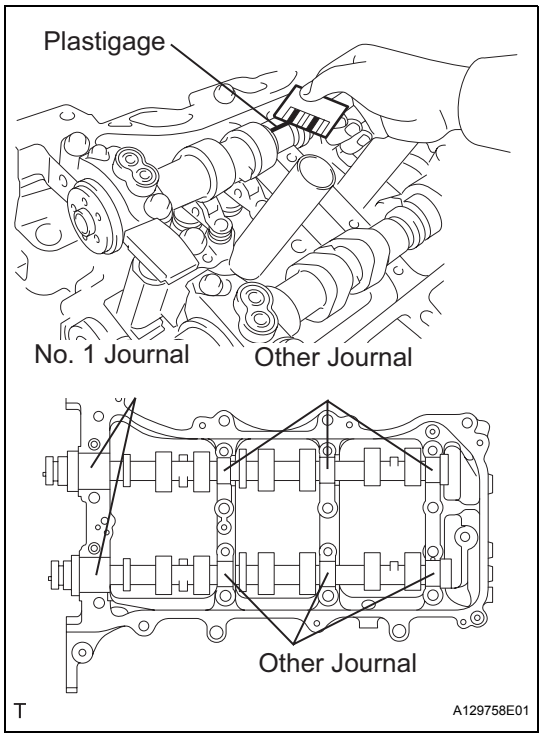

(l) Measure the Plastigage at its widest point.

Standard oil clearance

Item	Oil Clearance
No. 1 journal	0.040 to 0.079 mm (0.0016 to 0.0031 in.)
Other journal	0.025 to 0.062 mm (0.00098 to 0.0024 in.)

Maximum oil clearance

Item	Oil Clearance
No. 1 journal	0.10 mm (0.0039 in.)
Other journal	0.09 mm (0.0035 in.)

If the oil clearance is greater than the maximum, replace the camshaft. If necessary, replace the camshaft housing.

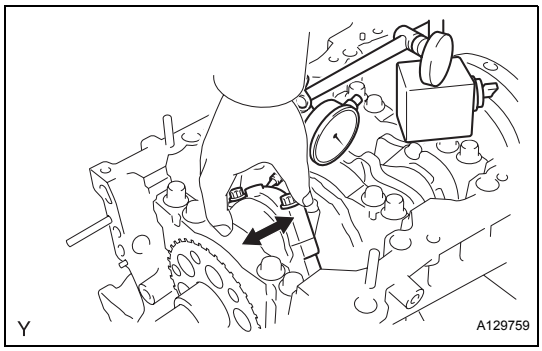

28. INSPECT CONNECTING ROD THRUST CLEARANCE

(a) Using a dial indicator, measure the thrust clearance while moving the connecting rod back and forth.

Standard thrust clearance:
0.15 to 0.40 mm (0.0059 to 0.0157 in.)
Maximum thrust clearance:
0.50 mm (0.020 in.)

If the thrust clearance is greater than the maximum, replace the connecting rod assemblies. If necessary, replace the crankshaft.

29. INSPECT CONNECTING ROD OIL CLEARANCE

(a) Check that the matchmarks on the connecting rod and cap are aligned to ensure the correct reassembly (Procedure "A").

HINT:
The matchmarks on the connecting rods and caps are provided to ensure correct reassembly.

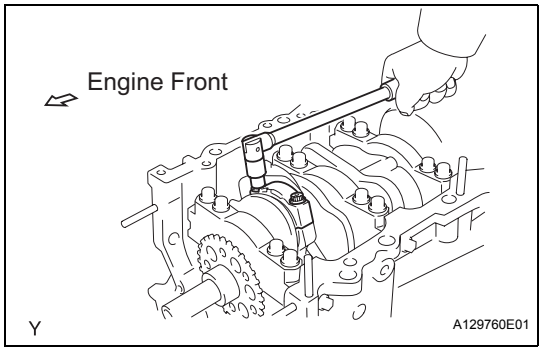

(b) Using SST, remove the 2 connecting rod cap bolts (Procedure "B").

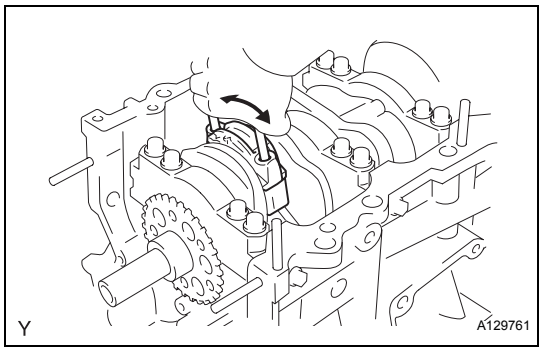

(c) Using the 2 removed connecting rod caps bolts, remove the connecting rod cap and lower bearing by wiggling the connecting rod cap right and left (Procedure "C").
HINT:
Keep the lower bearing inserted to the connecting rod cap.
(d) Clean the crank pin and bearing (Procedure "D").
(e) Check the crank pin and bearing for pitting and scratches (Procedure "E").

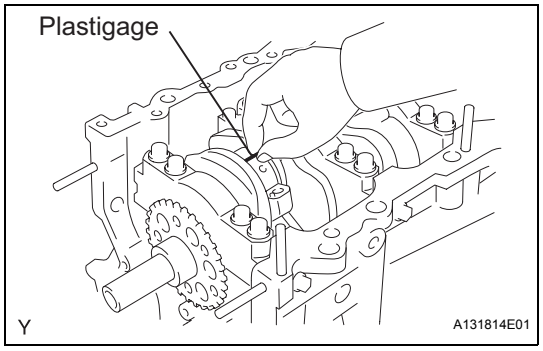

(f) Lay a strip of Plastigage on the crank pin (Procedure "F").

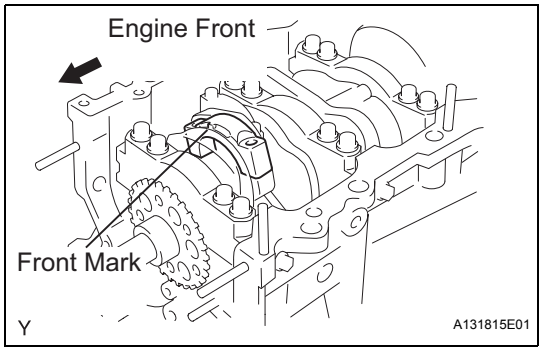

(g) Check that the front mark of the connecting rod cap is facing forward (Procedure "G").

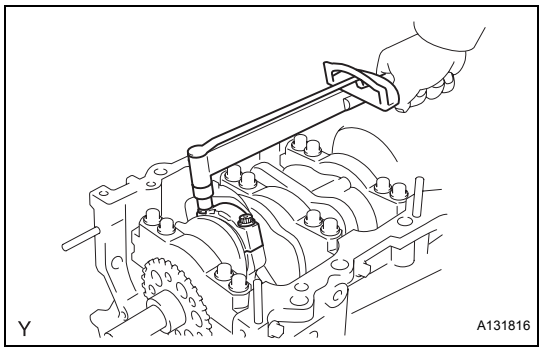

(h) Using SST, install the connecting rod cap (Procedure "H").
NOTICE:
Do not turn the crankshaft.
(i) Remove the 2 bolts and connecting rod cap (see procedure "B" and "C" above).

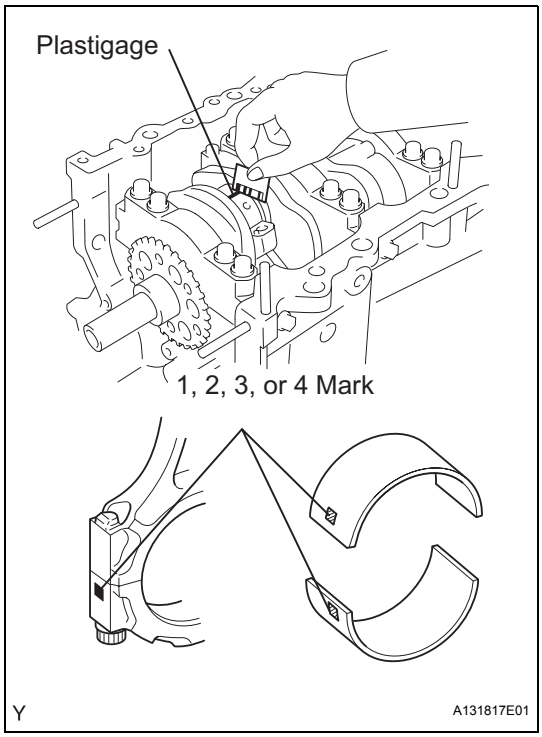

(j) Measure the Plastigage at its widest point.
Standard oil clearance:
0.045 to 0.067 mm (0.0018 to 0.0026 in.)
Maximum oil clearance:
0.070 mm (0.0028 in.)
If the oil clearance is greater than the maximum, replace the connecting rod bearings. If necessary, replace the crankshaft.
HINT:
If replacing a bearing, replace it with one that has the same number as its respective connecting rod cap. Each bearing's standard thickness is indicated by a 1, 2, 3 and 4 mark on its surface.
Reference:
Connecting rod diameter

Mark	Diameter
1	56.000 to 56.006 mm (2.2047 to 2.2050 in.)
2	56.007 to 56.012 mm (2.2050 to 2.2052 in.)
3	56.013 to 56.018 mm (2.2052 to 2.2054 in.)
4	56.019 to 56.024 mm (2.2055 to 2.2057 in.)

Standard bearing center wall thickness

Mark	Diameter
1	1.481 to 1.484 mm (0.0583 to 0.0584 in.)
2	1.484 to 1.487 mm (0.0584 to 0.0585 in.)
3	1.487 to 1.490 mm (0.0585 to 0.0587 in.)
4	1.490 to 1.493 mm (0.0587 to 0.0588 in.)

Crankshaft pin diameter:
52.992 to 53.000 mm (2.0863 to 2.0866 in.)

(k) Completely remove the Plastigage.

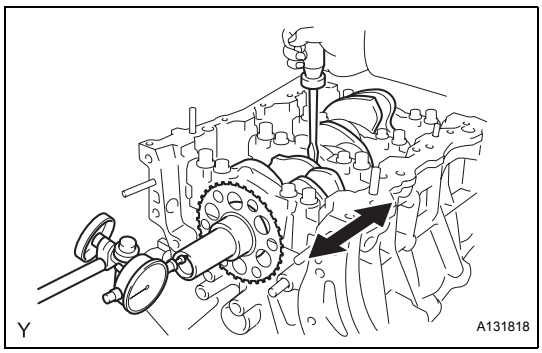

30. INSPECT CRANKSHAFT THRUST CLEARANCE

(a) Using a dial indicator, measure the thrust clearance while prying the crankshaft back and forth with a screwdriver.
Standard thrust clearance:
0.04 to 0.24 mm (0.0016 to 0.0094 in.)
Maximum thrust clearance:
0.30 mm (0.0118 in.)
If the thrust clearance is greater than the maximum, replace the thrust washers as a set. If necessary, replace the crankshaft.
Thrust washer thickness:
2.43 to 2.48 mm (0.0957 to 0.0976 in.)

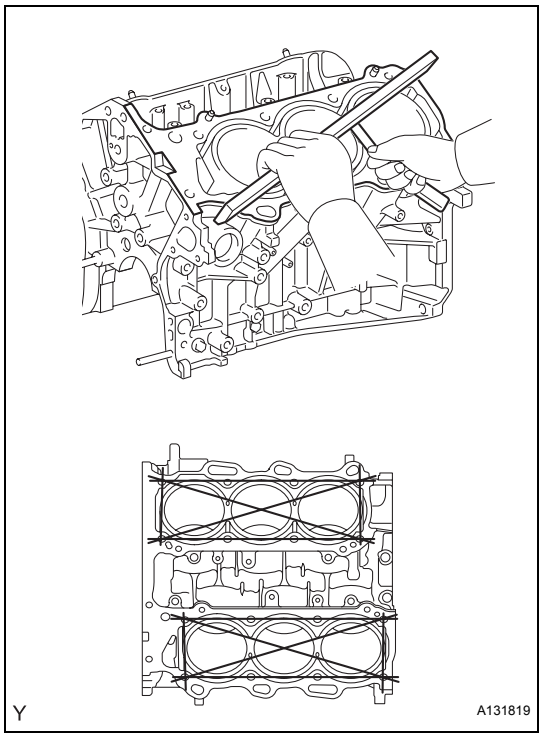

31. INSPECT CYLINDER BLOCK FOR WARPAGE

(a) Using a precision straight edge and feeler gauge, measure the warpage of the contact surface of the cylinder head gasket.

Maximum warpage:

0.07 mm (0.0028 in.)

If the warpage is greater than the maximum, replace the cylinder block.

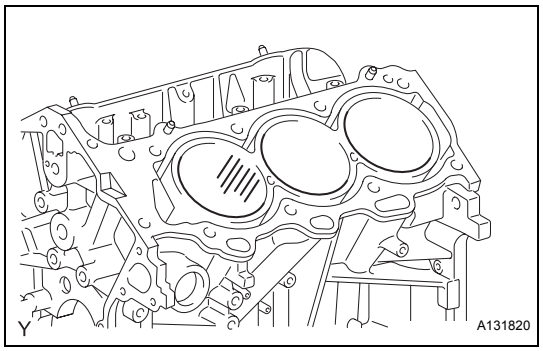

(b) Visually check the cylinder for vertical scratches. If deep scratches are present, rebore all the 6 cylinders. If necessary, replace the cylinder block.

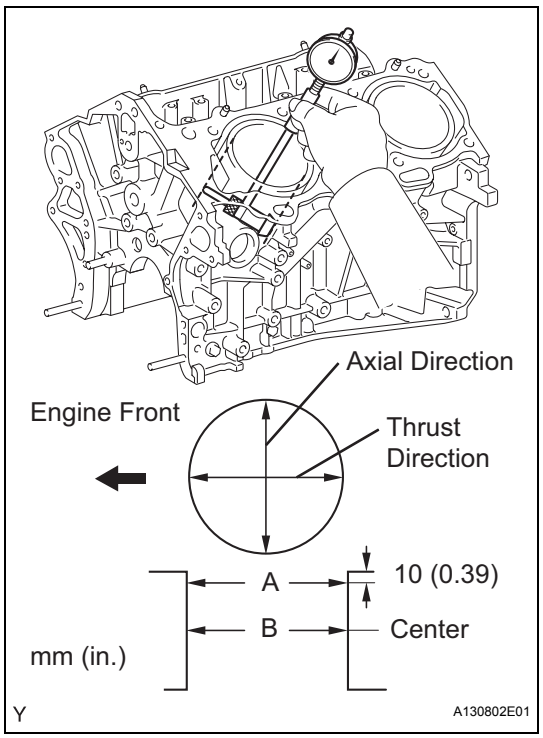

32. INSPECT CYLINDER BORE

(a) Using a cylinder gauge, measure the cylinder bore diameter at positions A and B in the thrust and axial directions.

Standard diameter:

94.000 to 94.012 mm (3.7008 to 3.7013 in.)

Maximum diameter:

94.200 mm (3.7087 in.)

If the diameter is greater than the maximum, replace the cylinder block.

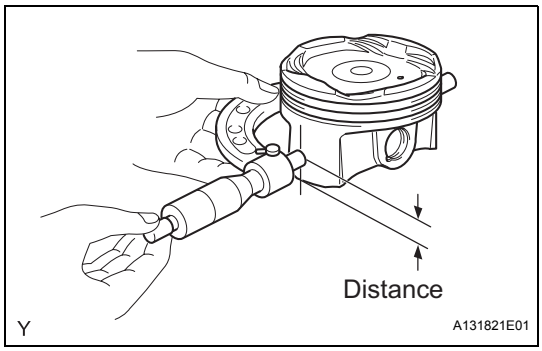

33. INSPECT PISTON SUB-ASSEMBLY WITH PIN

(a) Using a micrometer, measure the piston diameter at right angles to the piston center line where the distance from the piston end is as specified.

Distance:
9.8 mm (0.3858 in.)
Standard diameter:
93.960 to 93.980 mm (3.6992 to 3.7000 in.)
Maximum diameter:
93.830 mm (3.6941 in.)

34. INSPECT PISTON OIL CLEARANCE

(a) Measure the cylinder bore diameter in the thrust direction.

(b) Subtract the piston diameter measurement from the cylinder bore diameter measurement.

Standard oil clearance:
0.02 to 0.052 mm (0.0008 to 0.0020 in.)
Maximum oil clearance:
0.06 mm (0.0024 in.)

If the oil clearance is greater than the maximum, replace all the pistons. If necessary, replace the cylinder block.

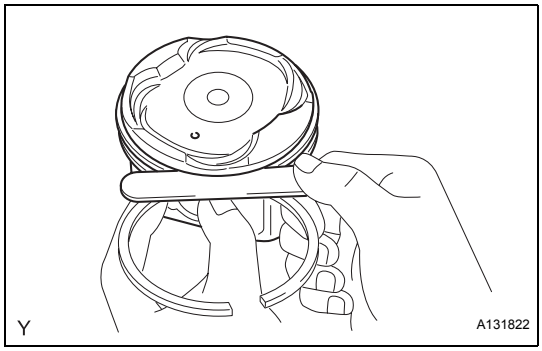

35. INSPECT RING GROOVE CLEARANCE

(a) Using a feeler gauge, measure the clearance between a new piston ring and the wall of the ring groove.

Ring groove clearance

Item	Clearance
No. 1	0.020 to 0.070 mm (0.0008 to 0.0028 in.)
No. 2	0.020 to 0.060 mm (0.0008 to 00024 in.)
Oil	0.070 to 0.150 mm (0.0028 to 0.0059 in.)

If the clearance is not as specified, replace the piston.

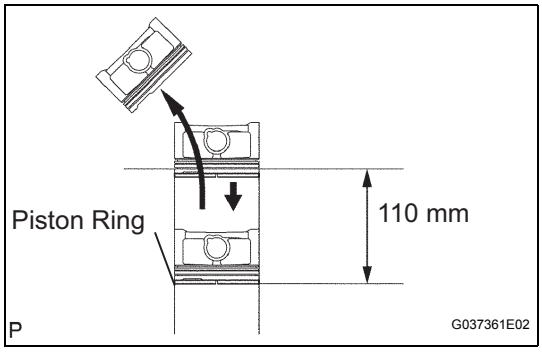

36. INSPECT PISTON RING END GAP

(a) Insert the piston ring into the cylinder bore.

(b) Using a piston, push the piston ring a little beyond the bottom of the ring travel, 110 mm (4.33 in,) from the top of the cylinder block.

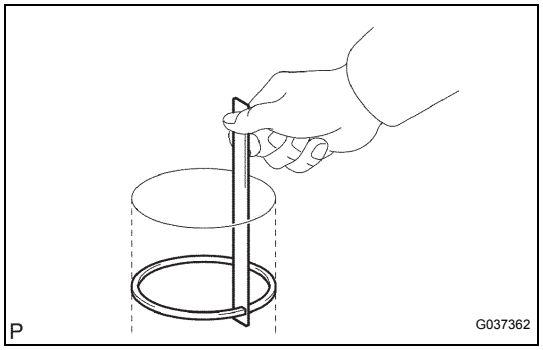

(c) Using a feeler gauge, measure the end gap.

Standard end gap

Item	End Gap
No. 1	0.25 to 0.35 mm (0.0098 to 0.0138 in.)
No. 2	0.50 to 0.60 mm (0.0197 to 0.0236 in.)
Oil	0.10 to 0.40 mm (0.0039 to 0.0157 in.)

Maximum end gap

Item	End Gap
No. 1	0.50 mm (0.0197 in.)
No. 2	0.85 mm (0.0335 in.)
Oil	0.60 mm (0.0236 in.)

If the end gap is greater than the maximum, replace the piston ring. If the end gap is greater than the maximum, even with a new piston ring, replace the cylinder block.

EM

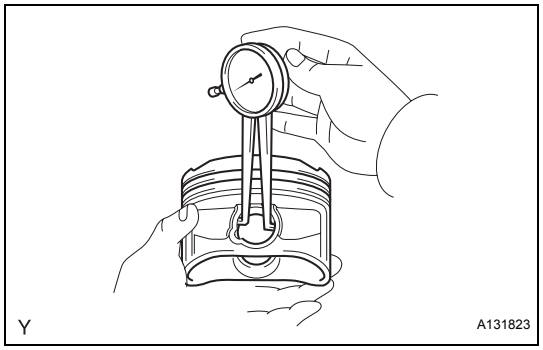

37. INSPECT PISTON PIN OIL CLEARANCE

(a) Using a caliper gauge, measure the inside diameter of the piston pin hole.

Piston pin hole inside diameter

Mark	Diameter
A	22.001 to 22.004 mm (0.8662 to 0.8663 in.)
B	22.004 to 22.007 mm (0.8663 to 0.8664 in.)
C	22.007 to 22.010 mm (0.8664 to 0.8665 in.)

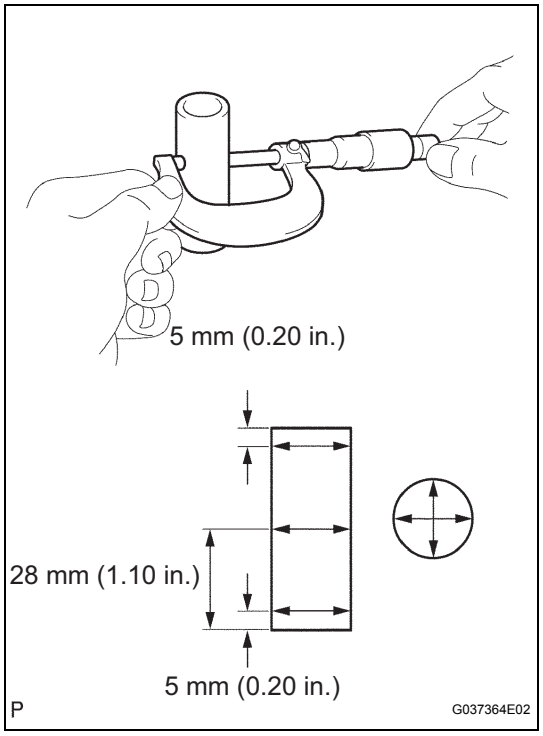

(b) Using a micrometer, measure the piston pin diameter.

Piston pin diameter

Mark	Diameter
A	21.997 to 22.000 mm (0.8660 to 0.8661 in.)
B	22.000 to 22.003 mm (0.8661 to 0.8663 in.)
C	22.003 to 22.006 mm (0.8663 to 0.8664 in.)

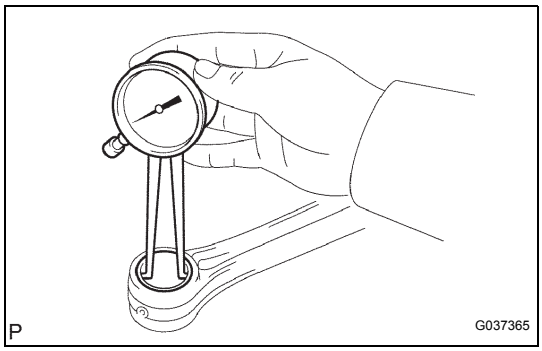

(c) Subtract the piston pin diameter measurement from the piston pin hole diameter measurement.
Standard oil clearance:
0.001 to 0.007 mm (0.00002 to 0.0003 in.)
Maximum oil clearance:
0.015 mm (0.0006 in.)
HINT:
If the oil clearance is greater than the maximum, replace the piston and piston pin as a set.

(d) Using a caliper gauge, measure the inside diameter of the connecting rod bushing.
Bushing inside diameter

Mark	Diameter
A	22.005 to 22.008 mm (0.8663 to 0.8665 in.)
B	22.009 to 22.011 mm (0.8665 to 0.8666 in.)
C	22.012 to 22.014 mm (0.8666 to 0.8667 in.)

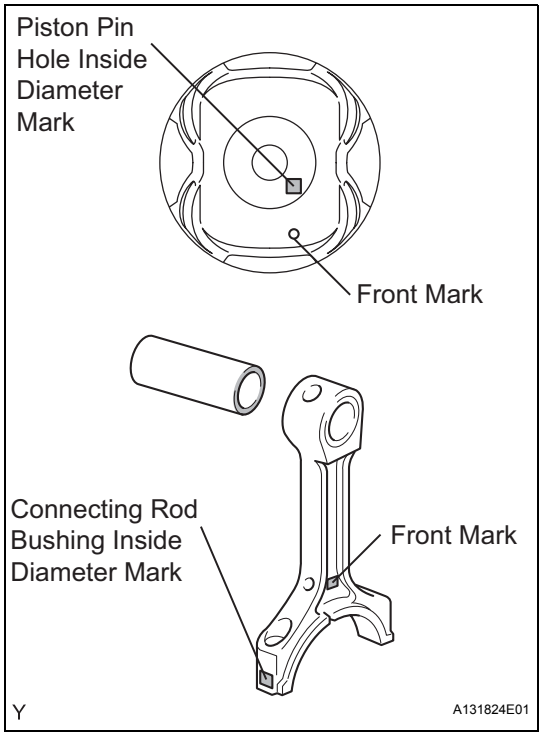

(e) Subtract the piston pin diameter measurement from the bushing inside diameter measurement.
Standard oil clearance:
0.005 to 0.011 mm (0.0002 to 0.0004 in.)
Maximum oil clearance:
0.03 mm (0.0012 in.)
HINT:
If the oil clearance is greater than the maximum, replace the bushing. If necessary, replace the connecting rod and piston pin as a set.

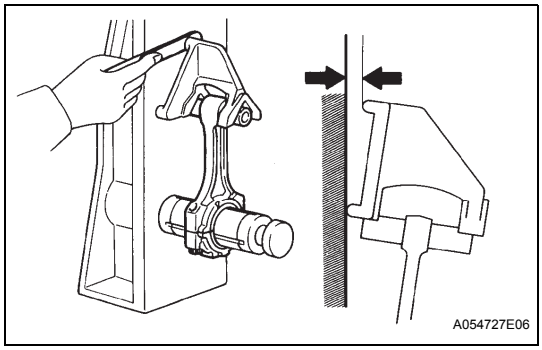

38. INSPECT CONNECTING ROD

(a) Using a rod aligner and feeler gauge, check the connecting rod alignment.
(1) Check for out-of-alignment.
Maximum out-of-alignment:
0.05 mm (0.0020 in.) per 100mm (3.94 in.)
If the out-of- alignment is greater than the maximum, replace the connecting rod assembly.

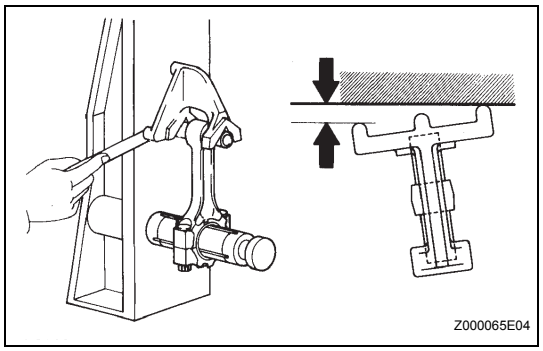

(2) Check for twist.
Maximum twist :
0.15 mm (0.0059 in.) per 100 mm (3.94 in.)
If the twist is greater than the maximum, replace the connecting rod assembly.

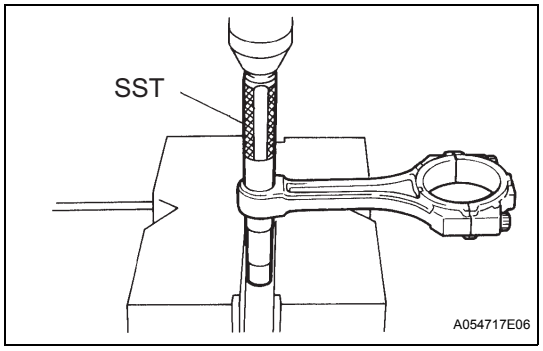

39. REMOVE CONNECTING ROD SMALL END BUSH
(a) Using SST and a press, press out the bush.
SST 09222-30010

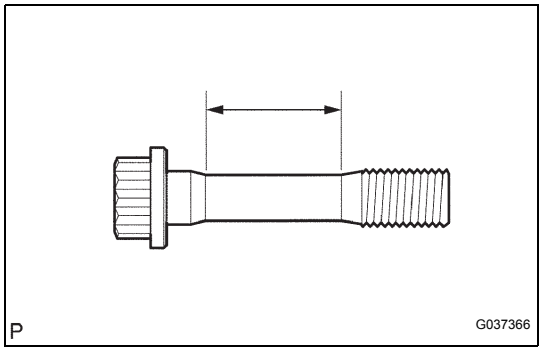

40. INSPECT CONNECTING ROD BOLT
(a) Using vernier calipers, measure the tension portion diameter of the bolt.
Standard diameter:
7.2 to 7.3 mm (0.283 to 0.287 in.)
Minimum diameter:
7.0 mm (0.276 in.)
If the diameter is less than the minimum, replace the bolt.

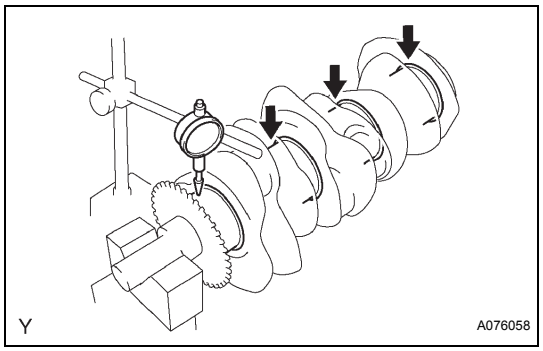

41. INSPECT CRANKSHAFT
(a) Inspect for circle runout.
(1) Place the crankshaft on the V-blocks.
(2) Using a dial indicator, measure the circle runout at the center journal.
Maximum circle runout:
0.06 mm (0.0024 in.)
If the circle runout is greater than the maximum, replace the crankshaft.

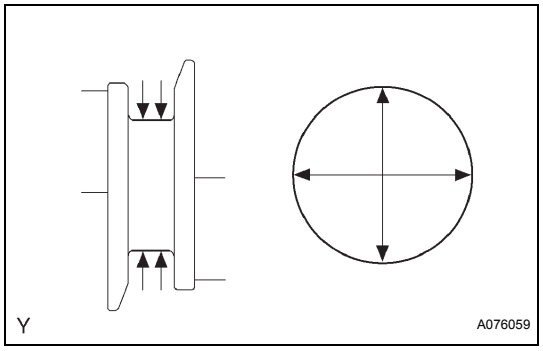

(b) Inspect the main journals.
(1) Using a micrometer, measure the diameter of each main journal.
Standard journal diameter:
60.988 to 61.00 mm (2.4011 to 2.4016 in.)
If the diameter is not as specified, check the oil clearance. If necessary, replace the crankshaft.
(2) Check each main journal for taper and out-of-round as shown in the illustration.
Maximum taper and out-of-round:
0.02 mm (0.0008 in.)

If the taper and out-of-round is greater than the maximum, replace the crankshaft.

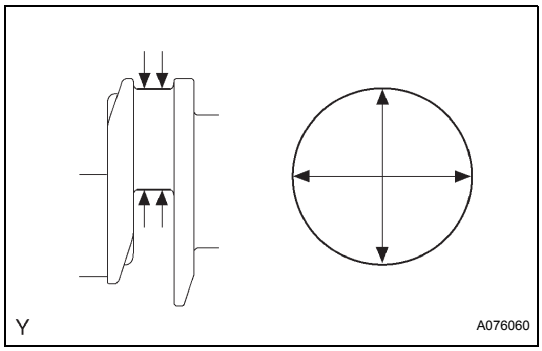

(c) Inspect the crank pin.
(1) Using a micrometer, measure the diameter of each crank pin.
Diameter:
52.992 to 53.000 mm (2.0863 to 2.0866 in.)
If the diameter is not as specified, check the oil clearance. If necessary, replace the crankshaft
(2) Check each crank pin for taper and out-of-round as shown in the illustration.
Maximum taper and out-of-round:
0.02 mm (0.0008 in.)
If the taper and out-of-round is greater than the maximum, replace the crankshaft.

EM

42. INSPECT CRANKSHAFT OIL CLEARANCE
NOTICE:
Main bearings come in widths of 18.0 mm (0.709 in.) and 21.0 mm (0.827 in.). Install the 21.0 mm (0.827 in.) bearings in the No. 1 and No. 4 cylinder block journal positions with the main bearing cap. Install the 18.0 mm (0.709 in.) bearings in the No. 2 and No. 3 positions.

(a) Clean the main journal and the both surfaces of the bearing.

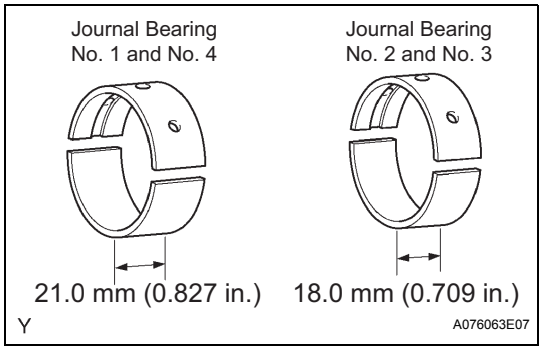

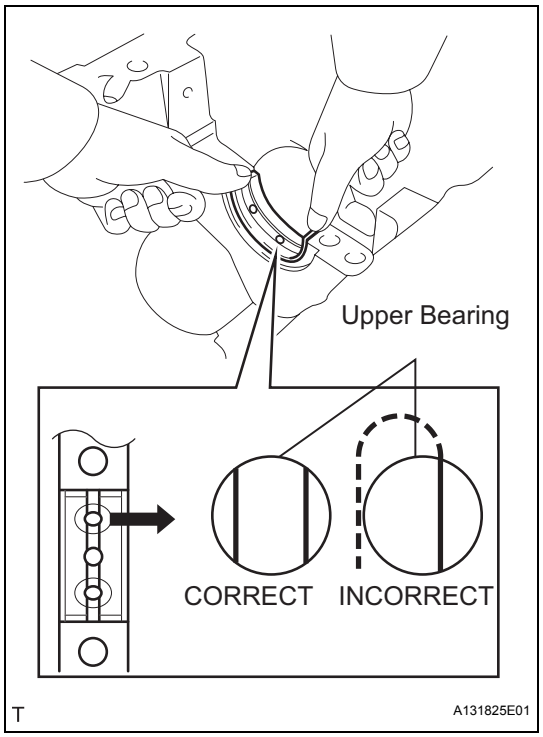

(b) Install the upper bearing.
  (1) Install the upper bearing to the cylinder block as shown in the illustration.
  NOTICE:
  Do not apply engine oil to the bearing and its contact surface.

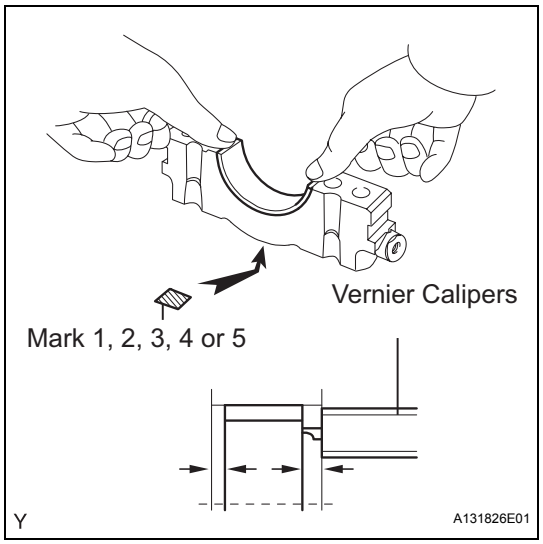

(c) Install the lower bearing.
  (1) Install the lower bearing to the bearing cap.
  (2) Using vernier calipers, measure the distance between the bearing cap's edge and the lower bearing's edge.
  Dimension (A - B):
  0.7 mm (0.0276 in.) or less
  NOTICE:
  Do not apply engine oil to the bearing's contact area and underside.

(d) Place the crankshaft on the cylinder block.

EM

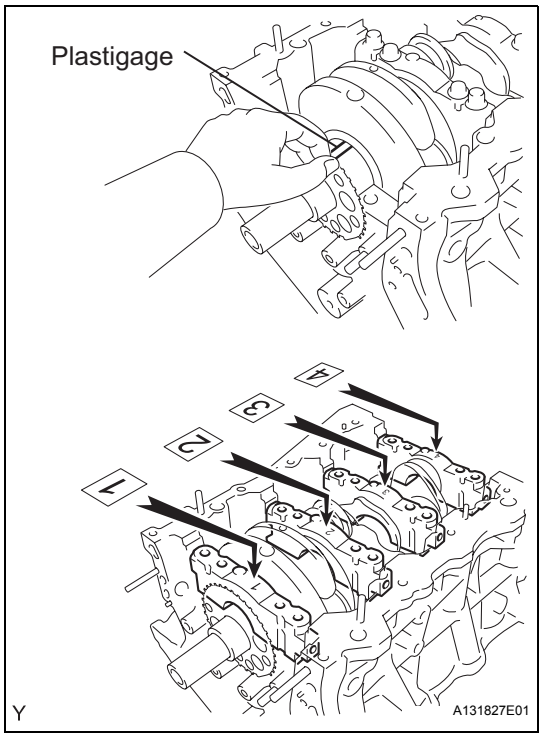

(e) Lay a strip of Plastigage across each journal.
(f) Examine the front marks and numbers and install the bearing caps on the cylinder block.
HINT:
A number is marked on each main bearing cap to indicate the installation position.
(g) Apply a light coat of engine oil on the threads and under the head of bearing cap bolts.
(h) Temporarily install the 8 main bearing cap bolts to the inside positions.

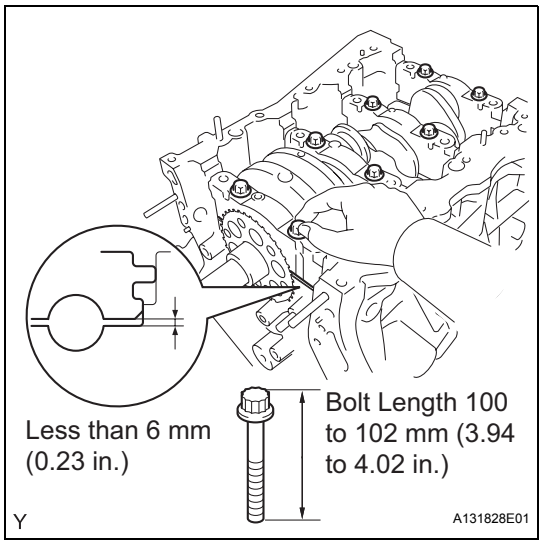

(i) Insert the main bearing cap with your hand until the clearance between the main bearing cap and the cylinder block is less than 6 mm (0.23 in.) by marking the 2 internal bearing cap bolts as a guide.
Bolt length:
100 to 102 mm (3.94 to 4.02 in.)

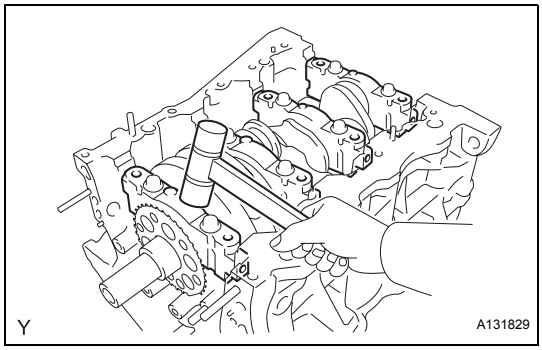

(j) Using a plastic hammer, lightly tap the bearing cap to ensure a proper fit.
(k) Apply a light coat of engine oil on the threads and under the head of the 8 main bearing cap bolts.

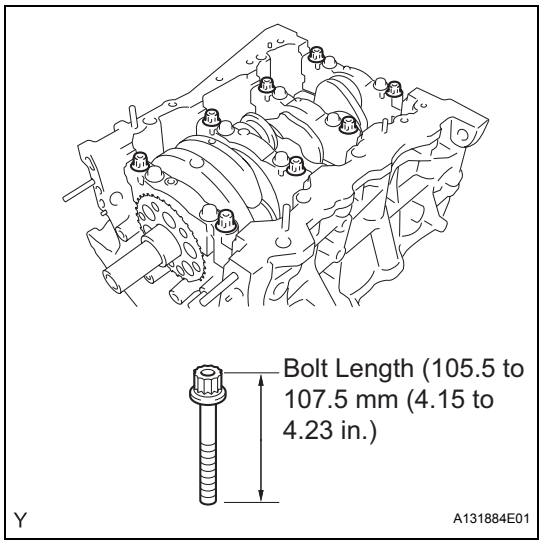

(l) Install the 8 main bearing cap bolts to the outside positions.
Bolt length:
105.5 to 107.5 mm (4.15 to 4.23 in.)

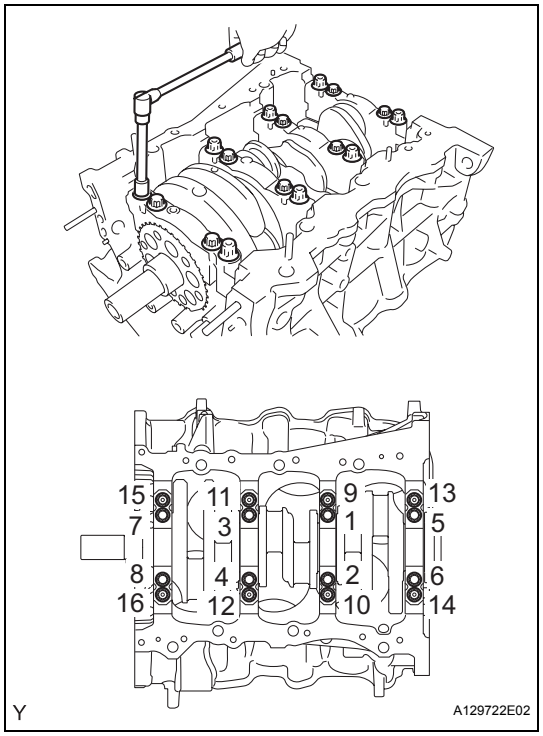

(m) Install and uniformly tighten the 16 main bearing cap bolts in several steps and in the sequence shown in the illustration.
Torque: 61 N*m (622 kgf*cm, 45 ft.*lbf)

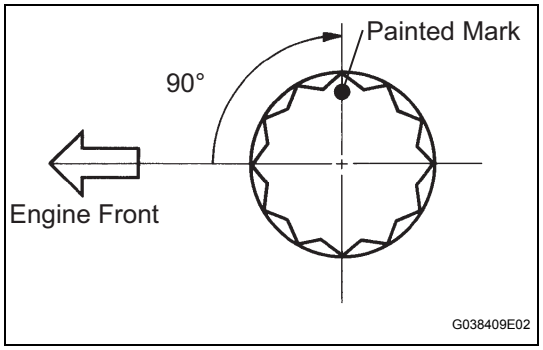

(n) Mark the front side of the bearing cap bolts with paint.
(o) Tighten the bearing cap bolts another 90° in the sequence shown.
(p) Check that the painted mark is now at a 90° angle to the front.
NOTICE:
Do not turn the crankshaft.

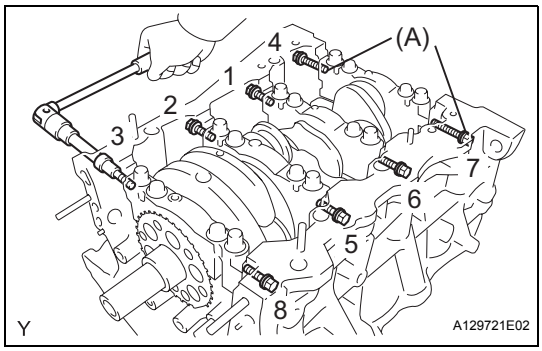

(q) Install and uniformly tighten the 8 main bearing cap bolts in several steps and in the sequence shown in the illustration.
Torque: 52 N*m (525 kgf*cm, 38 ft.*lbf)
HINT:
- Bolt (A) length: 45 mm (1.77 in.)
- Except bolt (A) length: 30 mm (1.18 in.)

(r) Remove the main bearing caps.

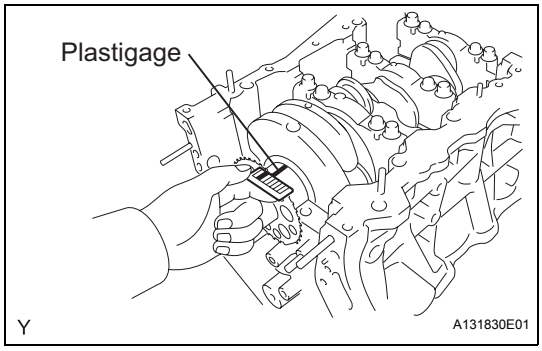

(s) Measure the Plastigage at its widest point.
Standard oil clearance:
0.026 to 0.047 mm (0.0010 to 0.0019 in.)
Maximum clearance:
0.050 mm (0.0020 in.)
If the oil clearance is greater than the maximum, replace the bearings. If necessary, replace the crankshaft.
NOTICE:
Completely remove the Plastigage.

EM

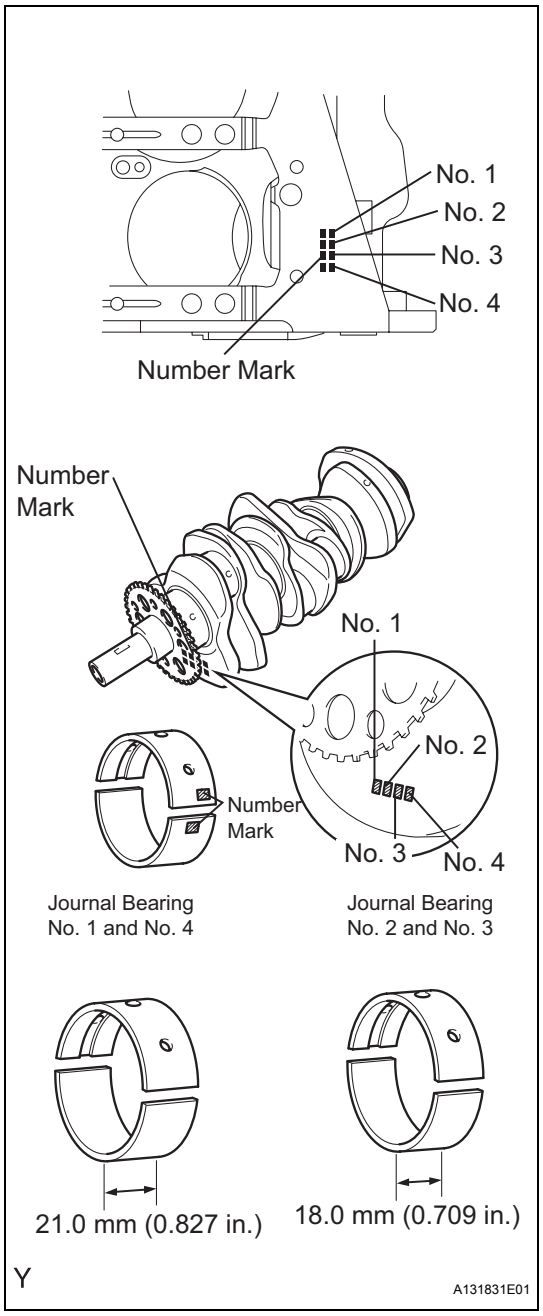

(t) If replacing a bearing, replace it with one having the same number. If the number of the bearing cannot be determined, select the correct bearing by adding together the numbers imprinted on the cylinder block and crankshaft, then refer to the table below for the appropriate bearing number. There are 5 sizes of standard bearings, marked "1", "2", "3", "4" and "5" accordingly.

Journal bearings:

Cylinder block (A) + Crankshaft	0 - 5	6 - 11	12 - 17	18 - 23	24 - 28
Use Bearing	"1"	"2"	"3"	"4"	"5"

HINT:
EXAMPLE: Cylinder block "11" + Crankshaft "06" = Total number 17 (Use bearing "3")

EM

Crankshaft main journal diameter

Mark	Diameter
"00"	60.999 to 61.000 mm (2.4015 to 2.4016 in.)
"01"	60.998 to 60.999 mm (2.4015 to 2.4015 in.)
"02"	60.997 to 60.998 mm (2.4015 to 2.4015 in.)
"03"	60.996 to 60.997 mm (2.4014 to 2.4015 in.)
"04"	60.995 to 60.996 mm (2.4014 to 2.4014 in.)
"05"	60.994 to 60.995 mm (2.4013 to 2.4014 in.)
"06"	60.93 to 60.994 mm (2.4013 to 2.4013 in.)
"07"	60.992 to 60.993 mm (2.4013 to 2.4013 in.)
"08"	60.991 to 60.992 mm (2.4012 to 2.4013 in.)
"09"	60.990 to 60.991 mm (2.4012 to 2.4012 in.)
"10"	60.989 to 60.990 mm (2.4011 to 2.4012 in.)
"11"	60.988 to 60.989 mm (2.4.11 to 2.4011 in.)

Standard upper bearing center wall thickness (No. 1 and No. 4 journal)

Mark	Diameter
"1"	2.500 to 2.503 mm (0.0984 to 0.0985 in.)
"2"	2.503 to 2.506 mm (0.0985 to 0.0987 in.)
"3"	2.506 to 2.509 mm (0.0987 to 0.0988 in.)
"4"	2.509 to 2.512 mm (0.0988 to 0.0989 in.)
"5"	2.512 to 2.515 mm (0.0989 to 0.0990 in.)

Standard lower bearing center wall thickness (No. 1 and No. 4 journal)

Mark	Diameter
"1"	2.478 to 2.481 mm (0.0976 to 0.0977 in.)
"2"	2.481 to 2.484 mm (0.0977 to 0.078 in.)
"3"	2.484 to 2.487 mm (0.0978 to 0.0979 in.)
"4"	2.487 to 2.490 mm (0.0979 to 0.0980 in.)
"5"	2.490 to 2.493 mm (0.0980 to 0.0981 in.)

EM

Standard upper bearing center thickness (No. 2 and No. 3 journal)

Mark	Diameter
"1"	2.478 to 2.481 mm (0.0976 to 0.0977 in.)
"2"	2.481 to 2.484 mm (0.0977 to 0.0978 in.)
"3"	2.484 to 2.487 mm (0.0978 to 0.0979 in.)
"4"	2.487to 2.490 mm (0.0979 to 0.0980 in.)
"5"	2.490 to 2.493 mm (0.0980 to 0.0981 in.)

Standard lower bearing center thickness (No. 2 and No. 3 journal)

Mark	Diameter
"1"	2.500 to 2.503 mm (0.0984 to 0.0985 in.)
"2"	2.503 to 2.506 mm (0.0985 to 0.0987in.)
"3"	2.506 to 2.509 mm (0.0987 to 0.0988 in.)
"4"	2.509 to 2.512 mm (0.0988 to 0.0989 in.)
"5"	2.512 to 2.515 mm (0.0989 to 0.0990 in.)

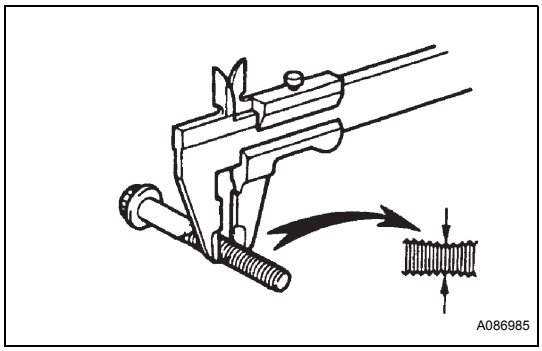

43. INSPECT CRANKSHAFT BEARING CAP SET BOLT

(a) Using vernier calipers, measure the minimum diameter of the compressed thread at the measuring point.

Standard diameter:
10.8 to 11.0 mm (0.4252 to 0.4331 in.)
Minimum diameter:
10.7 mm (0.4213 in.)

If the diameter is less than the minimum, replace the bolt.

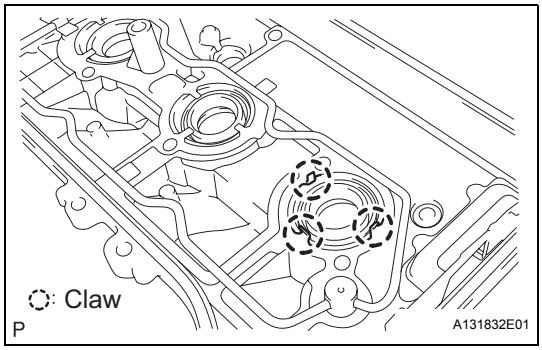

REPLACEMENT

1. REMOVE SPARK PLUG TUBE GASKET

(a) Pry up the claws of the ventilation baffle plate.

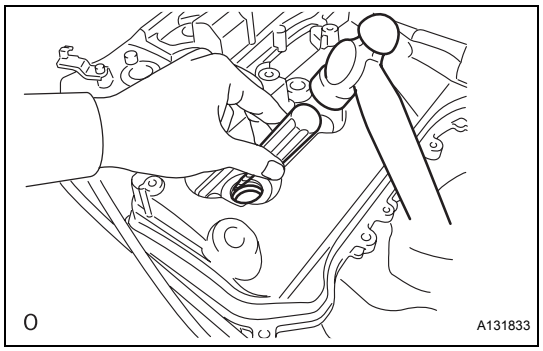

(b) Using a screwdriver with its tip taped and a hammer, tap out the 3 spark plug tube gaskets.

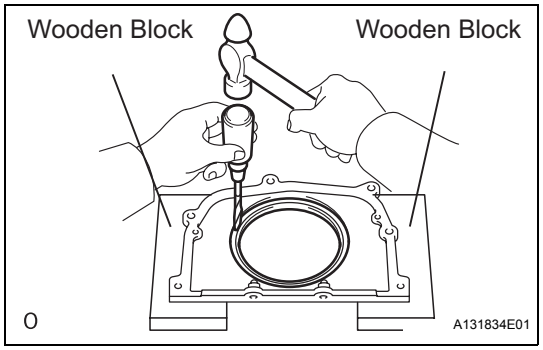

2. REMOVE ENGINE REAR OIL SEAL

(a) Place the oil seal retainer on wooden blocks.

(b) Using a screwdriver and a hammer, tap out the oil seal.
HINT:
Tap the screwdriver tip before use.

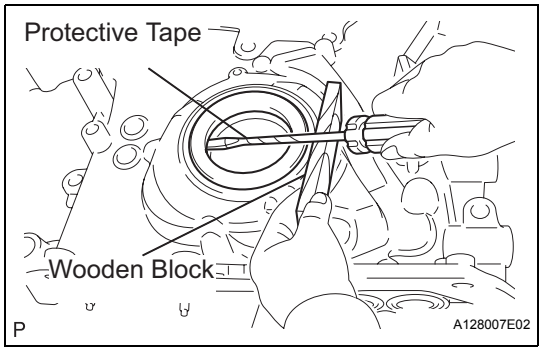

3. REMOVE TIMING CHAIN COVER OIL SEAL

(a) Using a screwdriver, pry out the oil seal.
HINT:
Tape the screwdriver tip before use.

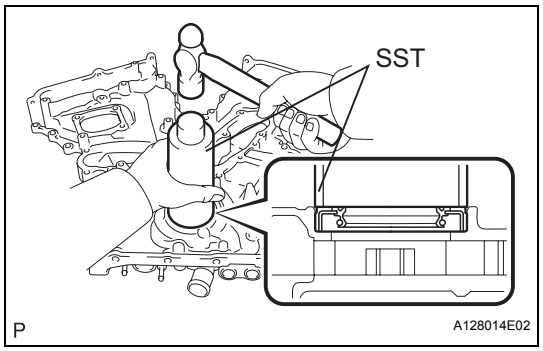

4. INSTALL TIMING CHAIN COVER OIL SEAL

(a) Using SST, tap in a new oil seal until its surface is flush with the timing gear case edge.
SST 09316-60011 (09316-00011)
NOTICE:
- **Keep the lip free from foreign matter.**
- **Do not tap on the oil seal at an angle.**
- **Make sure that the oil seal edge dose not stick out of the timing chain case.**

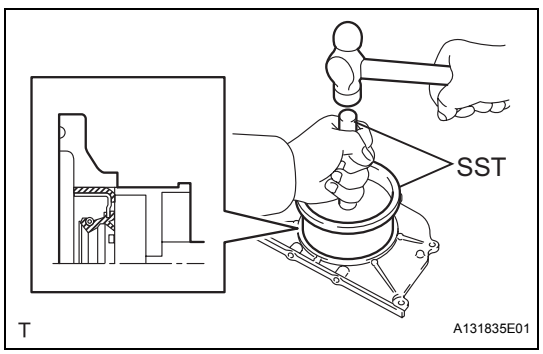

5. INSTALL ENGINE REAR OIL SEAL

(a) Place the oil seal retainer on wooden blocks.

(b) Using SST, tap in a new oil seal until its surface is flush with the oil seal retainer edge.
SST 09223-15030
NOTICE:
- **Keep the lip free from foreign matter.**
- **Do not tap on the oil seal at an angle.**

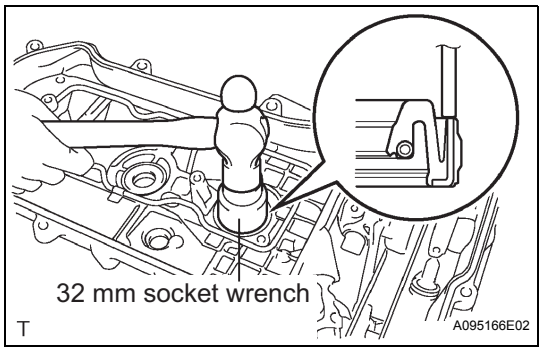

6. INSTALL SPARK PLUG TUBE GASKET

(a) Using a 32 mm socket wrench, tap in 6 new spark plug tube gaskets to the head covers.

NOTICE:

- **Keep the lip free from foreign matter.**
- **Do not tap on the oil seal at an angle.**

(b) Return the claw of the ventilation baffle plate to its original position.

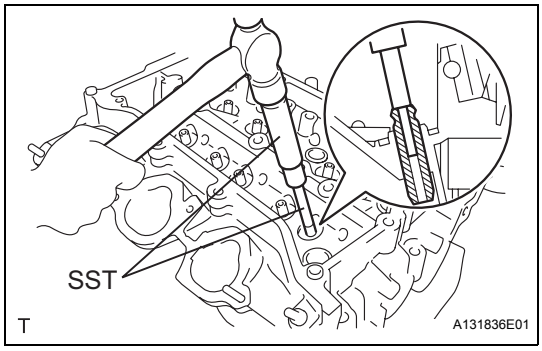

7. REMOVE INTAKE VALVE GUIDE BUSH

(a) Heat the cylinder head to 80 to 100°C (176 to 212°F).

(b) Place the cylinder head on wooden blocks.

(c) Using SST and a hammer, tap out the guide bush.

SST 09201-10000 (09201-01050), 09950-70010 (09951-07100)

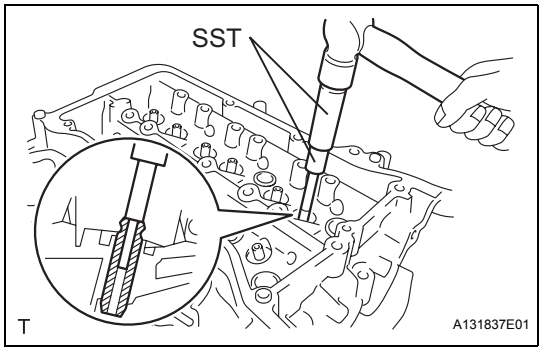

8. REMOVE EXHAUST VALVE GUIDE BUSH

(a) Heat the cylinder head to 80 to 100°C (176 to 212°F).

(b) Place the cylinder head on wooden blocks.

(c) Using SST and a hammer, tap out the guide bush.

SST 09201-10000 (09201-01050), 09950-70010 (09951-07100)

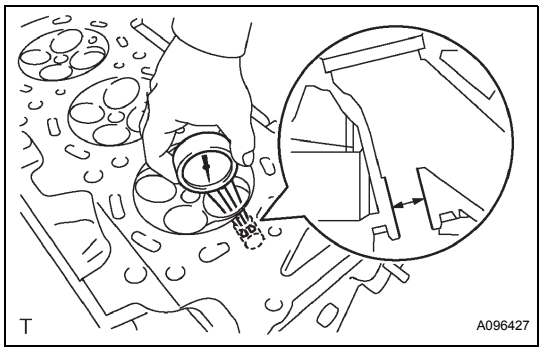

9. INSTALL INTAKE VALVE GUIDE BUSH

(a) Using a caliper gauge, measure the bush bore diameter of the cylinder head.

Cylinder bore diameter:
10.285 to 10.306 mm (0.4049 to 0.4057 in.)

(b) Select a new guide bush (STD or O/S 0.05).

Bush size	Bush bore diameter
Use STD	10.285 to 10.306 mm (0.4049 to 0.4057 in.)
Use O/S 0.05	10.335 to 10.356 mm (0.4069 to 0.4077 in.)

If the bush bore diameter of the cylinder head is greater than 10.306 mm (0.4057 in.), machine the bush bore to the dimension of 10.335 to 10.356 mm (0.4069 to 0.4077 in.) to install a O/S 0.05 valve guide bush.

If the bush bore diameter of the cylinder head is greater than 10.356 mm (0.4077 in.), replace the cylinder head.

(c) Heat the cylinder head to 80 to 100°C (176 to 212°F)

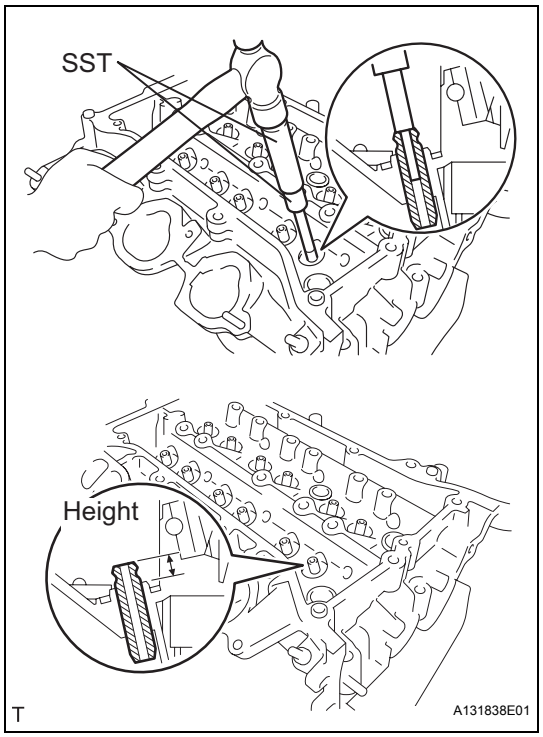

(d) Place the cylinder head on wooden blocks.

(e) Using SST, tap in a new valve guide bush to the specified protrusion height.

SST 09201-10000 (09201-01050), 09950-70010 (09951-07100)

Protrusion height:

9.30 to 9.70 mm (0.3661 to 0.3819 in.)

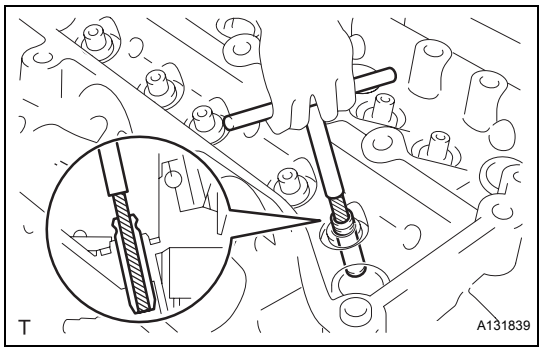

(f) Using a sharp 5.5 mm reamer, ream the valve guide bush to obtain the standard specified clearance.

Standard oil clearance:

0.025 to 0.060 mm (0.0010 to 0.0023 in.)

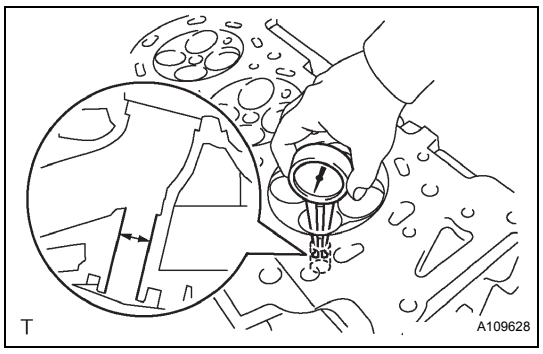

10. INSTALL EXHAUST VALVE GUIDE BUSH

(a) Using a caliper gauge, measure the bush bore diameter of the cylinder head.

Cylinder bore diameter:

10.285 to 10.306 mm (0.4049 to 0.4057in.)

(b) Select a new guide bush (STD or O/S 0.05).

Bush size	Bush bore diameter
Use STD	10.285 to 10.306 mm (0.4049 to 0.4057 in.)
Use O/S 0.05	10.335 to 10.356 mm (0.4069 to 0.4077 in.)

If the bush bore diameter of the cylinder head is greater than 10.306 mm (0.4057 in.), machine the bush bore to the dimension of 10.335 to 10.356 mm (0.4069 to 0.4077 in.) to install a O/S 0.05 valve guide bush.

If the bush bore diameter of the cylinder head is greater than 10.356 mm (0.4077 in.), replace the cylinder head.

(c) Heat the cylinder head to 80 to 100°C (176 to 212°F).

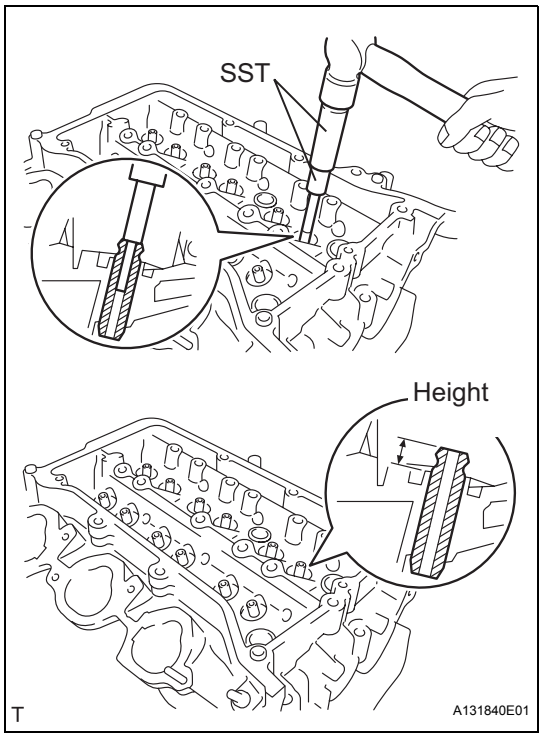

(d) Place the cylinder head on wooden blocks.
(e) Using SST, tap in a new valve guide bush to the specified protrusion height.
SST 09201-10000 (09201-01050), 09950-70010 (09951-07100)
Protrusion height:
9.30 to 9.70 mm (0.3661 to 0.3819 in.)

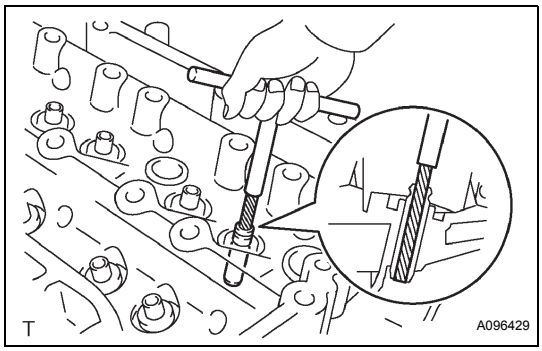

(f) Using a sharp 5.5 mm reamer, ream the valve guide bushing to obtain the standard specified clearance.
Standard oil clearance:
0.030 to 0.065 mm (0.0012 to 0.0026 in.)

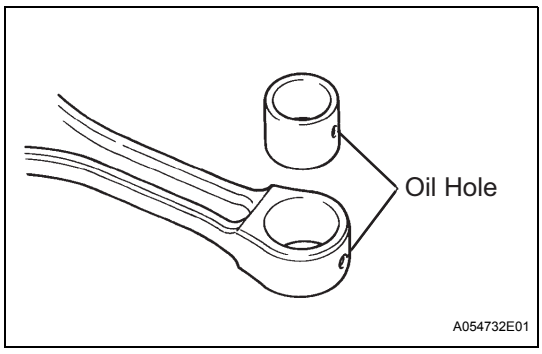

11. INSTALL CONNECTING ROD SMALL END BUSH
(a) Align the oil holes of a new bush and the connecting rod.

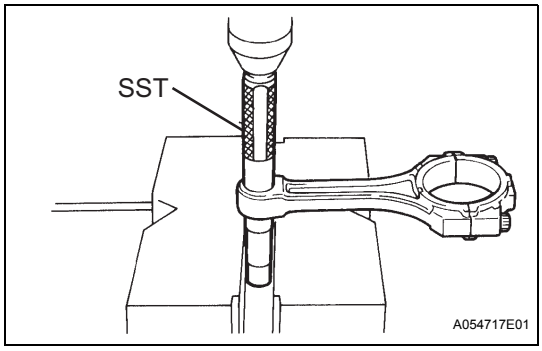

(b) Using SST and a press, press in the bush.
SST 09222-30010

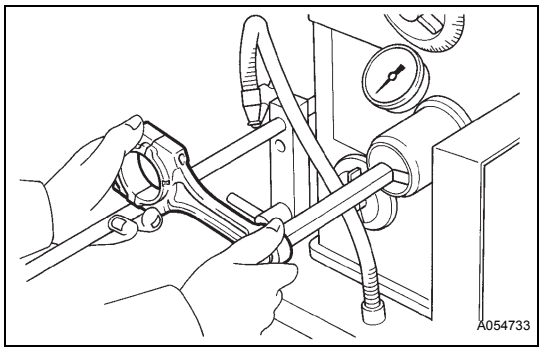

(c) Using a pin hole grinder, hone the bush to obtain the standard specified clearance between the bush and piston pin.

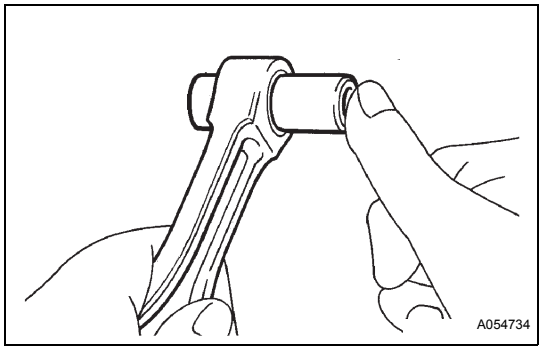

(d) Check that the piston pin fits at normal room temperature.
   (1) Coat the piston pin with engine oil, and push it into the connecting rod with your thumb.

REASSEMBLY

1. INSTALL TIGHT PLUG

NOTICE:

If water leaks from the tight plug or the plug corrodes, replace it.

(a) Apply adhesive around the tight plugs.

Adhesive::

Part No. 08833-00070, THREE BOND 1324 or equivalent.

(b) Using SST, tap in the tight plugs.

SST 09950-60010 (09951-00340), 09950-70010 (09951-07100)

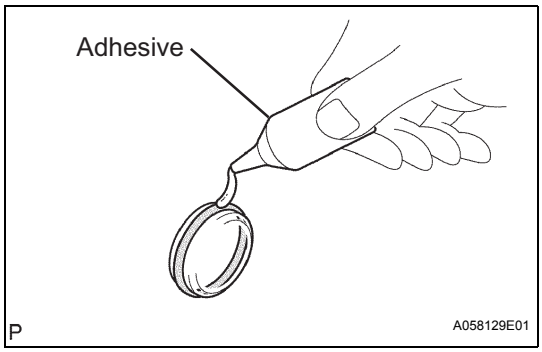

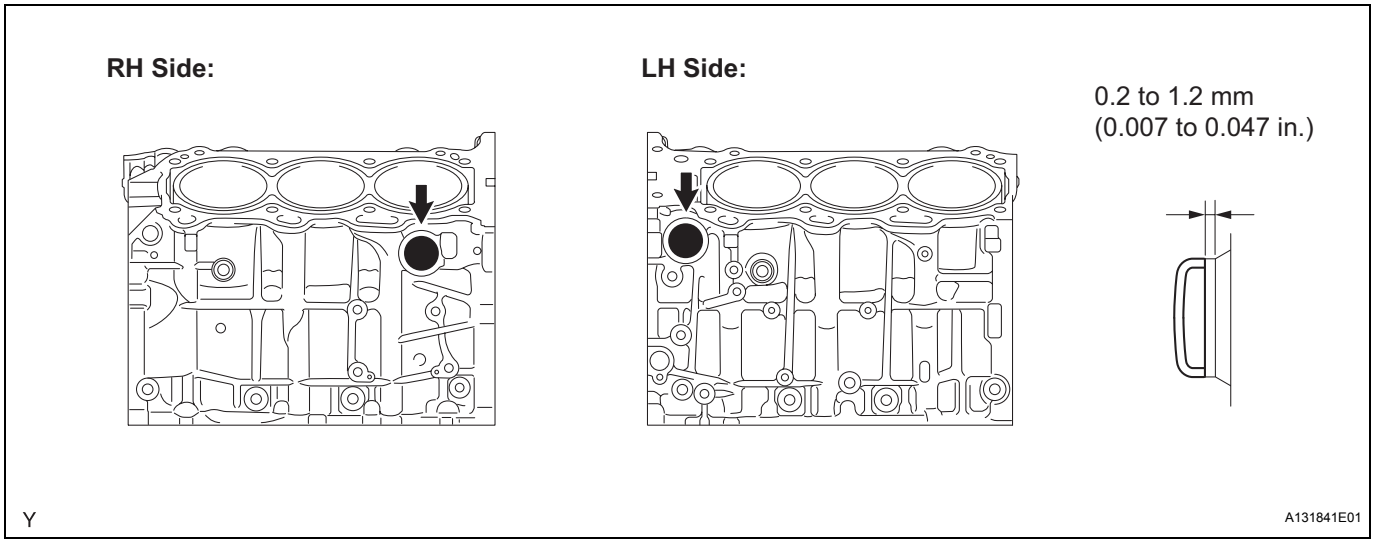

2. INSTALL STRAIGHT PIN

(a) Using a plastic hammer, tap in new straight pins to the cylinder block.

Standard protrusion

Item	protrusion
Pin A	23 mm (0.906 in.)
Pin B	6 mm (0.236 in.)
Pin C	11 mm (0.433 in.)
Pin D	9 mm (0.354 in.)

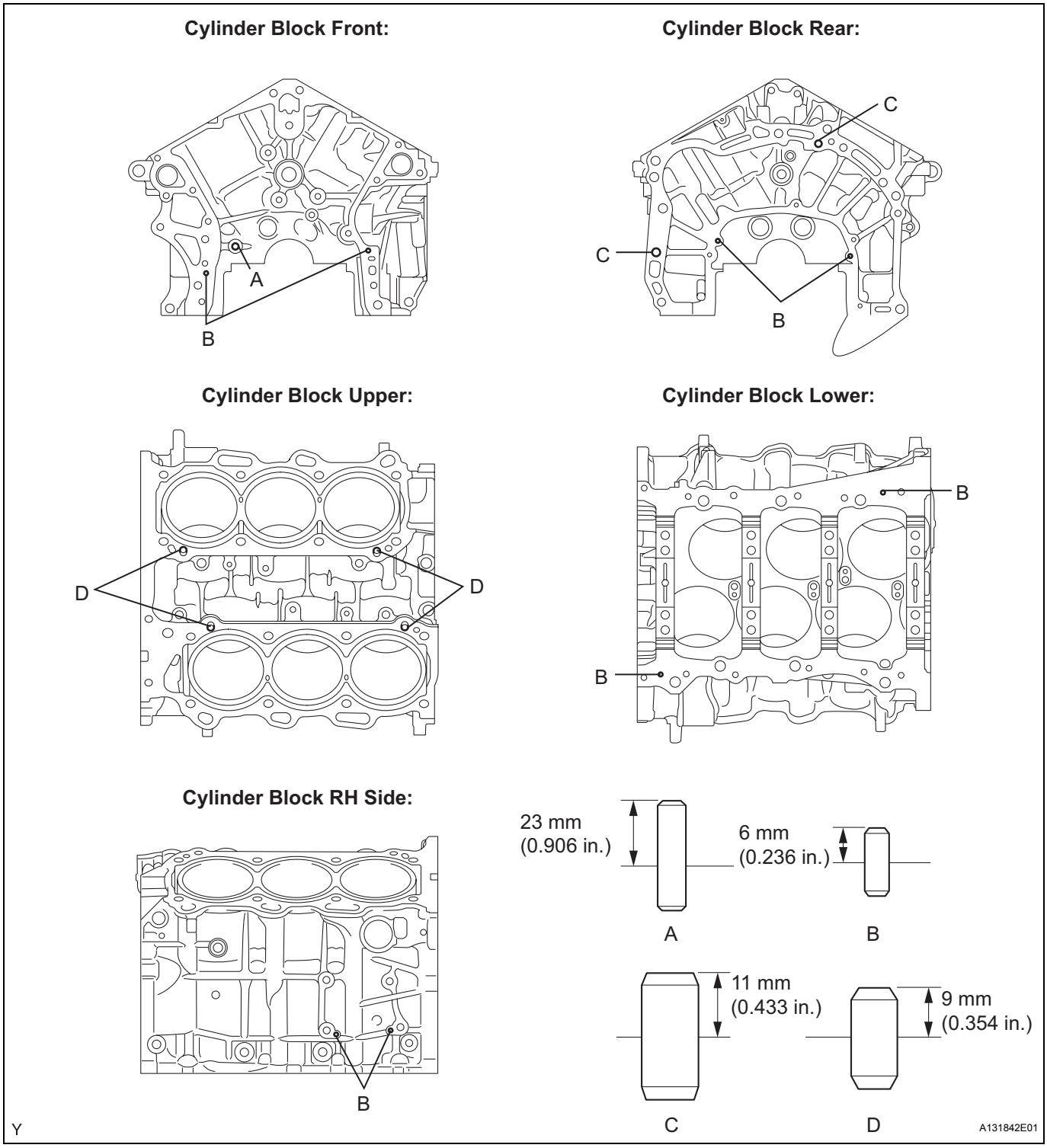

EM

3. **INSTALL STUD BOLT**

(a) Using an E8 "torx" socket wrench, install the stud bolt.

Torque: 10 N*m (102 kgf*cm, 7 ft.*lbf)

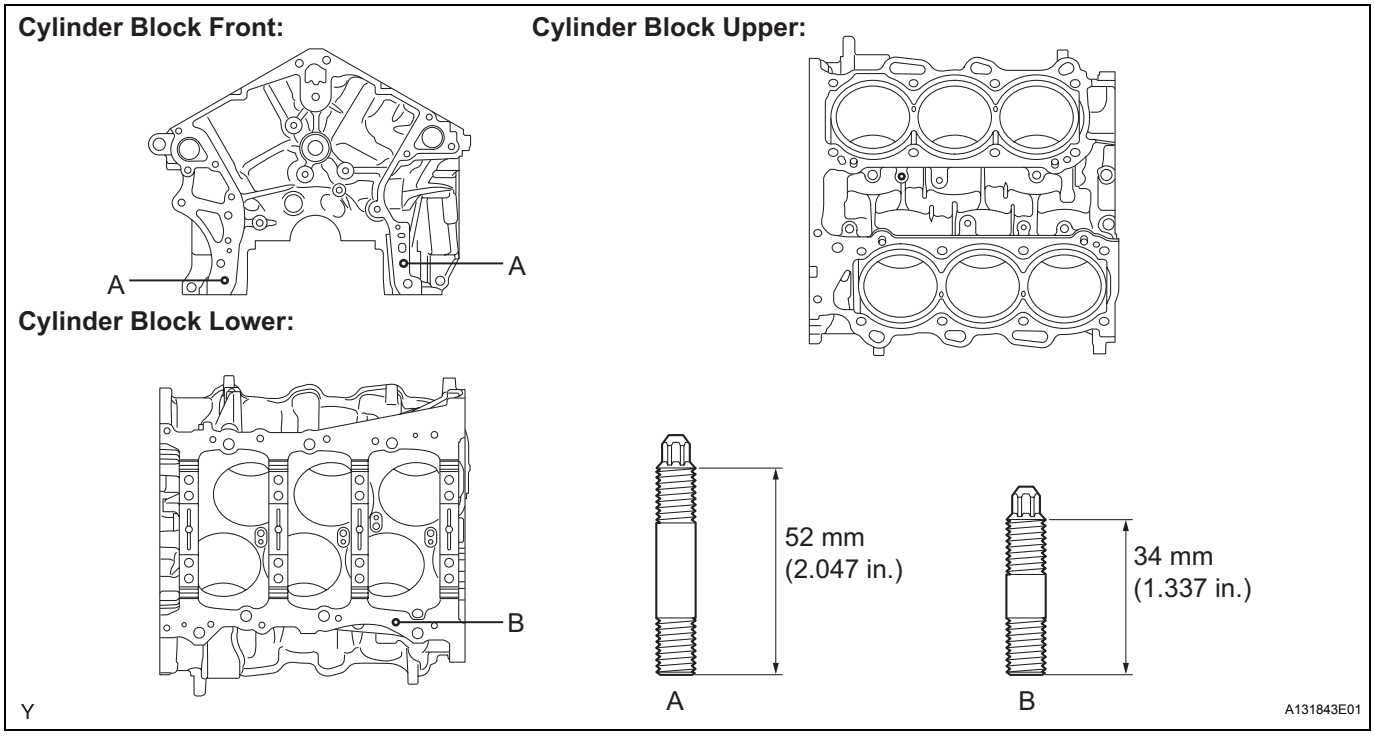

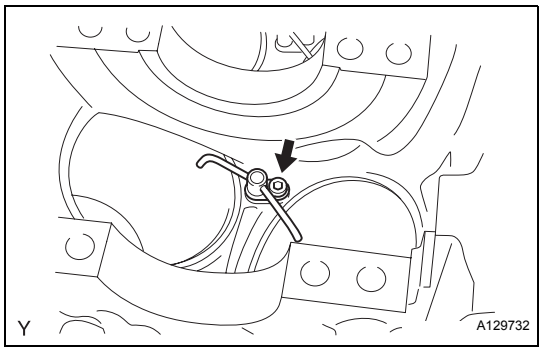

4. INSTALL SUB-ASSEMBLY OIL NOZZLE NO.1

(a) Using a 5 mm hexagon wrench, install the 3 oil nozzles with the bolts.
Torque: 9.0 N*m (92 kgf*cm, 80 in.*lbf)

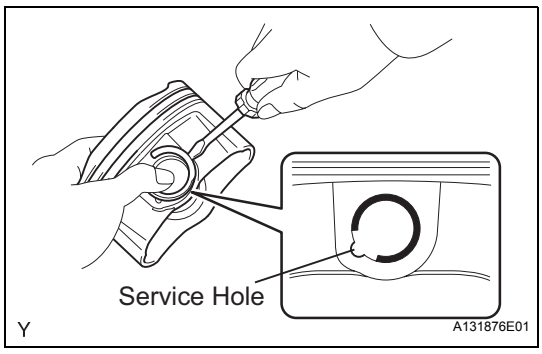

5. INSTALL PISTON SUB-ASSEMBLY WITH PIN

(a) Using a screwdriver, install a new snap ring at one end of the piston pin hole.
HINT:
Be sure that end gap of the snap ring is not aligned with the pin hole cutout portion of the piston.

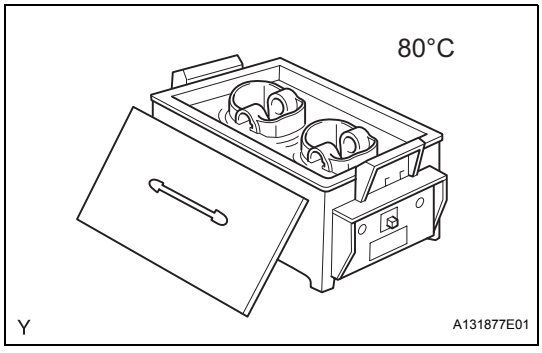

(b) Gradually heat the piston to approximately 80°C (176°F).

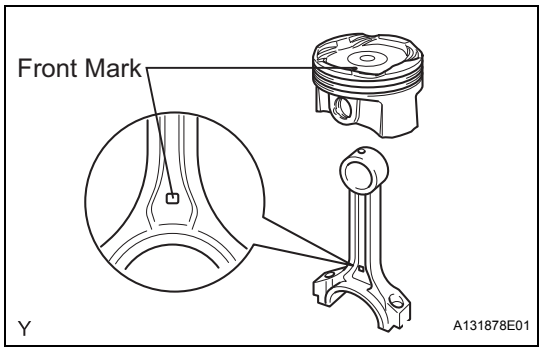

(c) Coat the piston pin with engine oil.
(d) Align the front marks of the piston and connecting rod, and push in the piston pin with your thumb.
HINT:
The piston and pin are a matched set.

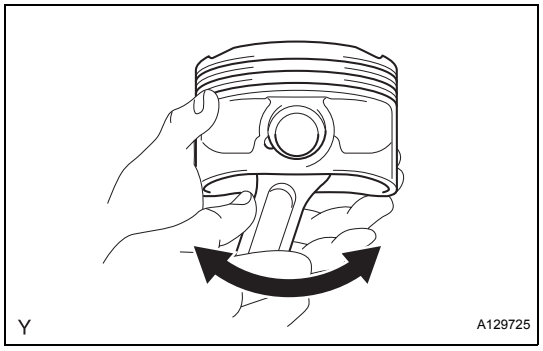

(e) Check the fitting condition between the piston and piston pin by trying to move the piston back and forth on the piston pin.

EM

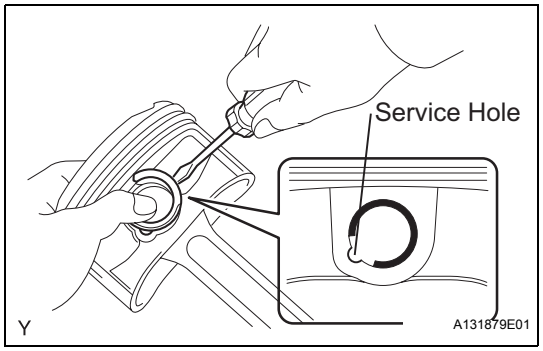

(f) Using a screwdriver, install a new snap ring at the other end of the piston pin hole.
HINT:
Be sure that the end gap of the snap ring is not aligned with the pin hole cutout portion of the piston.

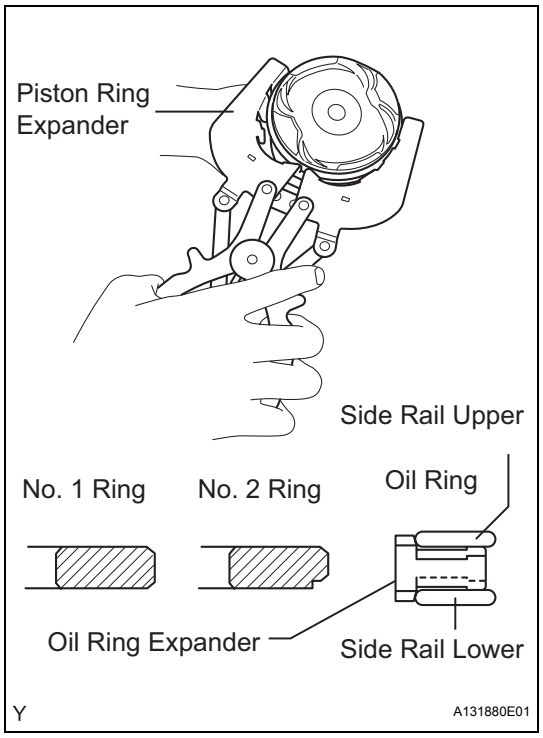

6. INSTALL PISTON RING SET

(a) Install the oil ring expander and 2 side rails by hand.
(b) Using a piston ring expander, install the 2 compression rings so that the painted marks are positioned as shown in the illustration.

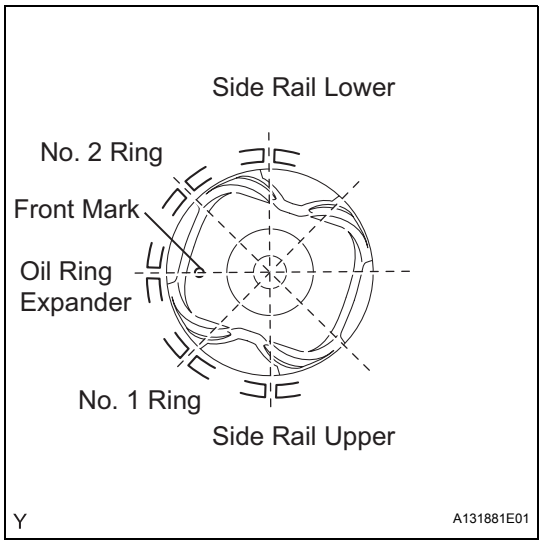

(c) Position the piston rings so that the ring ends are as shown in the illustration.
NOTICE:
Do not align the ring ends.

7. INSTALL CRANKSHAFT BEARING
NOTICE:
Main bearings come in widths between 18.0 mm (0.709 in.) and 21.0 mm (0.827 in.). Install the 21.0 mm (0.827 in.) bearings in the No. 1 and No. 4 cylinder block journal positions with the main bearing cap. Install the 18.0 mm (0.709 in.) bearings in the No. 2 and No. 3 positions.

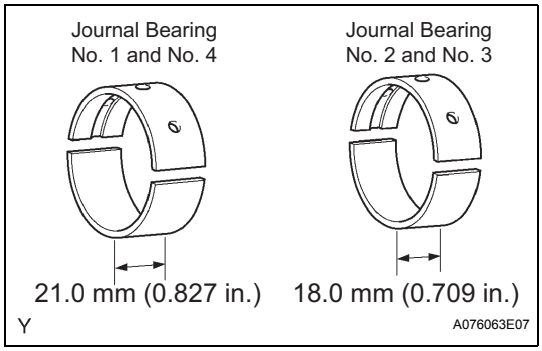

(a) Clean the main journal and the both surfaces of the bearing.

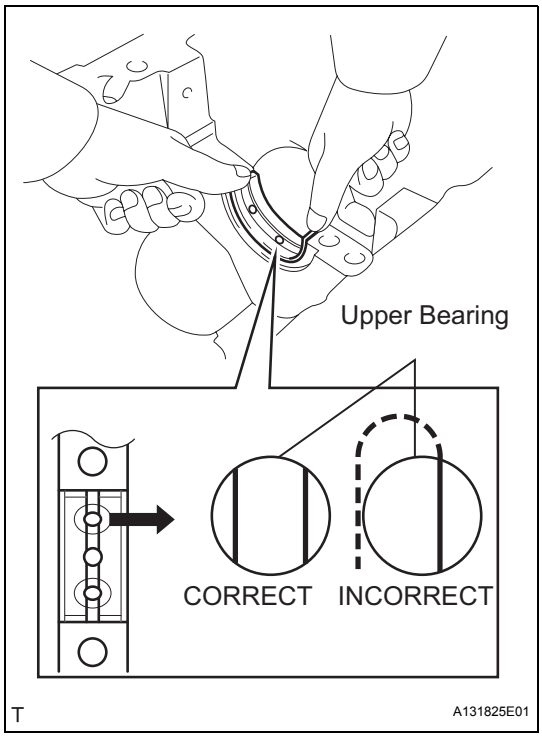

(b) Install the upper bearing.
(1) Install the upper bearing to the cylinder block as shown in the illustration.
NOTICE:
Do not apply engine oil to the bearing and its contact surface.

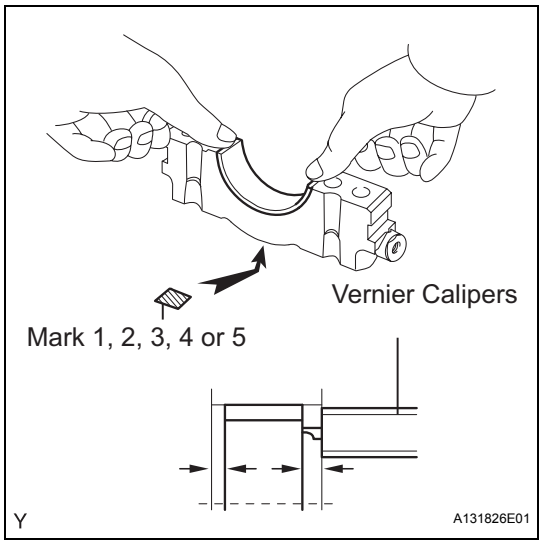

(c) Install the lower bearing.
(1) Install the lower bearing to the bearing cap.
(2) Using vernier calipers, measure the distance between the bearing cap's edge and the lower bearing's edge.
Dimension (A - B):
0.7 mm (0.0276 in.) or less.
NOTICE:
Do not apply engine oil to the bearing's contact area and underside.

EM

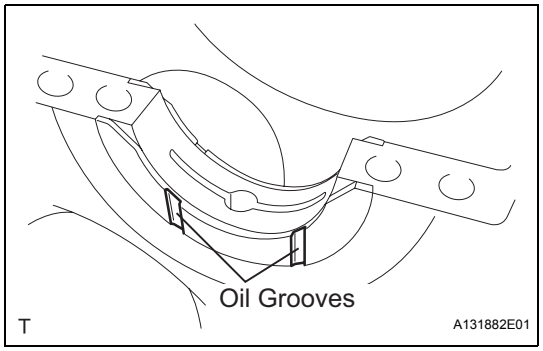

8. INSTALL CRANKSHAFT

(a) Install the crankshaft thrust washer to the cylinder block.
(1) Install the 2 thrust washers under the No. 2 journal position of the cylinder block with the oil grooves facing outward.

(b) Apply engine oil to the upper bearing, then place the crankshaft on the cylinder block.

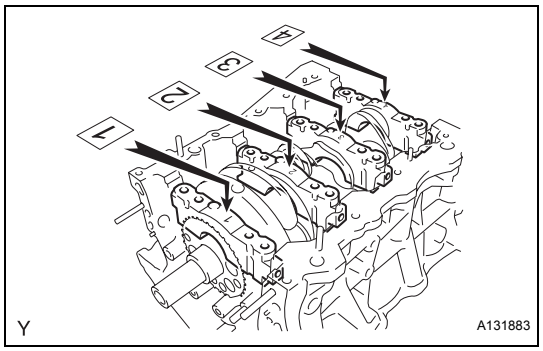

(c) Confirm the front marks and numbers of the main bearing caps and install the bearing caps on the cylinder block.
HINT:
A number is marked on each main bearing cap to indicate the installation position.

(d) Apply a light coat of engine oil on the threads and under the head of bearing cap bolts.

(e) Temporarily install the 8 main bearing cap bolts to the inside positions.

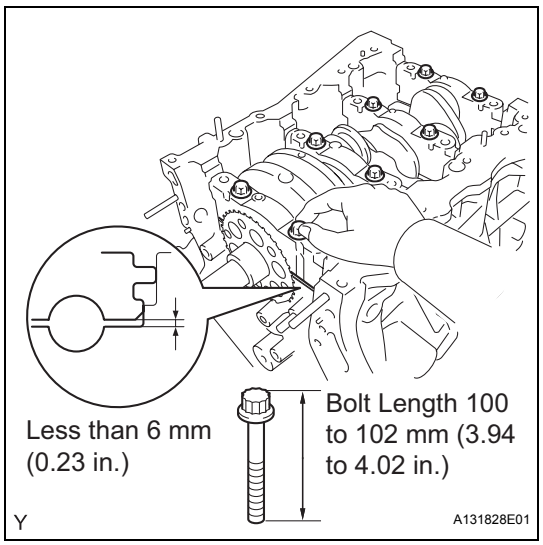

(f) Insert the main bearing cap by hand until the clearance between the main bearing cap and the cylinder block is less than 6 mm (0.23 in.) by marking the 2 internal bearing cap bolts as a guide.
Bolt length:
100 to 102 mm (3.94 to 4.02 in.)

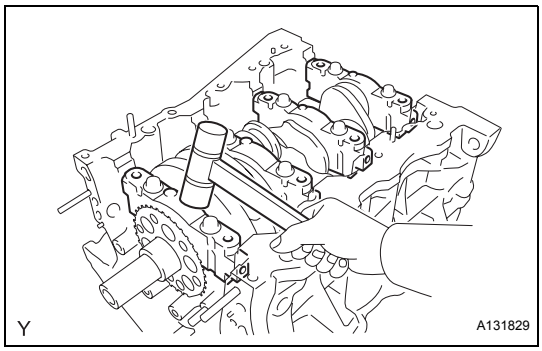

(g) Using a plastic hammer, lightly tap the bearing cap to ensure a proper fit.
(h) Apply a light coat of engine oil to the threads and under the heads of 8 main bearing cap bolts.

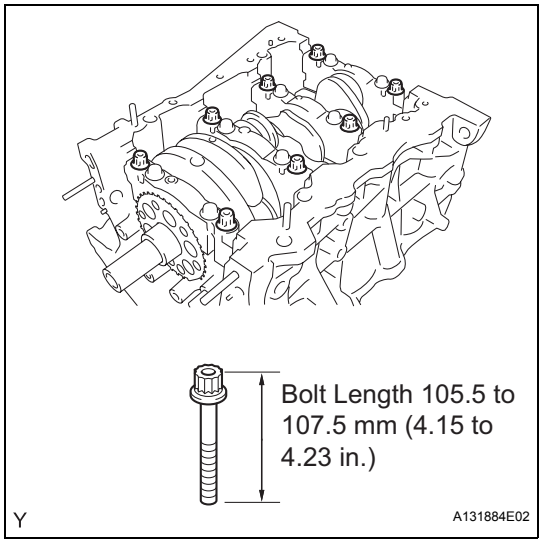

(i) Install the 8 main bearing cap bolts to the outside positions.
Bolt length:
105.5 to 107.5 mm (4.15 to 4.23 in.)

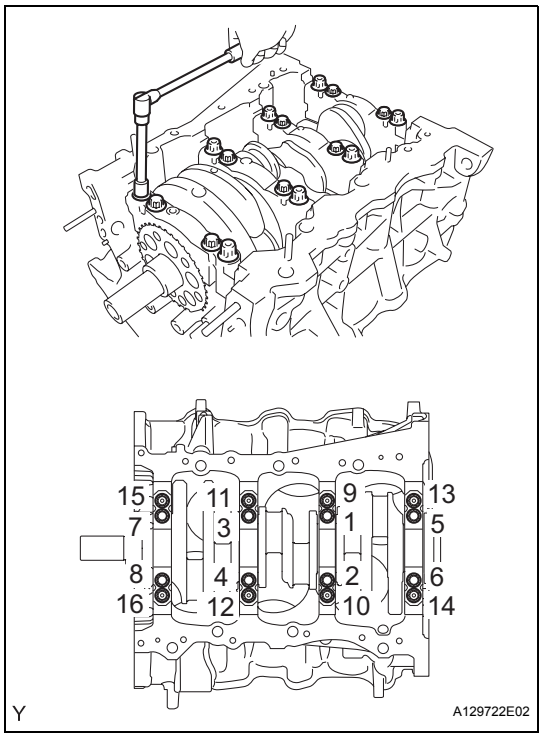

(j) Install the crankshaft bearing cap bolts.
HINT:
The main bearing cap bolts are tightened in 2 progressive steps.
(k) Step 1
(1) Install and uniformly tighten the 16 main bearing cap bolts in the sequence shown in the illustration.
Torque: 61 N*m (622 kgf*cm, 45 ft.*lbf)
If any of the main bearing cap bolts does not meet the torque specified, replace it.

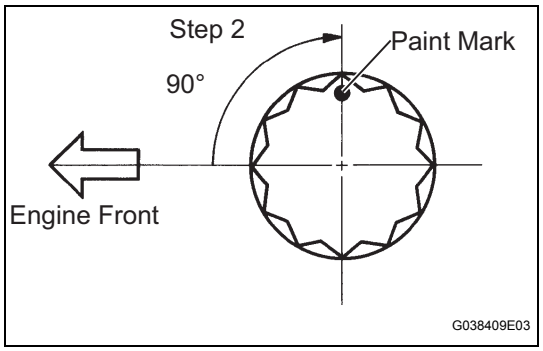

(l) Step 2
  (1) Mark the front of the bearing cap bolts with paint.
  (2) Tighten the bearing cap bolts another 90° in the order above.
  (3) Check that the painted mark is now at a 90° angle to the front.
(m) Check that the crankshaft turns smoothly.
(n) Check the crankshaft thrust clearance.

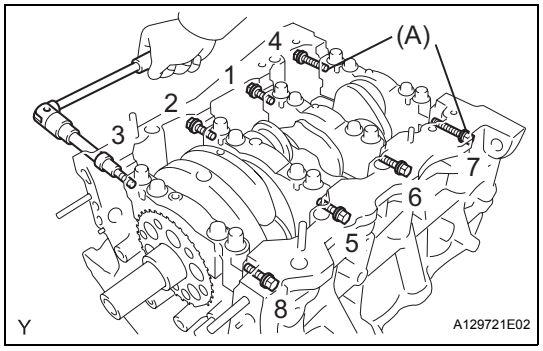

(o) Install and uniformly tighten the 8 main bearing cap bolts in several steps and in the sequence shown in the illustration.
Torque: 52 N*m (525 kgf*cm, 38 ft.*lbf)
HINT:
- Bolt (A) length: 45 mm (1.77 in.)
- Except bolt (A) length: 30 mm (1.18 in.)

(p) Check that the crankshaft turns smoothly.
(q) Check the crankshaft thrust clearance.

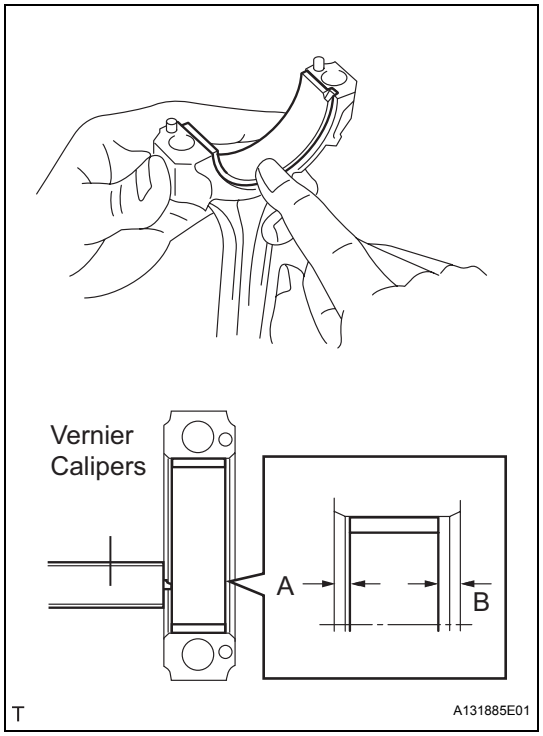

9. INSTALL CONNECTING ROD BEARING

(a) Install the connecting rod bearing to the connecting rod and bearing cap.
(b) Using vernier calipers, measure the distance between the connecting rod's and bearing cap's edges, and each connecting rod bearing's edge.
Dimension (A - B):
0.7 mm (0.0276 in.) or less
NOTICE:
Do not apply engine oil to the bearing's contact area and underside.

10. INSTALL PISTON SUB-ASSEMBLY WITH CONNECTING ROD

(a) Apply engine oil to the cylinder walls, the pistons, and the surfaces of the connecting rod bearings.

EM

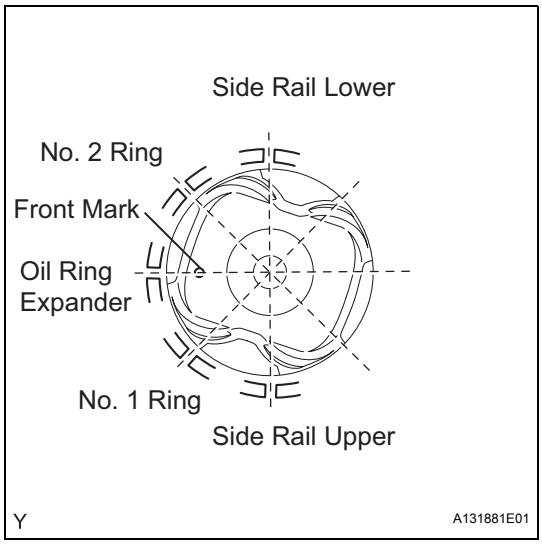

(b) Position the piston rings so that the ring ends are as shown in the illustration.
NOTICE:
Do not align the ring ends.

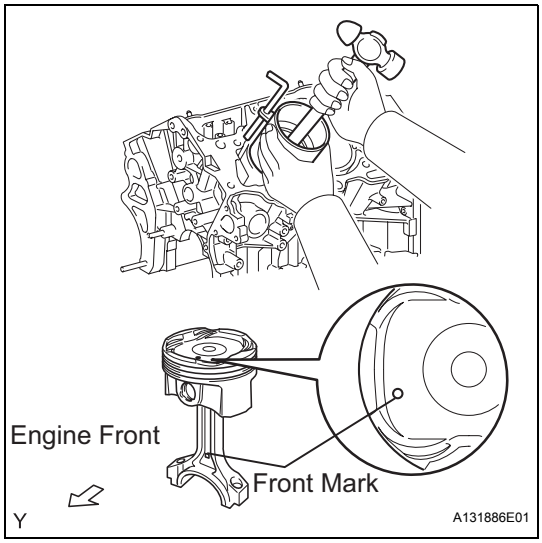

(c) Using a piston ring compressor, push the correctly numbered piston and connecting rod assembly into the cylinder with the front mark of the piston facing forward.
(d) Match the numbered connecting rod cap with the connecting rod.

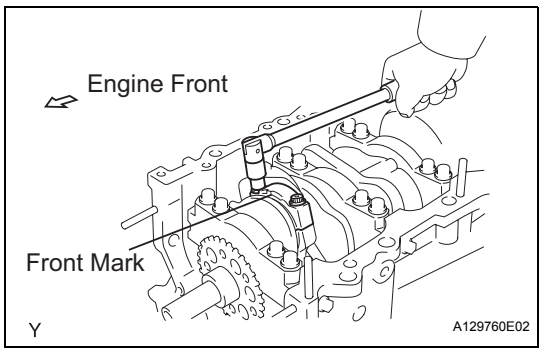

(e) Check that the front mark of the connecting rod cap is facing forward.
(f) Apply a light coat of engine oil to the threads and under the heads of the connecting rod cap bolts.
(g) Install the connecting cap bolts.
HINT:
The connecting cap bolts are tightened in 2 progressive steps.

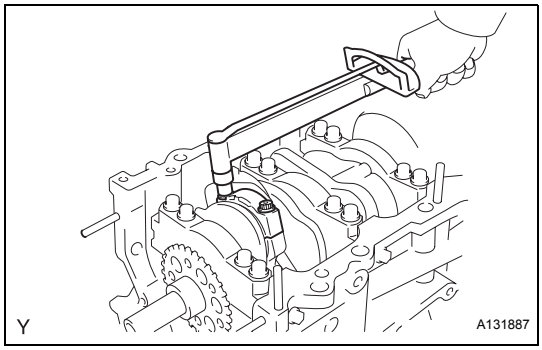

(h) Step 1
(1) Install and alternately tighten the bolts of the connecting rod cap in several steps.
Torque: 25 N*m (255 kgf*cm, 18 ft.*lbf)

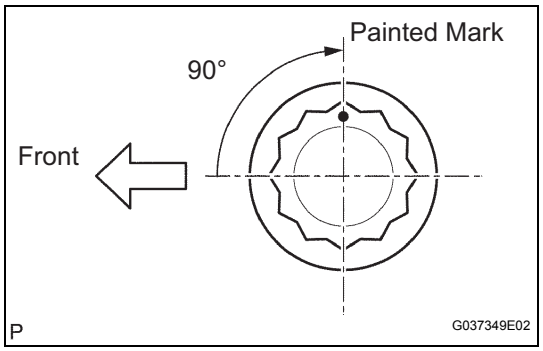

(i) Step 2
  (1) Mark the front side of each connecting cap bolt with paint.
  (2) Tighten the cap bolts another 90° as shown in the illustration.
  (3) Check the painted mark is now at a 90° angle to the front.
(j) Check that the crankshaft turns smoothly.
(k) Check the connecting rod thrust clearance.

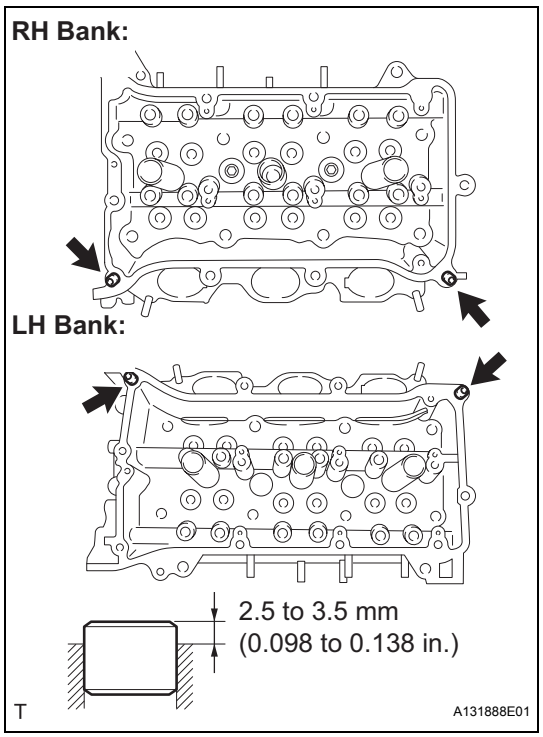

11. INSTALL RING PIN

(a) Using a plastic hammer, tap in 4 new ring pins to the specified protrusion height.
Specified protrusion height:
2.5 to 3.5 mm (0.098 to 0.138 in.)

EM

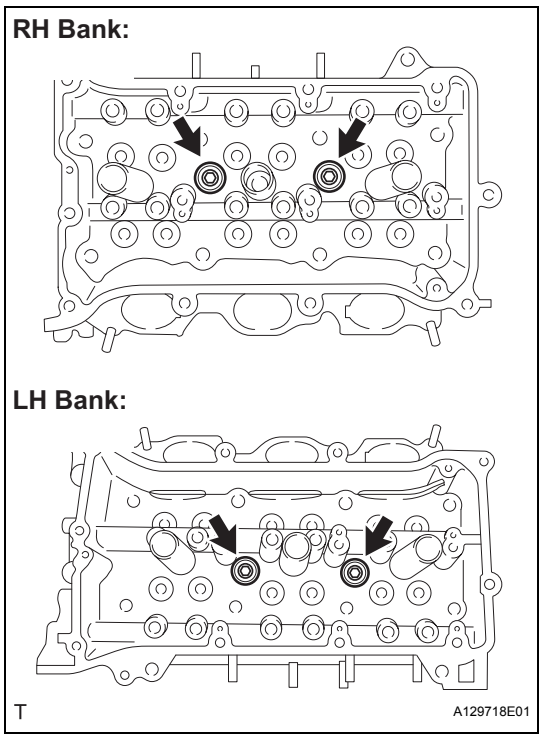

12. INSTALL WITH HEAD STRAIGHT SCREW PLUG NO.1

(a) Using a 10 mm hexagon wrench, install 4 new gaskets and the straight screw plugs.
Torque: 44 N*m (449 kgf*cm, 32 ft.*lbf)

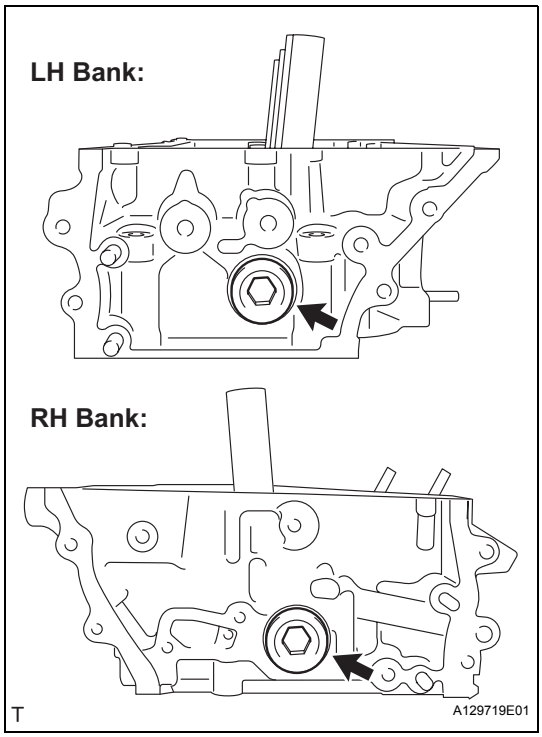

13. INSTALL WITH HEAD STRAIGHT SCREW PLUG NO.2

(a) Using a 14 mm hexagon wrench, install 2 new gaskets and the 2 straight screw plugs.
Torque: 80 N*m (816 kgf*cm, 59 ft.*lbf)

14. INSTALL STUD BOLT

NOTICE:
If the stud bolt is deformed or the threads are damaged, replace it.

(a) Using E6 and E8 "torx" socket wrenches, install the stud bolts.
Torque: A and B bolts
10 N*m (102 kgf*cm, 7 ft.*lbf)
C bolt
4.0 N*m (41 kgf*cm, 35 in.*lbf)

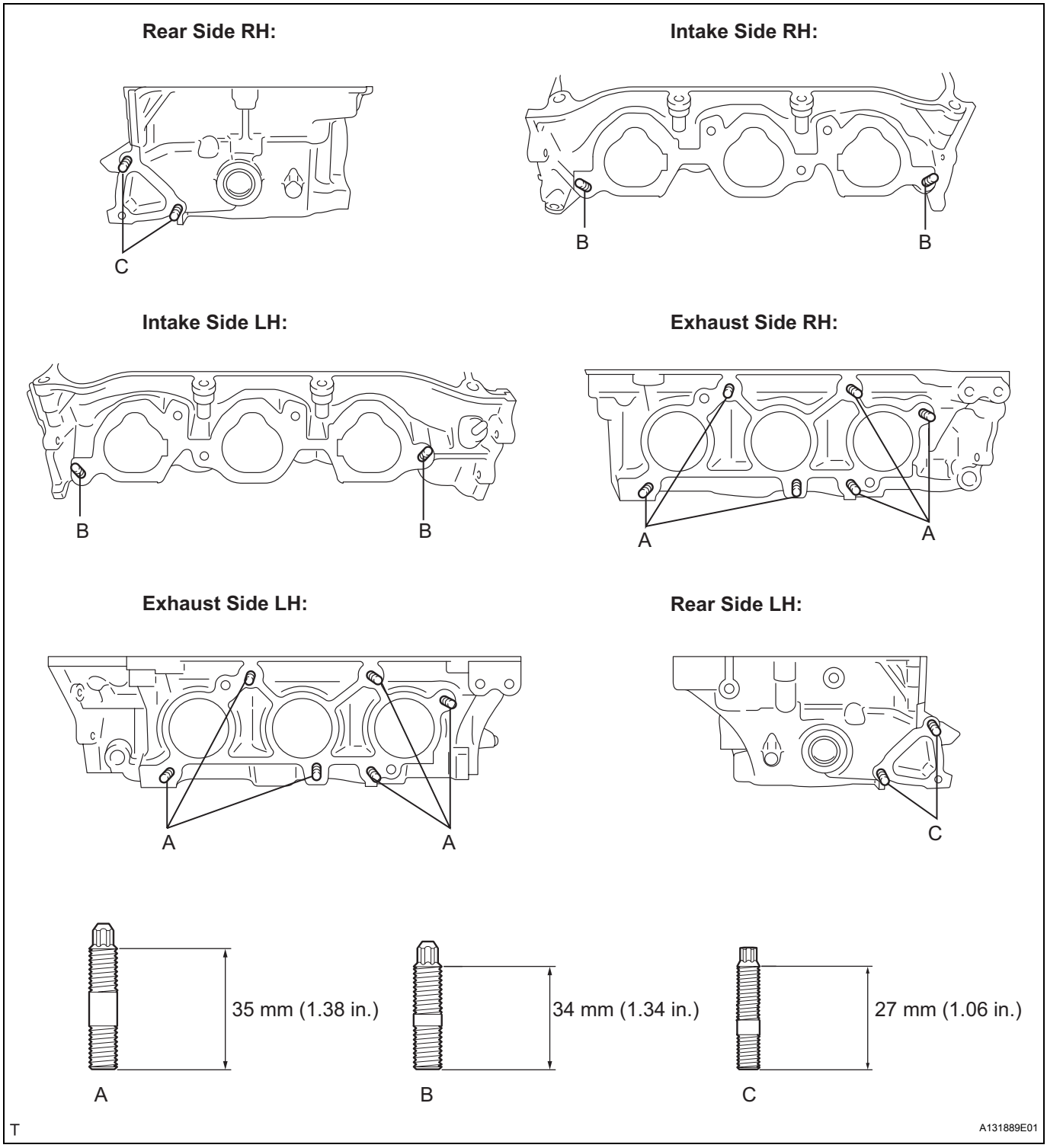

EM

15. INSTALL STRAIGHT PIN

(a) Using a plastic hammer, tap in 4 new straight pins as shown in the illustration.

Specified protrusion height:

17.5 to 19.5 mm (0.689 to 0.768 in.)

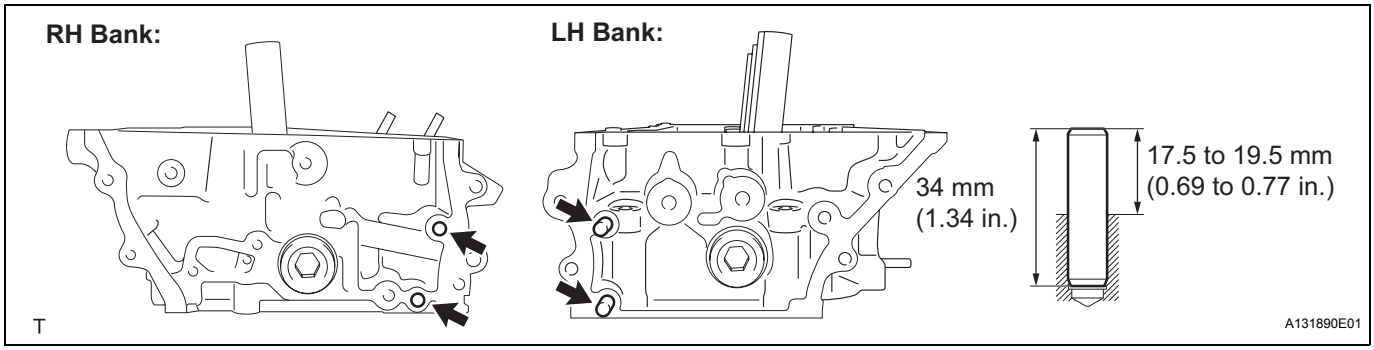

16. INSTALL VALVE SPRING SEAT

(a) Install the valve spring seats to the cylinder head.

17. INSTALL VALVE STEM OIL SEAL

(a) Apply a light coat of engine oil to new oil seals.
NOTICE:
Pay attention when installing the intake and exhaust oil seals. For example, installing the intake oil seal into the exhaust side or installing the exhaust oil seal to the intake side can cause installation problems later.
HINT:
The intake valve oil seals are white and the exhaust valve oil seals are black.

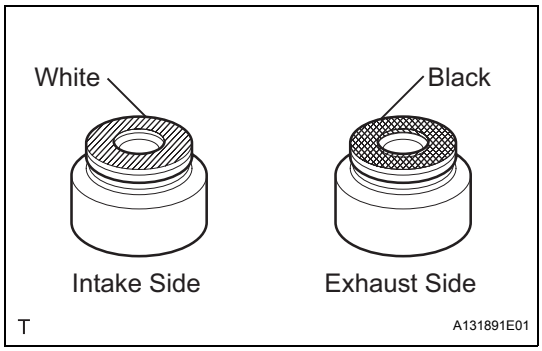

(b) Using SST, push in the oil seals.
SST 09201-41020
NOTICE:
Failure to use SST will cause the seal to be damaged or improperly seated.

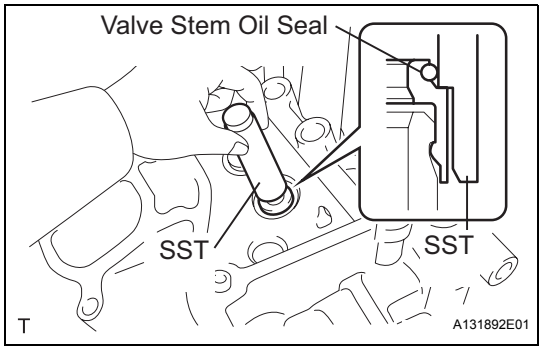

18. INSTALL INTAKE VALVE

(a) Apply a plenty of engine oil to the tip area of the intake valve shown in the illustration.

(b) Install the valve, compression spring and spring retainer to the cylinder head.
NOTICE:
Install the same parts in the same combination to the original locations.

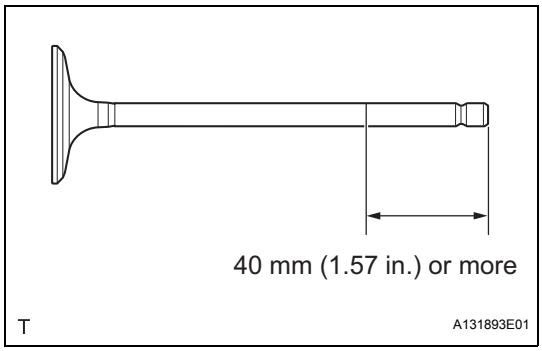

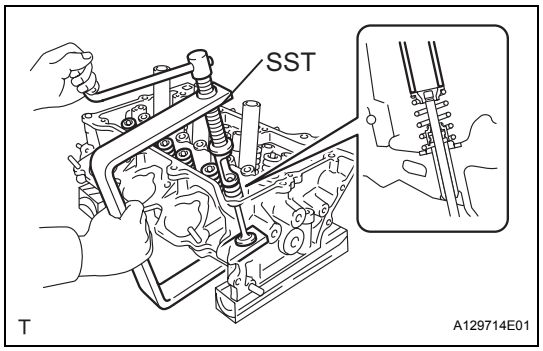

(c) Using SST and wooden blocks, compress the spring and install the 2 retainer locks.
SST 09202-70020 (09202-00010)

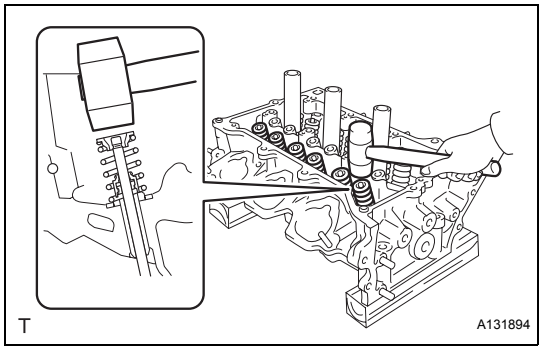

(d) Using a plastic hammer, lightly tap the valve stem tip to ensure a proper fit.
NOTICE:
Be careful not to damage the retainer.

19. INSTALL EXHAUST VALVE

(a) Apply a plenty of engine oil to the tip area of the intake valve shown in the illustration.

(b) Install the valve, compression spring and spring retainer to the cylinder head.
NOTICE:
Install the same parts in the same combination to the original locations.

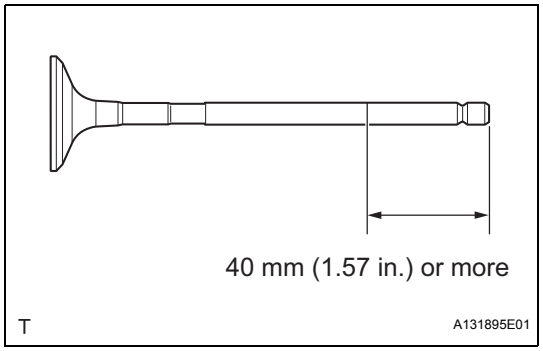

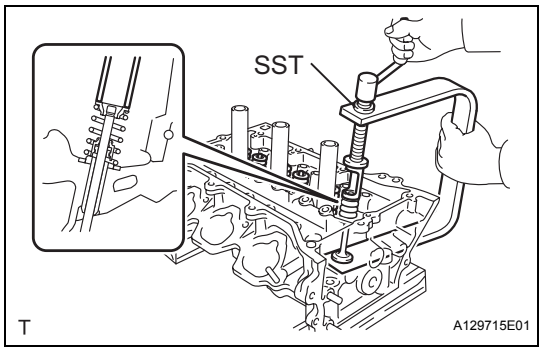

(c) Using SST and wooden blocks, compress the spring and install the 2 retainer locks.
SST 09202-70020 (09202-00010)

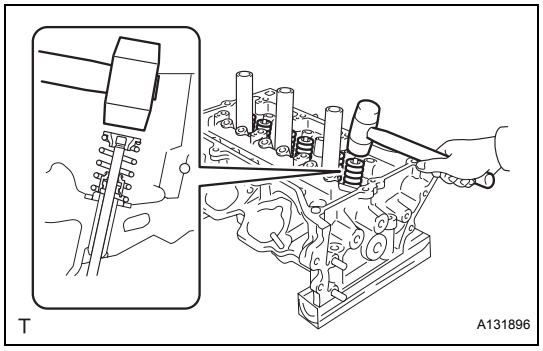

(d) Using a plastic hammer, lightly tap the valve stem tip to ensure a proper fit.
NOTICE:
Be careful not to damage the retainer.

20. INSTALL VALVE STEM CAP

(a) Apply a light coat of engine oil to the valve stem caps.

(b) Install the valve stem caps to the cylinder head.

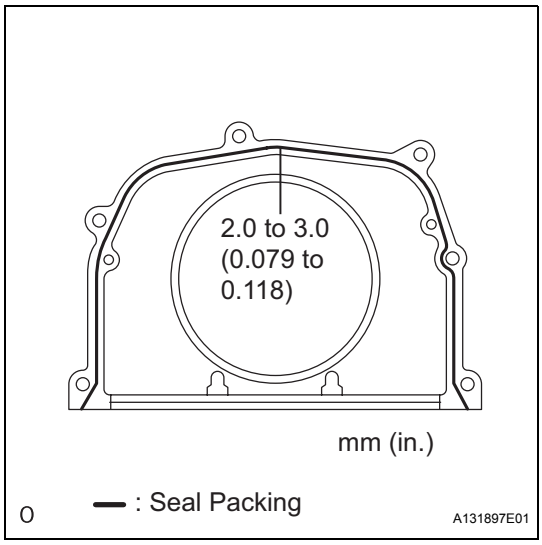

21. INSTALL ENGINE REAR OIL SEAL RETAINER

(a) Apply seal packing in a continuous bead as shown in the illustration.

Seal packing:
Part No. 08826-00080 or equivalent
Seal diameter:
2.0 to 3.0 mm (0.079 to 0.118 in.)
NOTICE:
- **Remove any oil from the contact surface.**
- **Install the crankcase within 3 minutes after applying seal packing.**
- **Do not start the engine for at least 2 hours after installation.**

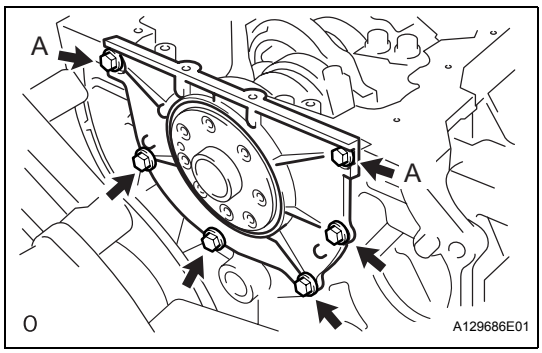

(b) Install the oil seal retainer with the 6 bolts.

Torque: 10 N*m (102 kgf*cm, 7 ft.*lbf)
NOTICE:
Be sure to apply adhesive 1324 to the bolts in the places indicated by A before installing them.
Adhesive:
Part No. 08833-00070, THREE BOND 1324 or equivalent

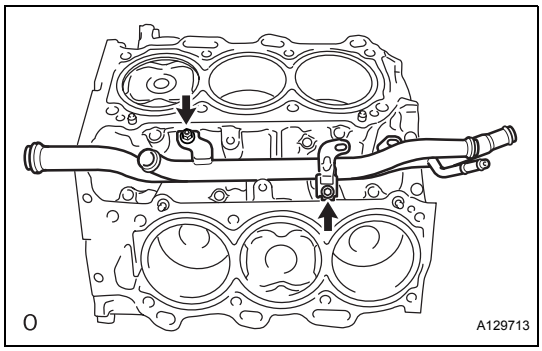

22. INSTALL WATER INLET PIPE

(a) Install the water inlet pipe with the 2 bolts.
Torque: 10 N*m (102 kgf*cm, 7 ft.*lbf)

(b) Install the water by-pass hose No. 1.

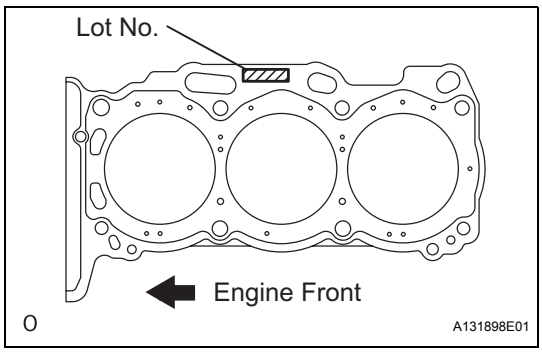

23. INSTALL CYLINDER HEAD SUB-ASSEMBLY

(a) Place the cylinder head gasket on the cylinder block surface with the front face of the Lot No. stamp upward.

NOTICE:
- **Be careful of the installation direction.**
- **Gently place the cylinder head in order not to damage the gasket with the bottom part of the head.**

(b) Place the cylinder head on the cylinder block.

NOTICE:
Ensure that no oil is on the mounting surface of the cylinder head.
HINT:
The cylinder head bolts are tightened in 3 progressive steps.

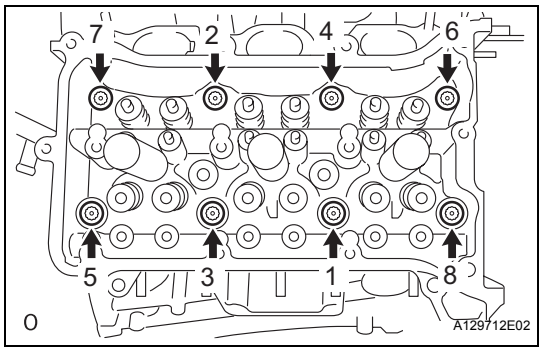

(c) Apply a light coat of engine oil to the threads and under the heads of the cylinder head bolts.

(d) Step 1
(1) Using a 10 mm bi-hexagon wrench, install and uniformly tighten the 8 cylinder head bolts with the plate washers in several steps and in the sequence shown in the illustration.
Torque: 36 N*m (367 kgf*cm, 27 ft.*lbf)

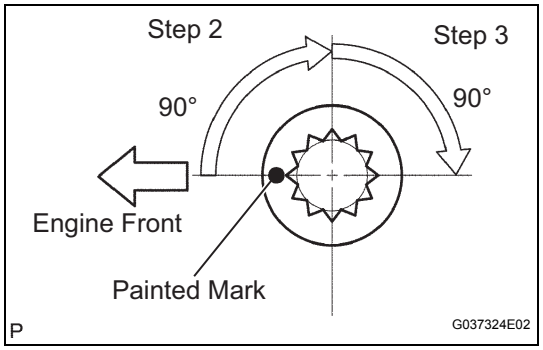

(e) Step 2
(1) Mark the cylinder head bolt head with paint as shown in the illustration.
(2) Tighten the cylinder head bolts another 90°.

(f) Step 3
(1) Tighten the cylinder head bolts by an additional 90°.
(2) Check that the painted mark is now facing rearward.

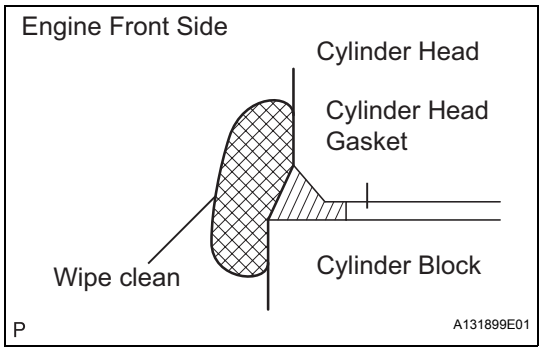

(g) Seal packing will seep out on the engine's front side. Thoroughly wipe clean any seal packing.

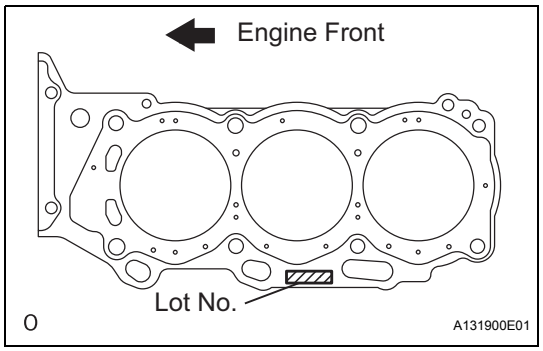

24. INSTALL CYLINDER HEAD LH

(a) Place the cylinder head gasket on the cylinder block surface with the front face of the Lot No. stamp upward.
NOTICE:
- **Be careful of the installation direction.**
- **Gently place the cylinder head in order not to damage the gasket with the bottom part of the head.**

(b) Place the cylinder head on the cylinder block.
NOTICE:
Ensure that no oil is on the mounting surface of the cylinder head.
HINT:
The cylinder head bolts are tightened in 3 progressive steps.

(c) Apply a light coat of engine oil to the threads and under the heads of the cylinder head bolts.

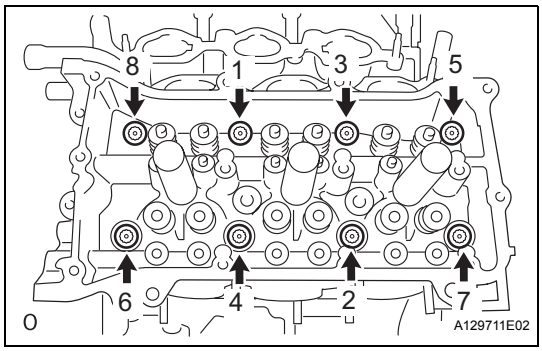

(d) Step 1
(1) Using a 10 mm bi-hexagon wrench, install and uniformly tighten the 8 cylinder head bolts with the plate washers in several steps and in the sequence shown in the illustration.
Torque: 36 N*m (367 kgf*cm, 27 ft.*lbf)

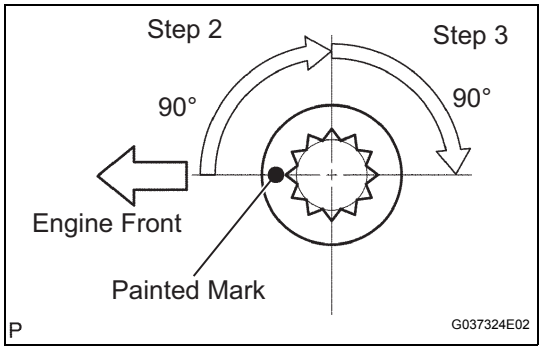

(e) Step 2
(1) Mark the cylinder head bolt head with paint as shown in the illustration.
(2) Tighten the cylinder head bolts another 90°.
(f) Step 3
(1) Tighten the cylinder head bolts by an additional 90°.
(2) Check that the painted mark is now facing rearward.

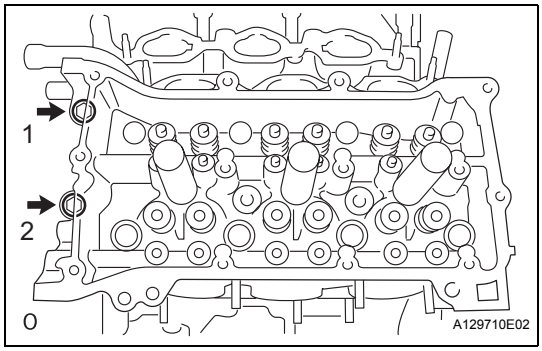

(g) Tighten the 2 bolts in the order shown in the illustration.
Torque: 30 N*m (306 kgf*cm, 22 ft.*lbf)
NOTICE:
Only use the specifications stated above when tightening the bolts 1 and 2 shown in the illustration.

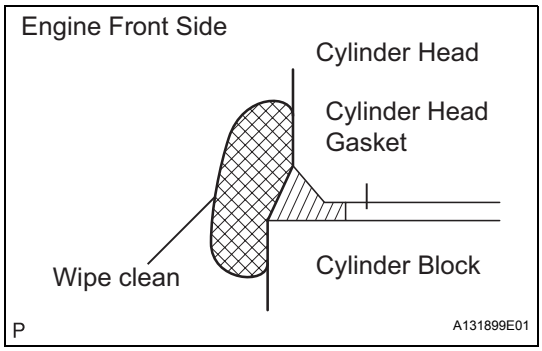

(h) Seal packing will seep out on the engine's front side. Thoroughly wipe clean any seal packing.

25. INSTALL VALVE LASH ADJUSTER ASSEMBLY
NOTICE:
- **Keep the lash adjuster free from dirt and foreign objects.**
- **Only use clean engine oil.**

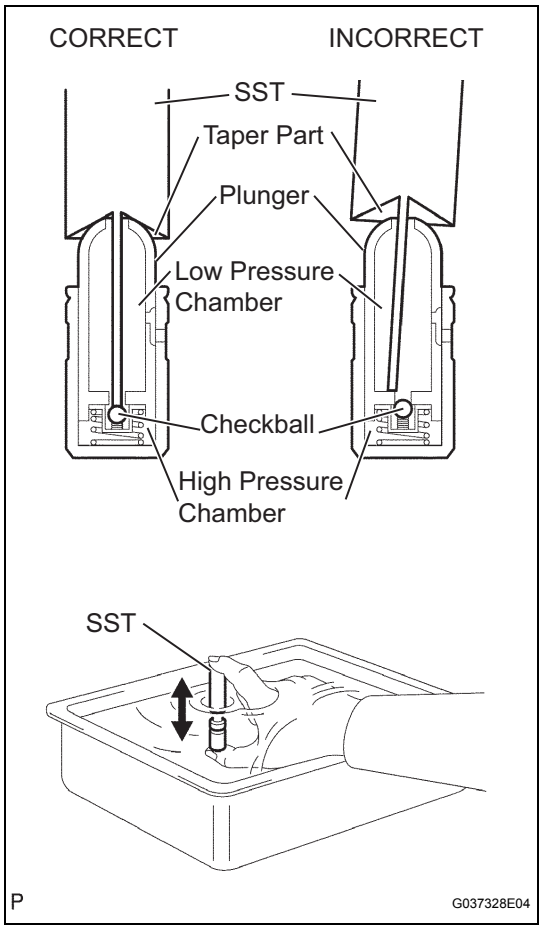

(a) Place the lash adjuster into a container full of engine oil.
(b) Insert SST's tip into the lash adjuster's plunger and use the tip to press down on the checkball inside the plunger.
SST 09276-75010
(c) Squeeze the SST and lash adjuster together to move the plunger up and down 5 to 6 times.
(d) Check the movement of the plunger and bleed the air.
OK:
Plunger moves up and down.
NOTICE:
When bleeding high-pressure air from the compression chamber, make sure that the tip of the SST is actually pressing the checkball as shown in the illustration. If the checkball is not pressed, air will not bleed.
(e) After bleeding the air, remove the SST. Then quickly and firmly press the plunger with a finger.
OK:
Plunger is very difficult to move.
If the result is not as specified, replace the lash adjuster.
(f) Install the lash adjusters.
NOTICE:
Install the lash adjuster at the same place it was removed from.

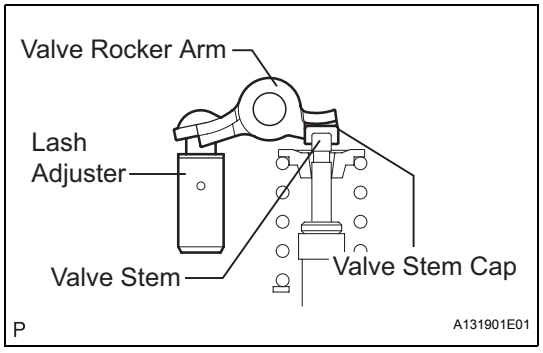

26. INSTALL VALVE ROCKER ARM SUB-ASSEMBLY NO.1
(a) Apply engine oil to the lash adjuster tips and valve stem cap ends.
(b) Make sure that the valve rocker arms are installed as shown in the illustration.

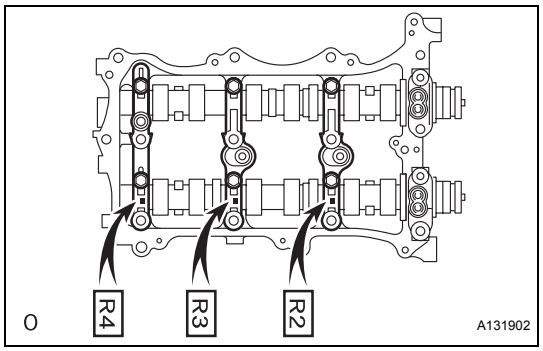

27. INSTALL CAMSHAFT BEARING CAP RH
(a) Apply engine oil to the camshaft journals, camshaft housings and bearing caps.
(b) Install the camshaft and camshaft No. 2 to the camshaft housing RH.
(c) Make sure of the marks and numbers on the camshaft bearing caps and place them in each proper position and direction.

EM

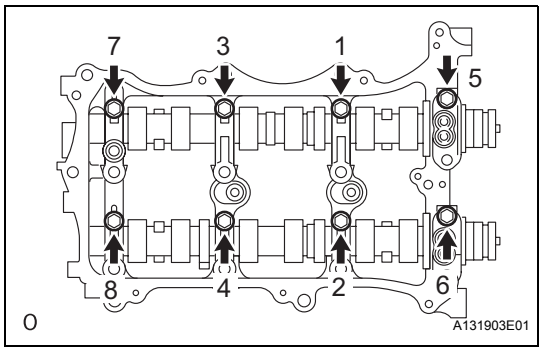

(d) Temporarily tighten the 8 bolts in the order shown in the illustration.
Torque: 10 N*m (102 kgf*cm, 7 ft.*lbf)

28. INSTALL CAMSHAFT HOUSING SUB-ASSEMBLY RH

(a) Apply seal packing in a continuous bead as shown in the illustration.
Seal packing:
Part No. 08826-00080 or equivalent
Seal diameter:
3.5 to 4.5 mm (0.138 to 0.177 in.)
NOTICE:
- **Remove any oil from the contact surface.**
- **Install the camshaft housing sub-assembly RH within 3 minutes and tighten the bolts within 15 minutes after applying seal packing.**
- **Do not start the engine for at least 2 hours after installing.**

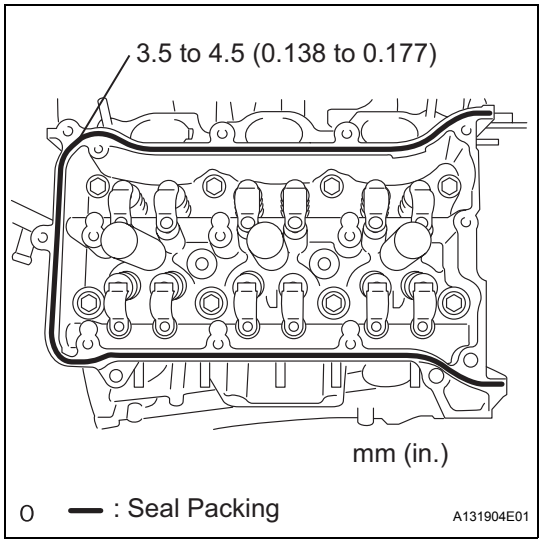

(b) Install the camshaft housing RH, and tighten the 12 bolts in the order shown in the illustration.
Torque: 25 N*m (255 kgf*cm, 18 ft.*lbf)
NOTICE:
Make sure that the knock pin of the camshaft is positioned as shown in the illustration before installing the camshaft housing RH.

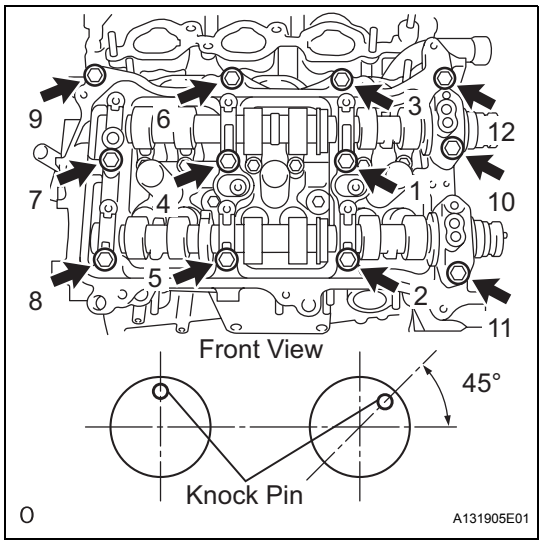

(c) Tighten the 8 bolts in the order shown in the illustration.
Torque: 16 N*m (163 kgf*cm, 12 ft.*lbf)
NOTICE:
Thoroughly wipe clean any seal packing.

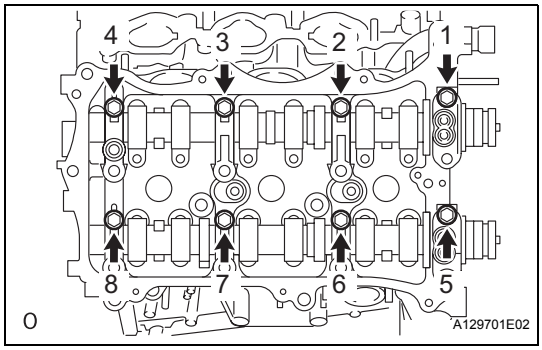

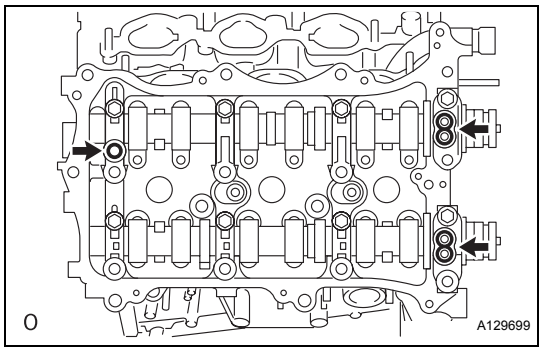

(d) Install 3 new gaskets.

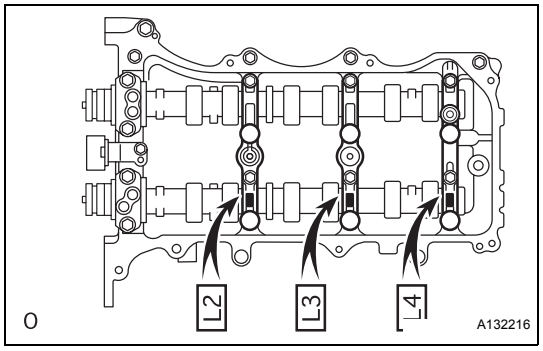

29. INSTALL CAMSHAFT BEARING CAP

(a) Apply engine oil to the camshaft journals, camshaft housings and bearing caps.

(b) Install the camshaft No. 3 and camshaft No. 4 to the camshaft housing LH.

(c) Make sure of the marks and numbers on the camshaft bearing caps and place them in each proper position and direction.

EM

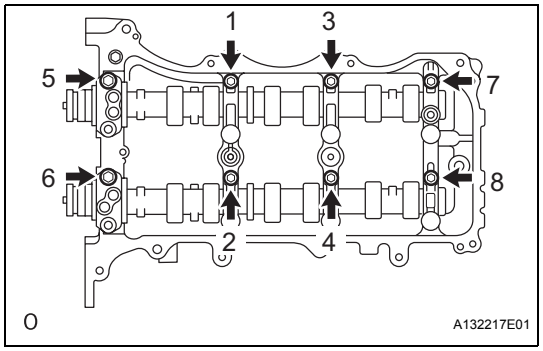

(d) Temporarily tighten the 8 bolts in the order shown in the illustration.
Torque: 10 N*m (102 kgf*cm, 7 ft.*lbf)

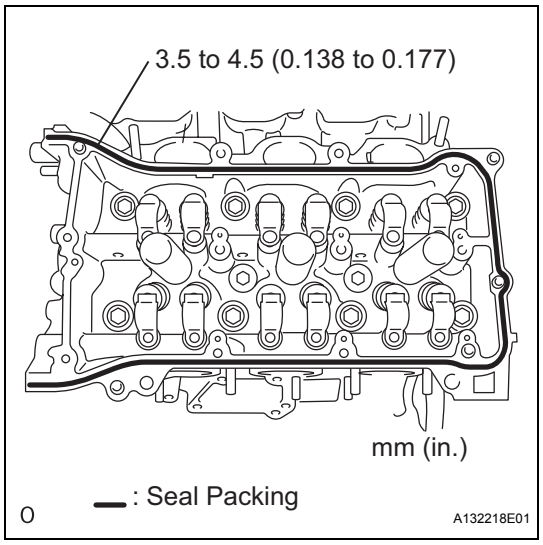

30. INSTALL CAMSHAFT HOUSING SUB-ASSEMBLY LH

(a) Apply seal packing in a continuous bead as shown in the illustration.
Seal packing:
Part No. 08826-00080 or equivalent
Seal diameter:
3.5 to 4.5 mm (0.138 to 0.177 in.)
NOTICE:
- **Remove any oil from the contact surface.**
- **Install the camshaft housing sub-assembly LH within 3 minutes and tighten the bolts within 15 minutes after applying seal packing.**
- **Do not start the engine for at least 2 hours after installing.**

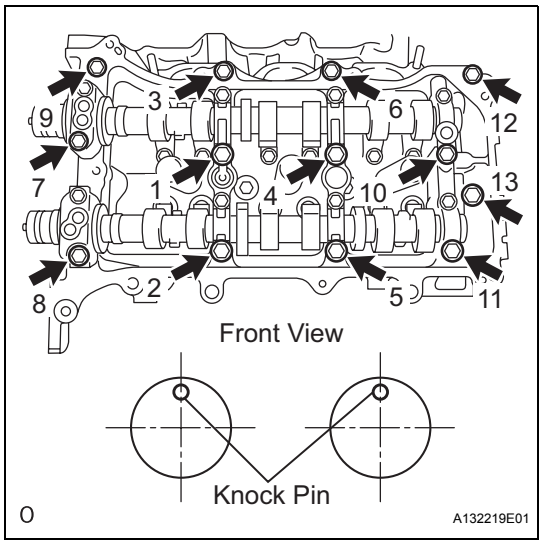

(b) Install the camshaft housing LH, and tighten the 13 bolts in the order shown in the illustration.
Torque: 25 N*m (255 kgf*cm, 18 ft.*lbf)
NOTICE:
Make sure that the knock pin of the camshaft is positioned as shown in the illustration before installing the camshaft housing LH.

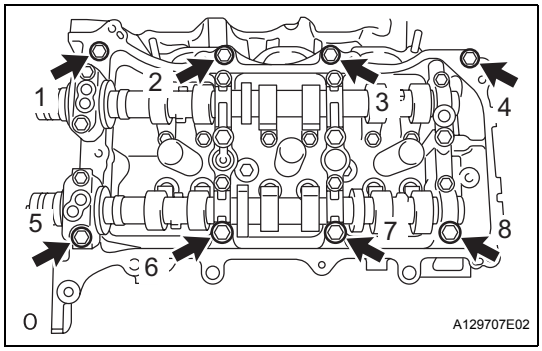

(c) Tighten the 8 bolts in the order shown in the illustration.
Torque: 16 N*m (163 kgf*cm, 12 ft.*lbf)
NOTICE:
Thoroughly wipe clean any seal packing.

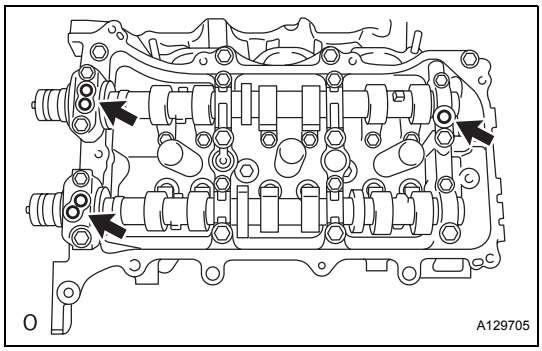

(d) Install 3 new gaskets.

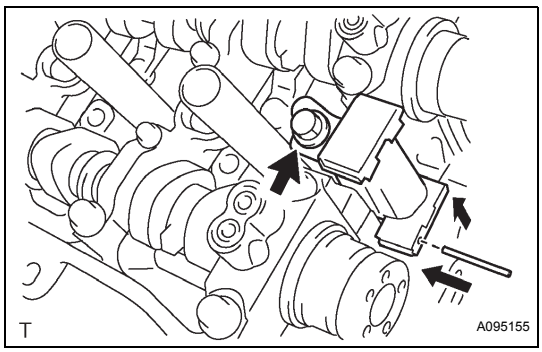

31. INSTALL CHAIN TENSIONER ASSEMBLY NO.2

(a) Install the chain tensioner No. 2 with the bolt.
Torque: 21 N*m (214 kgf*cm, 15 ft.*lbf)

(b) While pushing in the tensioner, insert a pin of ϕ1.0 mm (0.039 in.) into the hole to fix it.

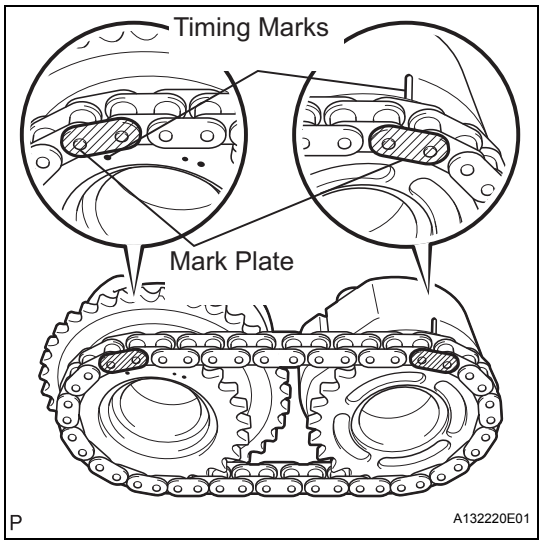

32. INSTALL CAMSHAFT TIMING GEARS AND NO. 2 CHAIN (for RH BANK)

(a) Align the mark plate (yellow) with the timing marks (1 dot mark) of the camshaft timing gears as shown in the illustration.

(b) Apply a small amount of engine oil to the bolt threads and bolt-seating surface.

(c) Align the knock pin of the camshaft with the pin hole of the camshaft timing gear. Install the camshaft timing gear and camshaft timing exhaust gear RH with No. 2 chain installed.

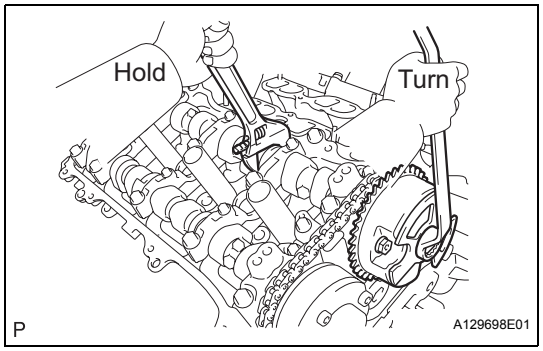

(d) Hold the hexagonal portion of the camshaft with a wrench, and tighten the 2 bolts.
Torque: 100 N*m (1,020 kgf*cm, 74 ft.*lbf)

(e) Remove the pin from the chain tensioner No. 2.

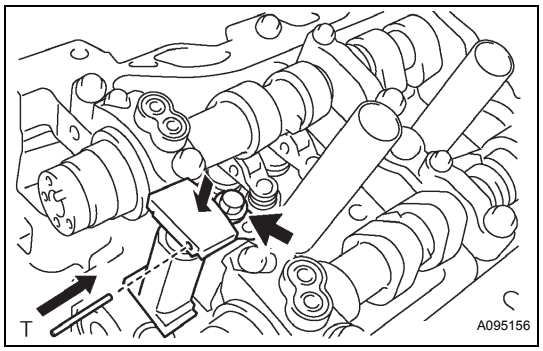

33. INSTALL CHAIN TENSIONER ASSEMBLY NO.3

(a) Install the chain tensioner No. 3 with the bolt.
Torque: 21 N*m (214 kgf*cm, 15 ft.*lbf)

(b) While pushing in the tensioner, insert a pin of ϕ1.0 mm (0.039 in.) into the hole to fix it.

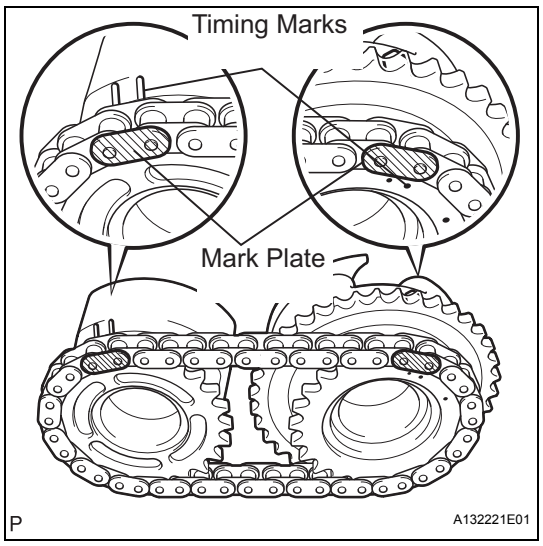

34. INSTALL CAMSHAFT TIMING GEARS AND NO. 2 CHAIN (for LH BANK)

(a) Align the mark plate (yellow) with the timing marks (2 dot mark) of the camshaft timing gears as shown in the illustration.

(b) Apply a small amount of engine oil to the bolt threads and bolt-seating surface.

(c) Align the knock pin of the camshaft with the pin hole of the camshaft timing gear. Install the camshaft timing gear and camshaft timing exhaust gear LH with No. 2 chain installed.

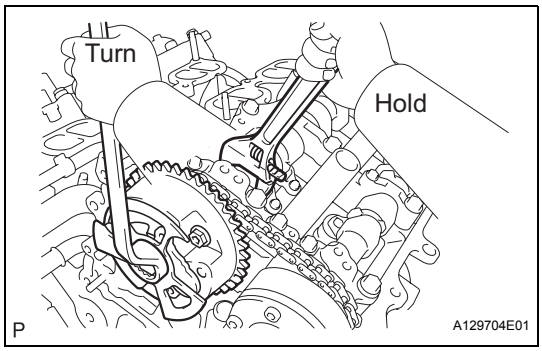

(d) Hold the hexagonal portion of the camshaft with a wrench, and tighten the 2 bolts.
Torque: 100 N*m (1,020 kgf*cm, 74 ft.*lbf)
(e) Remove the pin from the chain tensioner No. 2.

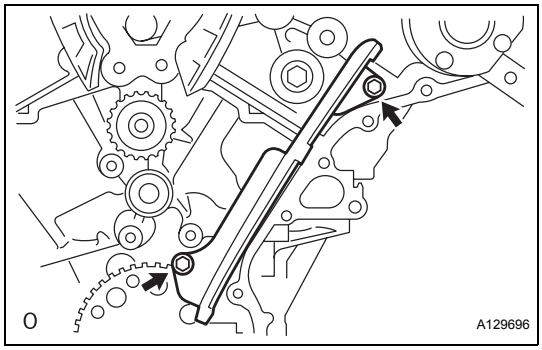

35. INSTALL CHAIN VIBRATION DAMPER NO.1
(a) Install the chain vibration damper No. 1 with the 2 bolts.
Torque: 23 N*m (230 kgf*cm, 17 ft.*lbf)

36. INSTALL CHAIN VIBRATION DAMPER NO.2
(a) Install the 2 chain vibration damper.

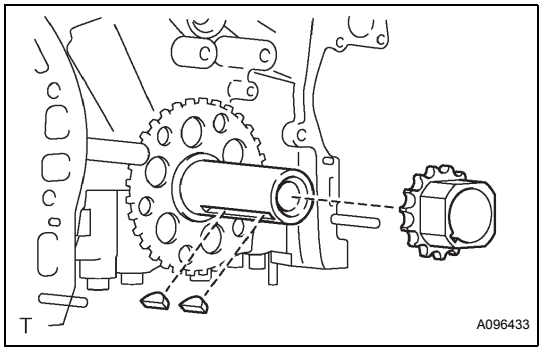

37. INSTALL CRANKSHAFT TIMING GEAR
(a) Install the timing gear set keys and timing gear as shown in the illustration.

38. INSTALL IDLE SPROCKET ASSEMBLY
(a) Apply a light coat of engine oil to rotating surface of the idle gear shaft No. 1.

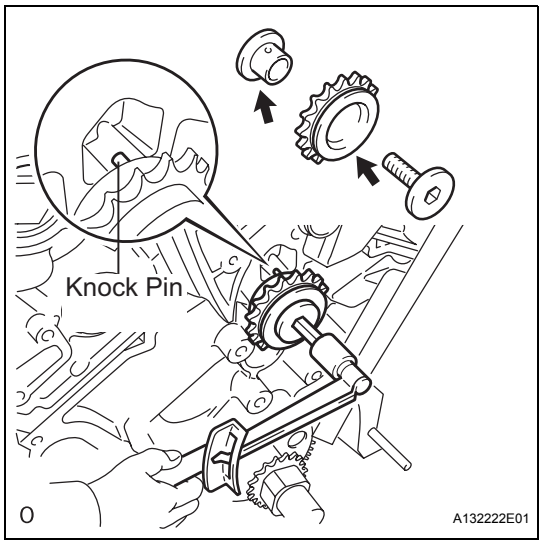

(b) Temporarily install the idle gear shaft No. 1 and idle sprocket with the idle gear shaft No. 2 while aligning the knock pin of the idle gear shaft No. 1 with the knock pin groove of the cylinder block.
NOTICE:
Be careful of the idle gear direction.
(c) Using a 10 mm hexagon wrench, tighten the idle gear shaft No. 2.
Torque: 60 N*m (612 kgf*cm, 44 ft.*lbf)

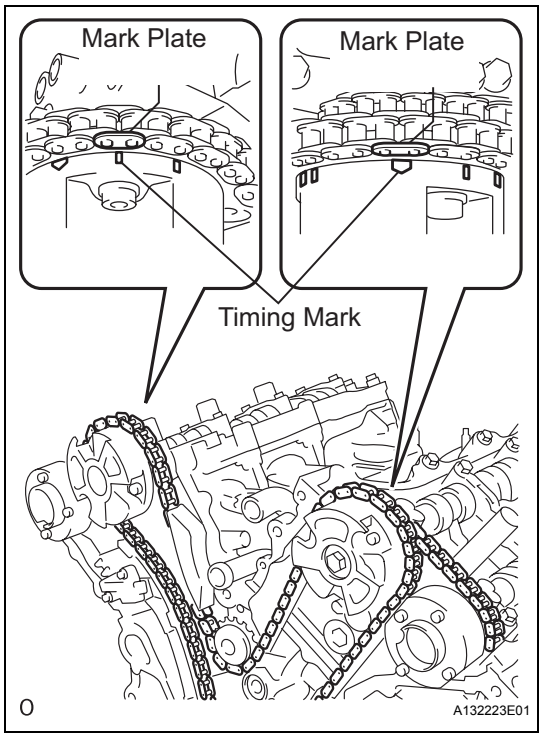

39. INSTALL CHAIN SUB-ASSEMBLY

(a) Align the mark plate and timing mark as shown in the illustration and temporarily install the chain.
NOTICE:
Do not pass the chain over the crankshaft yet.
HINT:
The chain mark plate is orange.

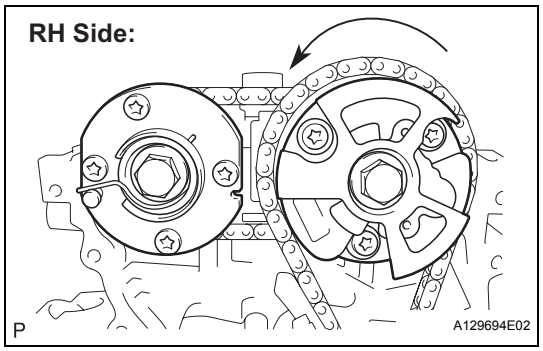

(b) Turn the camshaft timing gear assembly on the RH bank counterclockwise to tighten the chain between banks.

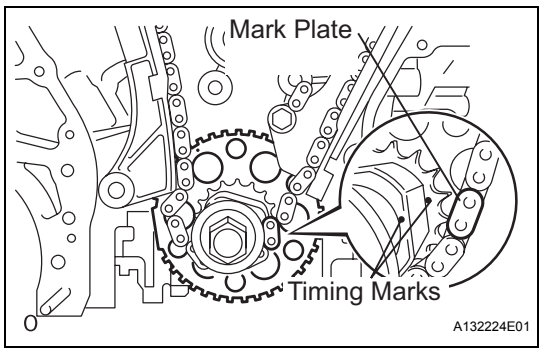

(c) Align the mark plate and timing mark as shown in the illustration and install the chain onto the crankshaft timing gear.
HINT:
The chain mark plate is yellow.

(d) Temporarily tighten the pulley set bolt.

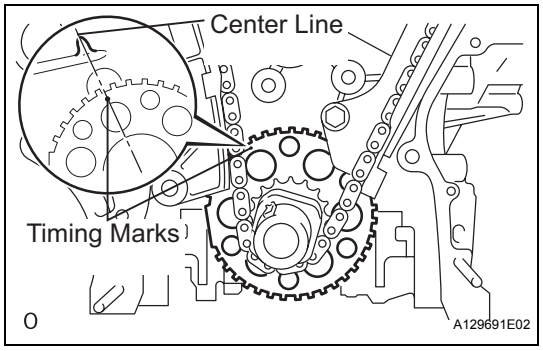

(e) Turn the crankshaft clockwise to set it to the RH block bore center line (TDC / compression).

40. INSTALL CHAIN TENSIONER SLIPPER

(a) Install the chain tensioner slipper.

EM

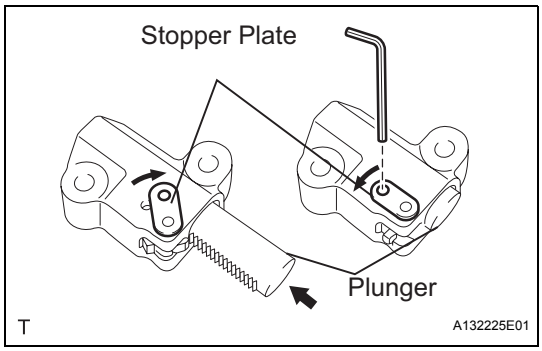

41. INSTALL CHAIN TENSIONER ASSEMBLY NO.1

(a) Move the stopper plate upward to release the lock, and push the plunger deep into the tensioner.

(b) Move the stopper plate downward to set the lock, and insert a hexagon wrench into the hole of the stopper plate.

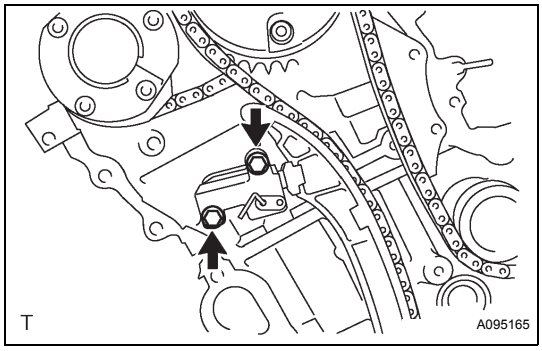

(c) Install the chain tensioner No. 1 with the 2 bolts.
Torque: 10 N*m (102 kgf*cm, 7 ft.*lbf)

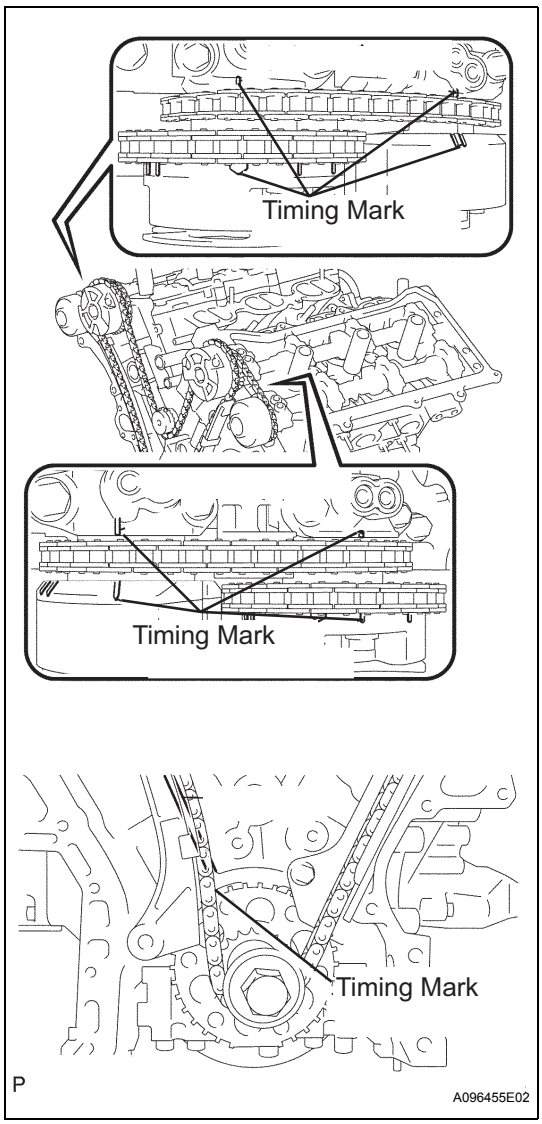

(d) Remove the lock pin of the chain tensioner assembly No. 1. Check that each timing mark is aligned with the crankshaft at the TDC / compression.

(e) Remove the pulley set bolt.

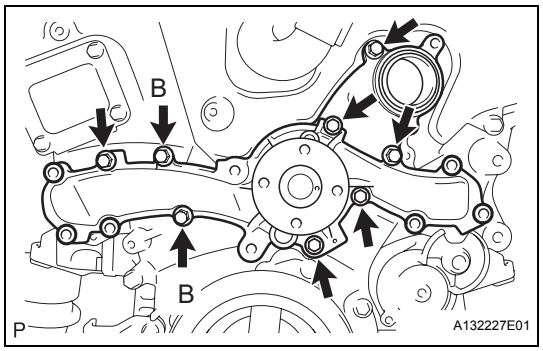

42. INSTALL WATER PUMP ASSEMBLY

(a) Install a new gasket and the water pump with the 8 bolts.

Torque: 9.1 N*m (93 kgf*cm, 81 in.*lbf)

NOTICE:

Be sure to replace the bolts indicated by B with new ones or reuse them after applying adhesive 1344.

43. INSTALL TIMING CHAIN COVER SUB-ASSEMBLY

(a) Install a new gasket and the chain cover plate with the 4 bolts.

Torque: 9.1 N*m (93 kgf*cm, 81 in.*lbf)

(b) Apply seal packing in a continuous bead to the engine unit as shown in the following illustration.

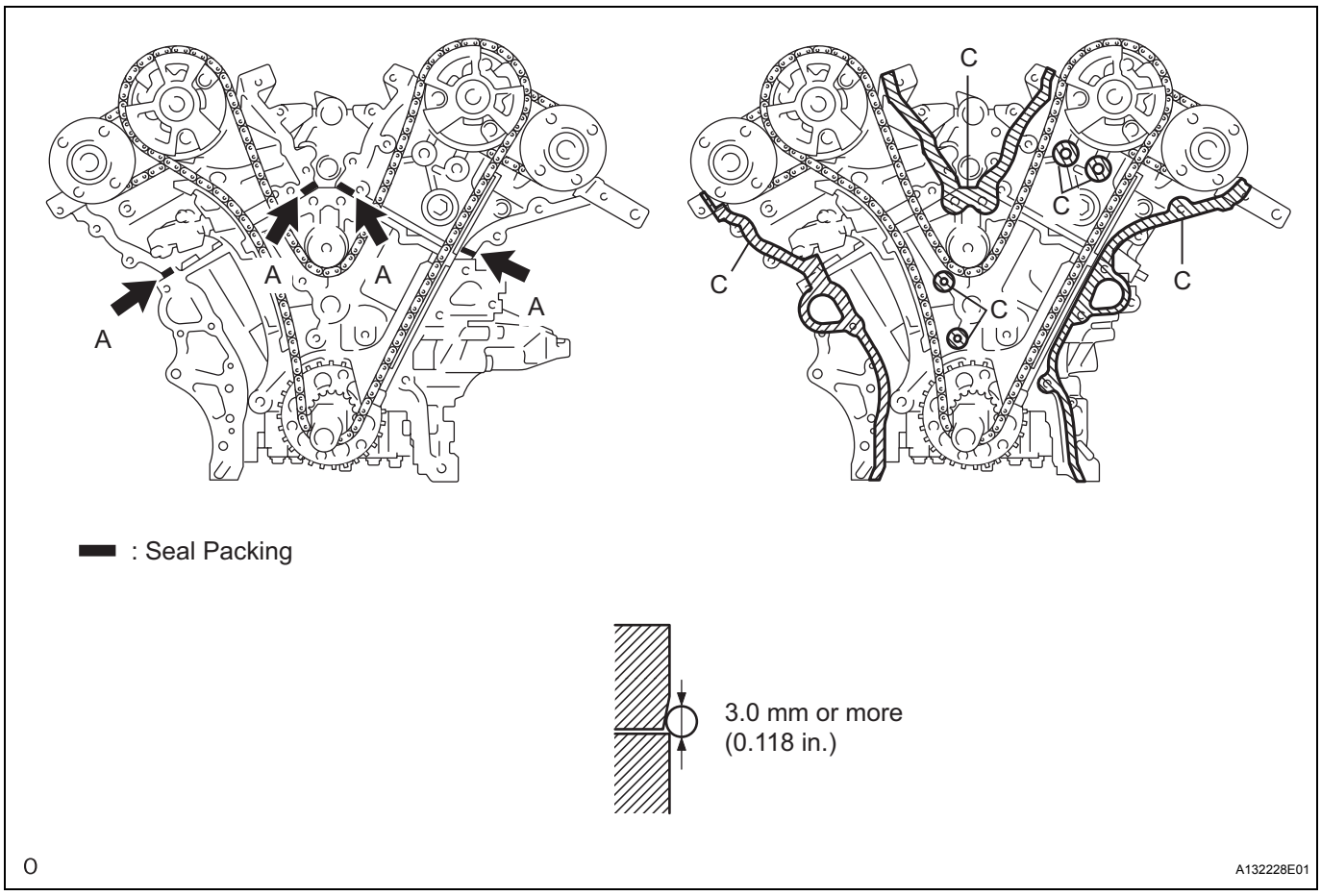

Seal packing:

Part No. 08826-00080 or equivalent

Seal width:

3.0 mm or more (0.118 in.)

NOTICE:

- **Be sure to clean and degrease the contact surfaces, especially the areas indicated by C in the illustration.**
- **When the contact surfaces are wet, degrease with cleaning agent and wipe off with an oil-free cloth before applying seal packing.**

- **Install the crankcase within 3 minutes and tighten the bolts within 15 minutes after applying seal packing.**
- **Do not start the engine for at least 2 hours after installation.**

(c) Apply seal packing in a continuous bead to the timing chain cover as shown in the following illustration.

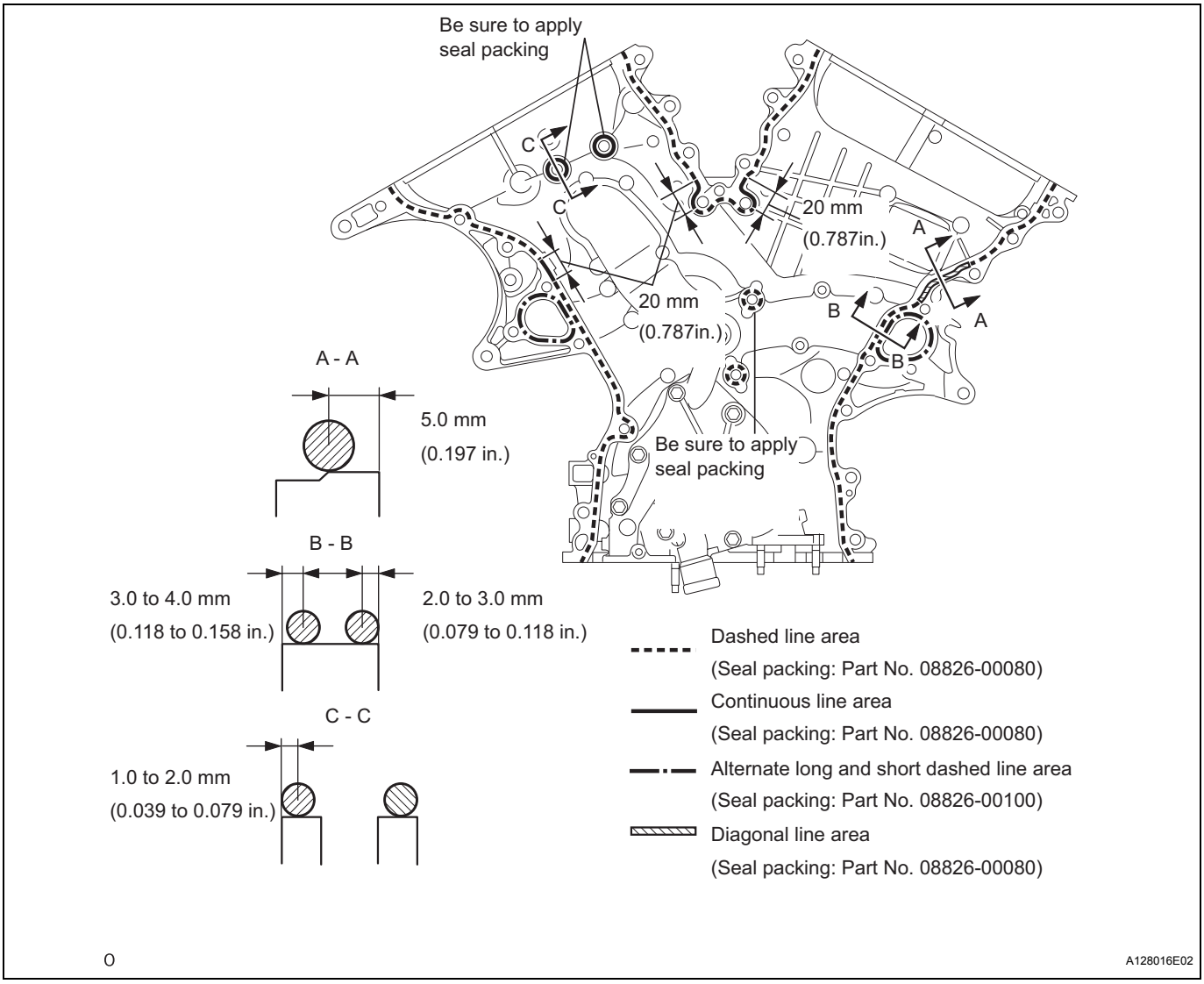

Seal packing:
08826-00080 or equivalent
08826-00100 or equivalent

NOTICE:

- **When the contact surfaces are wet, degrease with cleaning agent and wipe off with an oil-free cloth before applying seal packing.**
- **Install the crankcase within 3 minutes and tighten the bolts within 15 minutes after applying seal packing.**
- **Do not start the engine for at least 2 hours after installation.**

HINT:
Apply seal packing referring to the table and illustration below.

Area	Seal Packing Diameter	Application Position from Inside Seal Line
Dashed line area	3.5 mm or more (0.138 in.)	3.0 to 4.0 mm (0.118 to 0.158 in.)
Continuous line area	4.5 mm or more (0.177 in.)	3.0 to 4.0 mm (0.118 to 0.158 in.)
Alternate long and short dashed line area	3.5 mm or more (0.138 in.)	2.0 to 3.0 mm (0.079 to 0.118 in.)
Diagonal line area	6.0 mm or more (0.236 in.)	5.0 mm (0.197 in.)

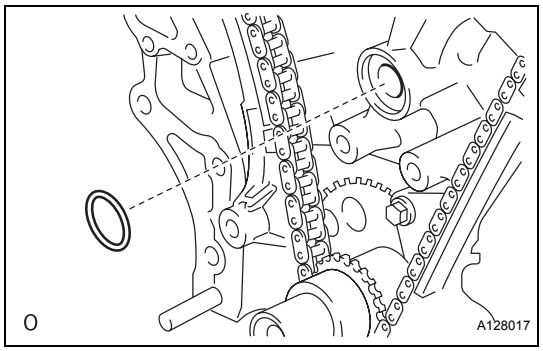

(d) Install a new gasket.

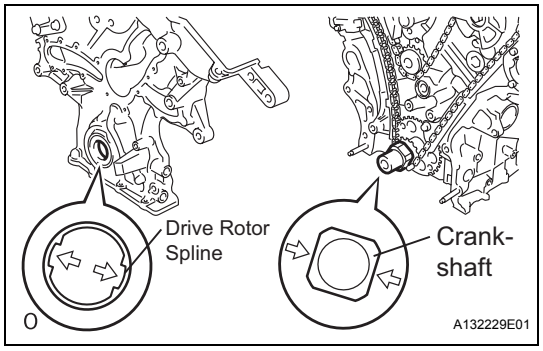

(e) Align the oil pump's drive rotor spline and the crankshaft as shown in the illustration. Install the spline and chain cover to the crankshaft.
(f) Loosely install the timing chain cover with the 23 bolts and 2 nuts, but do not tighten the bolts and 2 nuts yet.

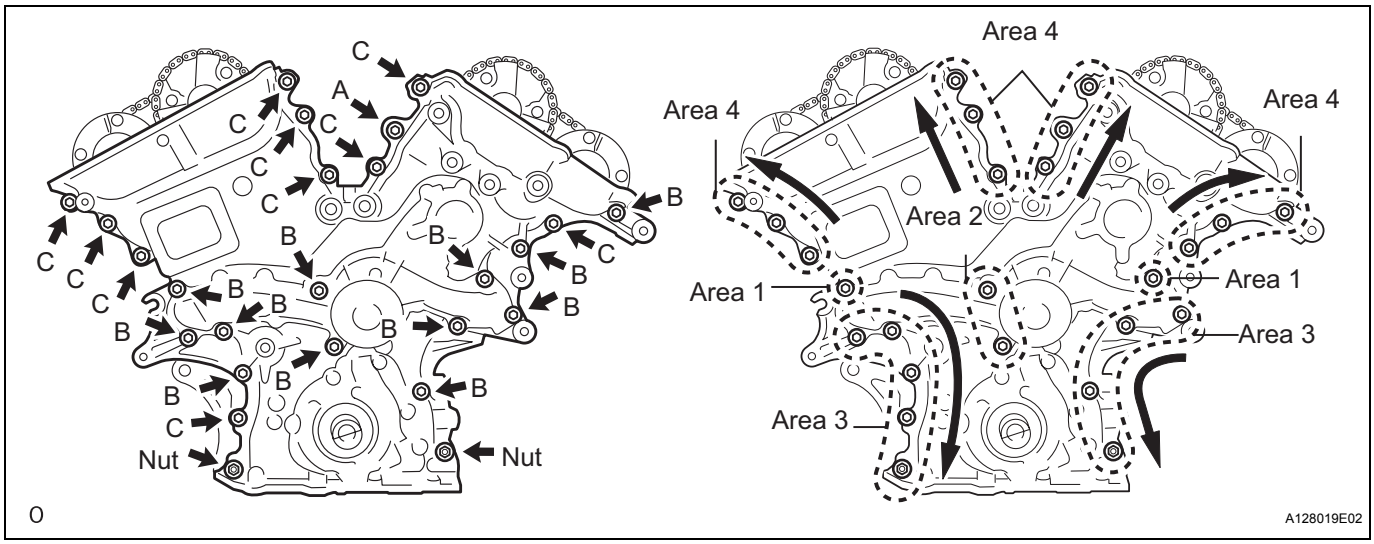

NOTICE:
Make sure that there is no oil on the bolt threads.
HINT:
Bolt length

Item	Length
Bolt A	40 mm (1.57 in.)

Item	Length
Bolt B	55 mm (2.17 in.)
Bolt C	25 mm (0.98 in.)

(g) Fully tighten the bolts in this order: Area 1 and Area 2.
Torque: 21 N*m (214 kgf*cm, 15 ft.*lbf)
(h) Fully tighten the bolts and nuts in this order: Area 3.
Torque: 21 N*m (214 kgf*cm, 15 ft.*lbf)
(i) Fully tighten the bolts in this order: Area 4.
Torque: Bolt A
43 N*m (438 kgf*cm, 32 ft.*lbf)
Bolts except A
21 N*m (214 kgf*cm, 15 ft.*lbf)

EM

44. INSTALL WATER INLET HOUSING

(a) Install 2 new O-rings.
(b) Apply soapy water to the O-ring.

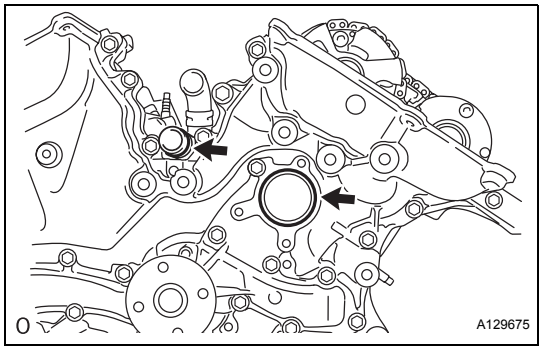

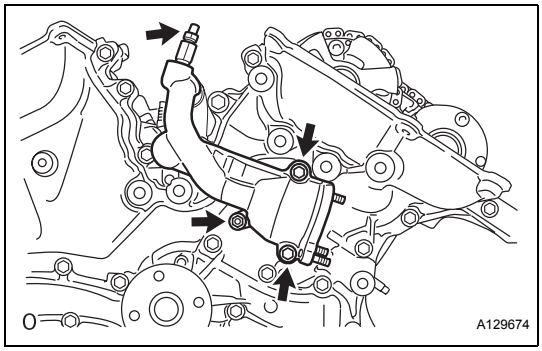

(c) Install the water inlet with the 2 bolts and nut.
Torque: 10 N*m (102 kgf*cm, 7 ft.*lbf)

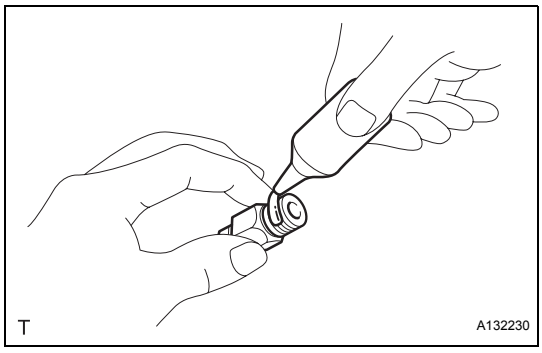

(d) Apply adhesive around the drain cock.
Adhesive:
Part No. 08833-00070, THREE BOND 1324 or equivalent.
(e) Install the water drain cock to the water inlet housing.
Torque: 30 N*m (306 kgf*cm, 22 ft.*lbf)
(f) Install the water drain cock plug to the water drain cock.
Torque: 13 N*m (130 kgf*cm, 9 ft.*lbf)
(g) Install a new gasket to the thermostat.

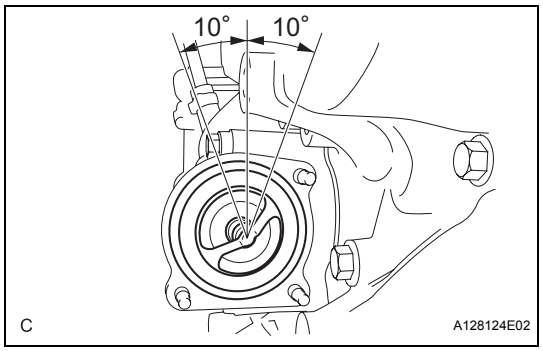

(h) Align the thermostat jiggle valve with the upper stud bolt, and insert the thermostat in the water inlet housing.
HINT:
The jiggle valve may be set within 10° of either side of the prescribed position.

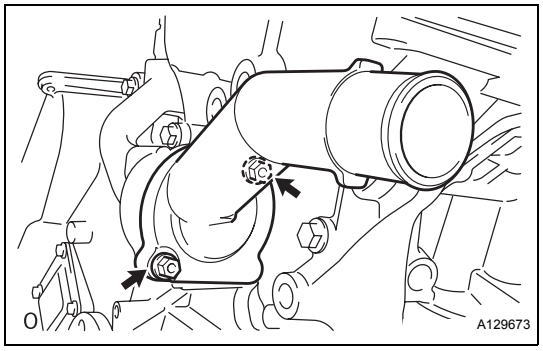

(i) Install the water inlet with the 2 nuts.
Torque: 10 N*m (102 kgf*cm, 7 ft.*lbf)

EM

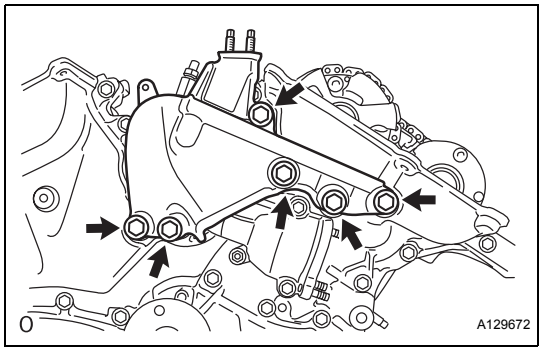

45. INSTALL ENGINE MOUNTING BRACKET FRONT NO.1 LH

(a) Install the engine mounting bracket front No. 1 LH with the 6 bolts.
Torque: 54 N*m (551 kgf*cm, 40 ft.*lbf)
NOTICE:
- **Install the water inlet and mounting bracket within 15 minutes after installing the chain cover.**
- **Do not start the engine for at least 2 hours after installation.**

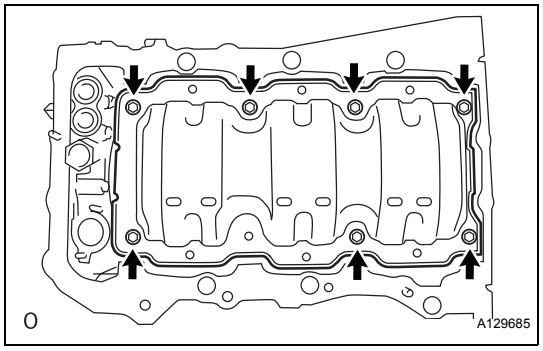

46. INSTALL OIL PAN BAFFLE PLATE

(a) Install the oil pan baffle plate with the 7 bolts.
Torque: 10 N*m (102 kgf*cm, 7 ft.*lbf)

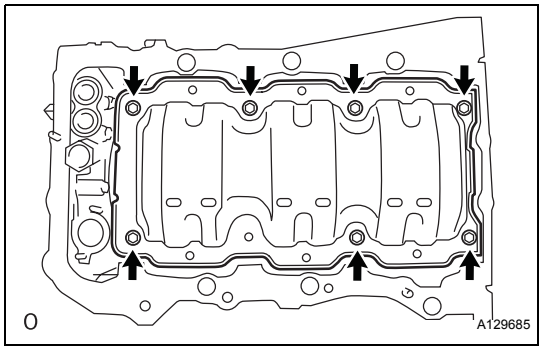

47. INSTALL OIL PAN SUB-ASSEMBLY

(a) Install the stud bolt.
(1) Using an E8 "torx" socket wrench, install the stud bolts as shown in the illustration.
Torque: 10 N*m (102 kgf*cm, 7 ft.*lbf)

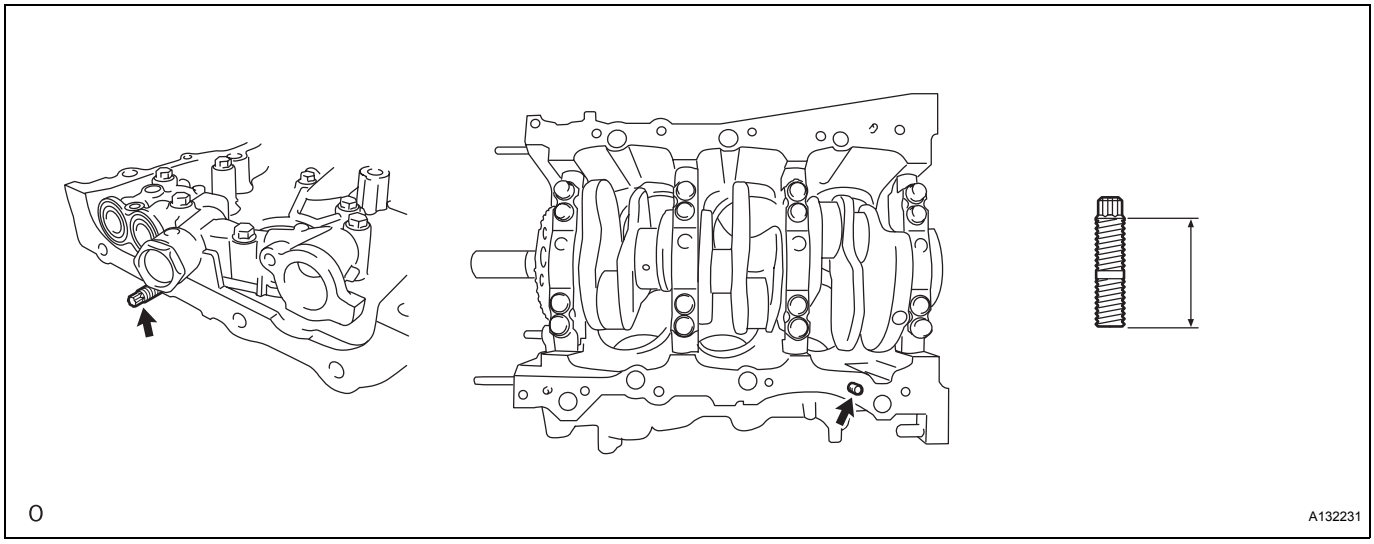

EM

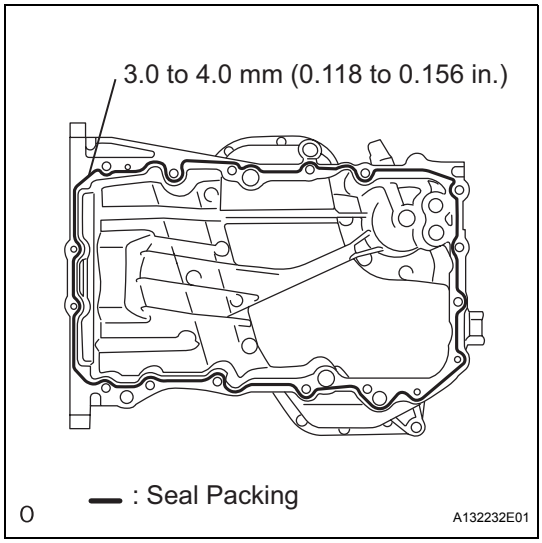

(b) Apply seal packing in a continuous bead as shown in the illustration.

Seal packing:
Part No. 08826-00080 or equivalent
Seal diameter:
3.0 to 4.0 mm (0.118 to 0.156 in.)
NOTICE:
- **Remove any oil from the contact surface.**
- **Install the crankcase within 3 minutes after applying seal packing.**
- **Do not start the engine for at least 2 hours after installation.**

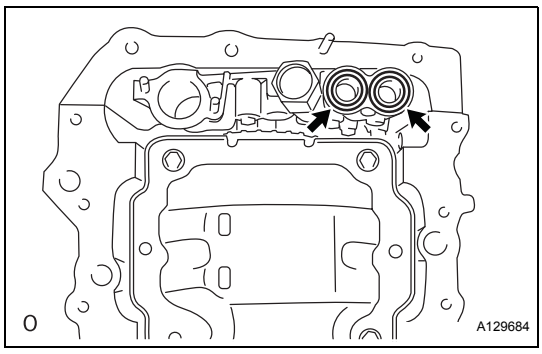

(c) Install 2 new O-rings.

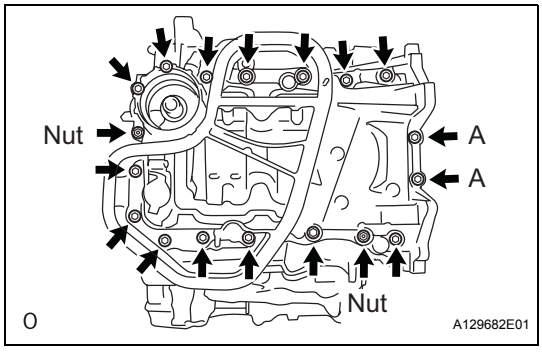

(d) Install the oil pan with the 16 bolts and 2 nuts.

Torque: Bolt A
10 N*m (102 kgf*cm, 7 ft.*lbf)
Bolts except A
21 N*m (214 kgf*cm, 15 ft.*lbf)

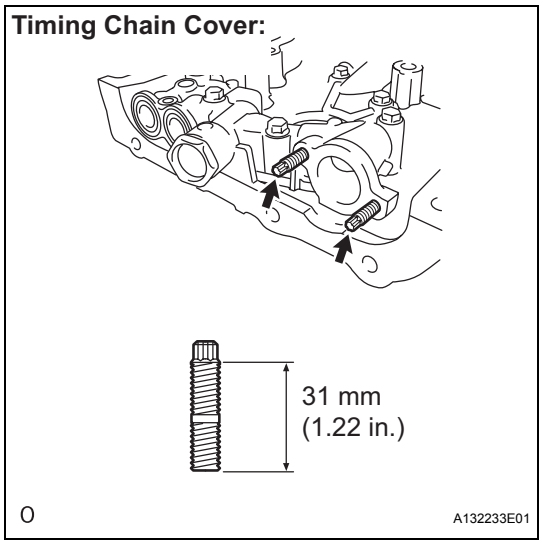

48. INSTALL OIL STRAINER SUB-ASSEMBLY

(a) Install the stud bolt.

(1) Using an E6 "torx" socket wrench, install the stud bolts as shown in the illustration.
Torque: 4.0 N*m (41 kgf*cm, 35 in.*lbf)

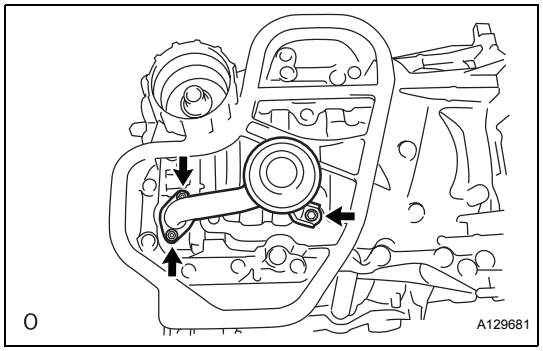

(b) Install a new gasket and the oil strainer with the bolt and 2 nuts.
Torque: 10 N*m (102 kgf*cm, 7 ft.*lbf)

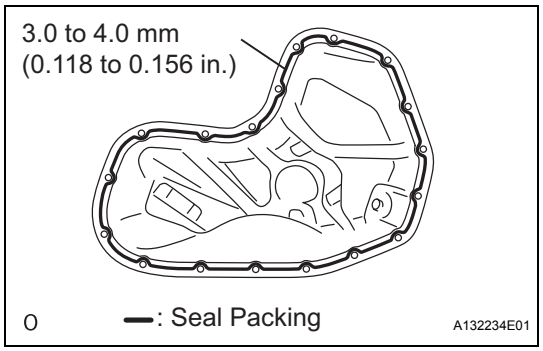

49. INSTALL OIL PAN SUB-ASSEMBLY NO.2

(a) Apply seal packing in a continuous bead as shown in the illustration.
Seal packing:
Part No. 08826-00080 or equivalent
Seal diameter:
3.0 to 4.0 mm (0.118 to 0.156 in.)
NOTICE:
- **Remove any oil from the contact surface.**
- **Install the crankcase within 3 minutes after applying seal packing.**
- **Do not start the engine for at least 2 hours after installation.**

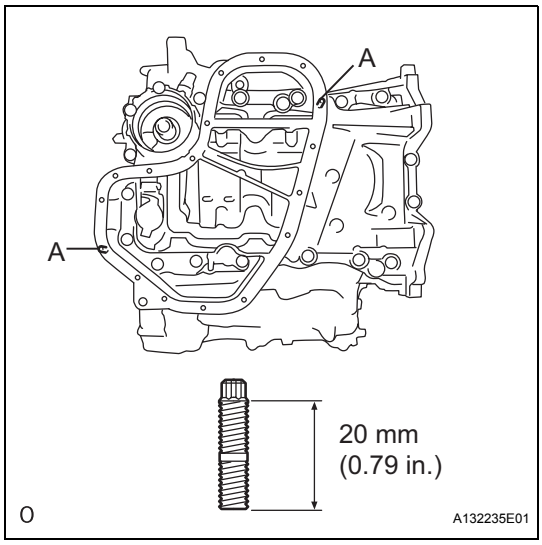

(b) Install the stud bolt.
(1) Using an E6 "torx" socket wrench, install the stud bolts as shown in the illustration.
Torque: 4.0 N*m (41 kgf*cm, 35 in.*lbf)

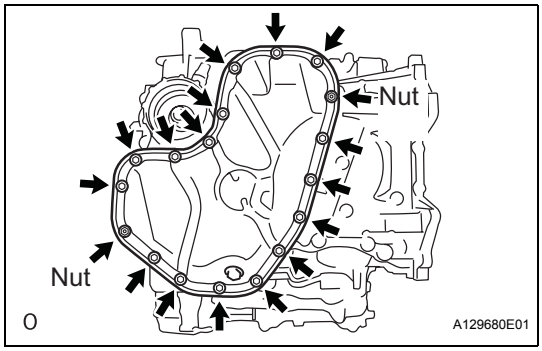

(c) Install the oil pan No. 2 with the 16 bolts and 2 nuts.
Torque: 10 N*m (102 kgf*cm, 7 ft.*lbf)

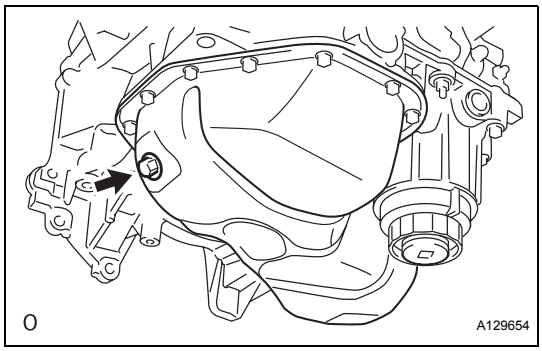

50. INSTALL OIL PAN DRAIN PLUG
(a) Install a new gasket and the drain plug.
Torque: 40 N*m (408 kgf*cm, 30 ft.*lbf)

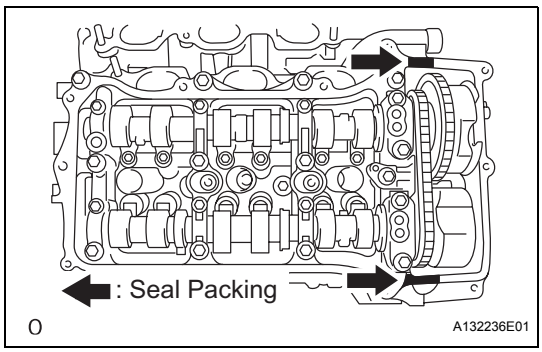

51. INSTALL CYLINDER HEAD COVER SUB-ASSEMBLY
(a) Apply seal packing as shown in the illustration.
Seal packing:
08826-00080 or equivalent
NOTICE:
- **Remove any oil from the contact surface.**
- **Install the crankcase within 3 minutes after applying seal packing.**
- **Do not start the engine for at least 2 hours after installation.**

(b) Install the gasket to the head cover.

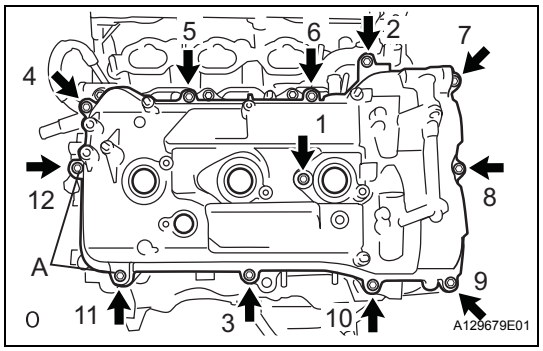

(c) Install the head cover with the 12 bolts.
Torque: Bolt A
21 N*m (214 kgf*cm, 15 ft.*lbf)
Bolts except A
10 N*m (102 kgf*cm, 7 ft.*lbf)
HINT:
Make sure the tightening torque of bolts 1.

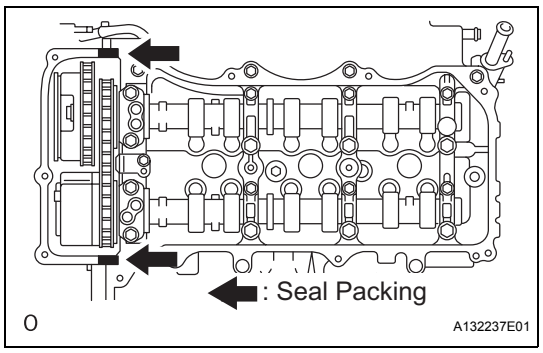

52. INSTALL CYLINDER HEAD COVER SUB-ASSEMBLY LH

(a) Apply seal packing as shown in the illustration.
Seal packing:
08826-00080 or equivalent
NOTICE:
- **Remove any oil from the contact surface.**
- **Install the crankcase within 3 minutes after applying seal packing.**
- **Do not start the engine for at least 2 hours after installation.**

(b) Install the gasket to the head cover.

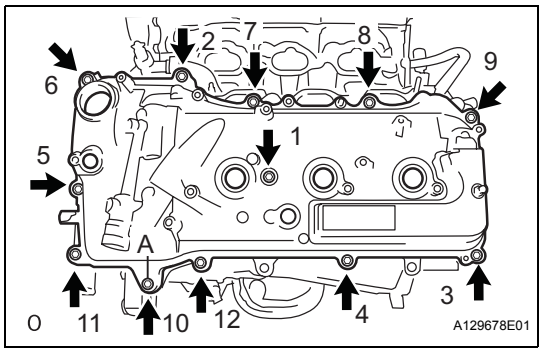

(c) Install the head cover with the 14 bolts.
Torque: Bolt A
21 N*m (214 kgf*cm, 15 ft.*lbf)
Bolts except A
10 N*m (102 kgf*cm, 7 ft.*lbf)
HINT:
Make sure the tightening torque of bolts 1 and 10.

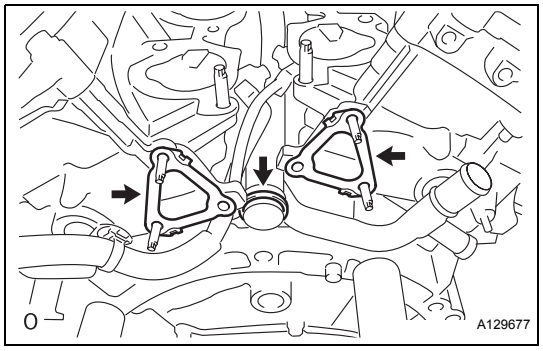

53. INSTALL WATER OUTLET

(a) Install 2 new gaskets and a new O-ring.
(b) Apply soapy water to the O-ring.

EM

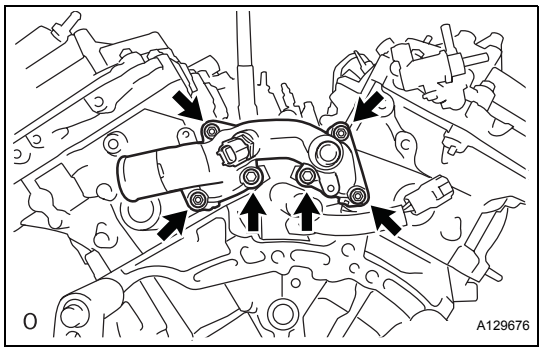

(c) Install the water outlet with the 2 bolts and 4 nuts.
Torque: Bolts
10 N*m (102 kgf*cm, 7 ft.*lbf)
Nuts
10 N*m (102 kgf*cm, 8 ft.*lbf)

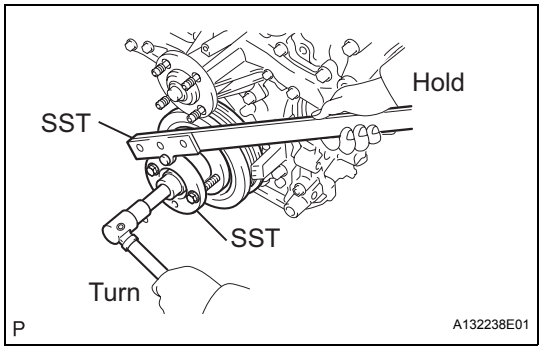

54. INSTALL CRANKSHAFT PULLEY

(a) Align the pulley set key with the key groove of the pulley, and slide on the pulley.
(b) Using SST, install the pulley bolt.
SST 09213-70011 (09213-70020), 09330-00021
Torque: 250 N*m (2,550 kgf*cm, 184 ft.*lbf)

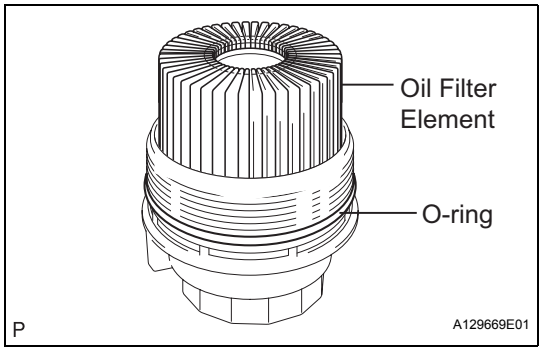

55. INSTALL OIL FILTER ELEMENT

(a) Clean the inside of the oil filter cap, the threads and O-ring groove.
(b) Apply a small amount of engine oil to a new O-ring and install it to the oil filter cap.
(c) Set a new oil filter element to the oil filter cap.
(d) Remove dirt or foreign matter from the installation surface and inside of the engine.
(e) Apply a small amount of engine oil to the O-ring again and install the oil filter cap.
NOTICE:
- **Be careful that the O-ring does not get caught between the parts.**
- **The O-ring must not be twisted on the groove.**

(f) Using SST, install the oil filter cap.
SST 09228-06501
Torque: 25 N*m (255 kgf*cm, 18 ft.*lbf)
NOTICE:
Make sure that the oil filter is installed securely as shown in the illustration.

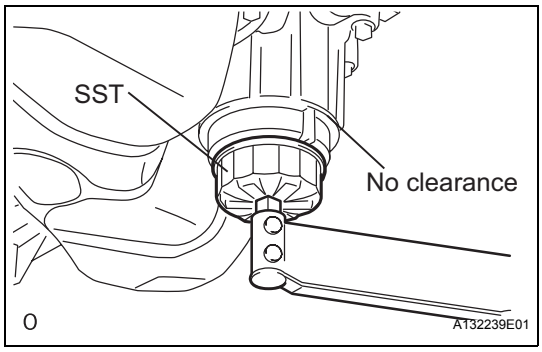

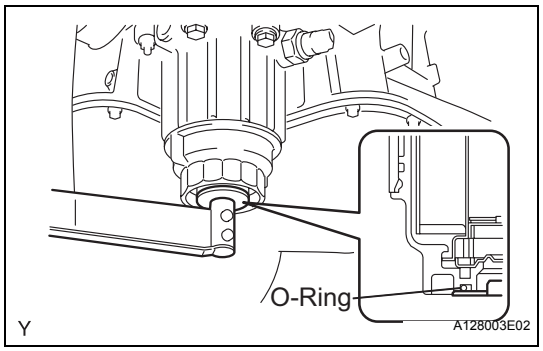

(g) Apply a light coat of engine oil to a new O-ring and install it to the oil filter cap.
NOTICE:
Remove all dirt and foreign matter from the installation surface.

(h) Install the oil filter drain plug to the oil filter cap.
Torque: 13 N*m (130 kgf*cm, 9 ft.*lbf)
NOTICE:
Make sure that the O-ring does not get caught between the parts.

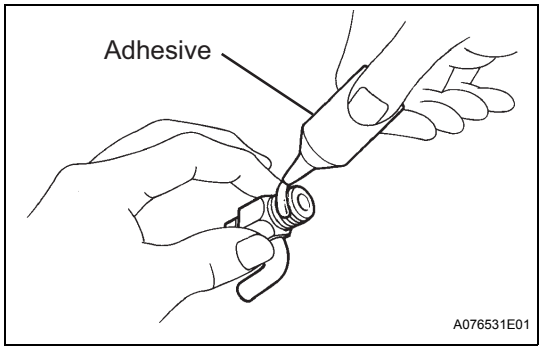

56. INSTALL CYLINDER BLOCK WATER DRAIN COCK SUB-ASSEMBLY

(a) Apply adhesive around the drain cocks.
Adhesive:
Part No. 08833-00070, THREE BOND 1324 or equivalent

EM

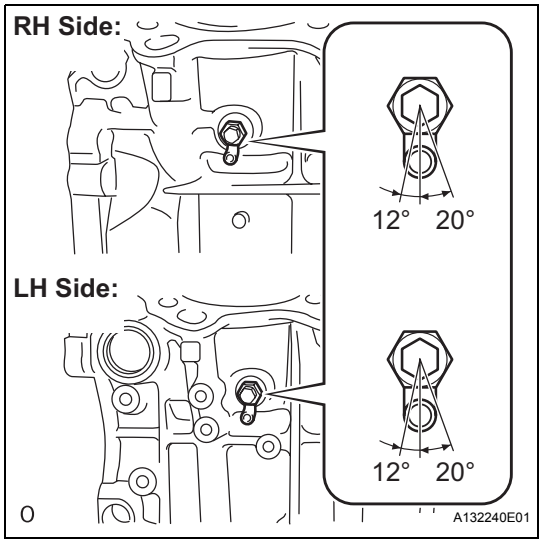

(b) Install the cylinder block water drain cocks as shown in the illustration.
Torque: 25 N*m (255 kgf*cm, 18 ft.*lbf)
NOTICE:
- **Do not rotate the drain cocks more than 1 revolution (360°) after tightening the drain cocks with the specified torque.**
- **Do not loosen the drain cocks after setting correctly.**

(c) Install the water drain cock plug to the water drain cocks.
Torque: 13 N*m (130 kgf*cm, 9 ft.*lbf)

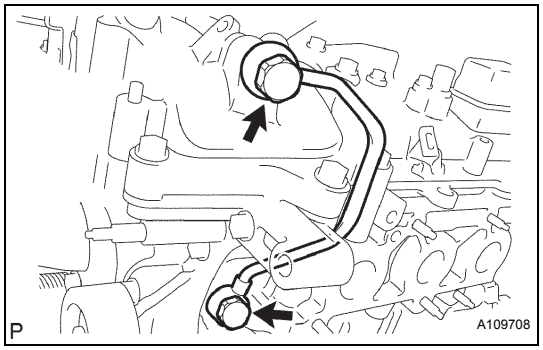

57. INSTALL OIL PIPE NO.1

(a) Make sure that there is no foreign matter on the mesh of the oil control valve filter LH.

(b) Install the oil control valve filter LH to the oil pipe union. Install 2 new gaskets and temporarily install oil pipe No. 1 (on the head cover side) with the oil pipe union.

(c) Install a new gasket and temporarily install oil pipe No. 1 (on the cylinder head side) with the oil pipe union.
NOTICE:
Remove any oil from the contract surface.

(d) Tighten the oil pipe union (on the head cover side).
Torque: 57 N*m (581 kgf*cm, 42 ft.*lbf)

(e) Tighten the oil check valve bolt (on the cylinder head side).
Torque: 57 N*m (581 kgf*cm, 42 ft.*lbf)

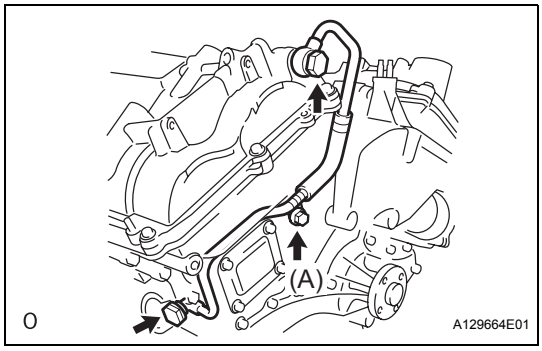

58. INSTALL OIL PIPE

(a) Make sure that there is no foreign matter on the mesh of the oil control valve filter RH.
(b) Install the oil control valve filter RH to the oil pipe union. Install 2 new gaskets and temporarily install oil pipe (on the head cover side) with the oil pipe union.
NOTICE:
Remove any oil from the contact surface.
(c) Install a new gasket and temporarily install oil pipe (on the cylinder head side) with the oil pipe union.
NOTICE:
Remove any oil from the contact surface.
(d) Install the bolt (A) to the cylinder head.
Torque: 10 N*m (102 kgf*cm, 7 ft.*lbf)
(e) Tighten the oil pipe union (on the head cover side).
Torque: 57 N*m (581 kgf*cm, 42 ft.*lbf)
(f) Tighten the oil pipe union (on the cylinder head side).
Torque: 57 N*m (581 kgf*cm, 42 ft.*lbf)

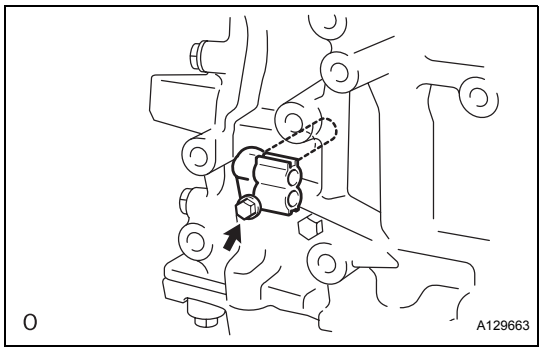

59. INSTALL CRANK POSITION SENSOR

(a) Install the crankshaft position sensor with the bolt.
Torque: 10 N*m (102 kgf*cm, 7 ft.*lbf)

EM

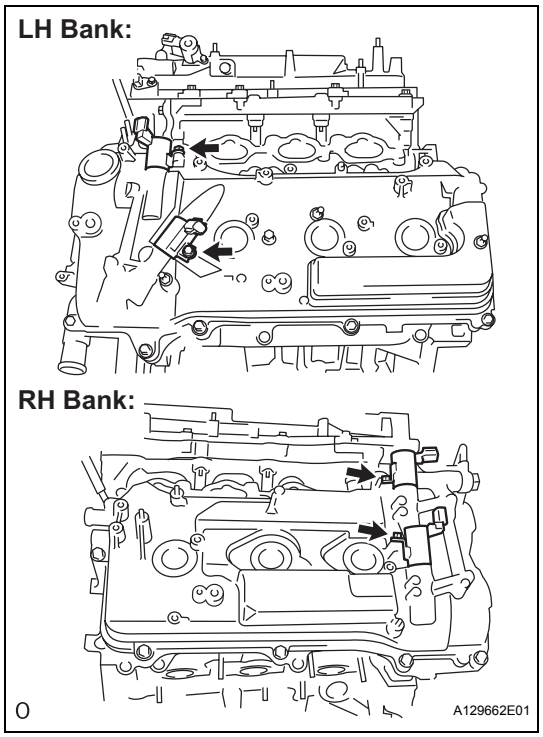

60. INSTALL CAMSHAFT TIMING OIL CONTROL VALVE ASSEMBLY

(a) Install the 4 camshaft timing oil control valves with the 4 bolts.
Torque: 10 N*m (102 kgf*cm, 7 ft.*lbf)

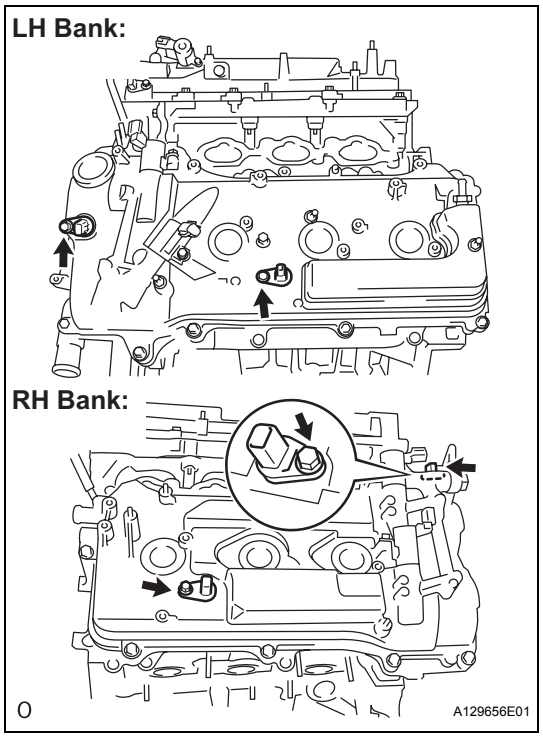

61. INSTALL CAMSHAFT POSITION SENSOR

(a) Install the 4 camshaft position sensors with the 4 bolts.
Torque: 10 N*m (102 kgf*cm, 7 ft.*lbf)

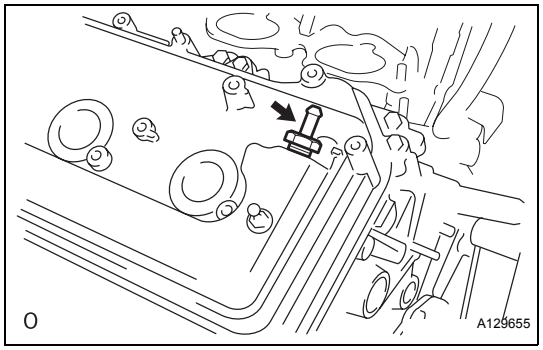

62. INSTALL VENTILATION VALVE SUB-ASSEMBLY

(a) Apply adhesive around the ventilation valve.
Adhesive:
Part No. 08833-00070, THREE BOND 1324 or equivalent

(b) Install the ventilation valve sub-assembly.
Torque: 27 N*m (275 kgf*cm, 20 ft.*lbf)

63. INSTALL SPARK PLUG

(a) Install the 6 spark plugs.
Torque: 18 N*m (184 kgf*cm, 13 ft.*lbf)

EM

64. INSTALL OIL FILTER CAP SUB-ASSEMBLY

(a) Install the oil filter cap sub-assembly.

EXHAUST PIPE

COMPONENTS

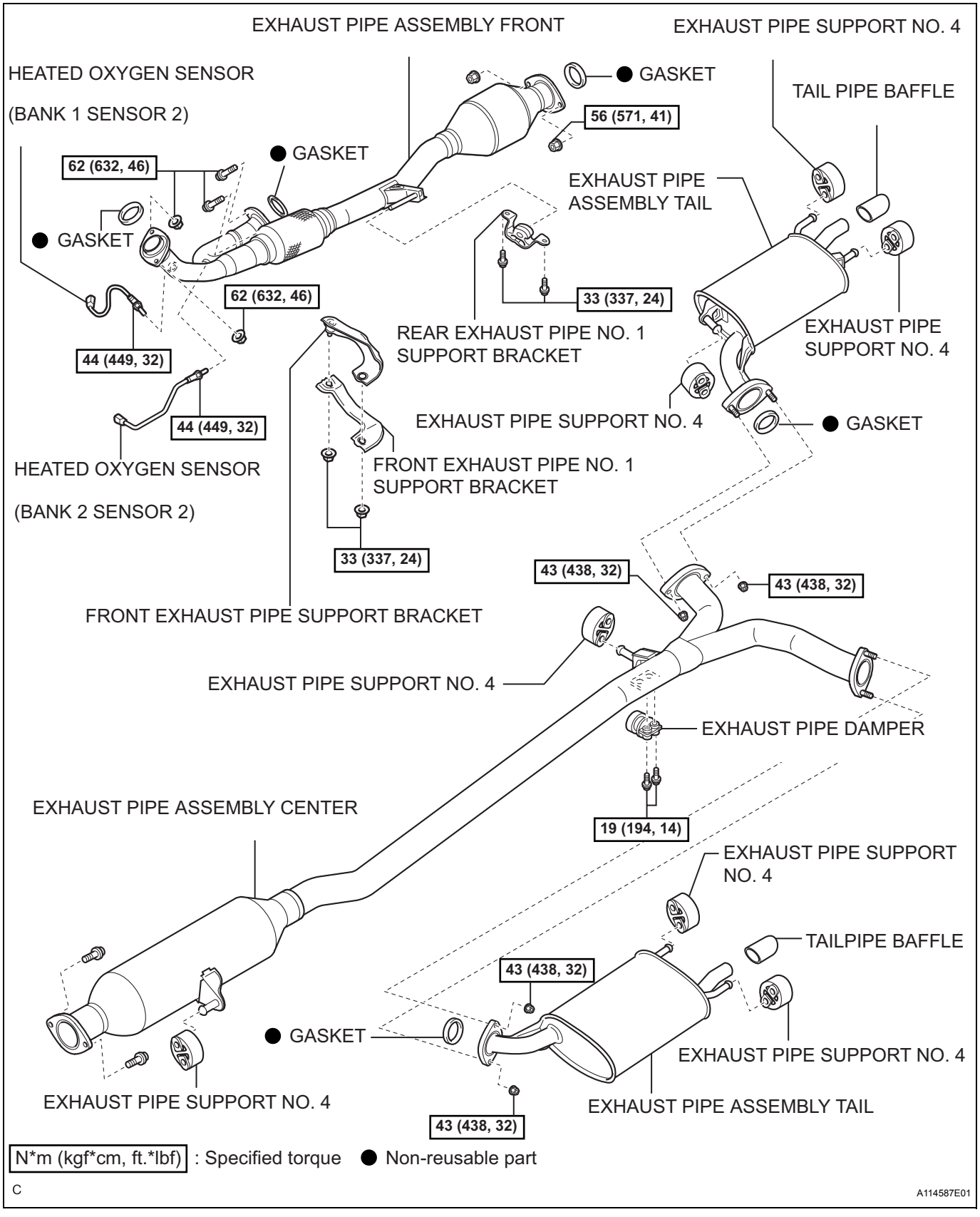

EX

REMOVAL

NOTICE:
Check if an old gasket still remains on the pipe. If so, remove it. Also, check if any bolts or nuts are rusted. If so, replace them.

1. **REMOVE HEATED OXYGEN SENSOR**
   (a) Disconnect the 2 heated oxygen sensor (bank 1, 2 sensor 2) connectors.
   (b) Remove the 2 heated oxygen sensors (bank 1, 2 sensor 2).
2. **REMOVE FRONT EXHAUST PIPE NO. 1 SUPPORT BRACKET**
   (a) Remove the 2 nuts and front support brackets.
3. **REMOVE REAR EXHAUST PIPE NO. 1 SUPPORT BRACKET**
   (a) Remove the 2 bolts and rear support bracket.
4. **REMOVE EXHAUST PIPE ASSEMBLY FRONT**
   (a) Remove the 2 nuts from the exhaust pipe front (left bank exhaust manifold side).
   (b) Remove the 2 bolts from the exhaust pipe front (right bank exhaust pipe manifold side). Then remove the exhaust pipe front.
   (c) Remove the 3 gaskets from the exhaust pipe front. (exhaust pipe center side). Then remove the exhaust pipe front.
   (d) Remove the 3 gaskets from the exhaust pipe front.

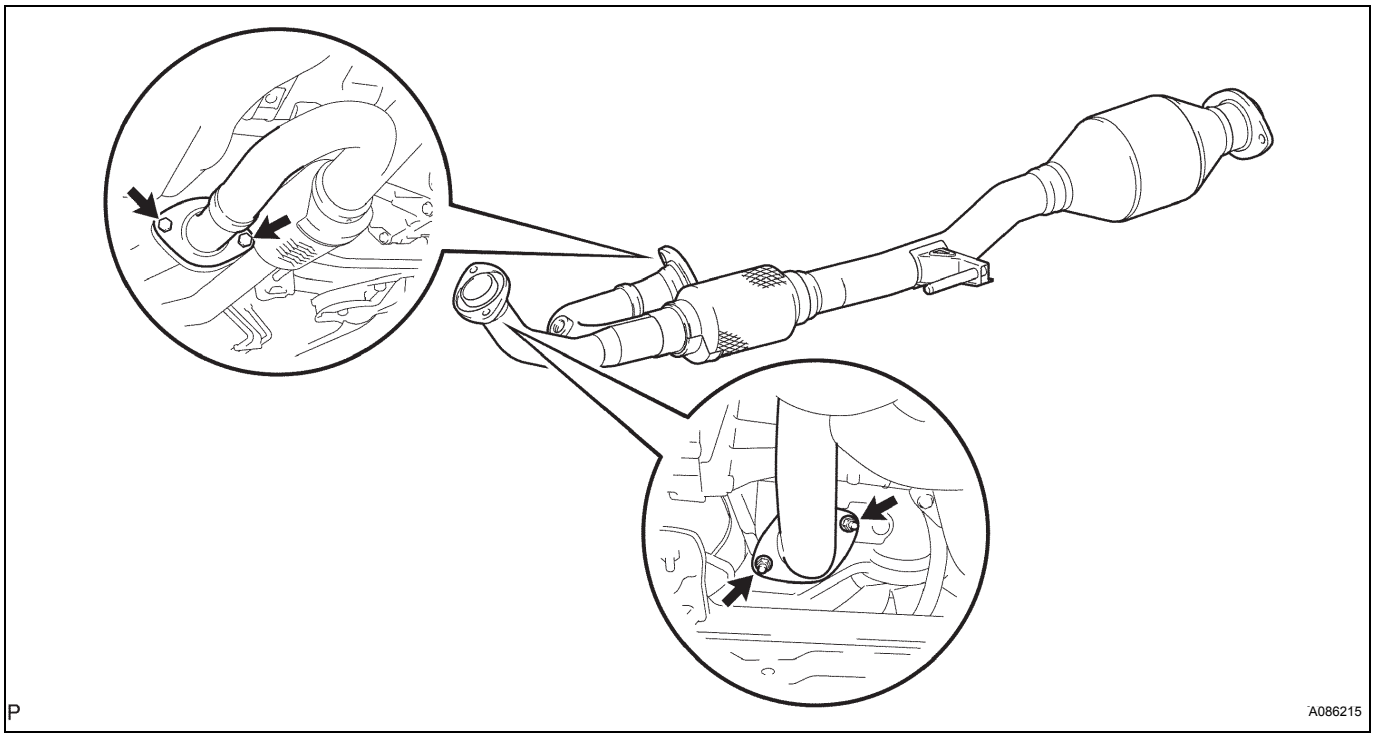

5. **REMOVE EXHAUST PIPE ASSEMBLY CENTER**
   (a) Remove the 4 nuts from the 2 exhaust pipe tails.
   (b) Disconnect the 2 exhaust pipe supports and remove the exhaust pipe center.

(c) Remove the 2 gaskets from the exhaust pipe center.
(d) Remove the 2 bolts from the exhaust pipe damper.

6. REMOVE EXHAUST PIPE ASSEMBLY TAIL

(a) Disconnect the 5 exhaust pipe supports and remove the 2 exhaust pipe tails.

7. REMOVE EXHAUST TAIL PIPE BAFFLE SUB ASSEMBLY

(a) Using a plastic hammer, tap out the baffles uniformly to remove them from each exhaust pipe tail.

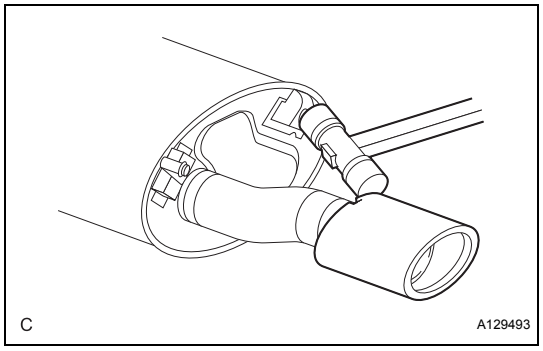

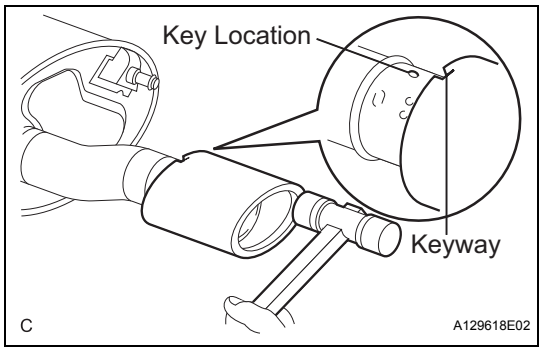

INSTALLATION

1. INSTALL EXHAUST TAIL PIPE BAFFLE SUB ASSEMBLY

(a) Align the groove on the exhaust tail pipe baffle with the projection on the exhaust pipe tail.

2. INSTALL EXHAUST PIPE ASSEMBLY TAIL

(a) Connect the 5 exhaust pipe supports and install the 2 exhaust pipe tails.

3. INSTALL EXHAUST PIPE ASSEMBLY CENTER

(a) Install the exhaust pipe damper to the exhaust pipe center with the 2 bolts.
Torque: 19 N*m (194 kgf*cm, 14 ft.*lbf)
(b) Install 2 new gaskets between the exhaust pipe center and exhaust pipe tails.
(c) Connect the 2 exhaust pipe supports and install the exhaust pipe center.
(d) Install the exhaust pipe center to the 2 exhaust pipe tails with the 4 nuts.
Torque: 43 N*m (438 kgf*cm, 32 ft.*lbf)

4. INSTALL EXHAUST PIPE ASSEMBLY FRONT

(a) Install 3 new gaskets to the exhaust pipe fronts.
(b) Install the exhaust pipe front to the exhaust manifolds with the 2 nuts and 2 bolts.
Torque: 62 N*m (632 kgf*cm, 46 ft.*lbf)
(c) Install the exhaust pipe front to the exhaust pipe center with the 2 nuts and 2 bolts.
Torque: 56 N*m (571 kgf*cm, 41 ft.*lbf)

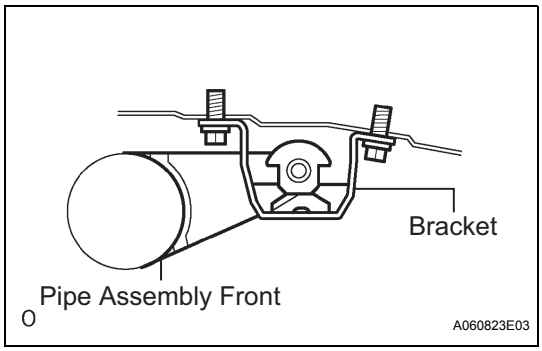

5. INSTALL REAR EXHAUST PIPE NO. 1 SUPPORT BRACKET

(a) Install the rear support bracket with the 2 bolts.
Torque: 33 N*m (337 kgf*cm, 24 ft.*lbf)
NOTICE:
Be sure to install the bracket in the correct direction.

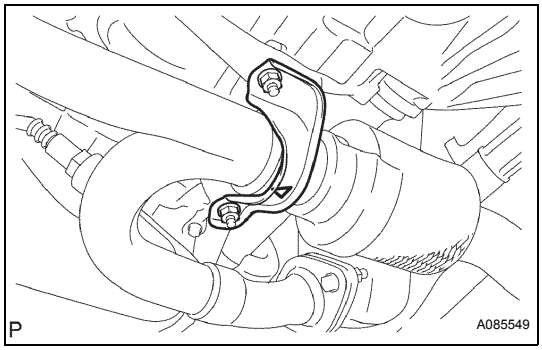

6. INSTALL FRONT EXHAUST PIPE NO. 1 SUPPORT BRACKET

(a) Install the front support brackets with the 2 nuts.
Torque: 33 N*m (337 kgf*cm, 24 ft.*lbf)
NOTICE:
Be sure to install the support bracket in the correct direction.

EX

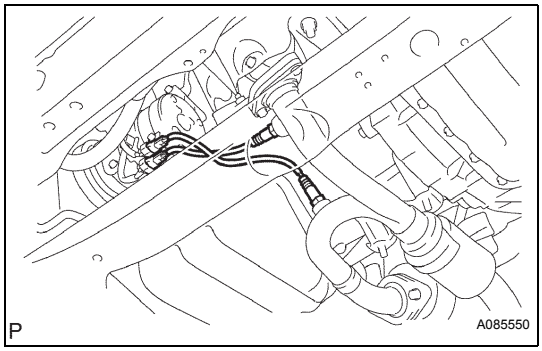

7. INSTALL HEATED OXYGEN SENSOR

(a) Install the 2 heated oxygen sensors (bank 1, 2 sensor 2).
Torque: 44 N*m (449 kgf*cm, 32 ft.*lbf)

(b) Connect the 2 heated oxygen sensor (bank 1, 2 sensor 2) connectors.

8. CHECK FOR EXHAUST GAS LEAKS

If gas is leaking, tighten the areas necessary to stop the leak. Replace damaged parts as necessary.

FRONT BUMPER

COMPONENTS

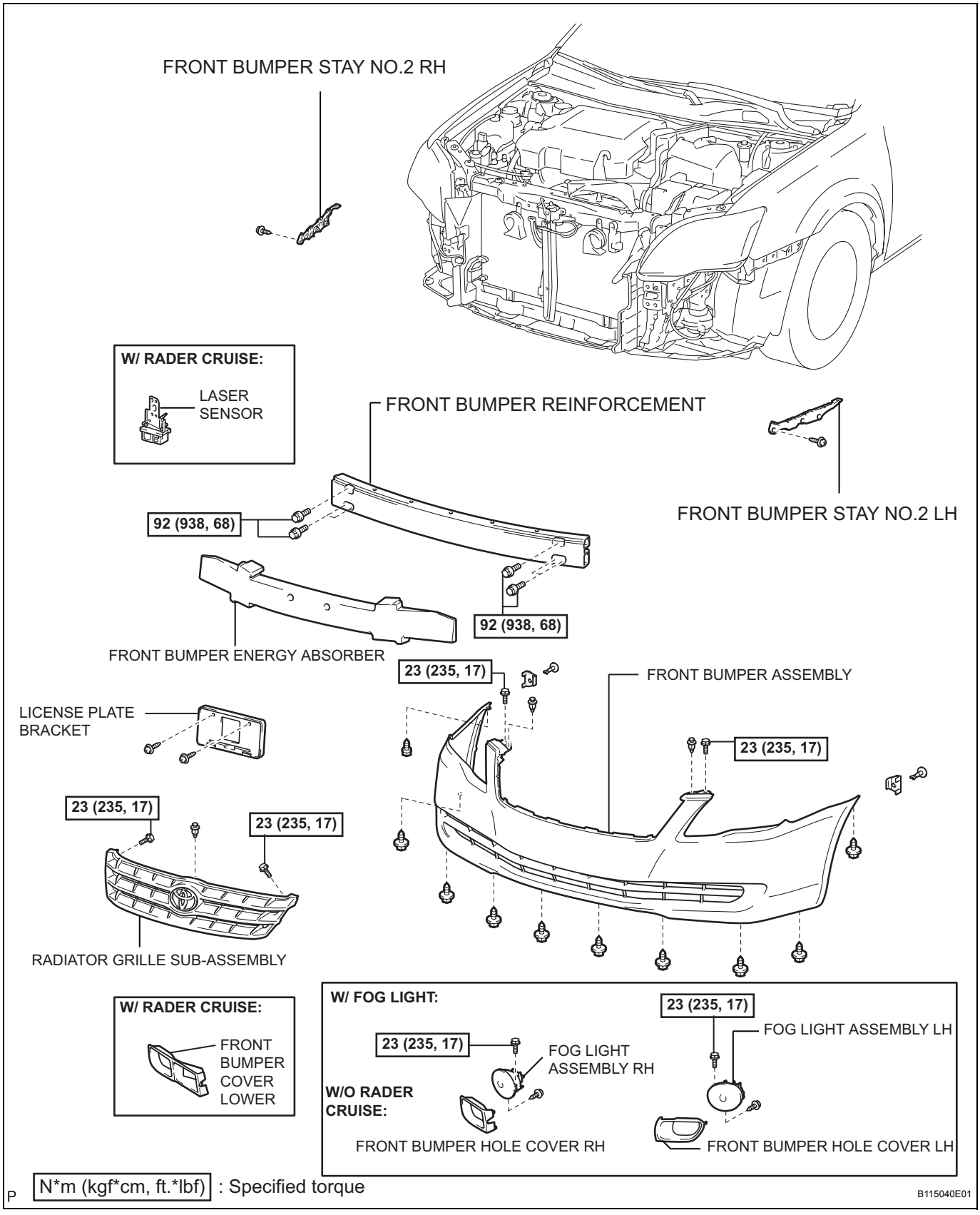

ET

REMOVAL

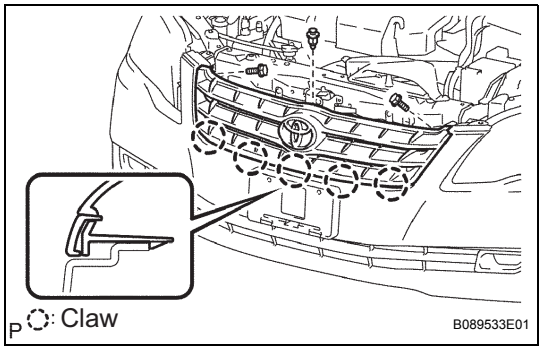

1. REMOVE RADIATOR GRILLE SUB-ASSEMBLY

(a) Remove the 2 bolts and clip.

(b) Disengage the 5 claws and remove the radiator grille sub-assembly.

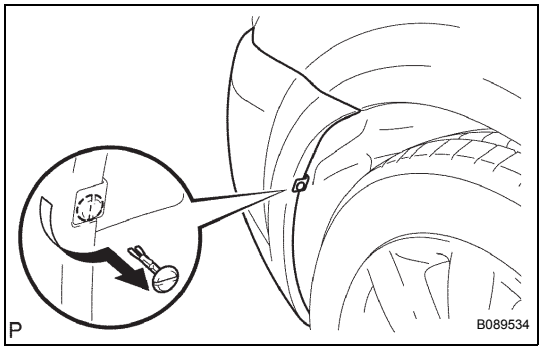

2. REMOVE FRONT BUMPER ASSEMBLY

(a) Turn the pin hold clip 90° as shown in the illustration and remove it. (LH side)
HINT:
Remove the RH side by following the same procedure as for the LH side.

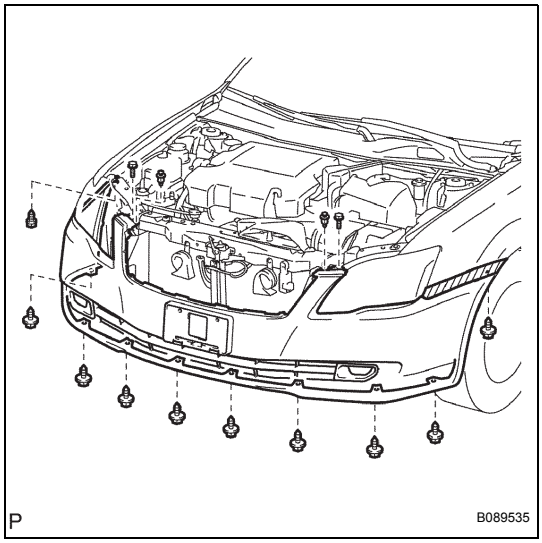

(b) Remove the 2 bolts, 10 screws and 2 clips.

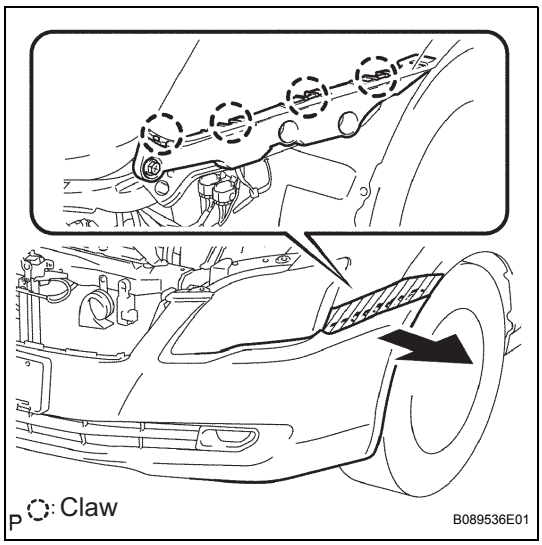

(c) Disengage the 4 claws by pulling the left side of the front bumper cover in the direction shown by the arrow. (LH side)
HINT:
Disengage the RH side by following the same procedure as for the LH side.

(d) Disconnect the fog light connector (w/ fog light) and remove the front bumper assembly.

ET

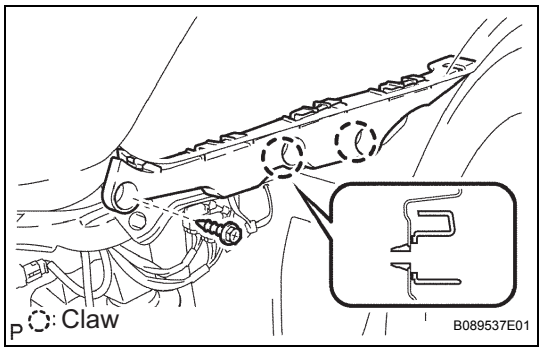

3. REMOVE FRONT BUMPER STAY NO.2 LH

(a) Remove the screw.

(b) Disengage the 2 claws and remove the front bumper stay No.2 LH.

4. REMOVE FRONT BUMPER STAY NO.2 RH

HINT:

Removal of the front bumper stay No.2 RH is the same as the front bumper stay No.2 LH.

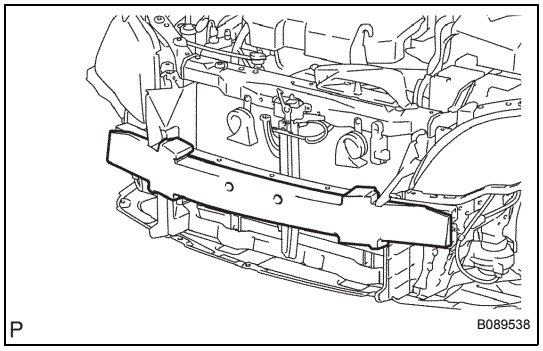

5. REMOVE FRONT BUMPER ENERGY ABSORBER

(a) Remove the front bumper energy absorber.

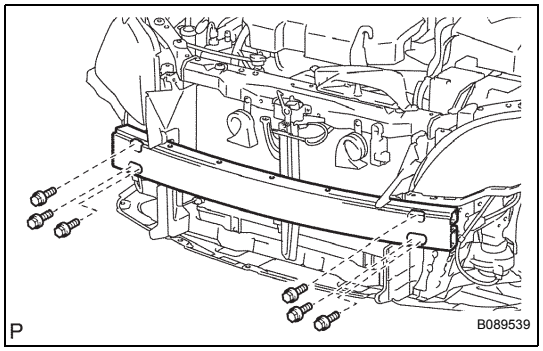

6. REMOVE FRONT BUMPER REINFORCEMENT

(a) Remove the 6 bolts and the front bumper reinforcement.

7. REMOVE LASER SENSOR (w/ Dynamic Radar Cruise Control System)

HINT:

See page CC-121

DISASSEMBLY

1. **REMOVE FOG LIGHT ASSEMBLY LH (w/ Fog Light)**
   HINT:
   See page LI-121
2. **REMOVE FOG LIGHT ASSEMBLY RH (w/ Fog Light)**
   HINT:
   See page LI-121
3. **REMOVE FRONT BUMPER HOLE COVER LH**
4. **REMOVE FRONT BUMPER HOLE COVER RH (w/o Dynamic Radar Cruise Control System)**
5. **REMOVE FRONT BUMPER COVER LOWER (w/ Dynamic Radar Cruise Control System)**

REASSEMBLY

1. **INSTALL FOG LIGHT ASSEMBLY RH (w/ Fog Light)**
   HINT:
   See page LI-124
2. **INSTALL FOG LIGHT ASSEMBLY LH (w/ Fog Light)**
   HINT:
   See page LI-124

INSTALLATION

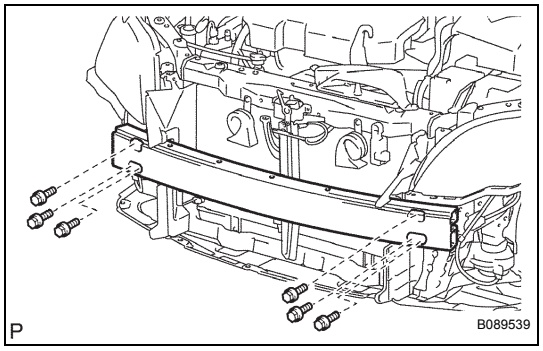

1. **INSTALL FRONT BUMPER REINFORCEMENT**
   (a) Install the front bumper reinforcement with the 6 bolts.
   Torque: 92 N*m (938 kgf*cm, 68 ft.*lbf)

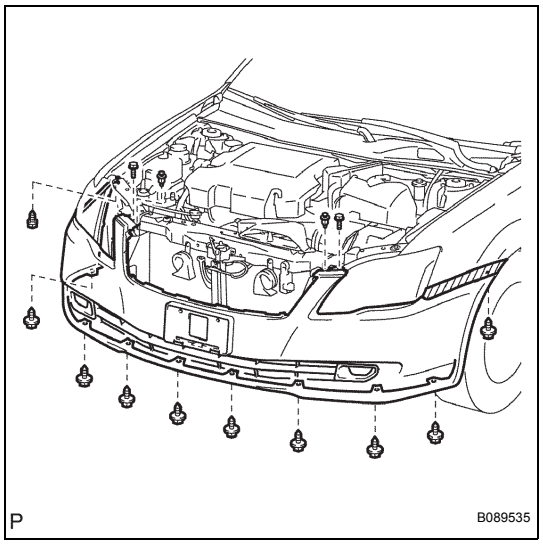

2. **INSTALL FRONT BUMPER ASSEMBLY**
   (a) Install the front bumper assembly with the 2 bolts, 10 screws and 2 clips.
   Torque: 23 N*m (235 kgf*cm, 17 ft.*lbf)

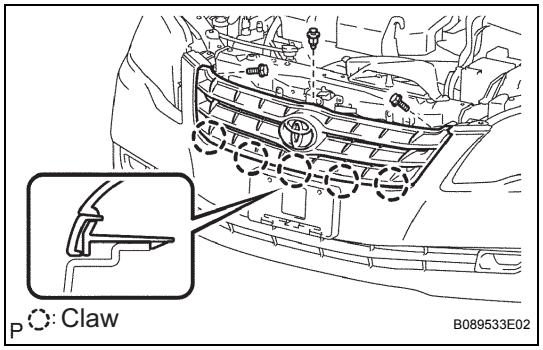

3. **INSTALL RADIATOR GRILLE SUB-ASSEMBLY**
   (a) Engage the 5 claws.
   (b) Install the radiator grille sub-assembly with the 2 bolts and clip.
   Torque: 23 N*m (235 kgf*cm, 17 ft.*lbf)
4. **VEHICLE PREPARATION FOR FOG LIGHT AIM ADJUSTMENT (See page LI-121)**
5. **PREPARATION FOR FOG LIGHT AIMING (See page LI-122)**
6. **FOG LIGHT AIMING INSPECTION (See page LI-123)**
7. **FOG LIGHT AIMING ADJUSTMENT (See page LI-124)**
8. **ADJUST LASER SENSOR**
   HINT:
   See page CC-121

REAR BUMPER

COMPONENTS

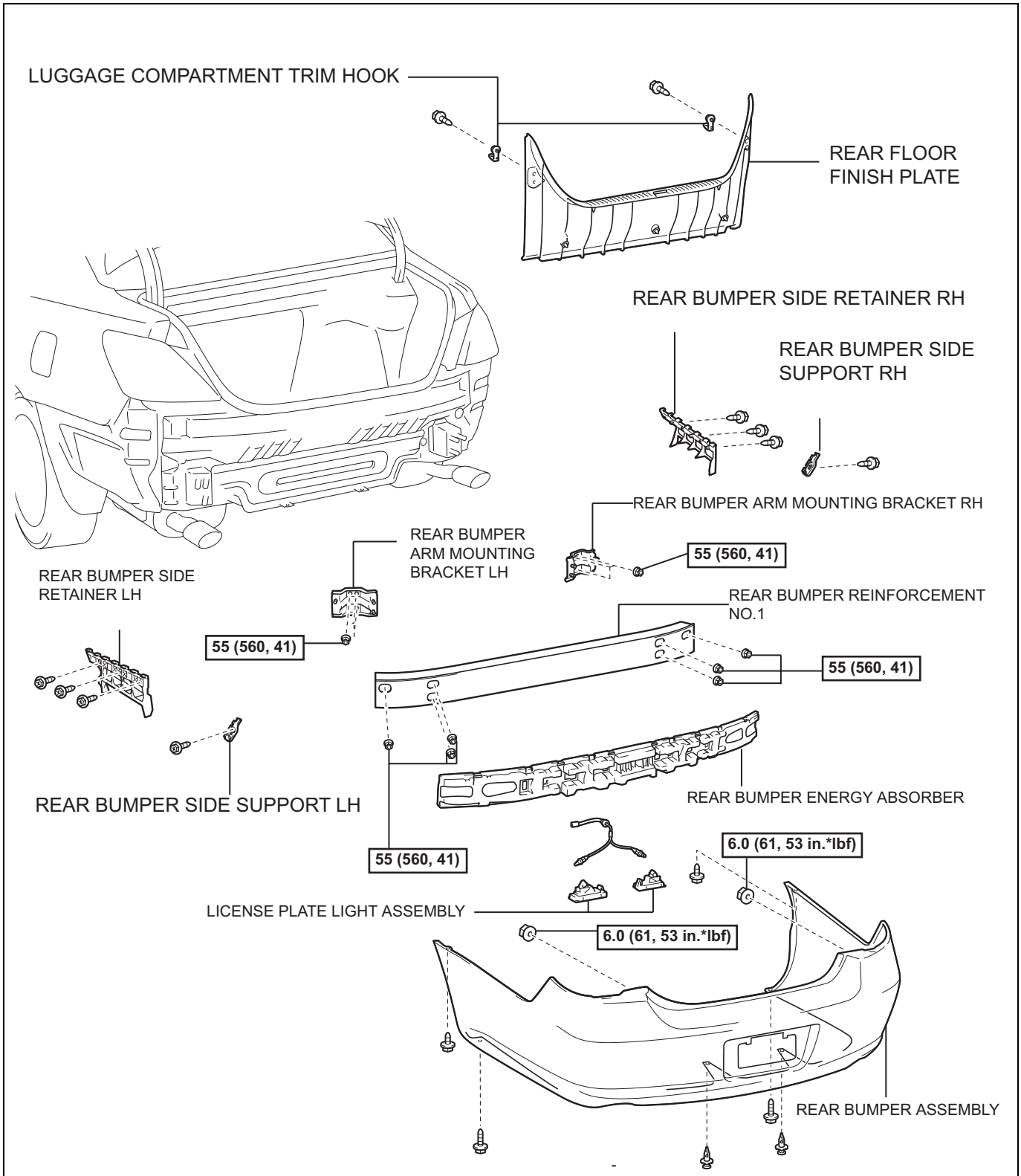

ET

REMOVAL

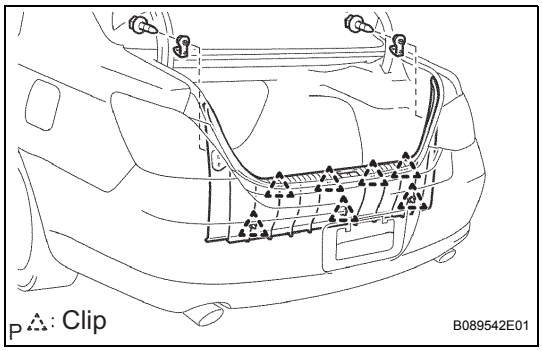

1. REMOVE REAR FLOOR FINISH PLATE

(a) Remove the 2 screws and the 2 luggage compartment trim hooks.

(b) Disengage the 7 clips and remove the rear floor finish plate.

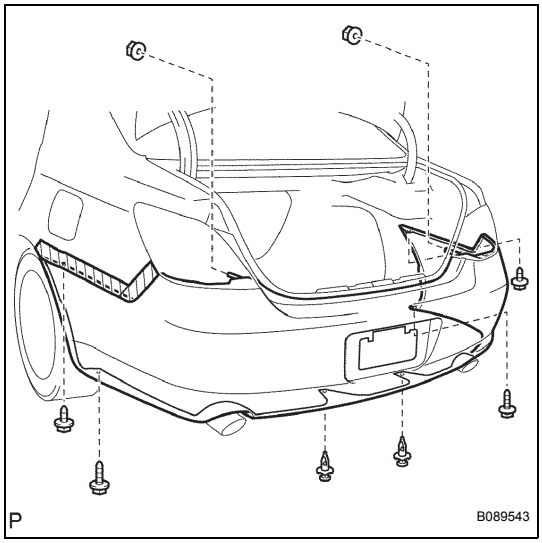

2. REMOVE REAR BUMPER ASSEMBLY

(a) Remove the 2 nuts, 4 screws and 2 clips.

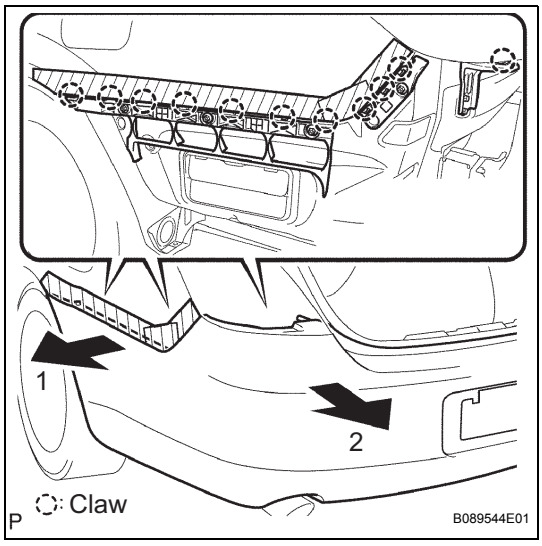

(b) Disengage the 11 claws by pulling the left side of the rear bumper cover in the direction shown by the arrows. (LH side)
HINT:
Disengage the RH side by following the same procedure as for the LH side.

(c) Disconnect the connector.

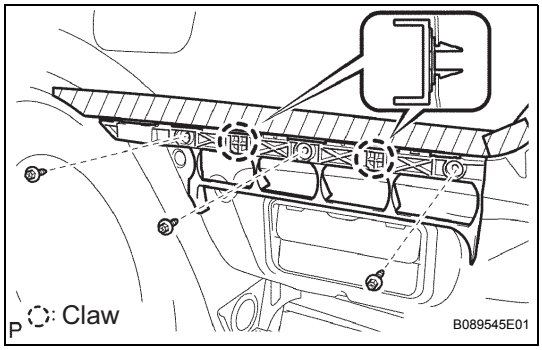

3. REMOVE REAR BUMPER SIDE RETAINER LH

(a) Remove the 3 screws.

(b) Disengage the 2 claws and remove the rear bumper side retainer LH.

4. REMOVE REAR BUMPER SIDE RETAINER RH

HINT:
Removal of the rear bumper side retainer RH is the same as the rear bumper side retainer LH.

ET

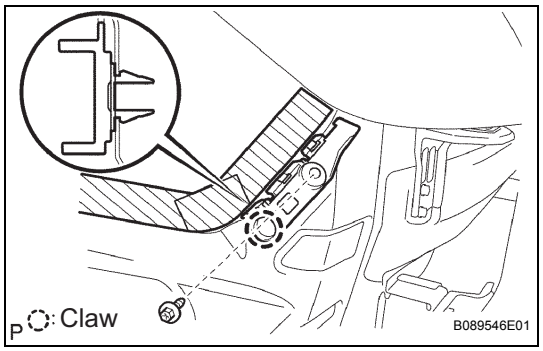

5. REMOVE REAR BUMPER SIDE SUPPORT LH

(a) Remove the screw.

(b) Disengage the claw and remove the rear bumper side support LH.

6. REMOVE REAR BUMPER SIDE SUPPORT RH

HINT:

Removal of the rear bumper side support RH is the same as the rear bumper side support LH.

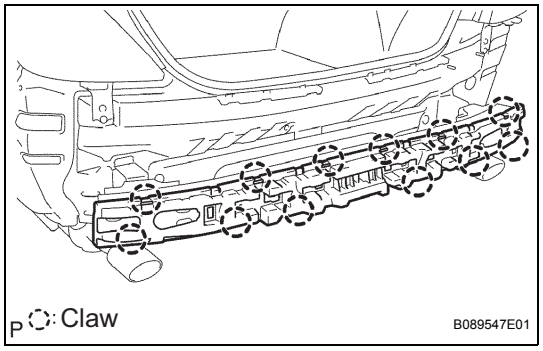

7. REMOVE REAR BUMPER ENERGY ABSORBER

(a) Disengage the 12 claws and remove the rear bumper energy absorber.

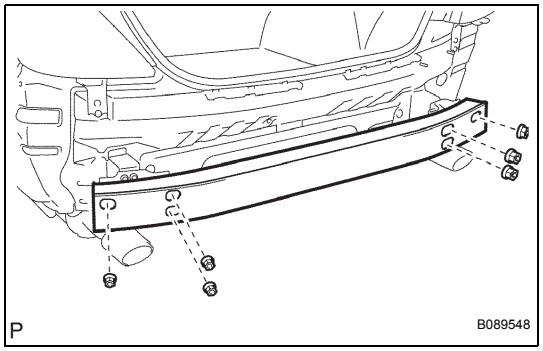

8. REMOVE REAR BUMPER REINFORCEMENT NO.1

(a) Remove the 6 nuts and the rear bumper reinforcement No.1.

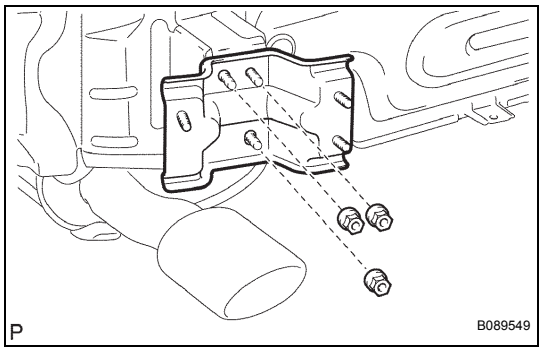

9. REMOVE REAR BUMPER ARM MOUNTING BRACKET LH

(a) Remove the 3 nuts and the rear bumper arm mounting bracket LH.

10. REMOVE REAR BUMPER ARM MOUNTING BRACKET RH

HINT:

Removal of the rear bumper arm mounting bracket RH is the same as the rear bumper arm mounting bracket LH.

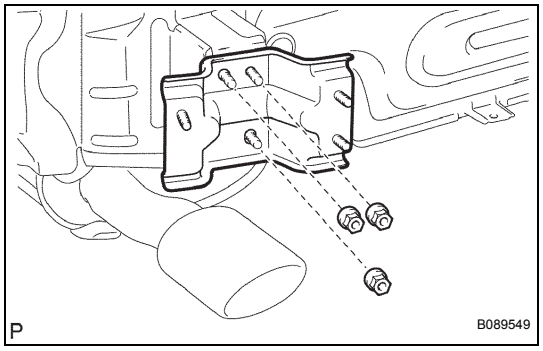

11. REMOVE LICENSE PLATE LIGHT ASSEMBLY

INSTALLATION

1. INSTALL REAR BUMPER ARM MOUNTING BRACKET LH

(a) Install the rear bumper arm mounting bracket LH with the 3 nuts.

Torque: 55 N*m (560 kgf*cm, 41 ft.*lbf)

ET

2. INSTALL REAR BUMPER ARM MOUNTING BRACKET RH

HINT:

Installation of the rear bumper arm mounting bracket RH is the same as the rear bumper arm mounting bracket LH.

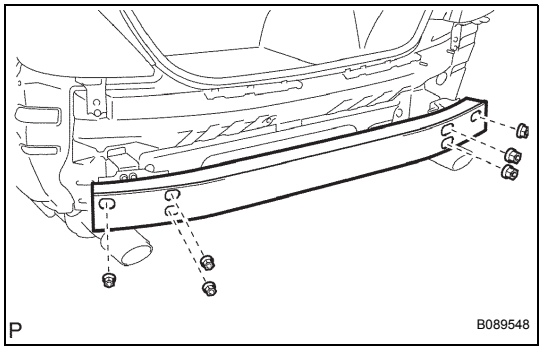

3. INSTALL REAR BUMPER REINFORCEMENT NO.1

(a) Install the rear bumper reinforcement No.1 with the 6 nuts.

Torque: 55 N*m (560 kgf*cm, 41 ft.*lbf)

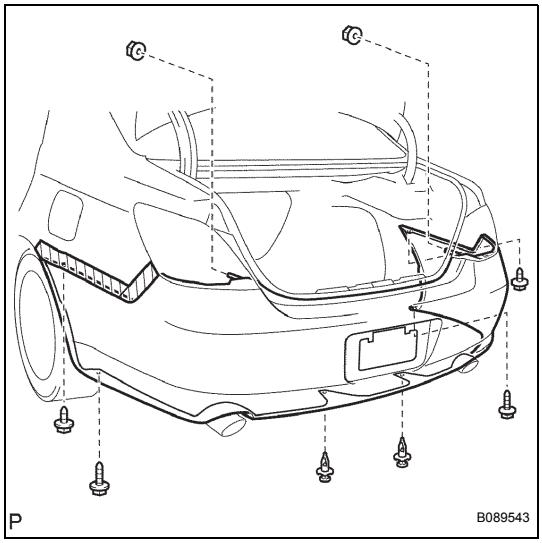

4. INSTALL REAR BUMPER ASSEMBLY

(a) Install the rear bumper assembly with the 2 nuts, 4 screws and 2 clips.

Torque: 6.0 N*m (61 kgf*cm, 53 in.*lbf)

NAME PLATE

COMPONENTS

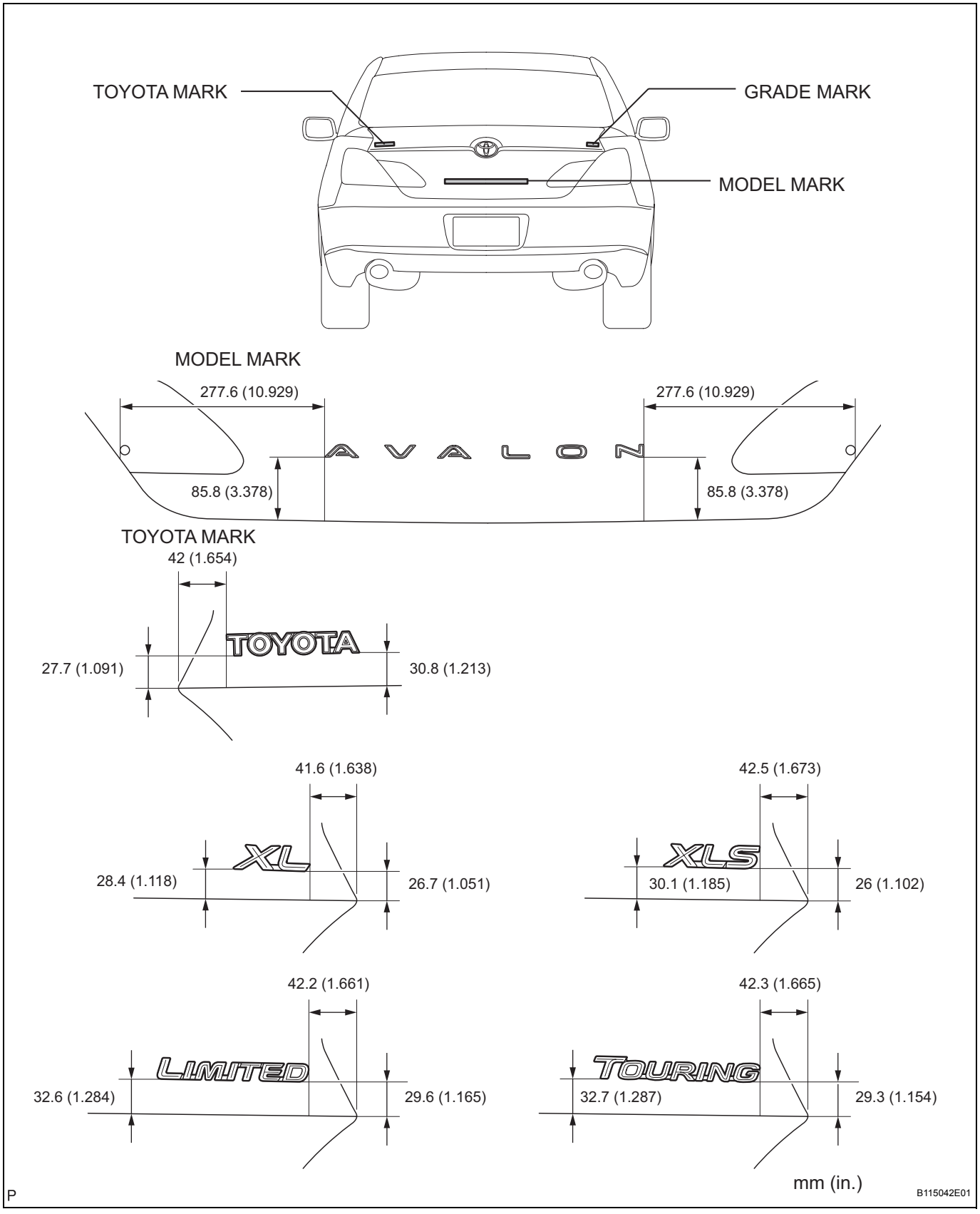

ET

ENGINE HOOD MOULDING

COMPONENTS

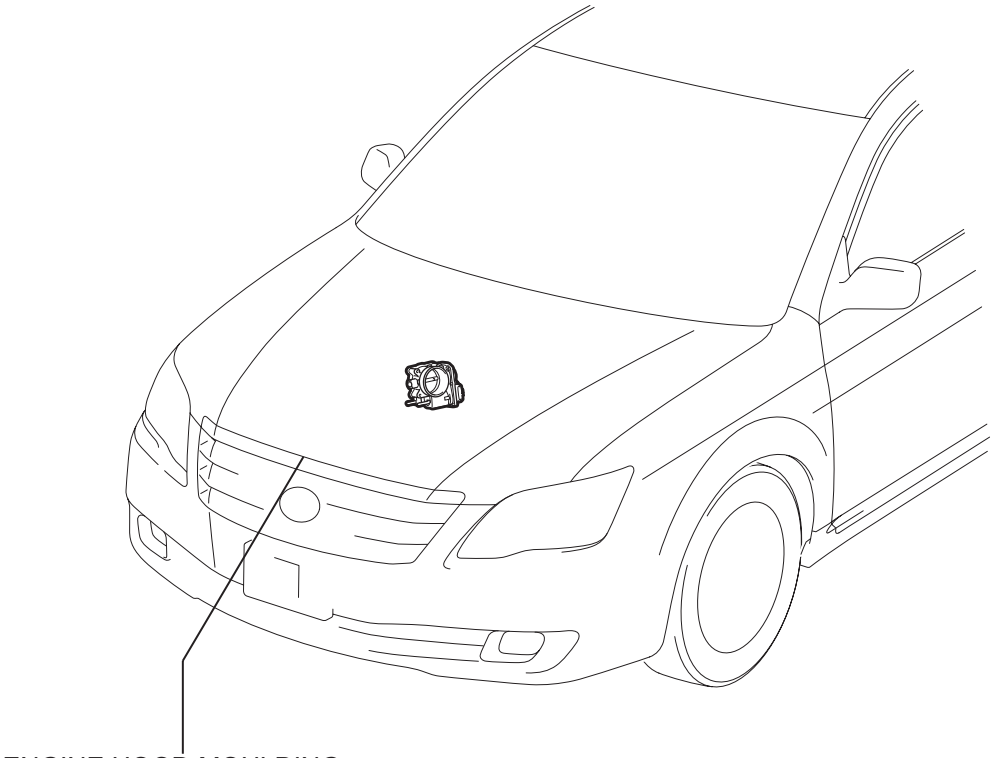

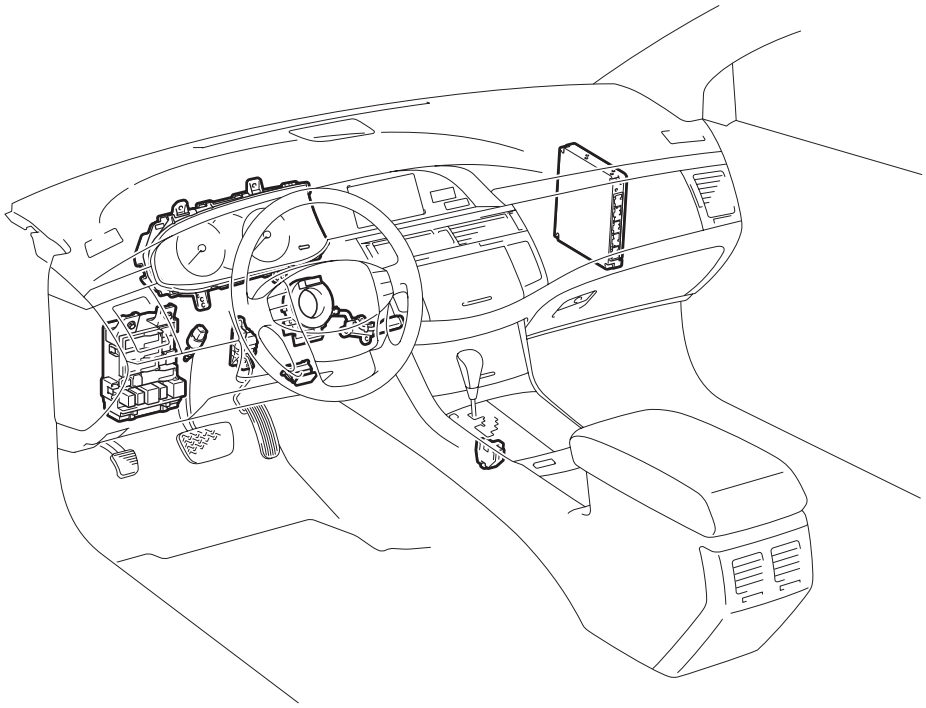

P

E112671E01

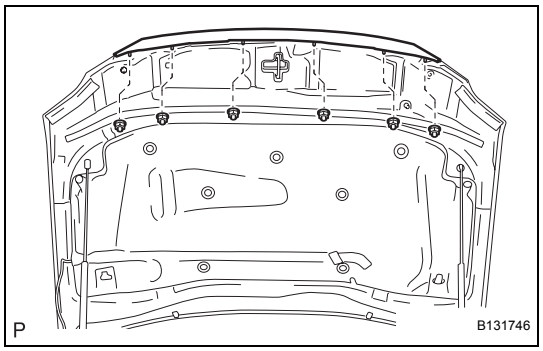

REMOVAL

1. REMOVE ENGINE HOOD MOULDING

(a) Remove the 6 nuts and the engine hood moulding.

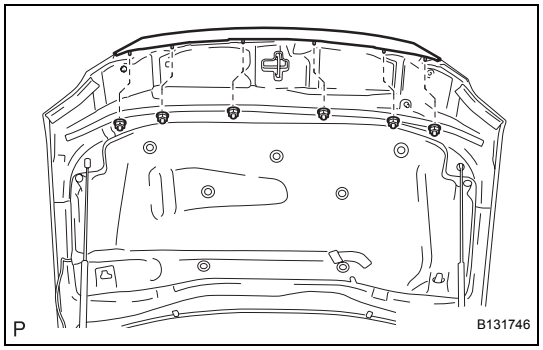

INSTALLATION

1. INSTALL ENGINE HOOD MOULDING

(a) Install the engine hood moulding with the 6 nuts.

ENGINE HOOD MOULDING

COMPONENTS

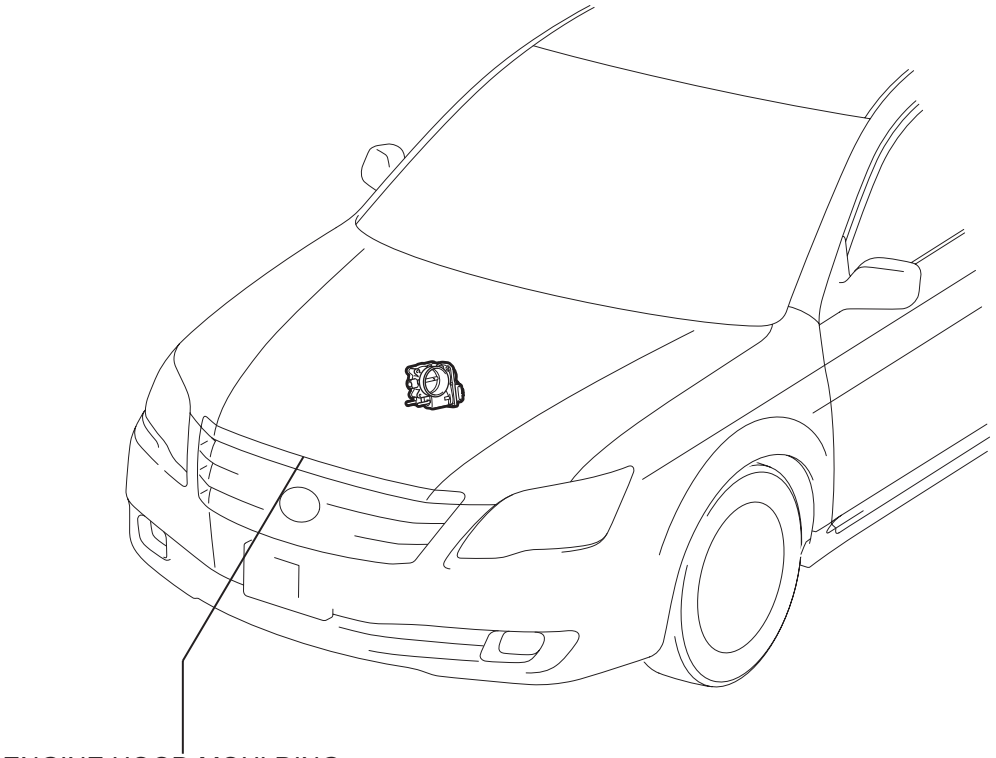

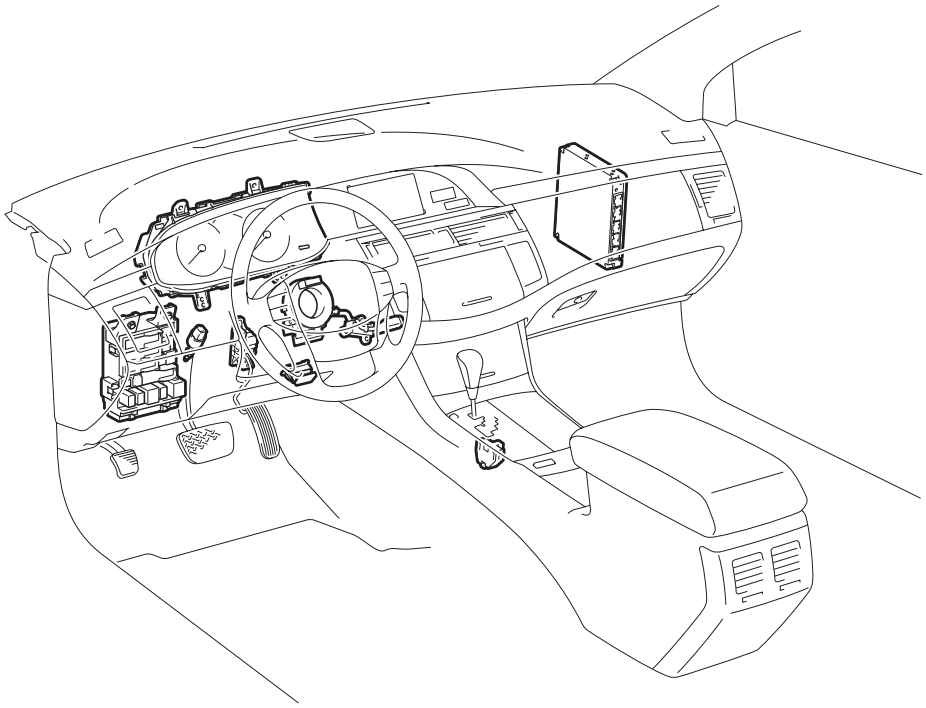

P

E112671E01

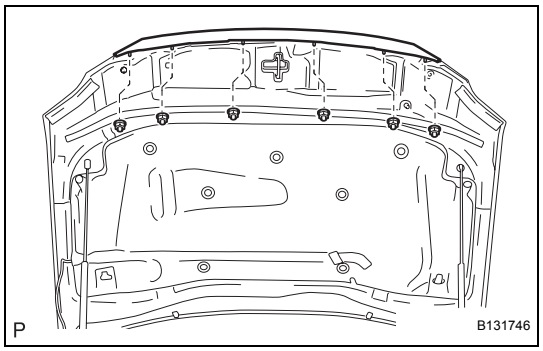

REMOVAL

1. REMOVE ENGINE HOOD MOULDING

(a) Remove the 6 nuts and the engine hood moulding.

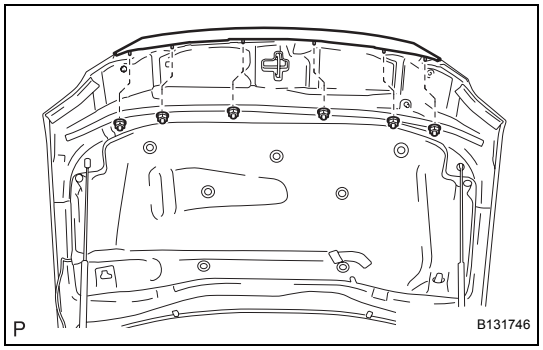

INSTALLATION

1. INSTALL ENGINE HOOD MOULDING

(a) Install the engine hood moulding with the 6 nuts.

FRONT DOOR BELT MOULDING

COMPONENTS

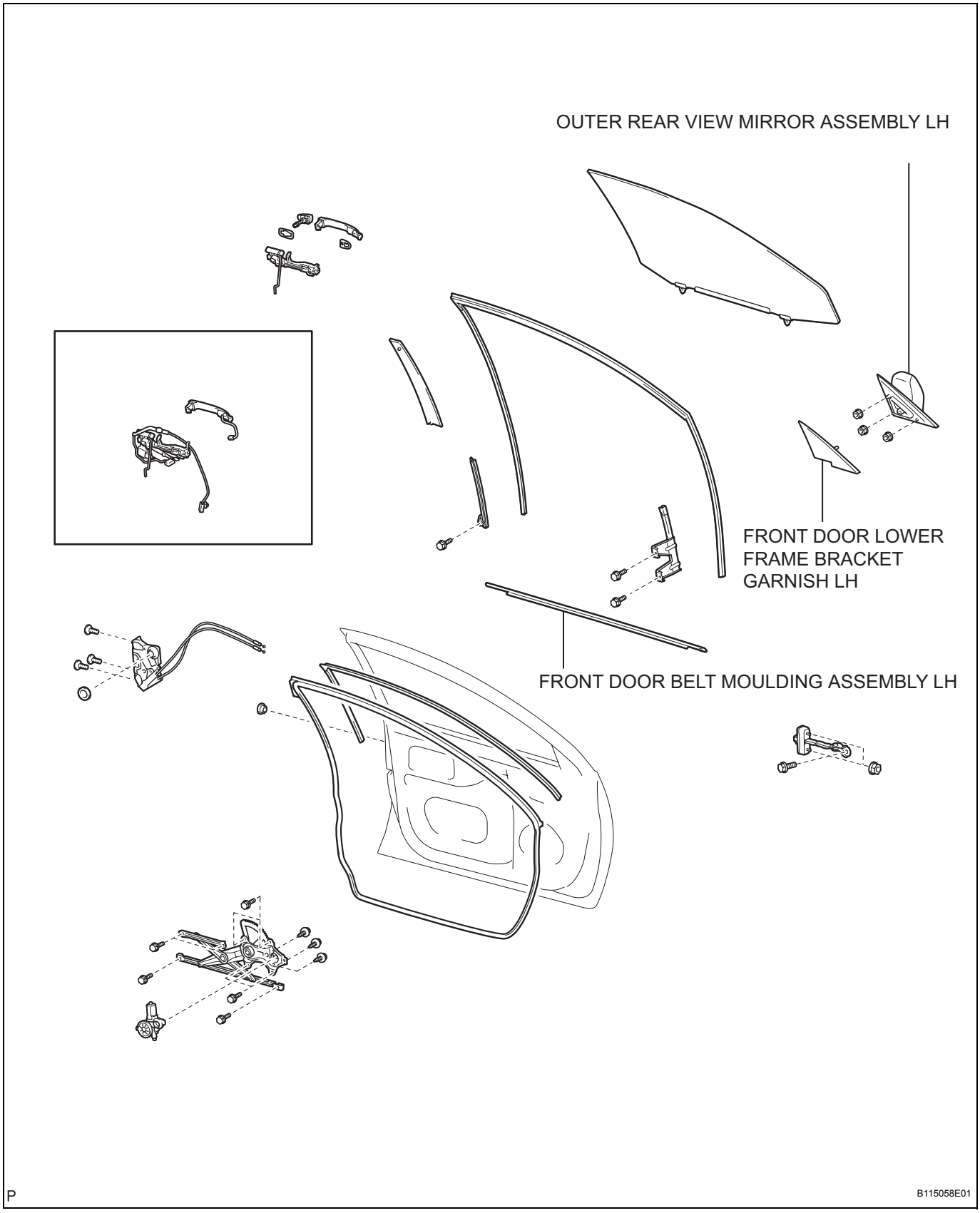

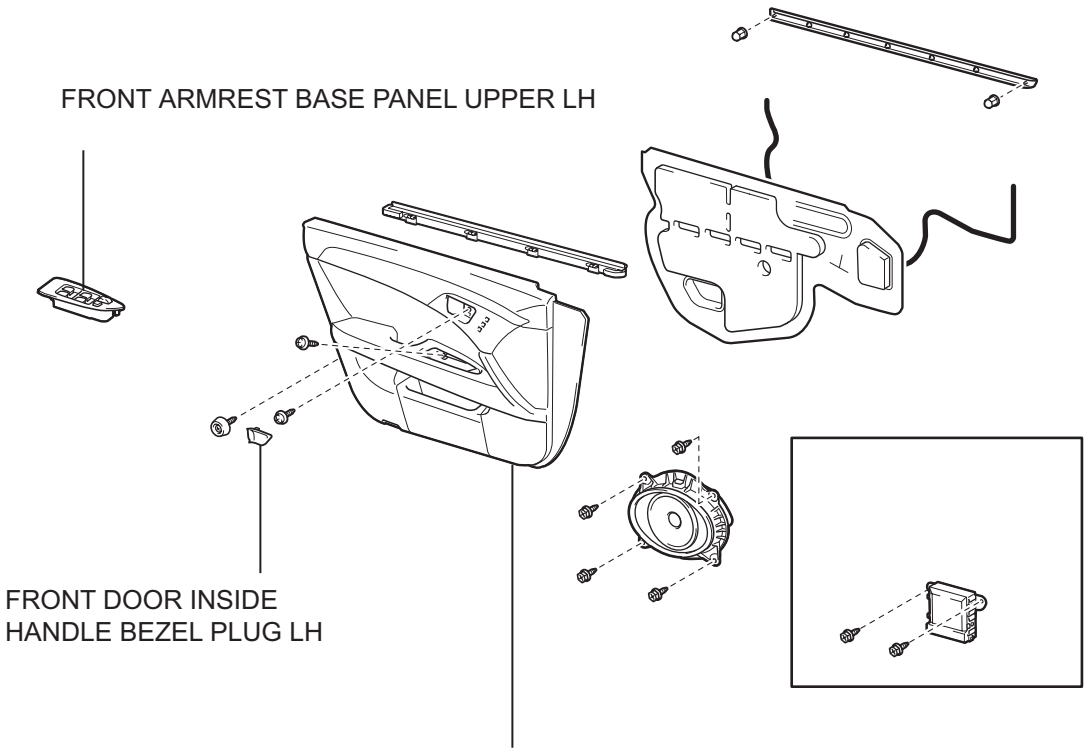

P

B115037E01

ET

REMOVAL

1. **REMOVE FRONT DOOR LOWER FRAME BRACKET GARNISH LH**
2. **REMOVE FRONT DOOR INSIDE HANDLE BEZEL PLUG LH**
3. **REMOVE FRONT ARMREST BASE PANEL UPPER LH**
4. **REMOVE FRONT DOOR TRIM BOARD SUB-ASSEMBLY LH**
5. **REMOVE OUTER REAR VIEW MIRROR ASSEMBLY LH**
   HINT:
   See page MI-37
6. **REMOVE FRONT DOOR BELT MOULDING ASSEMBLY LH**
   (a) Completely lower window glass.
   (b) Using a screwdriver with its tip taped, slide the 6 clips (A) along the front door belt moulding to disengage them from the door.
   (c) Rotated the front door belt moulding in the arrow direction to disengage the 2 clips (B).

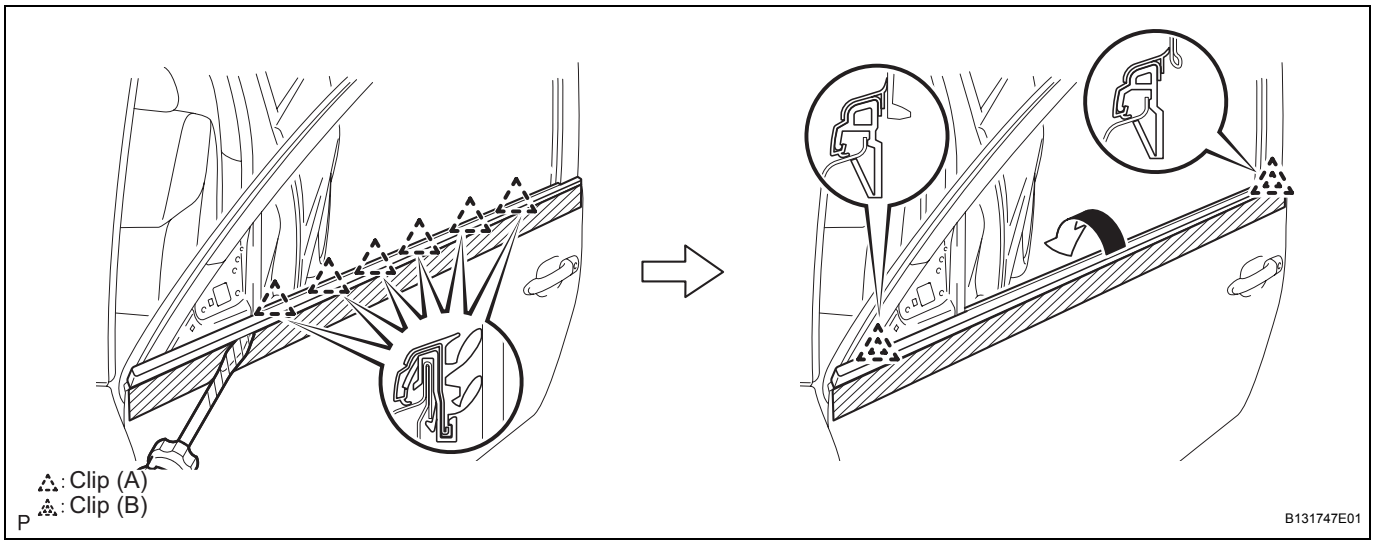

   (d) Remove the front door belt moulding assembly LH.
   NOTICE:
   When disengageing the clips (B), be careful not to break them because they are easy to break.

ET

INSTALLATION

1. **INSTALL FRONT DOOR BELT MOULDING ASSEMBLY LH**
   (a) If reusing the belt moulding:
   Put the clips (B) back to each mark on the belt moulding before installing it to the door.

2. **INSTALL OUTER REAR VIEW MIRROR ASSEMBLY LH**
   HINT:
   See page MI-39

REAR DOOR BELT MOULDING

COMPONENTS

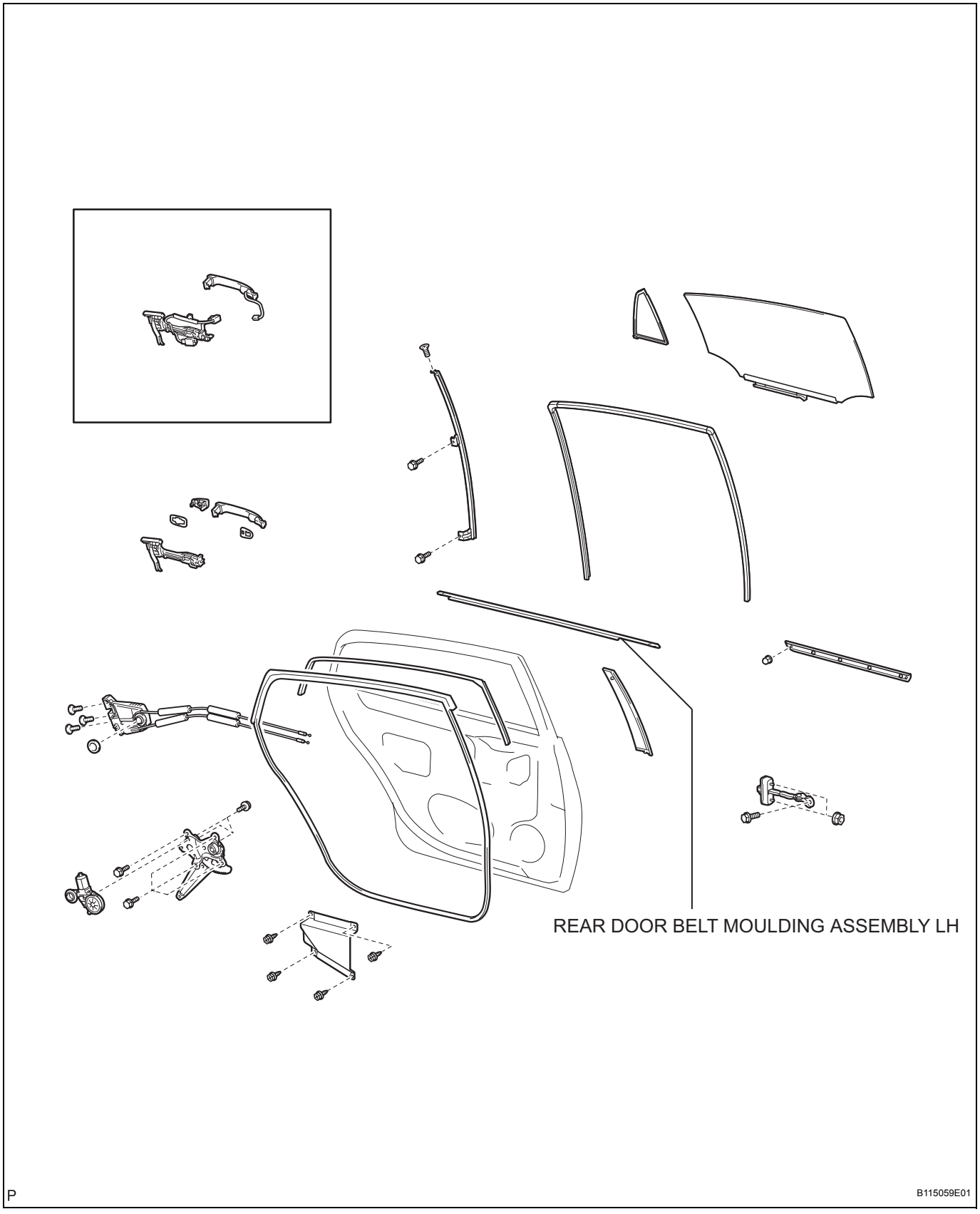

REMOVAL

1. REMOVE REAR DOOR BELT MOULDING ASSEMBLY LH

(a) Completely lower window glass.

(b) Using a screwdriver with its tip taped, slide the 6 clips (A) along the rear door belt moulding to disengage them from the door.

(c) Rotated the rear door belt moulding in the arrow direction to disengage the 2 clips (B).

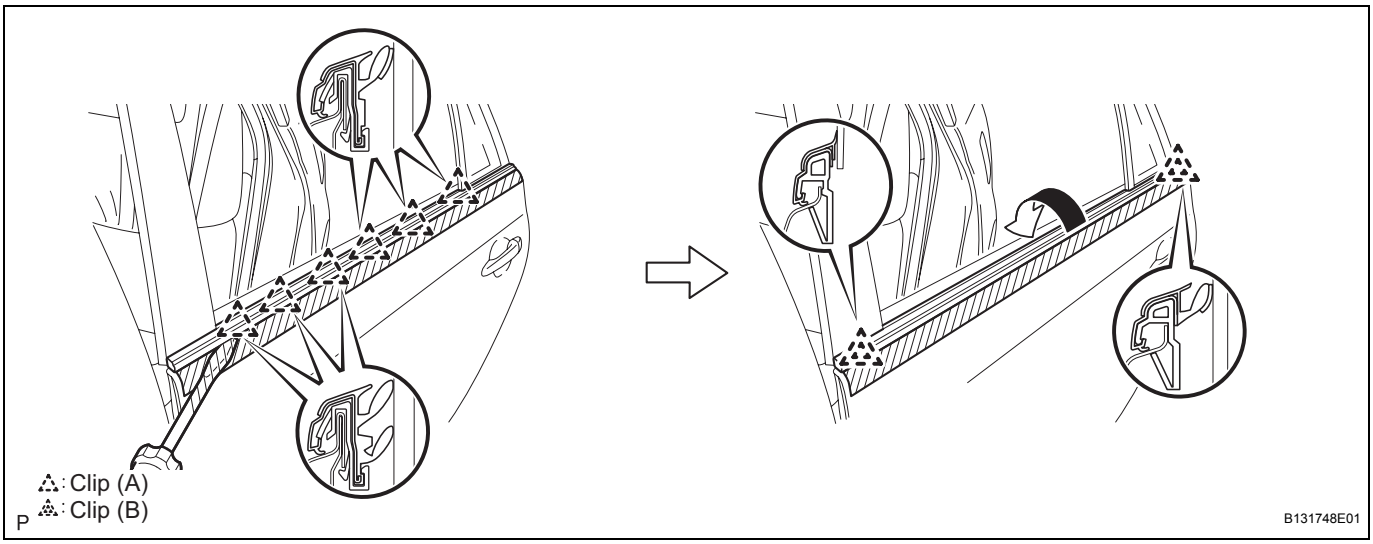

(d) Remove the rear door belt moulding assembly LH.

NOTICE:

When disengageing the clips (B), be careful not to break them because they are easy to break.

INSTALLATION

1. INSTALL REAR DOOR BELT MOULDING ASSEMBLY LH

(a) If reusing the belt moulding:
Put the clips (B) back to each mark on the belt moulding before installing it to the door.

ROOF DRIP SIDE FINISH MOULDING

COMPONENTS

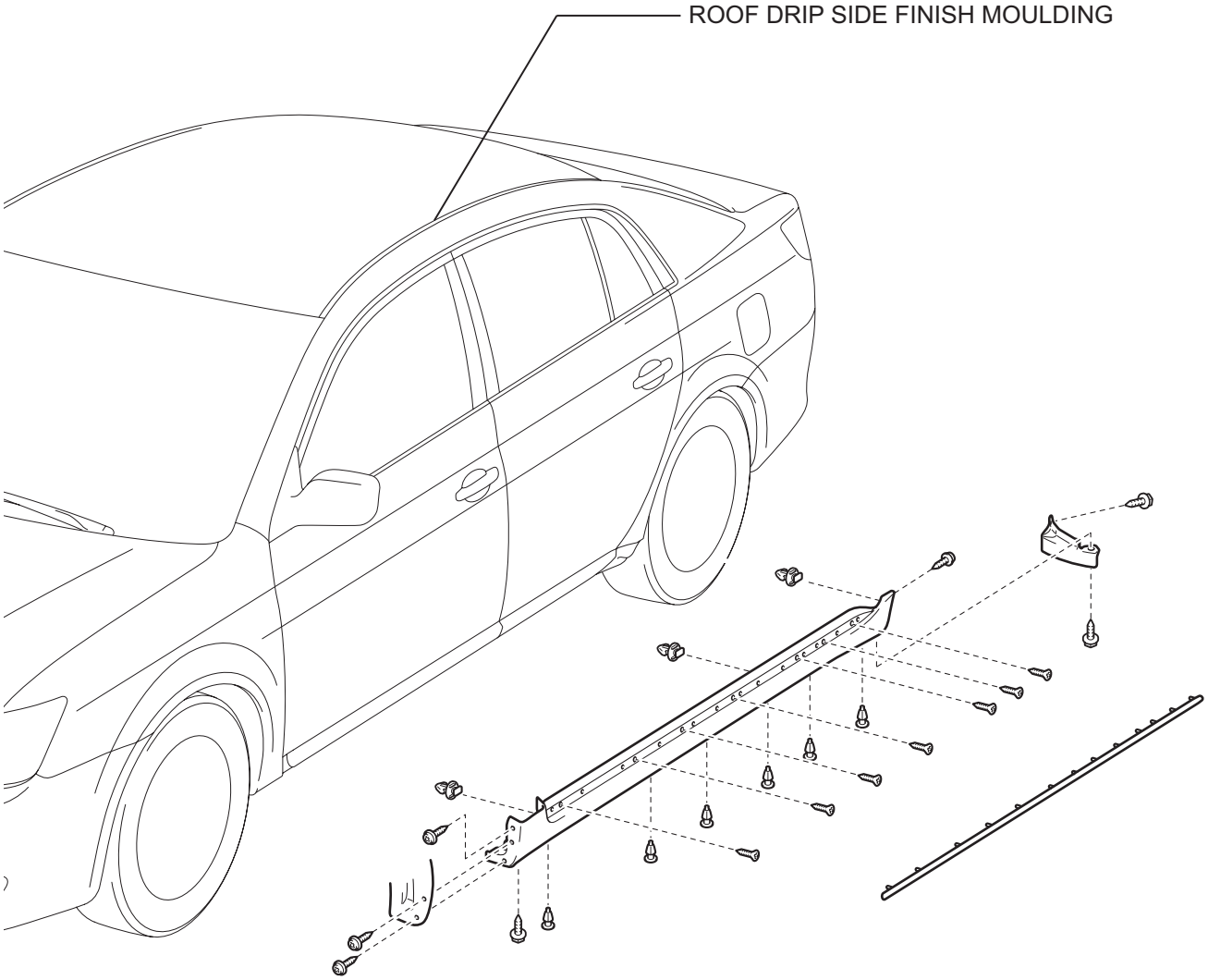

P

B115043E01

ET

REMOVAL

HINT:
When replacing the moulding, heat the body and moulding using a heat light.

Heating temperature

Item	Temperature
Body	**40 to 60°C (104 to 140°F)**
Moulding	**20 to 30°C (68 to 86°F)**

NOTICE:
Do not heat the body and moulding excessively.

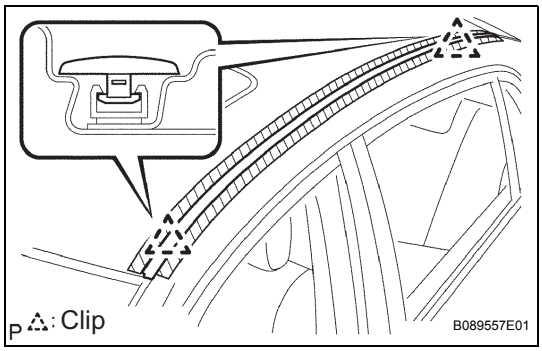

1. REMOVE ROOF DRIP SIDE FINISH MOULDING

(a) Put protective tape around the edges of the moulding.

(b) Using a moulding remover, disengage the 2 moulding's front and rear end clips from the vehicle.

(c) Remove the roof drip finish moulding.
NOTICE:
- **Do not remove the clips from the vehicle body.**
- **If the clips are damaged or removed accidentally, replace them.**

INSTALLATION

1. INSTALL ROOF DRIP SIDE FINISH MOULDING CLIP

HINT:

Follow steps (a) to (c) only when replacing the clips.

(a) Remove the tape that remains on the mounting surface of the body, and then clean the surface with white gasoline.

(b) Heat the clip installation surfaces of the body and moulding.

NOTICE:

Do not heat the body and moulding excessively.

(c) Install new clips in the positions shown in the illustration. Press-fit the clips by hand.

NOTICE:

After press-fitting the clips, wait for 30 minutes or more before installing the moulding.

HINT:

- Minimum hardening time: 30 minutes
- Time needed for complete hardening: 24 hours

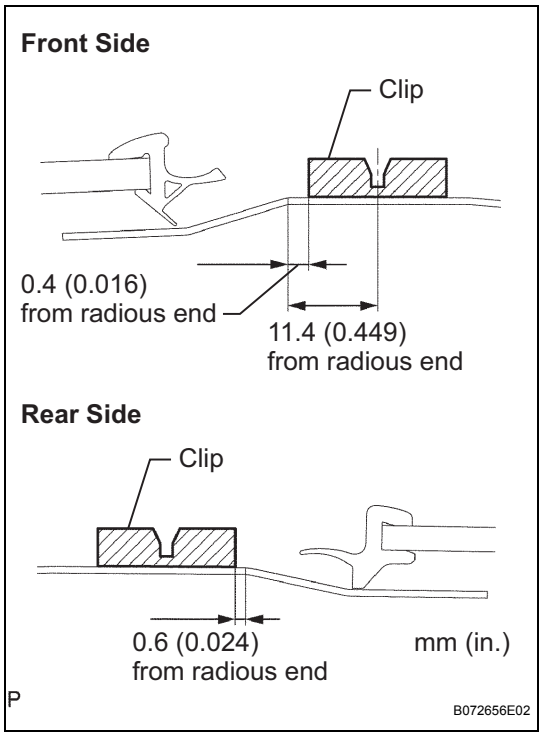

ET

OUTSIDE MOULDING

COMPONENTS

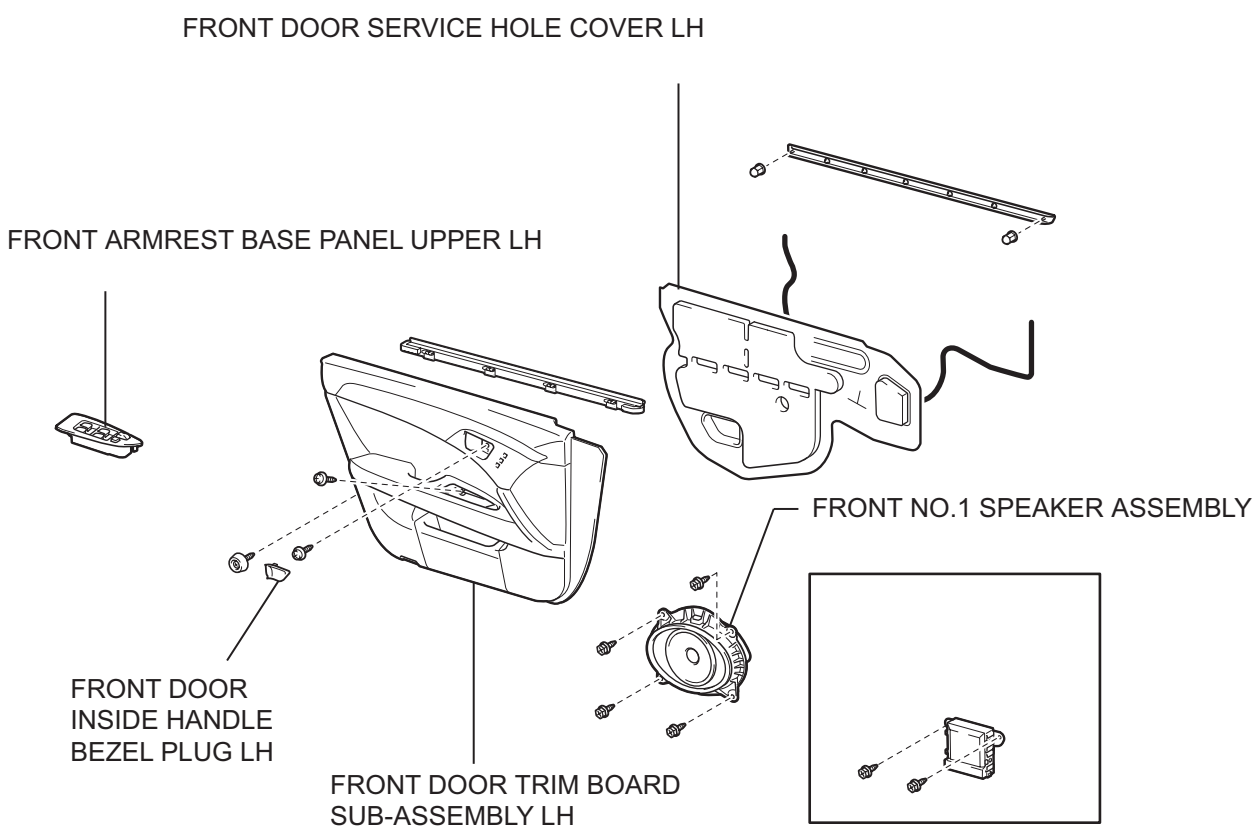

P

B115037E02

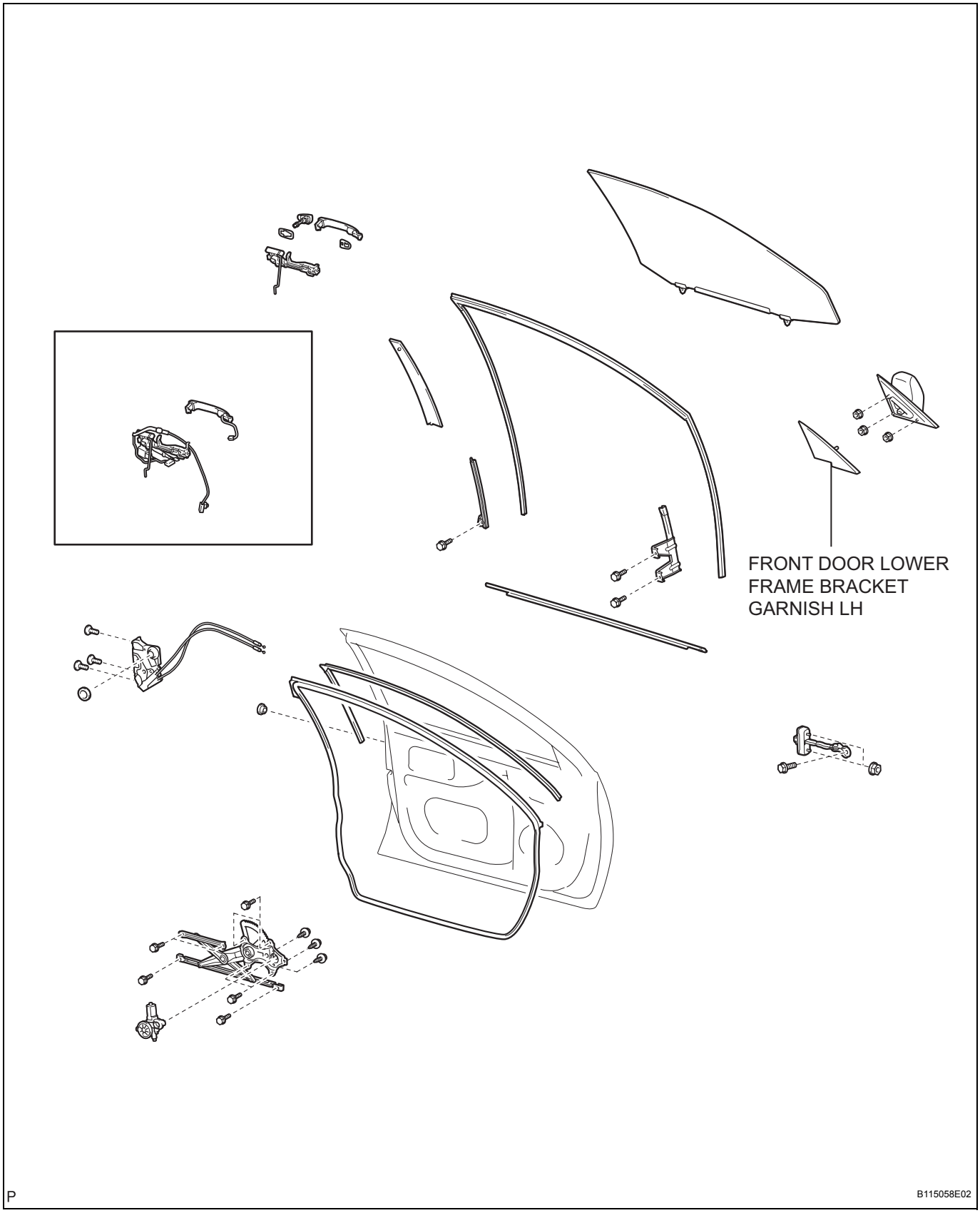
FRONT DOOR LOWER
FRAME BRACKET
GARNISH LH
P
B115058E02

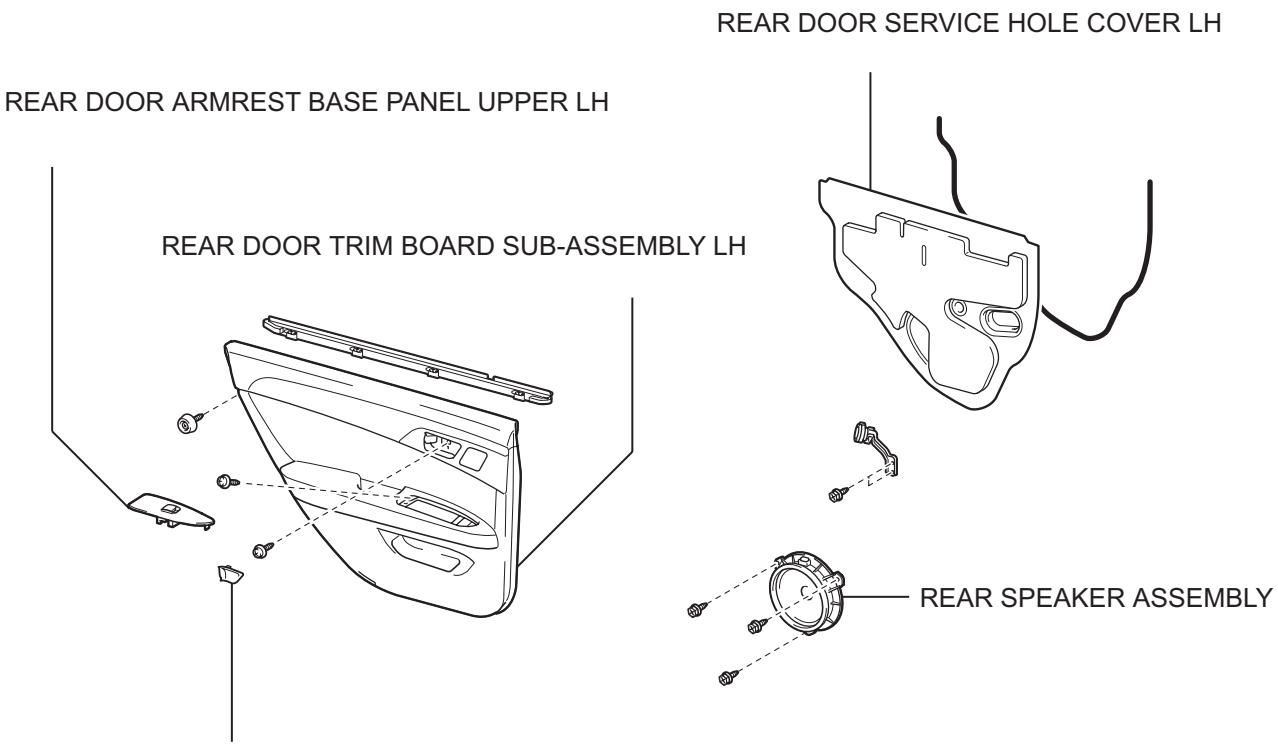

P

B115038E02

ET

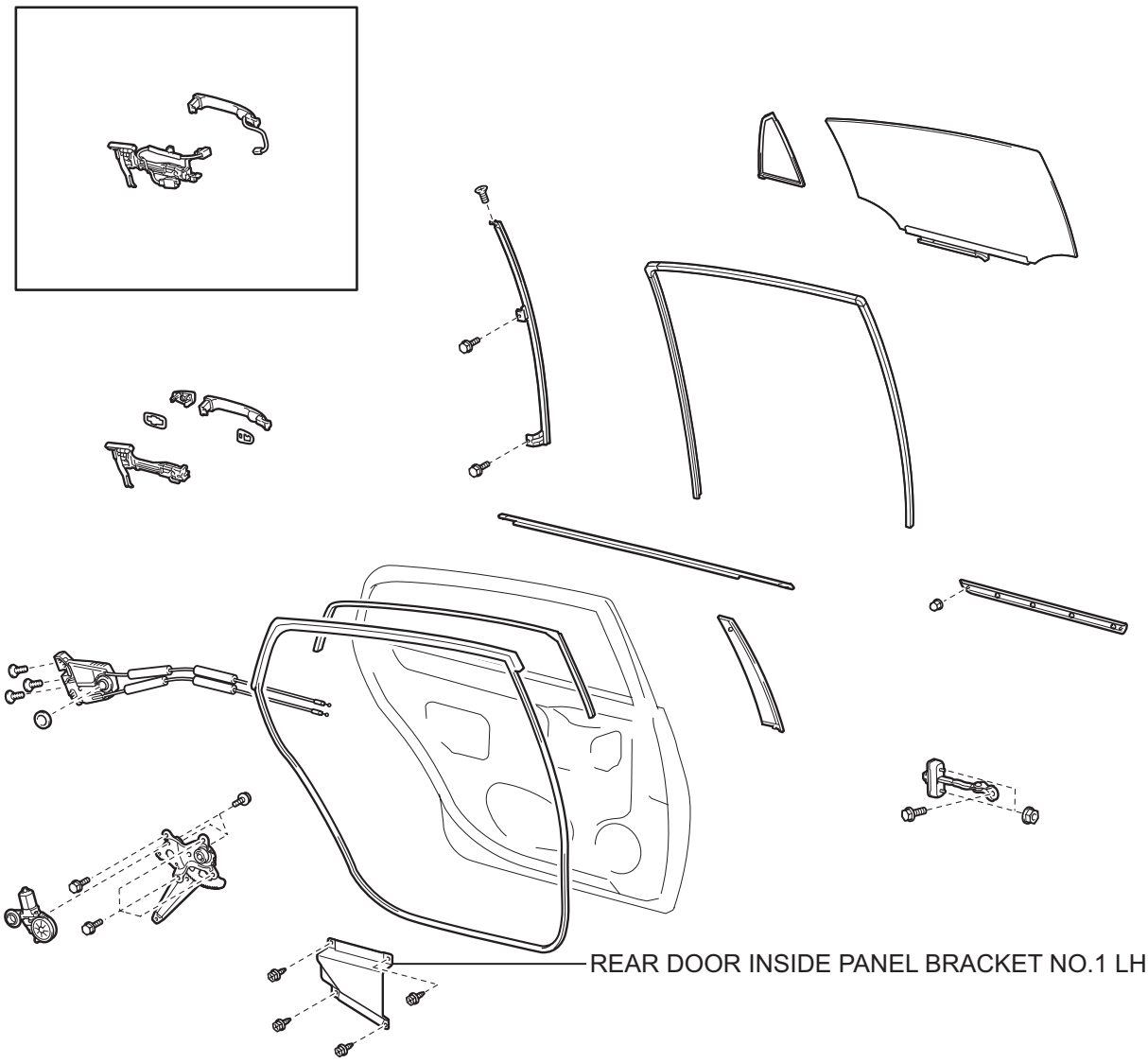

ET

P

B115059E04

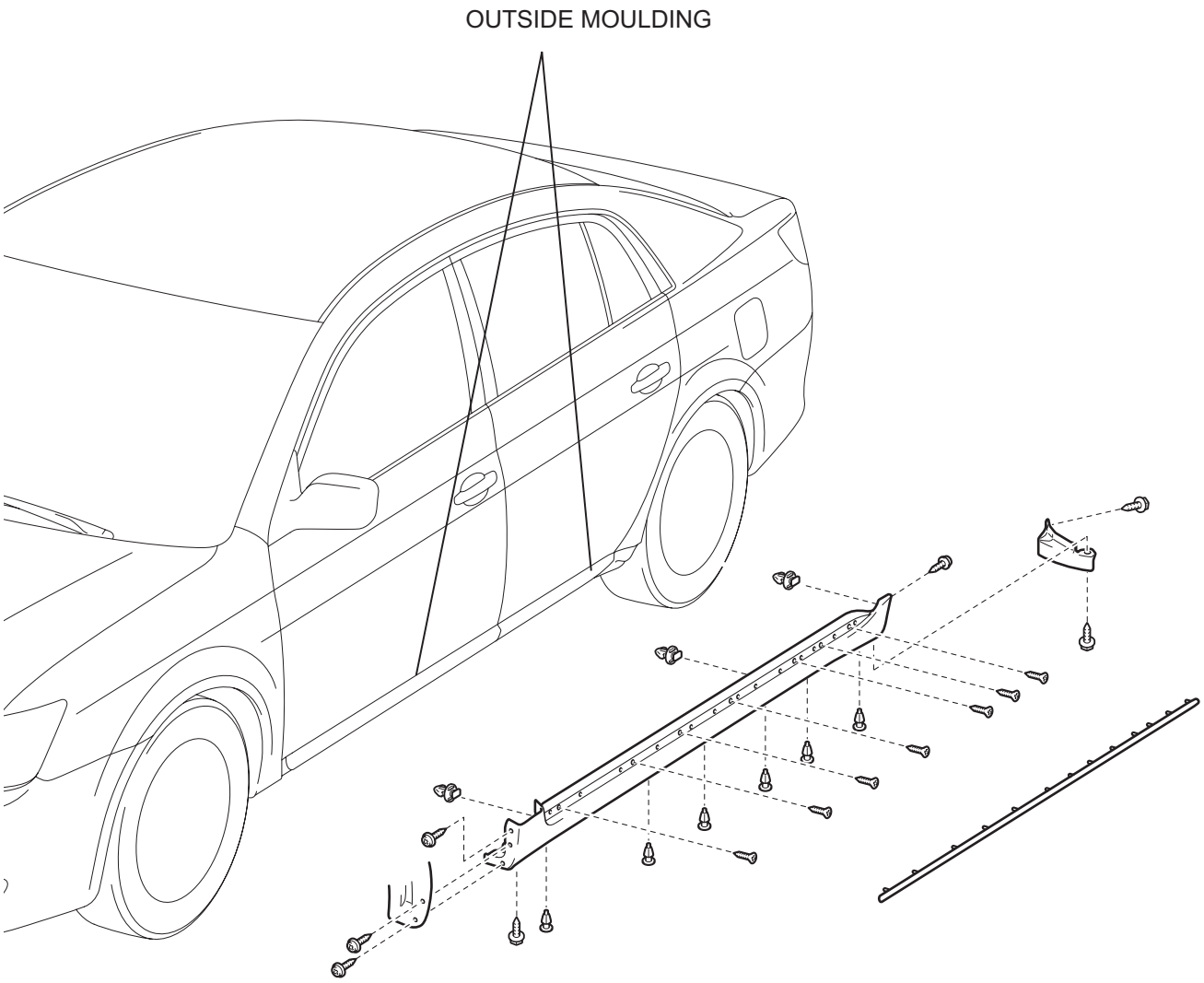
OUTSIDE MOULDING
P
B115043E02

REMOVAL

1. **REMOVE FRONT DOOR LOWER FRAME BRACKET GARNISH LH**
2. **REMOVE FRONT DOOR INSIDE HANDLE BEZEL PLUG LH**
3. **REMOVE FRONT ARMREST BASE PANEL UPPER LH**
4. **REMOVE FRONT DOOR TRIM BOARD SUB-ASSEMBLY LH**
5. **REMOVE FRONT NO.1 SPEAKER ASSEMBLY**
6. **REMOVE FRONT DOOR SERVICE HOLE COVER LH**
7. **REMOVE REAR DOOR INSIDE HANDLE BEZEL PLUG LH**
8. **REMOVE REAR DOOR ARMREST BASE PANEL UPPER LH**
9. **REMOVE REAR DOOR TRIM BOARD SUB-ASSEMBLY LH**
10. **REMOVE REAR DOOR INSIDE PANEL BRACKET NO.1 LH**
11. **REMOVE REAR SPEAKER ASSEMBLY**
12. **REMOVE REAR DOOR SERVICE HOLE COVER LH**

HINT:
When replacing the moulding, heat the body and moulding using a heat light.

Heating temperature

Item	Temperature
Body	40 to 60°C (104 to 140°F)
Moulding	20 to 30°C (68 to 86°F)

NOTICE:
Do not heat the body and moulding excessively.

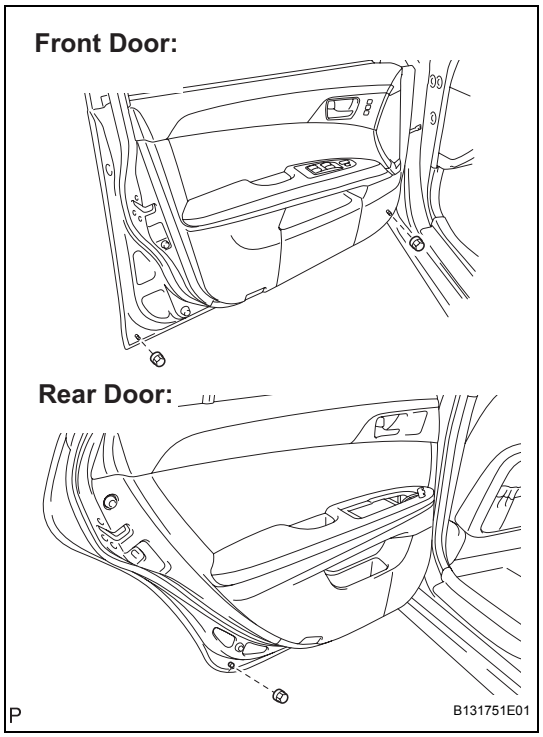

13. REMOVE OUTSIDE MOULDING

(a) Front Door:
Remove the 2 nuts.

(b) Rear Door:
Remove the nut.

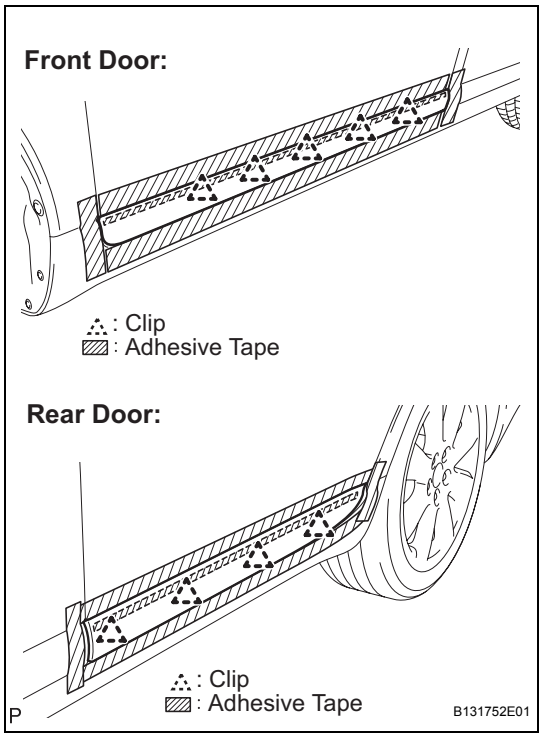

(c) Put protective tape around the edges of the moulding.

(d) Using a heat light, heat the moulding.
NOTICE:
Do not heat the moulding excessively.

(e) Using a moulding remover, remove the clips and the outside moulding.

ET

INSTALLATION

1. INSTALL OUTSIDE MOULDING

(a) Using a heat light, heat the body.
(b) Remove the protective tape from the body.
(c) Wipe off the stains with cleaner.
(d) Clean the moulding (if reusing the moulding).
  (1) Using a heat light, heat the moulding.
  (2) Remove the double-sided tape from the moulding.
  (3) Wipe off the stains with cleaner.
  (4) Apply new double-sided tape to the moulding as shown in the illustration.

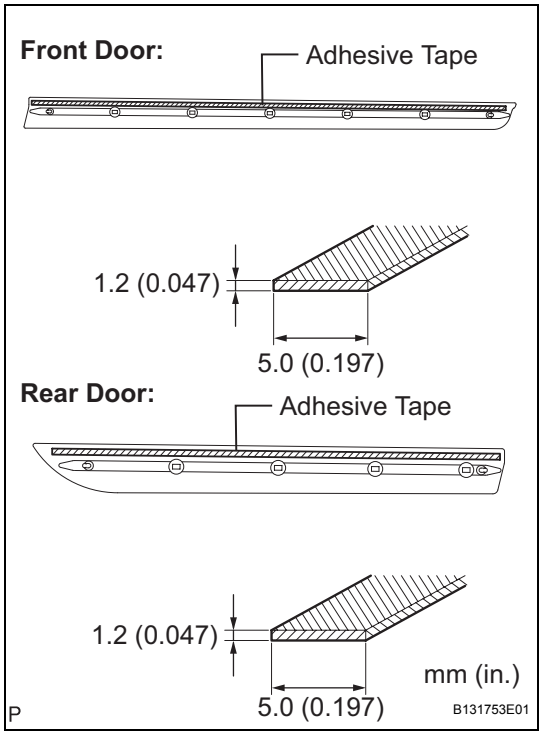

(e) Using a heat light, heat the body and moulding.
(f) Remove the peeling paper from the face of the moulding and attach the moulding securely to the vehicle body.
NOTICE:
Be careful that dirt or foreign objects do not stick to adhesive part when removing the peeling paper.
(g) Push the moulding to the body.
NOTICE:
Do not apply excessive force onto the moulding. Instead, apply steady pressure with your thumbs.
(h) Front Door:
Install the outside moulding with the 2 nuts.
(i) Rear Door:
Install the outside moulding with the nut.

ROCKER PANEL MOULDING

COMPONENTS

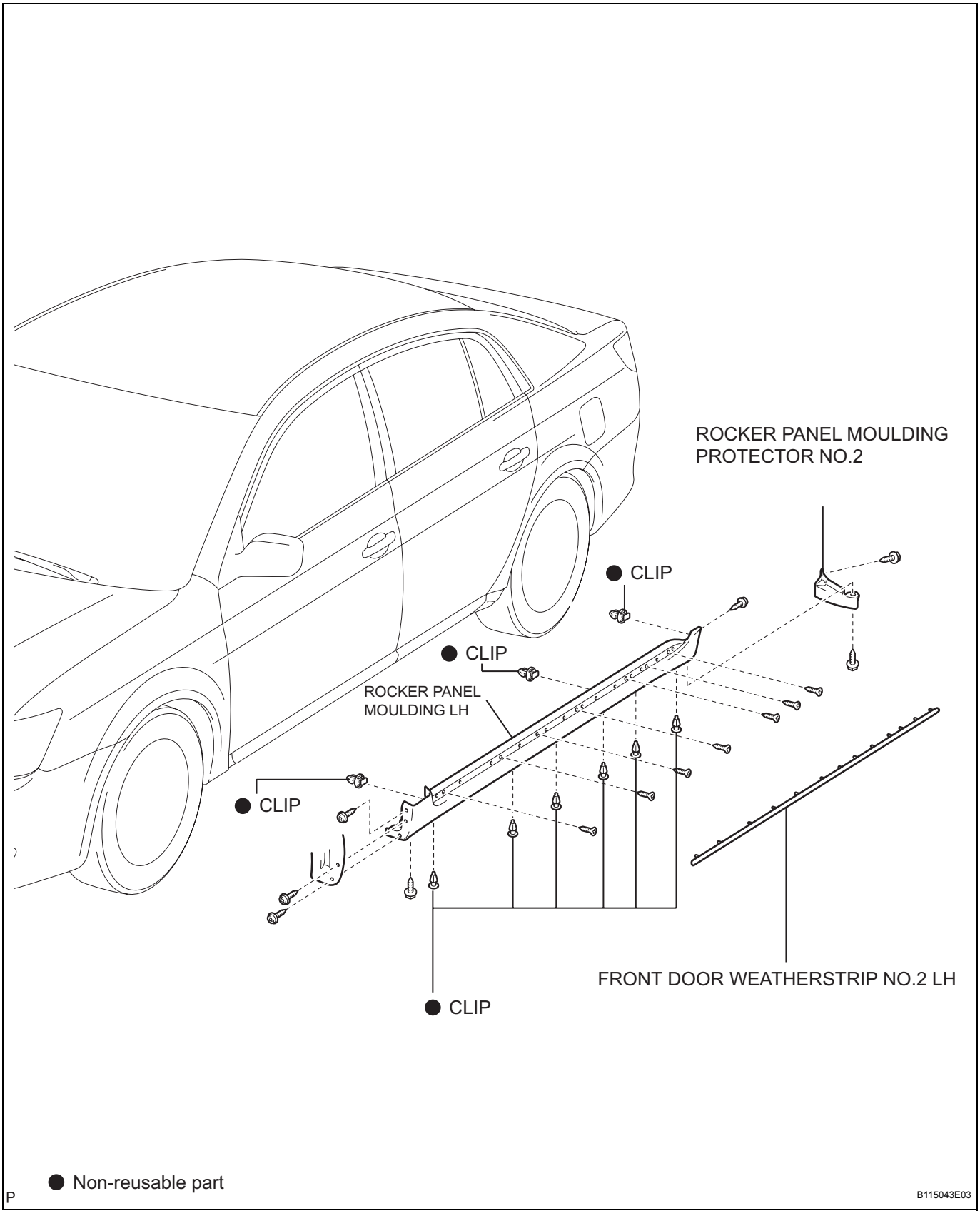

ET

REMOVAL

1. **REMOVE ROCKER PANEL MOULDING PROTECTOR NO.2**
2. **REMOVE FRONT DOOR WEATHERSTRIP NO.2 LH**
3. **REMOVE ROCKER PANEL MOULDING LH**
   (a) Remove the 6 clips.

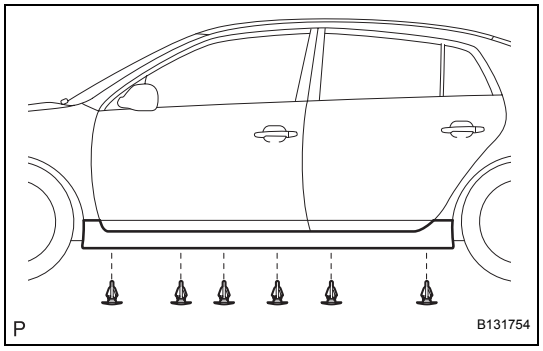

(b) Remove the screw.

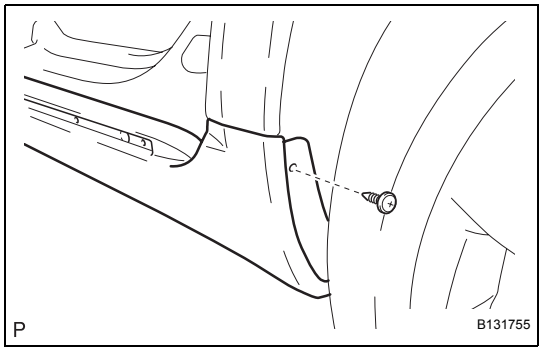

(c) Remove the 2 screws.

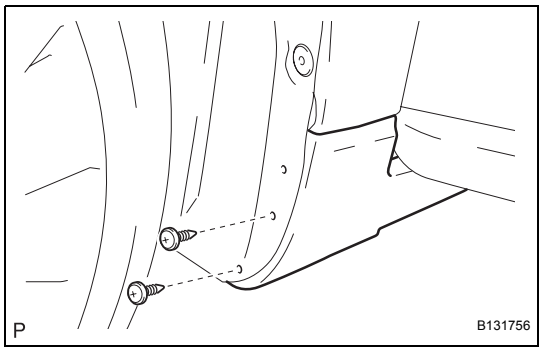

(d) Remove the 2 screws.

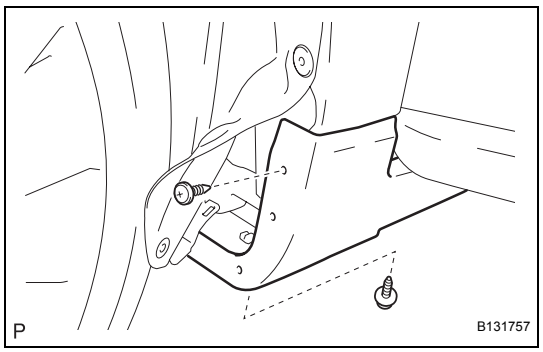

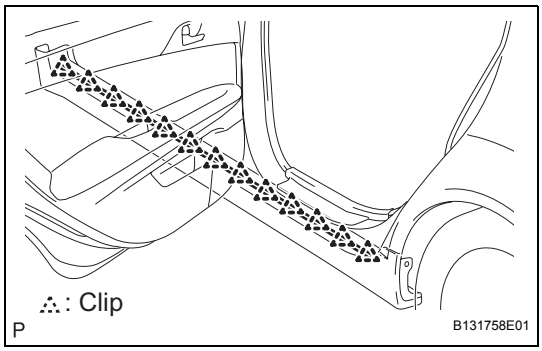

(e) Disengage the 13 clips and remove the front door weatherstrip No.2 LH.

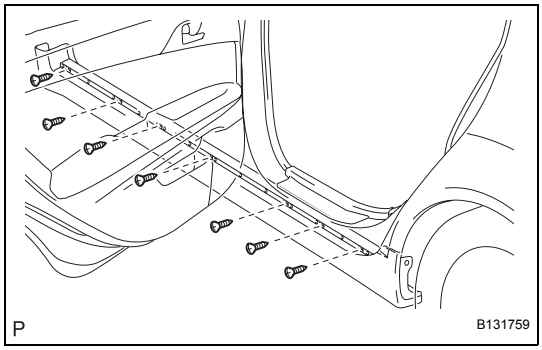

(f) Remove the 7 screws.

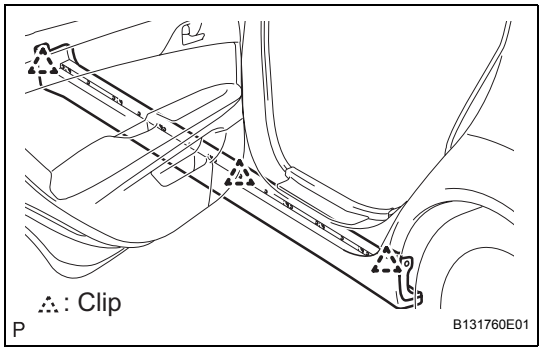

(g) Disengage the 3 clips and remove the rocker panel moulding LH.

INSTALLATION

1. INSTALL ROCKER PANEL MOULDING LH

(a) Engage the 3 new clips and the rocker panel moulding LH.

NOTICE:

Always use new clips at the time of installation.

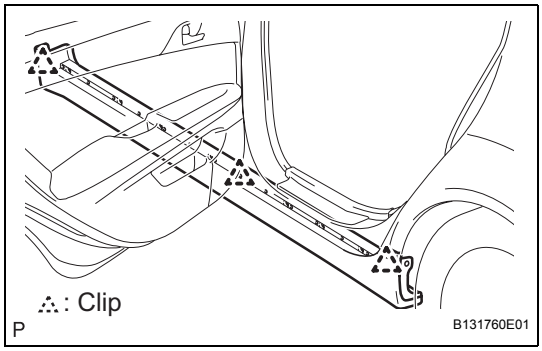

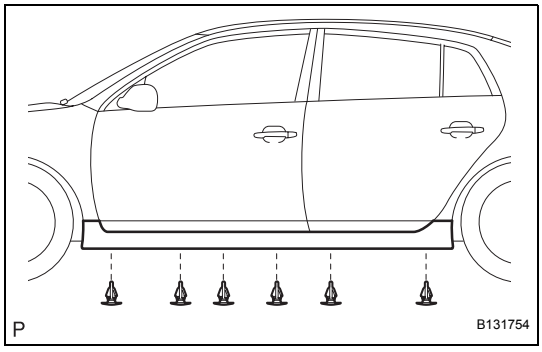

(b) Install the rocker panel moulding LH with the 6 new clips.

NOTICE:

Always use new clips at the time of installation.

ET

FRONT DOOR WINDOW FRAME MOULDING

COMPONENTS

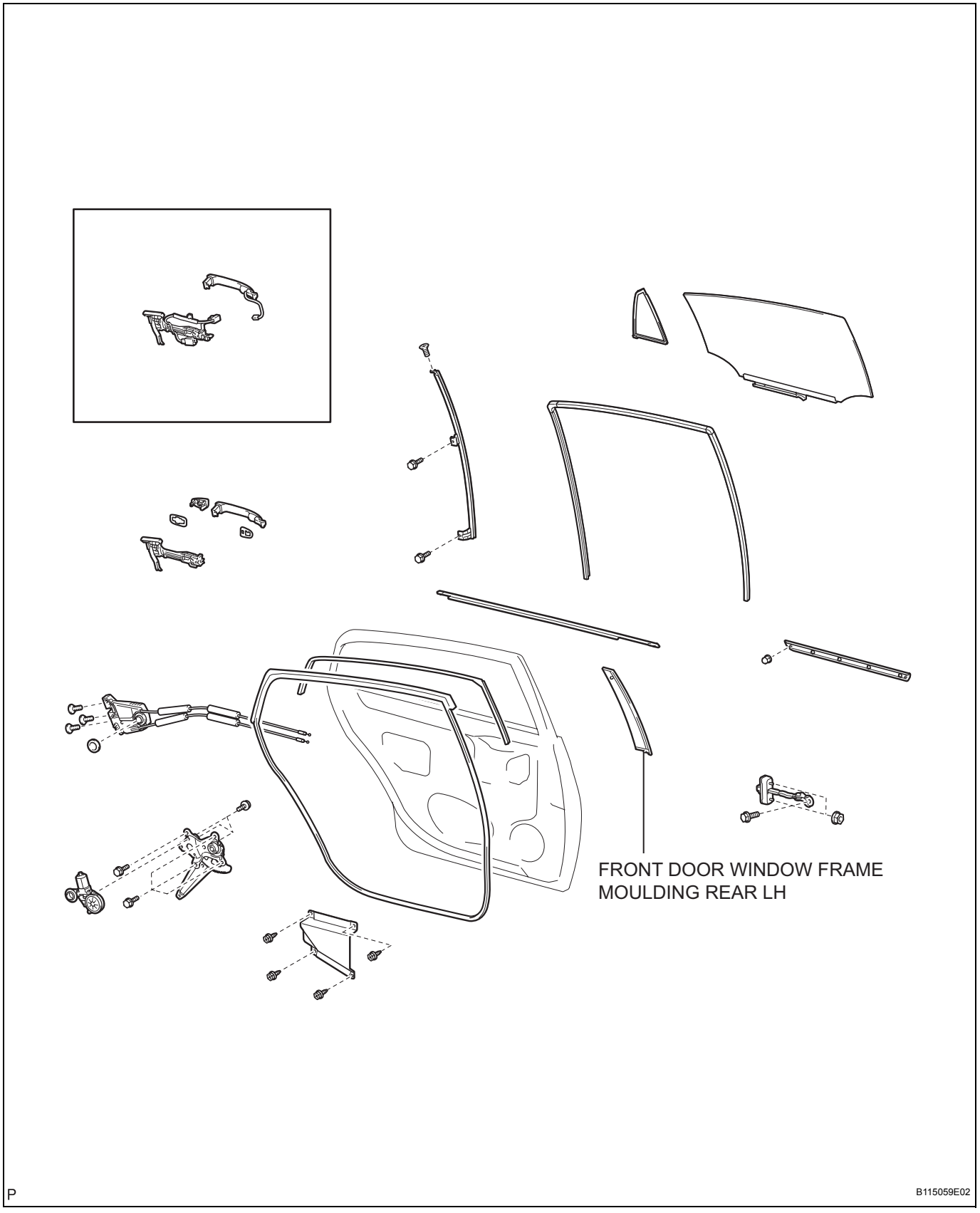

REMOVAL

HINT:
When replacing the moulding, heat the body and moulding using a heat light.

Heating temperature

Item	Temperature
Body	40 to 60°C (104 to 140°F)
Moulding	20 to 30°C (68 to 86°F)

NOTICE:
Do not heat the moulding excessively.

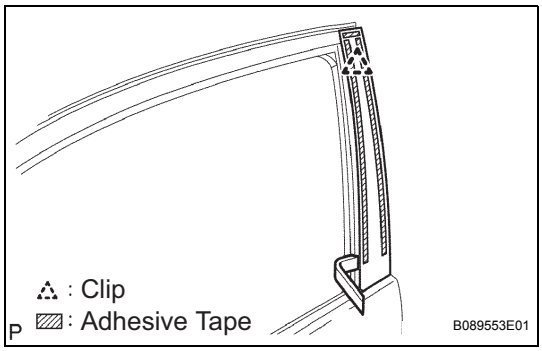

1. **REMOVE FRONT DOOR WINDOW FRAME MOULDING REAR LH**
   (a) Completely lower window glass.
   (b) Using a heat light, heat the body moulding.
   NOTICE:
   Do not heat the moulding excessively.
   (c) Using a moulding remover, remove the clip and the front door window frame moulding rear LH.

INSTALLATION

1. INSTALL FRONT DOOR WINDOW FRAME MOULDING REAR LH

(a) Using a heat light, heat the body mounting surface.
NOTICE:
Do not heat the spoiler excessively.

(b) Remove the protective tape from the body.

(c) Wipe off the stains with cleaner.

(d) Align the standard point with the hole on the door window frame.

(e) Engage the clip and install the front door window frame moulding rear LH.

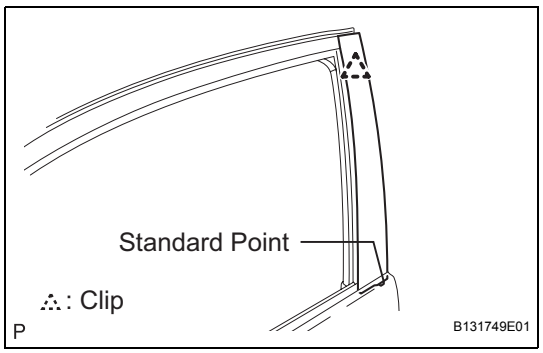

REAR DOOR WINDOW FRAME MOULDING

COMPONENTS

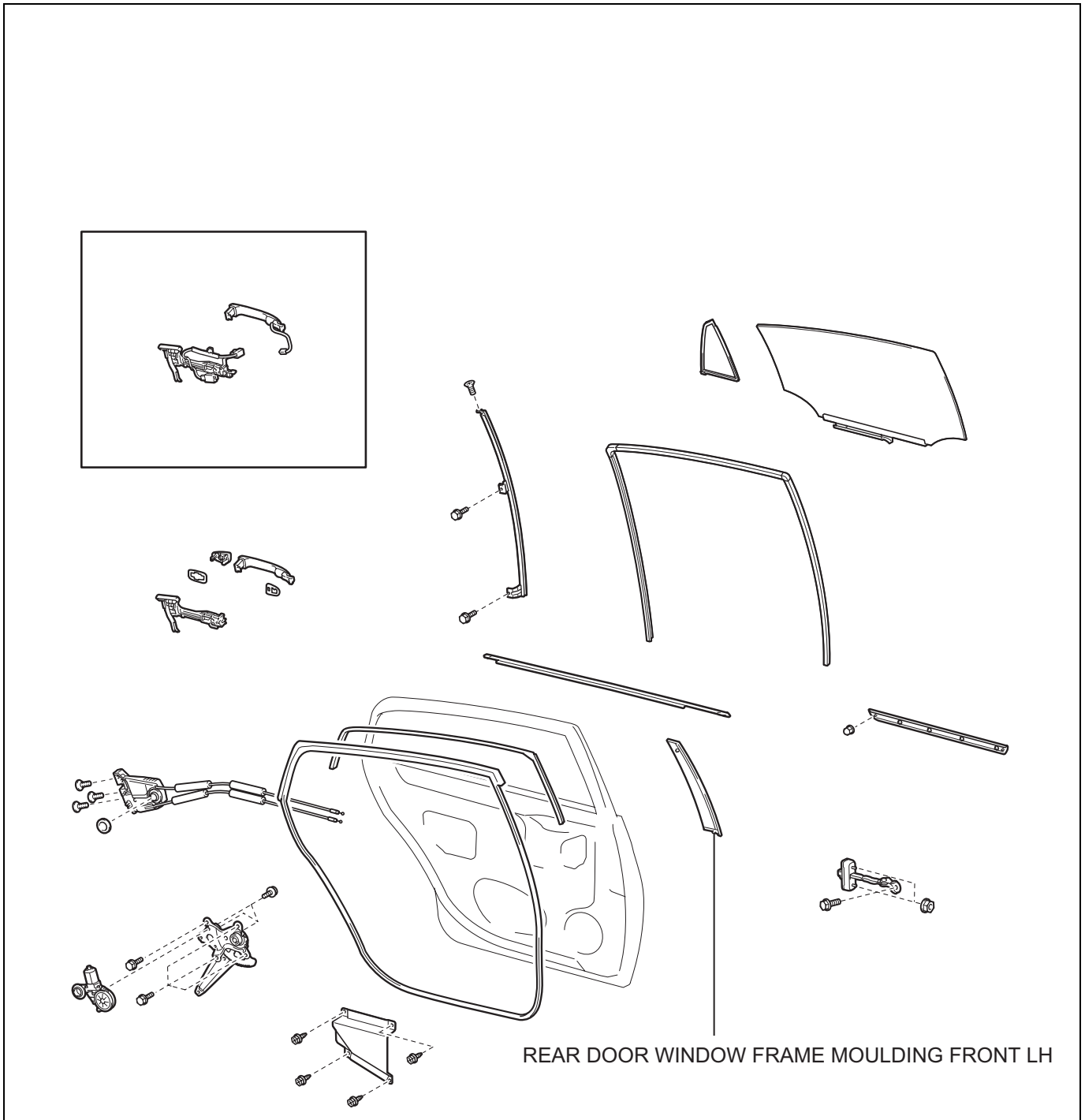

REMOVAL

HINT:
When replacing the moulding, heat the body and moulding using a heat light.

Heating temperature

Item	Temperature
Body	40 to 60°C (104 to 140°F)
Moulding	20 to 30°C (68 to 86°F)

NOTICE:
Do not heat the body and moulding excessively.

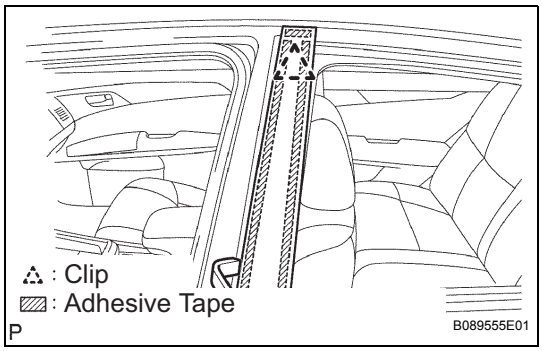

1. **REMOVE REAR DOOR WINDOW FRAME MOULDING FRONT LH**
   (a) Completely lower window glass.
   (b) Using a heat light, heat the body moulding.
   NOTICE:
   Do not heat the moulding excessively.
   (c) Using a moulding remover, remove the clip and the rear door window frame moulding front LH.

INSTALLATION

1. INSTALL REAR DOOR WINDOW FRAME MOULDING FRONT LH

(a) Using a heat light, heat the body mounting surface.
NOTICE:
Do not heat the spoiler excessively.

(b) Remove the protective tape from the body.

(c) Wipe off the stains with cleaner.

(d) Align the standard point with the hole on the door window frame.

(e) Engage the clip and install the rear door window frame moulding rear LH.

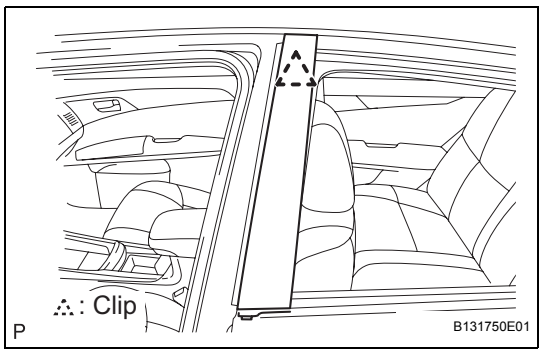

FUEL SYSTEM

PRECAUTION

1. EXPRESSIONS OF IGNITION SWITCH

(a) The type of ignition switch used on this model differs according to the specifications of the vehicle. The expressions listed in the table below are used in this section.

Switch Type		Ignition Switch (position)	Engine Switch (condition)
Expression	Ignition Switch off	LOCK	Off
	Ignition Switch on (IG)	ON	On (IG)
	Ignition Switch on (ACC)	ACC	On (ACC)
	Engine Start	START	Start

2. PRECAUTION

(a) Before inspecting and repairing the fuel system, disconnect the negative (-) battery cable.

(b) Do not smoke or work near fire when handling the fuel system.

(c) Keep gasoline away from rubber or leather parts.

3. DISCHARGE FUEL SYSTEM PRESSURE

CAUTION:

- **Perform the following procedures to prevent fuel from spilling out before removing any fuel system parts.**
- **Pressure will still remain in the fuel line even after performing the following procedures. When disconnecting the fuel line, cover with a shop rag or a piece of cloth to prevent fuel from spraying or spewing out.**

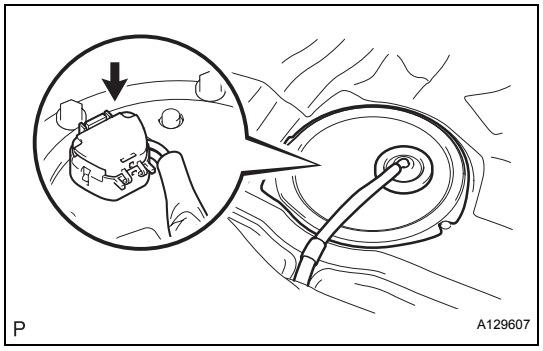

(a) Disconnecting the fuel pump connector.

(1) Remove the rear seat cushion assembly.

(2) Remove the rear floor service hole cover.

(3) Disconnect the fuel pump connector.

(4) Start the engine.

(5) After the engine stops, turn the ignition switch off.

HINT:

DTC P0171/25 (fuel problem) and/or P0191/49 (fuel pressure sensor signal error) may be detected.

(6) Crank the engine again. Check that the engine does not start.

(7) Remove the fuel tank cap to discharge pressure from the fuel tank.

(8) Disconnect the negative (-) battery terminal cable.

(9) Reconnect the fuel pump connector.

(10) Install the rear floor service hole cover.

(11) Install the rear seat.

4. FUEL SYSTEM

(a) When disconnecting the high fuel pressure line, a large amount of gasoline will spill out, so observe the following procedures:
(1) Discharge the fuel system pressure. (step 3)
(2) Disconnect the fuel pump tube (See page FU-26).
(3) Drain the fuel that remains inside the fuel pump tube.
(4) To protect the disconnected fuel pump tube from damage and contamination, cover it with a plastic bag.
(5) Put a container under the connection part.

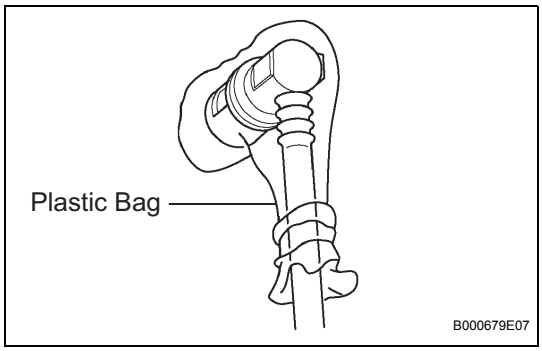

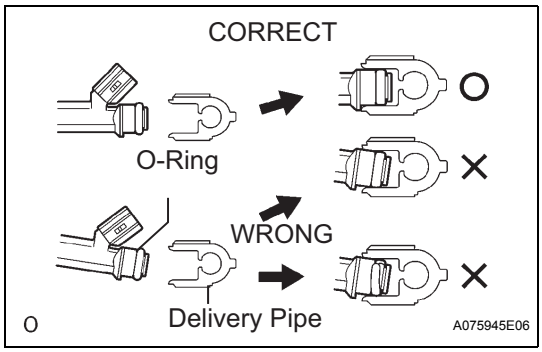

(b) Observe the following precautions when removing and installing fuel injectors:
(1) Never reuse the O-ring.
(2) When placing a new O-ring on the injector, do not damage the O-ring.
(3) Coat new O-ring with spindle oil or gasoline before installing.
NOTICE:
Do not use engine oil, gear oil or brake oil.

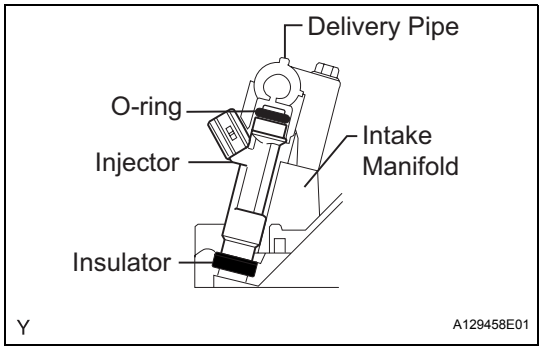

(c) Install the injector to the delivery pipe and lower intake manifold as shown in the illustration.
NOTICE:
Before installing the injector, be sure to apply grease or gasoline on the place where the delivery pipe or cylinder head contacts the O-ring of the injector.

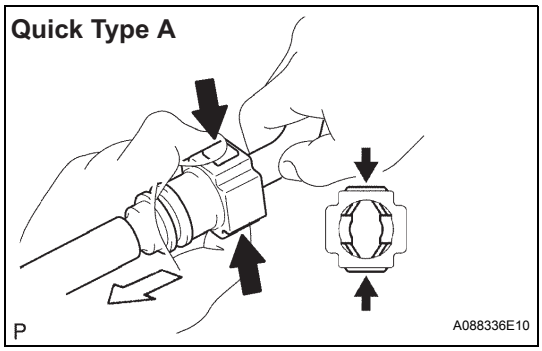

(d) Observe the following precautions when disconnecting the fuel tube connectors (Quick type A):
(1) Remove the fuel pipe clamp No.1.

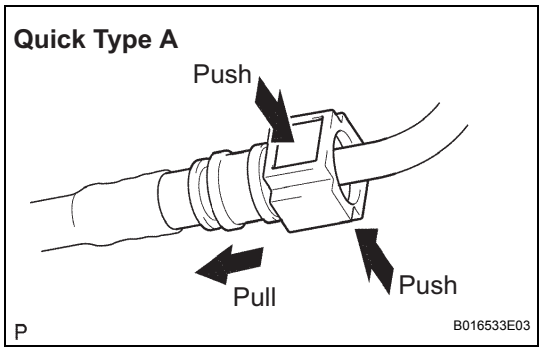

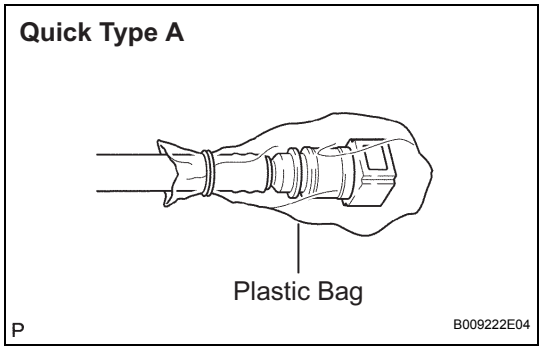

(2) Check that there is no dirt or order foreign objects on the pipe and around the connector before disconnecting them. Clean them it necessary.
(3) Disconnect the connector from the pipe by hand.
(4) When the connector and the pipe are stuck, push in and pull on the connector to release it and pull the connector out of the pipe carefully.
(5) Check that there is no dirt or other foreign objects on the sealing surface of the disconnected pipe. Clean it away if necessary.
(6) Do not damage the disconnected pipe and connector, and prevent intrusion of foreign objects by covering them with a plastic bag.

FU

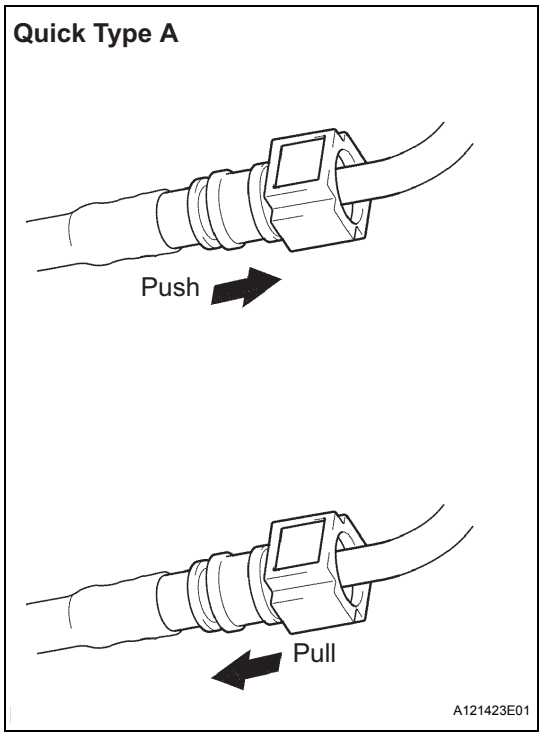

(e) Observe the following precautions when connecting the fuel tube connectors (Quick Type A):
(1) Check that there is no damage or foreign objects in the connected part of the pipe.
(2) Match the axis of the connector with the axis of the pipe, and push into the connector until the connector makes a "click" sound. If the connection is tight, apply a small amount of fresh engine oil to the tip of the pipe.
(3) After finishing the connection, check if the pipe and the connector are security connected by pulling on them.
(4) Check for fuel leaks.

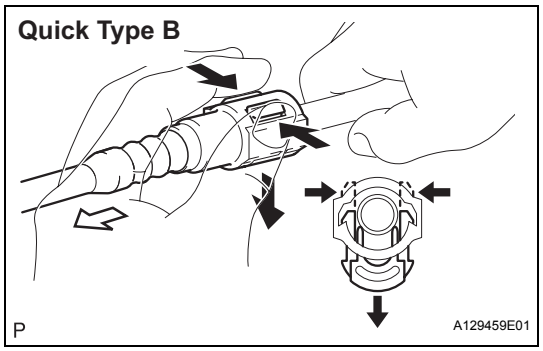

(f) Observe the following precautions when disconnecting the fuel tube connector (Quick type B):
(1) Check that there is no dirt or other foreign objects around the connector before disconnecting the fuel pump tube.

(2) Disengage the 2 claws of the connector retainer. Push down on the connector and disconnect it from the pipe.
HINT:
Be sure to disconnect it by hand.

(3) If the connector and pipe are stuck, pinch the fuel pipe by hand and push or pull on the connector to disconnect it.

(4) Check that there is no dirt or other foreign objects on the sealing surface of the disconnected pipe.

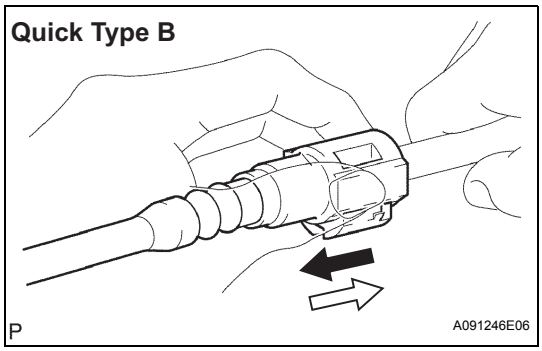

(5) Do no damage the connector and pipe, and prevent intrusion of foreign objects by covering them with a plastic bag.

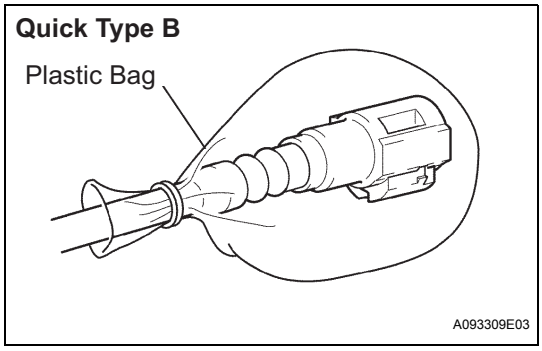

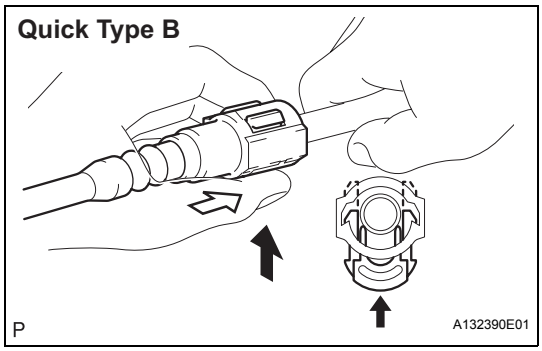

(g) Observe the following precautions when disconnecting the fuel tube connector (Quick Type B):

(1) Match the axis of the connector with the axis of the pipe. Push into the connector and push up on the retainer.
HINT:
If it is hard to make the connection, apply a small amount of engine oil to the tip of the pipe.

(2) After finishing the connection, pull on the connector and pipe and make sure that they are securely connected.

(3) Check for fuel leaks.

(h) Observe the following precautions when handling a nylon tube:
CAUTION:
- **Do not twist the connection part of the nylon tube and the quick connector when connecting them.**
- **Do not bend or twist the nylon tube.**
- **Do not remove the EPDM protector on the outside of the nylon tube.**
- **Do not close the piping by bending the nylon tube.**

5. CHECK FOR FUEL LEAKS

(a) Check that there are no fuel leaks after doing maintenance on the fuel system (See page FU-19).

PARTS LOCATION

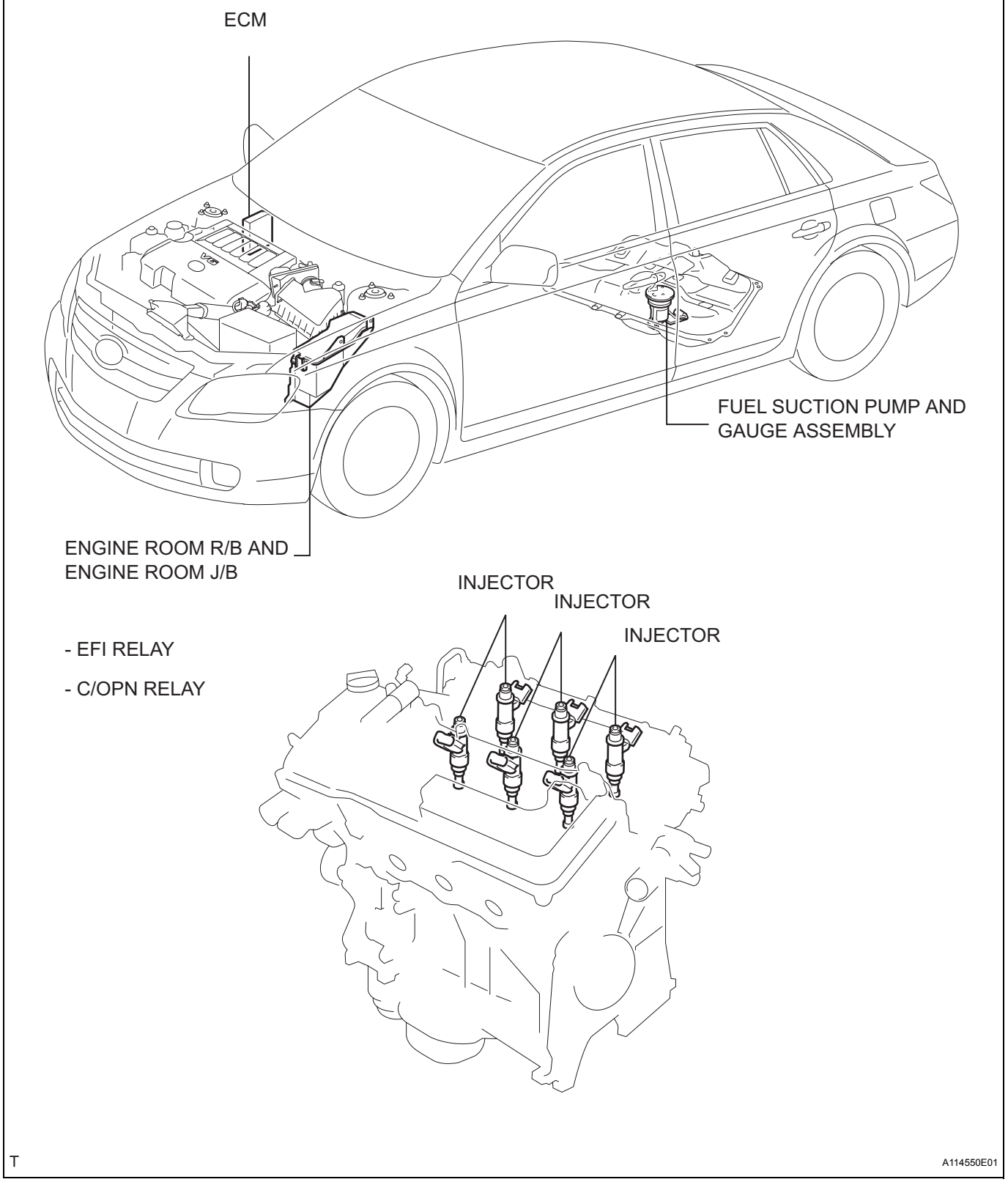

SYSTEM DIAGRAM

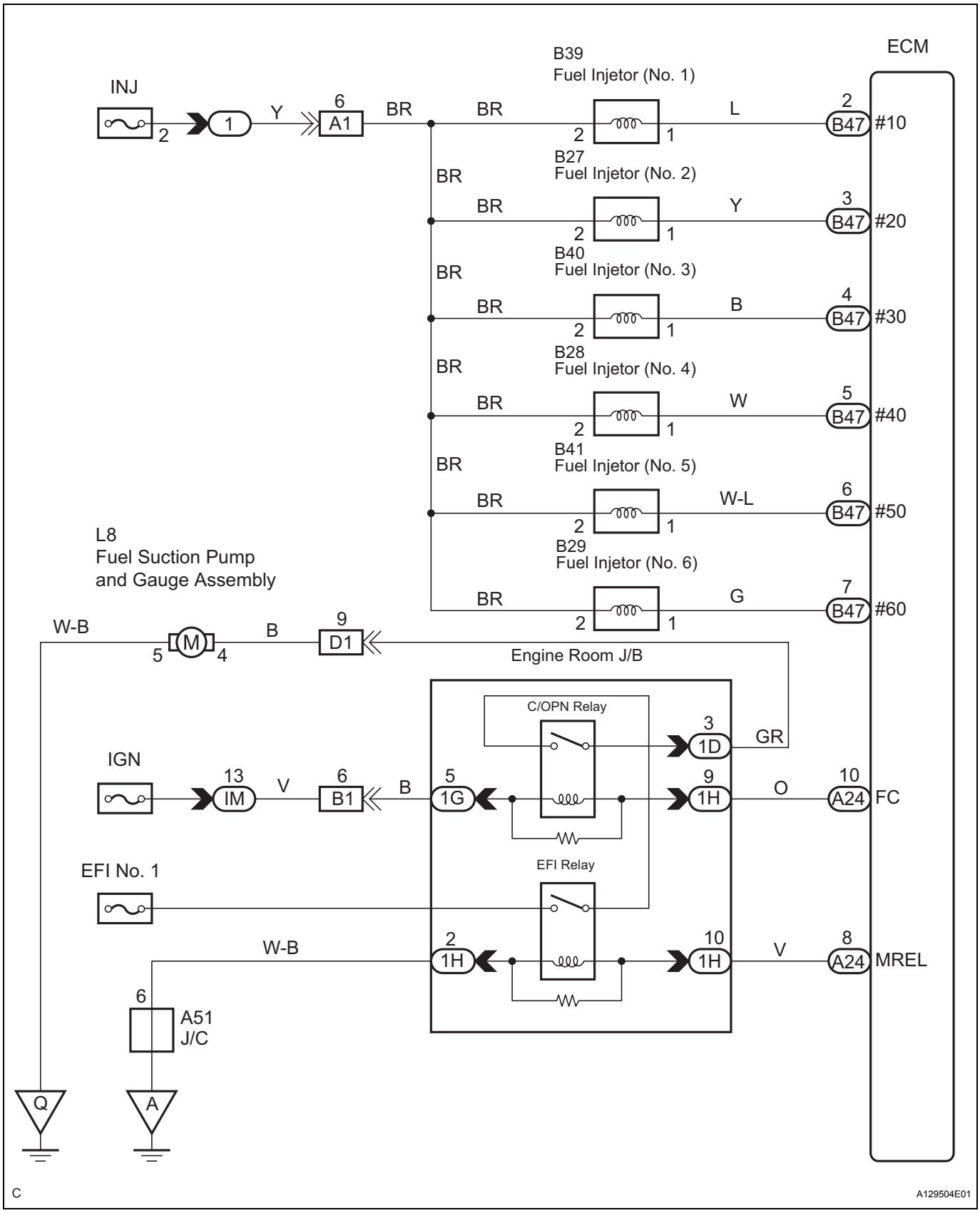

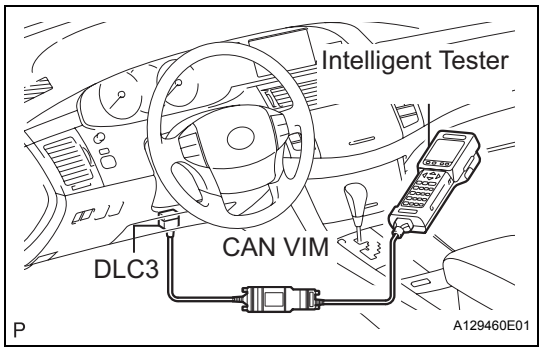

ON-VEHICLE INSPECTION

1. CHECK FOR FUEL PUMP OPERATION AND FUEL LEAK

(a) Connect the intelligent tester to the DLC3.
(b) Turn the ignition switch on (IG).
NOTICE:
Do not start the engine.
(c) Turn the intelligent tester on.
(d) On the intelligent tester, select following the items: Powertrain / Engine and ETC / Active Test / Control the Fuel Pump / speed.
(e) Check fuel pump operation while operating it with the intelligent tester.
(f) Check that there is pressure in the fuel inlet hose. If the fuel pump does not operate, release it.
(g) Check that there are no fuel leaks from any part of the fuel system.
(h) Turn the ignition switch off.
(i) Disconnect the intelligent tester from the DLC3.

2. CHECK FUEL PRESSURE

(a) Discharge fuel system pressure.
HINT:
See the step 3 of this "PRECAUTION" (See page FU-1)
(b) Using a voltmeter, measure the battery voltage.
Standard:
11 to 14 V
(c) Disconnect the negative (-) battery cable.
(d) Disconnect the fuel hose from the fuel main tube (See page FU-26).

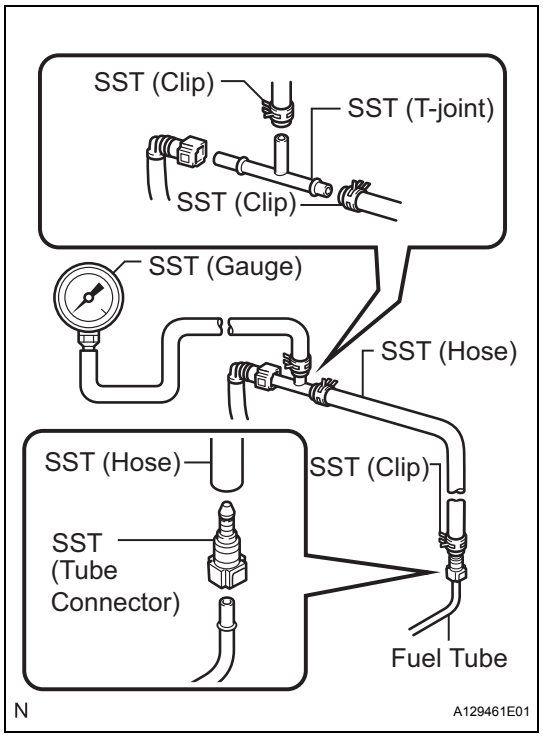

(e) Install SST (pressure gauge) using SST and a fuel tube connector as shown in the illustration.
SST 09268-41048 (90467-13001, 95336-08070, 09268-41500), 09268-45014 (09268-41200, 09268-41220, 09268-41250)
(f) Wipe up any gasoline.
(g) Connect the negative (-) battery cable.

FU

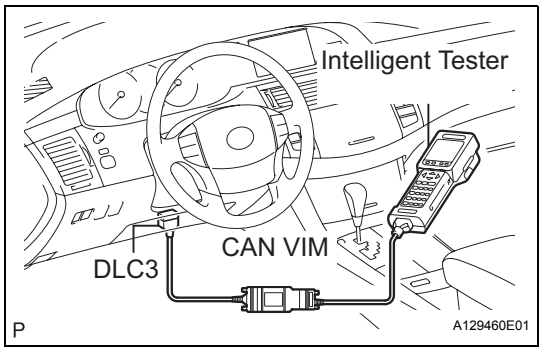

(h) Connect the intelligent tester to the DLC3.
(i) Start the engine.
(j) Measure the fuel pressure at idle.
Fuel pressure:

304 to 343 kPa (3.1 to 3.5 kgf*cm^2,44.1 to 49.7psi)

- If the fuel pressure is greater than the standard value, replace the fuel pump.
- If the fuel pressure is less than the standard value, check the connection of the fuel hose and the fuel pump.

(k) Stop the engine.
(l) Check that the fuel pressure remains as specified for 5 minutes after the engine stops.
Fuel pressure:

147 kPa (1.5 kgf*cm^2, 21 psi) or more

If the fuel pressure is not as specified, check the fuel pump or fuel injector.
(m) After checking the fuel pressure, carefully disconnect the negative (-) battery cable, and remove the SST and fuel tube connector to prevent gasoline from splashing.
(n) Reconnect the fuel tube to the main fuel tube.
(o) Check for fuel leaks (See page FU-19).

FU

FUEL INJECTOR

COMPONENTS

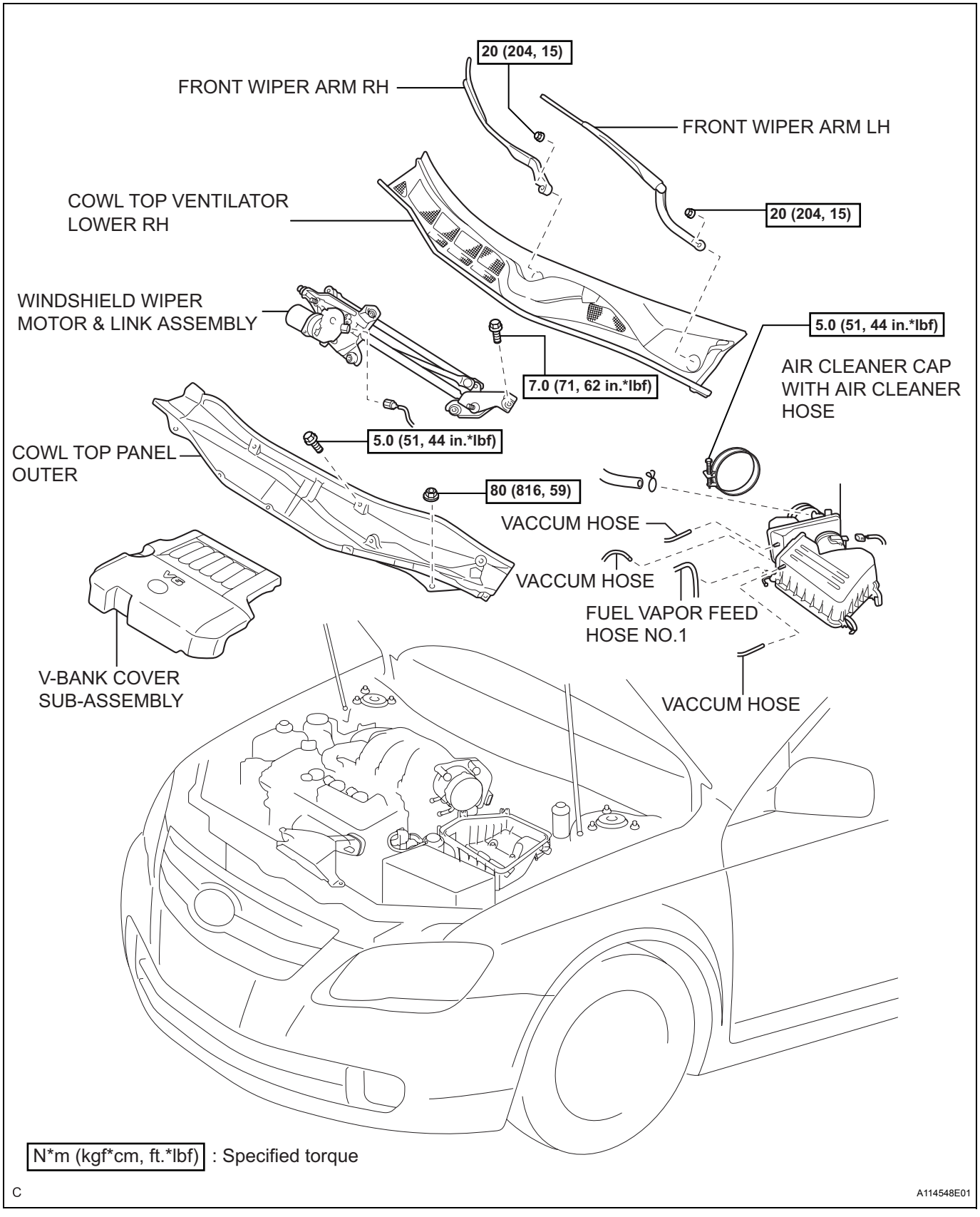

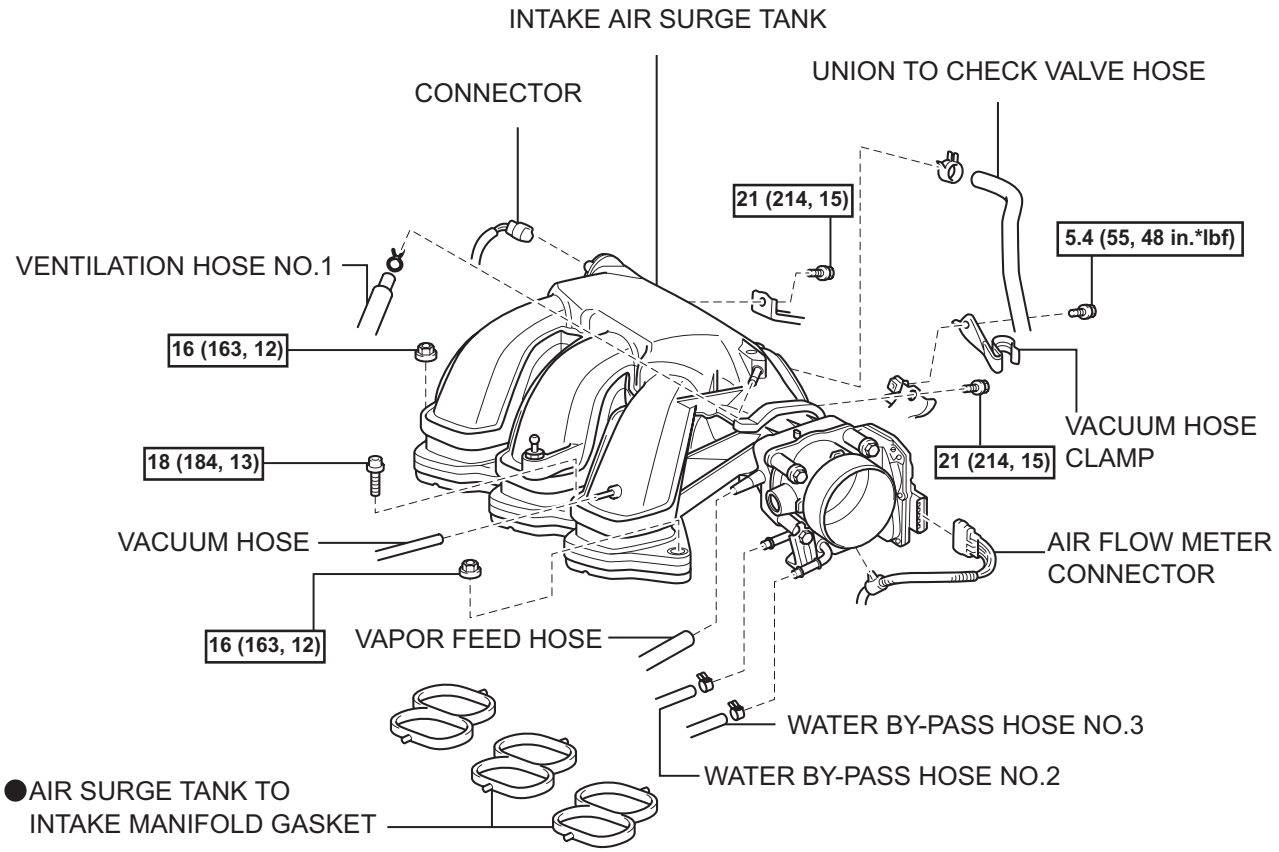

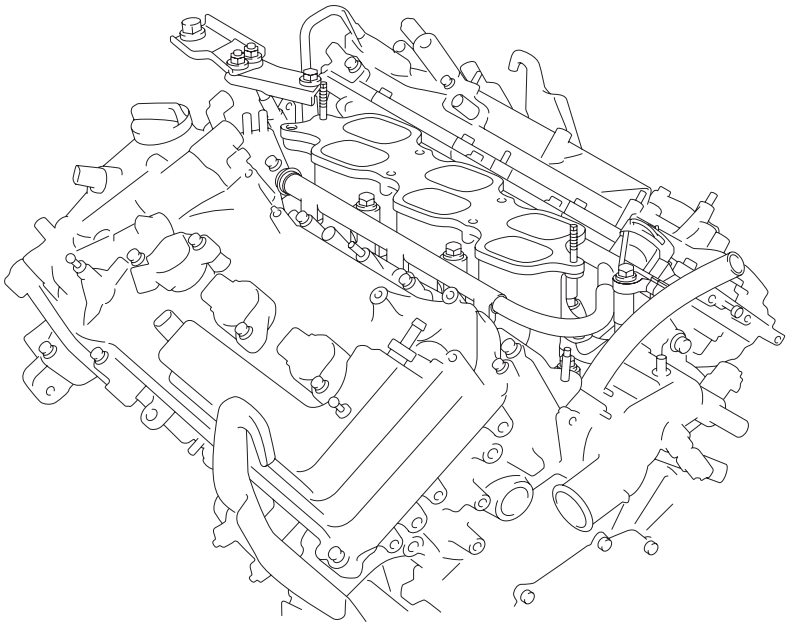

N*m (kgf*cm, ft.*lbf) : Specified torque

● Non-reusable part

C

A114551E01

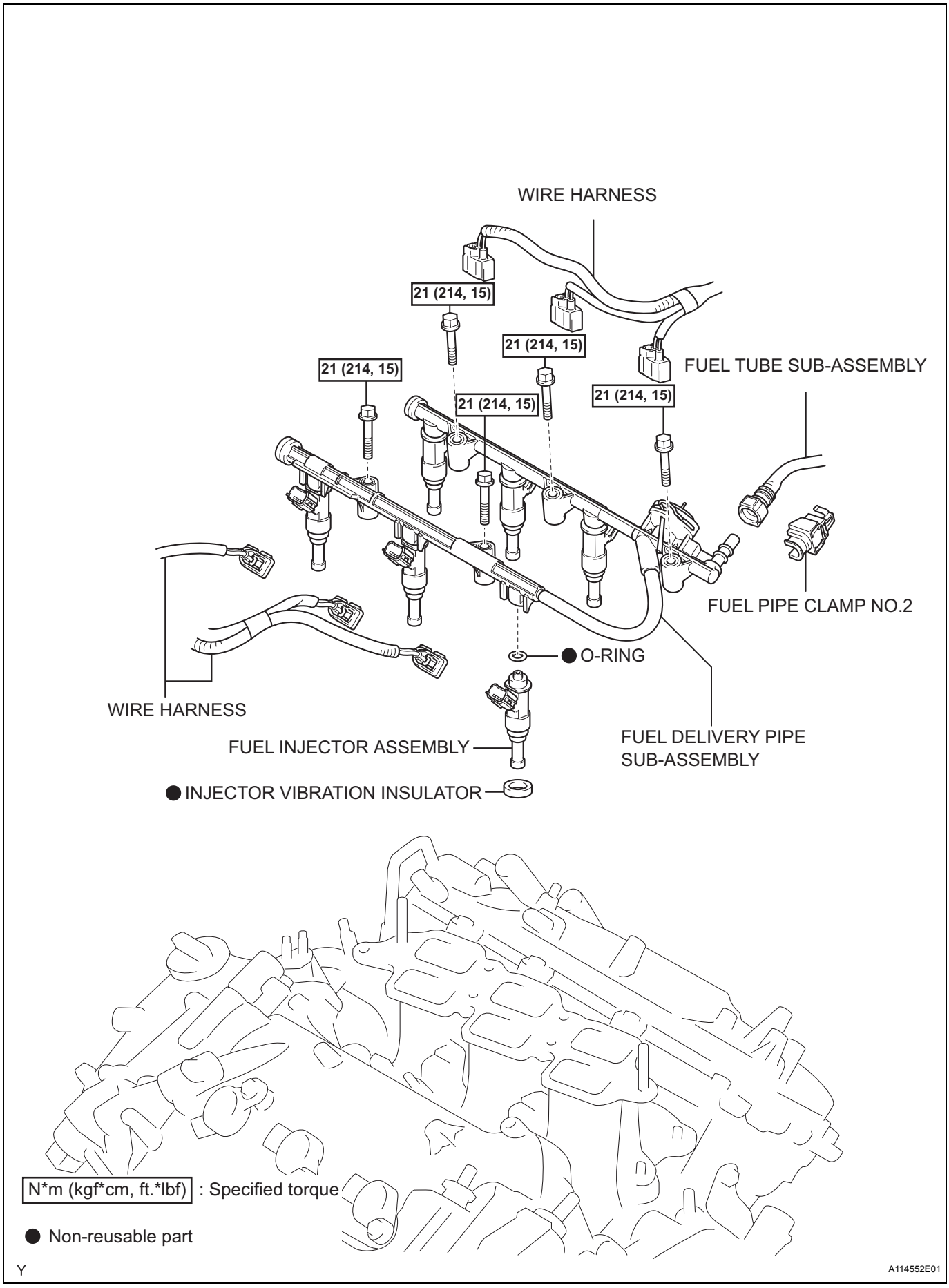
WIRE HARNESS
21 (214, 15)
21 (214, 15)
21 (214, 15)
21 (214, 15)
21 (214, 15)
FUEL TUBE SUB-ASSEMBLY
FUEL PIPE CLAMP NO.2
O-RING
WIRE HARNESS
FUEL INJECTOR ASSEMBLY
FUEL DELIVERY PIPE SUB-ASSEMBLY
INJECTOR VIBRATION INSULATOR
N*m (kgf*cm, ft.*lbf) : Specified torque
Non-reusable part
Y
A114552E01

FU

REMOVAL

1. **PREVENT GASOLINE FROM SPILLING OUT**
2. **DISCONNECT BATTERY NEGATIVE TERMINAL**
3. **DRAIN ENGINE COOLANT (See page CO-7)**
4. **REMOVE WINDSHIELD WIPER ARM AND BLADE ASSEMBLY LH (See page WW-38)**
5. **REMOVE WINDSHIELD WIPER ARM AND BLADE ASSEMBLY RH (See page WW-38)**
6. **REMOVE COWL TOP VENTILATOR LOUVER RH (See page WW-38)**
7. **REMOVE WINDSHIELD WIPER MOTOR & LINK ASSEMBLY (See page WW-38)**
8. **REMOVE COWL TOP PANEL OUTER (See page BR-20)**
9. **REMOVE V-BANK COVER SUB-ASSEMBLY**
   (a) Disengage the 3 clips and remove the v-bank cover.
   NOTICE:
   Be sure to disengage the clips in the order from A to B.

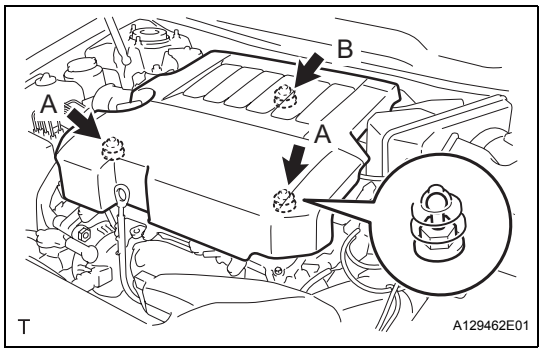

10. **REMOVE AIR CLEANER CAP WITH AIR CLEANER HOSE**
    (a) Disconnect the 3 vacuum hoses.
    (b) Disconnect the ventilation hose No.1.
    (c) Disconnect the air flow meter connector.
    (d) Separate the fuel vapor feed hose No.1.
    (e) Loosen the hose clamp bolt.
    (f) Remove the 3 clamps and air cleaner cap with air cleaner hose.

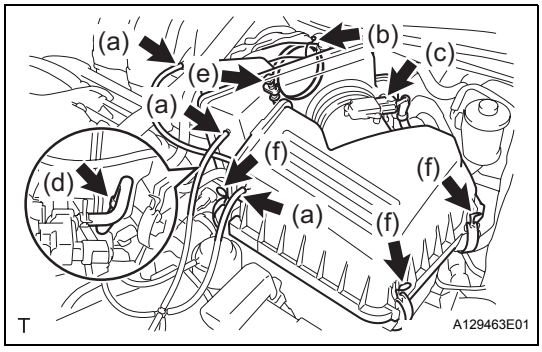

11. **REMOVE INTAKE AIR SURGE TANK**
    (a) Disconnect the 2 water by-pass hoses from the throttle w/ motor body assembly.
    (b) Disconnect the vapor feed hose.
    (c) Disconnect the throttle w/ motor body assembly connector and clamp.

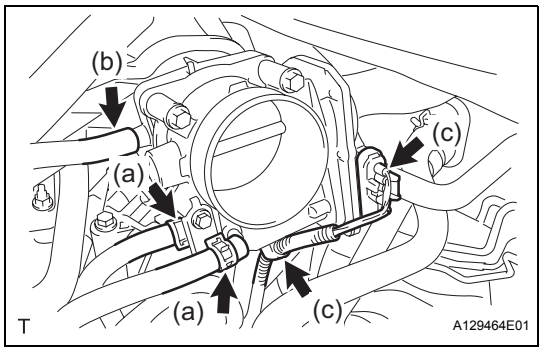

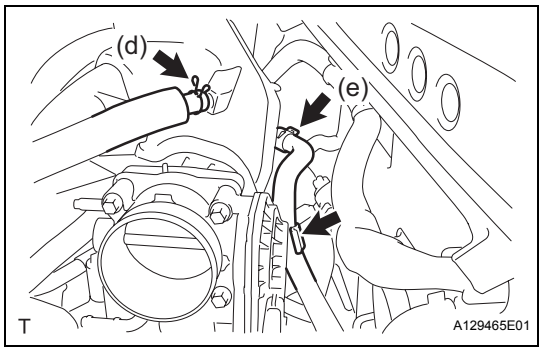

(d) Disconnect the ventilation hose No.2.
(e) Disconnect the union to check valve hose.

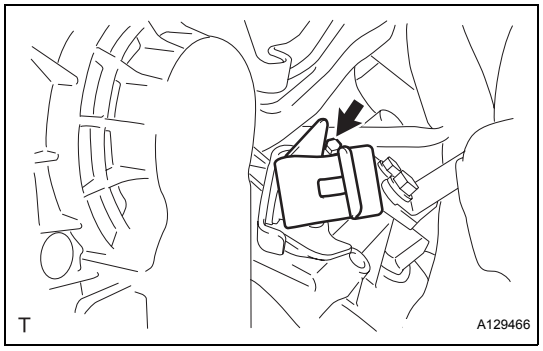

(f) Remove the bolt and vacuum hose clamp.

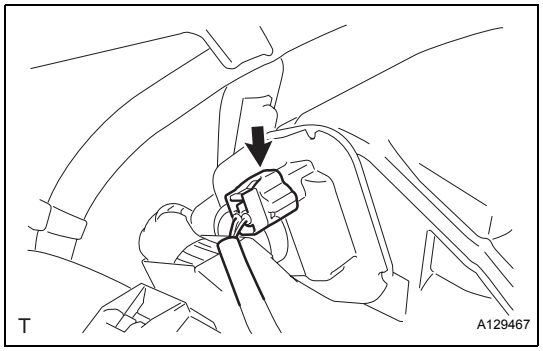

(g) Disconnect the connector.

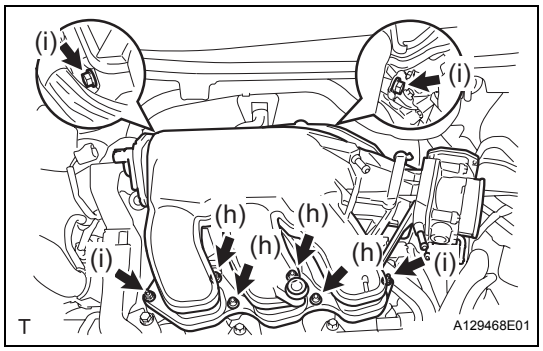

(h) Using a 5 mm socket hexagon wrench, remove the 4 bolts.
(i) Remove the 2 nuts, 2 bolts and intake air surge tank.
(j) Remove the gasket from the intake air surge tank.

FU

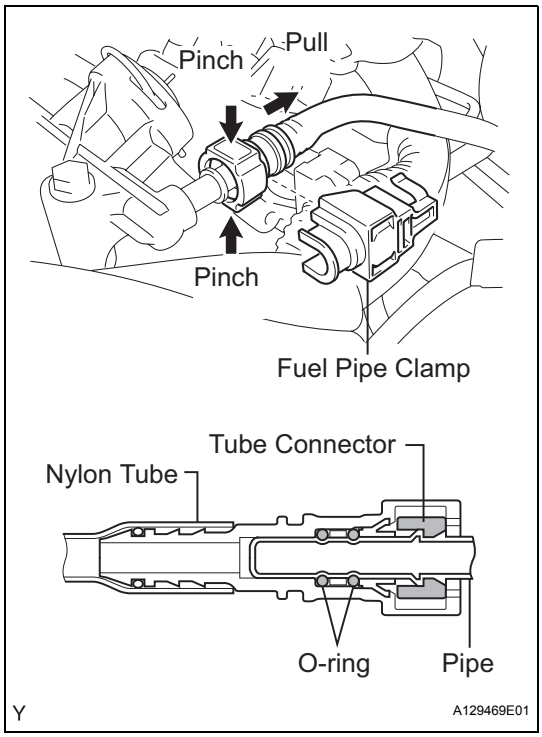

12. DISCONNECT FUEL TUBE SUB-ASSEMBLY

(a) Remove the fuel pipe clamp No.2.

(b) Pinch the tube connector and then pull out the fuel pipe.

NOTICE:

- **Check that there is no dirt or other foreign objects around the connector before this operation and clean the connector as necessary.**
- **Be careful of mud because the quick connector has O-rings which seal the pipe and connector that can be contaminated.**
- **Do not use any tools in this operation.**
- **Do not bend or twist the nylon tube. Protect the connector by covering it with a plastic bag.**
- **When the pipe and the connector are stuck, push and pull the connector to release and pull the connector out carefully.**

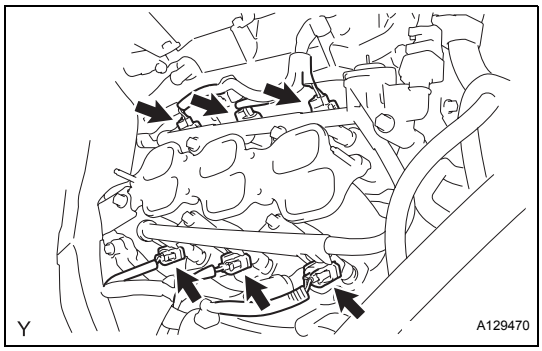

13. REMOVE FUEL INJECTOR ASSEMBLY

(a) Disconnect the 6 fuel injector connectors.

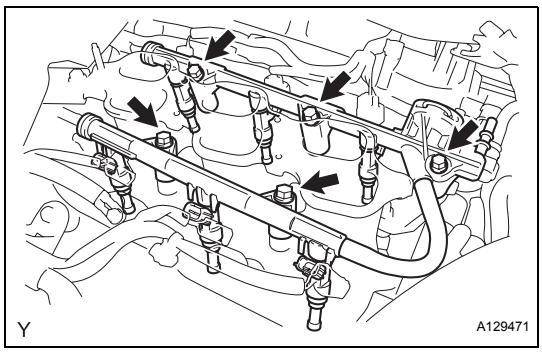

(b) Remove the 5 bolts and fuel delivery pipe together with the 6 fuel injectors.

NOTICE:

Be careful not to drop the fuel injectors when removing the fuel delivery pipe.

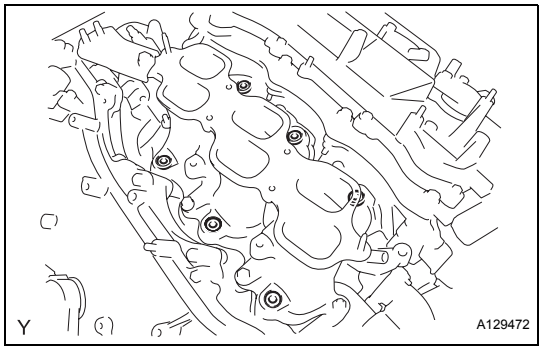

(c) Remove the 6 insulators from the intake manifold.

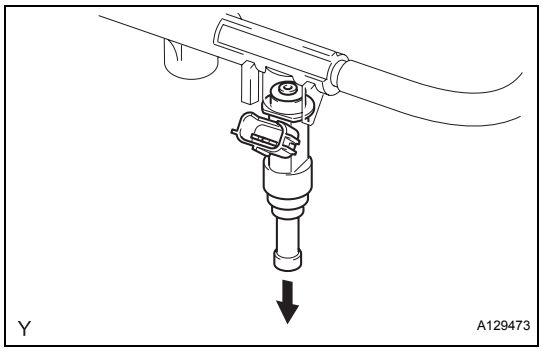

(d) Pull out the fuel injector from the fuel delivery pipe.

INSPECTION

1. INSPECT FUEL INJECTOR ASSEMBLY

(a) Inspect injector resistance.

(1) Using an ohmmeter, measure the resistance between the terminals.

Resistance:

11.6 to 12.4 Ω at 20°C (68°F)

If the resistance is not as specified, replace the injector.

(b) Inspect the injection volume.

CAUTION:

This test involves high - pressure fuel and electricity. Take every precaution regarding safe handling of both the fuel and the electricity. Perform this test in a safe area, and avoid any sparks or flames. Do not smoke.

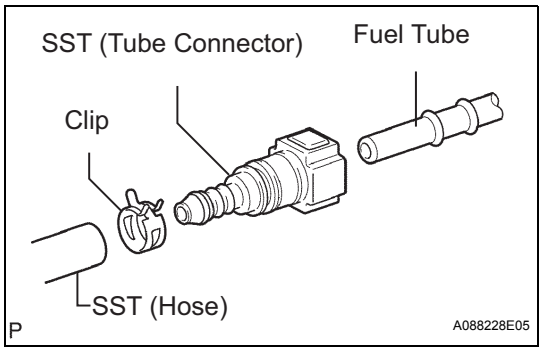

(1) Install the fuel tube connector to SST (hose), then connect the tube connector to the fuel pipe (vehicle side).

SST 09268-41048 (95336-08070, 09268-41500)

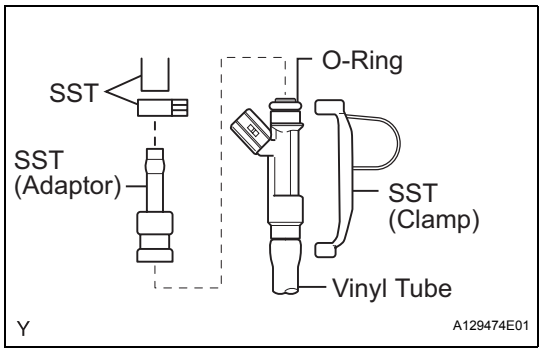

(2) Install the O-ring to the fuel injector.

(3) Connect SST (adaptor and hose) to the injector, and hold the injector and union with SST (clamp).

SST 09268-41048 (09268-41130, 90467-13001), 09268-41400

(4) Put the injector into the graduated cylinder.

CAUTION:

Install a suitable vinyl tube onto the injector to contain gasoline spray.

(5) Operate the fuel pump (See page FU-7).

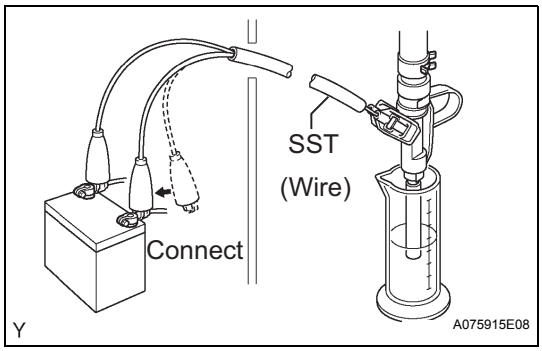

(6) Connect SST (wire) to the injector and the battery for 15 seconds, and measure the injection volume with the graduated cylinder. Test each injector 2 or 3 times.

SST 09842-30080

Volume:

84 to 100 cm^3(5.1 to 6.0 cu in.) in 15 seconds

Difference between each injector:

16 cm^3(0.96 cu in.) or less

If the injection volume is not as specified, replace the injector.

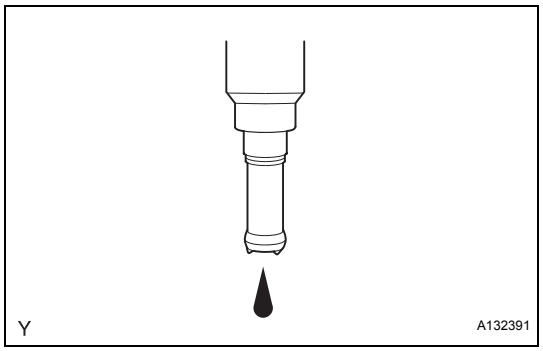

(c) Check for leakage.
(1) In the condition above, disconnect the tester probes of SST (wire) from the battery and check for fuel leakage from the injector.
Fuel drop:
1 drop or less in 16 minutes

INSTALLATION

1. INSTALL FUEL INJECTOR ASSEMBLY

(a) Apply a light coat of spindle oil or gasoline to new O-rings, and install it to each injector.

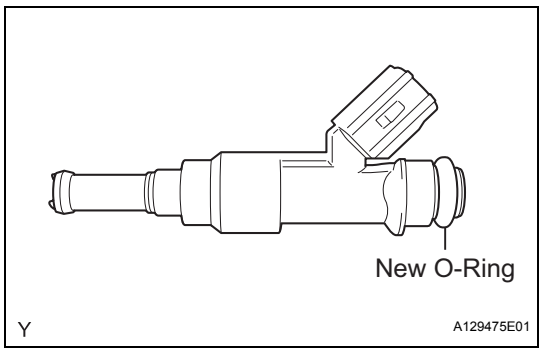

(b) Apply a light coat of spindle oil or gasoline where the fuel delivery pipe contacts the O-ring.
(c) Push the fuel injector while twisting it back and forth to install it in the fuel delivery pipe.
(d) Position the fuel injector connector outward.
NOTICE:
- **Be careful not to twist the O-ring.**
- **After installing the fuel injector, check that it turns smoothly. if not, reinstall it with a new O-ring.**

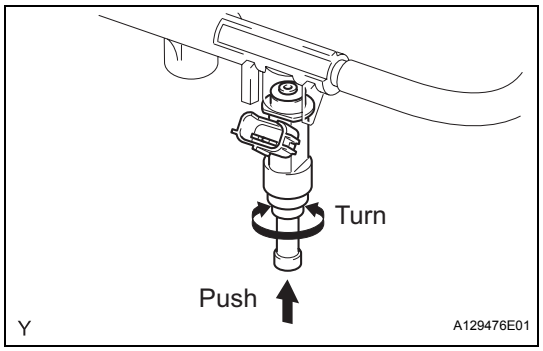

(e) Install 6 new insulators to the intake manifold.

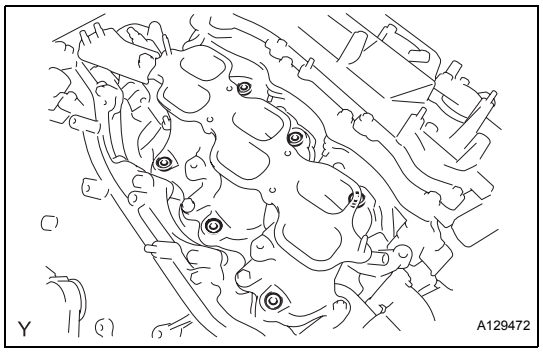

(f) Place the fuel delivery pipe and the 6 fuel injectors together to the intake manifold.
NOTICE:
Be careful not to drop the fuel injectors when installing the fuel delivery pipe.
(g) Temporarily install the 6 bolts which are used to hold the fuel delivery pipe to the intake manifold.
NOTICE:
After installing the fuel injector, check that it turns smoothly. If not, reinstall it with a new O-ring.

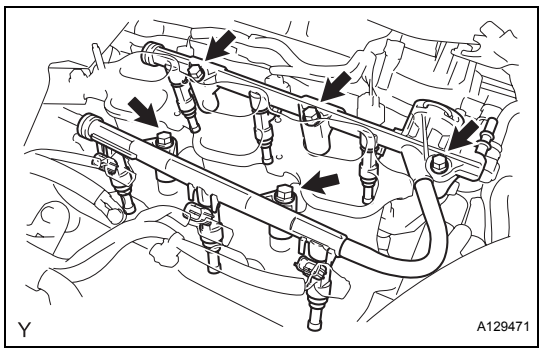

(h) Tighten the 5 bolts which are used to hold the fuel delivery pipe to the intake manifold.
Torque: 21 N*m (214 kgf*cm, 15 ft.*lbf)

(i) Connect the 6 fuel injector connectors.

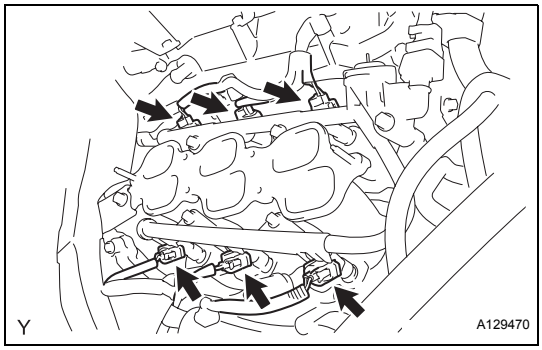

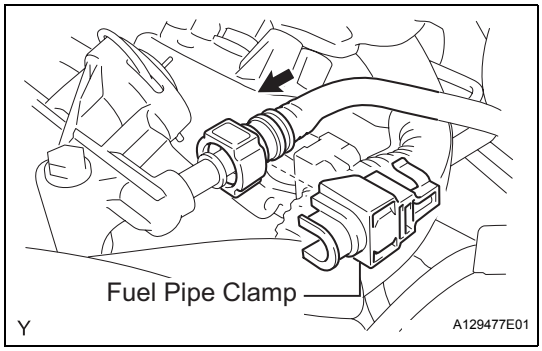

2. CONNECT FUEL TUBE SUB-ASSEMBLY

(a) Push in the tube connector to the pipe until the tube connector makes a "click" sound.
NOTICE:
- **Check that there is no damage or foreign objects on the connected part of the fuel pipe.**
- **After connecting, check if the fuel tube connector and the pipe are securely connected by pulling on them.**

(b) Install the fuel pipe clamp No.2.

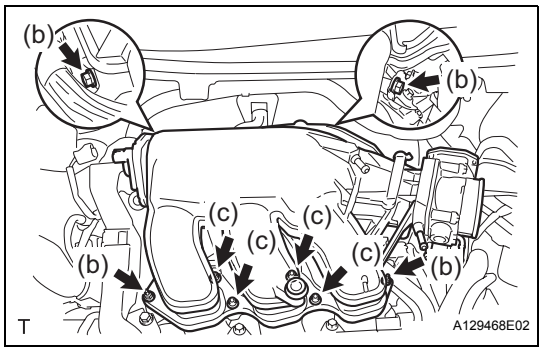

3. INSTALL INTAKE AIR SURGE TANK ASSEMBLY

(a) Install a new gasket to the intake air surge tank.

(b) Using a 5 mm hexagon socket wrench, install the 4 bolts.
Torque: 18 N*m (184 kgf*cm, 13 ft.*lbf)

(c) Install the intake air surge tank with the 2 nuts and 2 bolts.
Torque: Nut
16 N*m (163 kgf*cm, 12 ft.*lbf)
Bolt
21 N*m (214 kgf*cm, 15 ft.*lbf)

(d) Connect the connector.

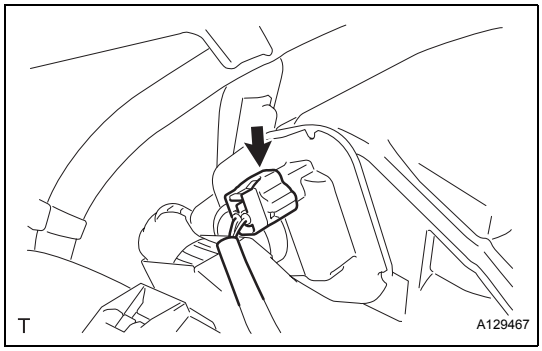

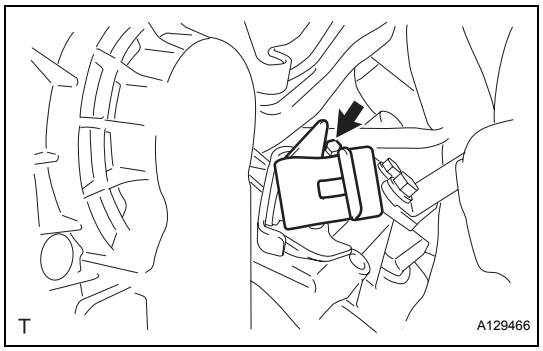

(e) Install the vacuum hose clamp with the bolt.
Torque: 5.4 N*m (55 kgf*cm, 48 in.*lbf)

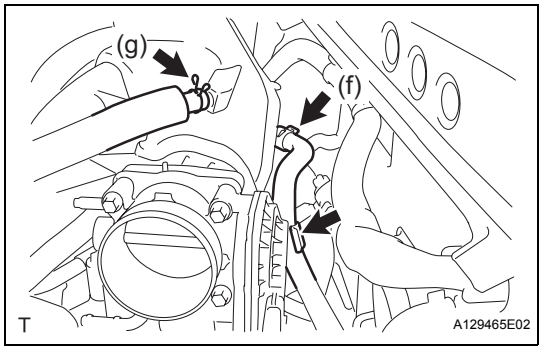

(f) Connect the union to check valve hose.
(g) Connect the ventilation hose No.2.

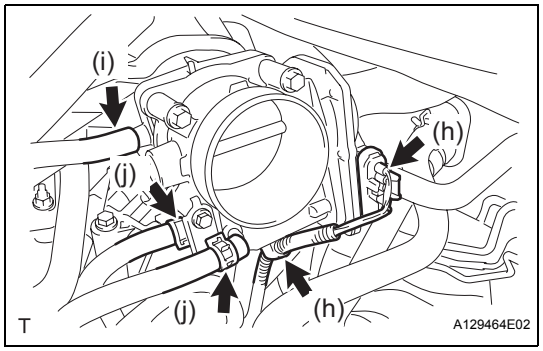

(h) Install the clamp and connect the throttle w/ motor body assembly connector.
(i) Connect the vapor feed hose.
(j) Connect the 2 water by-pass hoses to the throttle w/ motor body assembly.

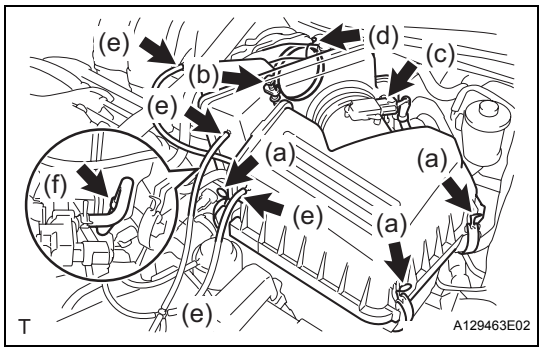

4. **INSTALL AIR CLEANER CAP WITH AIR CLEANER HOSE**
   (a) Install the 3 clamps and air cleaner cap with air cleaner hose.
   (b) Tighten the hose clamp bolt.
   Torque: 5.0 N*m (51 kgf*cm, 44 in.*lbf)
   (c) Connect the air flow meter connector.
   (d) Connect the ventilation hose No.1.
   (e) Connect the 3 vacuum hoses.
   (f) Connect the fuel vapor feed hose No.1.
5. **INSTALL COWL TOP PANEL OUTER (See page BR-23)**
6. **INSTALL WINDSHIELD WIPER MOTOR & LINK ASSEMBLY (See page WW-40)**
7. **INSTALL COWL TOP VENTILATOR LOUVER RH**
8. **INSTALL WINDSHIELD WIPER ARM AND BLADE ASSEMBLY RH (See page WW-40)**
9. **INSTALL WINDSHIELD WIPER ARM AND BLADE ASSEMBLY LH (See page WW-41)**

FU

10. **ADD ENGINE COOLANT (See page CO-7)**
11. **CONNECT BATTERY NEGATIVE TERMINAL**
12. **CHECK FOR ENGINE COOLANT LEAKS (See page CO-8)**
13. **CHECK FOR FUEL LEAKS (See page FU-7)**
14. **INSTALL V-BANK COVER SUB-ASSEMBLY**
    (a) Engage the 3 clips and install the v-bank cover.
    NOTICE:
    Be sure to engage the clips in the order from A to B.
15. **PERFORM INITIALIZATION**
    (a) Some systems need initialization when disconnecting the battery terminal.

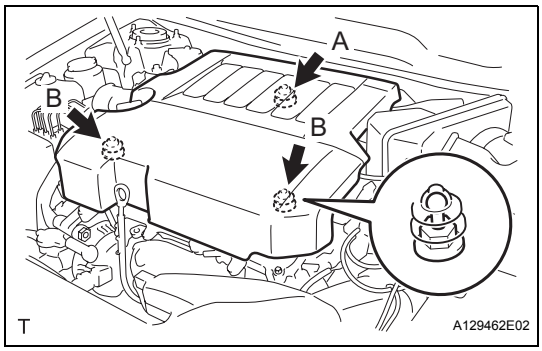

FUEL PRESSURE PULSATION DAMPER

COMPONENTS

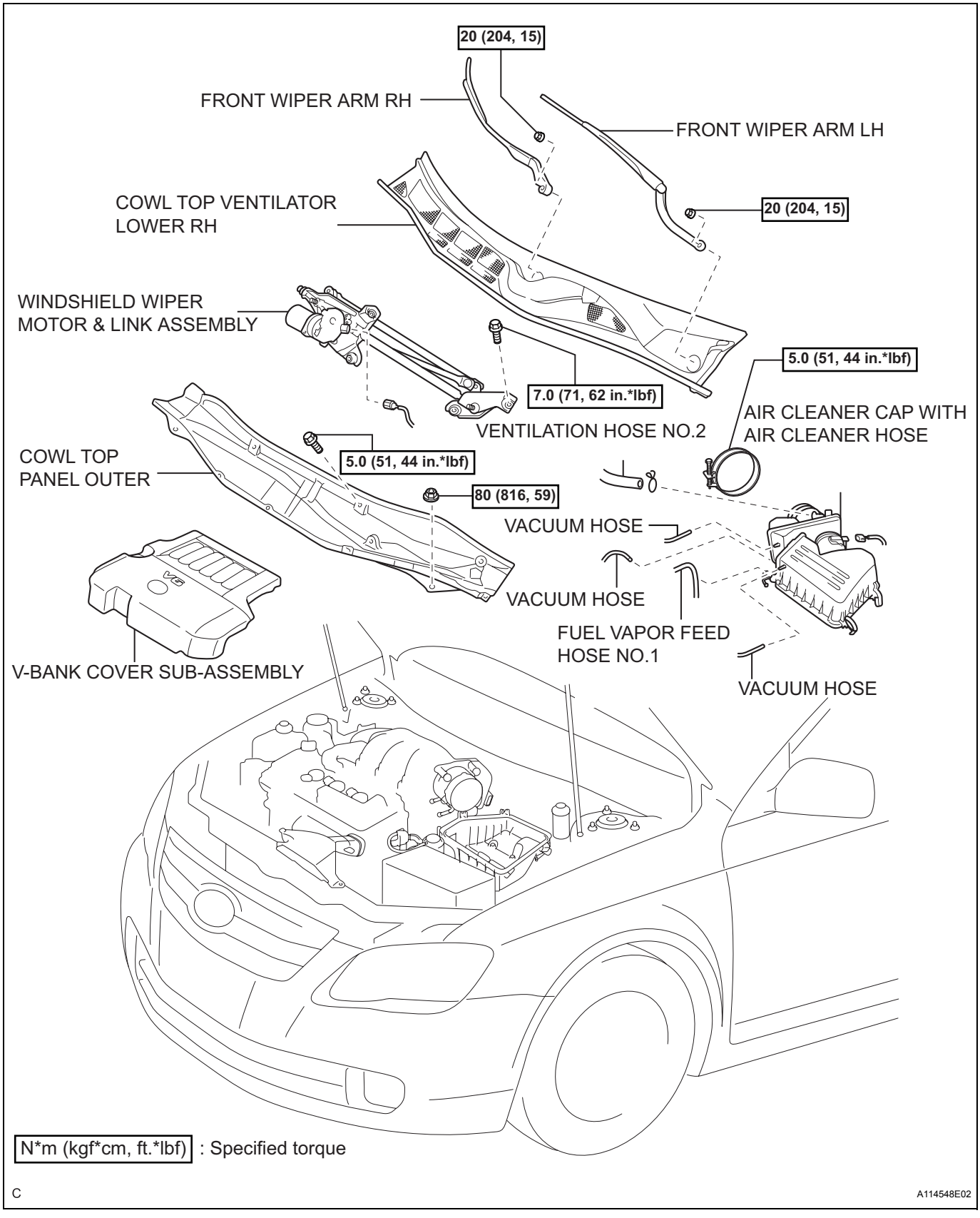

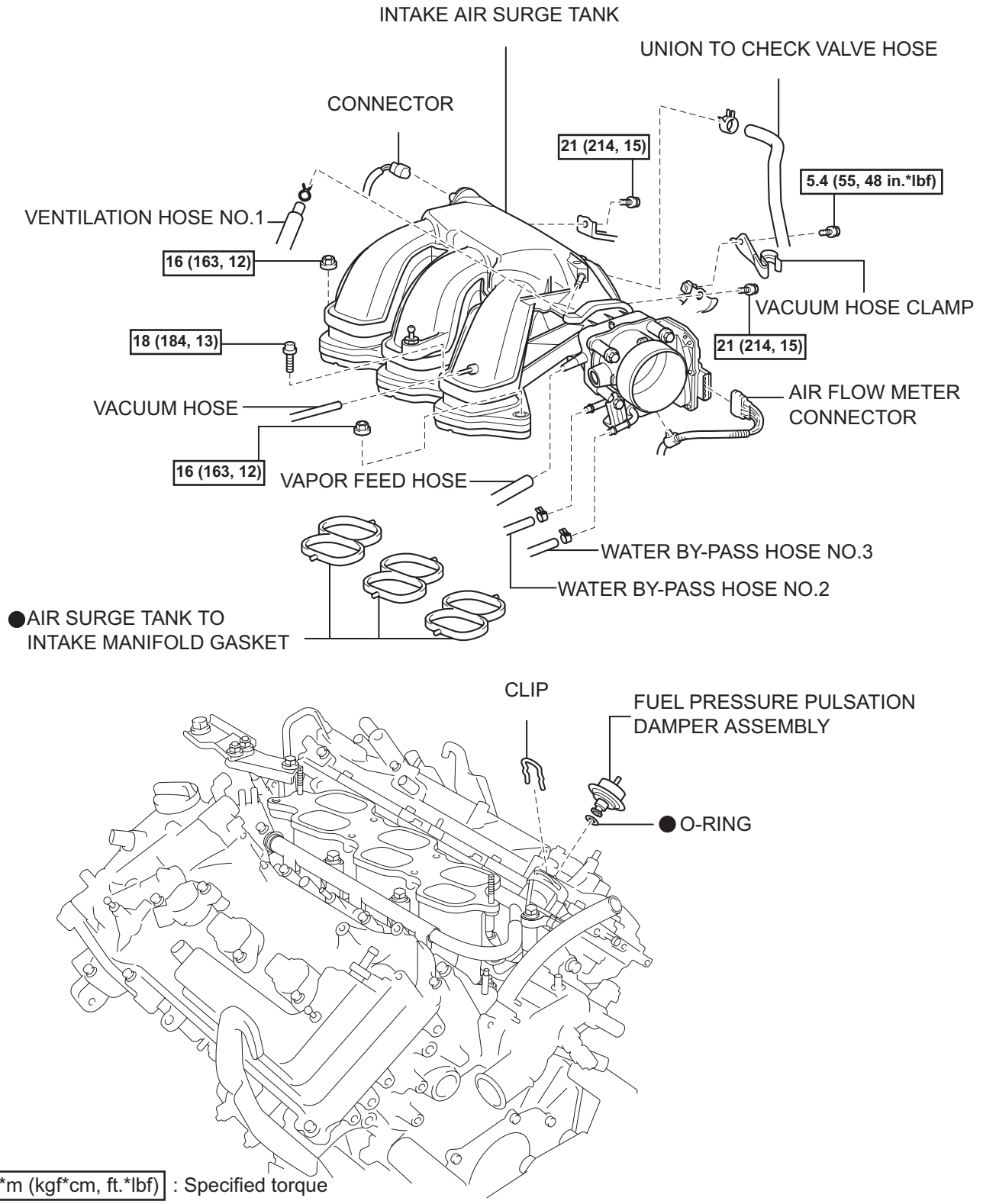
INTAKE AIR SURGE TANK
UNION TO CHECK VALVE HOSE
CONNECTOR
21 (214, 15)
5.4 (55, 48 in.*lbf)
VENTILATION HOSE NO.1
16 (163, 12)
VACUUM HOSE CLAMP
18 (184, 13)
21 (214, 15)
AIR FLOW METER CONNECTOR
VACUUM HOSE
16 (163, 12)
VAPOR FEED HOSE
WATER BY-PASS HOSE NO.3
WATER BY-PASS HOSE NO.2
● AIR SURGE TANK TO INTAKE MANIFOLD GASKET
CLIP
FUEL PRESSURE PULSATION DAMPER ASSEMBLY
● O-RING
N*m (kgf*cm, ft.*lbf) : Specified torque
● Non-reusable part
C
A114553E01

FU

REMOVAL

1. **PREVENT GASOLINE FROM SPILLING OUT**
2. **DISCONNECT BATTERY NEGATIVE TERMINAL**
3. **DRAIN ENGINE COOLANT (See page CO-7)**
4. **REMOVE WINDSHIELD WIPER ARM AND BLADE ASSEMBLY LH (See page WW-38)**
5. **REMOVE WINDSHIELD WIPER ARM AND BLADE ASSEMBLY RH (See page WW-38)**
6. **REMOVE COWL TOP VENTILATOR LOUVER RH (See page WW-38)**
7. **REMOVE WINDSHIELD WIPER MOTOR & LINK ASSEMBLY (See page WW-38)**
8. **REMOVE COWL TOP PANEL OUTER (See page BR-20)**
9. **REMOVE V-BANK COVER SUB-ASSEMBLY (See page FU-12)**
10. **REMOVE AIR CLEANER CAP WITH AIR CLEANER HOSE (See page FU-12)**
11. **REMOVE INTAKE AIR SURGE TANK (See page FU-12)**
12. **REMOVE FUEL PRESSURE PULSATION DAMPER ASSEMBLY**
    (a) Remove the clip.
    (b) Pull out the fuel pressure pulsation damper from the fuel delivery pipe.

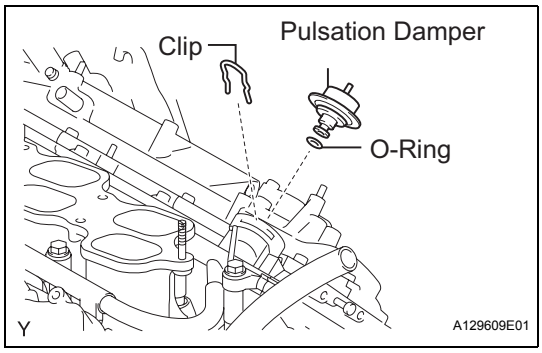

INSTALLATION

1. **INSTALL FUEL PRESSURE PULSATION DAMPER ASSEMBLY**
   (a) Apply a light coat of spindle oil or gasoline to a new O-ring and install it to the fuel pressure pulsation damper.
   (b) Install the fuel pressure pulsation damper to the fuel delivery pipe.
   (c) Install the clip.
2. **INSTALL INTAKE AIR SURGE TANK (See page FU-17)**
3. **INSTALL AIR CLEANER CAP WITH AIR CLEANER HOSE (See page FU-18)**
4. **INSTALL COWL TOP PANEL OUTER (See page BR-23)**
5. **INSTALL WINDSHIELD WIPER MOTOR & LINK ASSEMBLY (See page WW-40)**
6. **INSTALL COWL TOP VENTILATOR LOUVER RH**
7. **INSTALL WINDSHIELD WIPER ARM AND BLADE ASSEMBLY RH (See page WW-40)**
8. **INSTALL WINDSHIELD WIPER ARM AND BLADE ASSEMBLY LH (See page WW-41)**
9. **ADD ENGINE COOLANT (See page CO-7)**
10. **CONNECT BATTERY NEGATIVE TERMINAL**
11. **CHECK FOR ENGINE COOLANT LEAKS (See page CO-8)**
12. **CHECK FOR FUEL LEAKS (See page FU-7)**
13. **INSTALL V-BANK COVER SUB-ASSEMBLY (See page FU-19)**
14. **PERFORM SYSTEM INITIALIZE**
    (a) Some systems need initialization when disconnecting the battery terminal.

FUEL PUMP

COMPONENTS

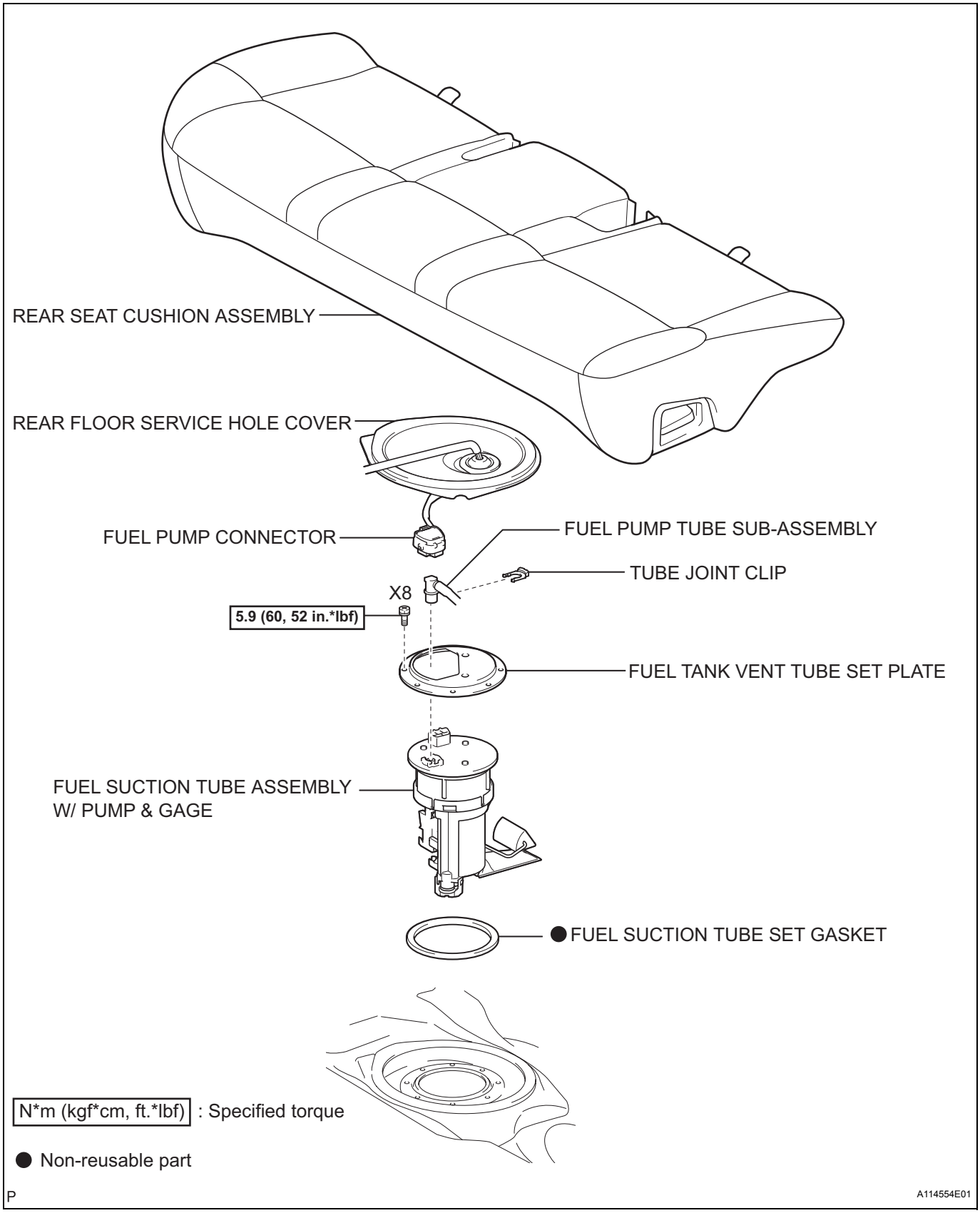

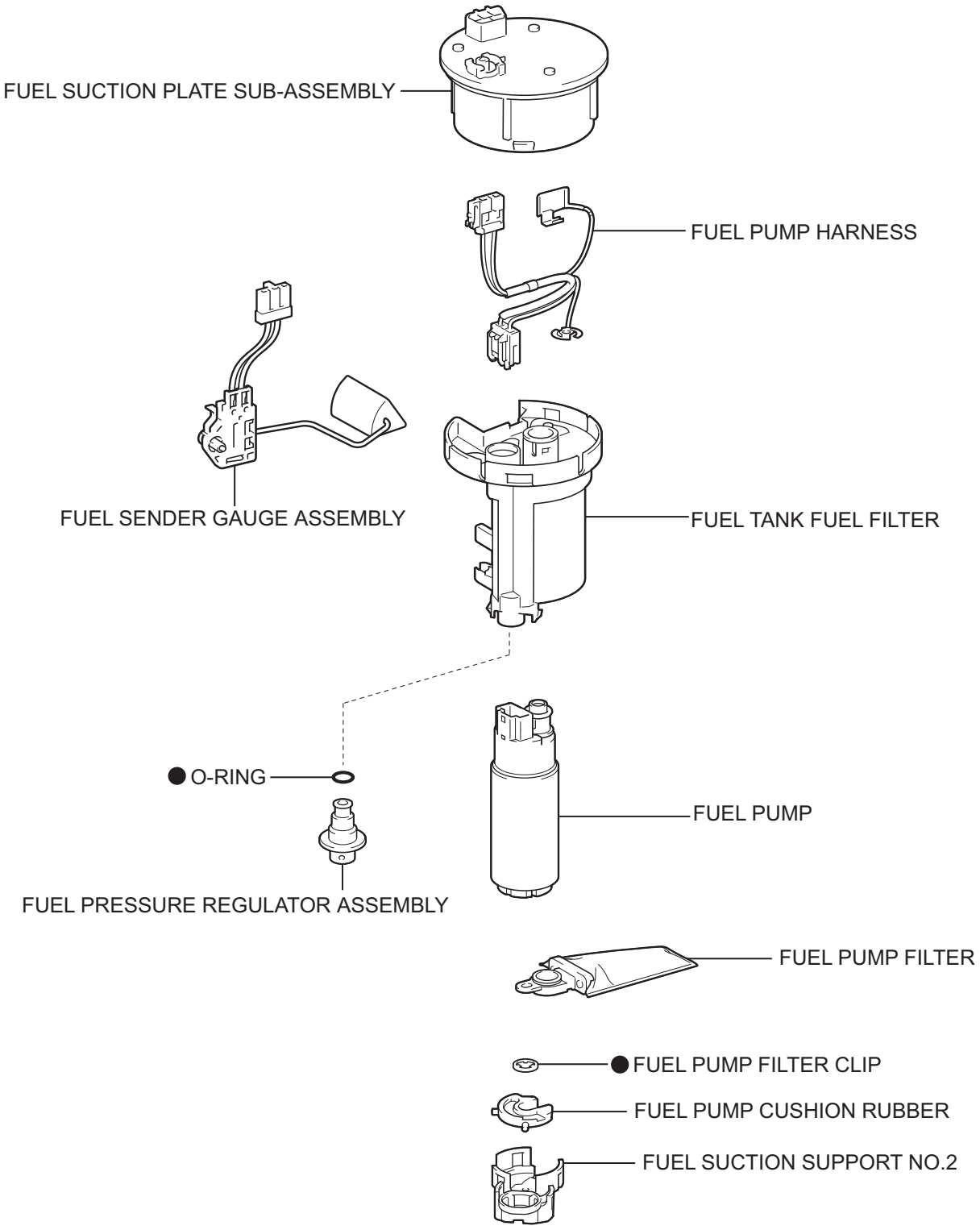

● Non-reusable part

P

A114555E01

FU

REMOVAL

1. **PREVENT GASOLINE FROM SPILLING OUT**
2. **DISCONNECT BATTERY NEGATIVE TERMINAL**
3. **REMOVE REAR SEAT CUSHION ASSEMBLY (See page SE-68)**
4. **REMOVE REAR FLOOR SERVICE HOLE COVER**
   (a) Remove the rear floor service hole cover.
   (b) Disconnect the fuel pump connector.

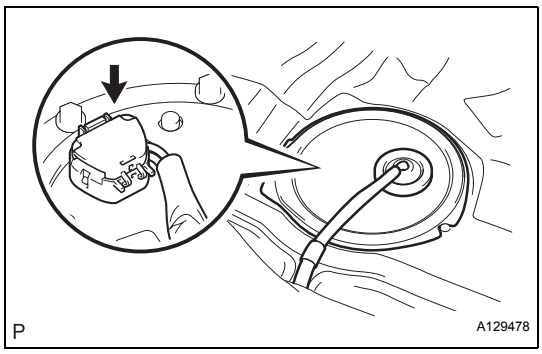

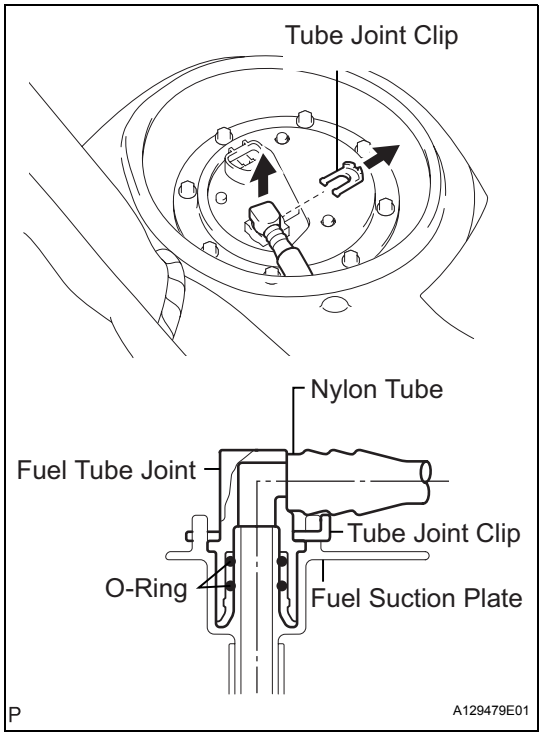

5. **SEPARATE FUEL PUMP TUBE SUB-ASSEMBLY**
   (a) Remove the tube joint clip, and pull out the fuel pump tube.
   NOTICE:
   - **Check that there is no dirt around the fuel tube joint before this work and clean the dirt away.**
   - **Be careful of dirt like mud because the fuel tube joint has O-rings to seal the fuel tube connector and fuel suction plate.**
   - **Do not use any tools in this work.**
   - **Do not bend or twist the nylon tube by force.**
   - **After disconnecting, cover the fuel tube joint with a plastic bag.**
   - **When the fuel tube joint and fuel suction plate are stuck, pinch the fuel tank tube between fingers, and turn it carefully to release. Disconnect the fuel tank tube.**

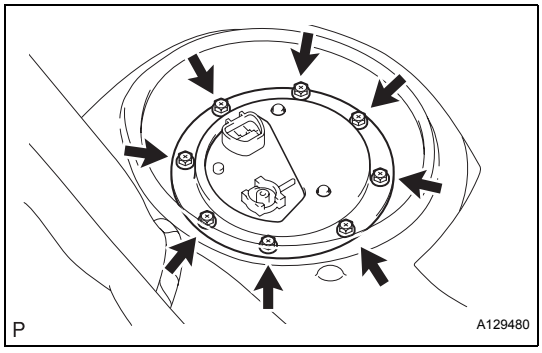

6. **REMOVE FUEL TANK VENT TUBE SET PLATE**
   (a) Remove the 8 bolts and set plate.

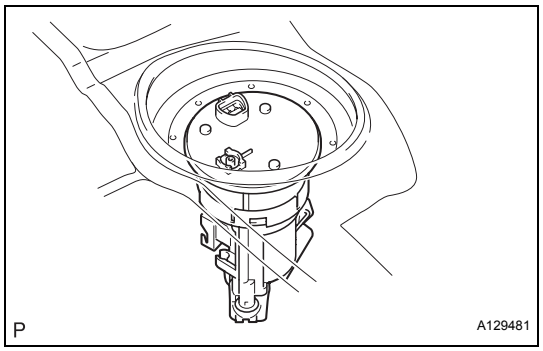

7. REMOVE FUEL SUCTION TUBE ASSEMBLY WITH PUMP AND GAUGE

(a) Pull out the fuel suction tube from the fuel tank.
NOTICE:
- **Do not damage the fuel pump filter.**
- **Be careful that the arm of the sender gauge should not bend.**

(b) Remove the gasket from the fuel suction tube.

DISASSEMBLY

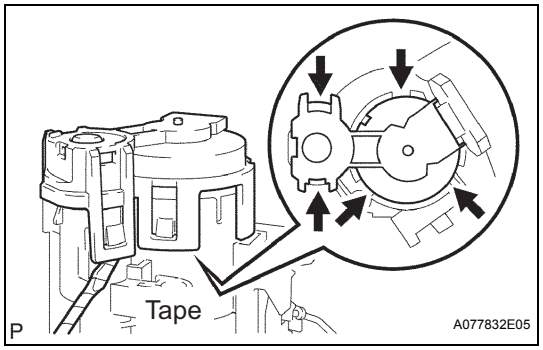

1. REMOVE FUEL SUCTION SUPPORT NO.2

(a) Using a screwdriver with its tip wrapped with tape, disengage the 5 snap claws from the claw holes, and remove the fuel suction support.
NOTICE:
Do not damage the fuel suction support.

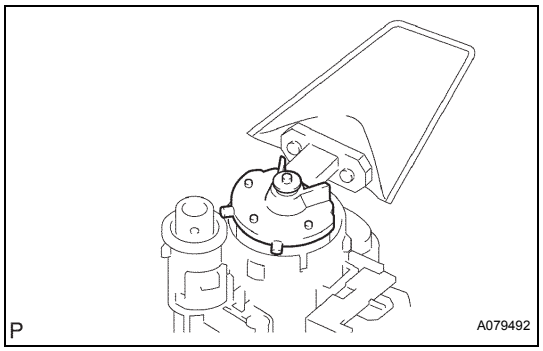

2. REMOVE FUEL PUMP CUSHION RUBBER

(a) Remove the fuel pump cushion rubber from the fuel pump.

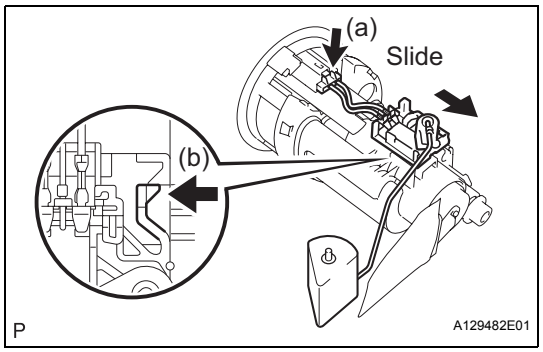

3. REMOVE FUEL SENDER GAUGE ASSEMBLY

(a) Disconnect the fuel sender gauge connector.
(b) Unlock the fuel sender gauge, and slide it to remove.

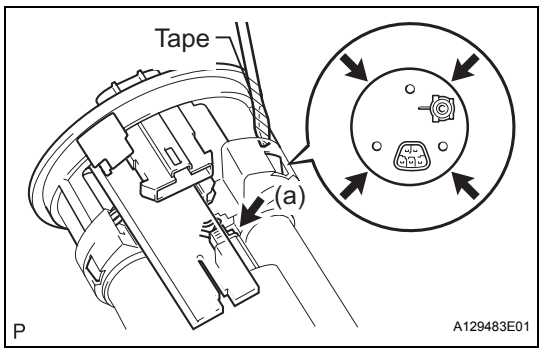

4. REMOVE FUEL SUCTION PLATE SUB-ASSEMBLY

(a) Disconnect the fuel pump connector.
(b) Using a screwdriver with its tip wrapped with tape, disengage the 4 snap claws from the claw holes, and pull out the fuel suction plate.
NOTICE:
Do not damage the fuel suction support.

FU

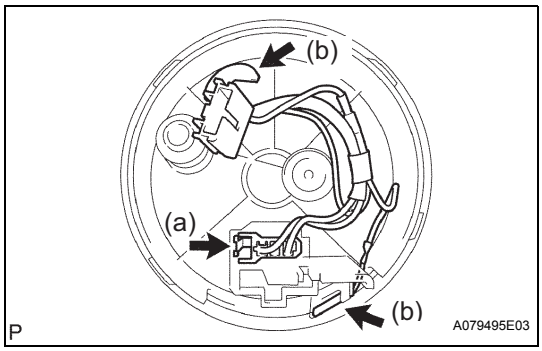

5. REMOVE FUEL PUMP HARNESS

(a) Disconnect the connector.

(b) Using a screwdriver, pry out the fuel pump harness.

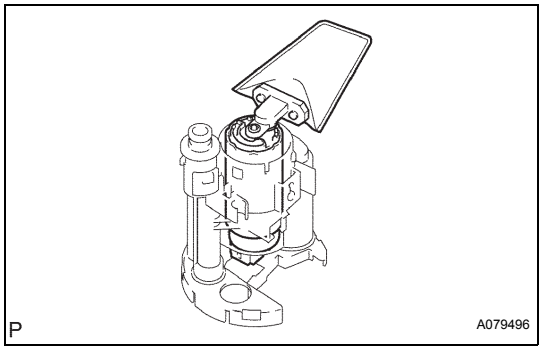

6. REMOVE FUEL PUMP

(a) Pull out the fuel pump from the fuel tank fuel filter.

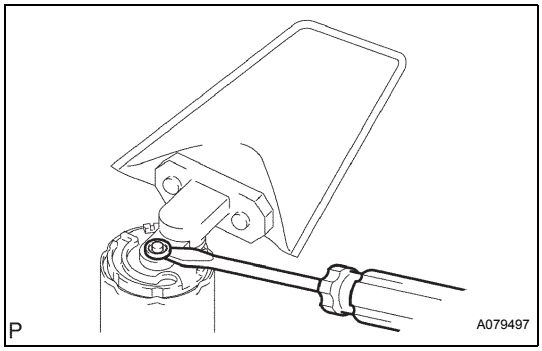

7. REMOVE FUEL PUMP FILTER

(a) Using a screwdriver, pry out the clip.

(b) Pull out the fuel pump filter from the fuel pump.

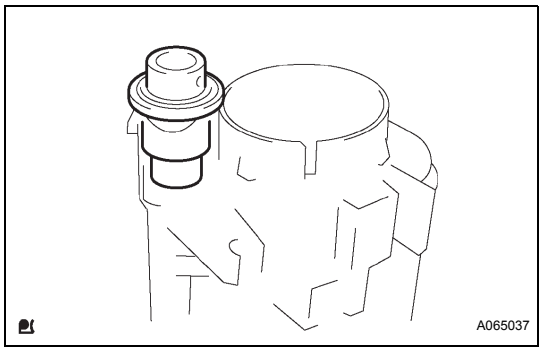

8. REMOVE FUEL PRESSURE REGULATOR ASSEMBLY

(a) Pull out the fuel pressure regulator from the fuel tank fuel filter.

(b) Remove the O-ring from the fuel pressure regulator.

INSPECTION

1. INSPECT FUEL PUMP

(a) Inspect fuel pump resistance.

(1) Using an ohmmeter, measure the resistance between the terminals.

Resistance:

0.2 to 3.0 Ω at 20°C (68°F)

If the result is not as specified, replace the fuel pump assembly.

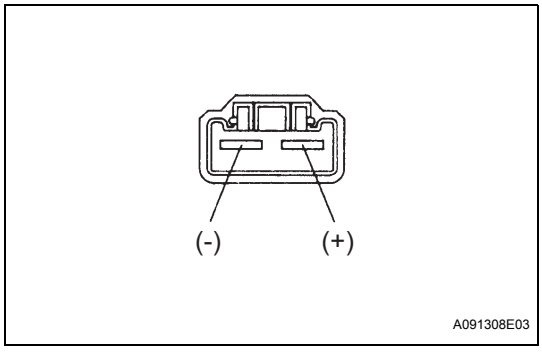

(b) Inspect fuel pump operation.
(1) Apply battery voltage to both the terminals. Check that the pump operates.
NOTICE:
- **These tests must be done quickly (within 10 seconds) to prevent damage to the pump.**
- **Keep fuel pump as far away from the battery as possible.**
- **Always switch at the battery side.**

If the pump does not operate, replace the fuel pump assembly.

REASSEMBLY

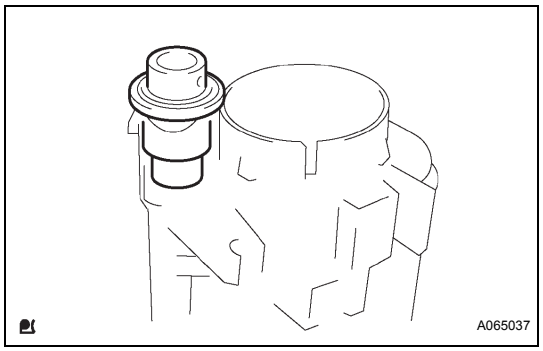

1. INSTALL FUEL PRESSURE REGULATOR ASSEMBLY
(a) Apply a light coat of spindle oil or gasoline to a new O-ring, and install it to the fuel pressure regulator.
(b) Push in the fuel pressure regulator to the fuel tank fuel filter.

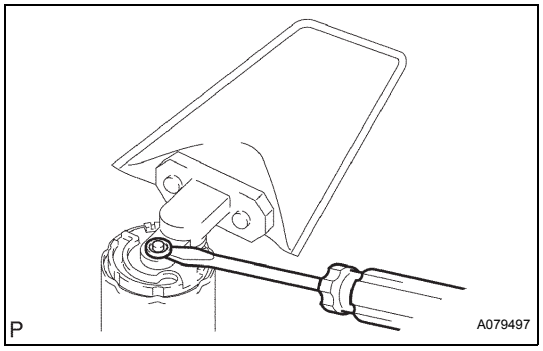

2. INSTALL FUEL PUMP FILTER
(a) Install the fuel pump filter with a new clip.

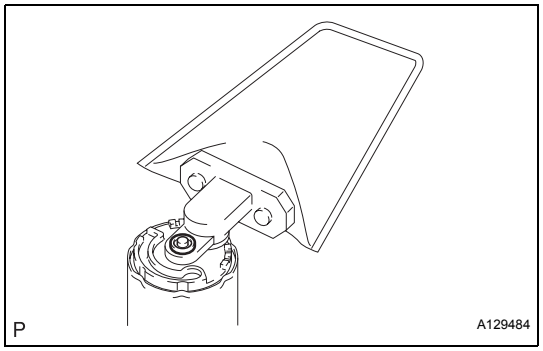

3. INSTALL FUEL PUMP
(a) Apply a light coat of gasoline or grease to the O-ring of the fuel pump.
(b) Push in the fuel pump to the fuel tank fuel filter.

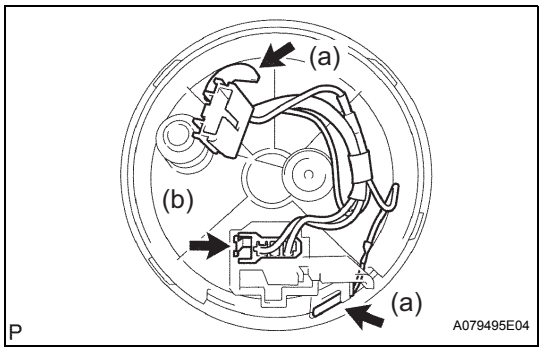

4. INSTALL FUEL PUMP HARNESS

(a) Install the fuel pump harness.
(b) Connect the connector.

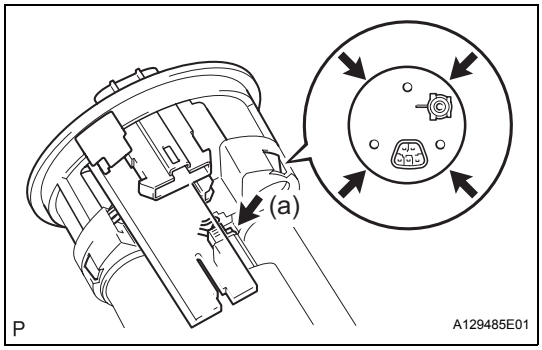

5. INSTALL FUEL SUCTION PLATE SUB-ASSEMBLY

(a) Install the fuel suction plate.
(b) Connect the fuel pump connector.

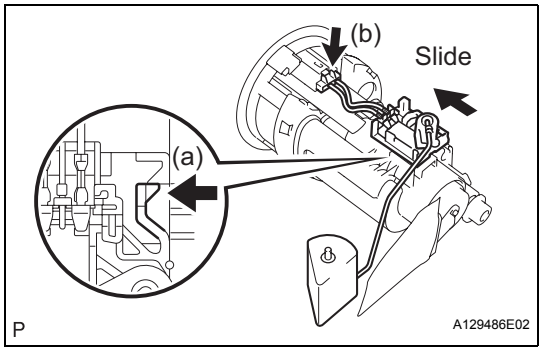

6. INSTALL FUEL SENDER GAUGE ASSEMBLY

(a) Slide the fuel sender gauge to engage with the claw.
(b) Connect the fuel sender gauge connector.

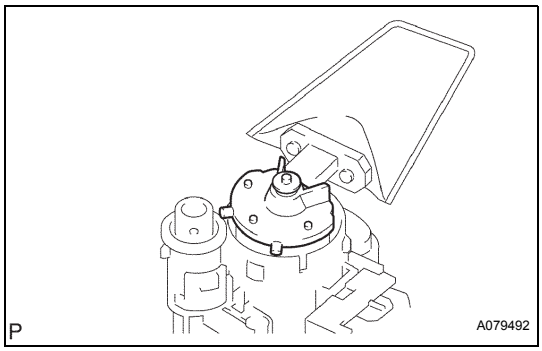

7. INSTALL FUEL PUMP CUSHION RUBBER

(a) Install the fuel pump cushion rubber to the fuel pump.

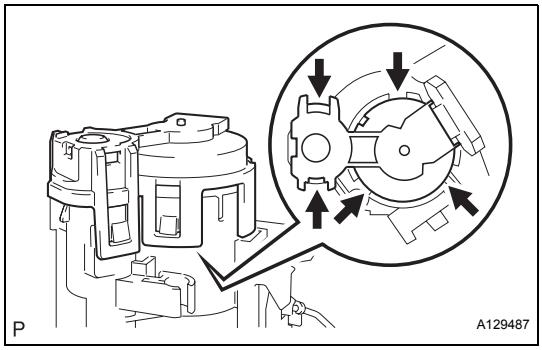

8. INSTALL FUEL SUCTION SUPPORT NO.2

(a) Install the fuel suction support No.2.

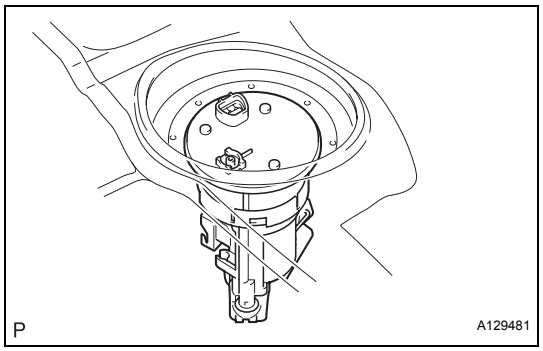

INSTALLATION

1. **INSTALL FUEL SUCTION TUBE ASSEMBLY WITH PUMP AND GAUGE**
   (a) Install a new gasket to the fuel suction tube.
   (b) Install the fuel suction tube.
   NOTICE:
   - **Do not damage the fuel pump filter.**
   - **Be careful that the arm of the sender gauge should not bend.**

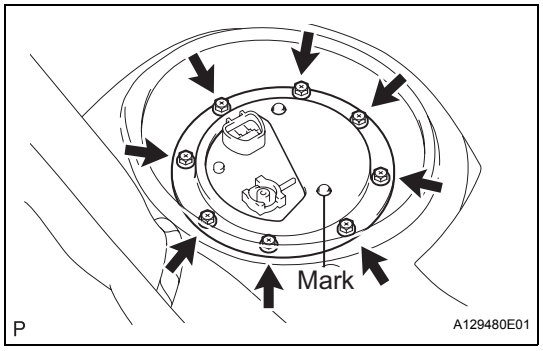

2. **INSTALL FUEL TANK VENT TUBE SET PLATE**
   (a) Align the mark of the set plate with the fuel suction tube.
   (b) Install the set plate with the 8 bolts.
   Torque: 5.9 N*m (60 kgf*cm, 52 in.*lbf)

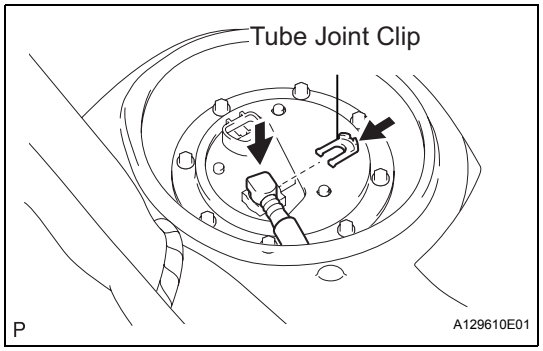

3. **CONNECT FUEL PUMP TUBE SUB-ASSEMBLY**
   (a) Install the fuel pump tube with the tube joint clip.
   NOTICE:
   - **Check that there is no scratches or foreign objects on the connecting part.**
   - **Check that the fuel tube joint is inserted securely.**
   - **Check that the tube joint clip is on the collar of the fuel tube joint.**
   - **After installing the tube joint clip, check that the fuel tube joint is pulled off.**
4. **CONNECT CABLE TO NEGATIVE BATTERY TERMINAL**
5. **CHECK FOR FUEL LEAKS (See page FU-7)**
6. **INSTALL REAR FLOOR SERVICE HOLE COVER**
7. **INSTALL REAR SEAT CUSHION ASSEMBLY**
8. **PERFORM SYSTEM INITIALIZE**
   (a) Some systems need initialization when disconnecting the battery terminal.

FU

FUEL TANK

COMPONENTS

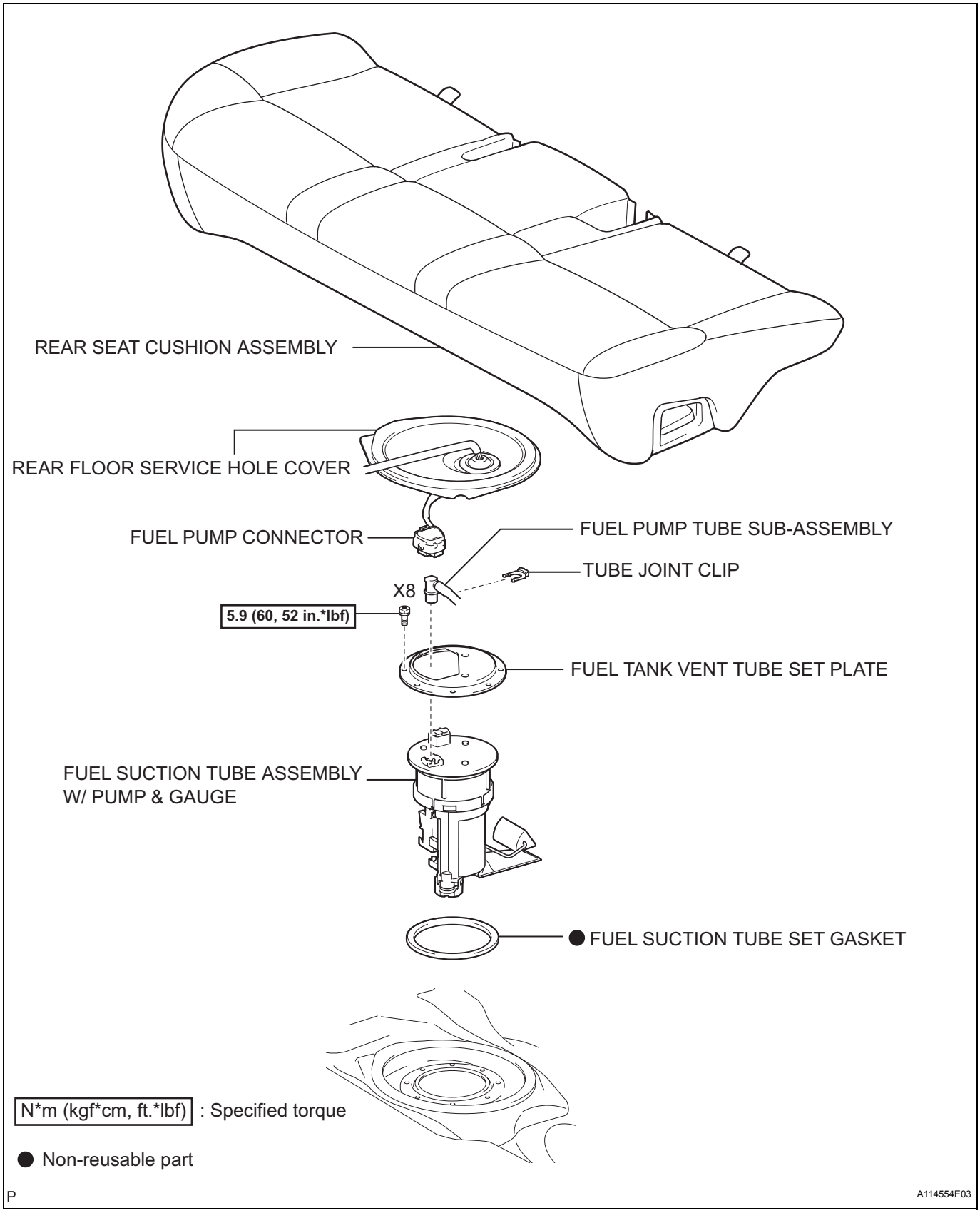

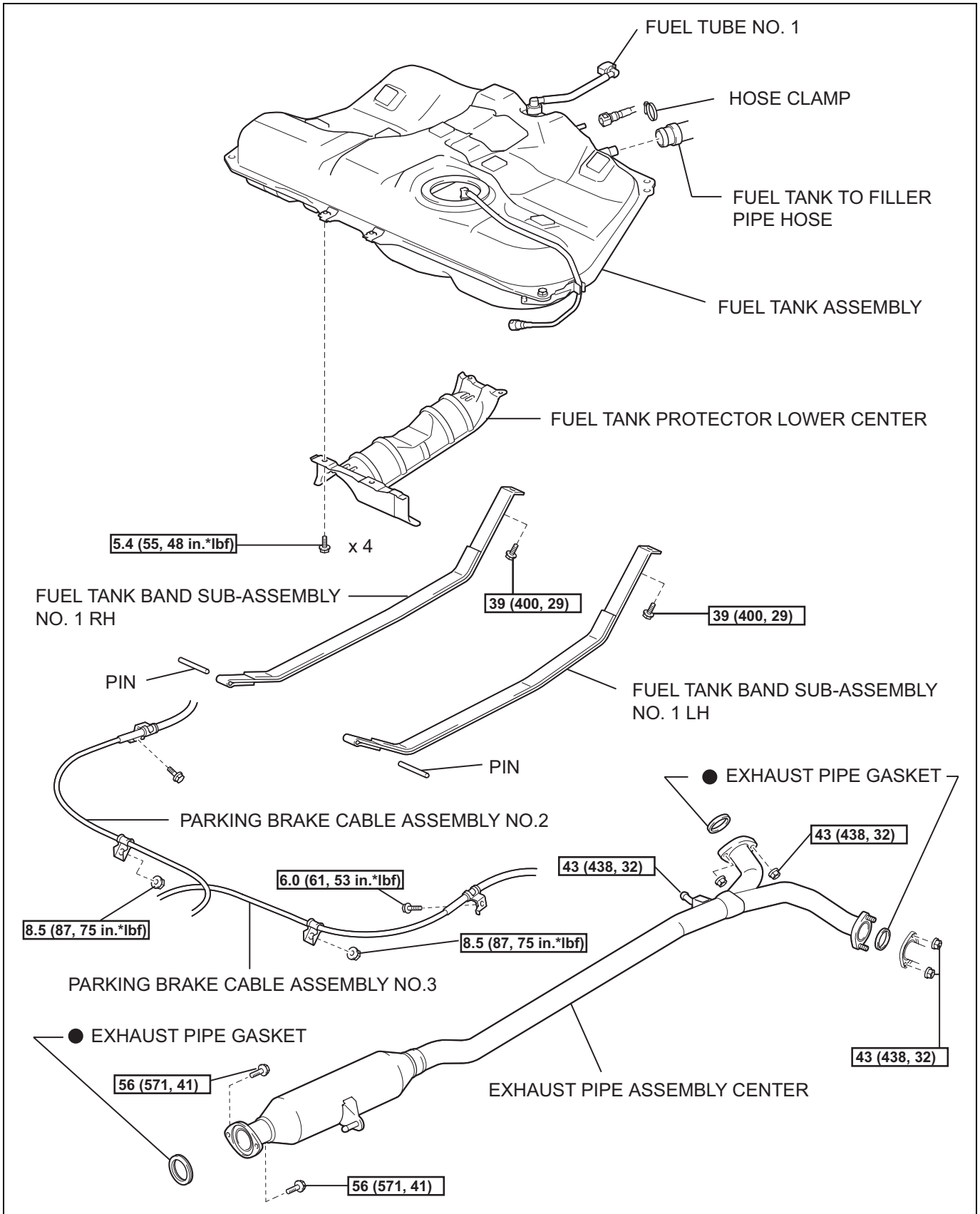

N*m (kgf*cm, ft.*lbf) : Specified torque

● Non-reusable part

P

A126277E01

FU

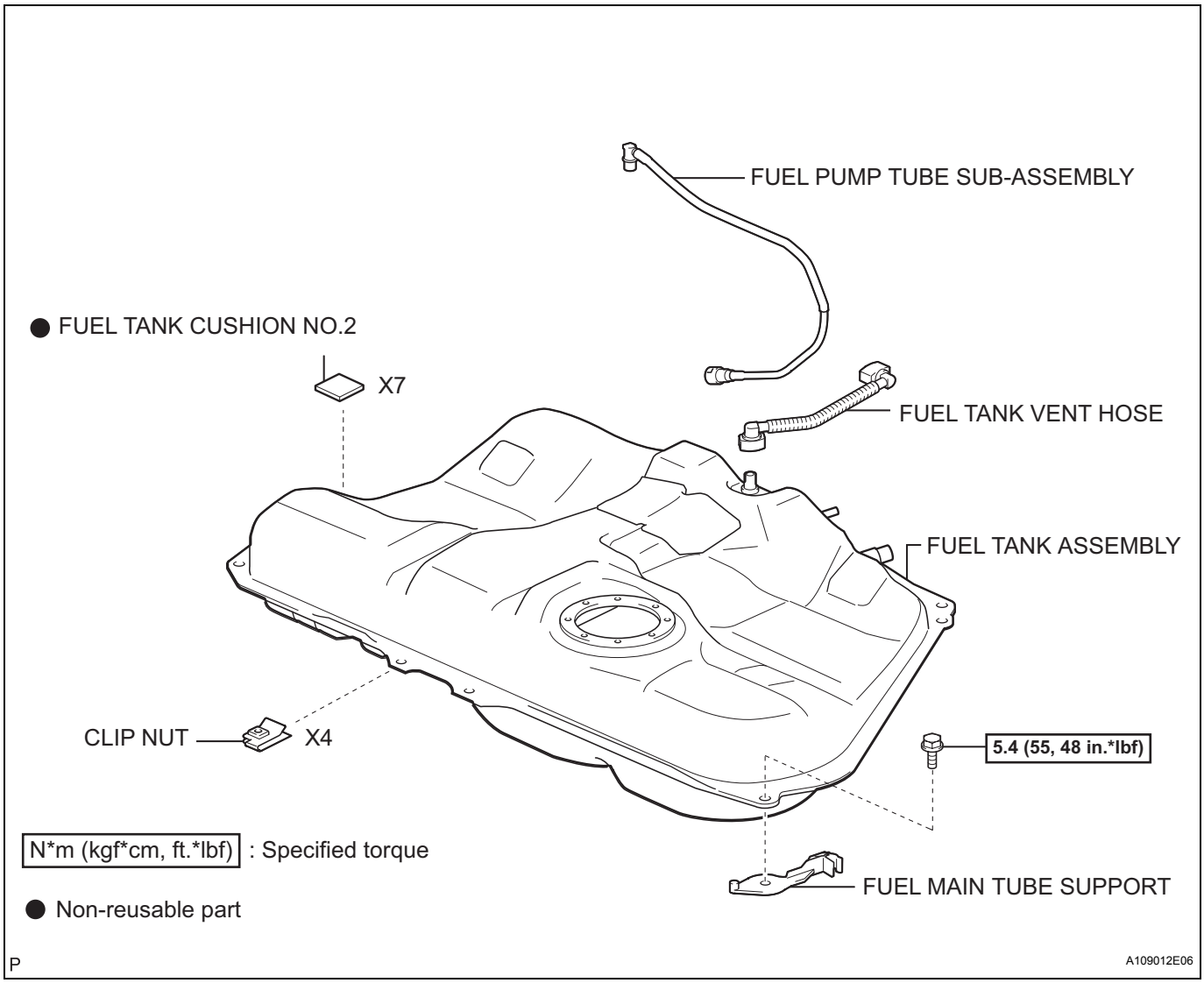
FUEL PUMP TUBE SUB-ASSEMBLY
● FUEL TANK CUSHION NO.2
X7
FUEL TANK VENT HOSE
FUEL TANK ASSEMBLY
CLIP NUT
X4
5.4 (55, 48 in.*lbf)
N*m (kgf*cm, ft.*lbf) : Specified torque
FUEL MAIN TUBE SUPPORT
● Non-reusable part
P
A109012E06

REMOVAL

1. **PREVENT GASOLINE FROM SPILLING OUT**
2. **DISCONNECT BATTERY NEGATIVE TERMINAL**
3. **REMOVE REAR SEAT CUSHION ASSEMBLY (See page SE-68)**
4. **REMOVE REAR FLOOR SERVICE HOLE COVER (See page FU-26)**
5. **SEPARATE FUEL PUMP TUBE SUB-ASSEMBLY (See page FU-26)**
6. **REMOVE FUEL TANK VENT TUBE SET PLATE (See page FU-26)**
7. **REMOVE FUEL SUCTION TUBE ASSEMBLY WITH PUMP AND GAUGE (See page FU-27)**
8. **DRAIN FUEL**
9. **REMOVE EXHAUST PIPE ASSEMBLY CENTER (See page EX-2)**
10. **DISCONNECT PARKING BRAKE CABLE ASSEMBLY NO.2**
    (a) Remove the set bolt and set nut of the parking brake cable assembly No.2.

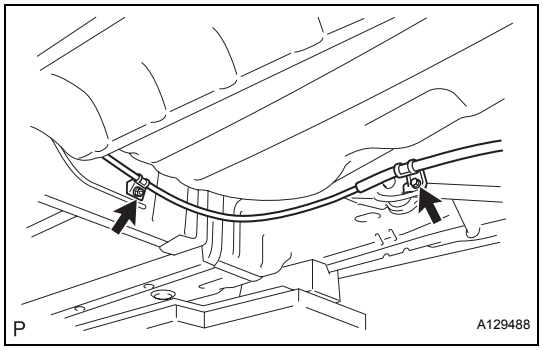

11. **DISCONNECT PARKING BRAKE CABLE ASSEMBLY NO.3**
    (a) Remove the set bolt and set nut of the parking brake cable assembly No.3.

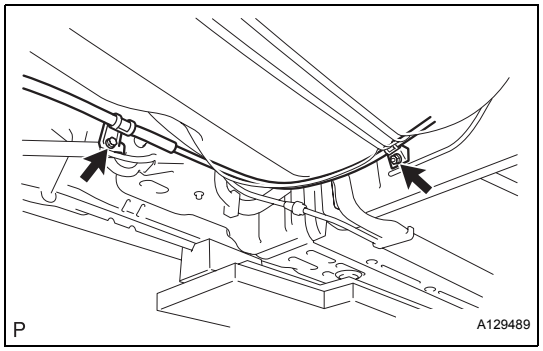

12. **REMOVE FUEL TANK PROTECTOR LOWER CENTER**
    (a) Remove the 4 bolts and fuel tank protector.

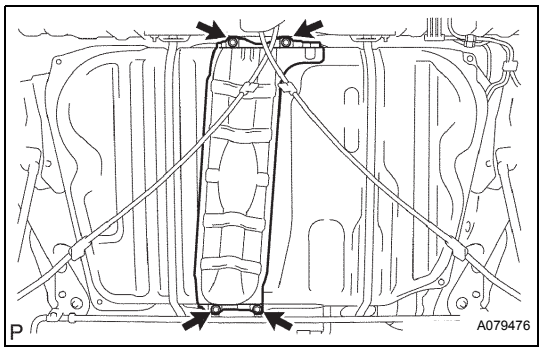

FU

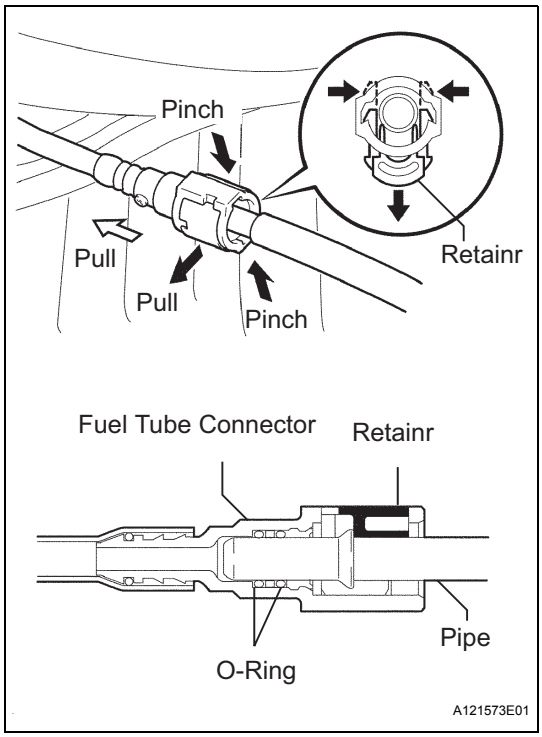

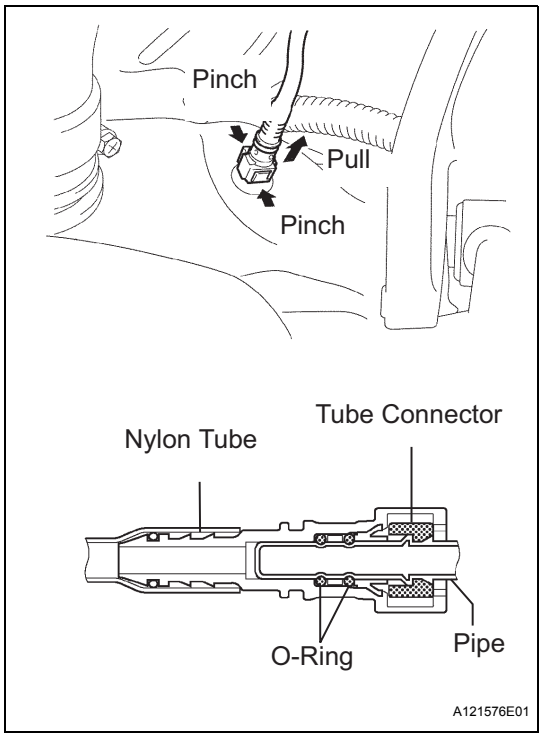

13. REMOVE FUEL TANK ASSEMBLY

(a) Disconnect the fuel pump tube.

(1) Pinch the tab of the retainer to remove the lock claws and pull it down as shown in the illustration.

(2) Pull out the fuel tank main tube.

NOTICE:

- **Check that there is no dirt or other foreign objects around the connector before this operation and clean the connector as necessary.**
- **Be careful of mud because the quick connector has O-rings which seal the pipe and connector that can be contaminated.**
- **Do not use any tools in this operation.**
- **Do not bend or twist the nylon tube. Protect the connector by covering it with a plastic bag.**
- **When the pipe and connector are stuck, push and pull the connector to release and pull the connector out carefully.**

(b) Disconnect the fuel tube No.1.

(1) Pinch the tube connector and then pull out the fuel tube No.1.

NOTICE:

- **Check that there is no dirt or other foreign objects around the connector before this operation and clean the connector as necessary.**
- **Be careful of mud because the quick connector has O-rings which seal the pipe and connector that can be contaminated.**
- **Do not use any tools in this operation.**
- **Do not bend or twist the nylon tube. Protect the connector by covering it with a plastic bag.**
- **When the pipe and connector are stuck, push and pull the connector to release and pull the connector out carefully.**

FU

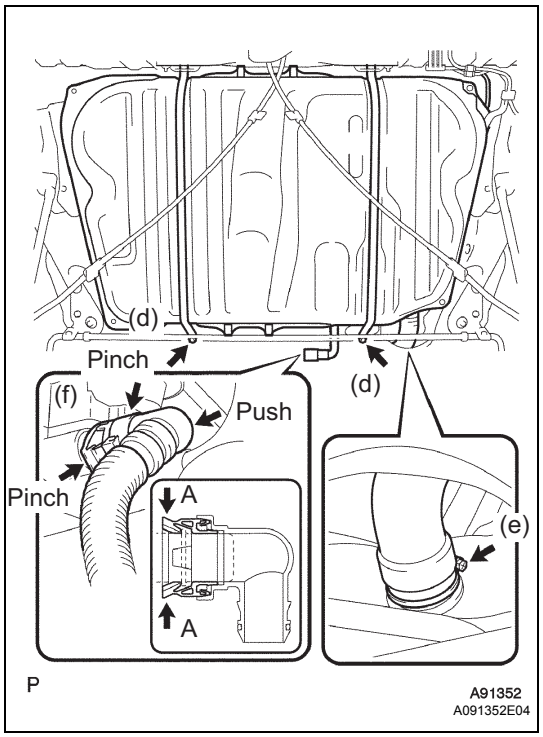

(c) Set up a transmission jack underneath the fuel tank.
(d) Remove the 2 set bolts of the fuel tank bands.
(e) Remove the hose clamp and disconnect the fuel tank to filter pipe hose.
(f) Disconnect the fuel tank vent hose from the charcoal canister.
  (1) Push the connector deep into the charcoal canister to release the locking pin.
  (2) Pinch portion A.
  (3) Pull out the connector.
(g) Remove the fuel tank.

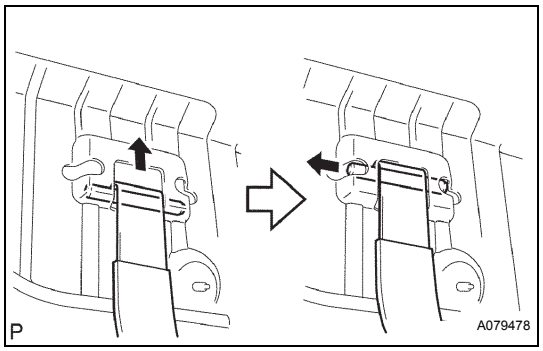

(h) Remove the 2 pins and 2 fuel tank bands as shown in the illustration.

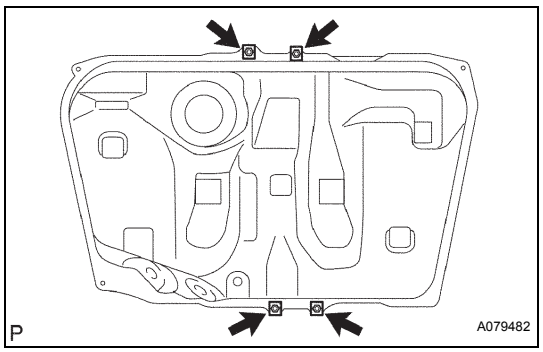

(i) Remove the 4 clip nuts.

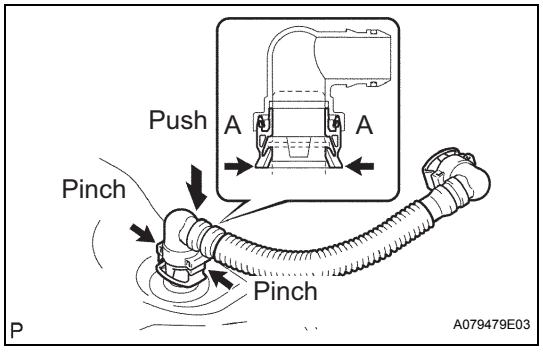

DISASSEMBLY

1. REMOVE FUEL TANK VENT HOSE

(a) Push the connector deep into the charcoal canister to release the locking pin.
(b) Pinch portion A.
(c) Pull out the connector.

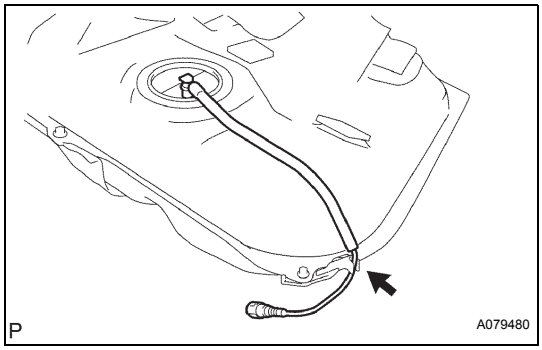

2. REMOVE FUEL PUMP TUBE SUB-ASSEMBLY

(a) Remove the fuel pump tube from the fuel main tube support.

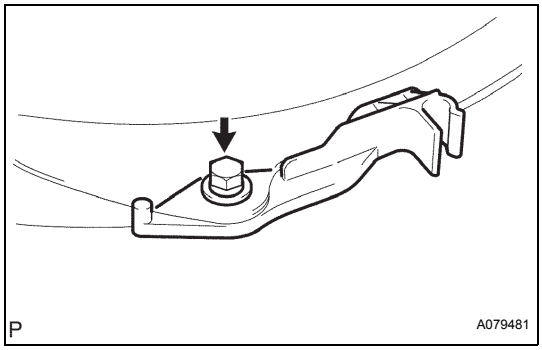

3. REMOVE FUEL MAIN TUBE SUPPORT

(a) Remove the bolt and tube support.

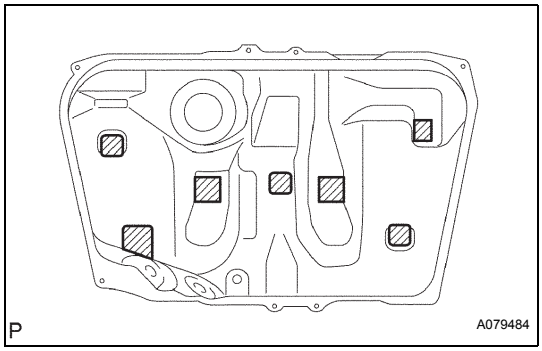

4. REMOVE FUEL TANK CUSHION NO.2

(a) Remove the 7 fuel tank cushion No.2.

REASSEMBLY

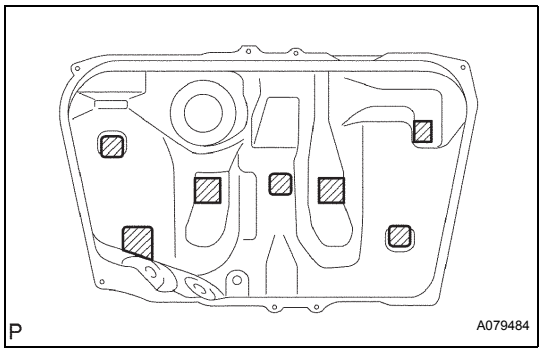

1. INSTALL FUEL TANK CUSHION NO.2

(a) Install the 7 new fuel tank cushions to the fuel tank.

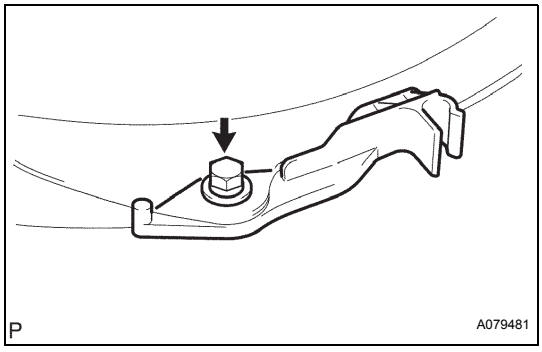

2. INSTALL FUEL MAIN TUBE SUPPORT

(a) Install the fuel main tube support with the bolt.
Torque: 5.4 N*m (55 kgf*cm, 48 in.*lbf)

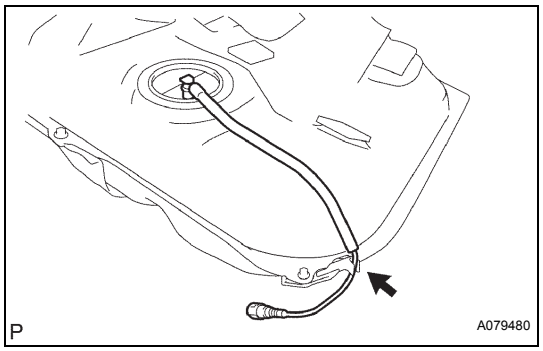

3. INSTALL FUEL PUMP TUBE SUB-ASSEMBLY

(a) Install the fuel pump tube to the fuel main tube support.

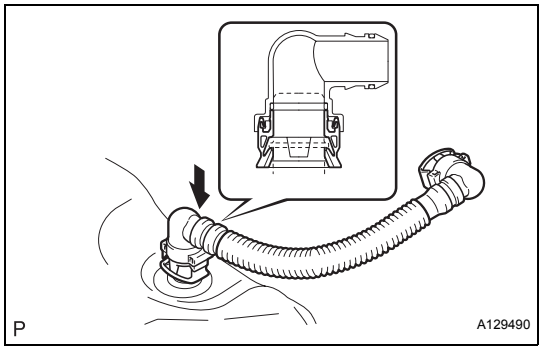

4. INSTALL FUEL TANK VENT HOSE

(a) Install the fuel tank vent hose.

INSTALLATION

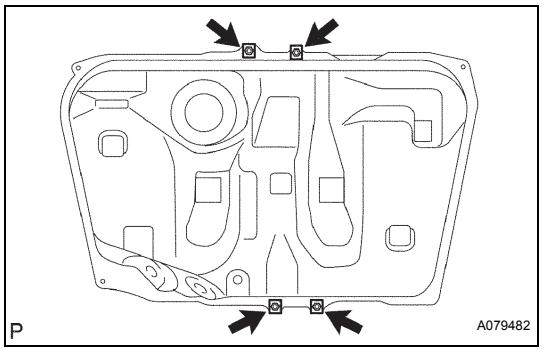

1. INSTALL FUEL TANK ASSEMBLY

(a) Install the 4 clip nuts.

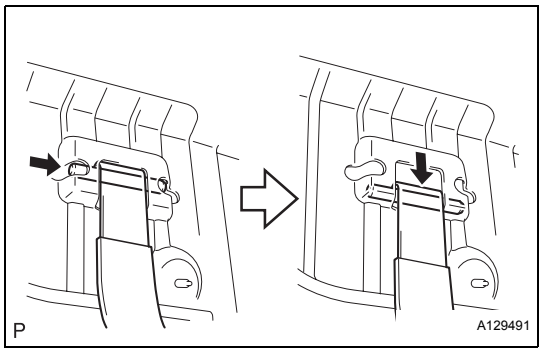

(b) Install the 2 fuel tank bands with the 2 pins.

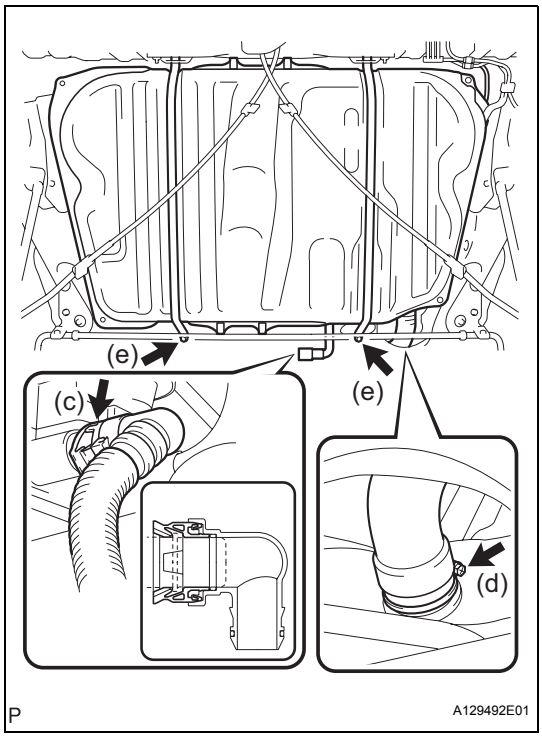

(c) Connect the fuel tank vent hose.
(d) Connect the fuel tank inlet pipe with the fuel filter pipe clamp.
(e) Tighten the 2 set bolts of the fuel tank bands.
Torque: 39 N*m (400 kgf*cm, 29 ft.*lbf)

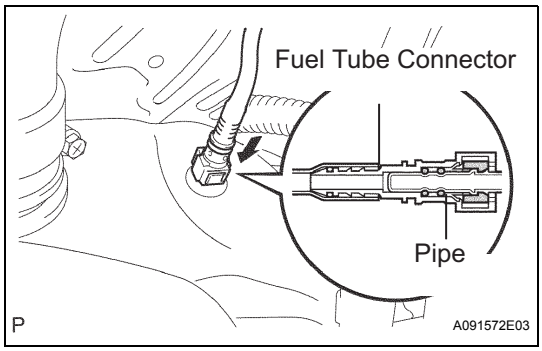

(f) Connect the fuel tube No.1.
(1) Push the fuel tube connector into the pipe until the fuel tube connector makes a "click" sound.
NOTICE:
- **Check that there is no damage or foreign objects on the connected part.**
- **After connecting, check if the fuel tube connector and the pipe are securely connected by trying to pull them apart.**

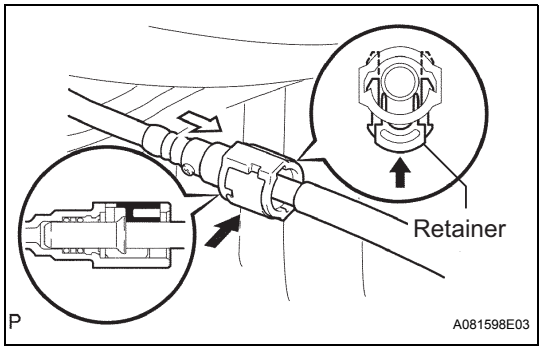

(g) Connect the fuel pump tube.
(1) Push in the fuel the connector to the pipe and push up the retainer so that the claws engage.
NOTICE:
- **Check that there is no damage or foreign objects on the connected part.**
- **After connecting, check if the fuel tube connector and the pipe are securely connected by trying to pull them apart.**

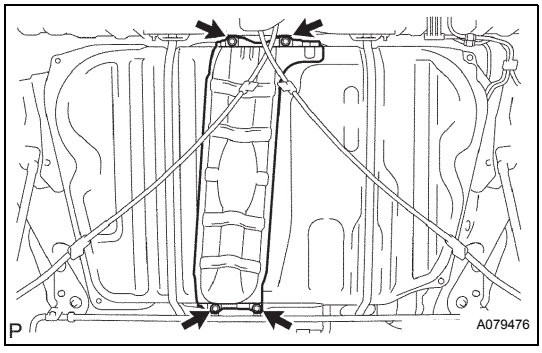

2. INSTALL FUEL TANK PROTECTOR LOWER CENTER
(a) Install all fuel tank protector lower center.
Torque: 5.4 N*m (55 kgf*cm, 48 in.*lbf)

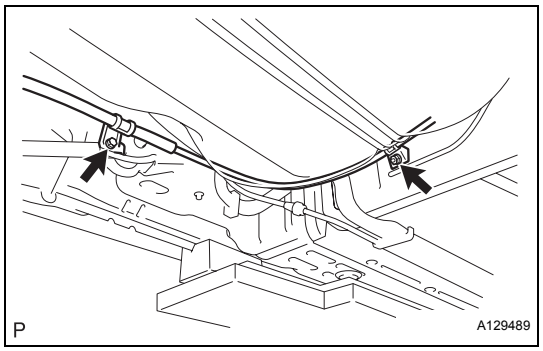

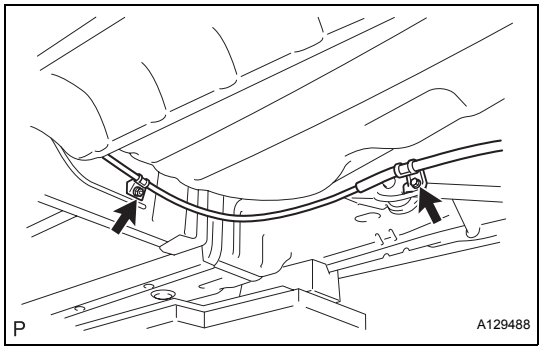

3. **INSTALL PARKING BRAKE CABLE ASSEMBLY NO.3**
   (a) Install the parking brake cable assembly No.3 with the bolt and nut.
   Torque: Bolt
   6.0 N*m (61 kgf*cm, 53 in.*lbf)
   Nut
   8.5 N*m (87 kgf*cm, 75 in.*lbf)

4. **INSTALL PARKING BRAKE CABLE ASSEMBLY NO.2**
   (a) Install the parking brake cable assembly No.2 with the bolt and nut.
   Torque: Bolt
   6.0 N*m (61 kgf*cm, 53 in.*lbf)
   Nut
   8.5 N*m (87 kgf*cm, 75 in.*lbf)

5. **INSTALL EXHAUST PIPE ASSEMBLY CENTER (See page EX-3)**

6. **INSTALL FUEL SUCTION TUBE ASSEMBLY WITH PUMP AND GAUGE (See page FU-31)**

7. **INSTALL FUEL TANK VENT TUBE SET PLATE (See page FU-31)**

8. **CONNECT FUEL PUMP TUBE SUB-ASSEMBLY (See page FU-31)**

9. **ADD FUEL**

10. **CONNECT BATTERY NEGATIVE TERMINAL**

11. **CHECK FOR FUEL LEAKS (See page FU-7)**

12. **CHECK FOR EXHAUST GAS LEAKS**

13. **INSTALL REAR FLOOR SERVICE HOLE COVER**

14. **INSTALL REAR SEAT CUSHION ASSEMBLY**

15. **PERFORM SYSTEM INITIALIZE**
   (a) Some systems need initialization when disconnecting the battery terminal.

GARAGE DOOR OPENER SYSTEM

PARTS LOCATION

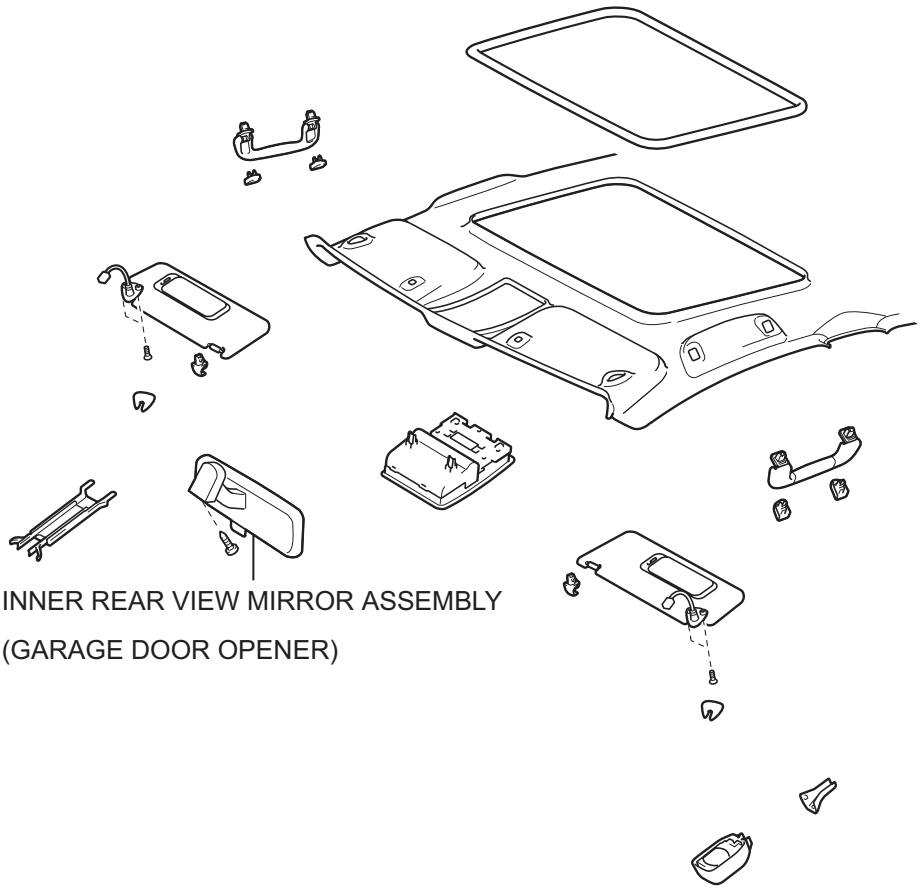

P

B115053E02

SYSTEM DIAGRAM

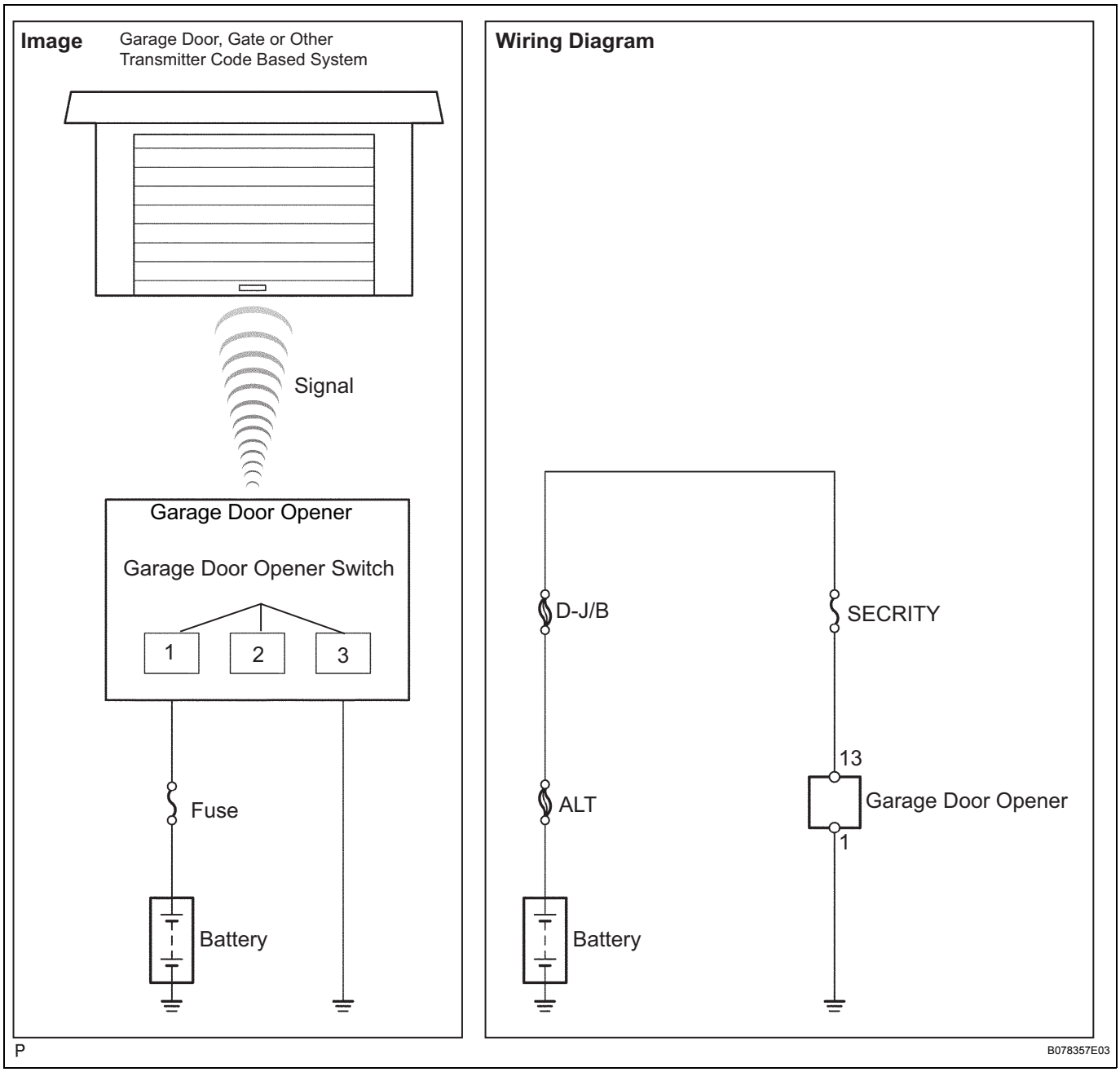

GD

REGISTRATION

1. RESISTER TRANSMITTER CODE

HINT:

- The vehicle's garage door opener records transmitter codes for systems such as garage doors, gates, entry gates, door locks, home lighting systems, security systems or other transmitter code based systems.
- The garage door opener is built into the dome lamp No.1. If replacing the dome lamp No.1 transmitter codes for any systems previously registered in the garage door opener must be re-registered.

(a) Re-register systems in the garage door opener registration mode.

NOTICE:

- **Do not perform transmitter code registration for a system if people or objects are near the system. When registering transmitter codes for a system, injury or damage can occur because the system may open, close, unlock or otherwise operate.**
- **Before transmitter code registration, stop the engine and remove the key from the ignition switch.**
- **The garage door opener cannot be used with systems that: 1) were manufactured before April 1, 1982; or 2) do not meet Federal Safety Standards (for example, garage doors without a jam protection function).**

HINT:

- 3 transmitter codes can be registered with the garage door opener, one transmitter code for each of the 3 garage door opener switches.
- Disconnecting the battery will not erase the transmitter codes registered with the garage door opener.
- An attempt to overwrite a previously registered transmitter code with a new system's transmitter code may fail. In these situations, the previously registered transmitter code will not be erased.

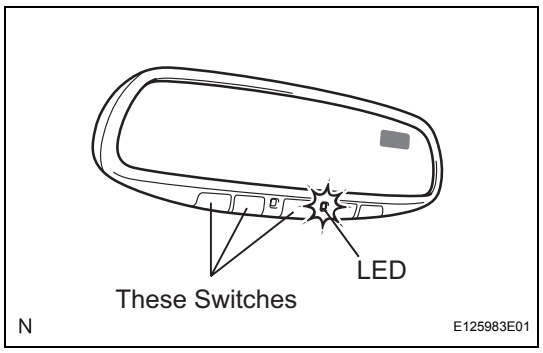

(1) Select a garage door opener switch for transmitter code registration.

(2) Press and hold the selected switch for 20 seconds. The garage door opener will enter registration mode.

HINT:

Before entering registration mode, the LED is ON. After entering registration mode, the LED flashes at a cycle of 1 Hz. For a "rolling code" type system, after entering registration mode, the LED flashes at a cycle of 8.8 Hz for 1.6 seconds, and then the LED flashes at a cycle of 1 Hz.

GD

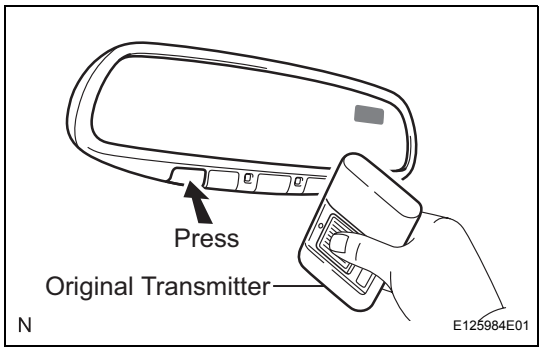

(3) After the garage door opener has entered registration mode, bring the original transmitter of the system to be registered within 1 to 3 inches of the garage door opener and press and hold one of the garage door opener switches. Then press the original transmitter switch.

(4) If the transmitter code registration was successful, the LED of the garage door opener flashes at a cycle of 5.6 Hz. If no malfunction occurs, release both the garage door opener switch and the original transmitter switch.

Timing chart of registration mode:

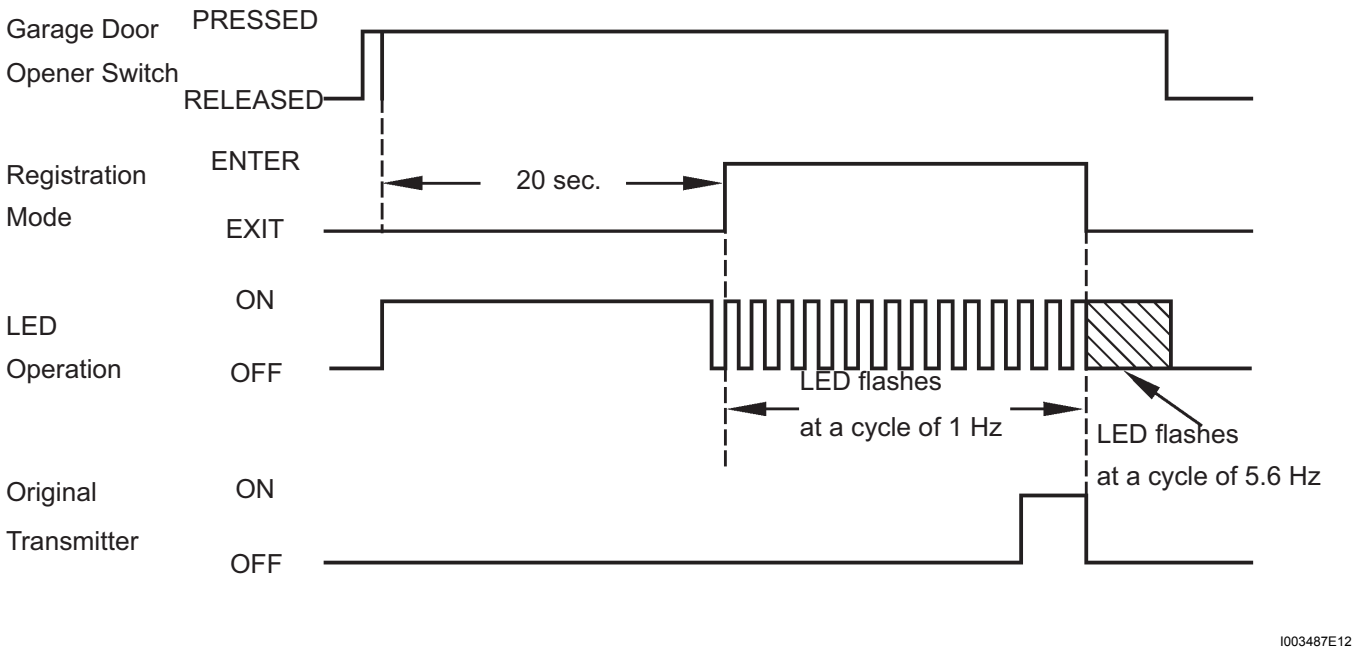

HINT:

- If transmitter code registration fails: 1) the original transmitter's battery may be low or need to be replaced, or 2) the system you are trying to register may not be compatible with the garage door opener.
- Some transmitter's signals stop after 1 to 2 seconds. For these types of transmitters: 1) press and hold one of the garage door opener switches, and 2) press and release (cycle) the transmitter switch every 2 seconds. Check if the transmitter code was successfully registered.
- After entering the garage door opener registration mode, transmitter code registration must be completed within 90 seconds. If 90 seconds elapses, the garage door opener will enter low power mode (see step (c))).

GD

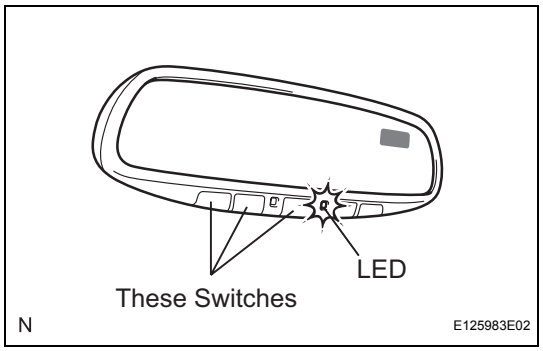

(b) Erase transmitter codes in the garage door opener clear mode.
HINT:
All 3 registered transmitter codes will be erased. No option exists for only erasing one transmitter code.
(1) Press and hold the left and right switches of the garage door opener for 20 seconds. The LED will begin to flash at a cycle of 5.6 Hz.
Releasing the switches will end clear mode.

Timing chart of clear mode:

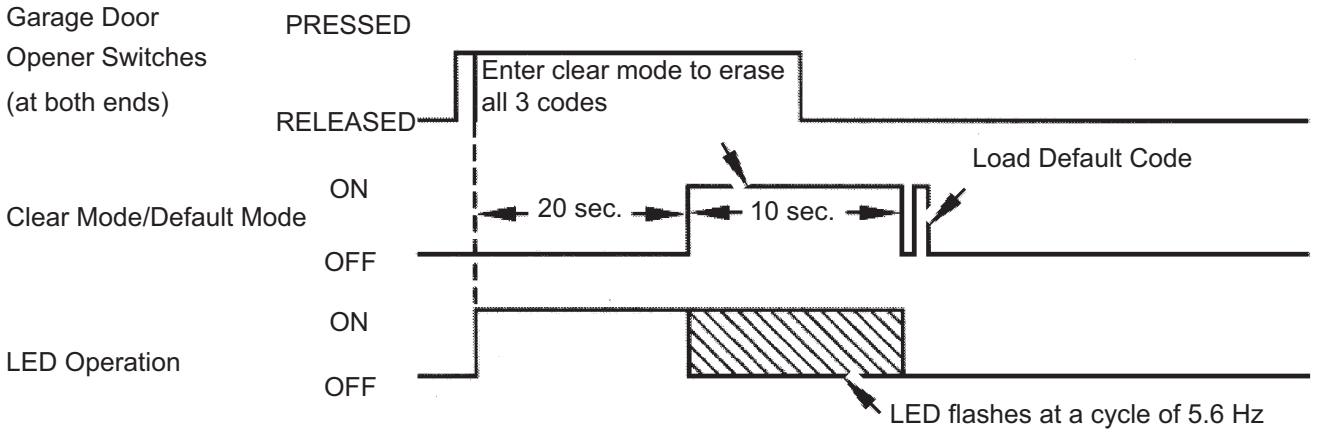

HINT:
- If the switches are released within 10 seconds after the transmitter codes have been erased, the garage door opener will enter registration mode.
- If the switches are held for 10 seconds or more after the transmitter codes have been erased, default codes will be set to the 3 switches of the garage door opener. Using these default codes, operation of the garage door opener can be checked using a tester.

(c) Low power mode:
(1) If a garage door opener switch is held for 75 seconds or more, the garage door opener will enter low power mode to economize on power consumption. When the garage door opener has entered low power mode, the LED turns off.

GD

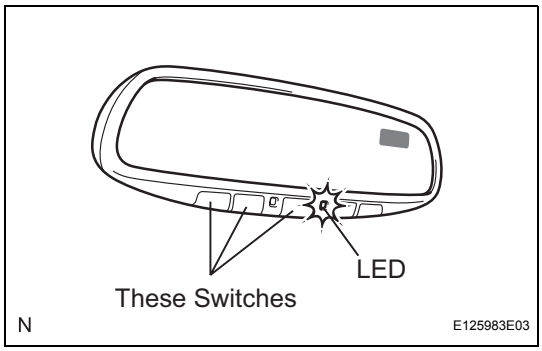

INSPECTION

1. INSPECT GARAGE DOOR OPENER

(a) Press the switch and check that each red LED turns on. If one or more of the switches does not turn on the LED, confirm normal operation of the fuse and wire harness, then replace the garage door opener.

2. INSPECT GARAGE DOOR OPENER REGISTRATION AND TRANSMITTING

HINT:
Use the KENTMORE home link tester and a tester transmitter for this test. First erase the customer's transmitter code, and then register the tester transmitter code.

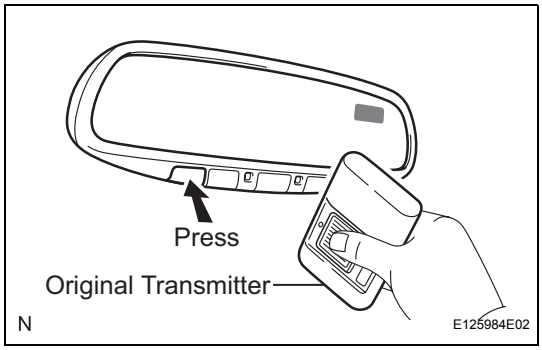

(a) Check if the tester transmitter code was successfully registered.
HINT:
If the code cannot be registered, replace the garage door opener.

GD

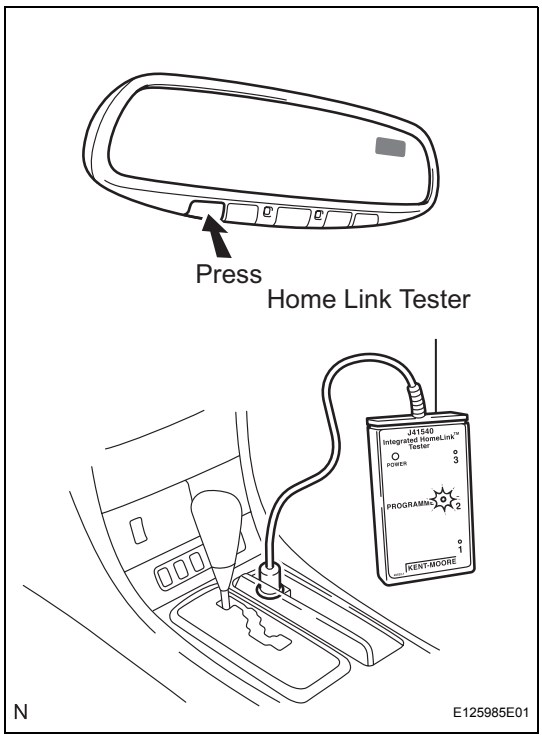

(b) Press the garage door opener switch that was registered to the tester transmitter. Check if the home link tester's green LED illuminates.
HINT:
If the green LED does not illuminate, replace the garage door opener.

(c) When the inspection is complete, re-register the customer's transmitter code(s) again.

HORN SYSTEM

PARTS LOCATION

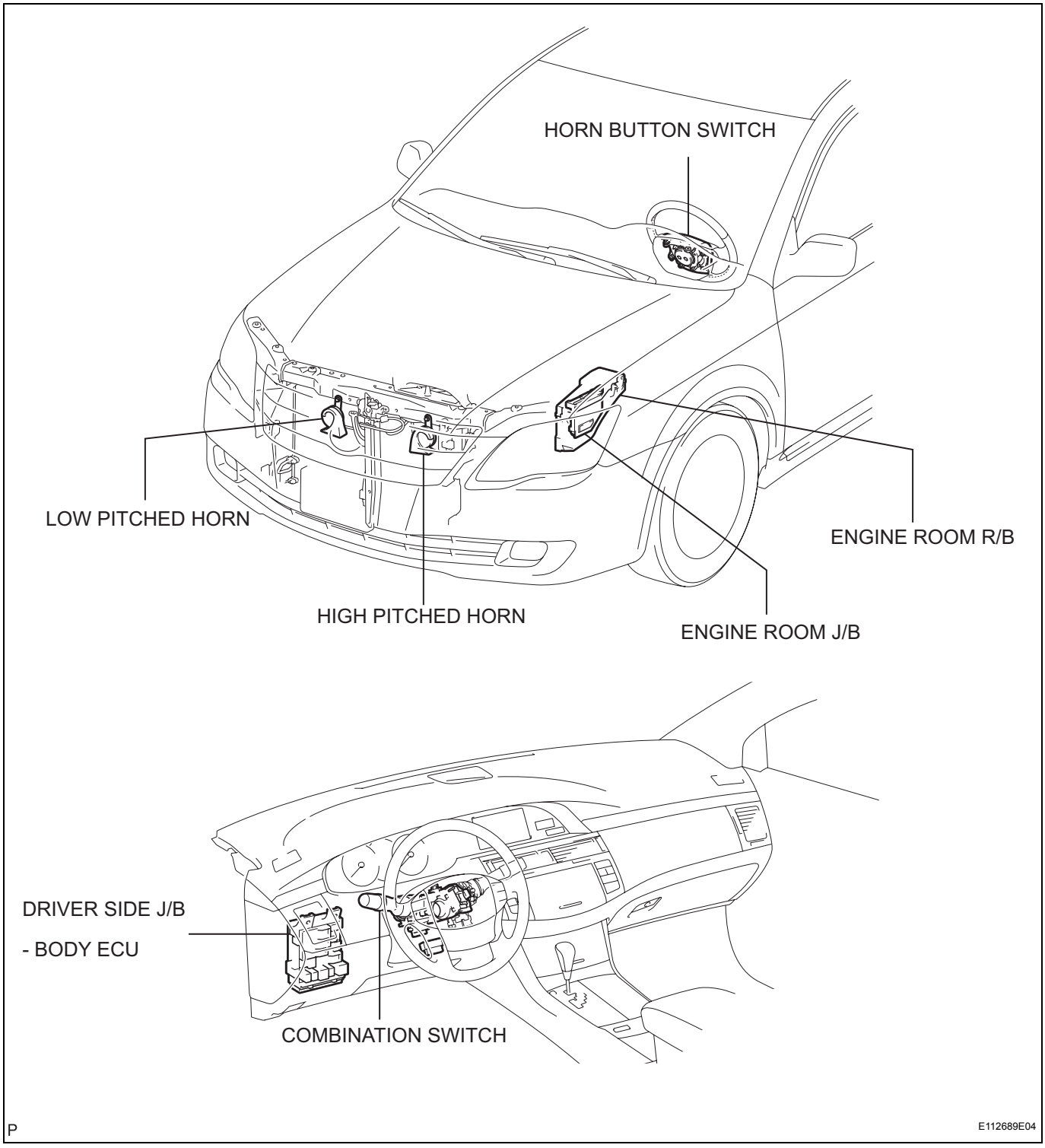

SYSTEM DIAGRAM

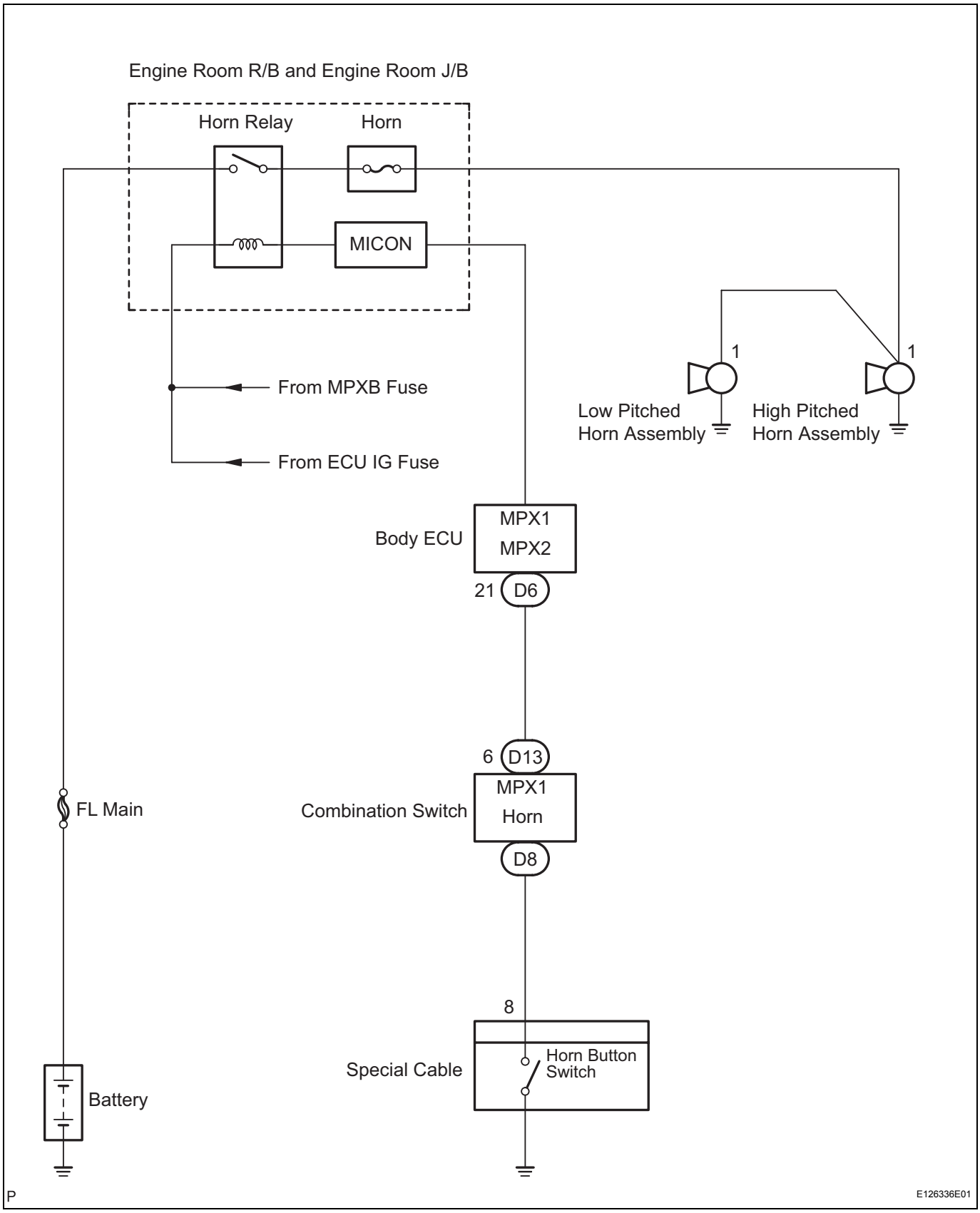

HO

PROBLEM SYMPTOMS TABLE

Symptom	Suspected area	See page
Horn does not sound	1. Horn fuse	-
	2. High pitched horn assembly	HO-7
	3. Low pitched horn assembly	HO-5
	4. Horn button switch	-
	5. Wire harness	-

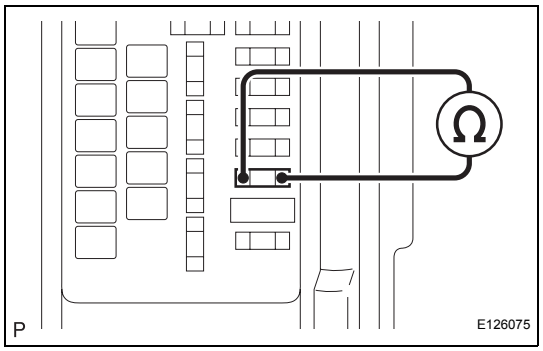

INSPECTION

1. INSPECT FUSE

(a) Check the resistance of the HORN fuse.

Resistance:

Below 1 Ω

If the result is not as specified, replace the fuse.

LOW PITCHED HORN

COMPONENTS

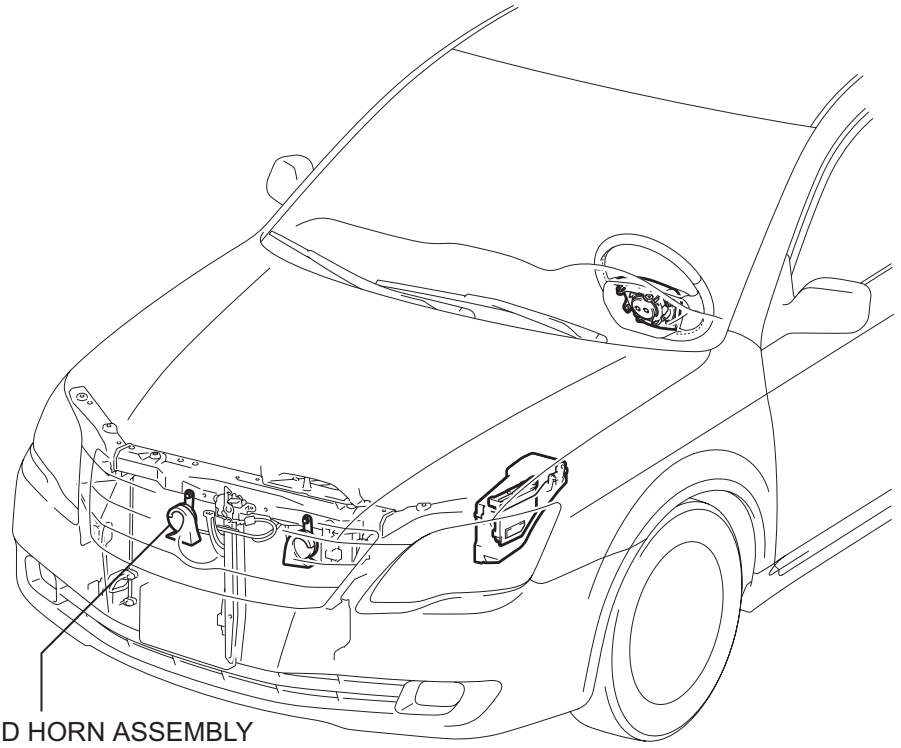

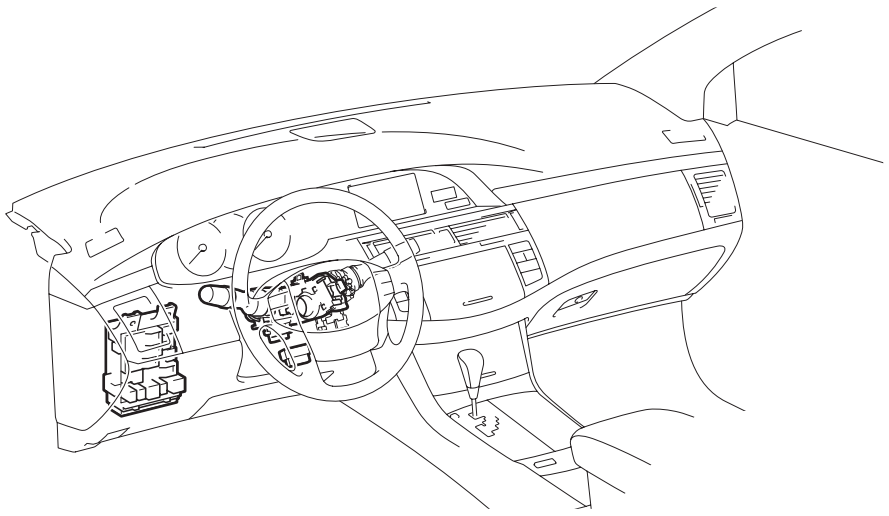

P

E112689E02

REMOVAL

1. **REMOVE RADIATOR GRILLE SUB-ASSEMBLY (See page ET-2)**

2. **REMOVE LOW PITCHED HORN ASSEMBLY**
   (a) Disconnect the connector.
   (b) Remove the bolt and remove the low pitched horn assembly.

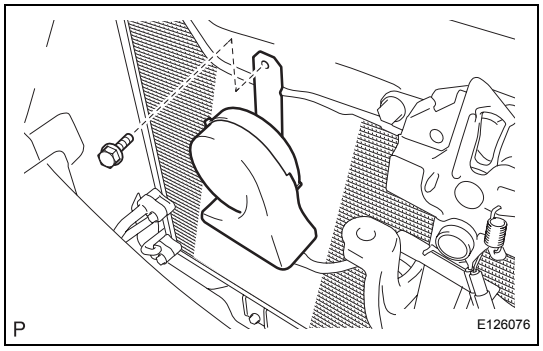

INSPECTION

1. **INSPECT LOW PITCHED HORN ASSEMBLY**
   (a) Check operation of the horn.

Measurement Condition	Specified Condition
Battery positive (+) → Terminal 1 Battery negative (-) → Horn body	Horn sounds

If the result is not as specified, replace the horn assembly.

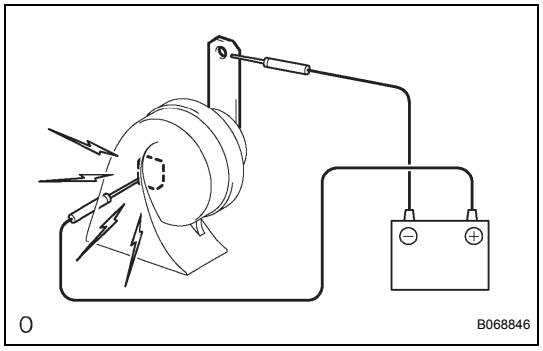

INSTALLATION

1. **INSTALL LOW PITCHED HORN ASSEMBLY**
   (a) Install the low pitched horn assembly with the bolt.
   Torque: 20 N*m (204 kgf*cm, 15 ft.*lbf)
   (b) Connect the connector.
2. **INSTALL RADIATOR GRILLE SUB-ASSEMBLY (See page ET-4)**

HIGH PITCHED HORN

COMPONENTS

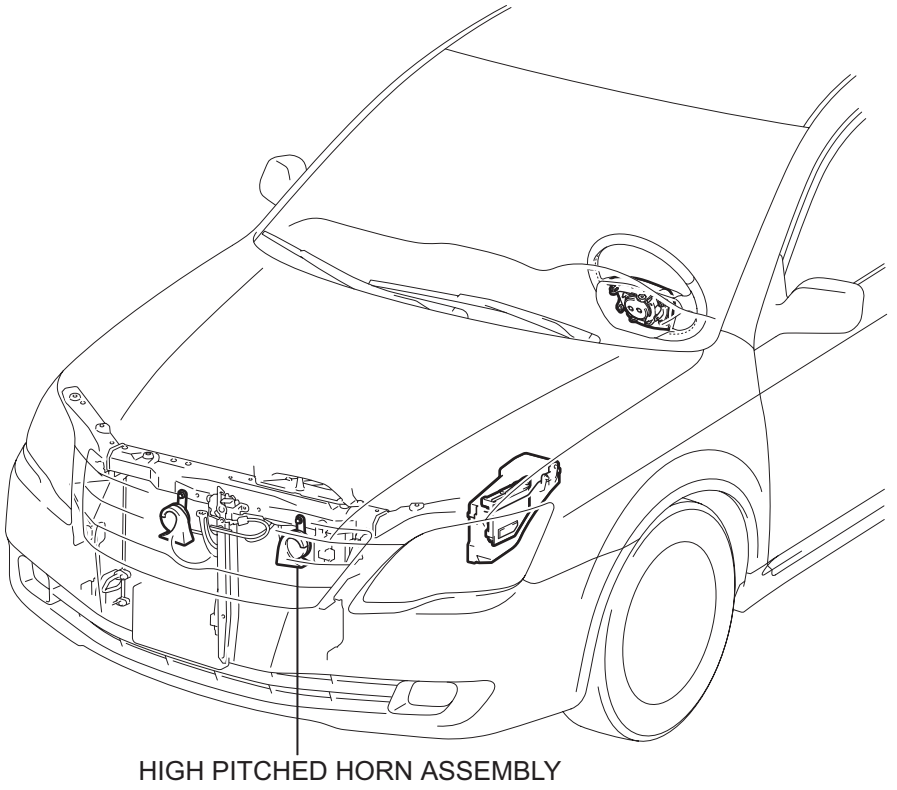

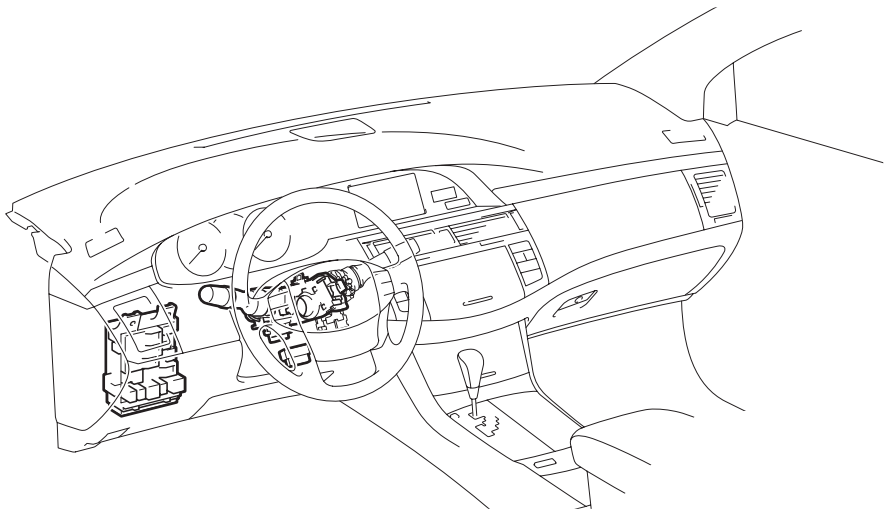

P

E112689E03

REMOVAL

1. **REMOVE RADIATOR GRILLE SUB-ASSEMBLY (See page ET-2)**

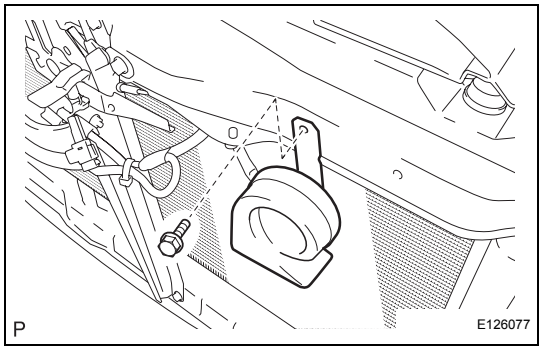

2. **REMOVE HIGH PITCHED HORN ASSEMBLY**
   (a) Disconnect the connector.
   (b) Remove the bolt and remove the high pitched horn assembly.

INSPECTION

1. **INSPECT HIGH PITCHED HORN ASSEMBLY**
   (a) Check operation of the horn.

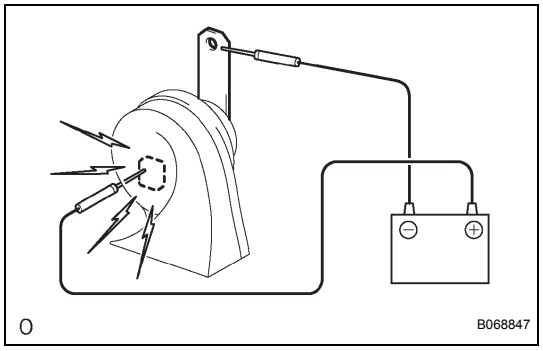

Measurement Condition	Specified Condition
Battery positive (+) → Terminal 1 Battery negative (-) → Horn body	Horn sounds

If the result is not as specified, replace the horn assembly.

INSTALLATION

1. **INSTALL HIGH PITCHED HORN ASSEMBLY**
   (a) Install the high pitched horn assembly with the bolt.
   Torque: 20 N*m (204 kgf*cm, 15 ft.*lbf)
   (b) Connect the connector.
2. **INSTALL RADIATOR GRILLE SUB-ASSEMBLY (See page ET-4)**

IGNITION SYSTEM

PARTS LOCATION

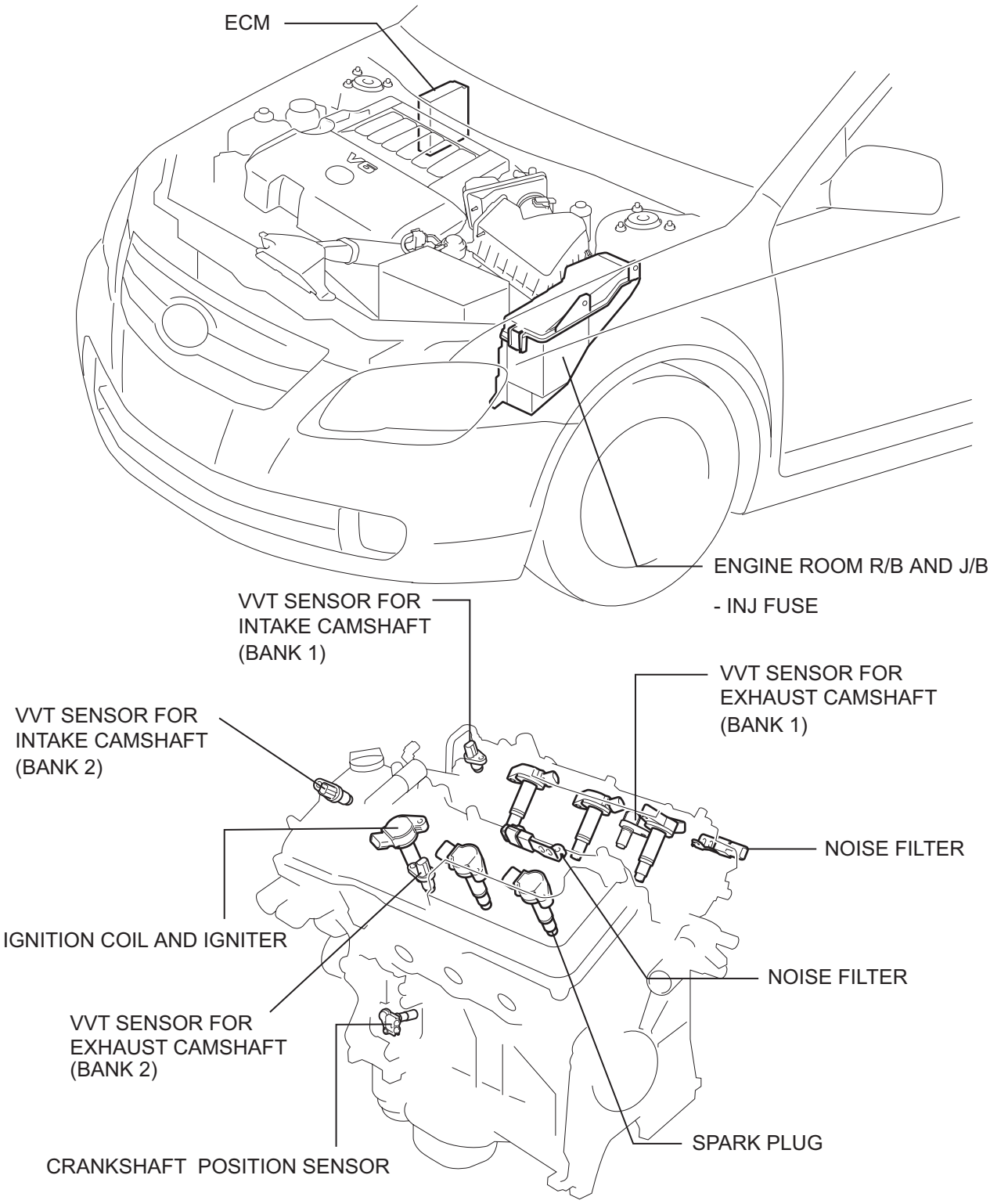

IG

SYSTEM DIAGRAM

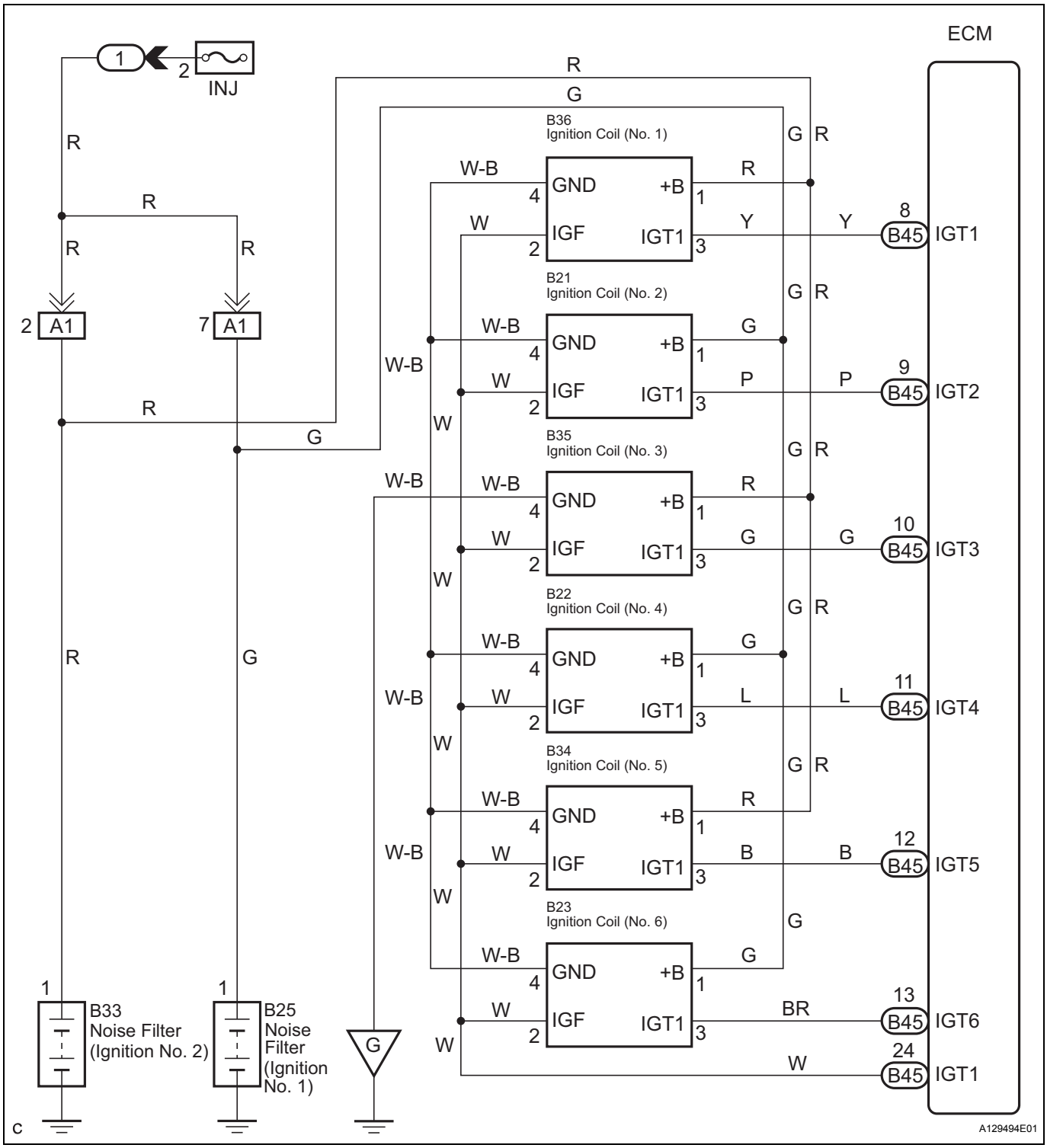

IG

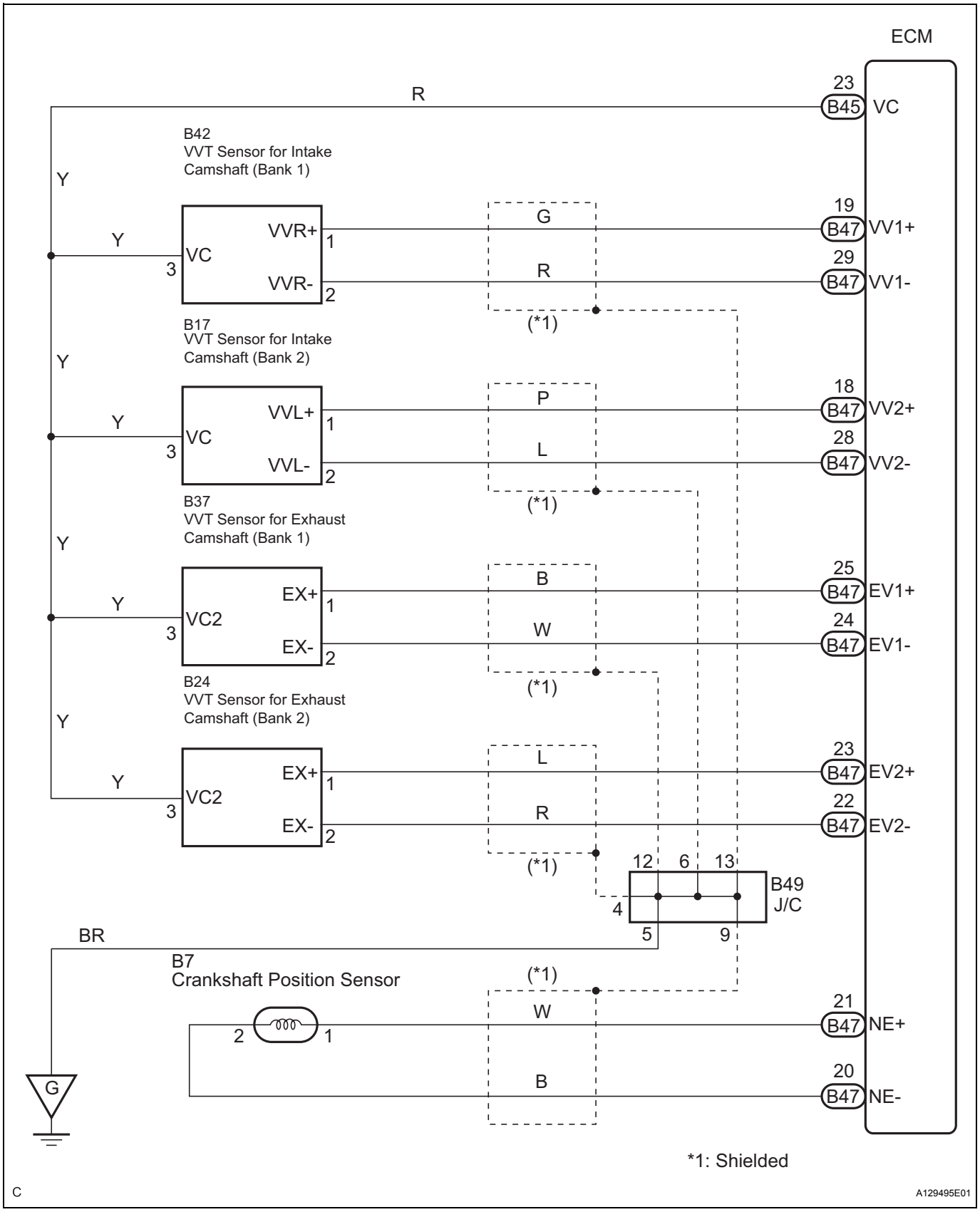
ECM
R
23
B45
VC
B42
VVT Sensor for Intake
Camshaft (Bank 1)
Y
Y
VVR+
1
VC
3
VVR-
2
G
R
19
B47
VV1+
29
B47
VV1-
(*1)
B17
VVT Sensor for Intake
Camshaft (Bank 2)
Y
Y
VVL+
1
VC
3
VVL-
2
P
L
18
B47
VV2+
28
B47
VV2-
(*1)
B37
VVT Sensor for Exhaust
Camshaft (Bank 1)
Y
Y
EX+
1
VC2
3
EX-
2
B
W
25
B47
EV1+
24
B47
EV1-
(*1)
B24
VVT Sensor for Exhaust
Camshaft (Bank 2)
Y
Y
EX+
1
VC2
3
EX-
2
L
R
23
B47
EV2+
22
B47
EV2-
(*1)
12
6
13
B49
J/C
4
5
9
BR
B7
Crankshaft Position Sensor
(*1)
2
1
W
B
21
B47
NE+
20
B47
NE-
G
*1: Shielded
C
A129495E01

IG

ON-VEHICLE INSPECTION

NOTICE:
In this section, the terms "cold" and "hot" refer to the temperature of the coils. "Cold" means approximately -10°C (14°F) to 50°C (122°F). "HOT" means approximately 50°C (122°F) to 100°C (212°F).

1. INSPECT IGNITION COIL ASSEMBLY

(a) Check for DTCs.
NOTICE:
If any DTC is present, perform troubleshooting in accordance with the procedures for that DTC.

(b) Check that spark occurs.
(1) Remove the V-bank cover (See page EM-28).
(2) Remove the intake air surge tank (See page FU-12).
(3) Remove the ignition coils.
(4) Using a 16 mm (0.63 in.) plug wrench, remove the spark plugs.
(5) Install the spark plugs to each ignition coil, and connect the ignition coil connectors.
(6) Disconnect the 6 injector connectors.
(7) Ground the spark plugs.
(8) Check if a spark occurs at each spark plug while engine is being cranked.
NOTICE:
- **Be sure to ground the spark plugs when checking.**
- **Replace the ignition coil if it receives an impact.**
- **Do not crank the engine for more than 2 seconds.**

(c) Perform the spark test according to the flowchart below.
(1) Check that the wire harness side connector of the ignition coil with igniter is securely connected.
Result

Result	Proceed to
NG	Connect securely
OK	Go to next step

(2) Perform a speak test on each ignition coil with igniter.
1. Replace the ignition coil with igniter with a normal one.
2. Perform the spark test again.
Result

Result	Proceed to
OK	Replace ignition coil with igniter
NG	Go to next step

(3) Check the power supply to the ignition coil with igniter.
1. Turn the engine switch on (IG).
2. Check that there is battery voltage at the ignition coil positive (+) terminal.

Result

Result	Proceed to
NG	Check wiring between engine switch and ignition coil with igniter
OK	Go to next step

(4) Check the VVT sensor output voltage.

Result

Result	Proceed to
NG	Check that there is resistance between ECM and VVT sensor. If there is no resistance, replace VVT sensor. If there is resistance, repair wiring between VVT sensor and ECM
OK	Go to next step

(5) Check the resistance of the crankshaft position sensor.

Standard resistance

Temperature	Specified Condition
Cold	1,630 to 2,740 Ω
Hot	2,065 to 3,225 Ω

Result

Result	Proceed to
NG	Replace crankshaft position sensor
OK	Go to next step

(6) Check the IGT signal from the ECM.

Result

Result	Proceed to
NG	Check ECM
OK	Repair wiring between ignition coil and ECM

(d) Using a 16 mm (0.63 in.) plug wrench, install the spark plugs.
Torque: 18 N*m (184 kgf*cm, 13 ft.*lbf)

(e) Install the ignition coils.
Torque: 7.5 N*m (76 kgf*cm, 66 in.*lbf)

(f) Install the intake air surge tank (See page FU-17).

(g) Install the V-bank cover (See page EM-47).

2. CHECK VVT SENSOR OUTPUT VOLTAGE

(a) Turn the ignition switch on (IG).

(b) Check that the voltage between terminal VC1 and ground is 5 V.
HINT:
For the terminal arrangement of the engine ECU (See page ES-33).

IG

(c) While turning the crankshaft pulley by hand, measure the voltage between each terminal. Check that the voltage changes between the Hi range and Lo range as shown in the table below.
HINT:
For the terminal arrangement of the engine ECU (See page ES-33).

Sensor position	Terminal No.	Voltage (Hi)	Voltage (Lo)
Intake camshaft (Bank 1)	VV1+ - VV1-	3.375 to 4.950	0.450 to 1.375
Intake camshaft (Bank 2)	VV2+ -VV2-	3.375 to 4.950	0.450 to 1.375
Exhaust camshaft (Bank 1)	EV1 + - EV1-	3.375 to 4.950	0.450 to 1.375
Exhaust camshaft (Bank 2)	EV2+ - EV2-	3.375 to 4.950	0.450 to 1.375

INSPECTION

NOTICE:
In this section, the terms "cold" and "hot" refer to the temperature of the coils. "Cold" means approximately -10°C(14°F) to 50°C(122°F). "Hot" means approximately 50°C(122°F) to 100°C(212°F).

1. INSPECT SPARK PLUG

NOTICE:
- **Do not use a wire brush for cleaning.**
- **Do not attempt to adjust the electrode gap of a used spark plug.**

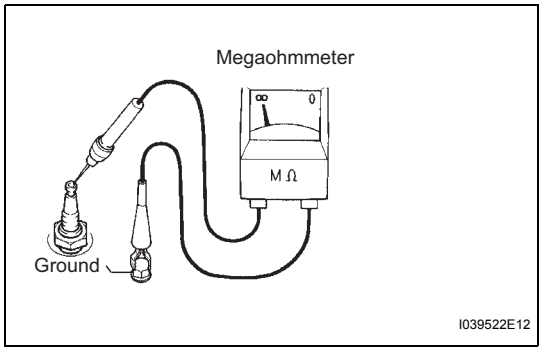

(a) Check the electrode.
(1) Using a megaohmmeter, measure the insulation resistance.
Correct insulation resistance:
10 MΩ or higher
If the resistance is less than the specified value, proceed to procedure "C".
HINT:
If a megaohmmeter is not available, perform the following simple inspection instead.

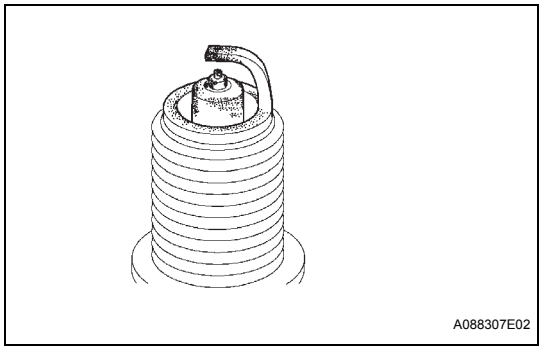

(b) Alternative inspection method:
(1) Quickly accelerate the engine to 4,000 rpm 5 times.
(2) Remove the spark plugs.
(3) Visually check the spark plugs.
- If the electrode is dry, the spark plug is functioning. Reinstall the spark plug.
- If the electrode is damp, proceed to procedure "A", "B" and "C".

(c) Check the spark plug for any damage to its thread and insulator (Procedure "A").
If there is damage, replace the spark plug. If not, reinstall the spark plug.
Require spark plug:

DENSO made	FK20HR11

CAUTION:
Please use long-reach plug.

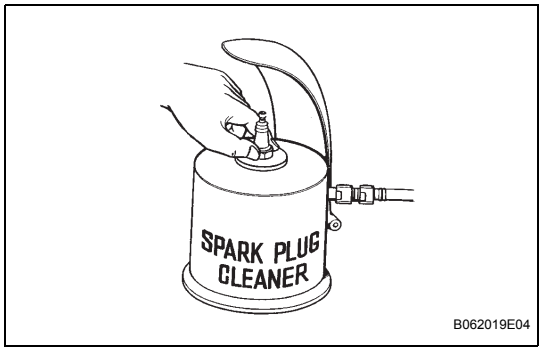

(d) Clean the spark plugs (Procedure "B").
If the electrode has traces of wet carbon, clean the electrode with a spark plug cleaner and then dry it.
Air pressure:
588 kPa (6 kgf*cm^2, 85 psi)
Duration:
20 seconds or less
HINT:
Only use the spark plug cleaner when the electrode is free of oil. If the electrode has traces of oil, use gasoline to clean off the oil before using the spark plug cleaner.

IG

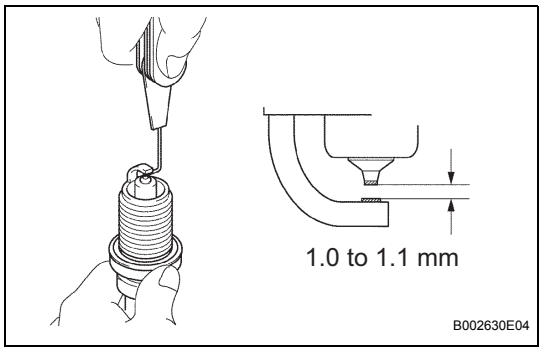

(e) Check the spark plug electrode gap (Procedure "C").

Electrode gap:

1.0 to 1.1 mm (0.039 to 0.043 in.)

Maximum electrode gap:

1.4 mm (0.055 in.)

If the gap is greater than the maximum, replace the spark plug.

VVT SENSOR

COMPONENTS

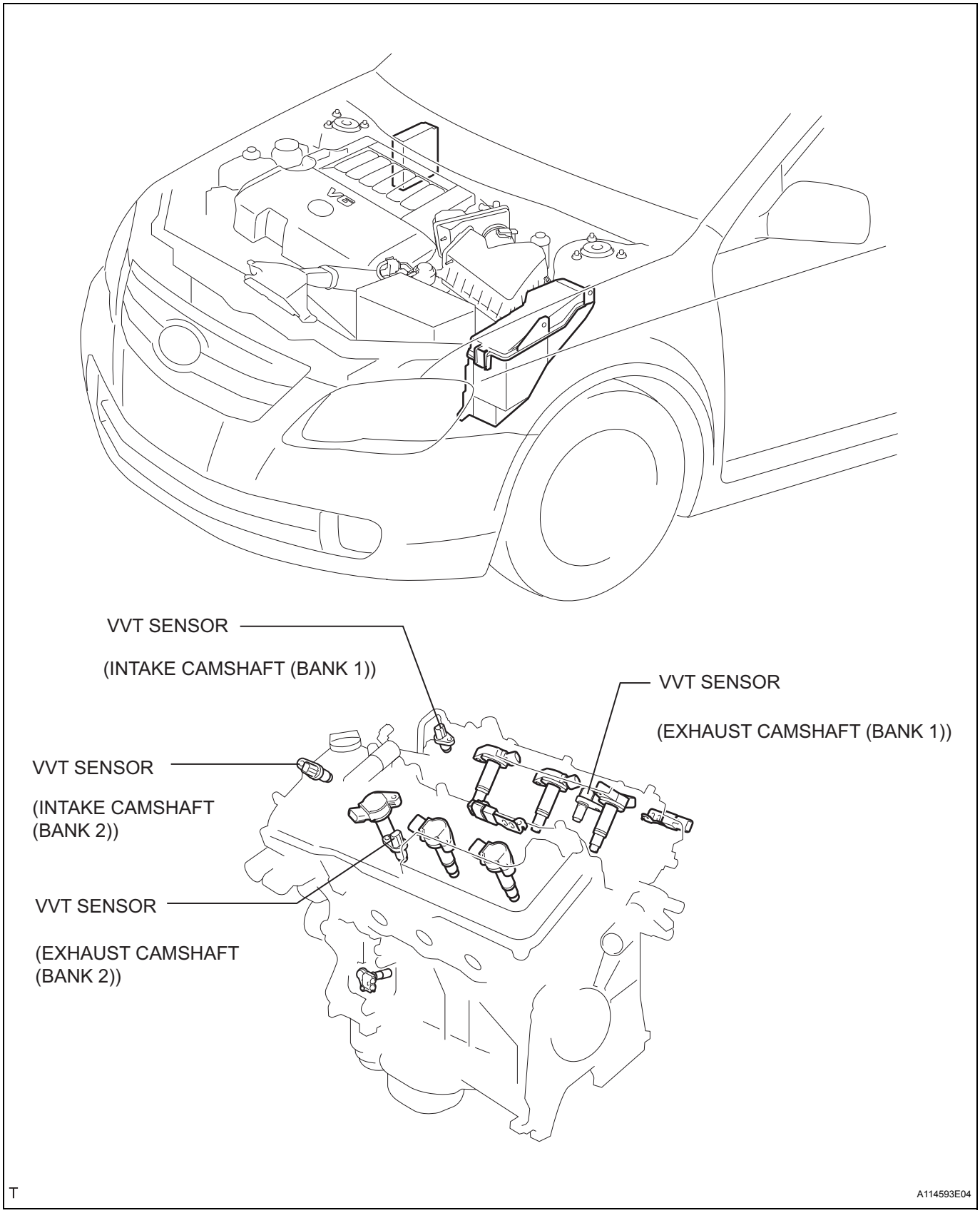

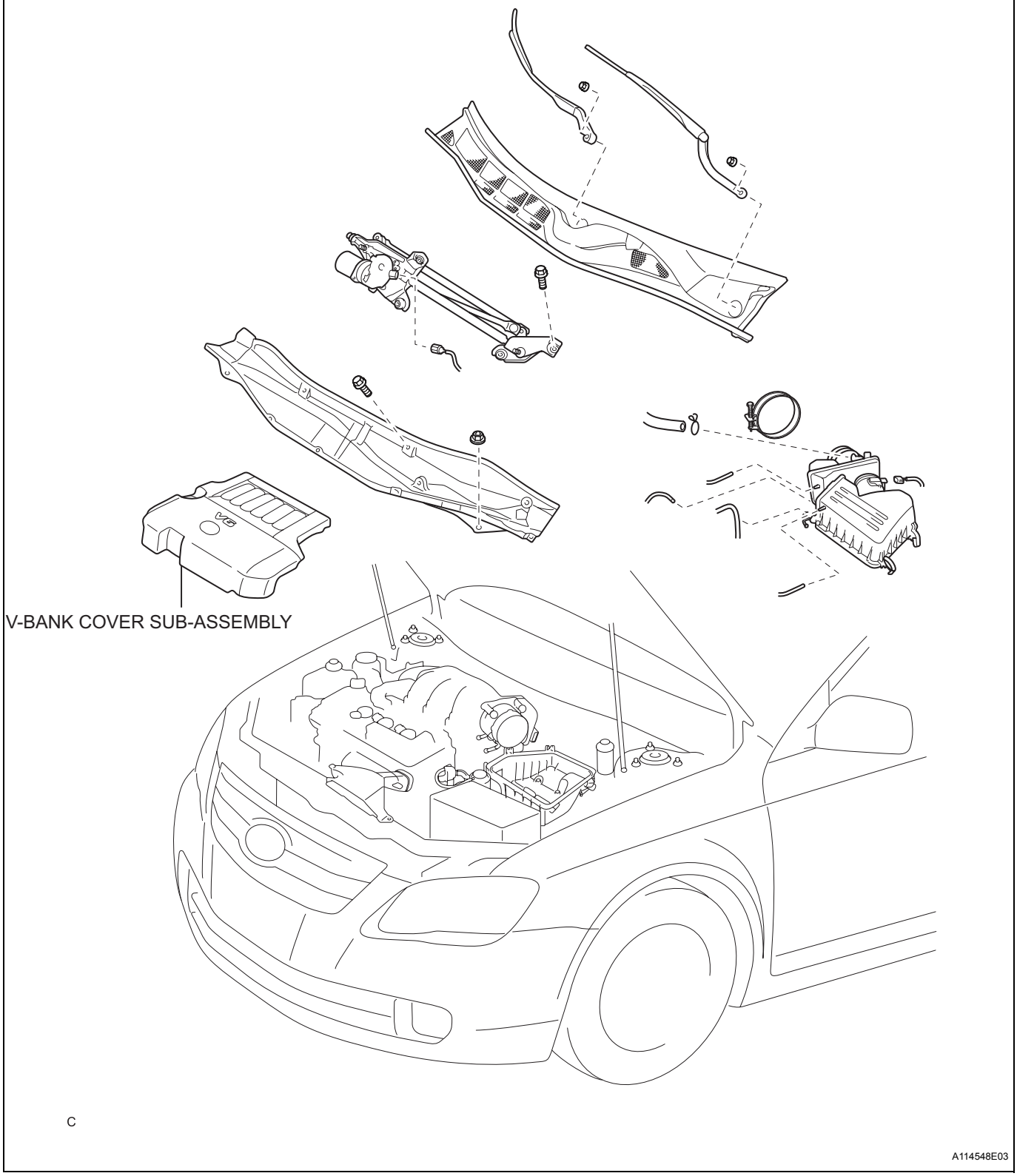
V-BANK COVER SUB-ASSEMBLY
C
A114548E03

REMOVAL

1. **REMOVE V-BANK COVER SUB-ASSEMBLY (See page EM-28)**

2. **REMOVE VVT SENSOR**

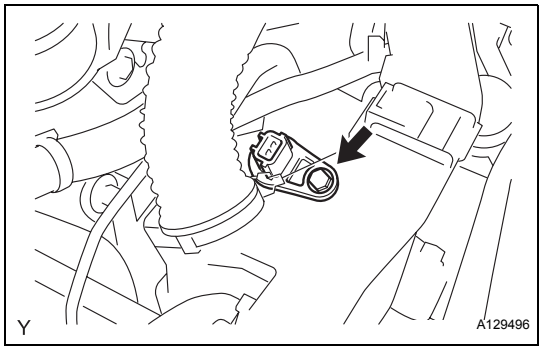

(a) Intake camshaft (Bank 1).
   (1) Disconnect the VVT sensor connector.
   (2) Remove the bolt and the VVT sensor.

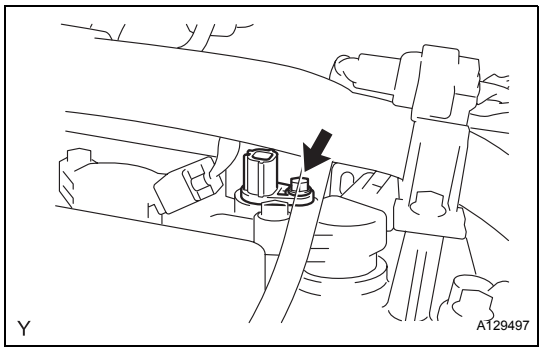

(b) Exhaust camshaft (Bank 1).
   (1) Remove the windshield wiper link assembly (See page WW-38).
   (2) Remove the cowl top outside panel front (See page BR-8).
   (3) Disconnect the VVT sensor connector.
   (4) Remove the bolt and the VVT sensor.

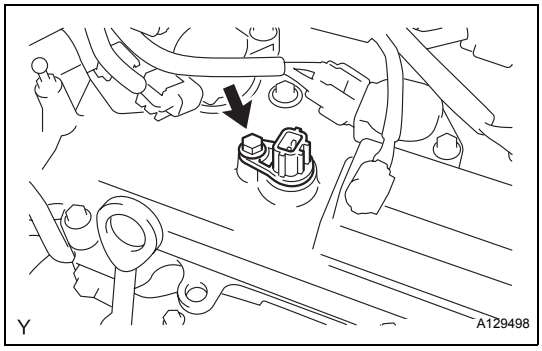

(c) Exhaust camshaft (Bank 2).
   (1) Disconnect the VVT sensor connector.
   (2) Remove the bolt and the VVT sensor.

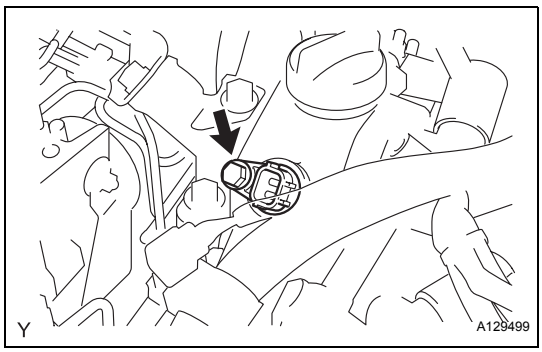

(d) Intake camshaft (Bank 2).
   (1) Disconnect the VVT sensor connector.
   (2) Remove the bolt and the VVT sensor.

INSTRUMENT PANEL SAFETY PAD

PRECAUTION

1. PRECAUTION FOR VEHICLE WITH SRS AIRBAG AND SEAT BELT PRETENSIONER

(a) Some operations in this section may affect the SRS airbag. Before performing the corresponding operations, please read the NOTICE of the SRS airbag to perform the proper operations (See page RS-1).

COMPONENTS

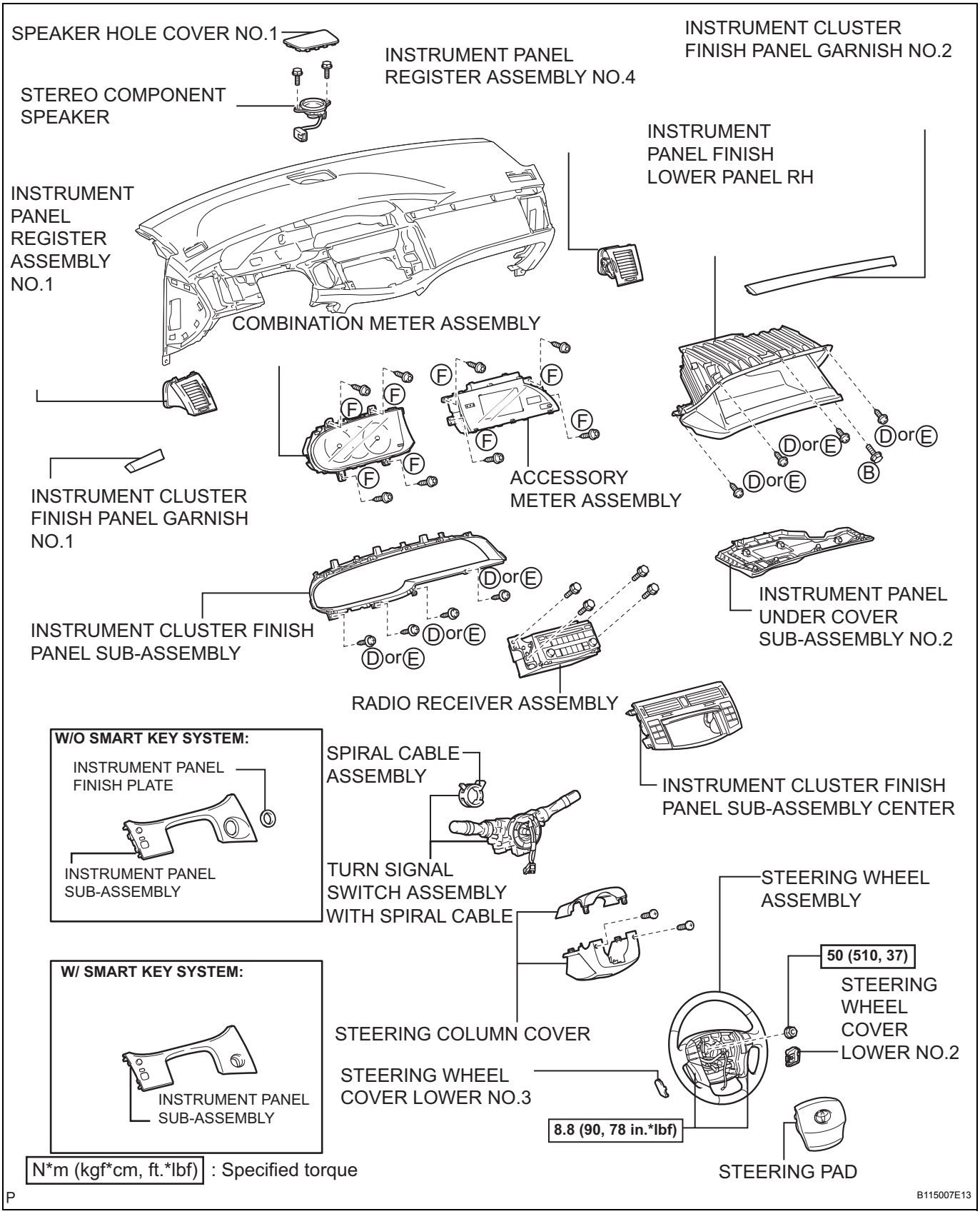

IP

P

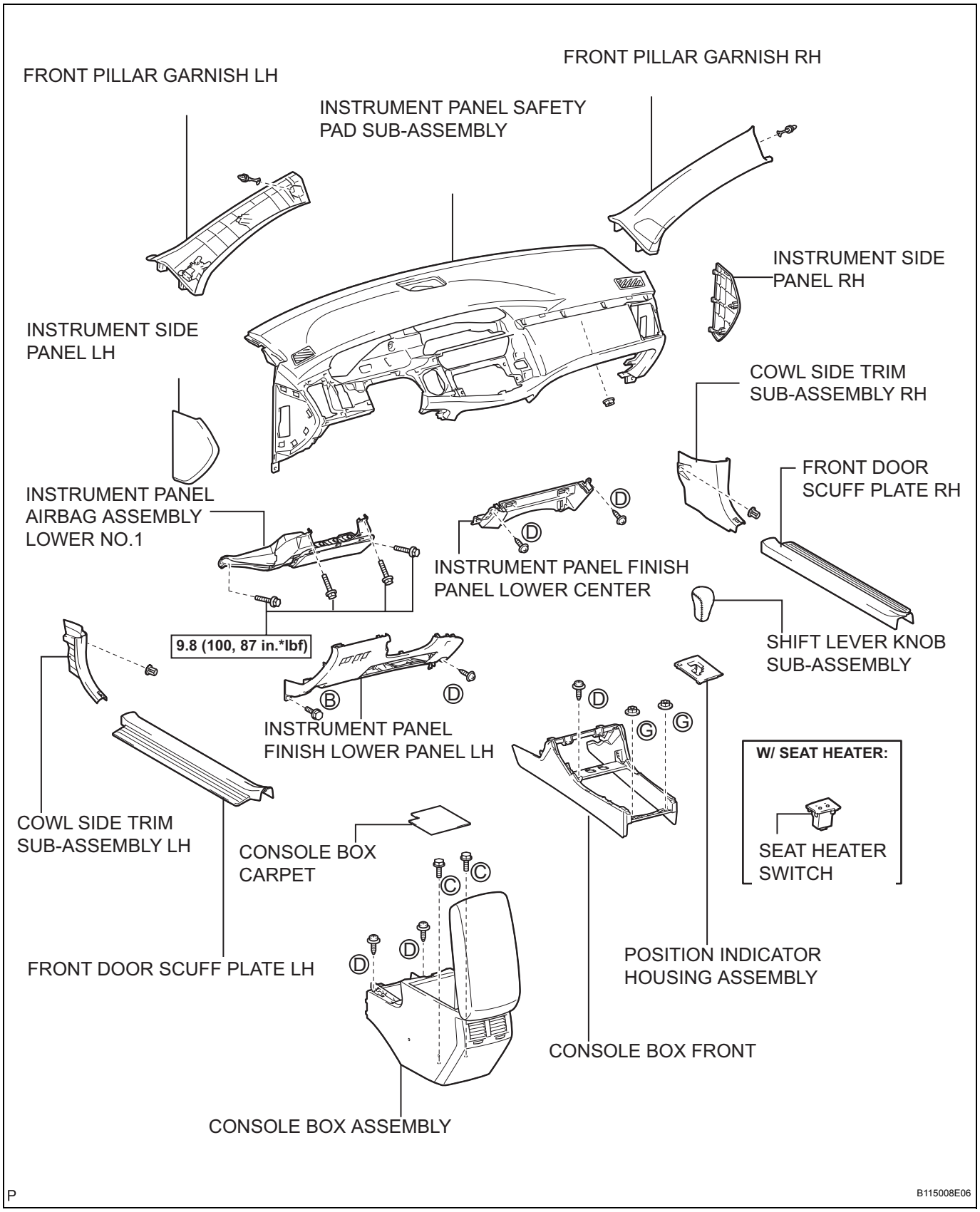
FRONT PILLAR GARNISH LH
FRONT PILLAR GARNISH RH
INSTRUMENT PANEL SAFETY PAD SUB-ASSEMBLY
INSTRUMENT SIDE PANEL RH
INSTRUMENT SIDE PANEL LH
COWL SIDE TRIM SUB-ASSEMBLY RH
FRONT DOOR SCUFF PLATE RH
INSTRUMENT PANEL AIRBAG ASSEMBLY LOWER NO.1
INSTRUMENT PANEL FINISH PANEL LOWER CENTER
SHIFT LEVER KNOB SUB-ASSEMBLY
9.8 (100, 87 in.*lbf)
INSTRUMENT PANEL FINISH LOWER PANEL LH
W/ SEAT HEATER:
SEAT HEATER SWITCH
COWL SIDE TRIM SUB-ASSEMBLY LH
CONSOLE BOX CARPET
FRONT DOOR SCUFF PLATE LH
POSITION INDICATOR HOUSING ASSEMBLY
CONSOLE BOX FRONT
CONSOLE BOX ASSEMBLY
P
B115008E06

IP

W/ BOX:

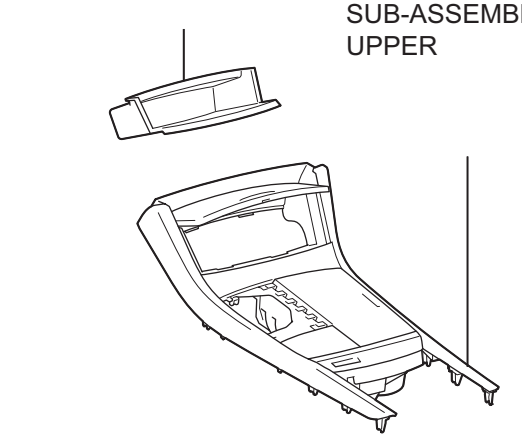

W/ TAPE PLAYER:

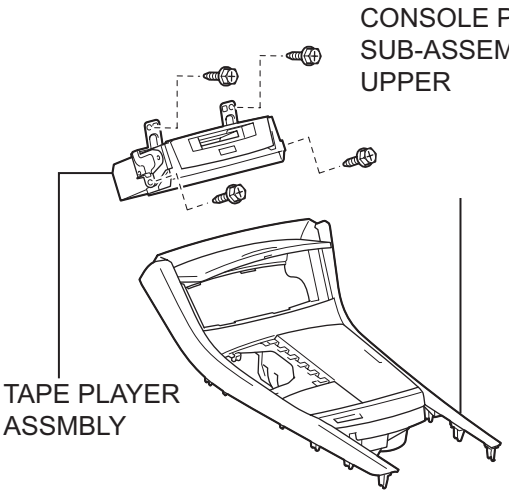

W/ ASH RECEPTACLE:

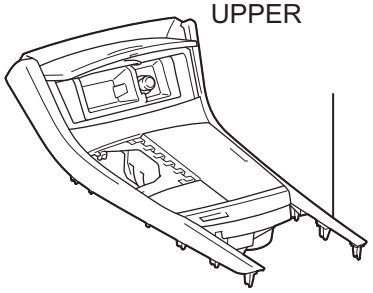

W/ NAVIGATION:

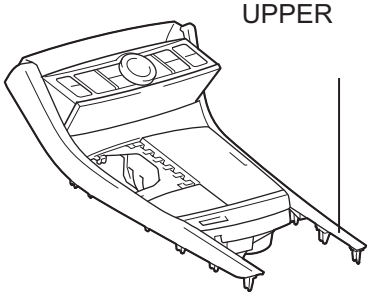

IP

P

B115054E04

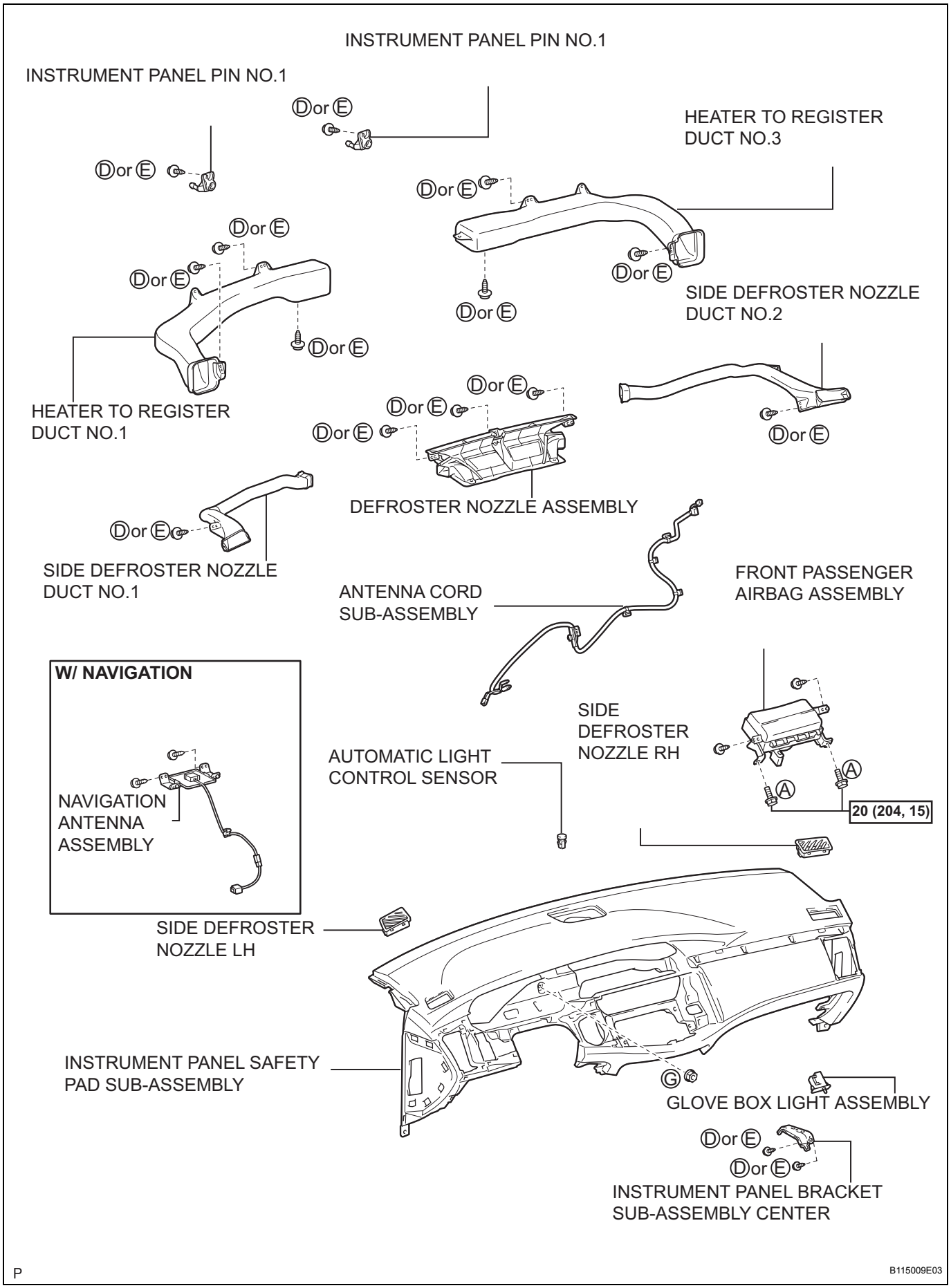
INSTRUMENT PANEL PIN NO.1
INSTRUMENT PANEL PIN NO.1
Ⓓor Ⓔ
Ⓓor Ⓔ
HEATER TO REGISTER DUCT NO.3
Ⓓor Ⓔ
Ⓓor Ⓔ
Ⓓor Ⓔ
Ⓓor Ⓔ
Ⓓor Ⓔ
SIDE DEFROSTER NOZZLE DUCT NO.2
Ⓓor Ⓔ
Ⓓor Ⓔ
Ⓓor Ⓔ
Ⓓor Ⓔ
HEATER TO REGISTER DUCT NO.1
Ⓓor Ⓔ
DEFROSTER NOZZLE ASSEMBLY
Ⓓor Ⓔ
Ⓓor Ⓔ
SIDE DEFROSTER NOZZLE DUCT NO.1
ANTENNA CORD SUB-ASSEMBLY
FRONT PASSENGER AIRBAG ASSEMBLY
W/ NAVIGATION
NAVIGATION ANTENNA ASSEMBLY
SIDE DEFROSTER NOZZLE RH
AUTOMATIC LIGHT CONTROL SENSOR
Ⓐ
Ⓐ
20 (204, 15)
SIDE DEFROSTER NOZZLE LH
INSTRUMENT PANEL SAFETY PAD SUB-ASSEMBLY
Ⓖ
GLOVE BOX LIGHT ASSEMBLY
Ⓓor Ⓔ
Ⓓor Ⓔ
INSTRUMENT PANEL BRACKET SUB-ASSEMBLY CENTER
P
B115009E03

IP

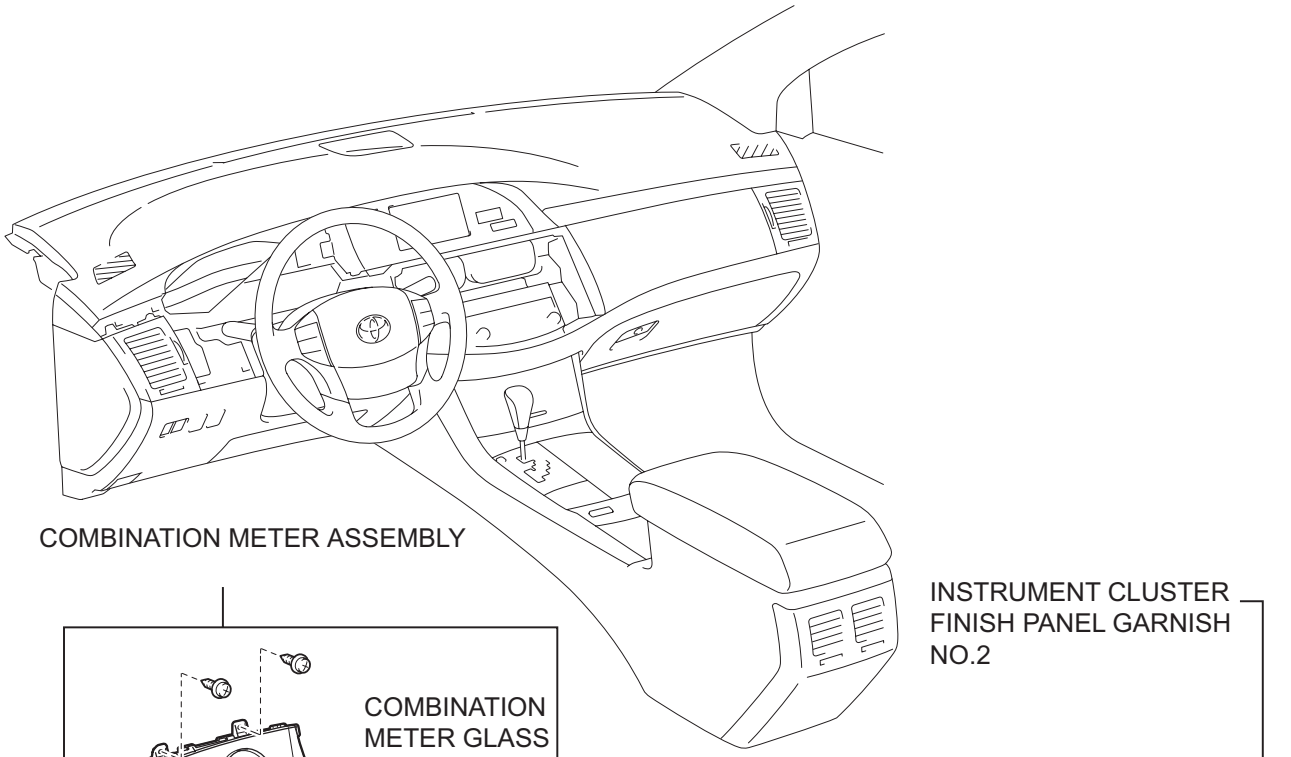

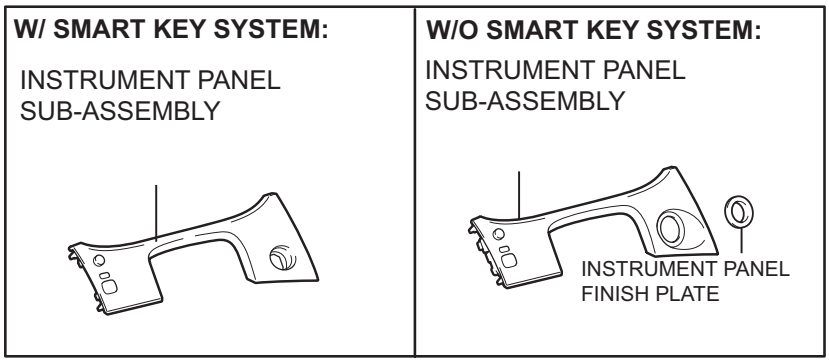

IP

P

B115010E03

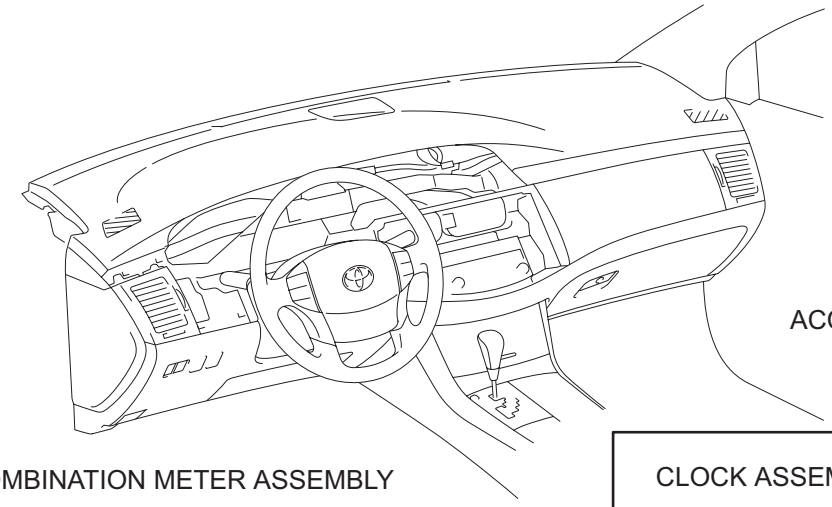

ACCESSORY METER ASSEMBLY

COMBINATION METER ASSEMBLY

CLOCK ASSEMBLY

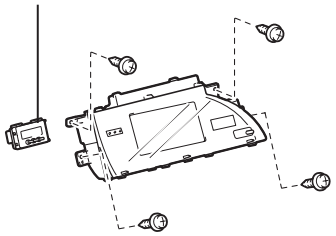

INSTRUMENT CLUSTER FINISH PANEL SUB-ASSEMBLY

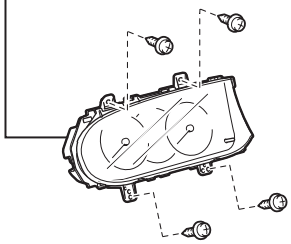

INSTRUMENT CLUSTER FINISH PANEL GARNISH NO.1

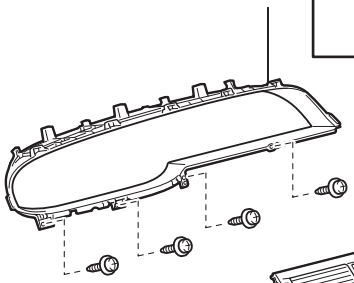



INSTRUMENT CLUSTER FINISH PANEL GARNISH NO.2

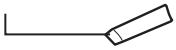

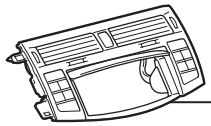

W/ SMART KEY SYSTEM:

INSTRUMENT PANEL SUB-ASSEMBLY

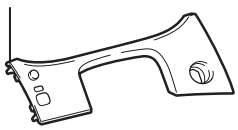

W/O SMART KEY SYSTEM:

INSTRUMENT PANEL SUB-ASSEMBLY

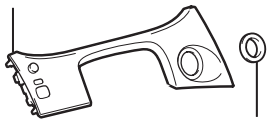

INSTRUMENT PANEL FINISH PLATE

INSTRUMENT CLUSTER FINISH PANEL SUB-ASSEMBLY CENTER

IP

P

B115011E05

REMOVAL

1. **BOLT, SCREW AND NUT TABLE**
   (a) The table of the bolt, screw and nut.

Code	Shape	Code	Shape	Code	Shape
<A>	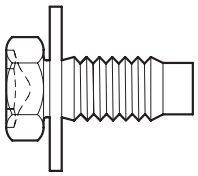 φ = 8 (0.32) L = 20 (0.79) 90119-A0011	<B>	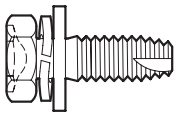 φ = 6 (0.24) L = 18 (0.71) 90080-11664	<C>	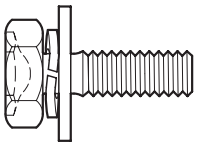 φ = 6 (0.20) L = 16 (0.63) 90080-11736
<D>	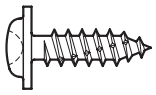 φ = 5 (0.20) L = 16 (0.63) 90080-16097	<E>	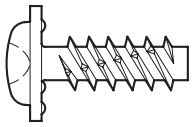 φ = 5 (0.20) L = 14 (0.55) 90167-A0005	<F>	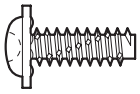 φ = 5 (0.20) L = 14 (0.55) 90167-50002
<G>	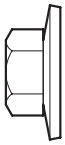 φ = 6 (0.24) 90080-18071				

P B131638E02

IP

HINT:
All bolts, screws and nuts relevant to installing and removing the instrument panel are shown along with their alphabet code in the table below.

2. **DISCONNECT CABLE FROM NEGATIVE BATTERY TERMINAL**
   CAUTION:
   Wait for 90 seconds after disconnecting the cable to prevent the airbag working.
3. **REMOVE STEERING WHEEL COVER LOWER NO.2 (See page RS-304)**
4. **REMOVE STEERING WHEEL COVER LOWER NO.3 (See page RS-304)**
5. **REMOVE STEERING PAD (See page RS-304)**
6. **REMOVE STEERING WHEEL ASSEMBLY (See page SR-36)**
7. **REMOVE STEERING COLUMN COVER (See page SR-36)**
8. **REMOVE TURN SIGNAL SWITCH ASSEMBLY (See page SR-36)**

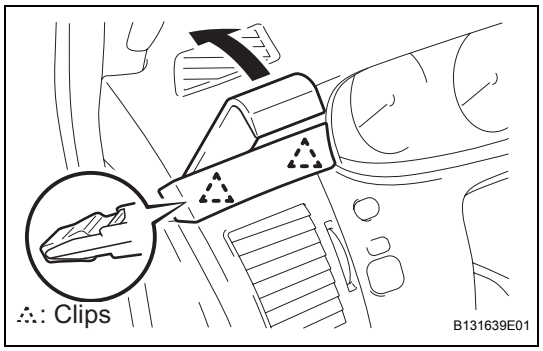

9. REMOVE INSTRUMENT CLUSTER FINISH PANEL GARNISH NO.1

(a) Using a moulding remover to disengage the 2 clips and remove the instrument cluster finish garnish No.1.

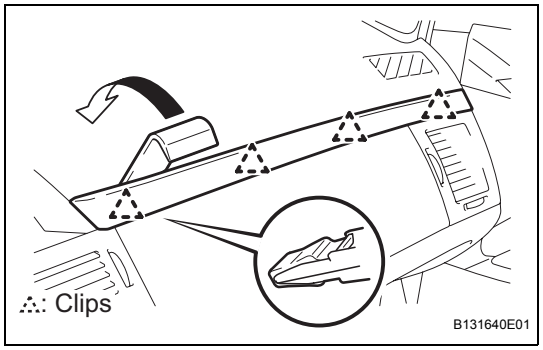

10. REMOVE INSTRUMENT CLUSTER FINISH PANEL GARNISH NO.2

(a) Using a moulding remover to disengage the 4 clips and remove the instrument cluster finish garnish No.2.

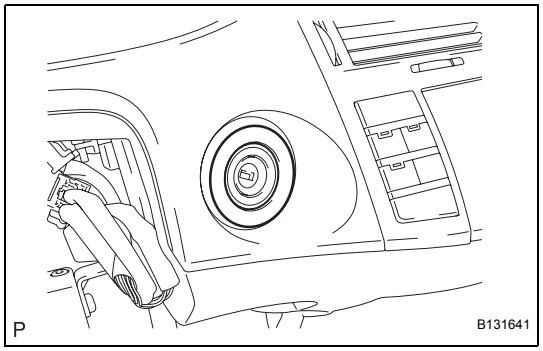

11. REMOVE INSTRUMENT PANEL FINISH PLATE (w/o Smart Key System)

(a) Remove the instrument panel finish plate.

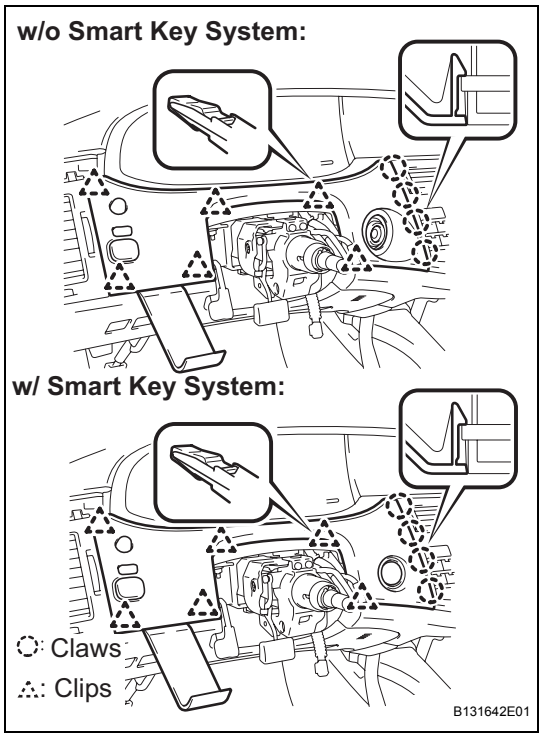

12. REMOVE INSTRUMENT PANEL SUB-ASSEMBLY

(a) Using a moulding remover, disengage the 4 claws and 6 clips then remove the instrument panel sub-assembly.

(b) Disconnect the connectors then remove the instrument panel sub-assembly.

13. REMOVE INSTRUMENT CLUSTER FINISH PANEL SUB-ASSEMBLY CENTER (See page AC-180)

14. REMOVE RADIO RECEIVER ASSEMBLY

IP

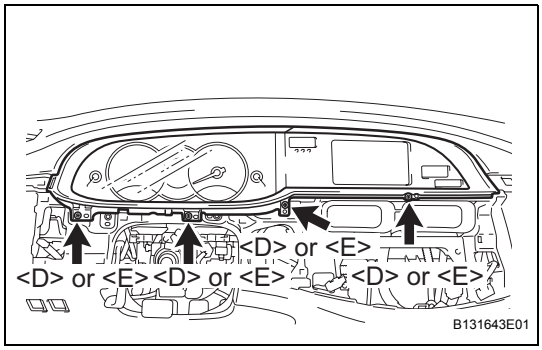

15. REMOVE INSTRUMENT CLUSTER FINISH PANEL SUB-ASSEMBLY

(a) Remove the 4 screws <D> or <E>.

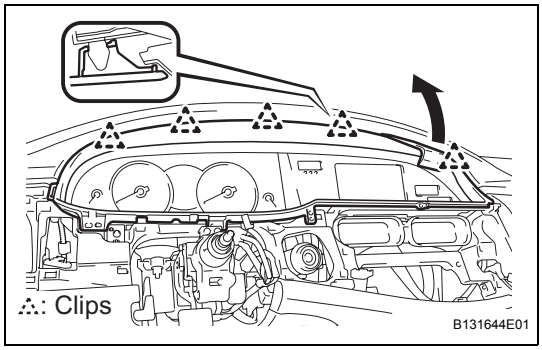

(b) Using a moulding remover, disengage the 5 clips and remove the instrument cluster finish panel sub-assembly.

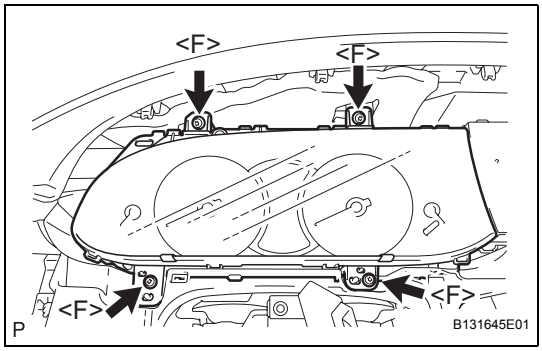

16. REMOVE COMBINATION METER ASSEMBLY

(a) Remove the 4 screws <F>.

(b) Pull out the combination meter assembly, then disconnect the connectors.

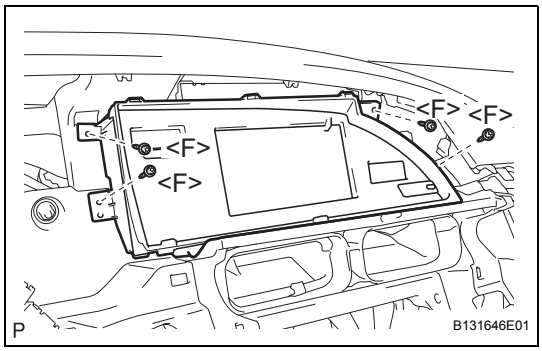

17. REMOVE ACCESSORY METER ASSEMBLY

(a) Remove the 4 screws <F>.

(b) Pull out the combination meter assembly, then disconnect the connectors.

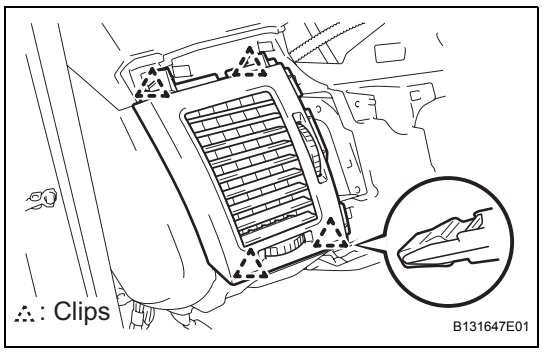

18. REMOVE INSTRUMENT PANEL REGISTER ASSEMBLY NO.1

(a) Disengage the 4 clips and remove the instrument panel register assembly No.1.

IP

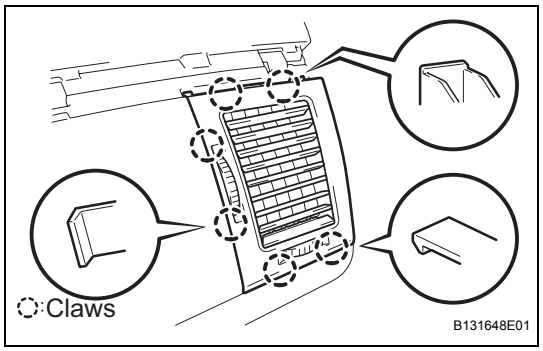

19. REMOVE INSTRUMENT PANEL REGISTER ASSEMBLY NO.4

(a) Disengage the 4 clips and remove the instrument panel register assembly No.4.

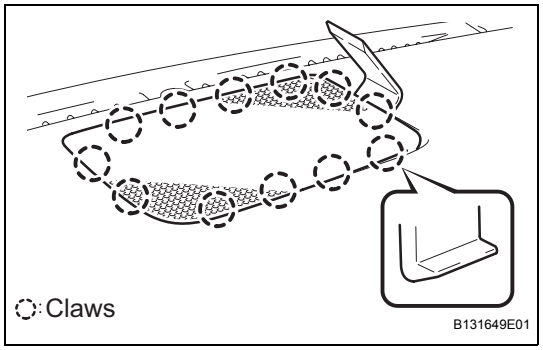

20. REMOVE SPEAKER HOLE COVER NO.1

(a) Using a moulding remover, disengage the 12 claws and remove the speaker hole cover No.1.

21. REMOVE STEREO COMPONENT SPEAKER (See page AV-180)

22. REMOVE COWL SIDE TRIM SUB-ASSEMBLY LH (See page IR-12)

23. REMOVE COWL SIDE TRIM SUB-ASSEMBLY RH (See page IR-12)

24. REMOVE FRONT DOOR SCUFF PLATE LH (See page IR-12)

25. REMOVE FRONT DOOR SCUFF PLATE RH (See page IR-12)

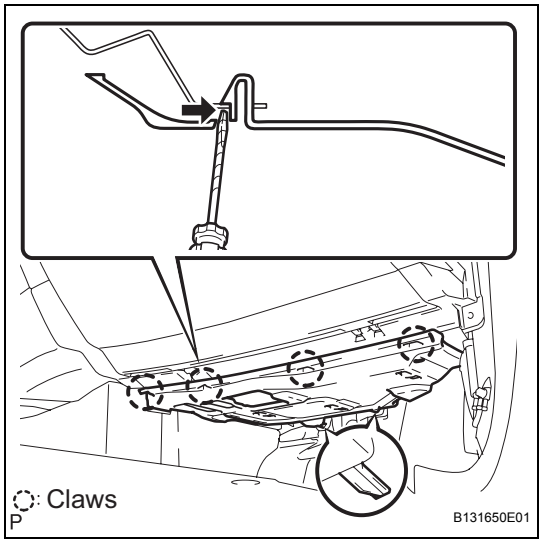

26. REMOVE INSTRUMENT PANEL UNDER COVER SUB-ASSEMBLY NO.2

(a) Push the 4 claws in the direction indicated by the arrow to disengage then and remove the guide on the front of the vehicle.

(b) Disconnect the connectors and remove the instrument panel under cover sub-assembly No.2.

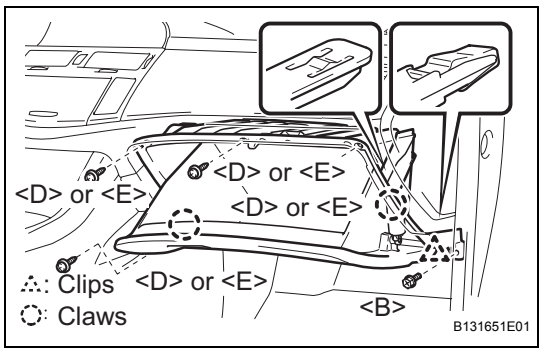

27. REMOVE INSTRUMENT PANEL FINISH LOWER PANEL RH

(a) Remove the bolt <B> and 4 screws <D> or <E>.

(b) Disengage the 2 claws and clip and remove the instrument panel finish lower panel RH.

IP

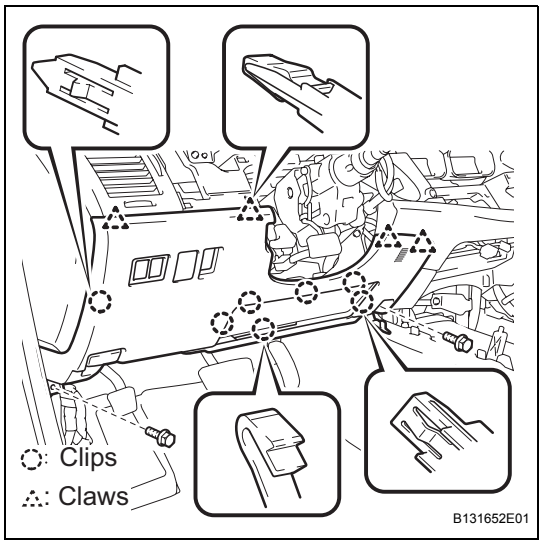

28. REMOVE INSTRUMENT PANEL FINISH LOWER PANEL LH

(a) Disconnect the hood lock control cable.
(b) Remove the bolt <B> and screw <D>.
(c) Disengage the 7 claws and 4 clips.
(d) Disconnect the connectors and remove the instrument panel finish lower panel LH.

29. REMOVE INSTRUMENT PANEL AIRBAG ASSEMBLY LOWER NO.1 (See page RS-320)

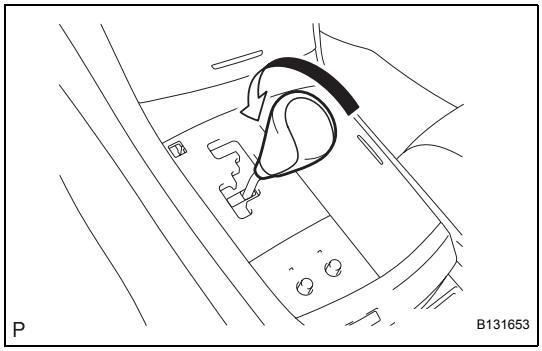

30. REMOVE SHIFT LEVER KNOB SUB-ASSEMBLY

(a) Turn the shift lever knob sub-assembly in the direction indicated by the arrow and remove it.

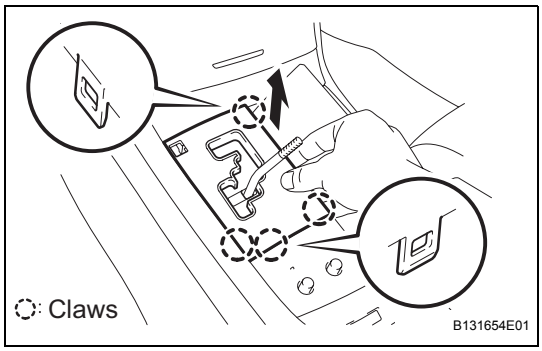

31. REMOVE POSITION INDICATOR HOUSING ASSEMBLY

(a) Disengage the 4 claws and remove the position indicator housing assembly.

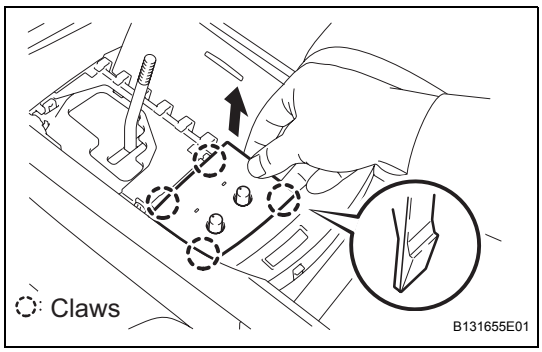

32. REMOVE SEAT HEATER SWITCH (w/ Seat Heater System)

(a) Disengage the 4 claws and remove the seat heater switch.

IP

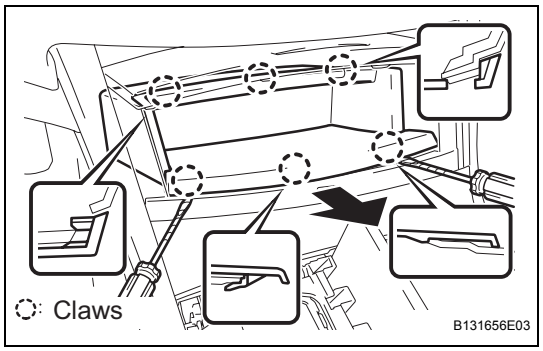

33. REMOVE CONSOLE PANEL SUB-ASSEMBLY UPPER

(a) Disengage the 6 claws and remove the console upper box (with box).

(b) Disengage the 10 clips.

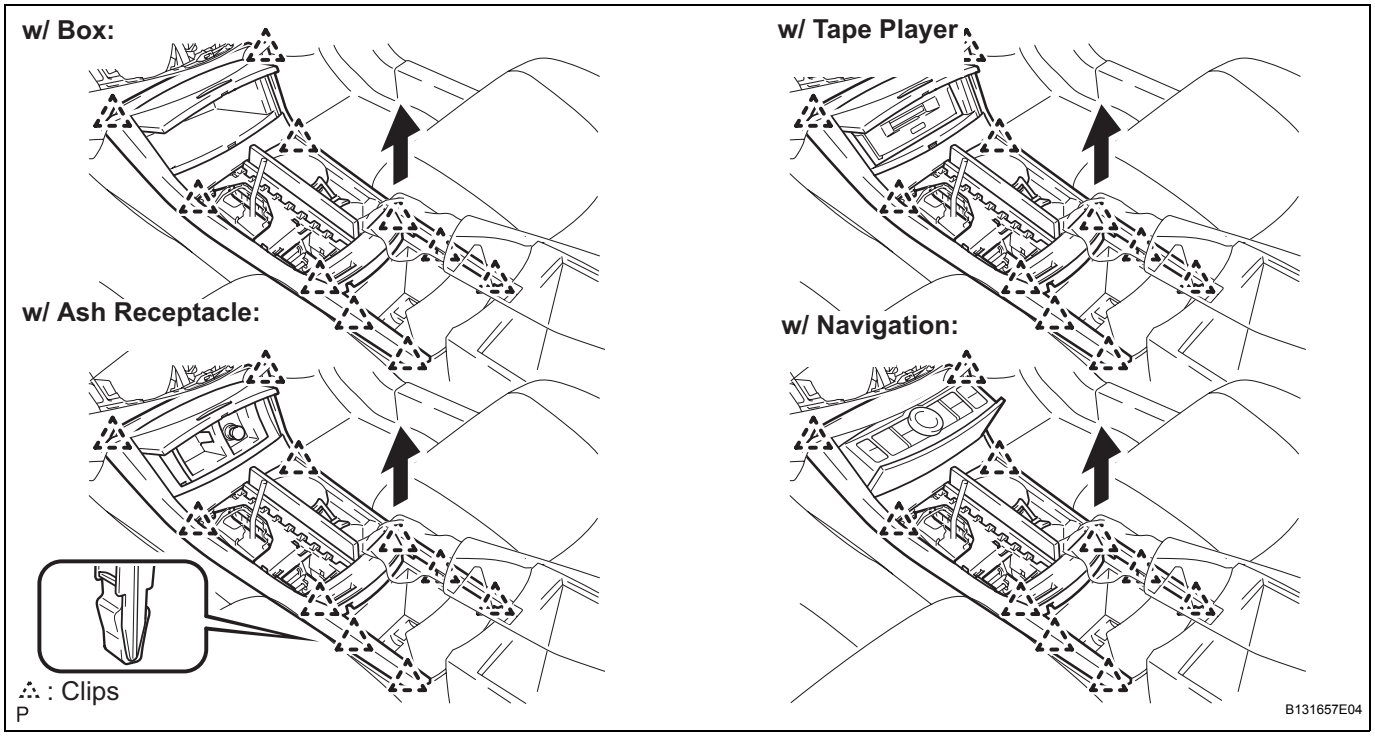

(c) Disconnect the connectors and remove the console upper panel sub-assembly.

(d) Remove the tape player assembly (with tape player) (See page AV-197).

34. REMOVE CONSOLE BOX CARPET

35. REMOVE CONSOLE BOX ASSEMBLY

(a) Disconnect the connector.

(b) Remove the 2 bolts <C> and 2 screws <D> then the console box assembly.

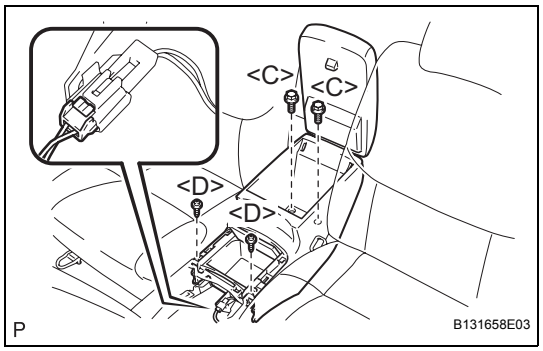

IP

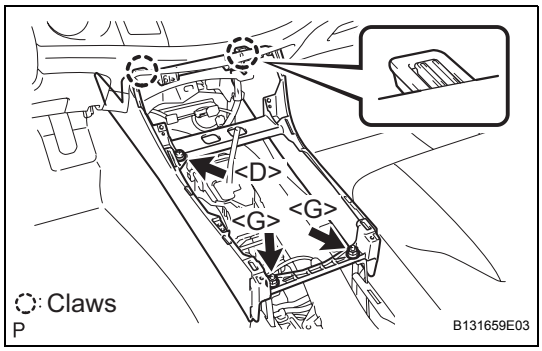

36. REMOVE CONSOLE BOX FRONT

(a) Remove the 2 nuts <G> and screw <D>.
(b) Disengage the 2 claws and remove the console front box.

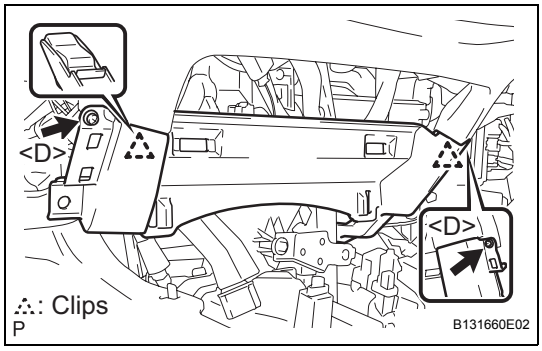

37. REMOVE INSTRUMENT PANEL FINISH PANEL LOWER CENTER

(a) Remove the 2 screws <D>.
(b) Disengage the 2 clips and remove the instrument panel finish lower panel center.

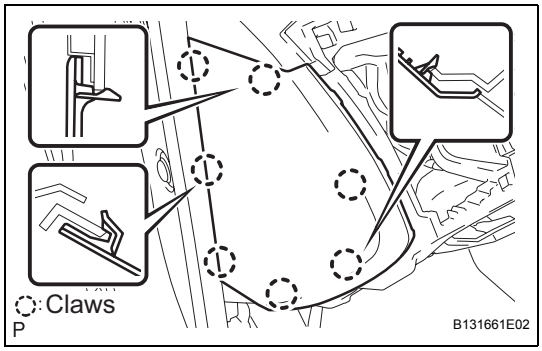

38. REMOVE INSTRUMENT SIDE PANEL LH

(a) Disengage the 7 claws and remove the instrument side panel LH.

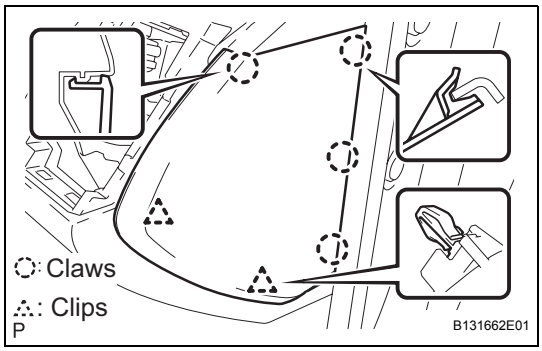

39. REMOVE INSTRUMENT SIDE PANEL RH

(a) Disengage the 4 claws and 2 clips then remove the instrument side panel RH.

40. REMOVE FRONT PILLAR GARNISH LH (See page IR-15)

41. REMOVE FRONT PILLAR GARNISH RH (See page IR-15)

42. DISCONNECT FRONT PASSENGER AIRBAG ASSEMBLY CONNECTOR (See page RS-329)

43. REMOVE INSTRUMENT PANEL SAFETY PAD SUB-ASSEMBLY

(a) Disconnect the connectors.
(b) Remove the 2 bolts <A> and 2 nuts <G>.
(c) Remove the 2 clamps.

IP

(d) Disengage the 5 claws and remove the instrument panel safety pad sub-assembly with front passenger airbag assembly.

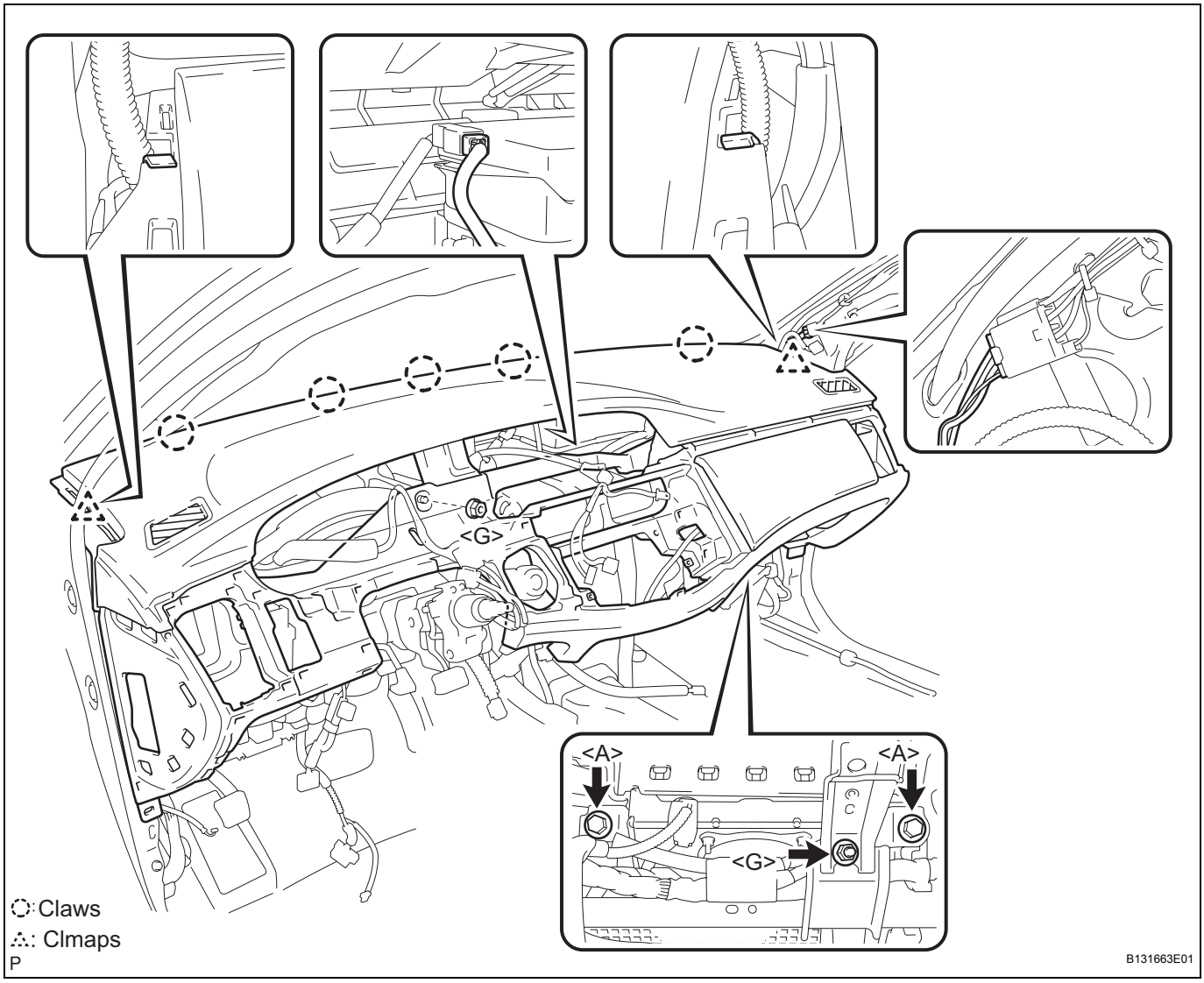

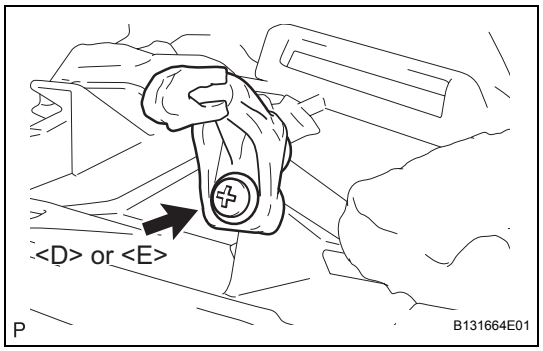

44. REMOVE INSTRUMENT PANEL PIN NO.1

(a) Remove the screw <D> or <E> and instrument panel pin No.1.

IP

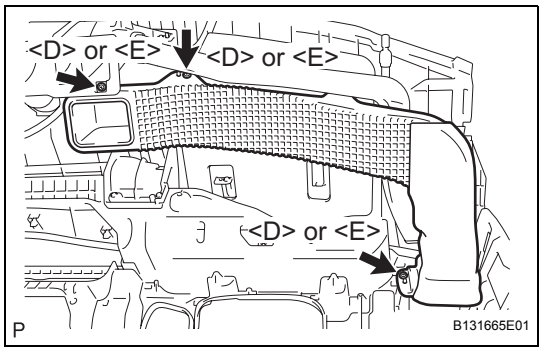

45. REMOVE HEATER TO REGISTER DUCT NO.1

(a) Remove the 3 screws <D> or <E> and heater to register duct No.1.

46. REMOVE HEATER TO REGISTER DUCT NO.3

HINT:

Use the same procedures for the heater to register duct No.3 and the heater to register duct No.1.

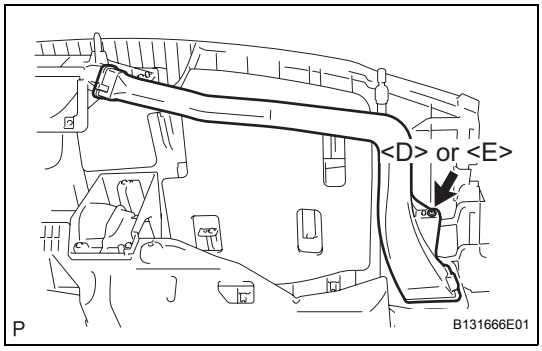

47. REMOVE SIDE DEFROSTER NOZZLE DUCT NO.1

(a) Remove the screw <D> or <E> and side defroster nozzle duct No.1.

48. REMOVE SIDE DEFROSTER NOZZLE DUCT NO.2

HINT:

Use the same procedures for the side defroster nozzle duct No.2 and the side defroster nozzle duct No.1.

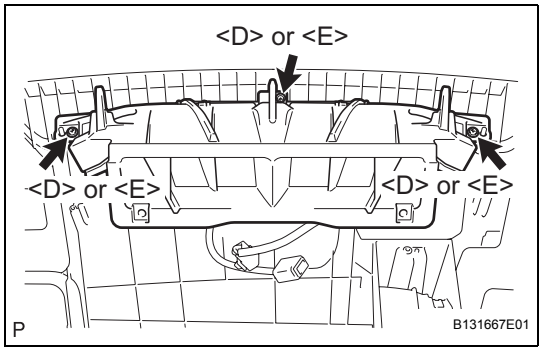

49. REMOVE DEFROSTER NOZZLE ASSEMBLY

(a) Remove the 3 screws <D> or <E> and defroster nozzle assembly.

IP

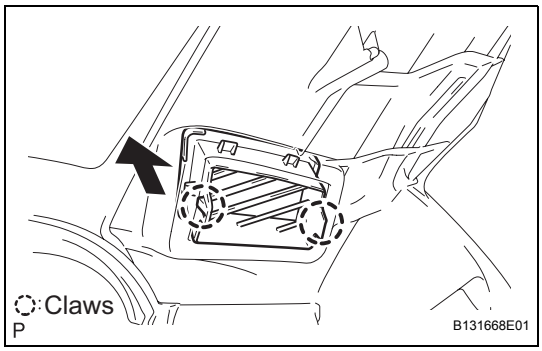

50. REMOVE SIDE DEFROSTER NOZZLE LH

(a) Disengage the 2 claws and remove the side defroster nozzle LH.

51. REMOVE SIDE DEFROSTER NOZZLE RH

HINT:

Use the same procedures for the side defroster nozzle RH and the side defroster nozzle LH.

52. REMOVE INSTRUMENT PANEL BRACKET SUB-ASSEMBLY CENTER

(a) Remover the 2 screws <D> or <E> and instrument panel bracket sub-assembly center.

53. REMOVE FRONT PASSENGER AIRBAG ASSEMBLY (See page RS-329)

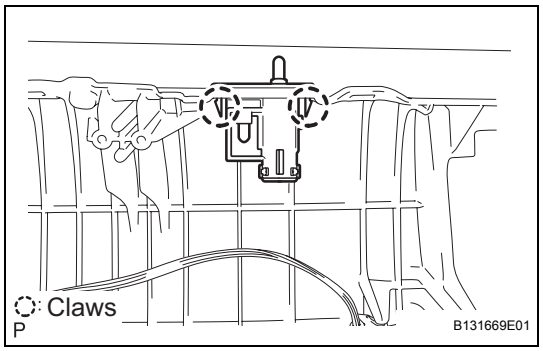

54. **REMOVE GLOVE BOX LIGHT ASSEMBLY**
    (a) Disengage the 2 claws and remove the glove box light assembly.

55. **REMOVE ANTENNA CORD SUB-ASSEMBLY (See page AV-203)**

56. **REMOVE NAVIGATION ANTENNA ASSEMBLY (See page NS-178)**

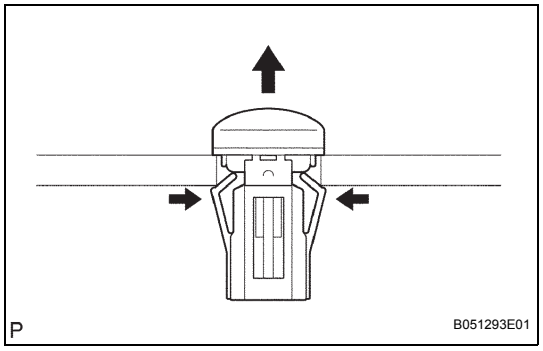

57. **REMOVE AUTOMATIC LIGHT CONTROL SENSOR**
    (a) Remove automatic light control sensor.
    NOTICE:
    Do not pry the automatic light control sensor off from the upper position.

58. **REMOVE INSTRUMENT PANEL SAFETY PAD SUB-ASSEMBLY**

INSTALLATION

1. **INSTALL INSTRUMENT PANEL SAFETY PAD SUB-ASSEMBLY**
   (a) Engage the 5 claws.
   (b) Install the 2 bolts <A> and 2 nuts <G>.

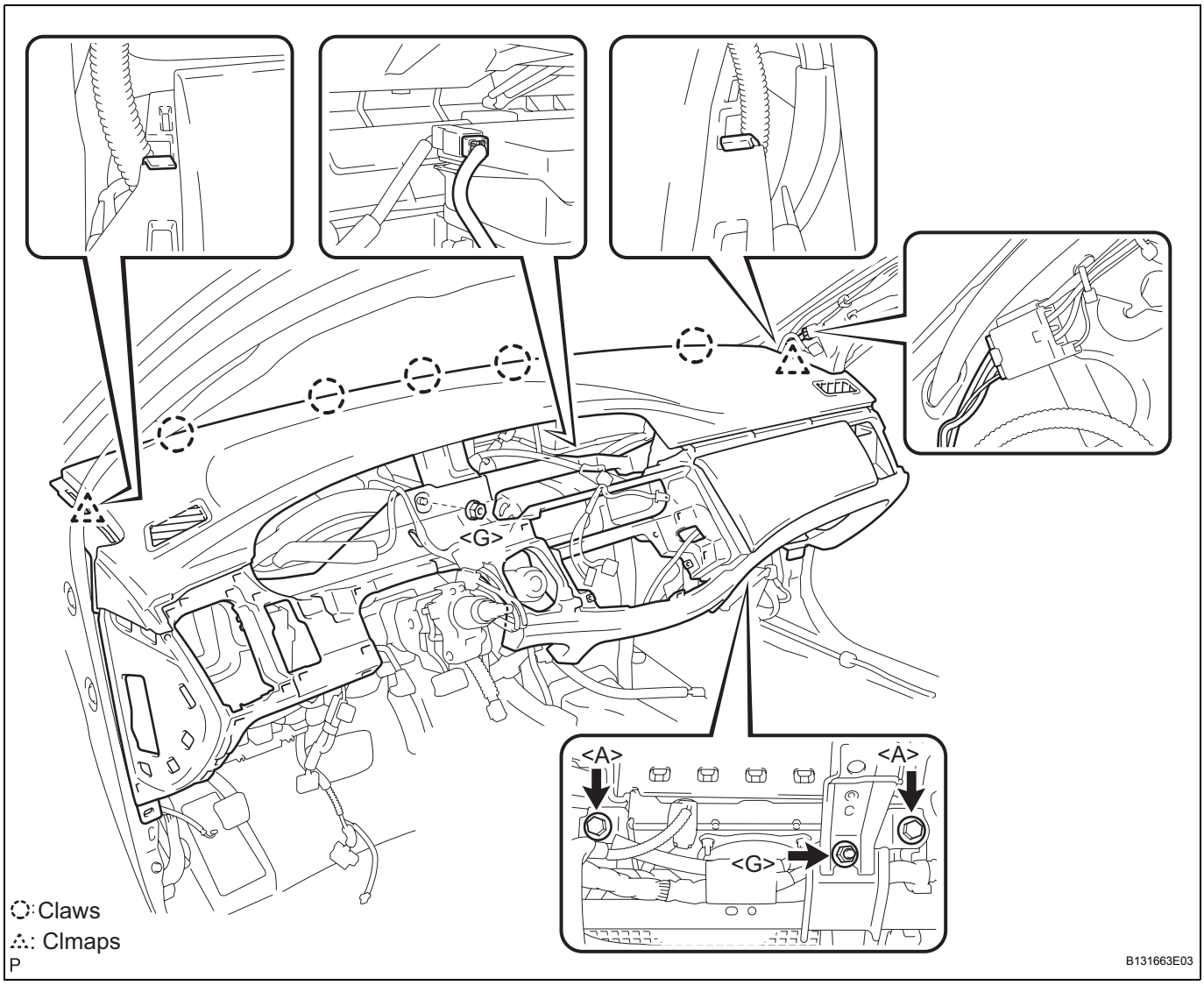

   (c) Install the 2 clamps.
   Torque: Bolt <A>
   20 N*m (204 kgf*cm, 15 ft.*lbf)

2. **ADJUST SPIRAL CABLE**
3. **INSTALL STEERING WHEEL ASSEMBLY**
4. **INSTALL HORN BUTTON ASSEMBLY**
5. **CONNECT BATTERY NEGATIVE TERMINAL**
6. **PERFORM INITIALIZATION**
   (a) Some systems need initialization when disconnecting the cable from the negative battery terminal (See page IN-29).

IP

7. **INSPECT STEERING PAD**
HINT:
(See page RS-303).

8. **INSPECT SRS WARNING LIGHT**
HINT:
(See page RS-28).

INTAKE AIR CONTROL SYSTEM

PRECAUTION

1. EXPRESSIONS OF IGNITION SWITCH

The type of ignition switch used on this model differs according to the specifications of the vehicle.
The expressions listed in the table below are used in this section.

Switch Type		Ignition Switch (position)	Engine Switch (condition)
Expression	Ignition Switch off	LOCK	Off
	Ignition Switch on (IG)	ON	On (IG)
	Ignition Switch on (ACC)	ACC	On (ACC)
	Engine Start	START	Start

PARTS LOCATION

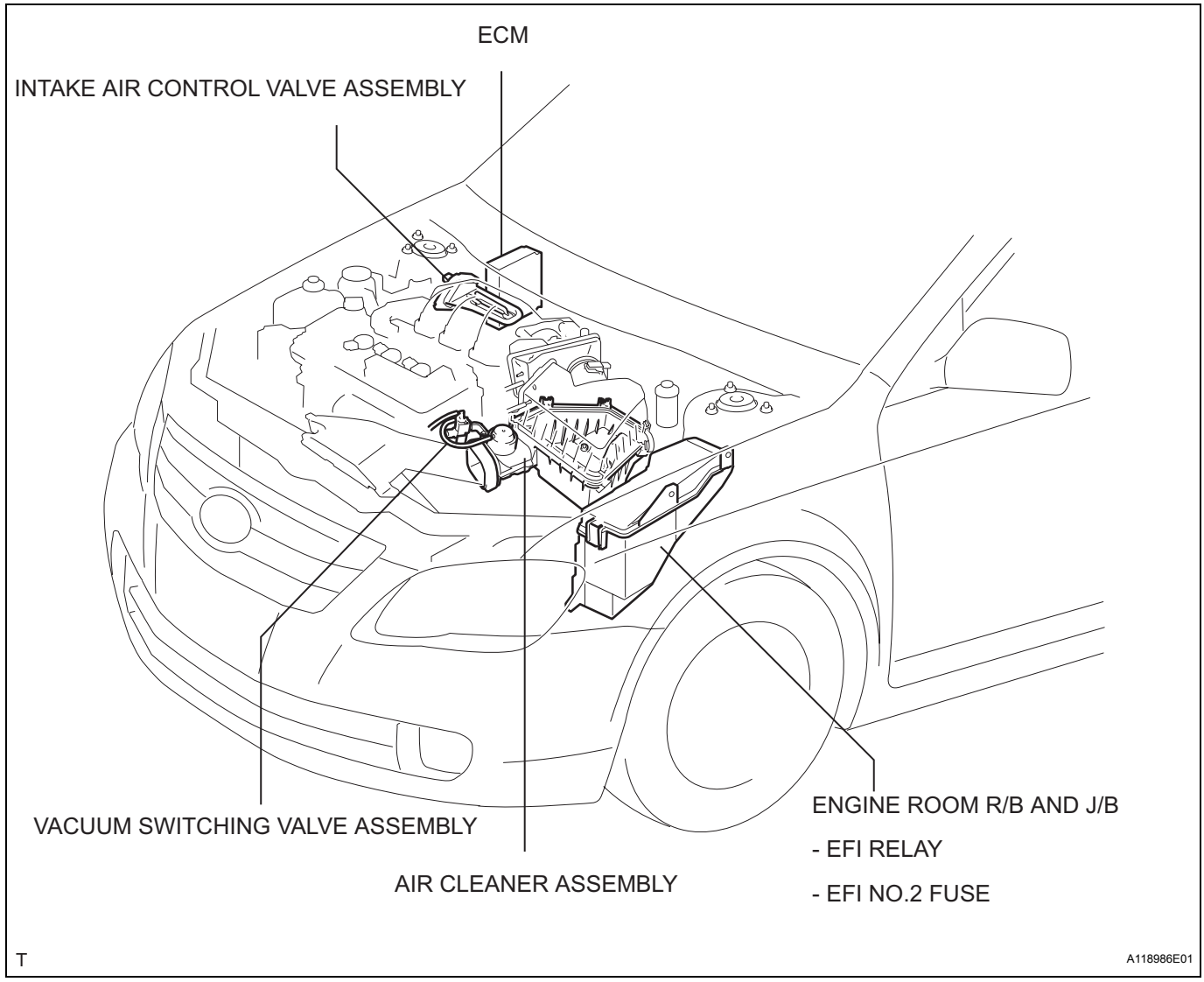

SYSTEM DIAGRAM

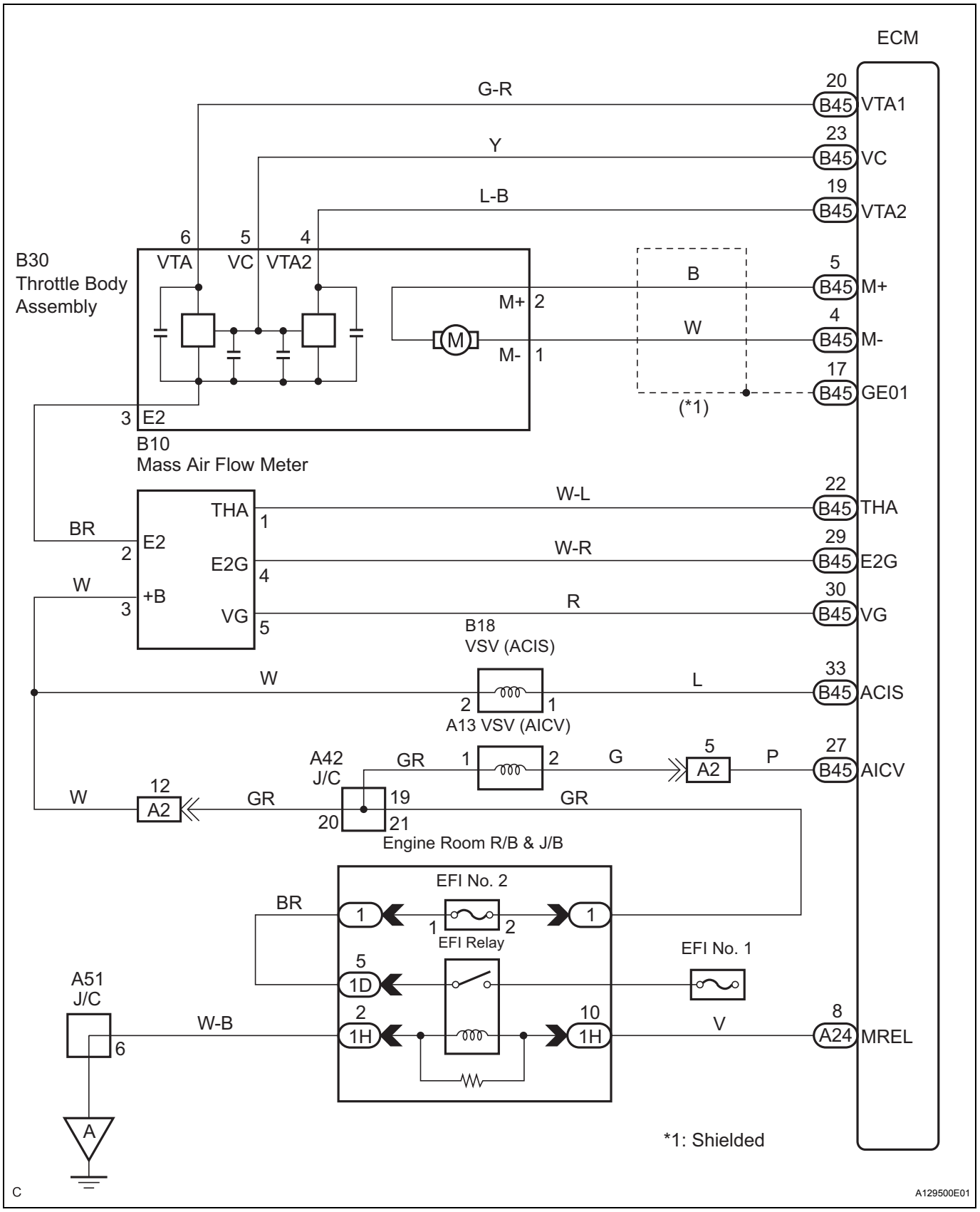

IT

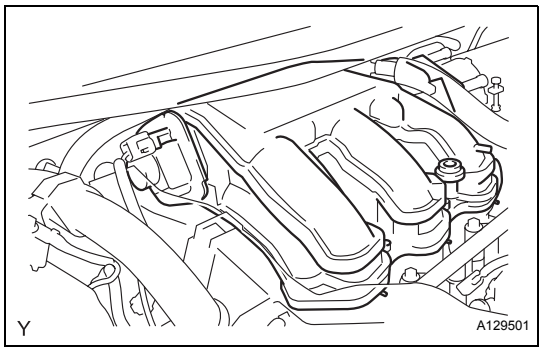

ON-VEHICLE INSPECTION

1. INSPECT INTAKE AIR CONTROL VALVE ASSEMBLY

(a) Inspection procedure when using the intelligent tester
  (1) Warm up the engine.
  (2) Stop the engine.
  (3) Connect the intelligent tester to the DLC3.
  (4) Turn the ignition switch on (IG).
  (5) Turn the tester ON.
  (6) Select the following menu items: DIAGNOSIS / ENHANCED OBD II / ACTIVE TEST / INTAKE CTL VSV1. Press the right or left button.
  (7) Make sure that a clicking sound is heard from the intake air control valve when current flows. If the result is not as specified, replace intake air surge tank.

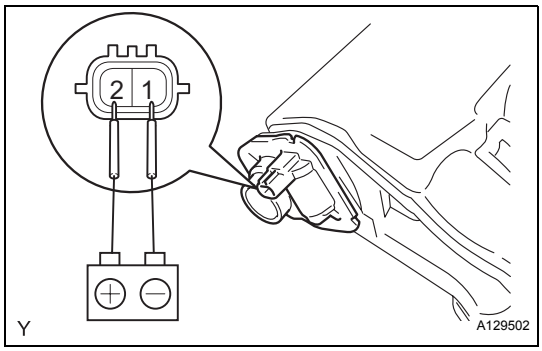

INSPECTION

1. INSPECT INTAKE AIR CONTROL VALVE

(a) Inspection procedure when applying voltage between terminals.
  (1) Disconnect the connector from the intake air control valve.
  (2) Apply battery voltage between terminals 1 (-) and 2 (+) of the intake air control valve. Check that a clicking sound is heard from the intake air control valve.
  If the result is not as specified, replace the intake air surge tank.

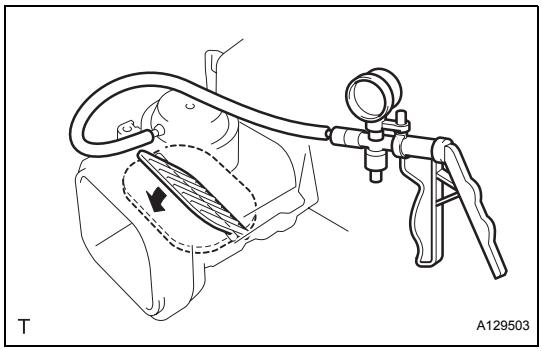

2. INSPECT AIR CLEANER ASSEMBLY

(a) Apply 26.6 kPa (200 mmHg, 7.9 in. Hg) of vacuum to the actuator. Check if the valve rotates open, as shown in the illustration.
(b) Apply the vacuum for 1 minute. The actuator should continue to keep the valve open.
  If the result is not as specified, replace the air cleaner assembly.

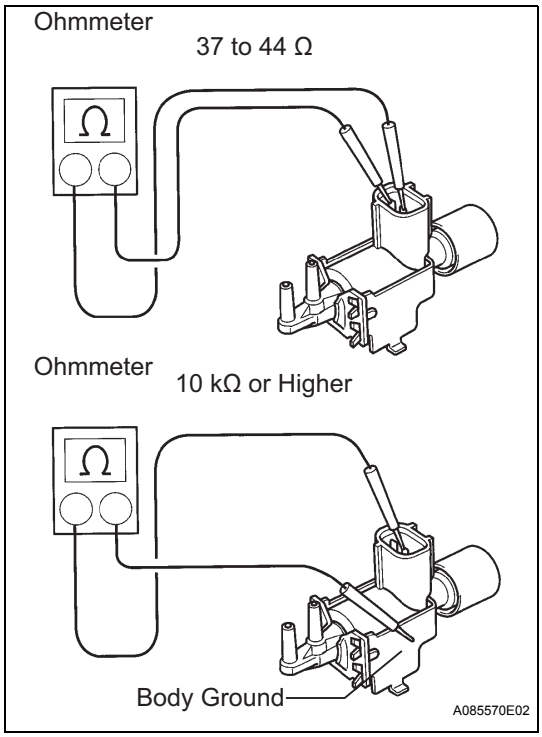

VACUUM SWITCHING VALVE

INSPECTION

1. INSPECT VACUUM SWITCHING VALVE

(a) Check the VSV resistance.

Resistance

Tester Connection	Specified Condition
1-2	37 to 44 Ω at 20 °C (68°F)
1 - Body ground 2 - Body ground	10 kΩ or higher

If the result is not as specified, replace the VSV.

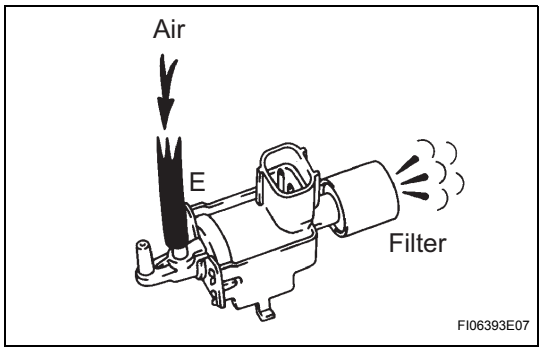

(b) Check VSV operation.

(1) Check that air flows from port E to the filter.

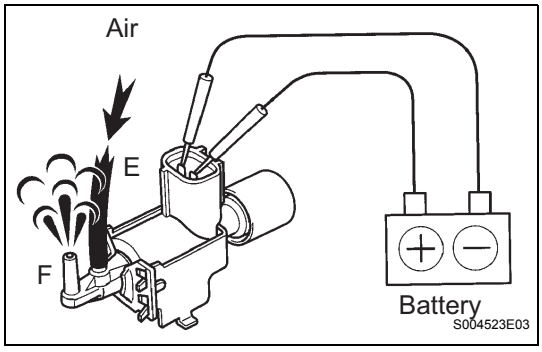

(2) Apply battery voltage across the terminals.
Check that air flows from port E to port F.
If the result is not as specified, replace the VSV.

IT

REAR SUNSHADE ASSEMBLY

COMPONENTS

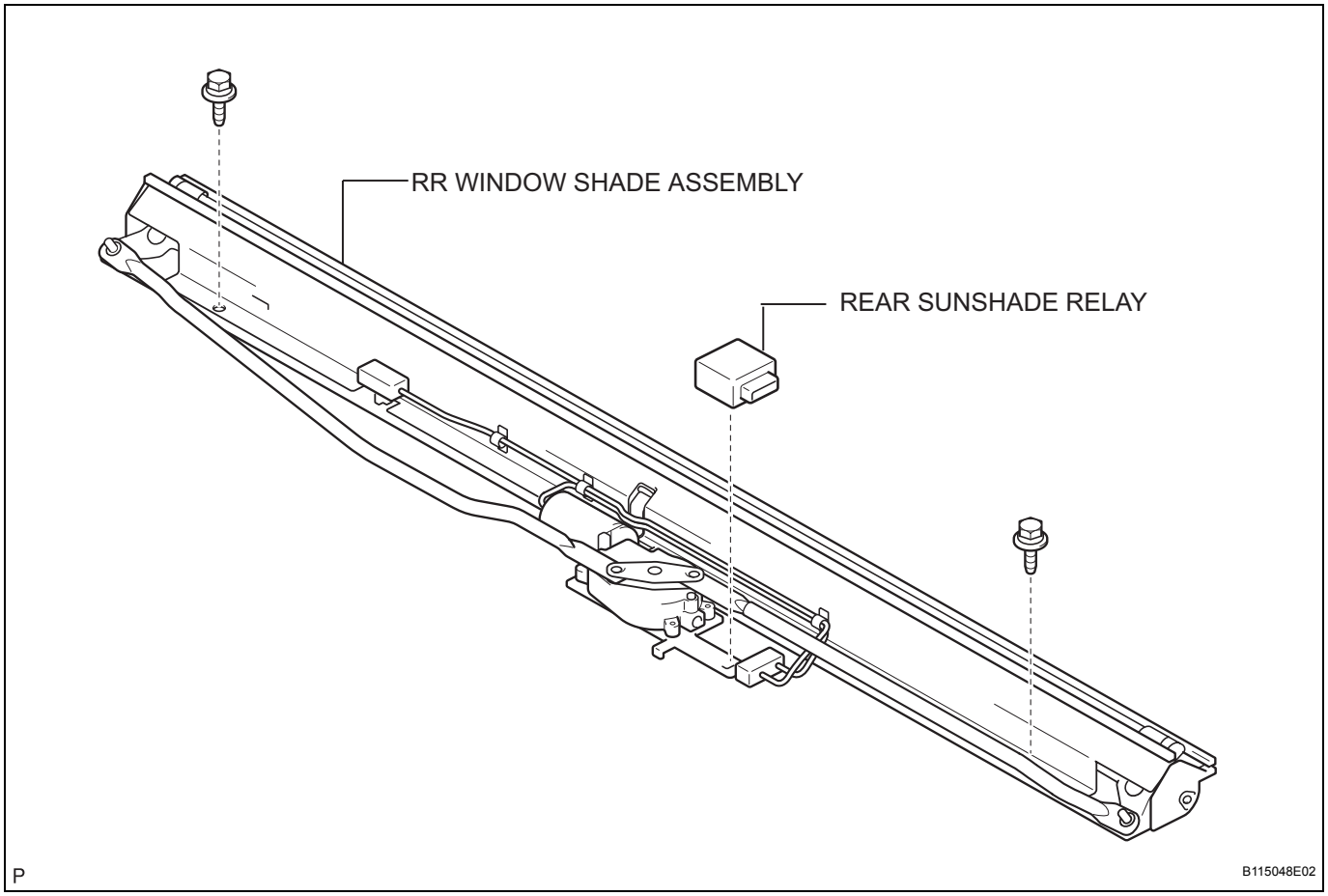

REMOVAL

1. **DISCONNECT CABLE FROM NEGATIVE BATTERY TERMINAL**
   (a) Wait for 90 seconds after disconnecting the cable to prevent the airbag working.
2. **REMOVE BENCH TYPE REAR SEAT CUSHION ASSEMBLY (See page SE-68)**
3. **REMOVE REAR DOOR SCUFF PLATE LH (See page IR-12)**
4. **REMOVE REAR DOOR SCUFF PLATE RH (See page IR-12)**
5. **REMOVE REAR DOOR OPENING TRIM WEATHERSTRIP LH**
6. **REMOVE REAR DOOR OPENING TRIM WEATHERSTRIP RH**
7. **REMOVE REAR SEAT SIDE GARNISH LH (See page IR-14)**
8. **REMOVE REAR SEAT SIDE GARNISH RH (See page IR-15)**
9. **REMOVE ROOF SIDE GARNISH ASSEMBLY INNER LH (See page IR-14)**
10. **REMOVE ROOF SIDE GARNISH ASSEMBLY INNER RH (See page IR-14)**
11. **SEPARATE REAR OUTER SEAT BELT ASSEMBLY (See page SB-25)**
12. **SEPARATE REAR SEAT INNER WITH CENTER BELT ASSEMBLY RH (See page SB-33)**
13. **SEPARATE REAR OUTER SEAT BELT ASSEMBLY (See page SB-25)**
14. **REMOVE PACKAGE TRAY TRIM PANEL ASSEMBLY (See page SB-31)**
15. **REMOVE RR WINDOW SHADE ASSEMBLY**
    (a) Remove the 2 bolts and the RR window shade assembly.
        (1) Disengage the claw and remove the rear sunshade relay.

INSTALLATION

1. **INSTALL REAR OUTER SEAT BELT ASSEMBLY (See page SB-25)**
2. **INSTALL REAR SEAT INNER WITH CENTER BELT ASSEMBLY RH (See page SB-33)**
3. **INSTALL REAR OUTER SEAT BELT ASSEMBLY (See page SB-25)**
4. **INSTALL ROOF SIDE GARNISH ASSEMBLY INNER RH (See page IR-19)**
5. **INSTALL ROOF SIDE GARNISH ASSEMBLY INNER LH (See page IR-19)**
6. **CONNECT CABLE FROM NEGATIVE BATTERY TERMINAL**
7. **PERFORM INITIALIZATION**
   (a) Some systems need initialization when disconnecting the cable from the negative battery terminal.
   HINT:
   See page IN-29
8. **INSPECT SRS WARNING LIGHT**
   HINT:
   See page RS-28

ROOF HEADLINING

COMPONENTS

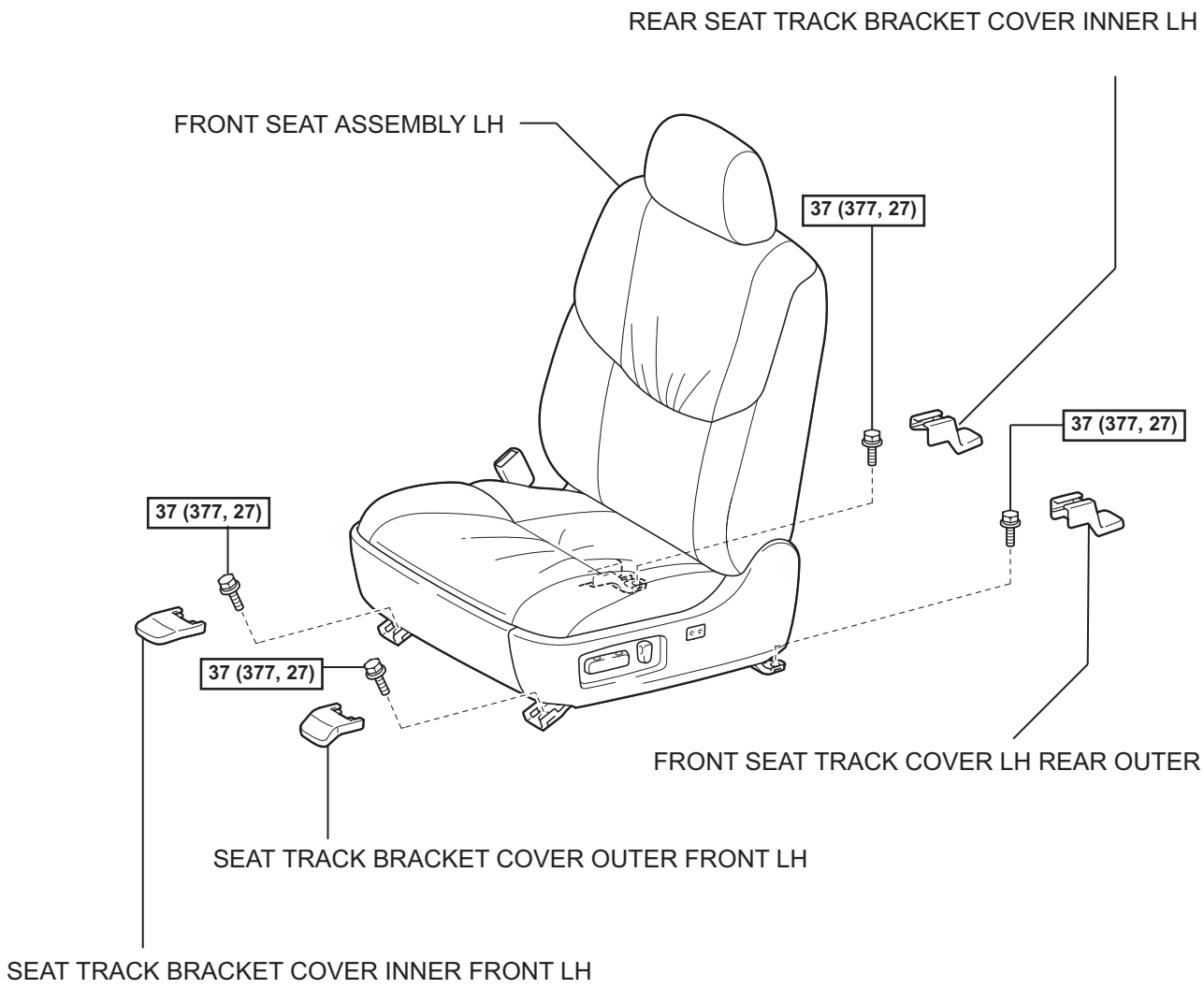

N*m (kgf*cm, ft.*lbf) : Specified torque

P

B115026E04

IR

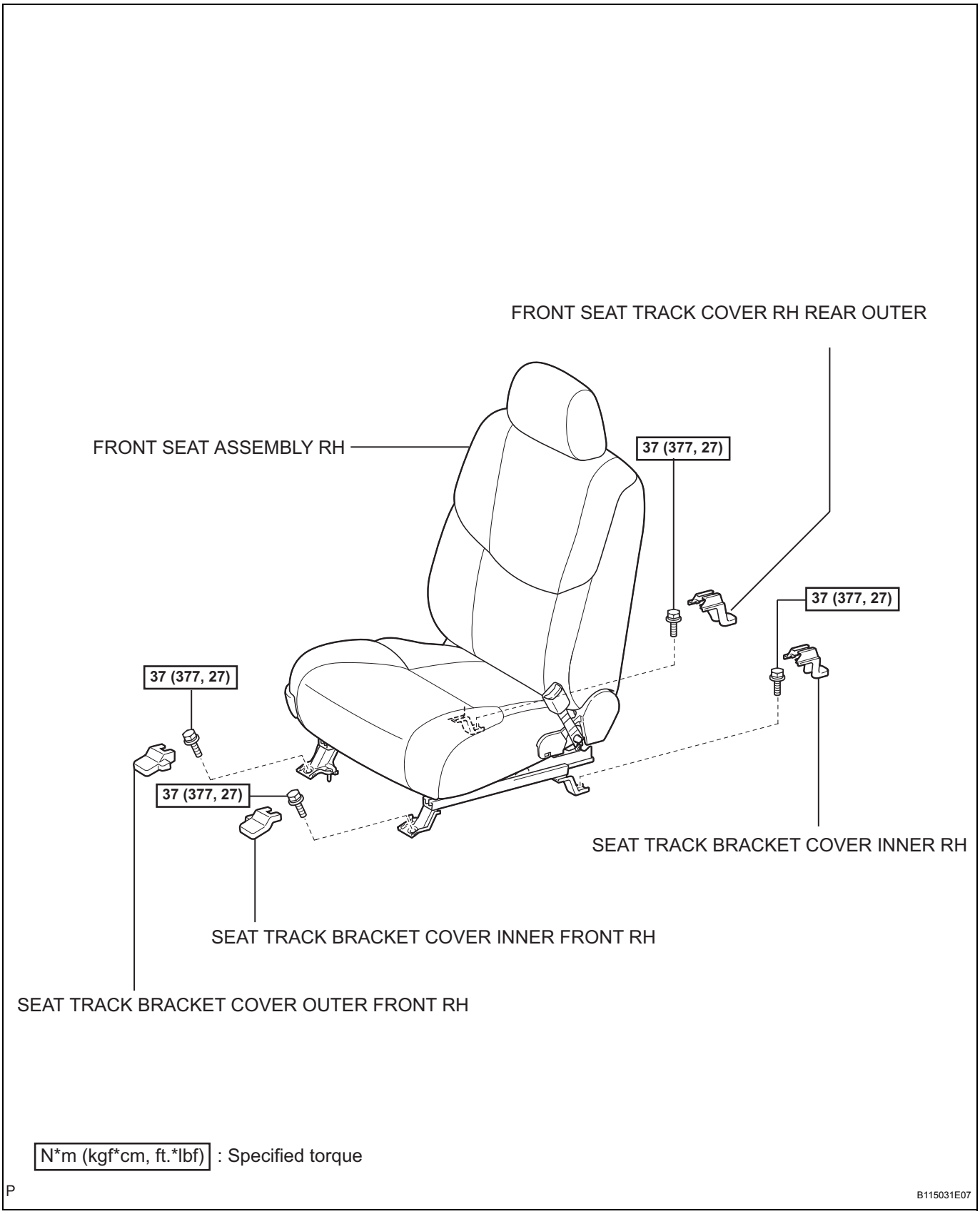
FRONT SEAT TRACK COVER RH REAR OUTER
FRONT SEAT ASSEMBLY RH
37 (377, 27)
37 (377, 27)
37 (377, 27)
37 (377, 27)
SEAT TRACK BRACKET COVER INNER RH
SEAT TRACK BRACKET COVER INNER FRONT RH
SEAT TRACK BRACKET COVER OUTER FRONT RH
N*m (kgf*cm, ft.*lbf) : Specified torque
P
B115031E07

IR

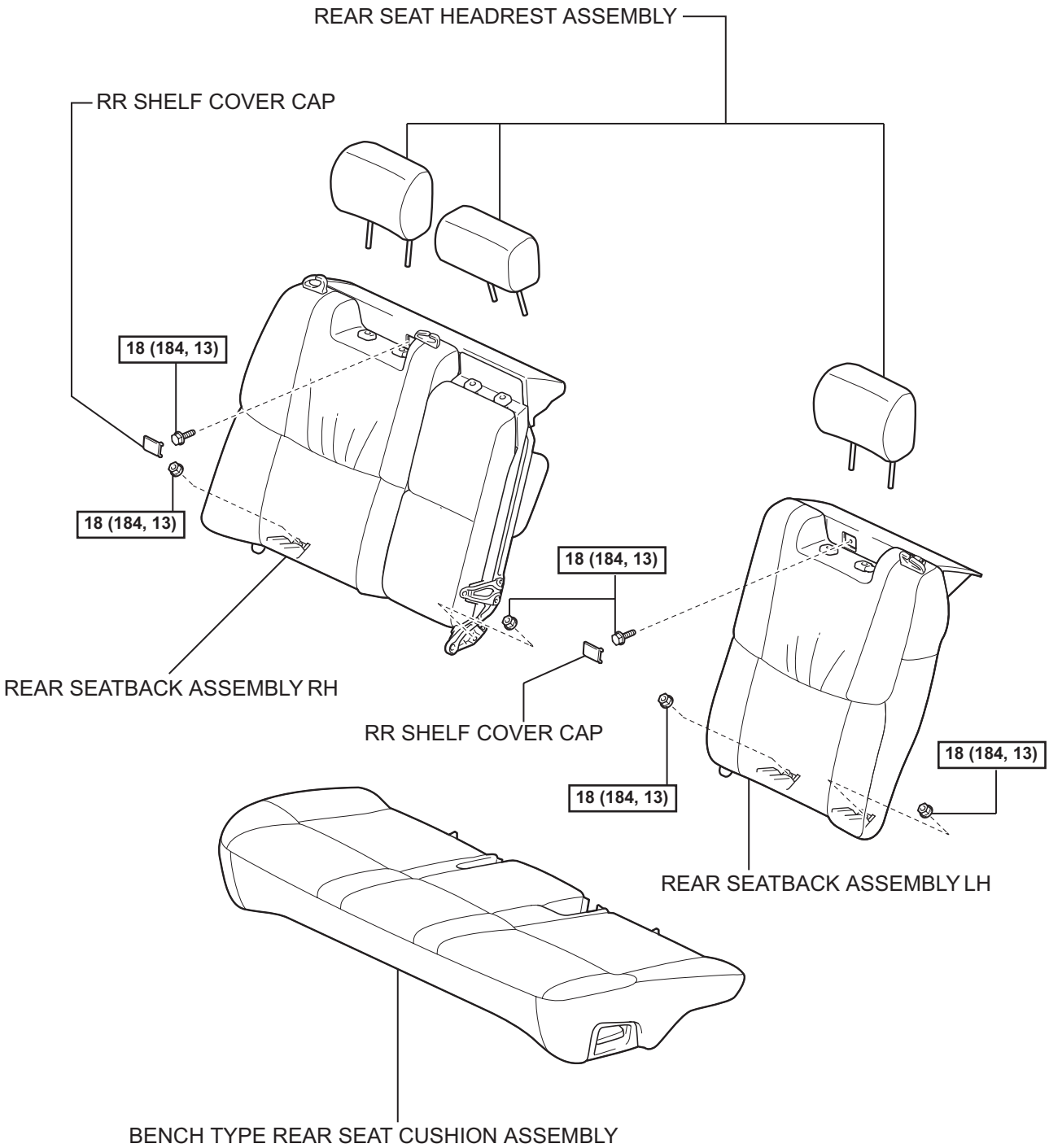

N*m (kgf*cm, ft.*lbf) : Specified torque

P

B115034E14

IR

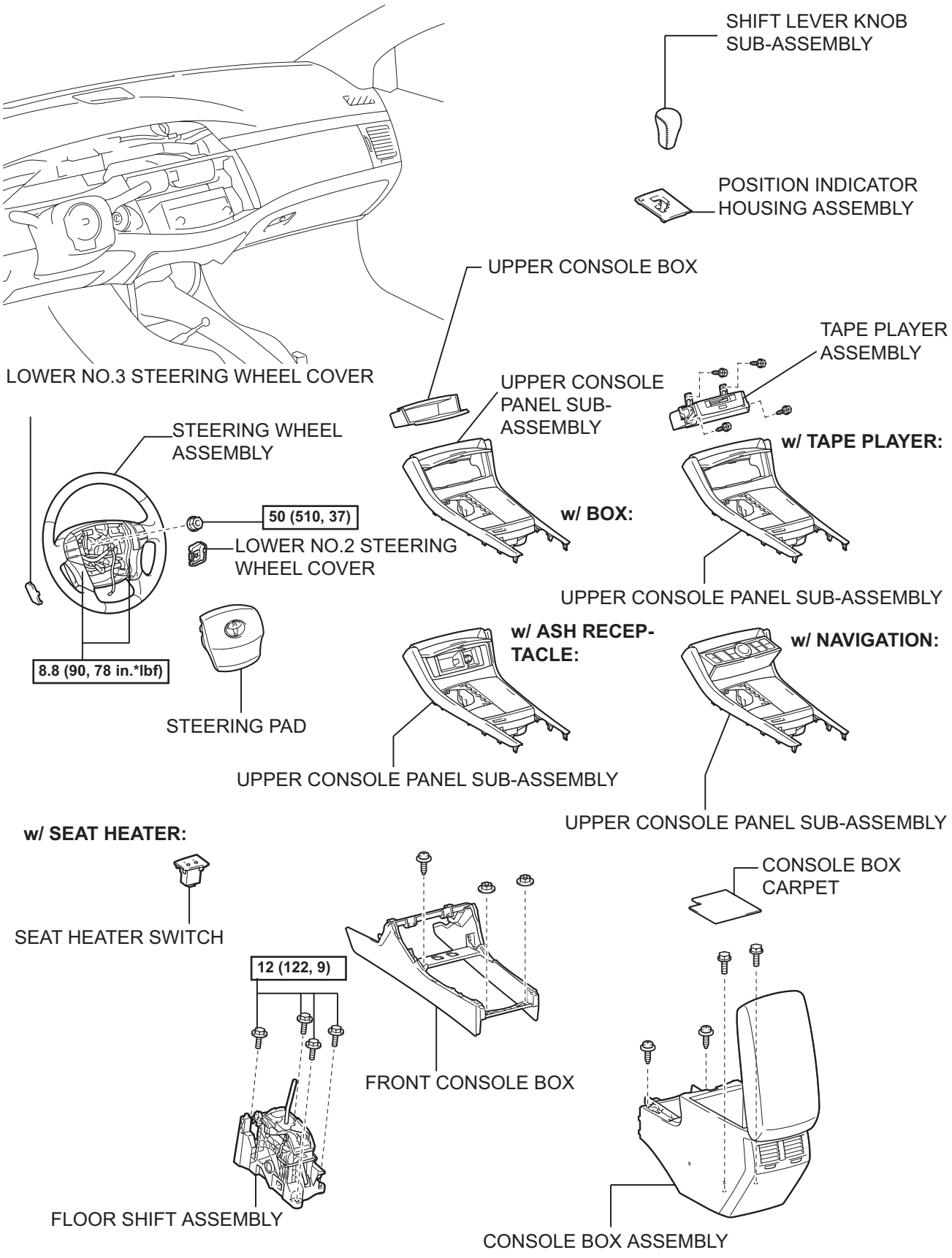

N*m (kgf*cm, ft.*lbf) : Specified torque

P

B115044E04

IR

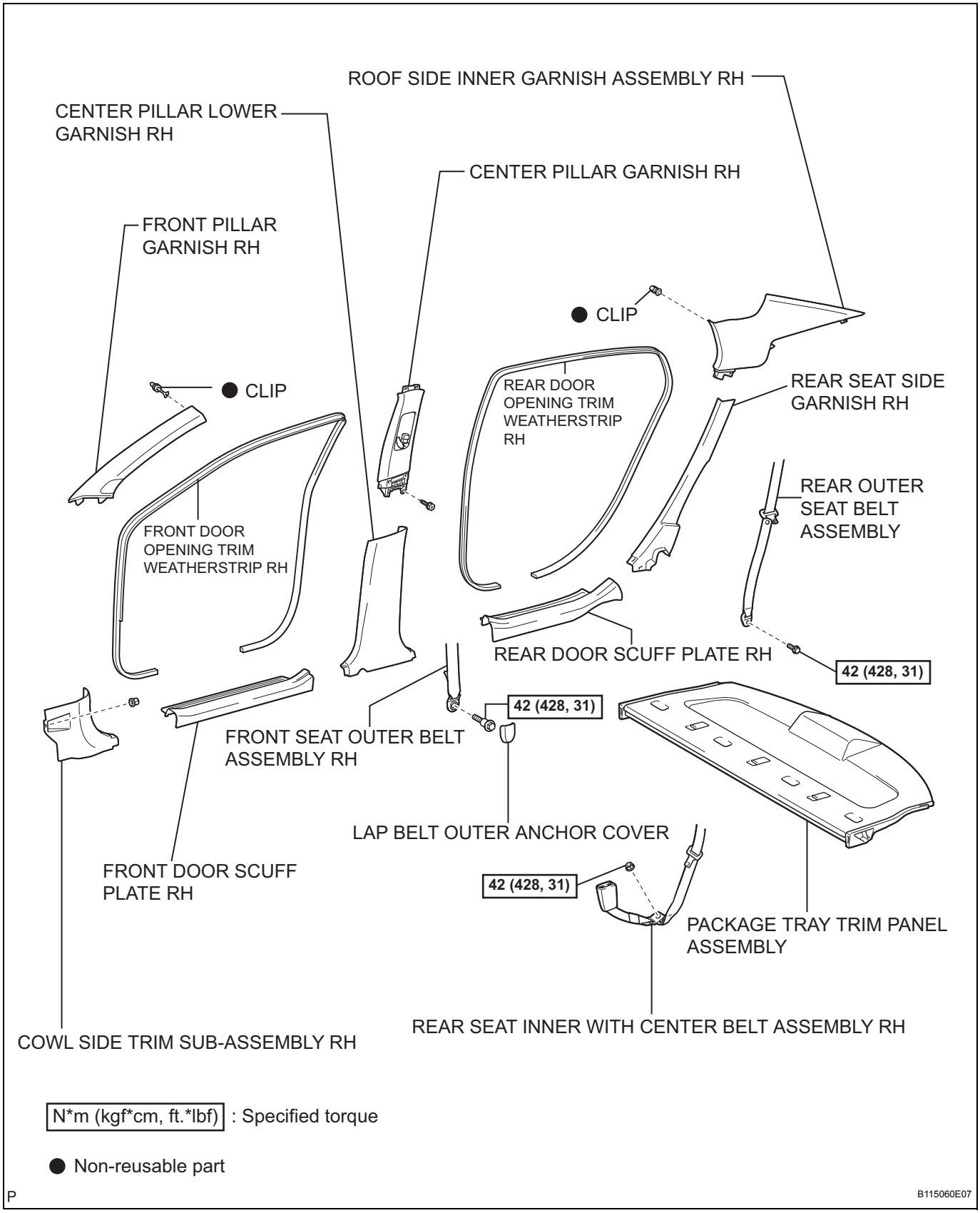
ROOF SIDE INNER GARNISH ASSEMBLY RH
CENTER PILLAR LOWER GARNISH RH
CENTER PILLAR GARNISH RH
FRONT PILLAR GARNISH RH
● CLIP
● CLIP
REAR DOOR OPENING TRIM WEATHERSTRIP RH
REAR SEAT SIDE GARNISH RH
REAR OUTER SEAT BELT ASSEMBLY
FRONT DOOR OPENING TRIM WEATHERSTRIP RH
REAR DOOR SCUFF PLATE RH
42 (428, 31)
42 (428, 31)
FRONT SEAT OUTER BELT ASSEMBLY RH
LAP BELT OUTER ANCHOR COVER
FRONT DOOR SCUFF PLATE RH
42 (428, 31)
PACKAGE TRAY TRIM PANEL ASSEMBLY
COWL SIDE TRIM SUB-ASSEMBLY RH
REAR SEAT INNER WITH CENTER BELT ASSEMBLY RH
N*m (kgf*cm, ft.*lbf) : Specified torque
● Non-reusable part
P
B115060E07

IR

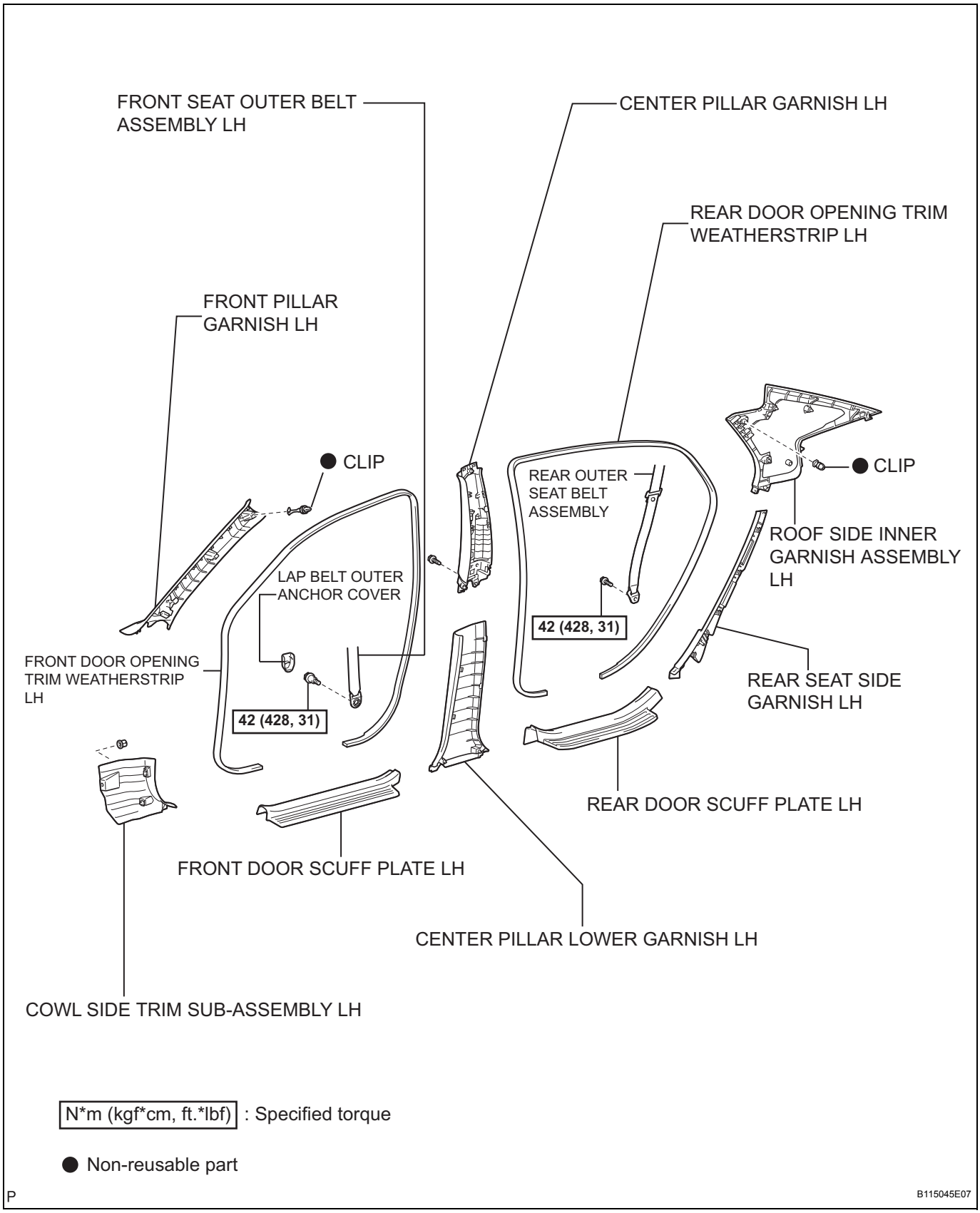

N*m (kgf*cm, ft.*lbf) : Specified torque

● Non-reusable part

P

B115045E07

IR

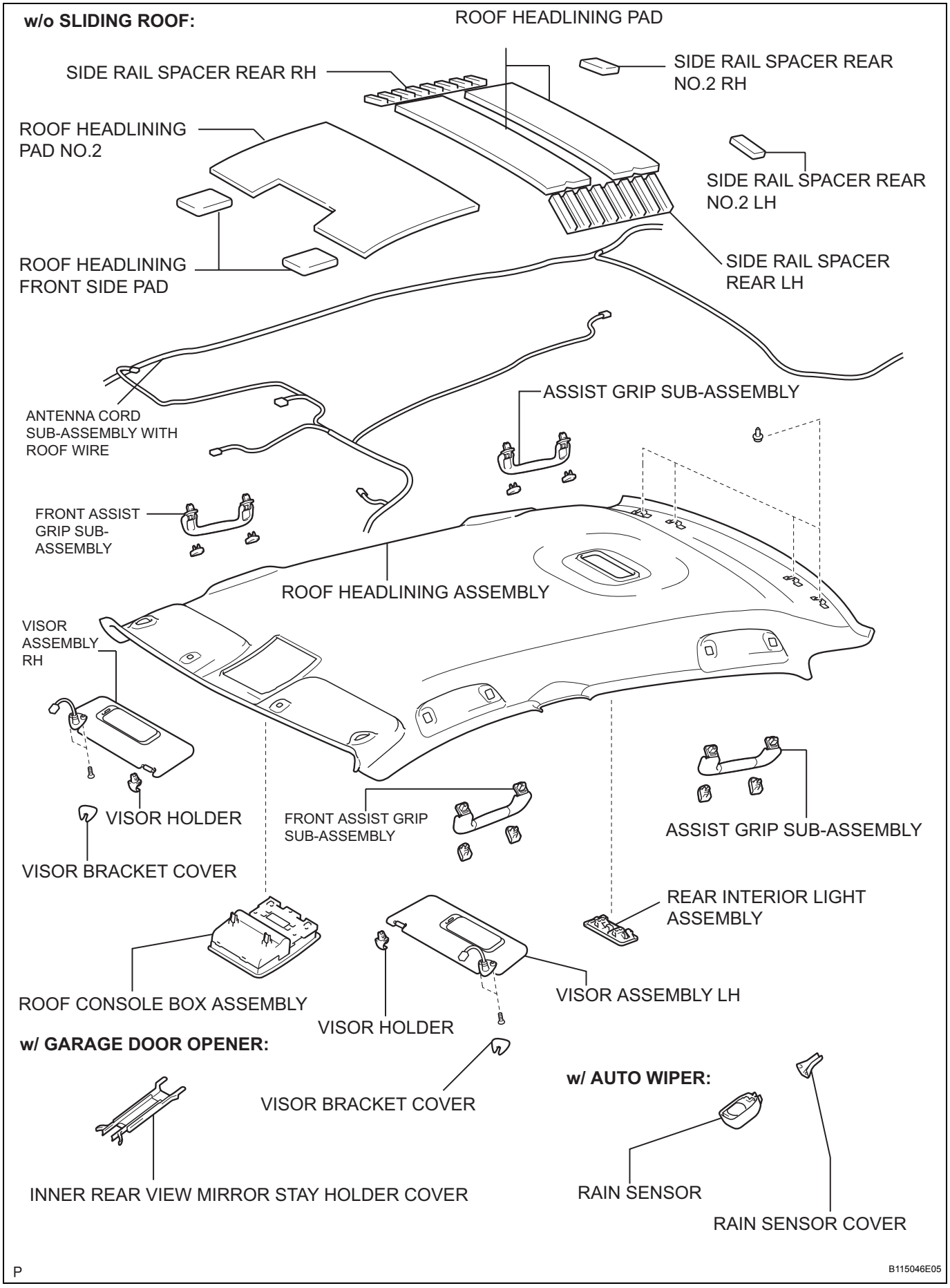
w/o SLIDING ROOF:
ROOF HEADLINING PAD
SIDE RAIL SPACER REAR RH
SIDE RAIL SPACER REAR NO.2 RH
ROOF HEADLINING PAD NO.2
SIDE RAIL SPACER REAR NO.2 LH
ROOF HEADLINING FRONT SIDE PAD
SIDE RAIL SPACER REAR LH
ANTENNA CORD SUB-ASSEMBLY WITH ROOF WIRE
ASSIST GRIP SUB-ASSEMBLY
FRONT ASSIST GRIP SUB-ASSEMBLY
ROOF HEADLINING ASSEMBLY
VISOR ASSEMBLY RH
VISOR HOLDER
VISOR BRACKET COVER
FRONT ASSIST GRIP SUB-ASSEMBLY
ASSIST GRIP SUB-ASSEMBLY
REAR INTERIOR LIGHT ASSEMBLY
ROOF CONSOLE BOX ASSEMBLY
VISOR HOLDER
VISOR ASSEMBLY LH
w/ GARAGE DOOR OPENER:
VISOR BRACKET COVER
w/ AUTO WIPER:
INNER REAR VIEW MIRROR STAY HOLDER COVER
RAIN SENSOR
RAIN SENSOR COVER
P
B115046E05

IR

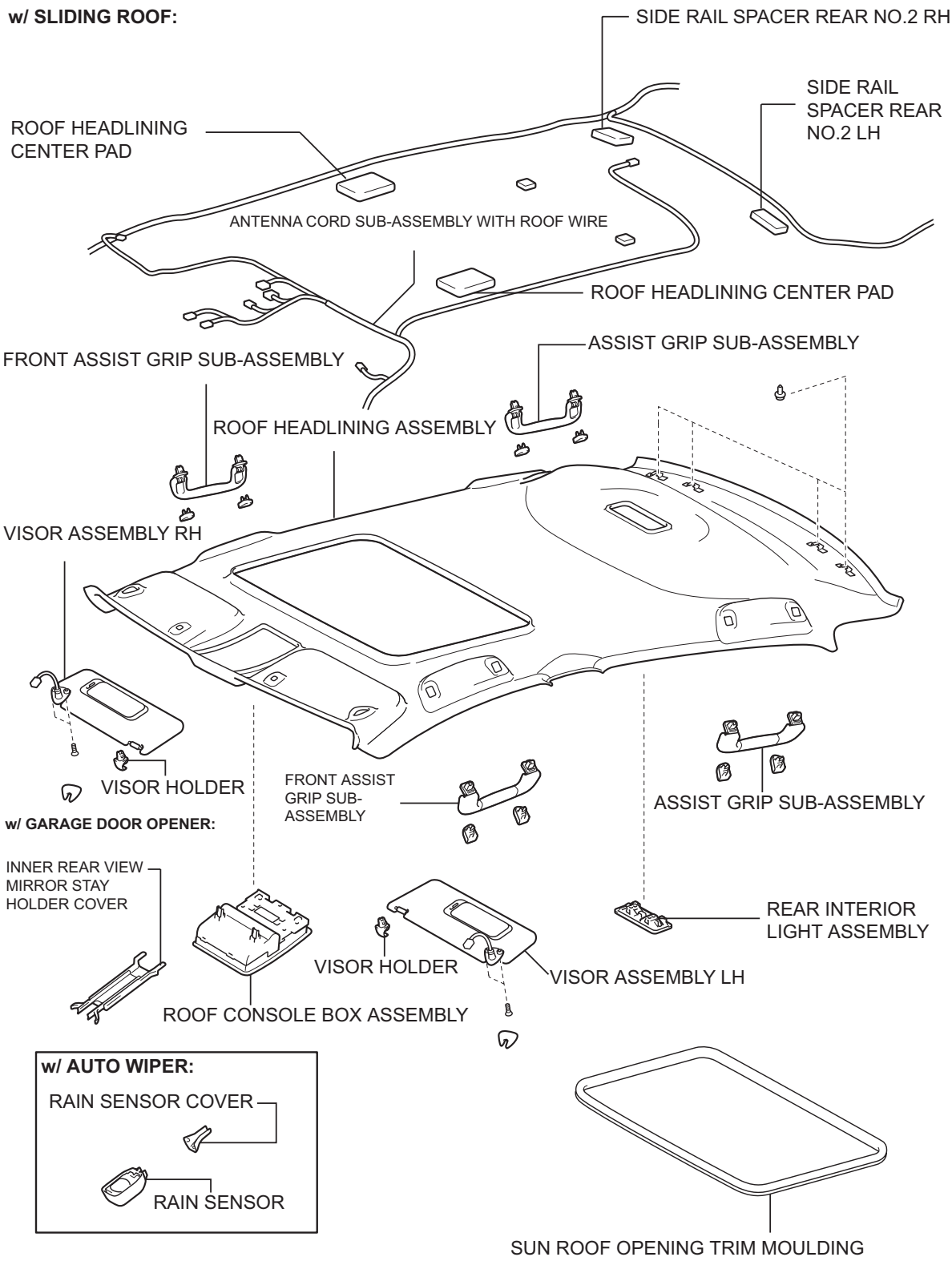
w/ SLIDING ROOF:
SIDE RAIL SPACER REAR NO.2 RH
SIDE RAIL SPACER REAR NO.2 LH
ROOF HEADLINING CENTER PAD
ANTENNA CORD SUB-ASSEMBLY WITH ROOF WIRE
ROOF HEADLINING CENTER PAD
FRONT ASSIST GRIP SUB-ASSEMBLY
ASSIST GRIP SUB-ASSEMBLY
ROOF HEADLINING ASSEMBLY
VISOR ASSEMBLY RH
VISOR HOLDER
FRONT ASSIST GRIP SUB-ASSEMBLY
ASSIST GRIP SUB-ASSEMBLY
w/ GARAGE DOOR OPENER:
INNER REAR VIEW MIRROR STAY HOLDER COVER
REAR INTERIOR LIGHT ASSEMBLY
VISOR HOLDER
VISOR ASSEMBLY LH
ROOF CONSOLE BOX ASSEMBLY
w/ AUTO WIPER:
RAIN SENSOR COVER
RAIN SENSOR
SUN ROOF OPENING TRIM MOULDING
P
B115047E06

IR

REMOVAL

1. **DISCONNECT CABLE FROM NEGATIVE BATTERY TERMINAL**
   (a) Wait for 90 seconds after disconnecting the cable to prevent the airbag working.
2. **REMOVE FRONT SEAT ASSEMBLY LH**
   HINT:
   See page SE-50
3. **REMOVE FRONT SEAT ASSEMBLY RH**
   HINT:
   See page SE-40
4. **REMOVE BENCH TYPE REAR SEAT CUSHION ASSEMBLY (See page SE-68)**
5. **REMOVE REAR SEATBACK ASSEMBLY**
   HINT:
   See page SE-68
6. **REMOVE LOWER NO.2 STEERING WHEEL COVER (See page RS-304)**
7. **REMOVE LOWER NO.3 STEERING WHEEL COVER (See page RS-304)**
8. **REMOVE STEERING PAD (See page RS-304)**
9. **REMOVE STEERING WHEEL ASSEMBLY (See page SR-36)**
10. **REMOVE SHIFT LEVER KNOB SUB-ASSEMBLY (See page IP-12)**
11. **REMOVE POSITION INDICATOR HOUSING ASSEMBLY (See page IP-12)**
12. **REMOVE SEAT HEATER SWITCH (w/ Seat Heater) (See page IP-12)**
13. **REMOVE UPPER CONSOLE PANEL SUB-ASSEMBLY (See page IP-13)**
14. **REMOVE CONSOLE BOX CARPET**
15. **REMOVE CONSOLE BOX ASSEMBLY (See page IP-13)**
16. **REMOVE FRONT CONSOLE BOX (See page IP-14)**
17. **REMOVE FLOOR SHIFT ASSEMBLY (See page AX-167)**

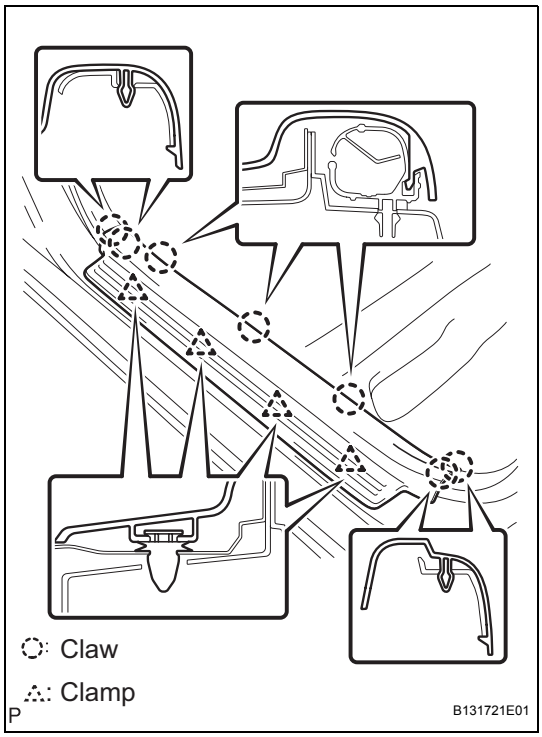

18. REMOVE FRONT DOOR SCUFF PLATE LH

(a) Disengage the 4 clips and 7 claws and remove the front door scuff plate LH.

19. REMOVE FRONT DOOR SCUFF PLATE RH

HINT:

Removal of the front door scuff plate RH is the same as the front door scuff plate LH.

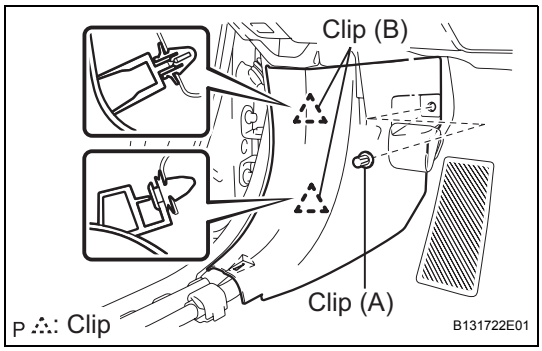

20. REMOVE COWL SIDE TRIM SUB-ASSEMBLY LH

(a) Remove the clip (A).

(b) Disengage the 2 clips (B) and remove the cowl side trim sub-assembly LH.

21. REMOVE COWL SIDE TRIM SUB-ASSEMBLY RH

HINT:

Removal of the cowl side trim sub-assembly RH is the same as the cowl side trim sub-assembly LH.

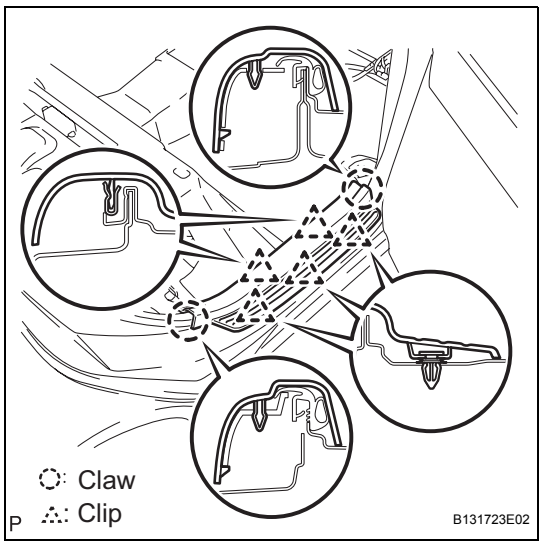

22. REMOVE REAR DOOR SCUFF PLATE LH

(a) Disengage the 5 clips and 2 claws and remove the rear door scuff plate LH.

23. REMOVE REAR DOOR SCUFF PLATE RH

HINT:

Removal of the rear door scuff plate RH is the same as the rear door scuff plate LH.

24. REMOVE FRONT DOOR OPENING TRIM WEATHERSTRIP LH

25. REMOVE FRONT DOOR OPENING TRIM WEATHERSTRIP RH

26. REMOVE REAR DOOR OPENING TRIM WEATHERSTRIP LH

27. REMOVE REAR DOOR OPENING TRIM WEATHERSTRIP RH

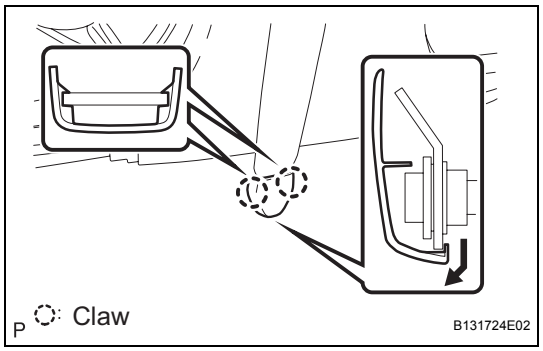

28. REMOVE LAP BELT OUTER ANCHOR COVER

(a) Disengage the 2 claws and remove the lap belt outer anchor cover.

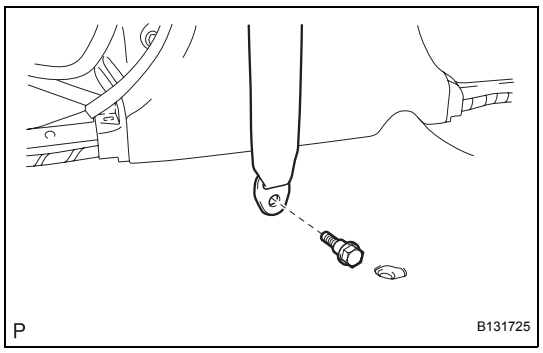

29. SEPARATE FRONT SEAT OUTER BELT ASSEMBLY LH

(a) Remove the bolt.

30. SEPARATE FRONT SEAT OUTER BELT ASSEMBLY RH

HINT:

Removal of the front seat outer belt assembly RH is the same as the front seat outer belt assembly LH.

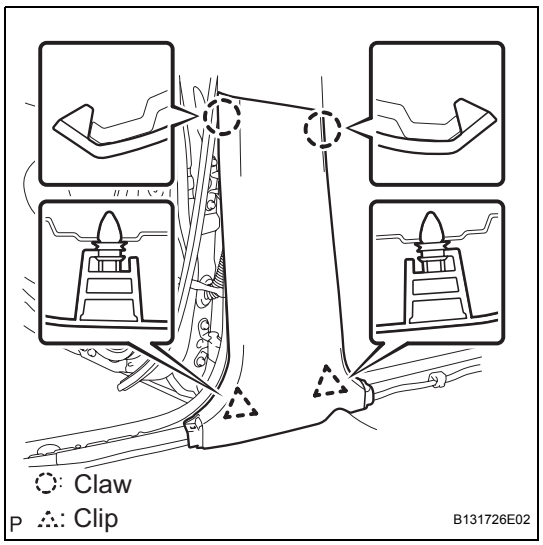

31. REMOVE CENTER PILLAR LOWER GARNISH LH

(a) Disengage the 2 clips and 2 claws and remove the center pillar lower garnish LH.

32. REMOVE CENTER PILLAR LOWER GARNISH RH

HINT:

Removal of the center pillar lower garnish RH is the same as the center pillar lower garnish LH.

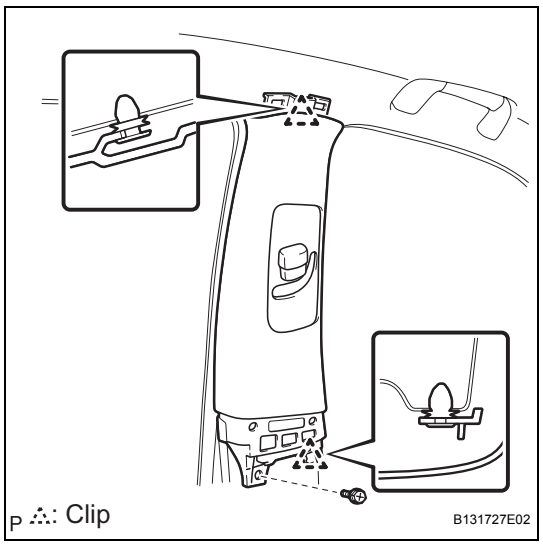

33. REMOVE CENTER PILLAR GARNISH LH

(a) Remove the bolt.

(b) Disengage the 2 clips and remove the center pillar garnish LH.

34. REMOVE CENTER PILLAR GARNISH RH

HINT:

Removal of the center pillar garnish RH is the same as the center pillar garnish LH.

IR

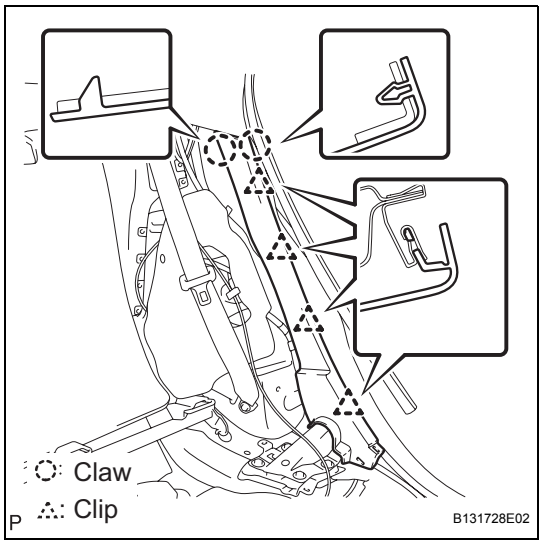

35. REMOVE REAR SEAT SIDE GARNISH LH

(a) Disengage the 4 clips and 2 claws and remove the rear seat side garnish LH.

36. REMOVE REAR SEAT SIDE GARNISH RH

HINT:

Removal of the rear seat side garnish RH is the same as the rear seat side garnish LH.

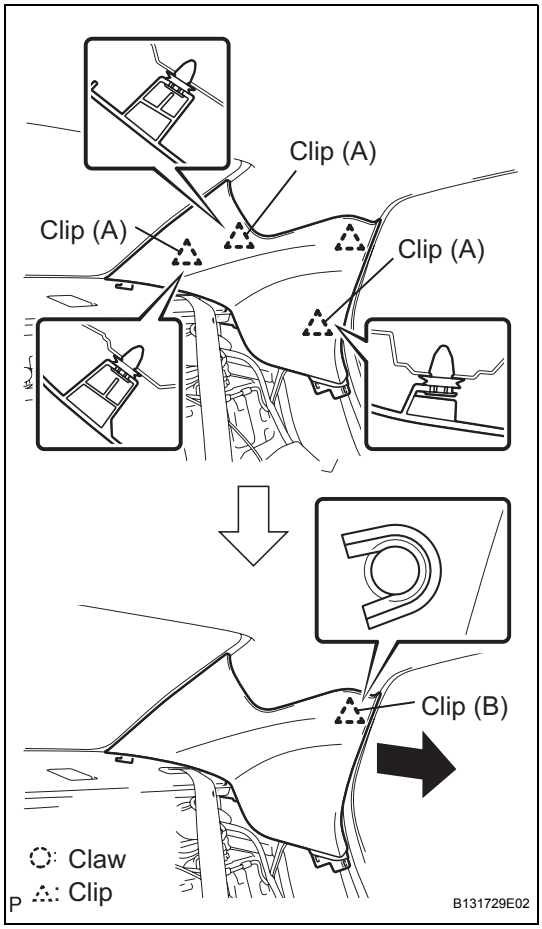

37. REMOVE ROOF SIDE INNER GARNISH ASSEMBLY LH

(a) Disengage the 3 clips (A).

(b) Pull the roof side inner garnish assembly LH forward, disengaging from the metal clip (B).

(c) Remove the metal clip (B) from the body.

38. REMOVE ROOF SIDE INNER GARNISH ASSEMBLY RH

HINT:

Removal of the roof side inner garnish assembly RH is the same as the roof side inner garnish assembly LH.

39. SEPARATE REAR OUTER SEAT BELT ASSEMBLY (See page SB-25)

40. SEPARATE REAR SEAT INNER WITH CENTER BELT ASSEMBLY RH (See page SB-33)

41. SEPARATE REAR OUTER SEAT BELT ASSEMBLY (See page SB-25)

42. REMOVE PACKAGE TRAY TRIM PANEL ASSEMBLY (See page SB-31)

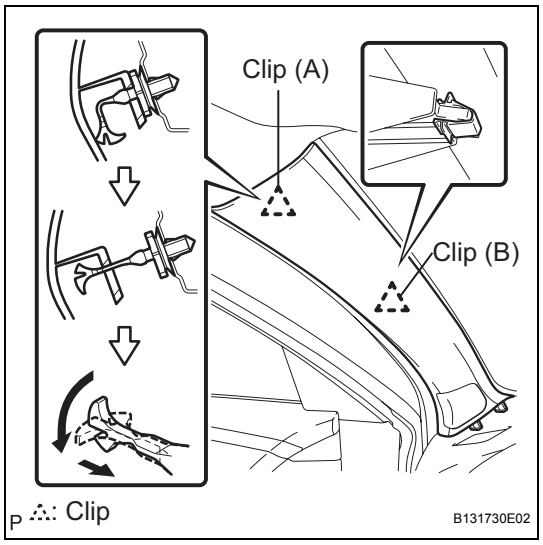

43. REMOVE FRONT PILLAR GARNISH LH

(a) Pull the upper of the garnish towards the inside of the cabin and disengage clips (A) and (B).

(b) Turn clip (A) 90 degrees with needle-nosed pliers as shown in the illustration and remove it from the front pillar garnish RH.
HINT:
If clip A cannot be disengaged easily, cut it off with nippers, etc.

(c) Remove clip (A) from the front pillar.

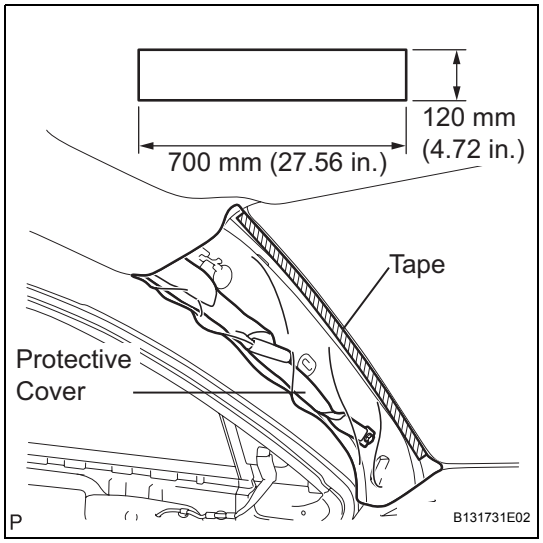

(d) Protect the curtain shield airbag.
NOTICE:
Cover the curtain shield airbag with the protection cover as soon as the front pillar garnish is removed.

(1) Cover the airbag with cloth or nylon of 700 mm (27.56 in.) x 120 mm (4.72 in.) and fix the ends of the cover with tape, as shown in the illustration.

44. REMOVE FRONT PILLAR GARNISH RH
HINT:
Removal of the front pillar garnish RH is the same as the front pillar garnish LH.

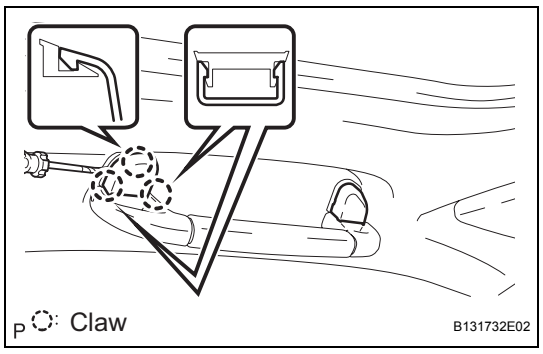

45. REMOVE FRONT ASSIST GRIP SUB-ASSEMBLY

(a) Disengage the 3 claws and remove the cover.
HINT:
Tape the screwdriver tip before use.

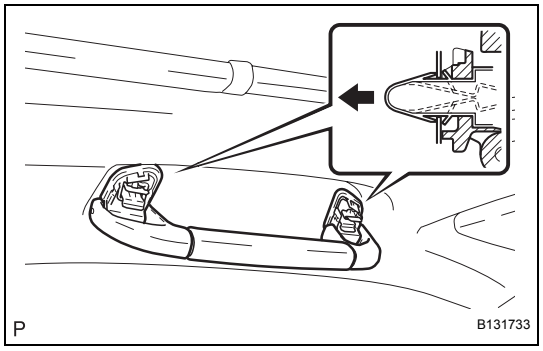

(b) Slightly push in the clips with your fingers and remove them from the assist grip sub-assembly.

(c) Remove the clips from the body.

46. REMOVE ASSIST GRIP SUB-ASSEMBLY
HINT:
Removal of the assist grip sub-assembly is the same as the assist grip sub-assembly front.

IR

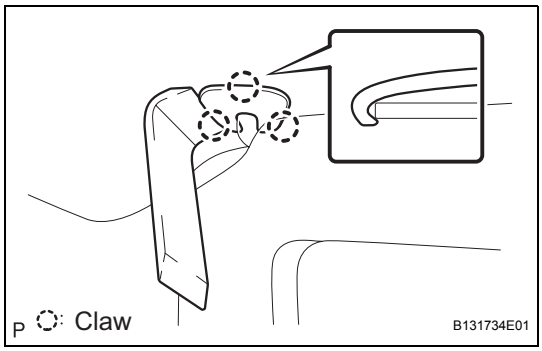

47. REMOVE VISOR BRACKET COVER

(a) Using a moulding remover, disengage the 3 claws and remove the visor bracket cover.

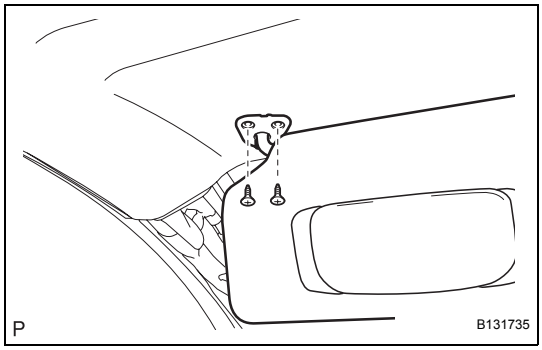

48. REMOVE VISOR ASSEMBLY LH

(a) Remove the 2 screws and the LH visor assembly.

49. REMOVE VISOR ASSEMBLY RH

HINT:

Removal of the RH visor assembly is the same as the LH visor assembly.

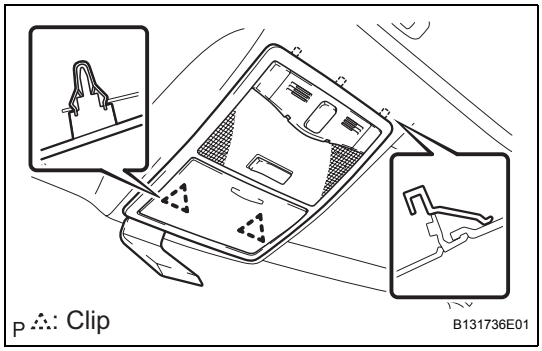

50. REMOVE ROOF CONSOLE BOX ASSEMBLY

(a) Using a moulding remover, disengage the 2 clips and remove the roof console box assembly.

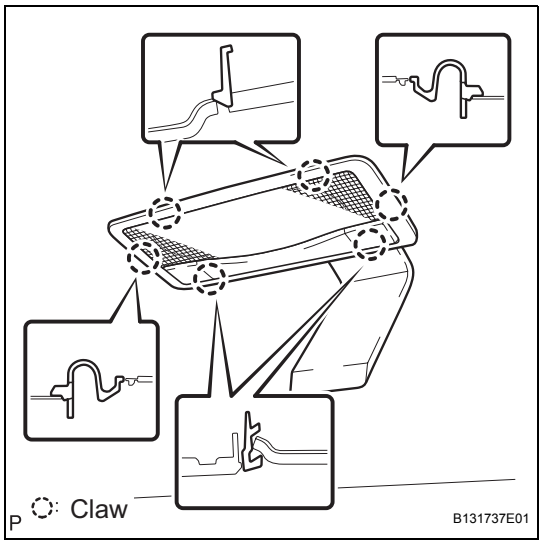

51. REMOVE REAR INTERIOR LIGHT ASSEMBLY

(a) Using a moulding remover, disengage the 6 claws and remove the rear interior light assembly.

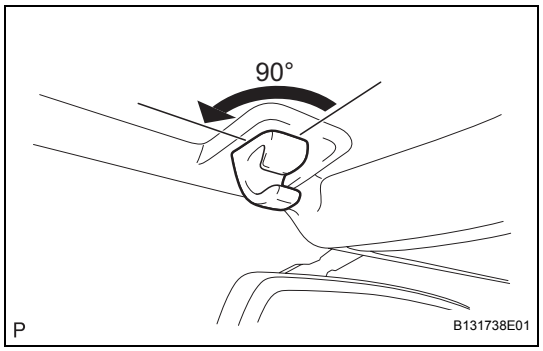

52. REMOVE VISOR HOLDER

(a) Remove the holder of the sun visor by turning it to the left.

53. REMOVE INNER REAR VIEW MIRROR STAY HOLDER COVER (W/ Garage Door Opener) (See page MI-35)

54. REMOVE RAIN SENSOR COVER (w/ Auto Wiper) (See page WW-52)

55. REMOVE RAIN SENSOR (w/ Auot Wiper) (See page WW-52)

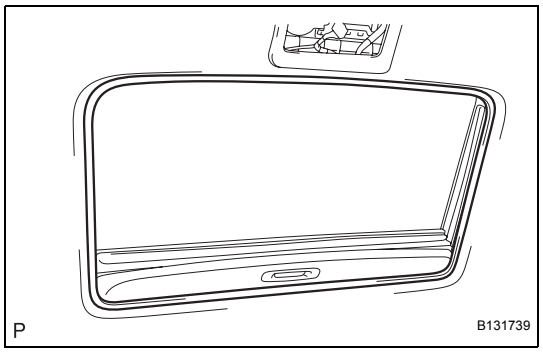

56. REMOVE SUN ROOF OPENING TRIM MOULDING (w/ Sliding Roof)

(a) Remove the sun roof opening trim moulding.

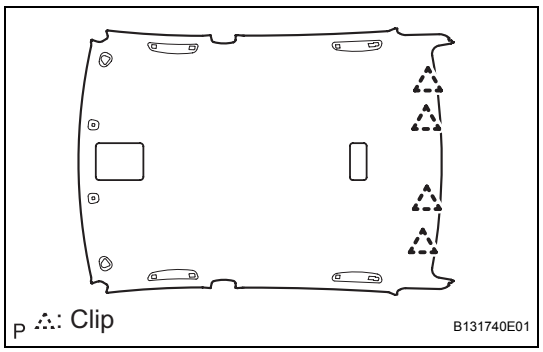

57. REMOVE ROOF HEADLINING ASSEMBLY

(a) Disengage the 4 clips.

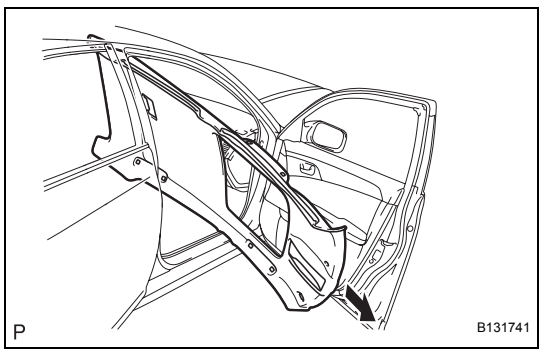

(b) Remove the roof headlining assembly from the passenger's door.

IR

(c) Remove the pad from the roof headlining assembly.

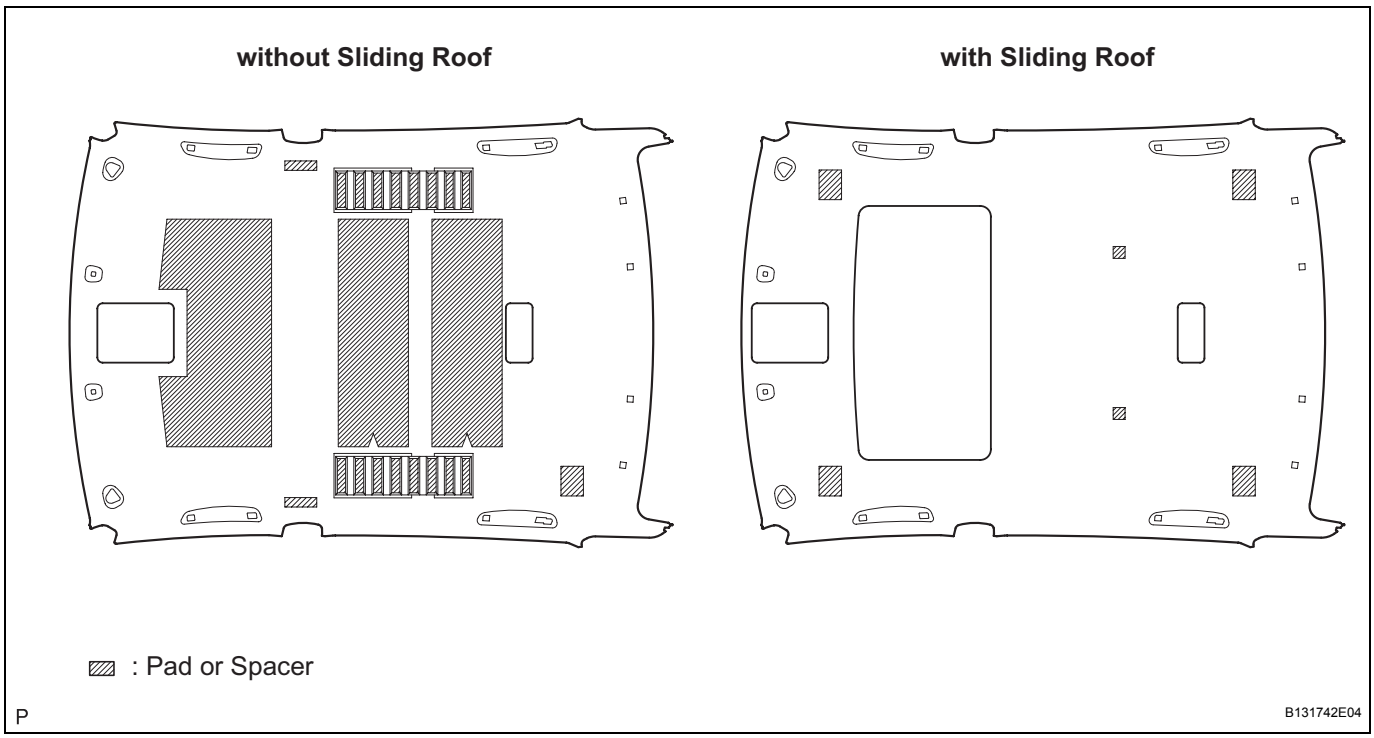

(d) Remove the antenna cord sub-assembly with roof wire.

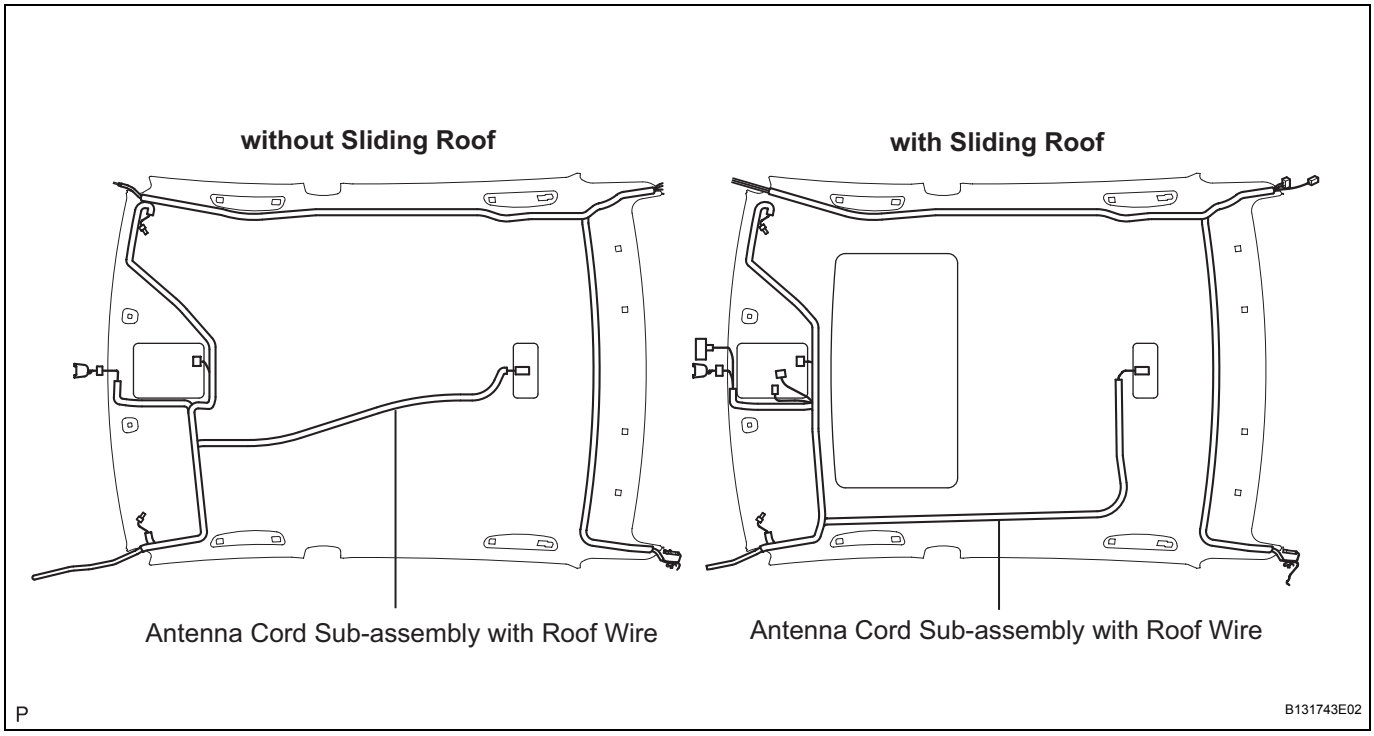

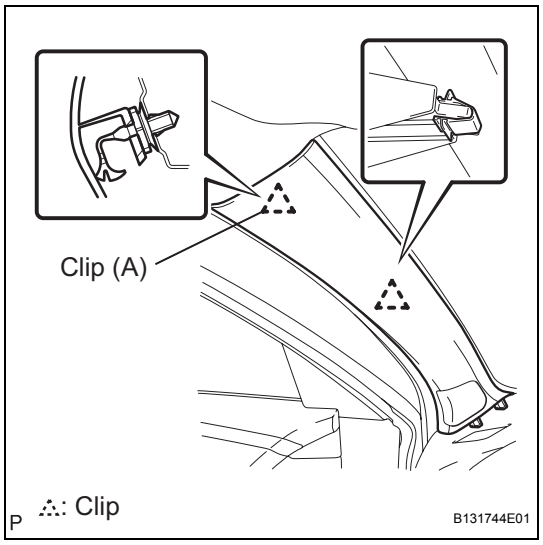

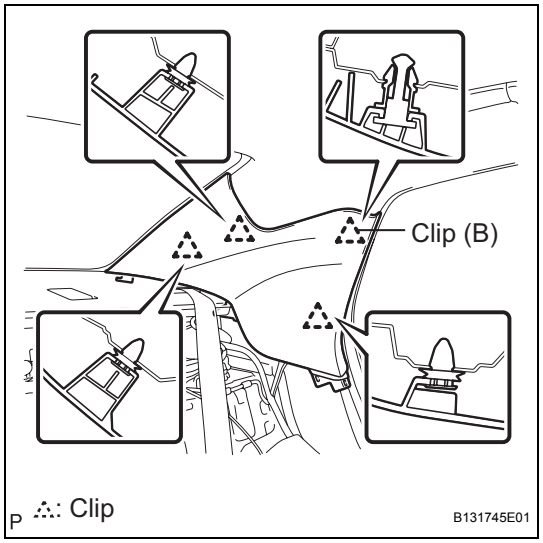

INSTALLATION

1. **INSTALL FRONT PILLAR GARNISH LH**
   (a) Install the new clip (A).
   (b) Engage the 2 clips to install the front pillar garnish LH.
2. **INSTALL FRONT PILLAR GARNISH RH**
   HINT:
   Installation of the front pillar garnish RH is the same as the front pillar garnish LH.
3. **INSTALL REAR OUTER SEAT BELT ASSEMBLY (See page SB-25)**
4. **INSTALL REAR SEAT INNER WITH CENTER BELT ASSEMBLY RH (See page SB-33)**
5. **INSTALL REAR OUTER SEAT BELT ASSEMBLY (See page SB-25)**
6. **INSTALL ROOF SIDE GARNISH ASSEMBLY INNER LH**
   (a) Install the new metal clip (B).
   (b) Engage the 4 clips to install the roof side garnish assembly inner LH.
7. **INSTALL ROOF SIDE GARNISH ASSEMBLY INNER RH**
   HINT:
   Installation of the roof side garnish assembly inner RH is the same as the roof side garnish assembly inner LH.
8. **CENTER SPIRAL CABLE (See page RS-316)**
9. **INSTALL STEERING WHEEL ASSEMBLY (See page SR-46)**
10. **INSTALL HORN BUTTON ASSEMBLY (See page RS-305)**
11. **INSTALL FRONT SEAT OUTER BELT ASSEMBLY RH**
    (a) Install the front seat outer belt assembly RH with the bolt.
    Torque: 42 N*m (428 kgf*cm, 31 ft.*lbf)
12. **INSTALL FRONT SEAT OUTER BELT ASSEMBLY LH**
    (a) Install the front seat outer belt assembly LH with the bolt.
    Torque: 42 N*m (428 kgf*cm, 31 ft.*lbf)
13. **INSTALL REAR SEATBACK ASSEMBLY**
    SE-76
14. **INSTALL FRONT SEAT ASSEMBLY RH (See page SE-42)**
15. **INSTALL FRONT SEAT ASSEMBLY LH (See page SE-63)**
16. **CONNECT CABLE FROM NEGATIVE BATTERY TERMINAL**

17. PERFORM INITIALIZATION

(a) Some systems need initialization when disconnecting the cable from the negative battery terminal.
HINT:
See page IN-29

18. INSPECT STEERING PAD

HINT:
See page RS-303

19. INSPECT SRS WARNING LIGHT

HINT:
See page RS-28

HOW TO USE THIS MANUAL

GENERAL INFORMATION

1. GENERAL DESCRIPTION

(a) This manual is written in accordance with SAE J2008.
  (1) Diagnosis
  (2) Removing/Installing, Replacing, Disassembling/ Reassembling, Checking and Adjusting
  (3) Final Inspection

(b) This manual explains (1) (see "Diagnostics" section) and (2). (3) is omitted.

(c) The following procedures are omitted from this manual. However, these procedures are essential and must be performed when applicable.
  (1) Use a jack or lift to perform operations
  (2) Cleaning removed parts
  (3) Performing a visual check

2. INDEX

(a) An alphabetical INDEX section is provided at the end of the book as a reference to help you find the item to be repaired.

3. PREPARATION

(a) Use of Special Service Tools (SST) and Special Service Materials (SSM) may be required, depending on the repair procedure. Be sure to use SST and SSM when they are required and follow the working procedure properly. A list of SST and SSM is in the "Preparation" section of this manual.

4. REPAIR PROCEDURES

(a) A component illustration is placed under the title where necessary.

(b) Non-reusable parts, grease application areas, precoated parts and torque specifications are noted in the component illustrations.

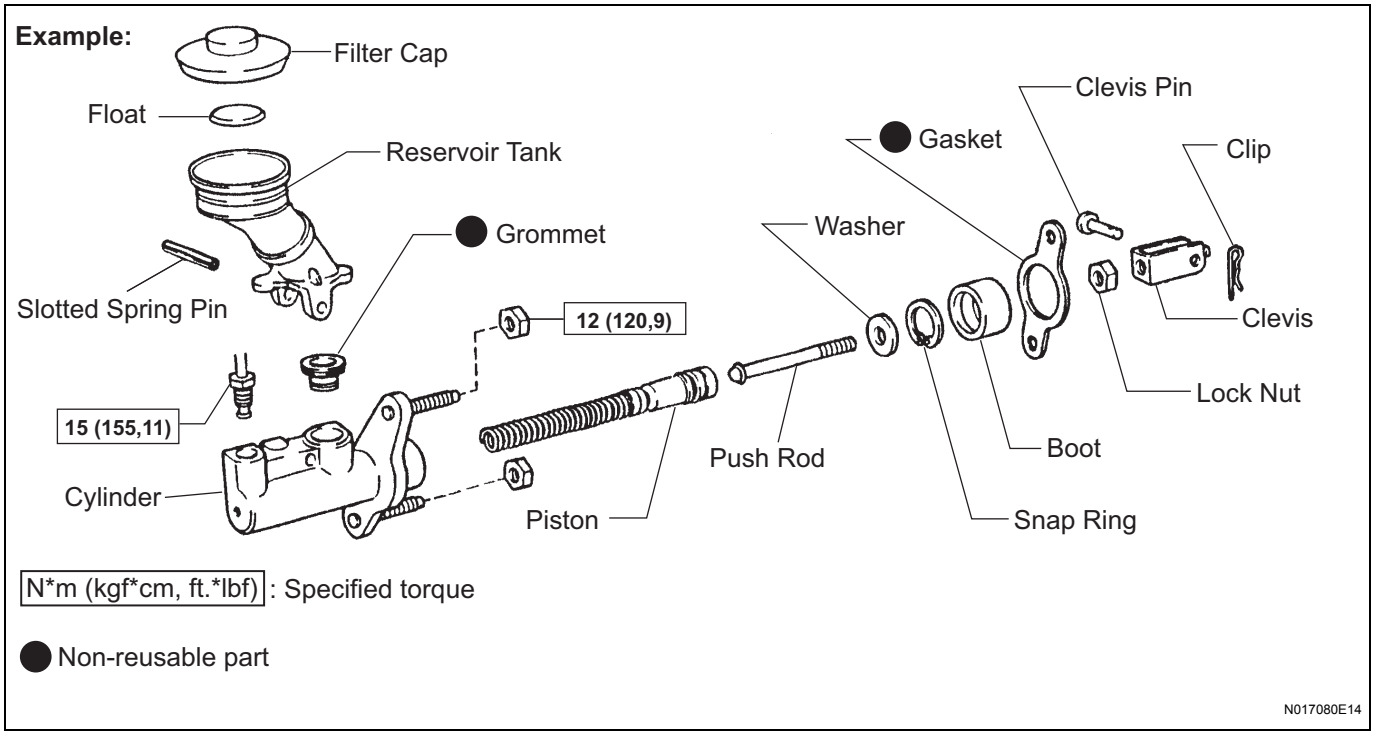

(c) Torque specifications, grease application areas and non-reusable parts are emphasized in the procedures.
NOTICE:
There are cases where such information can only be explained by using an illustration. In these cases, all the information such as torque, oil, etc. are described in the illustration.

(d) Only items with key points are described in the text. What to do and other details are placed in illustrations next to the text. Both the text and illustrations are accompanied by standard values and notices.

(e) Illustrations of similar vehicle models are sometimes used. In those cases, specific details may be different from the actual vehicle.

(f) Procedures are presented in a step-by-step format:
(1) The illustration shows what to do and where to do it.
(2) The task heading tells what to do.

(3) The explanation text tells how to perform the task. It also has information such as specifications and warning.

Example:

Illustration:

what to do and where

Task heading: what you will be doing

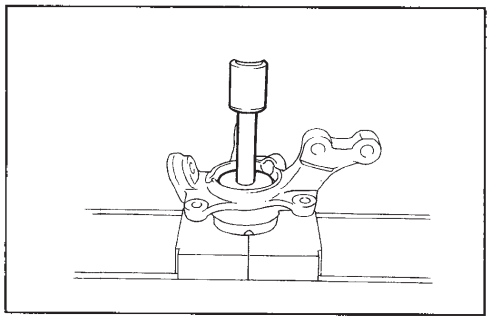

14. INSTALL FRONT AXLE HUB BEARING

(a) Using SST and a press, install a new bearing to the steering knuckle. ← *Detailed text: how to perform task*

SST 09950–60020 (09951–00720), 09950–70010 (09951–07100)

Set part No.

Component part No.

D032545E03

HINT:

This format provides an experienced technician with a FAST TRACK to the necessary information. The task headings are easy to read and the text below the task heading provides detailed information. Important specifications and warnings are always written in bold type.

5. SERVICE SPECIFICATIONS

(a) SPECIFICATIONS are presented in bold-faced text throughout the manual. The specifications are also found in the "Service Specifications" section for quick reference.

6. TERMS DEFINITION

CAUTION	Possibility of injury to you or other people.
NOTICE	Possibility of damage to components being repaired.
HINT	Provides additional information to help you perform repairs.

7. SI UNIT

(a) The units used in this manual comply with the SI UNIT (International System of Units) standard. Units from the metric system and the English systems are also provided.

Example:

Torque: 30 N*m (310 kgf*cm, 22 ft.*lbf)

IDENTIFICATION INFORMATION

VEHICLE IDENTIFICATION AND SERIAL NUMBERS

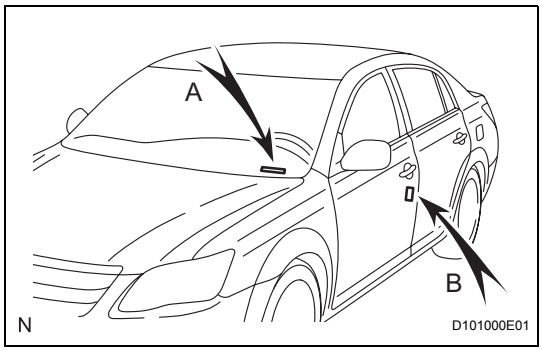

1. VEHICLE IDENTIFICATION NUMBER

(a) The vehicle identification number is stamped on the vehicle identification number plate and certification label, as shown in the illustration.

A:

Vehicle Identification Number Plate

B:

Certification Label

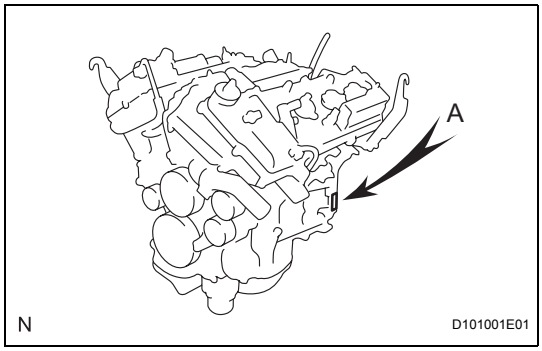

2. ENGINE SERIAL NUMBER AND TRANSMISSION SERIAL NUMBER

(a) The engine serial number is stamped on the cylinder block of the engine.

A:

Engine Serial Number

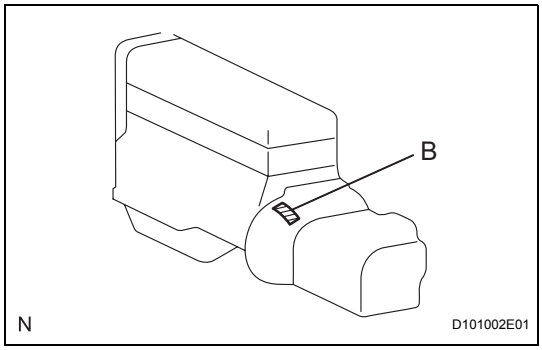

(b) The transmission serial number is stamped on the housing as shown in the illustration.

B:

Transmission Serial Number

REPAIR INSTRUCTION

PRECAUTION

1. BASIC REPAIR HINT

(a) HINTS ON OPERATIONS

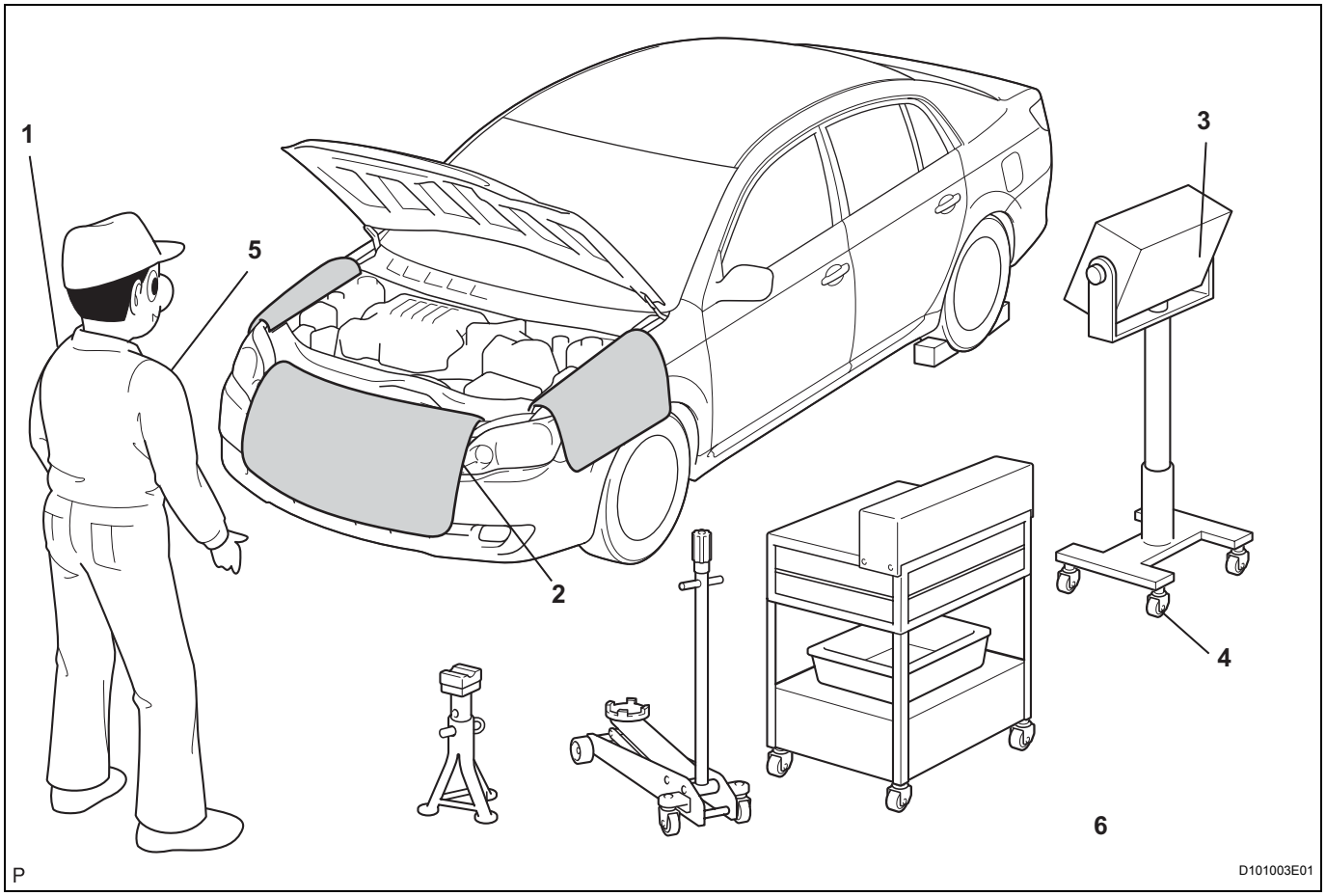

1	Attire	• Always wear a clean uniform. • Hat and safety shoes must be worn.
2	Vehicle protection	Prepare a grille cover, fender cover, seat cover and floor mat before starting the operation.
3	Safe operation	• When working with 2 or more persons, be sure to check safety for one another. • When working with the engine running, make sure to provide ventilation for exhaust fumes in the workshop. • If working on high temperature, high pressure, rotating, moving, or vibrating parts, wear appropriate safety equipment and take extra care not to injure yourself or others. • When jacking up the vehicle, be sure to support the specified location with a safety stand. • When lifting up the vehicle, use appropriate safety equipment.
4	Preparation of tools and measuring gauge	Before starting operation, prepare a tool stand, SST, gauge, oil and parts for replacement.
5	Removal and installation, disassembly and assembly operations	• Diagnose with a thorough understanding of proper procedures and of the reported problem. • Before removing the parts, check the general condition of the assembly and for deformation and damage. • When the assembly is complicated, take notes. For example, note the total number of electrical connections, bolts, or hoses removed. Add matchmarks to insure reassembly of components in the original positions. Temporarily mark hoses and their fittings if needed. • Clean and wash the removed parts if necessary and assemble them after a thorough check.

6	Removed parts	• Place the removed parts in a separate box to avoid mixing them up with the new parts or contaminating the new parts. • For non-reusable parts such as gaskets, O-rings, and self-locking nuts, replace them with new ones as instructed in this manual. • Retain the removed parts for customer inspection, if requested.

IN

(b) JACKING UP AND SUPPORTING VEHICLE
(1) Care must be taken when jacking up and supporting the vehicle. Be sure to lift and support the vehicle at the proper locations.

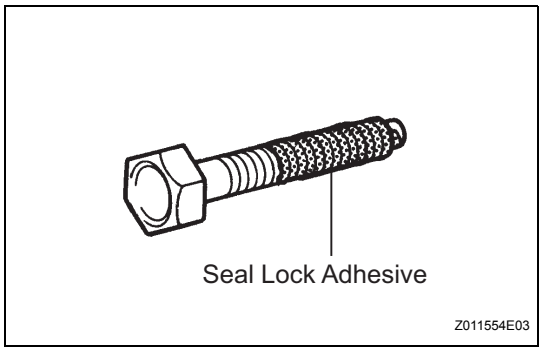

(c) PRECOATED PARTS
(1) Precoated parts are bolts and nuts that are coated with a seal lock adhesive at the factory.
(2) If a precoated part is retightened, loosened or moved in any way, it must be recoated with the specified adhesive.
(3) When reusing a precoated part, clean off the old adhesive and dry the part with compressed air. Then apply new seal lock adhesive appropriate to that part.
(4) Some seal lock agents harden slowly. You may have to wait for the seal lock adhesive to harden.

(d) GASKETS
(1) When necessary, use a sealer on gaskets to prevent leaks.

(e) BOLTS, NUTS AND SCREWS
(1) Carefully follow all the specifications for tightening torques. Always use a torque wrench.
NOTICE:
Perform the torque with the lower limit value of the torque tolerance.

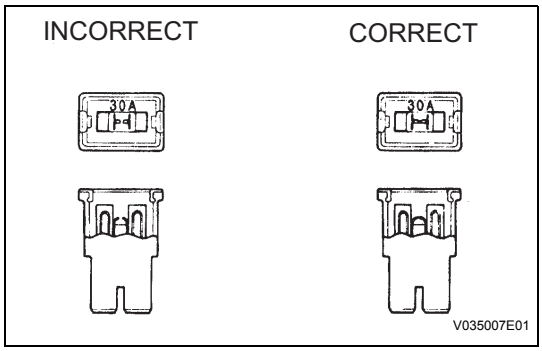

(f) FUSES
(1) When inspecting a fuse, check that the wire of the fuse is not broken.
(2) When replacing fuses, be sure that the new fuse has the correct amperage rating. Do not exceed the rating or use one with a lower rating.

Illustration	Symbol	Part Name	Abbreviation
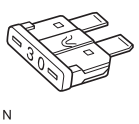 N	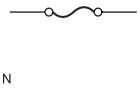 N	FUSE	FUSE

Illustration	Symbol	Part Name	Abbreviation
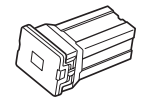 N	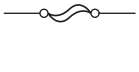 N	MEDIUM CURRENT FUSE	M-FUSE
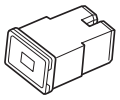 N	 N	HIGH CURRENT FUSE	H-FUSE
 N	 N	FUSIBLE LINK	FL
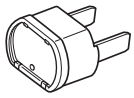 N	 N	CIRCUIT BREAKER	CB

(g) CLIPS

(1) The removal and installation methods of typical clips used in body parts are shown in the table below.

HINT:

If clips are damaged during a procedure, always replace the damaged clip with a new clip.

IN

Shape (Example)	Removal/Installation
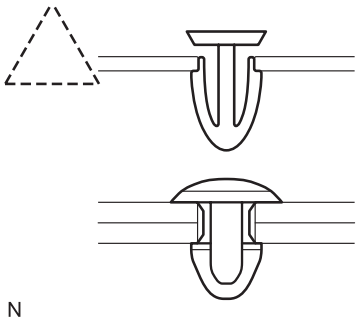 N	Remove clips with clip remover or pliers. 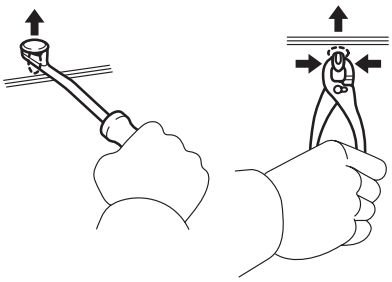 N
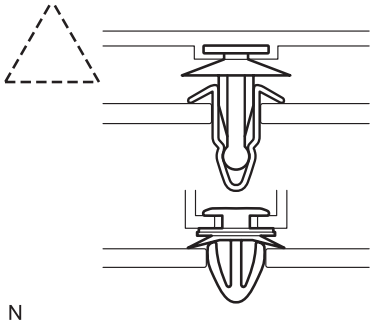 N	Remove fasteners with clip remover or screwdriver. 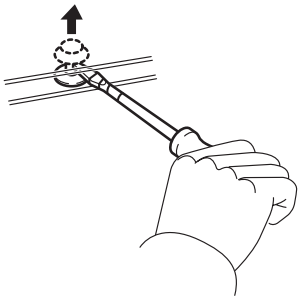 N
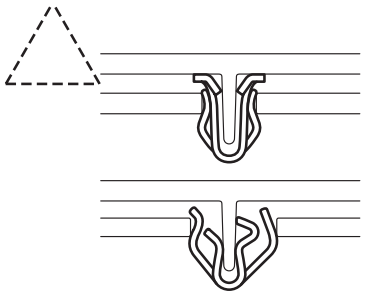 N	Remove clips with wide scraper to prevent panel damage. 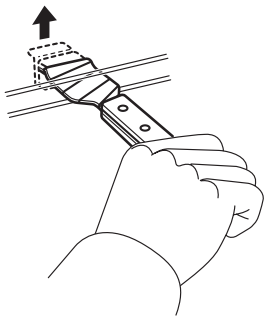 N
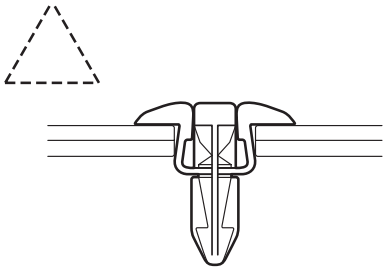 N	Remove clips by pushing center pin through and prying out shell. 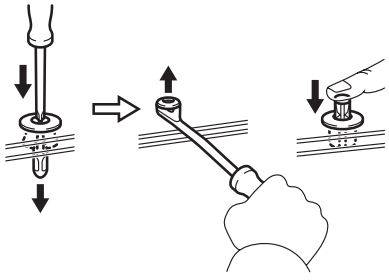 N

Shape (Example)	Removal/Installation
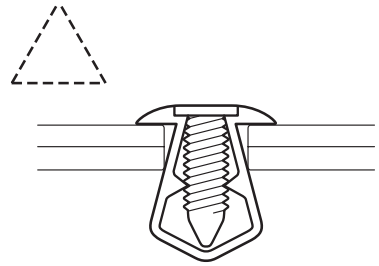 N	Remove clips by unscrewing center pin and prying out shell. 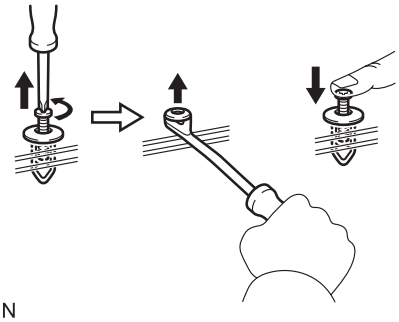 N
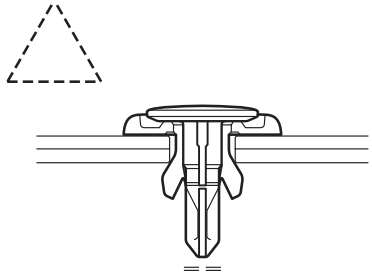 N	Remove clips by prying out pin and then prying out shell. 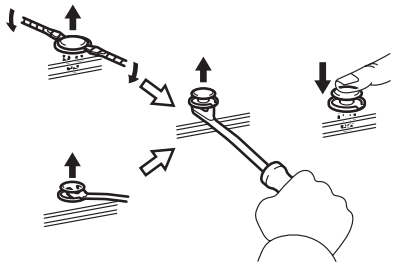 N

(h) CLAWS

(1) The removal and installation methods of typical claws used for vehicle body parts are shown in the table below.

HINT:

If claws are damaged during a procedure, always replace the damaged claws with a new caps or covers.

Shape (Example)	Illustration	Procedures
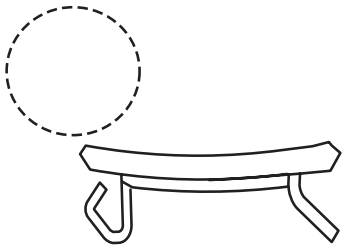	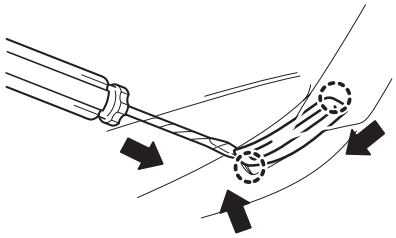	1. Using a screwdriver, detach the claws and remove the cap or covers.
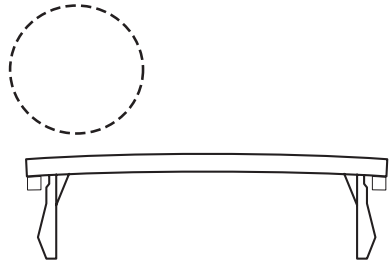	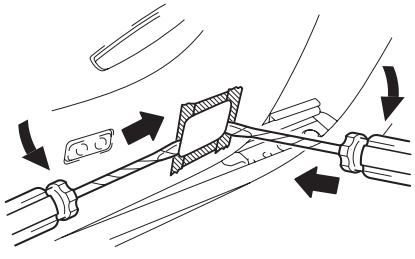	1. Using a screwdriver, detach the claws and remove the cap or covers.

Shape (Example)	Illustration	Procedures
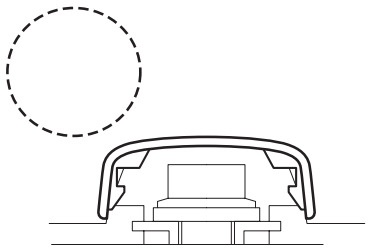	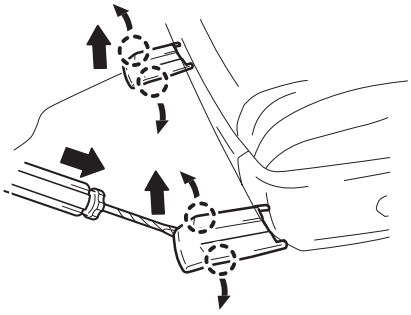	1. Using a screwdriver, detach the claws and remove the cap or covers.

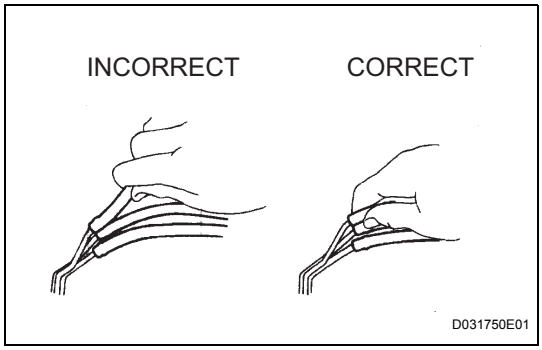

(i) REMOVAL AND INSTALLATION OF VACUUM HOSES

(1) To disconnect a vacuum hose, pull and twist from the end of the hose. Do not pull from the middle of the hose as this may cause damage.

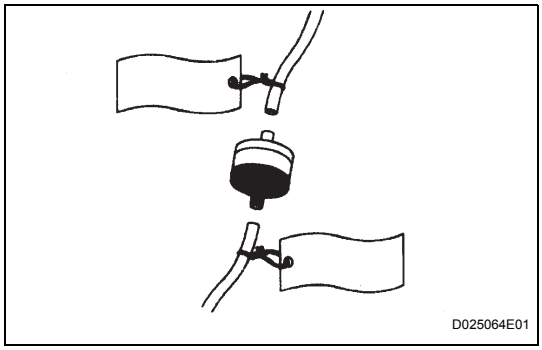

(2) When disconnecting vacuum hoses, use tags to identify where they should be reconnected.

(3) After completing the job, double check that the vacuum hoses are properly connected. The label under the hood shows the proper layout.

(4) When using a vacuum gauge, never force the hose onto a connector that is too large. If a hose has been stretched, air may leak. Use a step-down adapter if necessary.

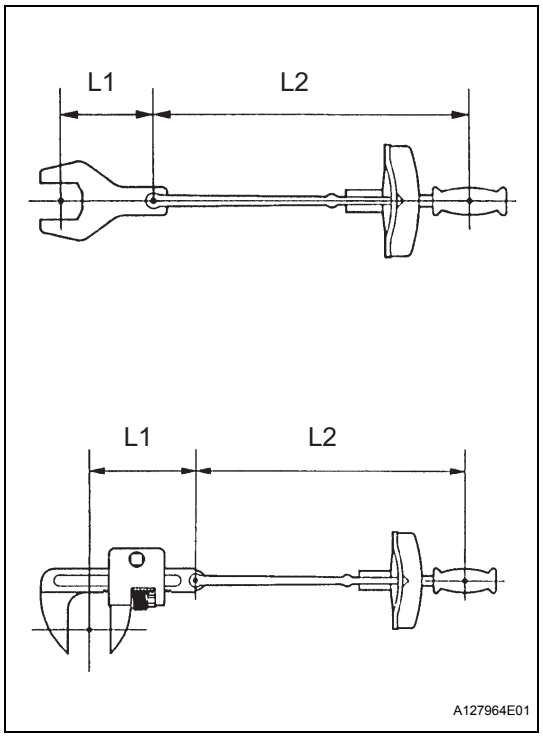

(j) TORQUE WHEN USING TORQUE WRENCH WITH EXTENSION TOOL

(1) Use the formula below to calculate special torque values for situations where SST or an extension tool is combined with the torque wrench.

Formula:

T' = L2/(L1 + L2) * T

T'	**Reading of torque wrench {N*m (kgf*cm, ft.*lbf)}**
T	**Torque {N*m (kgf*cm, ft.*lbf)}**
L1	**Length of SST or extension tool {cm (in.)}**
L2	**Length of torque wrench {cm (in.)}**

NOTICE:

If an extension tool or SST is combined with a torque wrench and the wrench is used to tighten to a torque specification in this manual, the actual torque will be excessive and parts will be damaged.

2. FOR VEHICLES EQUIPPED WITH SRS AIRBAG AND SEAT BELT PRETENSIONER

The AVALON is equipped with a Supplemental Restraint System (SRS).

CAUTION:

Failure to carry out the service operations in the correct sequence could cause the SRS to unexpectedly deploy during servicing and lead to serious injury. Furthermore, if a mistake is made when servicing SRS, it is possible that the SRS may fail to operate properly. Before servicing (including removal or installation of parts, inspection or replacement), be sure to read the following section carefully.

(a) GENERAL NOTICE

(1) As malfunctions of the SRS are difficult to confirm, the Diagnostic Trouble Codes (DTCs) become the most important source of information when troubleshooting. When troubleshooting the SRS, always check the DTCs before disconnecting the battery.

(2) Work must be started at least 90 seconds after the ignition switch is turned off and after the cable is disconnected from the negative (-) battery terminal.
The SRS is equipped with a back-up power source. If work is started within 90 seconds after turning the ignition switch off and disconnecting the cable from the negative (-) battery terminal, the SRS may deploy.
When the cable is disconnected from the negative (-) battery terminal, clock and audio system memory is erased. Before starting work, make a note of the settings of each memory system. When work is finished, reset the clock and audio system as before.
CAUTION:
Never use a back-up power source (battery or other) to avoid erasing system memory. The back-up power source may inadvertently power the SRS and cause it to deploy.

(3) In minor collisions where the SRS does not deploy, the steering pad, front passenger airbag assembly, driver side knee airbag assembly, front seat side airbag assembly, curtain shield airbag assembly and front seat outer belt assembly should be inspected before further use of the vehicle.
(See page RS-306 for steering pad)
(See page RS-330 for front passenger airbag assembly)
(See page RS-320 for front driver side knee airbags assembly)
(See page RS-346 for front seat side airbag assembly)
(See page RS-340 for curtain shield airbag assembly)
(See page SB-15 for front seat outer belt assembly)

(4) Never use SRS parts from another vehicle. When replacing parts, use new parts.

(5) Before repairs, remove the airbag sensor assemblies if impacts are likely to be applied to the sensor during repairs.

(6) Never disassemble and repair the airbag sensor assembly, horn button assembly, instrument panel passenger airbag assembly, curtain shield airbag assembly, front seat airbag assembly, instrument panel lower airbag assembly or seat belt pretensioner.

(7) Replace the airbag sensor assemblies and the airbag assemblies if: 1) damage has occurred from being dropped, or 2) cracks, dents or other defects in the case, bracket or connector are present.

(8) Do not directly expose the airbag sensor assembly or airbag assembly to hot air or flames.
(9) Use a voltmeter / ohmmeter with high impedance (minimum=10 kΩ) for troubleshooting electrical circuits.
(10) Information labels are attached to the SRS components. Follow the instructions on the labels.
(11) After work on the SRS is completed, check the SRS warning light.

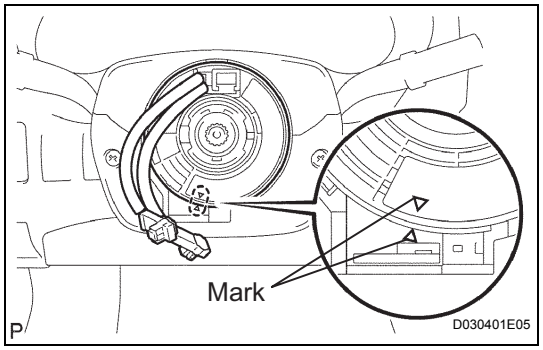

(b) SPIRAL CABLE
(1) The steering wheel must be fitted correctly to the steering column with the spiral cable at the neutral position, as cable disconnection and other problems may occur. Refer to the information about correct installation of the steering wheel (See page RS-315).

(c) STEERING PAD
(1) When removing the horn button assembly or handling a new horn button, it should be placed with the pad surface facing up. See illustration below.

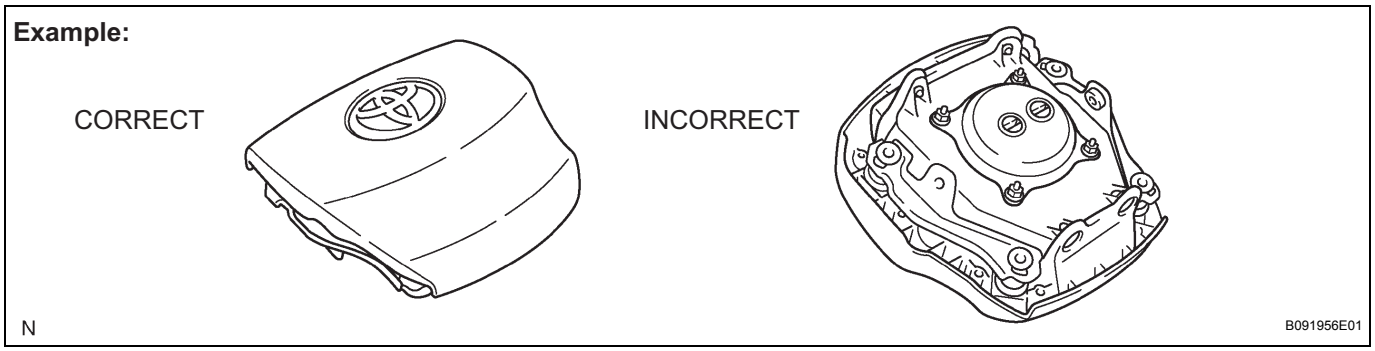

placing the horn button with the pad surface facing down may lead to a serious accident if the airbag accidentally inflates. Also, do not place anything on top of the horn button.
(2) Never measure the resistance of the airbag squib. This may cause the airbag to inflate, which could cause serious injury.

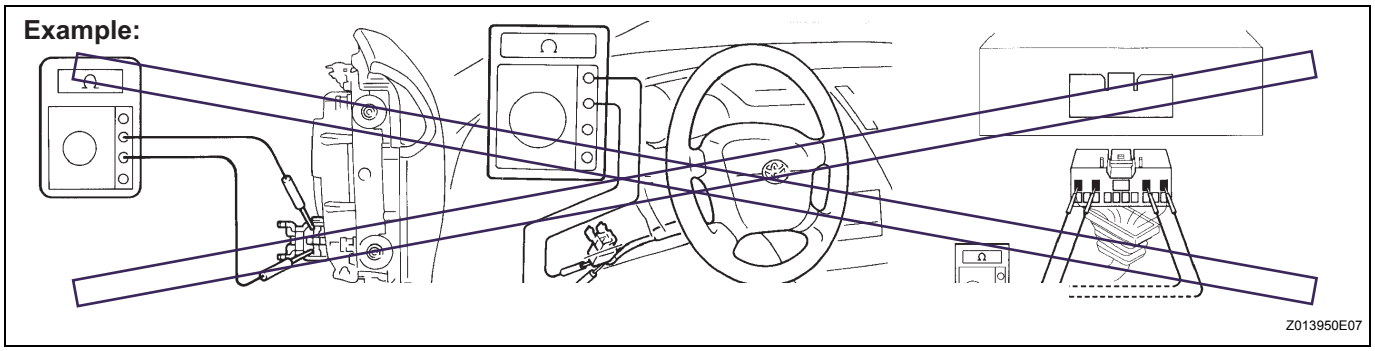

(3) Grease or detergents of any kind should not be applied to the steering wheel pad.

(4) Store the horn button assembly in an area where the ambient temperature is below 93°C (200°F), the humidity is not high and electrical noise is not nearby.

(5) When using electric welding anywhere on the vehicle, disconnect the airbag ECU connectors (4 pins). These connectors contain shorting springs. This feature reduces the possibility of the airbag or seat belt pretensioner deploying due to currents entering the squib wiring.

(6) When disposing of the vehicle or the horn button assembly by itself, the airbag should be inflated using an SST before disposal (See page RS-306). Activate in a safe away from electrical noise.

(d) FRONT PASSENGER AIRBAG ASSEMBLY

(1) Always place a removed or new instrument panel passenger airbag assembly with the airbag inflation direction facing up.
Placing the airbag assembly with the airbag inflation direction facing down could cause a serious accident if the airbag inflates.

(2) Never measure the resistance of the airbag squib. This may cause the airbag to inflate, which could cause serious injury.

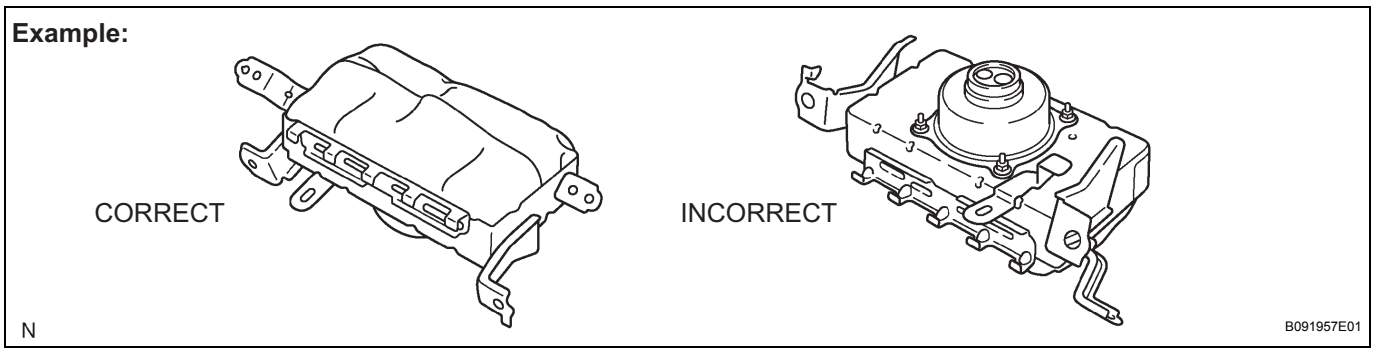

(3) Grease or detergents of any kind should not be applied to the instrument panel passenger airbag assembly.

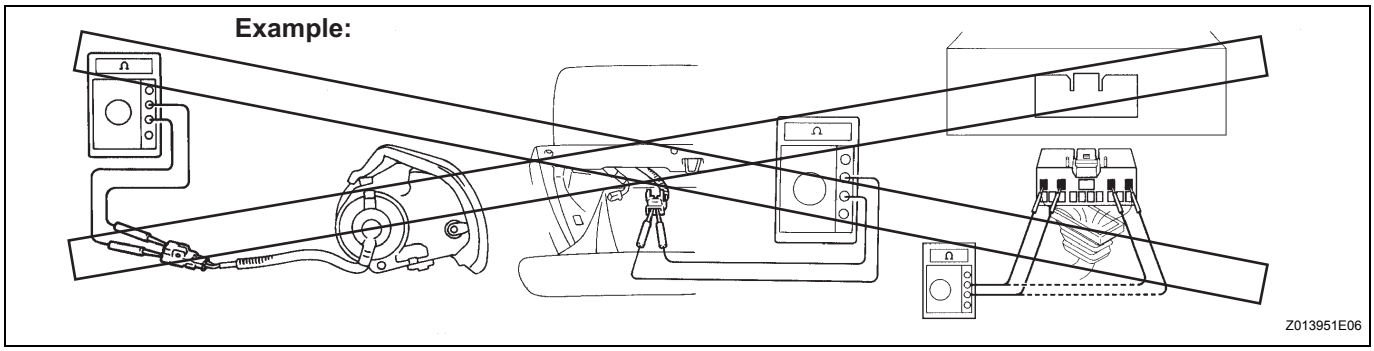

(4) Store the airbag assembly in an area where the ambient temperature is below 93°C (200°F), the humidity is not high and electrical noise is not nearby.

(5) When using electric welding anywhere on the vehicle, disconnect the airbag ECU connectors (4 pins). These connectors contain shorting springs. This feature reduces the possibility of the airbag deploying due to currents entering the squib wiring.

(6) When disposing of a vehicle or the airbag assembly unit by itself, the airbag should be deployed using SST before disposal (See page RS-330).
Activate in a safe place away from electrical noise.

(e) FRONT DRIVER SIDE KNEE AIRBAG ASSEMBLY

(1) Always store a removed or new instrument panel lower airbag assembly with the airbag inflating direction facing upward.

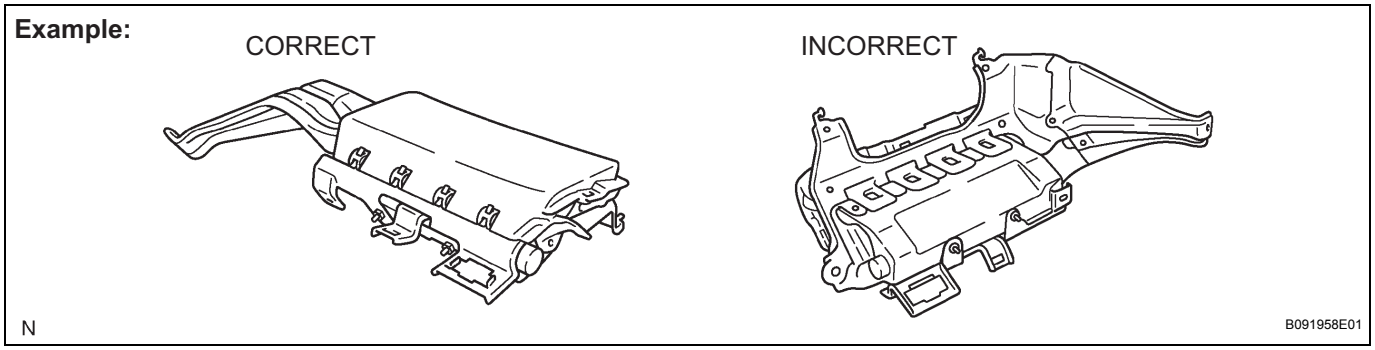

Placing the airbag assembly with the airbag inflation direction facing downward could cause a serious accident if the airbag inflates.

(2) Never measure the resistance of the airbag squib. This may cause the airbag to inflate, which could cause serious injury.

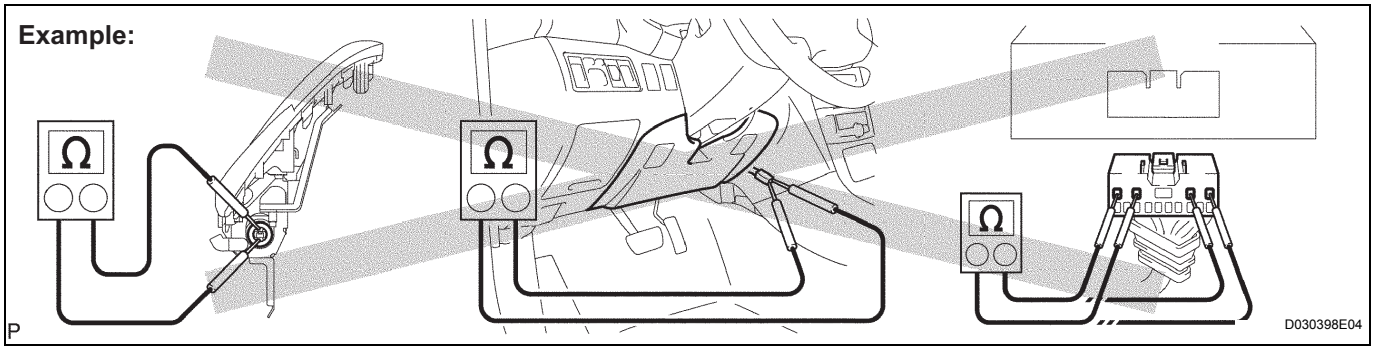

(3) Grease or detergents of any kind should not be applied to the front seat airbag assembly.

(4) Store the instrument panel lower airbag assembly where the ambient temperature remains below 93°C (200°F), without high humidity and away from electrical noise.

(5) When using electric welding, first disconnect the airbag connector (2 pins) installed on the instrument panel lower airbag assembly before starting work.

(6) When disposing of a vehicle or the instrument panel lower airbag assembly unit by itself, the airbag should be inflated using an SST before disposal (See page RS-320).
Activate in a safe place away from electrical noise.

(f) FRONT SEAT AIRBAG ASSEMBLY

(1) Always place a removed or new front seat airbag assembly with the airbag inflation direction facing up.
Placing the airbag assembly with the airbag inflation direction facing download could cause a serious accident if the airbag deploys.

(2) Never measure the resistance of the airbag squib. This may cause the airbag to inflate, which could cause serious injury.

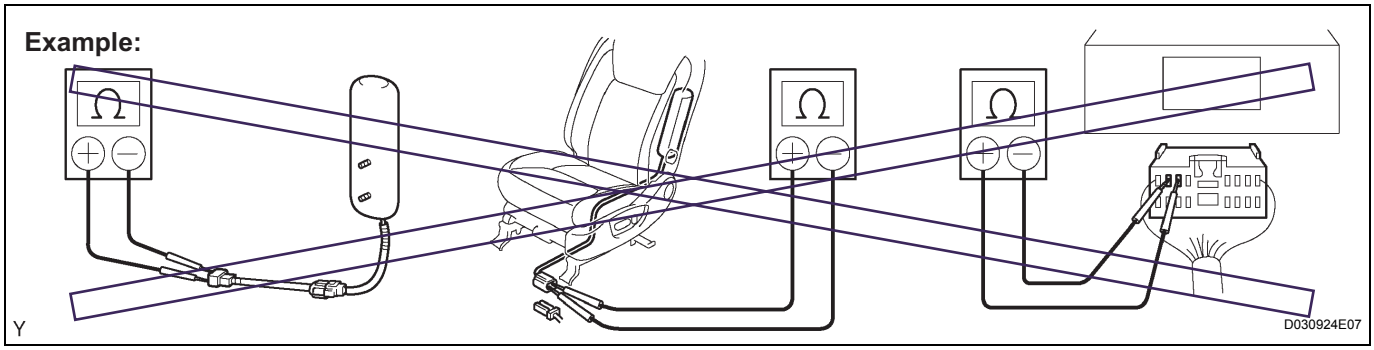

(3) Grease or detergents of any kind should not be applied to the front airbag assembly.

(4) Store the airbag assembly in an area where the ambient temperature is below 93°C (200°F), the humidity is not high and electrical noise is not nearby.

(5) When using electric welding anywhere on the vehicle, disconnect the airbag ECU connectors (2 pins). These connectors contain shorting springs. This feature reduces the possibility of the airbag deploying due to currents entering the squib wiring.

(6) When disposing of a vehicle or the airbag assembly unit by itself, the airbag should be deployed using SST before disposal (See page RS-346).
Activate in a safe place away from electrical noise.

(g) CURTAIN SHIELD AIRBAG ASSEMBLY

(1) Always place the removed or new curtain shield airbag assembly in a clear plastic bag, and keep it in a safe place.

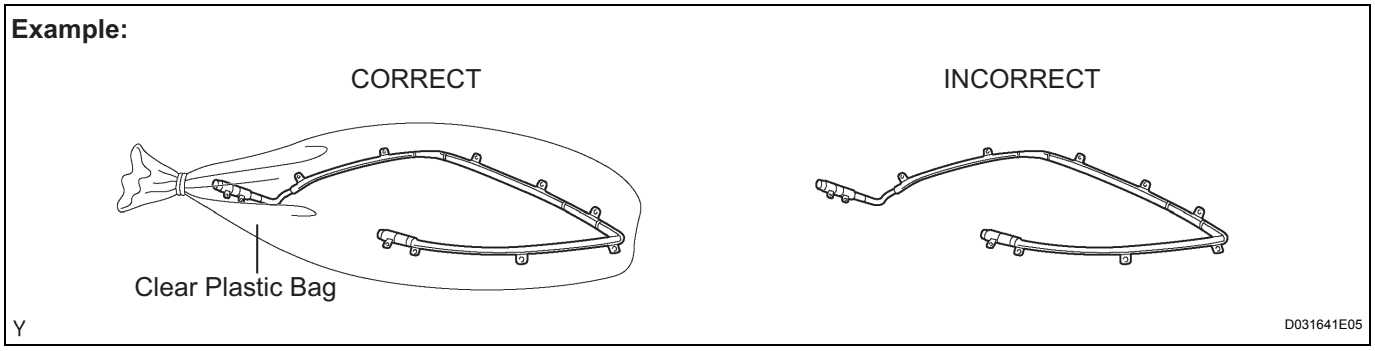

NOTICE:
Plastic bag is re-useable.
CAUTION:
Never disassemble the curtain shield airbag assembly.

(2) Never measure the resistance of the airbag squib. This may cause the airbag to inflate, which could cause serious injury.

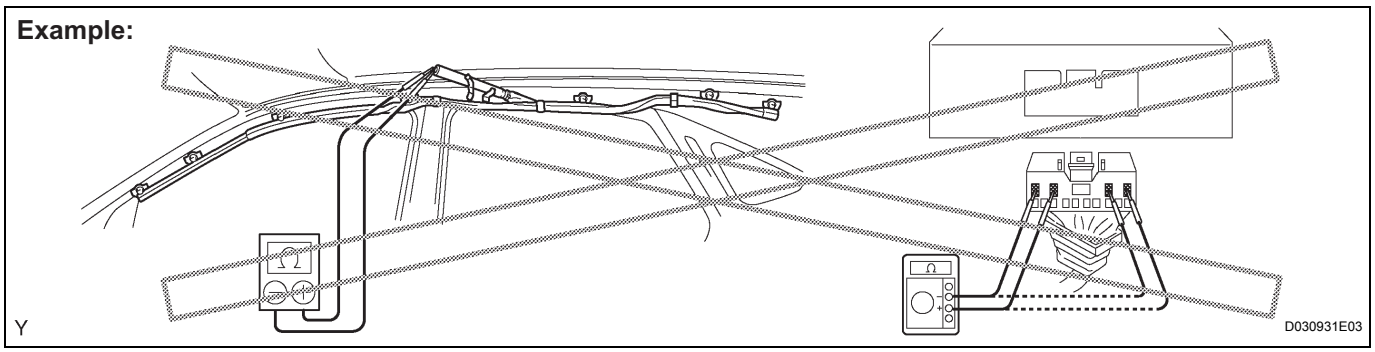

(3) Grease or detergents of any kind should not be applied to the curtain shield airbag assembly.

(4) Store the airbag assembly in an area where the ambient temperature is below 93°C (200°F), the humidity is not high and electrical noise is not nearby.

(5) When using electric welding anywhere on the vehicle, disconnect the airbag ECU connectors (2pins). These connectors contain shorting springs. This feature reduces the possibility of the airbag deploying due to currents entering the squib wiring.

(6) When disposing of a vehicle or the curtain shield airbag assembly unit, the airbag should be deployed using SST before disposal (See page RS-340).
Activate in a safe place away from electrical noise.

(h) FRONT SEAT OUTER BELT ASSEMBLY (SEAT BELT PRETENSIONER)

(1) Never measure the resistance of the seat belt pretensioner. This may cause the seat belt pretensioner to activate, which could cause serious injury.

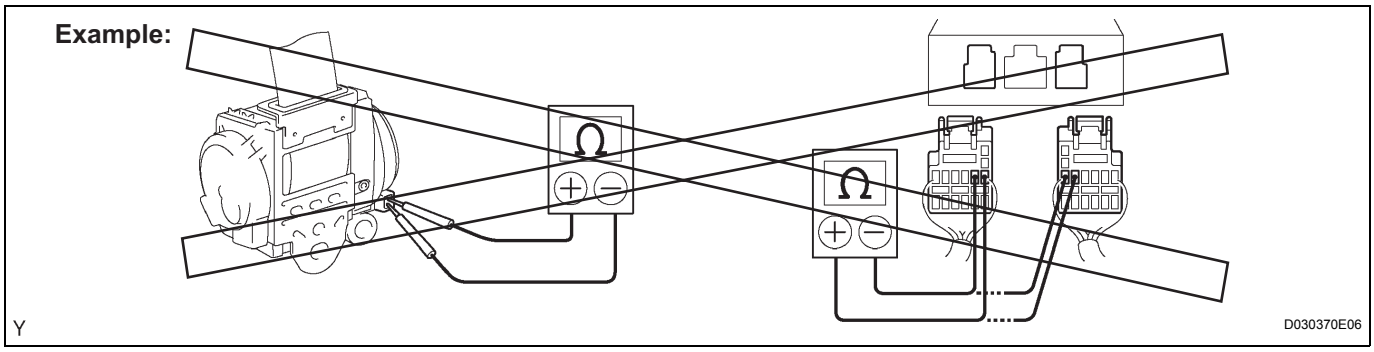

(2) Never disassemble the seat belt pretensioner.

(3) Never install the seat belt pretensioner on another vehicle.

(4) Store the seat belt pretensioner in an area where the ambient temperature is below 80°C (176°F), the humidity is not high and electrical noise is not nearby.

(5) When using electric welding anywhere on the vehicle, disconnect the airbag ECU connectors (2 pins). These connectors contain shorting springs. This feature reduces the possibility of the airbag deploying due to currents entering the squib wiring.

(6) When disposing of a vehicle or the seat belt pretensioner unit by itself, the seat belt pretensioner should be activated before disposal (See page SB-15). Activate in a safe place away from electrical noise.

(7) As the seat belt pretensioner is hot after being activated, allow some time for it to cool down sufficiently before disposal. Never apply water to try to cool down the seat belt pretensioner.

(8) Grease, detergents, oil or water should not be applied to the front seat outer belt.

(i) AIRBAG SENSOR ASSEMBLY

(1) Never reuse an airbag sensor assembly that has been involved in a collision where the SRS has deployed.

(2) The connectors to the airbag sensor assembly should be connected or disconnected with the sensor mounted on the floor. If the connectors are connected or disconnected while the airbag sensor assembly is not mounted to the floor, the SRS may activate.

(3) Work must be started at least 90 seconds after the ignition switch is turned to the LOCK position and the negative (-) terminal cable is disconnected from the battery, even if only loosening the set bolts of the airbag sensor assembly.

(j) WIRE HARNESS AND CONNECTOR

(1) The SRS wire harness is integrated with the instrument panel wire harness assembly. All the connectors in the system are a standard yellow color. If the SRS wire harness becomes disconnected or the connector becomes broken, repair or replace it.

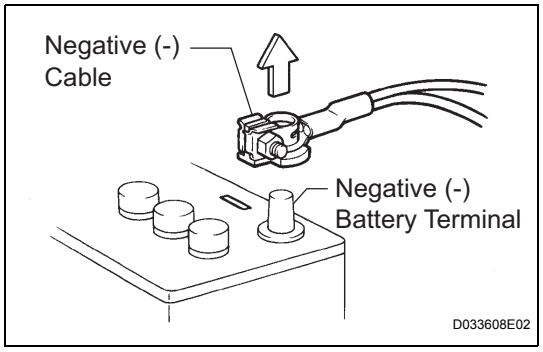

3. ELECTRONIC CONTROL

(a) REMOVAL AND INSTALLATION OF BATTERY TERMINAL

NOTICE:

After disconnecting the negative (-) terminal, it is necessary to perform the initialization of certain systems.

(b) REMOVAL AND INSTALLATION OF BATTERY CABLE

(1) Before performing electronic work, disconnect the cable from the negative (-) battery terminal to prevent component and wire damage caused by accidental short circuits.

(2) When disconnecting the cable, turn the ignition switch and headlight dimmer switch off and loosen the cable nut completely. Perform these operations without twisting or prying the cable. Then disconnect the cable.

(3) Clock settings, radio settings, audio system memory, DTCs and other data are erased when the cable is disconnected from the negative (-) battery terminal. Write down any necessary data before disconnecting the cable.

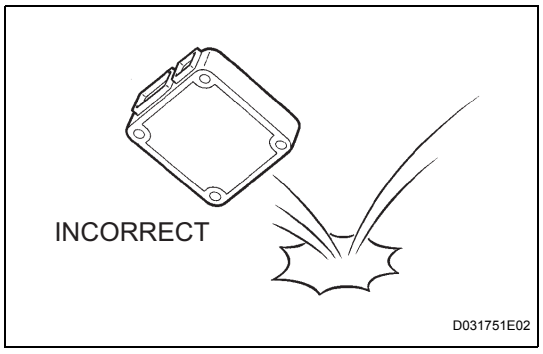

(c) HANDLING OF ELECTRONIC PARTS

(1) Do not open the cover or case of the ECU unless absolutely necessary. If the IC terminals are touched, the IC may be rendered inoperative by static electricity.

(2) Do not pull the wires when disconnecting electronic connectors. Pull the connector itself.

(3) Do not drop electronic components, such as sensors or relays. If they are dropped on a hard surface, they should be replaced.

(4) When cleaning the engine with steam, protect the electronic components, air filter and emission-related components from water.

(5) Never use an impact wrench to remove or install temperature switches or temperature sensors.

(6) When measuring the resistance between terminals of a wire connector, insert the tester probe carefully to prevent terminals from bending.

4. REMOVAL AND INSTALLATION OF FUEL CONTROL PARTS

(a) PLACE FOR REMOVING AND INSTALLING FUEL SYSTEM PARTS
  (1) Work in a location with good air ventilation that does not have welders, grinders, drills, electric motors, stoves, or any other ignition sources.
  (2) Never work in a pit or near a pit as vaporized fuel will collect in those places.

(b) REMOVING AND INSTALLING FUEL SYSTEM PARTS
  (1) Prepare a fire extinguisher before starting the operation.
  (2) To prevent static electricity, install a ground wire to the fuel changer, vehicle and fuel tank, do not spray the surrounding area with water. Be careful when performing work in this area, as the work surface will become slippery. Do not clean up gasoline spills with water, as this may cause the gasoline to spread, and possibly create a fire hazard.
  (3) Avoid using electric motors, working lights and other electric equipments that can cause sparks or high temperatures.
  (4) Avoid using iron hammers as they may create sparks.
  (5) Dispose of fuel-contaminated cloth separately using a fire resistant container.

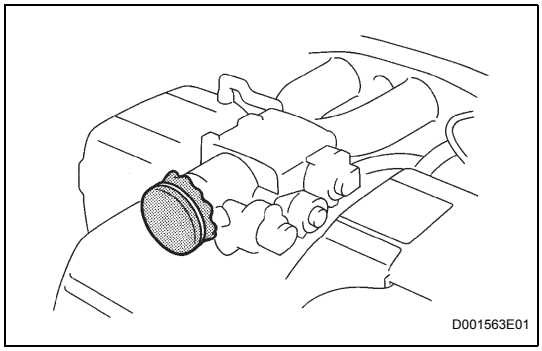
D001563E01

5. REMOVAL AND INSTALLATION OF ENGINE INTAKE PARTS

(a) If any metal particles enter inlet system parts, this may damage the engine.

(b) When removing and installing inlet system parts, cover the openings of the removed parts and engine openings. Use gummed tape or other suitable materials.

(c) When installing inlet system parts, check that no metal particles have entered the engine or the installed parts.

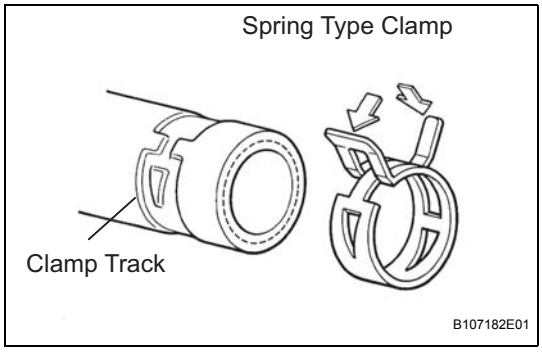

B107182E01

6. HANDLING OF HOSE CLAMPS

(a) Before removing the hose, check the clamp position so that it can be reinstalled in the same position.

(b) Replace any deformed or dented clamps with new ones.

(c) When reusing a hose, attach the clamp on the clamp track portion of the hose.

(d) For a spring type clamp, you may want to spread the tabs slightly after installation by pushing in the direction of the arrows as shown in the illustration.

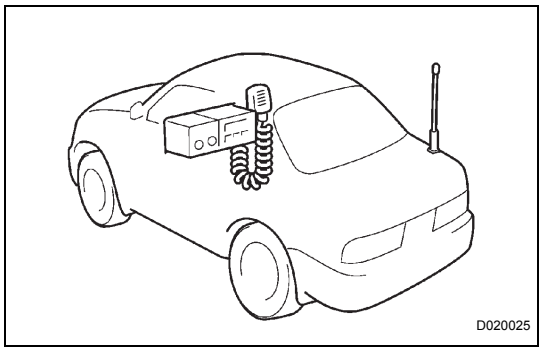

7. FOR VEHICLES EQUIPPED WITH MOBILE COMMUNICATION SYSTEMS

(a) Install the antenna far away from the ECU and sensors of the vehicle electronic systems as possible.

(b) Install an antenna feeder at least 20 cm (7.87 in.) away from the ECU and sensors of the vehicle electronic systems. For details about ECU and sensors locations, refer to the section on the applicable components.

(c) Keep the antenna and feeder separate from other wirings as much as possible. This will prevent signals sent from the communication equipment from affecting vehicle equipment and vice-versa.

(d) Check that the antenna and feeder are correctly adjusted.

(e) Do not install any high-powered mobile communication system.

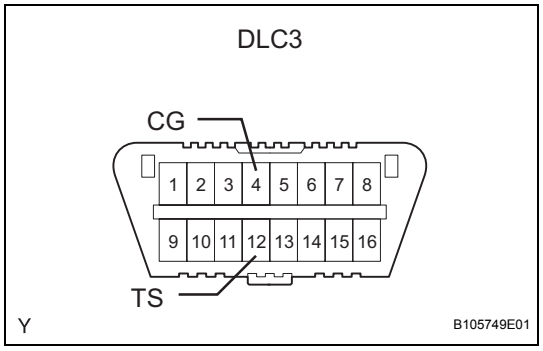

8. FOR VEHICLES EQUIPPED WITH VEHICLE STABILITY CONTROL (VSC) SYSTEM

(a) NOTICES WHEN USING DRUM TESTER

(1) Before beginning testing, disable the VSC. To disable the VSC, turn the ignition switch off and connect SST to terminals TS and CG of the DLC3.

SST 09843-18040

NOTICE:

- **Confirm that the VSC warning light blinks.**
- **VSC system will be reset when the engine is restarted.**
- **For safety, secure the vehicle with restraint chains while using a wheel dynamometer.**

(b) NOTICES OF RELATED OPERATIONS TO VSC

(1) Do not carry out unnecessary installation and removal as it might affect the adjustment of VSC related parts.

(2) Be sure to follow the instructions for work preparation and final confirmation of proper operation of the VSC system.

9. FOR VEHICLES EQUIPPED WITH CATALYTIC CONVERTER

CAUTION:

If a large amount of unburned gasoline or gasoline vapors flow into the converter, it may cause over heating and create a fire hazard. To prevent this, observe the following precautions.

(a) Use only unleaded gasoline.

(b) Avoid prolonged idling.
Avoid idling the engine for more than 20 minutes.

(c) Avoid a spark jump test.

(1) Perform a spark jump test only when absolutely necessary. Perform this test as rapidly as possible.

IN

(2) While testing, never race the engine.

(d) Avoid a prolonged engine compression measurement.
Engine compression measurements must be performed as rapidly as possible.

(e) Do not run the engine when the fuel tank is nearly empty. This may cause the engine to misfire and create an extra load on the converter.

VEHICLE LIFT AND SUPPORT LOCATIONS

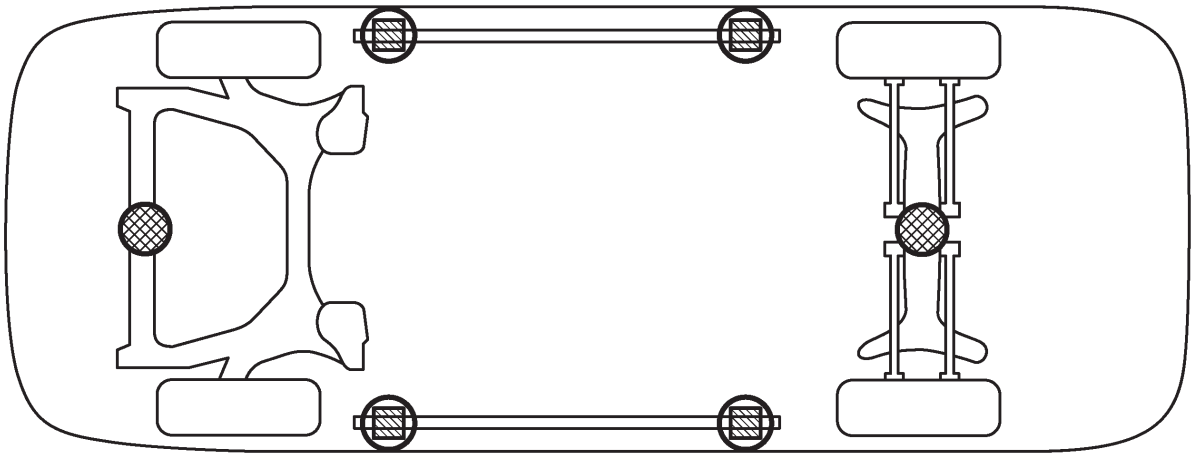

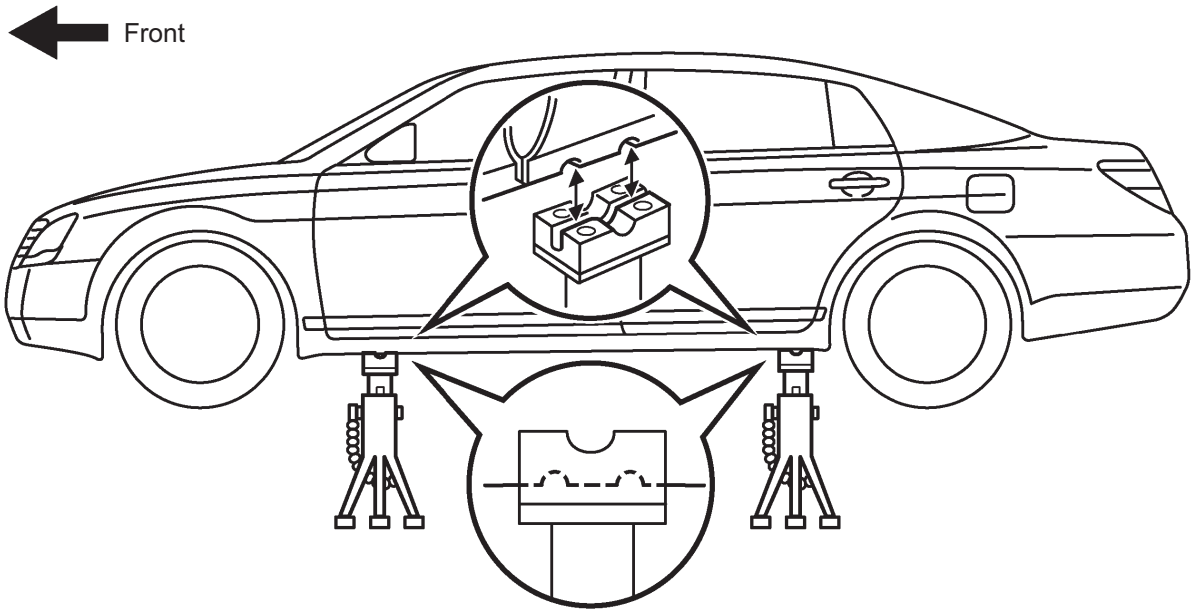

JACK POSITION

Front - - - - - - - - Front frame

Rear - - - - - - - - Rear suspension member

CAUTION :

When jacking up the front and rear, make sure the vehicle is not carrying any extra weight.

PANTOGRAPH JACK POSITION

SUPPORT POSITION

Safety stand and swing arm type lift .....

N

B091960E01

IN

Plate Type Lift

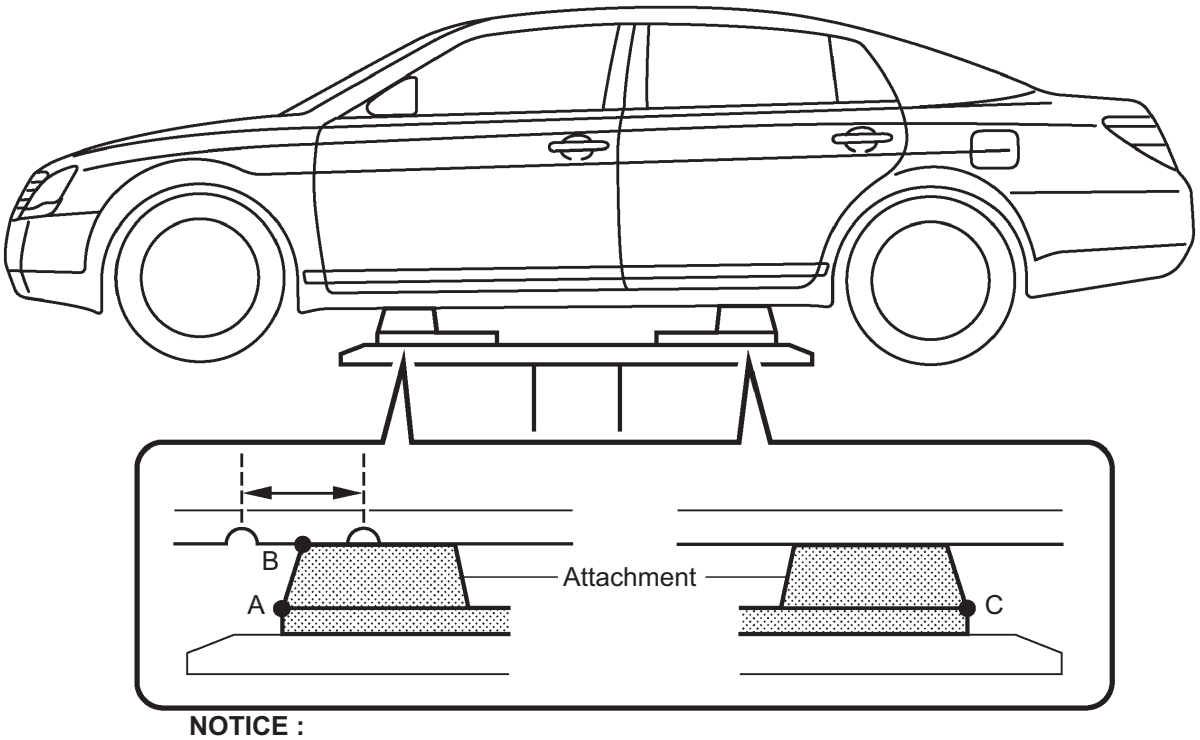

NOTICE :

Do not set an attachment onto any areas than area (C) of the body rocker panel moulding indicated in the illumination.

HINT:

Left and right set position — place the vehicle over the center of the lift.

Front and rear set position

- Place the attachments at the ends of the rubber plate surface, under the vehicle lift pad (A and C in the illustration).
- Raise the plate sightly and reposition the car so the top of the attchement (B in the illustartion) is aligned with the front side notch in the vehicle rocker flange.

Attachment Dimensions

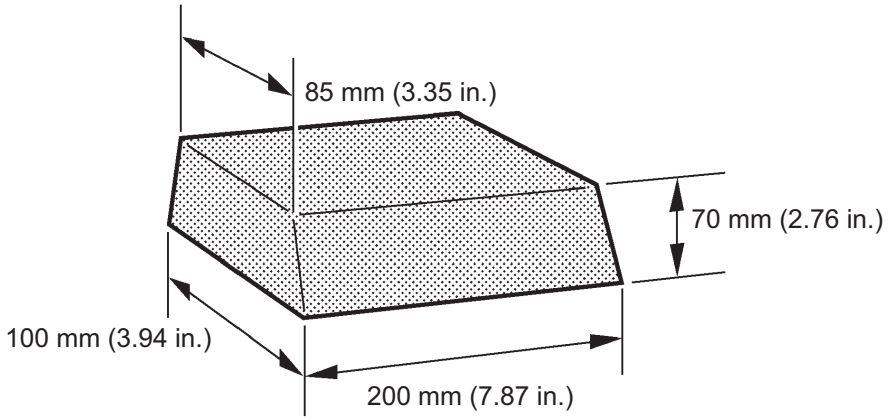

N

B091961E01

CUSTOMIZE PARAMETERS

HINT:
The following can be customized.

NOTICE:

- **After confirming whether the items of the customer's request are applicable or not for the customized items, perform the customize operation.**
- **Be sure to record the current value before customizing.**
- **In case of performing the troubleshooting, pay attention as there is a possibility that the function is OFF by customizing. (Example: In case of the symptom in which "The wireless operation does not function" is displayed, check that the wireless operation is not OFF by customizing, then perform the troubleshooting.)**

1. AIR CONDITIONING SYSTEM

AIR CONDITIONER

DISPLAY (ITEM)	DEFAULT	CONTENTS	SETTING
SET TEMP SHIFT (Set Temperature Shift)	NORMAL	To control with the shifted temperature against the display temperature.	+2C / +1C / NORMAL / -1C / -2C
AIR INLET MODE (Air Inlet Mode)	AUTO	In case of turning the A/C ON when you desire to make the compartment cool down quickly, this is the function to change the mode automatically to RECIRCULATED mode.	MANUAL / AUTO
COMPRESSOR MODE (Compressor Mode)	AUTO	Function to turn the A/C ON automatically by pressing the AUTO button when the blower is ON and the A/C is OFF.	MANUAL / AUTO
COMPRS/DEF OPER (Compressor/Air Inlet DEF Operation)	LINK	Function to turn the A/C ON automatically linking with the FRONT DEF button when A/C OFF.	NORMAL / LINK
EVAP CTRL (Evaporator Control)	AUTO	Function to set the evaporator control to the AUTOMATIC position (AUTO) to save power or to the coldest position (MANUAL) to dehumidify the air and to prevent the windows fogging up.	MANUAL / AUTO
BUTTON PRS BUZ (Button Press Buzzer)	ON	Function to sound a buzzer when a button is pressed.	OFF / ON
FOOT/DEF MODE (Foot/DEF auto mode)	ON	Function to turn the air flow from FOOT/DEF ON automatically when AUTO MODE is ON.	OFF / ON
AUTO BLOW UP (Foot/DEF automatic blow up function)	ON	Function to switch the blower level automatically when the defroster is ON.	OFF / ON
AMBIENT TMP SFT (Ambient Temperature Shift)	NORMAL	To control with the shifted ambient temperature against the display ambient temperature.	+3C / +2C / +1C / NORMAL / -1C / -2C / -3C
FOOT AIR LEAK (Foot Air Leak)	ON	Function to cut off the airstream felt underfoot while the vehicle is moving.	OFF / ON

2. LIGHTING SYSTEM

ILLUMINATED ENTRY

DISPLAY (ITEM)	DEFAULT	CONTENTS	SETTING
LIGHTING TIME (Lighting Time)	15 s	To change the lighting time after closing the door. (It will quickly fade out in case of turning the ignition on (IG).)	7.5 s / 15 s / 30 s
ILLUMI SYSTEM (Operation of illumination)	ON	Function to turn on the step light, center console light and door inside handle light when one of the following occurs; the ignition turned on (IG), door unlock or door open.	ON / OFF

DISPLAY (ITEM)	DEFAULT	CONTENTS	SETTING
LIGHT CONTROL (Light control)	ON	Function to turn on the step light and door inside handle light when the ignition switch is turned on (IG) and the shift lever is not in the P position.	ON / OFF
I/L ON / UNLOCK (Interior light ON w/ door key unlock)	ON	Function to turn on the interior light*, ignition light and step light when unlocking with the door key cylinder. *: Interior light comes on when the interior light switch is in the DOOR position.	ON / OFF
I/L ON/ACC OFF (Illumination system ON with ACC OFF)	ON	Function to turn on the interior light* and door courtesy light when the ignition switch is turned from on (ACC) to off. *: interior light comes on when the interior light switch is in the DOOR position.	ON / OFF

LIGHT CONTROL

DISPLAY (ITEM)	DEFAULT	CONTENTS	SETTING
LIGHT OFF DELAY (Light Auto OFF Delay)	30 s	Function to keep the headlight on for a certain period of time after closing all the doors when turning the ignition switch on (IG) under the condition that the light control switch is in the HEAD or AUTO position with the headlight ON.	OFF / 30 s / 60 s / 90 s
LIGHT CTRL TYPE (Control Type)	CURRENT	To change the control logic when the light control switch is in the AUTO position. Refer to the *table 1.	CURRENT / OLD
SENSITIVITY (Turn ON luminous intensity)	NORMAL	To adjust the sensitivity of the lighting illumination. Refer to the *illumination 1.	DARK2 / DARK1 / NORMAL / LIGHT1 / LIGHT2
DISP EX ON SEN (Display Extinction Luminous Intensity)	NORMAL	To dim the lights such as the indicator light of the combination meter, A/C indicator light, and clock. Refer to *illumination 2.	DARK2 / DARK1 / NORMAL / LIGHT1 / LIGHT2
DISP EX OFF SEN (Display Extinction Release Luminous Intensity)	NORMAL	To cancel to dim the lights such as the indicator light of the combination meter, A/C indicator light, and clock. Refer to *illumination 3.	DARK2 / DARK1 / NORMAL / LIGHT1 / LIGHT2

Table 1

	Brightness of the surrounding when lighting	Lighting delay	Delay of turning light off	**2
OLD	Old logic	6 sec.	6 sec.	3 sec.
CURRENT	New logic **1 ('97/8-)	15 sec.	15 sec.	15 sec.

**1: The new system has the ability to light up two times brighter than the old system.
**2: Delay time until the headlight is turned on when the outside suddenly gets dark.

Illumination 1

Lighting brightness	
Setting	

Illumination 2

Brightness when dimming the lights	
Setting	

Illumination 3

Brightness when canceling to dim the lights	
Setting	

3. WIPER AND WASHER SYSTEM

WIPER

DISPLAY (ITEM)	DEFAULT	CONTENTS	SETTING
AUTO WIPE (Auto wipe)	AVAIL	Function to operate the wiper automatically when it is raining.	NOT AVAIL / AVAIL
REWIPE CONTROL (Rewipe Control)	SPD MOD	Function to change the time between end of the washer motor operation and start of wiper operation, to prevent streaking from washer fluid.	OFF / 3s / SPD MOD
SPEED MODE (Speed Mode)	AVAIL	Function to change to the intermittent operation mode when the vehicle comes to a stop (0 vehicle speed) from a driving condition where the wiper switch is in the LO position.	NOT AVAIL / AVAIL

IN

4. COMBINATION METER

WARNING BUZZER:

DISPLAY (ITEM)	DEFAULT	CONTENTS	SETTING
KEY REMND VOLUM	LARGE	Function to change volume of key remind warning buzzer.	Big / Middle / Small
KEY REMND SOUND	900 ms	Function to change cycle of key remind warning buzzer.	600 ms / 900 ms / 1,200 ms

5. POWER DOOR LOCK CONTROL SYSTEM

Display (Item)	Default	Contents	Setting
Auto Lock	OFF	Function that locks the doors once when the vehicle speed reaches a certain level.	ON/OFF
Unlk/Key Twice	ON	Function that unlocks only driver side door when driver side door key cylinder is turned to unlock once and unlocks all the doors when it is turned to unlock twice.	ON/OFF
All Unlk/Opn-Cl	ON		ON/OFF
Unlock/Park	OFF	Function that unlocks doors when lever is shifted to P position from any position other than P while the ignition switch is ON.	ON/OFF

6. WIRELESS DOOR LOCK CONTROL SYSTEM

Display (Item)	Default	Function	Setting
OPEN DOOR WARN (Open door warning)	ON	If any door is not completely closed and transmitter lock switch is pressed, this function sounds buzzer for 10 seconds.	ON/OFF
WIRELESS OPER Wireless door lock control function)	ON	Function that turns wireless door lock function ON/OFF.	ON/OFF
ALARM FUNCTION (*1) (Panic function)	ON	Function that operates theft deterrent system when transmitter panic switch on transmitter is pressed and held for 2.5 seconds.	ON/OFF
UNLOCK/2OPER (Wireless unlock operated twice)	ON	Function that unlocks driver side door when unlock switch on transmitter is pressed once, and unlocks all doors when pressed twice. If setting is OFF, pressing unlock switch once makes all doors unlock.	ON/OFF
AUTO LOCK DELAY (Auto lock time)	30 s	This function regulates the interval between unlocking and automatic relocking of doors.	30 s/60 s

Display (Item)	Default	Function	Setting
WIRLS BUZZ RESP (Buzzer answer-back for wireless door lock control)	ON	Function that sounds wireless door lock buzzer for answer-back when lock/unlock switch on transmitter is pressed.	ON/OFF
HAZARD ANS BACK (Hazard answer-back for wireless door lock control)	ON	When lock switch on transmitter is pressed, this function blinks all hazard warning lights once. When unlock switch is pressed, all hazard warning lights blink twice.	ON/OFF
TRUNK LID OPER (Wireless trunk opener function setting)	0.8 s PR	Changes operation method of transmitter to open trunk.	1 TIME/2 TIMES/0.8 s PR/OFF

(*1): This function cannot be turned on or off if the security system is turned off.

7. SMART KEY SYSTEM

WIRELESS DOOR LOCK

Display (Item)	Default	Contents	Setting
OPEN DOOR WARN (Open door warning)	ON	Function to make the buzzer sound for 10 seconds if the door is open when locking with the wireless door lock function.	ON/OFF
WIRELESS OPER (Wireless door lock control function)	ON	ON/OFF of the wireless door lock function.	ON/OFF
ALARM FUNCTION (*1) (Panic function)	ON	Function to operate the theft deterrent system by keeping pressing the lock button of the transmitter for 2.5 seconds. If there is a panic button, press the panic button instead of the lock button.	ON/OFF
UNLOCK2 OPER (2 times operation wireless unlock)	ON	Function to unlock the driver's door by pressing the unlock button of the transmitter once and to unlock all the doors by pressing it twice. In the OFF setting, pressing one time makes all the doors unlocked.	ON/OFF
LUGGAGE COMPARTMENT LID OPER (Trunk lid open function type)	0.8 s PR	To change the operation method of opening the luggage compartment by the transmitter.	1 TIME/ 2 TIMES 0.8 s PR/OFF
AUTO LOCK DELAY (Auto lock time)	30 s	To change the time until re-locking after unlocking with the wireless door lock function.	60 s/30 s
HAZARD AND BACK (Hazard answer back of the wireless)	ON	Function to light up the all turn signal lights once when pressing the transmitter lock button and twice when pressing the unlock button.	ON/OFF
WIRLS BUZZ RESP (Wireless buzzer response)	ON	ON/OFF of the wireless buzzer response function.	ON/OFF

*1: w/ Theft deterrent system

WARNING (COMBINATION METER)

Display (Item)	Default	Contents	Setting
SMART WARN3 (Warn a key is taken out by fellow passengers)	ON	Function to warn that a key is taken out by fellow passengers (it means the key is taken out from except the driver's door) when ignition is not OFF.	ON/OFF
KEY LOW-BATT WRN (Warn when the key battery becomes weak)	ON	Setting a warning function for the first time when a key battery becomes weak.	ON/OFF
KEY REMND VOLUM (Key reminder buzzer volume)	LARGE	To change the volume of the key reminder buzzer.	LARGE/MEDIUM/SMALL

Display (Item)	Default	Contents	Setting
KEY REMND SOUND (Key reminder buzzer sound)	NORMAL	To change the frequency of the key reminder buzzer.	NORMAL/FAST/SLOW/0 s

SMART

Display (Item)	Default	Contents	Setting
SMART IGNITION (SMART ignition available area)	ALL	Function to choose the available area for smart key to start E/G and cancel the Steering Lock.	FRONT/ALL
PARK WAIT TIME (Wait time to permit opening door after locking)	2.5 s	Setting a wait time to permit opening a door after it being locked with SMART entry.	0.5 s/1.5 s/2.5 s/5 s
SMART TRUNK (Luggage compartment opening operation when vehicle is locked)	ON	Function to open a luggage compartment when the driver has the key and press the luggage open button.	ON/OFF
KEY LOW-BATT WRN	ON	Function to set a warning function for the time when a key battery becomes weak.	ON/OFF

8. THEFT DETERRENT SYSTEM

THEFT DETERRENT SYSTEM

DISPLAY (ITEM)	DEFAULT	CONTENTS	SETTING
PASSIVE MODE	OFF	For vehicles with the smart key system, PASSIVE MODE is the function that sets the theft deterrent system 30 seconds after the driver's door is closed from the open condition with the key removed from the ignition key cylinder. For vehicles without the smart key system, PASSIVE MODE is the function that sets the theft deterrent system 30 seconds after the driver's door is closed from the open condition with the ignition switch turned from on (IG) to off	ON/OFF
WARN BY GLS SEN	ON	Function that turns the glass break sensor on/off. This function is only effective for vehicles with glass break sensors.	ON/OFF
ENTRY DELAY	14s	Function that changes the entry delay time (period before starting the warning) for the passive mode.	0s/14s/30s
WARNING BY HORN	ON	Function to make the horn warning available.	ON/OFF

INITIALIZATION

NOTICE:
When disconnecting the negative (-) battery terminal, initialize the following system(s) after the terminal is reconnected.

System Name	See Step No.
Power Window Control System	1
Sliding Rood System	1

1. INITIALIZE FRONT POWER SEAT CONTROL SYSTEM

(a) The power seat ECU must be initialized under any of the following conditions.
- The battery is disconnected.
- The D/C CUT fuse is replaced.
- The power seat switch (power seat ECU) is replaced.
- The power seat assembly is removed from the vehicle.

(b) Initialize the power seat ECU as follows.
(1) Using the seat switches, fully slide the seat forward, fully recline the seatback forward, and fully raise the seat cushion and headrest.
(2) Using the seat switches, fully slide the seat rearward, fully recline the seatback rearward, and fully lower the seat cushion and headrest.

HOW TO TROUBLESHOOT ECU CONTROLLED SYSTEMS

GENERAL INFORMATION

A large number of ECU controlled systems are used in the AVALON. In general, ECU controlled systems are considered to be very intricate, requiring a high level of technical knowledge to troubleshoot. However, most problem checking procedures only involve inspecting the ECU controlled system's circuits one by one. An adequate understanding of the system and a basic knowledge of electricity is enough to perform effective troubleshooting, accurate diagnoses and necessary repairs.

FOR USING INTELLIGENT TESTER

– Before using the intelligent tester, read the tester operator's manual thoroughly.
– If the tester cannot communicate with the ECU controlled systems when the tester is connected to the DLC3 with the ignition switch on and the tester turned on, there is a problem on the vehicle side or tester side.
  (1) If communication is normal when the tester is connected to another vehicle, inspect the diagnosis data link line (Bus (+) line) or ECU power circuit of the vehicle.
  (2) If communication is still not possible when the tester is connected to another vehicle, the problem is probably in the tester itself. Perform the Self Test procedures outlined in the tester operator's manual.

IN

ELECTRONIC CIRCUIT INSPECTION PROCEDURE

1. BASIC INSPECTION

(a) WHEN MEASURING RESISTANCE OF ELECTRONIC PARTS

(1) Unless otherwise stated, all resistance measurements should be made at an ambient temperature of 20°C (68°F). Resistance measurements may be inaccurate if measured at high temperatures, i.e. immediately after the vehicle has been running. Measurements should be made after the engine has cooled down.

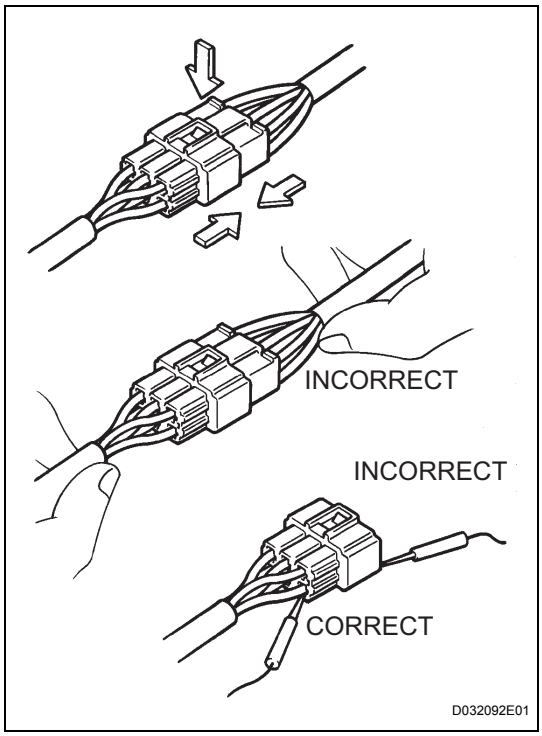

(b) HANDLING CONNECTORS

(1) When disconnecting a connector, first squeeze the mating connector housing halves tightly together to release the lock, and then press the lock claw and separate the connector.

(2) When disconnecting a connector, do not pull on the harnesses. Grasp the connector directly and separate it.

(3) Before connecting a connector, check that there are no deformations, damage, looseness or missing terminals.

(4) When connecting a connector, press firmly until it locks with a "click" sound.

(5) If checking a connector with a TOYOTA electrical tester, check the connector from the backside (harness side) using a mini test lead.
NOTICE:
- **As a waterproof connector cannot be checked from the backside, check it by connecting a sub-harness.**
- **Do not damage the terminals by moving the inserted tester needle.**

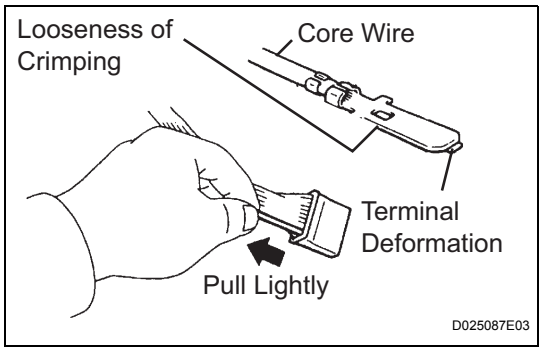

(c) CHECKING CONNECTORS

(1) Checking when a connectors is disconnected: Squeeze the connector together to confirm that they are fully connected and locked.

(2) Checking when a connector is disconnected: Check by pulling the wire harness lightly from the backside of the connector. Look for unlatched terminals, missing terminals, loose crimps or broken conductor wires. Check visually for corrosion, metallic or foreign matter and water, and bent, rusted, overheated, contaminated, or deformed terminals.

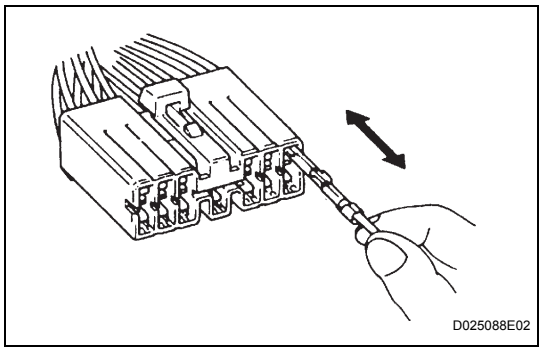

(3) Checking the contact pressure of the terminal:
Prepare a spare male terminal. Insert it into a female terminal, and check for ample tension when inserting and after full engagement.
NOTICE:
When testing a gold-plated female terminal, always use a gold-plated male terminal.

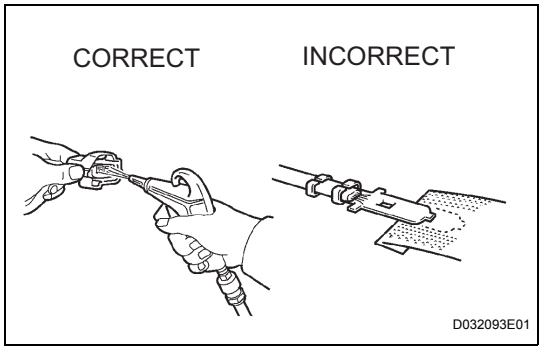

(d) REPAIR METHOD OF CONNECTOR TERMINAL
(1) If there is any foreign matter on the terminal, clean the contact point with compressed air or a cloth. Never rub the contact point using sandpaper as the plating may come off.
(2) If there is abnormal contact pressure, replace the female terminal. If the male terminal is gold-plated (gold color), use a gold-plated female terminal; if it is silver-plated (silver color), use a silver-plated female terminal.
(3) Damaged, deformed, or corroded terminals should be replaced. If the terminal does not lock into the housing, the housing may have to be replaced.

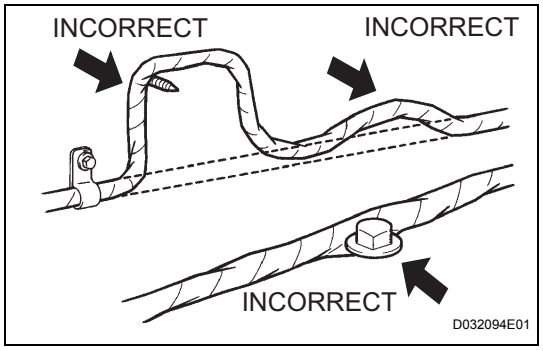

(e) HANDLING OF WIRE HARNESS
(1) If removing a wire harness, check the wiring and clamping before proceeding so that it can be restored in the same way.
(2) Never twist, pull or slacken the wire harness more than necessary.
(3) The wire harness should never come into contact with a high temperature part, or rotating, moving, vibrating or sharp-edged parts. Avoid contact with panel edges, screw tips and other sharp items.
(4) When installing parts, never pinch the wire harness.
(5) Never cut or break the cover of the wire harness. If it is cut or broken, replace it or repair it with vinyl tape.

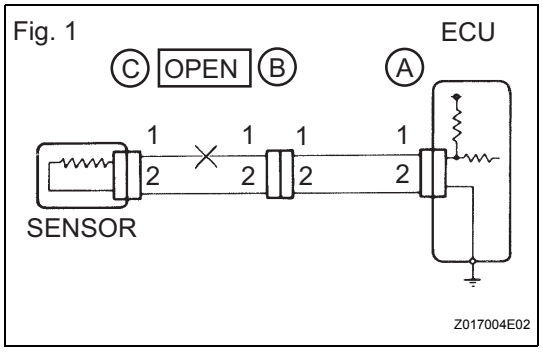

2. CHECK FOR OPEN CIRCUIT

(a) For an open circuit in the wire harness in Fig. 1, the resistance or voltage, as described below.

Fig. 2

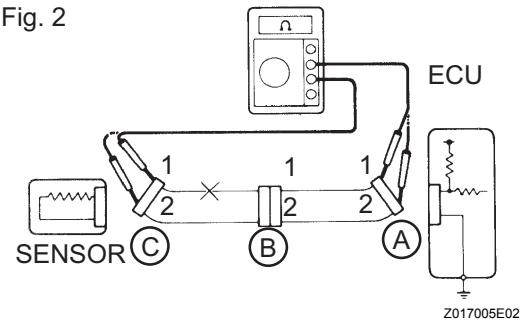

(b) Check the resistance.

(1) Disconnect connectors A and C and measure the resistance between the terminals of the connectors.

Standard resistance (Fig. 2)

Tester Connection	Specified Condition
Connector A terminal 1 - Connector C terminal 1	10 kΩ or higher
Connector A terminal 2 - Connector C terminal 2	Below 1Ω

HINT:

Measure the resistance while lightly shaking the wire harness vertically and horizontally. If the results match the examples above, an open circuit exists between terminal 1 of connector A and terminal 1 of connector C.

Fig. 3

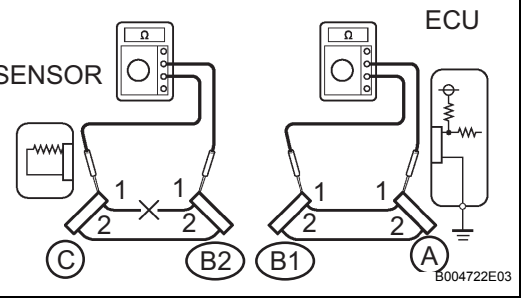

(2) Disconnect connector B and measure the resistance between the terminals of the connectors.

Standard resistance (Fig. 3)

Tester connection	Specified Condition
Connector A terminal 1 - Connector B1 terminal 1	Below 1 Ω
Connector B2 terminal 2 - Connector C terminal 2	10 kΩ or higher

If the results match the examples above, an open circuit exists between terminal 1 of connector B2 and terminal 1 of connector C.

Fig. 4

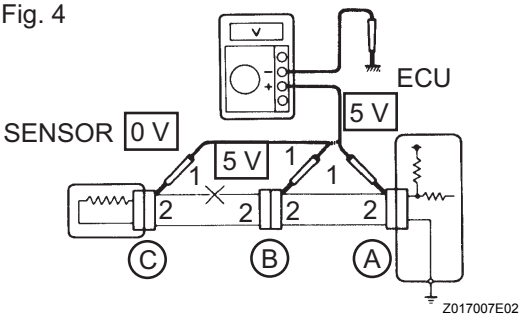

(c) Check the voltage.

(1) In a circuit in which voltage is applied to the ECU connector terminal, an open circuit can be checked by conducting a voltage check.
With each connector still connected, measure the voltage between the body ground and these terminals (in this order): 1) terminal 1 of connector A, 2) terminal 1 of connector B, and 3) terminal 1 of connector C.

Standard voltage (Fig. 4)

Tester Connection	Specified Condition
Connector A terminal 1 - Body ground	5 V
Connector B terminal 1 - Body ground	5 V
Connector C terminal 1 - Body ground	Below 1 V

If the results match the examples above, an open circuit exists in the wire harness between terminal 1 of connector B and terminal 1 of connector C.

Fig. 5

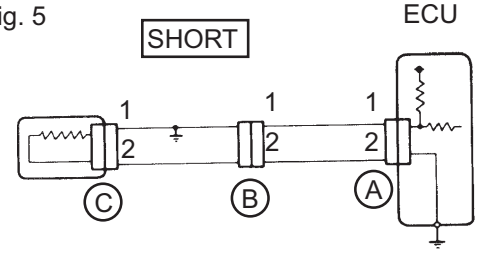

Fig. 6

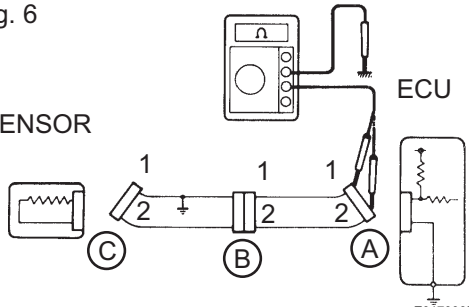

Fig. 7

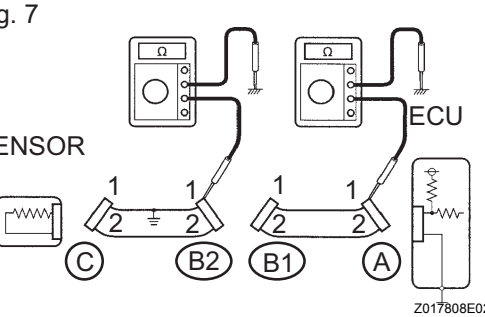

3. CHECK FOR SHORT CIRCUIT

(a) If the wire harness is ground shorted (Fig. 5), locate the section by conducting a resistance check with the body ground (below).

(b) Check the resistance with the body ground.

(1) Disconnect connectors A and C and measure the resistance.

Standard resistance (Fig. 6)

Tester Connection	Specified Condition
Connector A terminal 1 - Body ground	Below 1 Ω
Connector A terminal 2 - Body ground	10 kΩ or higher

HINT:

Measure the resistance while lightly shaking the wire harness vertically and horizontally. If your results match the examples above, an open circuit exists between terminal 1 of connector A and terminal 1 of connector C.

(2) Disconnect connector B and measure the resistance.

Standard resistance (Fig. 7)

Tester Connection	Specified Condition
Connector A terminal 1 - Body ground	10 kΩ or higher
Connector B2 terminal 2 - Body ground	Below 1 Ω

If the results match the examples above, a short circuit exists between terminal 1 of connector B2 and terminal 1 of connector C.

4. CHECK AND REPLACE ECU

NOTICE:

- **The connector should not be disconnected from the ECU. Perform the inspection from the backside of the connector on the wire harness side.**
- **When no measuring condition is specified, perform the inspection with the engine stopped and the ignition switch on.**
- **Check that the connectors are fully seated. Check for loose, corroded or broken wires.**

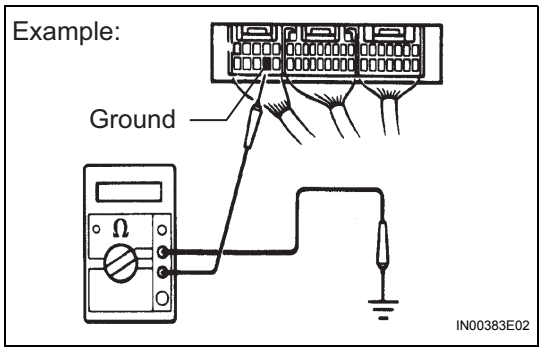

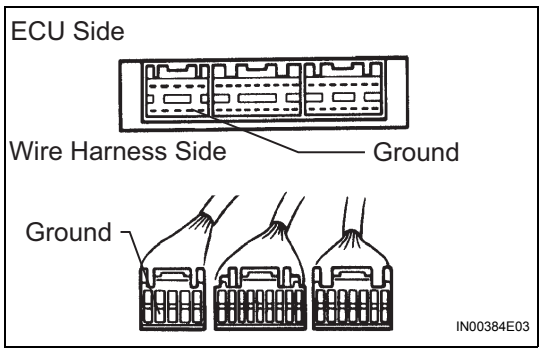

(a) First, check the ECU ground circuit. If it is faulty, repair it. If it is normal, the ECU could be faulty. Temporarily replace the ECU with a normally functioning one and check if the symptoms occur. If the trouble symptoms disappear, replace the original ECU.

(1) Measure the resistance between the ECU ground terminal and body ground.
Standard resistance:
Below 1 Ω

(2) Disconnect the ECU connector. Check the ground terminal on the ECU side and wire harness side for bending, corrosion or foreign matter. Lastly, check the contact pressure of the female terminals.

HOW TO PROCEED WITH TROUBLESHOOTING

1. OPERATION FLOW

HINT:
Perform troubleshooting in accordance with the procedures below. The following is an outline of basic troubleshooting procedures. Confirm the troubleshooting procedures for the circuit you are working on before beginning troubleshooting.

1 VEHICLE BROUGHT TO WORKSHOP

NEXT

2 CUSTOMER PROBLEM ANALYSIS

(a) Ask the customer about the conditions and environment when the problem occurred.

NEXT

3 INSPECT BATTERY VOLTAGE

Standard voltage:
11 to 14 V
If the voltage is below 11 V, recharge or replace the battery before proceeding.

NEXT

4 SYMPTOM CONFIRMATION AND DTC (AND FREEZE FRAME DATA) CHECK

(a) Visually check the wire harnesses, connectors and fuses for open and short circuits.
(b) Warm up the engine to the normal operating temperature.
(c) Confirm the problem symptoms and conditions, and check for DTCs

Result

Result	Proceed to
DTC is output	A
DTC is not output	B

B → **Go to step 6**

A

5	DTC CHART

(a) Check the results obtained in step 4. Then find the output DTC in the DTC chart. Look at the "Trouble Area" column for a list of potentially malfunctioning circuits and / or parts.

NEXT → Go to step 7

6	PROBLEM SYMPTOMS CHART

(a) Check the results obtained in step 4. Then find the problem symptoms in the problem symptoms table. Look at the "Suspected Area" column for a list of potentially malfunctioning circuits and / or parts.

NEXT

7	CIRCUIT INSPECTION OR PARTS INSPECTION

(a) Identify the malfunctioning circuit or part.

NEXT

8	ADJUST, REPAIR OR REPLACE

(a) Adjust, repair or replace the malfunctioning circuit or parts.

NEXT

9	CONFIRMATION TEST

(a) After the adjustment, repairs or replacement, confirm that the malfunction no longer exists. If the malfunction does not reoccur, perform a confirmation test under the same conditions and in the same environment as when the malfunction occurred the first time.

NEXT

END

2. CUSTOMER PROBLEM ANALYSIS

HINT:

- In troubleshooting, confirm that the problem symptoms have been accurately identified. Preconceptions should be discarded in order to make an accurate judgment. To clearly understand what the problem symptoms are, it is extremely important to ask the customer about the problem and the conditions at the time the malfunction occurred.
- Gather as much information as possible for reference. Past problems that seem unrelated may also help in some cases.
- The following 5 items are important points in the problem analysis:

What	Vehicle model, system name
When	Date, time, occurrence frequency
Where	Road conditions
Under what conditions?	Running conditions, driving conditions, weather conditions
How did it happen?	Problem symptoms

3. SYMPTOM CONFIRMATION AND DIAGNOSTIC TROUBLE CODE

HINT:

The diagnostic system in the AVALON has various functions.

- The first function is the Diagnostic Trouble Code (DTC) check. A DTC is a code stored in the ECU memory whenever a malfunction in the signal circuits to the ECU occurs. In a DTC check, a previous malfunction's DTC can be checked by a technician during troubleshooting.
- Another function is the Input Signal Check, which checks if the signals from various switches are sent to the ECU correctly.

  By using these functions, the problem areas can be narrowed down and troubleshooting is more effective. Diagnostic functions are incorporated in the following system in the AVALON.

System	DTC Check	Check Mode	Sensor Check/Test Mode (Input Signal Check)	DATA LIST	ACTIVE TEST
SFI System	○	○		○	○
ABS with EBD System	○		○	○	○
ABS with EBD & BA & TRAC & VSC System	○		○	○	○
Electronic Controlled Automatic Transmission [ECT]	○	○		○	○
Electric Steering Lock	○			○	○
Air Conditioning System	○			○	○
Supplemental Restraint System	○	○		○	
Lighting System	○			○	○
Wiper & Washer System				○	○
Audio System	○				
Navigation System	○				

System	DTC Check	Check Mode	Sensor Check/Test Mode (Input Signal Check)	DATA LIST	ACTIVE TEST
Combination Meter				○	○
Power Mirror Control System (w/ Memory)				○	○
Front Power Seat Control System (w/ Memory)				○	○
Power Door Lock Control System				○	
Wireless Door Lock Control System	○			○	○
Smart Key System	○			○	○
Engine Immobilizer System (w/o Smart Key System)	○			○	○
Push Button Start	○			○	○
Theft Deterrent System				○	○
Multiplex Communication System	○				
CAN Communication System	○				
Cruise Control System	○			○	○
Dynamic Laser Cruise Control System	○			○	○

- In the DTC check, it is very important to determine whether the problem indicated by the DTC either: 1) still occurs, or 2) occurred in the past but has returned to normal. In addition, the DTC should be compared to the problem symptom to see if they are related. For this reason, DTCs should be checked before and after confirmation of symptoms (i.e., whether or not problem symptoms exist) to determine current system conditions, as shown in the flowchart below.
- Never skip the DTC check. Failing to check DTCs may, depending on the case, result in unnecessary troubleshooting for systems operating normally or lead to repairs not related to the problem. Follow the procedures listed in the flowchart in the correct order.
- The following flowchart shows how to proceed with troubleshooting using the DTC check. Directions from the flowchart will indicate how to proceed either to DTC troubleshooting or to the troubleshooting of each problem symptom.

1	DTC CHECK

NEXT

2	MAKE A NOTE OF DTCS DISPLAYED AND THEN CLEAR MEMORY

NEXT

3	SYMPTOM CONFIRMATION

Result

Result	Proceed to
No symptoms exist	A
Symptoms exist	B

B → Go to step 5

A

4	SIMULATION TEST USING SYMPTOM SIMULATION METHODS

NEXT

5	DTC CHECK

Result

Result	Proceed to
DTC is not output	A
DTC is output	B

B → TROUBLESHOOTING OF PROBLEM INDICATED BY DTC

A

6	SYMPTOM CONFIRMATION

Result

Result	Proceed to
No symptoms exist	A
Symptoms exist	B

If a DTC was displayed in the initial DTC check, the problem may have occurred in a wire harness or connector in that circuit in the past. Check the wire harness and connectors.

B → SYSTEM NORMAL

A

TROUBLESHOOTING OF EACH PROBLEM SYMPTOM

The problem still occurs in a place other than the diagnostic circuit (the DTC displayed first is either for a past problem or a secondary problem).

4. SYMPTOM SIMULATION

HINT:

The most difficult case in troubleshooting is when no problem symptoms occur. In such a case, a thorough problem analysis must be carried out. A simulation of the same or similar conditions and environment in which the problem occurred in the customer's vehicle should be carried out. No matter how much skill or experience a technician has, troubleshooting without confirming the problem symptoms will lead to important repairs being overlooked and mistakes or delays.

For example:

With a problem that only occurs when the engine is cold or as a result of vibration caused by the road during driving, the problem can never be determined if the symptoms are being checked on a stationary vehicle or a vehicle with a warmed-up engine. Vibration, heat or water penetration (moisture) is difficult to reproduce. The symptom simulation tests below are effective substitutes for the conditions and can be applied on a stationary vehicle. Important points in the symptom simulation test:

In the symptom simulation test, the problem symptoms as well as the problem area or parts must be confirmed. First, narrow down the possible problem circuits according to the symptoms. Then, connect the tester and carry out the symptom simulation test, judging whether the circuit being tested is defective or normal. Also, confirm the problem symptoms at the same time. Refer to the problem symptoms table for each system to narrow down the possible causes.

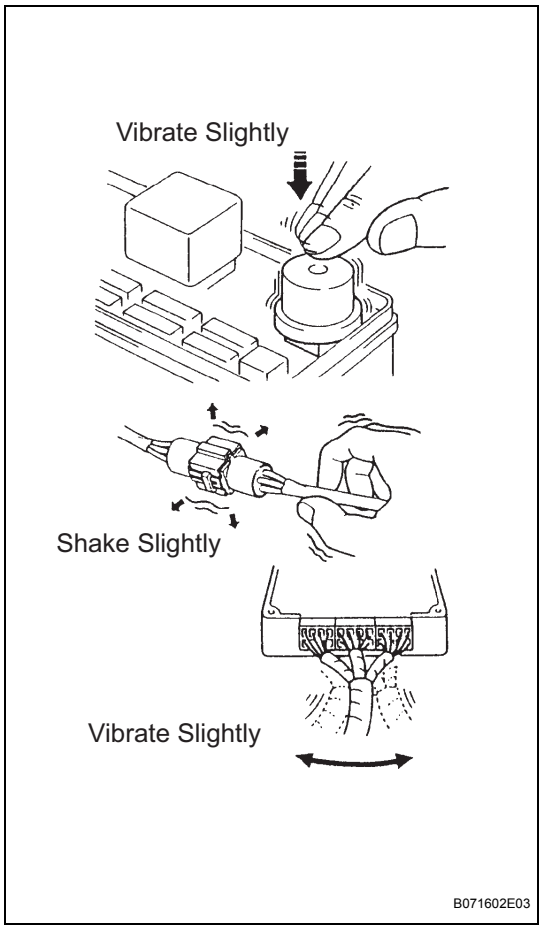

(a) VIBRATION METHOD: When a malfunction seems to occur as a result of vibration.
  (1) PART AND SENSOR
    Apply slight vibration with a finger to the part of the sensor suspected to be the cause of the problem, and check whether or not the malfunction occurs.
    NOTICE:
    Applying strong vibration to relays may open relays.
  (2) CONNECTORS
    Slightly shake the connector vertically and horizontally.
  (3) WIRE HARNESS
    Slightly shake the wire harness vertically and horizontally.
    HINT:
    The connector joint and fulcrum of the vibration are the major areas that should be checked thoroughly.

(b) HEAT METHOD: When a malfunction seems to occur when the area in question is heated.
  (1) Heat the component that is the possible cause of the malfunction with a hair dryer or similar device. Check if the malfunction occurs.
    NOTICE:
    - **Do not heat to more than 60°C (140°F). Exceeding this temperature may damage the components.**
    - **Do not apply heat directly to the parts in the ECU.**

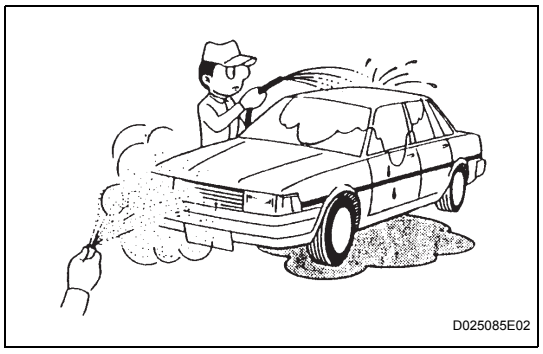

(c) WATER SPRINKLING METHOD: When a malfunction seems to occur on a rainy day or in high-humidity.
  (1) Sprinkle water onto the vehicle and check if the malfunction occurs.
    NOTICE:
    - **Never sprinkle water directly into the engine compartment. Indirectly change the temperature and humidity by spraying water onto the front of the radiator.**
    - **Never apply water directly onto the electronic components.**
    HINT:
    If the vehicle has or had a water leakage problem, the leakage may have damaged the ECU or connections. Look for evidence of corrosion or short circuits. Proceed with caution during water tests.

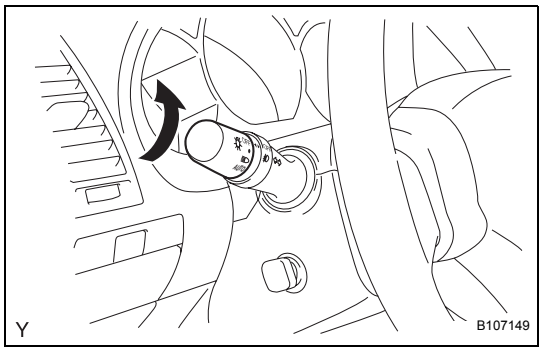

(d) HIGH ELECTRICAL LOAD METHOD: When a malfunction seems to occur when electrical load is excessive.
(1) Turn on the heater blower, headlight, rear window defogger and all other electrical loads. Check if the malfunction reoccurs.

5. DIAGNOSTIC TROUBLE CODE CHART

Look for output Diagnostic Trouble Codes (DTCs) (from the DTC checks) in the appropriate section's Diagnostic Trouble Code Chart. Use the chart to determine the trouble area and the proper inspection procedure. A description of each of the chart's columns is shown in the table below.

Item	Description
DTC No.	Indicates the diagnostic trouble code
Detection Item	Indicates the system or details of the problem
Trouble Area	Indicates the suspect areas of the problem
See Page	Indicates the page where the inspection procedures for each circuit is to be found, or gives instruction for checking and repairs.

6. PROBLEM SYMPTOMS TABLE

When a "Normal" code is output during a DTC check but the problem still occurs, use the Problem Symptoms Table. The suspected areas (circuits or parts) for each problem symptoms are in the table. The suspected areas are listed in order of probability. A description of each of the chart's columns is shown in the table below.

HINT:

In some cases, the problem is not detected by the diagnostic system even though a problem symptom occurs. It is possible that the problem is occurring outside the detection range of the diagnostic system, or that the problem occurs in a completely different system.

Item	Description
Problem Symptom	-
Circuit Inspection, Inspection Order	Indicates the order in which the circuits need to be checked
Circuit or Part Name	Indicates the circuit or part which needs to be checked
See Page	Indicates the page where the flowchart for each circuit is located

7. CIRCUIT INSPECTION

A description of the main areas of each circuit inspection is shown in the table below.

Item	Description
Circuit Description	The major role, operation of the circuit and its component parts are explained.
Diagnostic Trouble Code No. and Detection item	Indicates the diagnostic trouble codes, diagnostic trouble code settings and suspected areas for a problem
Wiring diagram	This shows a wiring diagram of the circuit. Use this diagram together with ELECTRICAL WIRING DIAGRAM to thoroughly understand the circuit. Wire colors are indicated by an alphabetical code. B = Black, L = Blue, R = Red, BR = Brown, LG = Light Green, V = Violet, G = Green, O = Orange, W = White, GR = Gray, P = Pink, Y = Yellow, SB = Sky Blue The first letter indicates the basic wire color and the second letter indicates the color of the stripe.

Item	Description
Inspection Procedures	Use the inspection procedures to determine if the circuit is normal or abnormal. If abnormal, use the inspection procedures to determine whether the problem is located in the sensors, actuators, wire harnesses or ECU.
Indicates the condition of the connector of the ECU during the check	Connector being checked is connected. Connections of tester are indicated by (+) or (-) after the terminal name. Connector being checked is disconnected. The inspections between a connector and body ground, information about the body ground is not shown in the illustration.

TERMS

ABBREVIATIONS USED IN MANUAL

Abbreviations	Meaning
ABS	Anti-Lock Brake System
A/C	Air Conditioner
AC	Alternating Current
ACC	Accessory
ACIS	Acoustic Control Induction System
ACM	Active Control Engine Mount
ACSD	Automatic Cold Start Device
A.D.D	Automatic Disconnecting Differential
A/F	Air-Fuel Ratio
AHC	Active Height Control Suspension
ALR	Automatic Locking Retractor
ALT	Alternator
AMP	Amplifier
ANT	Antenna
APPROX.	Approximately
ASSY	Assembly
A/T, ATM	Automatic Transmission (Transaxle)
ATF	Automatic Transmission Fluid
AUTO	Automatic
AUX	Auxiliary
AVG	Average
AVS	Adaptive Variable Suspension
B+	Battery Voltage
BA	Brake Assist
BACS	Boost Altitude Compensation System
BAT	Battery
BDC	Bottom Dead Center
B/L	Bi-Level
B/S	Bore-Stroke Ratio
BTDC	Before Top Dead Center
BVSV	Bimetallic Vacuum Switching Valve
CAN	Controller Area Network
CB	Circuit Breaker
CCo	Catalytic Converter For Oxidation
CCV	Canister Closed Valve
CD	Compact Disc
CF	Cornering Force
CG	Center Of Gravity
CH	Channel
CKD	Complete Knock Down
COMB.	Combination
CPE	Coupe
CPS	Combustion Pressure Sensor
CPU	Central Processing Unit
CRS	Child Restraint System
CTR	Center

Abbreviations	Meaning
C/V	Check Valve
CV	Control Valve
CW	Curb Weight
DC	Direct Current
DEF	Defogger
DFL	Deflector
DIFF.	Differential
DIFF. LOCK	Differential Lock
D/INJ	Direct Injection
DLC	Data Link Connector
DLI	Distributorless Ignition
DOHC	Double Overhead Camshaft
DP	Dash Pot
DS	Dead Soak
DSP	Digital Signal Processor
DTC	Diagnostic Trouble Code
DVD	Digital Versatile Disc
EBD	Electric Brake Force Distribution
EC	Electrochromic
ECAM	Engine Control And Measurement System
ECD	Electronically Controlled Diesel
ECDY	Eddy Current Dynamometer
ECT	Electronic Controlled Automatic Transmission
ECU	Electronic Control Unit
ED	Electro-Deposited Coating
EDU	Electronic Driving Unit
EDIC	Electric Diesel Injection Control
EFI	Electronic Fuel Injection
E/G	Engine
EGR	Exhaust Gas Recirculation
EGR-VM	EGR-Vacuum Modulator
ELR	Emergency Locking Retractor
EMPS	Electric Motor Power Steering
ENG	Engine
ESA	Electronic Spark Advance
ETCS-i	Electronic Throttle Control System-intelligent
EVAP	Evaporative Emission Control
EVP	Evaporator
E-VRV	Electric Vacuum Regulating Valve
EX	Exhaust
FE	Fuel Economy
FF	Front-Engine-Front-Wheel-Drive
F/G	Fuel Gauge
FIPG	Formed In Place Gasket
FL	Fusible Link
F/P	Fuel Pump
FPU	Fuel Pressure Up
FR	Front
FVCV	Fuel Tank Pressure Switching valve

Abbreviations	Meaning
F/W	Flywheel
FW/D	Flywheel Damper
FWD	Front-Wheel-Drive
GAS	Gasoline
GND	Ground
GPS	Global Positioning System
HAC	High Altitude Compensator
H/B	Hatchback
H-FUSE	High Current Fuse
HI	High
HID	High Intensity Discharge (Headlight)
HSG	Housing
HT	Hard Top
HWS	Heated Windshield System
IC	Integrated Circuit
IDI	Indirect Diesel Injection
IFS	Independent Front Suspension
IG	Ignition
IIA	Integrated Ignition Assembly
IN	Intake (Manifold, Valve)
INT	Intermittent
I/P	Instrument Panel
IRS	Independent Rear Suspension
ISC	Idle Speed Control
J/B	Junction Block
J/C	Junction Connector
KD	Kick-Down
LAN	Local Area Network
LB	Liftback
LCD	Liquid Crystal Display
LED	Light Emitting Diode
LH	Left-Hand
LHD	Left-Hand Drive
L/H/W	Length, Height, Width
LLC	Long-Life Coolant
LNG	Liquefied Natural Gas
LO	Low
LPG	Liquefied Petroleum Gas
LSD	Limited Slip Differential
LSP & BV	Load Sensing Proportioning and Bypass Valve
LSPV	Load Sensing Proportioning Valve
MAP	Manifold Absolute Pressure
MAX.	Maximum
MIC	Microphone
MIL	Malfunction Indicator Light
MIN.	Minimum
MG1	Motor Generator No. 1
MG2	Motor Generator No. 2
MP	Multipurpose

Abbreviations	Meaning
MPI	Multipoint Electronic Injection
MPX	Multiplex Communication System
M/T, MTM	Manual Transmission (Transaxle)
MT	Mount
MTG	Mounting
N	Neutral
NA	Natural Aspiration
NO.	Number
O2S	Oxygen Sensor
O/D	Overdrive
OEM	Original Equipment Manufacturing
OHC	Overhead Camshaft
OHV	Overhead Valve
OPT	Option
ORVR	On-board Refilling Vapor Recovery
O/S	Oversize
P & BV	Proportioning and Bypass Valve
PBD	Power Back Door
PCS	Power Control System
PCV	Positive Crankcase Ventilation
PKB	Parking Brake
PPS	Progressive Power Steering
PS	Power Steering
PTC	Positive Temperature Coefficient
PTO	Power Take-Off
P/W	Power Window
R & P	Rack and Pinion
RAM	Random Access Memory
R/B	Relay Block
RBS	Recirculating Ball Type Steering
R/F	Reinforcement
RFS	Rigid Front Suspension
RH	Right-Hand
RHD	Right-Hand Drive
RLY	Relay
ROM	Read Only Memory
RR	Rear
RRS	Rigid Rear Suspension
RWD	Rear-Wheel Drive
SDN	Sedan
SEN	Sensor
SICS	Starting Injection Control System
SOC	State Of Charge
SOHC	Single Overhead Camshaft
SPEC	Specification
SPI	Single Point Injection
SRS	Supplemental Restraint System
SSM	Special Service Materials
SST	Special Service Tools

Abbreviations	Meaning
STD	Standard
STJ	Cold-Start Fuel Injection
SW	Switch
SYS	System
T/A	Transaxle
TACH	Tachometer
TBI	Throttle Body Electronic Fuel Injection
TC	Turbocharger
TCCS	TOYOTA Computer-Controlled System
TCV	Timing Control Valve
TDC	Top Dead Center
TEMP.	Temperature
TEMS	TOYOTA Electronic Modulated Suspension
TFT	TOYOTA Free-Tronic
TIS	Total Information System For Vehicle Development
T/M	Transmission
TMC	TOYOTA Motor Corporation
TMMIN	PT. TOYOTA Motor Manufacturing Indonesia
TMMK	TOYOTA Motor Manufacturing Kentucky, Inc.
TMT	TOYOTA Motor Thailand Co. Ltd.
TRC	Traction Control System
TURBO	Turbocharge
TWC	Three-Way Catalyst
U/D	Underdrive
U/S	Undersize
VCV	Vacuum Control Valve
VENT	Ventilator
VIM	Vehicle Interface Module
VIN	Vehicle Identification Number
VPS	Variable Power Steering
VSC	Vehicle Stability Control
VSV	Vacuum Switching Valve
VTV	Vacuum Transmitting Valve
VVT-i	Variable Valve Timing-intelligent
W/	With
WGN	Wagon
W/H	Wire Harness
W/O	Without
1ST	First
2ND	Second
2WD	Two Wheel Drive Vehicle (4 x 2)
3RD	Third
4TH	Fourth
4WD	Four Wheel Drive Vehicle (4 x 4)
4WS	Four Wheel Steering System
5TH	Fifth

IN

GLOSSARY OF SAE AND TOYOTA TERMS

This glossary lists all SAE-J1930 terms and abbreviations used in this manual in compliance with SAE recommendations, as well as their TOYOTA equivalents.

SAE ABBREVIATIONS	SAE TERMS	TOYOTA TERMS ( )-ABBREVIATIONS
A/C	Air Conditioning	Air Conditioner
ACL	Air Cleaner	Air Cleaner, A/CL
AIR	Secondary Air Injection	Air Injection (AI)
AP	Accelerator Pedal	-
B+	Battery Positive Voltage	+B, Battery Voltage
BARO	Barometric Pressure	HAC
CAC	Charge Air Cooler	Intercooler
CARB	Carburetor	Carburetor
CFI	Continuous Fuel Injection	-
CKP	Crankshaft Position	Crank Angle
CL	Closed Loop	Closed Loop
CMP	Camshaft Position	Cam Angle
CPP	Clutch Pedal Position	-
CTOX	Continuous Trap Oxidizer	-
CTP	Closed Throttle Position	LL ON, Idle ON
DFI	Direct Fuel Injection	Direct Injection (DI./INJ)
DI	Distributor Ignition	-
DLC3	Data Link Connector 3	OBD II Diagnostic Connector
DTC	Diagnostic Trouble Code	Diagnostic Trouble Code
DTM	Diagnostic Test Mode	-
ECL	Engine Coolant Level	-
ECM	Engine Control Module	Engine Electronic Control Unit (ECU)
ECT	Engine Coolant Temperature	Coolant Temperature, Water Temperature (THW)
EEPROM	Electrically Erasable Programmable Read Only Memory	Electrically Erasable Programmable Read Only Memory (EEPROM), Erasable Programmable Read Only Memory (EPROM)
EFE	Early Fuel Evaporation	Cold Mixture Heater (CMH), Heat Control Valve (HCV)
EGR	Exhaust Gas Recirculation	Exhaust Gas Recirculation (EGR)
EI	Electronic Ignition	Distributorless Ignition (DLI)
EM	Engine Modification	Engine Modification (EM)
EPROM	Erasable Programmable Read Only Memory	Programmable Read Only Memory (PROM)
EVAP	Evaporative Emission	Evaporative Emission Control (EVAP)
FC	Fan Control	-
FEEPROM	Flash Electrically Erasable Programmable Read Only Memory	-
FEPROM	Flash Erasable Programmable Read Only Memory	-
FF	Flexible Fuel	-
FP	Fuel Pump	Fuel Pump
GEN	Generator	Alternator
GND	Ground	Ground (GND)
HO2S	Heated Oxygen Sensor	Heated Oxygen Sensor (HO_2S)
IAC	Idle Air Control	Idle Speed Control (ISC)
IAT	Intake Air Temperature	Intake or Inlet Air Temperature
ICM	Ignition Control Module	-

SAE ABBREVIATIONS	SAE TERMS	TOYOTA TERMS ( )-ABBREVIATIONS
IFI	Indirect Fuel Injection	Indirect Injection (IDL)
IFS	Inertia Fuel-Shutoff	-
ISC	Idle Speed Control	-
KS	Knock Sensor	Knock Sensor
MAF	Mass Airflow	Air Flow Meter
MAP	Manifold Absolute Pressure	Manifold Pressure Intake Vacuum
MC	Mixture Control	Electric Bleed Air Control Valve (EBCV) Mixture Control Valve (MCV) Electric Air Control Valve (EACV)
MDP	Manifold Differential Pressure	-
MFI	Multiport Fuel Injection	Electronic Fuel Injection (EFI)
MIL	Malfunction Indicator Light	Check Engine Light
MST	Manifold Surface Temperature	-
MVZ	Manifold Vacuum Zone	-
NVRAM	Non-Volatile Random Access Memory	-
O2S	Oxygen Sensor	Oxygen Sensor, O_2 Sensor (O_2S)
OBD	On-Board Diagnostic	On-Board Diagnostic System (OBD)
OC	Oxidation Catalytic Converter	Oxidation Catalytic Convert (OC), CCo
OL	Open Loop	Open Loop
PAIR	Pulsed Secondary Air Injection	Air Suction (AS)
PCM	Powertrain Control Module	-
PNP	Park/Neutral Position	-
PROM	Programmable Read Only Memory	-
PSP	Power Steering Pressure	-
PTOX	Periodic Trap Oxidizer	Diesel Particulate Filter (DPF) Diesel Particulate Trap (DPT)
RAM	Random Access Memory	Random Access Memory (RAM)
RM	Relay Module	-
ROM	Read Only Memory	Read Only Memory (ROM)
RPM	Engine Speed	Engine Speed
SC	Supercharger	Supercharger
SCB	Supercharger Bypass	E-ABV
SFI	Sequential Multiport Fuel Injection	Electronic Fuel Injection (EFI), Sequential Injection
SPL	Smoke Puff Limiter	-
SRI	Service Reminder Indicator	-
SRT	System Readiness Test	-
ST	Scan Tool	-
TB	Throttle Body	Throttle Body
TBI	Throttle Body Fuel Injection	Single Point Injection Central Fuel Injection (Ci)
TC	Turbocharger	Turbocharger
TCC	Torque Converter Clutch	Torque Converter
TCM	Transmission Control Module	Transmission ECU, ECT ECU
TP	Throttle Position	Throttle Position
TR	Transmission Range	-
TVV	Thermal Vacuum Valve	Bimetallic Vacuum Switching Valve (BVSV) Thermostatic Vacuum Switching Valve (TVSV)
TWC	Three-Way Catalytic Converter	Three-Way Catalytic (TWC) Manifold Converter CC_{RO}

SAE ABBREVIATIONS	SAE TERMS	TOYOTA TERMS ( )-ABBREVIATIONS
TWC+OC	Three-Way + Oxidation Catalytic Converter	CC_R + CCo
VAF	Volume Airflow	Air Flow Meter
VR	Voltage Regulator	Voltage Regulator
VSS	Vehicle Speed Sensor	Vehicle Speed Sensor
WOT	Wide Open Throttle	Full Throttle
WU-OC	Warm Up Oxidation Catalytic Converter	-
WU-TWC	Warm Up Three-Way Catalytic Converter	-
3GR	Third Gear	-
4GR	Fourth Gear	-

LIGHTING SYSTEM

PRECAUTION

1. GENERAL PRECAUTION

(a) While using the battery during inspection, do not bring the positive and negative tester probes too close to each other as a short circuit may occur.

2. PRECAUTION FOR DISCONNECTING THE BATTERY CABLE

NOTICE:

When disconnecting the negative (-) battery terminal, initialize the following systems after the terminal is reconnected.

System Name	See procedure
Power Window Control System	IN-29
Sliding Roof System	IN-29

3. PRECAUTION FOR HEADLIGHT BULB REPLACEMENT (HALOGEN BULB)

(a) Halogen bulbs have pressurized gas inside and require special handling. They can burst if scratched or dropped. Hold the bulb only by its plastic or metal case. Don't touch the glass part of a bulb with bare hands.

4. PRECAUTION FOR HEADLIGHT BULB REPLACEMENT (HID BULB)

(a) When any defects such as deformations, crack, dent, chipping, etc. are identified on the HID headlight (especially on the light control ECU), replace it with a new one.

(b) Even if the operation of the HID system is normal, always replace damaged parts as the fail-safe function may not be operating correctly.

(c) Be careful not to scratch or drop bulbs of the HID headlight and halogen bulbs (for high beam headlights and fog lights) as they have pressurized gas inside and can be easily broken.

(d) Touching the high voltage socket of the HID headlight with the headlight dimmer switch ON could generate momentary high voltage of 20,000 V and lead to a serious injury.

(e) Never connect a tester to the high voltage socket of the HID headlight for measurement, as this may lead to a serious injury because of high voltage.

(f) When servicing the HID headlight, keep it away from water including rain, turn off the light control switch, and disconnect the battery terminal and the connector of the light control ECU in advance to avoid electric shock.

(g) When operating the HID headlight, operate it after assembling is completed and never turn on the lights without a bulb installed.

(h) Do not turn on the HID headlight using another power source except the vehicle's.

5. EXPRESSIONS OF IGNITION SWITCH

(a) The type of ignition switch used on this model differs according to the specifications of the vehicle. The expressions listed in the table below are used in this section.

Switch Type		Ignition Switch (position)	Engine Switch (condition)
Expression	Ignition Switch off	LOCK	Off
	Ignition Switch on (IG)	ON	On (IG)
	Ignition Switch on (ACC)	ACC	On (ACC)
	Engine Start	START	Start

HOW TO PROCEED WITH TROUBLESHOOTING

The intelligent tester can be used at steps 4, 5, 6, and 12.

1	VEHICLE BROUGHT TO WORKSHOP

NEXT

2	CUSTOMER PROBLEM ANALYSIS

NEXT

3	PROBLEM SYMPTOM CONFIRMATION

- SYMPTOM DOES NOT OCCUR (GO TO STEP 4)
- SYMPTOM OCCURS (GO TO STEP 5)

4	CHECK BODY MULTIPLEX COMMUNICATION SYSTEM

(a) Check for DTC outputs.

- MULTIPLEX DTC OUTPUTS (PROCEED TO "BODY MULTIPLEX COMMUNICATION SYSTEM"
- NO MULTIPLEX DTC (GO TO STEP 5)

5	DTC CHECK (OTHER THAN MULTIPLEX DTC)

- MALFUNCTION CODE (GO TO STEP 6)
- NORMAL CODE (GO TO STEP 7)

6	DTC CHART

- GO TO STEP 8

7	PROBLEM SYMPTOMS TABLE

NEXT

8	**TERMINALS OF ECU**

NEXT

9	**CIRCUIT INSPECTION**

NEXT

10	**IDENTIFICATION OF PROBLEM**

NEXT

11	**REPAIR OR REPLACE**

NEXT

12	**CONFIRMATION TEST**

NEXT

END

PARTS LOCATION

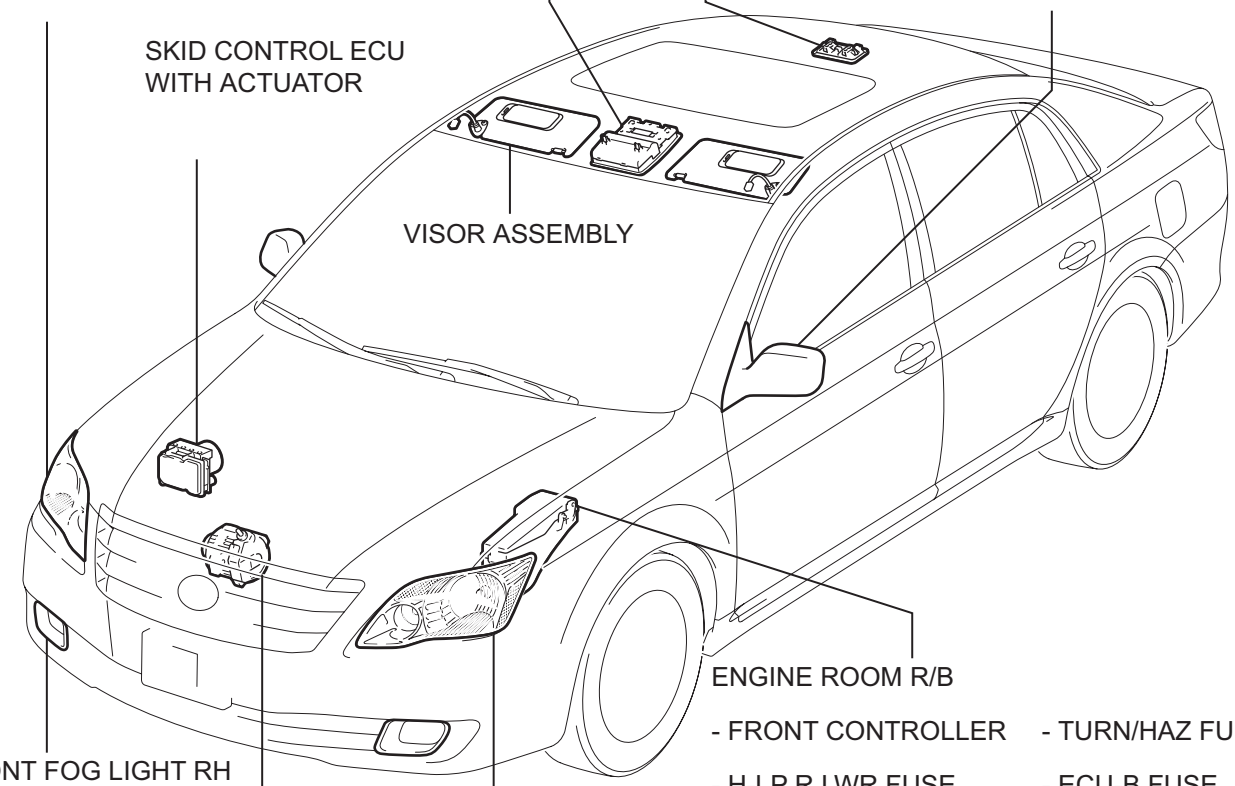

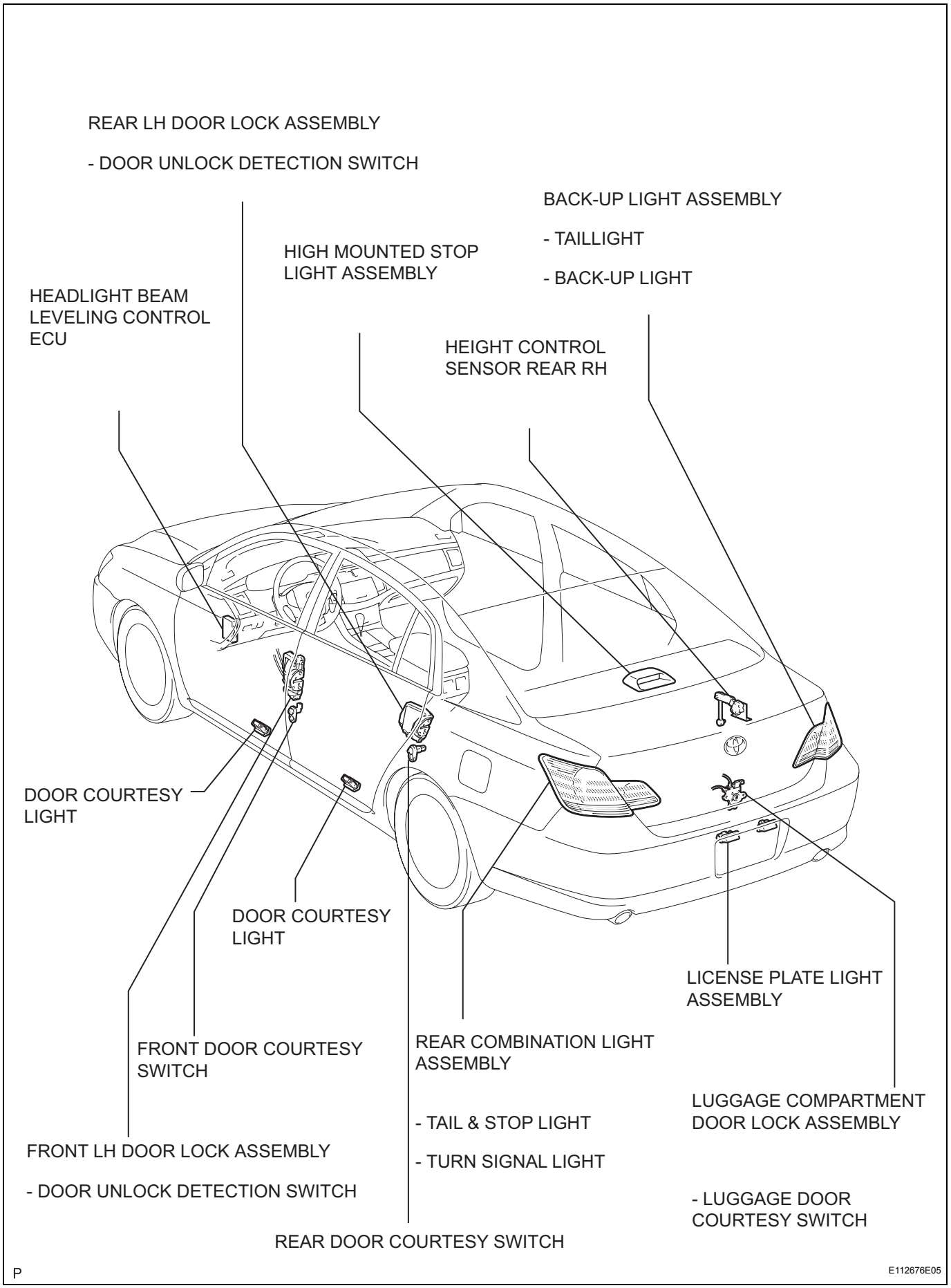
REAR LH DOOR LOCK ASSEMBLY
- DOOR UNLOCK DETECTION SWITCH
BACK-UP LIGHT ASSEMBLY
- TAILLIGHT
- BACK-UP LIGHT
HIGH MOUNTED STOP LIGHT ASSEMBLY
HEADLIGHT BEAM LEVELING CONTROL ECU
HEIGHT CONTROL SENSOR REAR RH
DOOR COURTESY LIGHT
DOOR COURTESY LIGHT
LICENSE PLATE LIGHT ASSEMBLY
FRONT DOOR COURTESY SWITCH
REAR COMBINATION LIGHT ASSEMBLY
- TAIL & STOP LIGHT
- TURN SIGNAL LIGHT
LUGGAGE COMPARTMENT DOOR LOCK ASSEMBLY
FRONT LH DOOR LOCK ASSEMBLY
- DOOR UNLOCK DETECTION SWITCH
- LUGGAGE DOOR COURTESY SWITCH
REAR DOOR COURTESY SWITCH
P
E112676E05

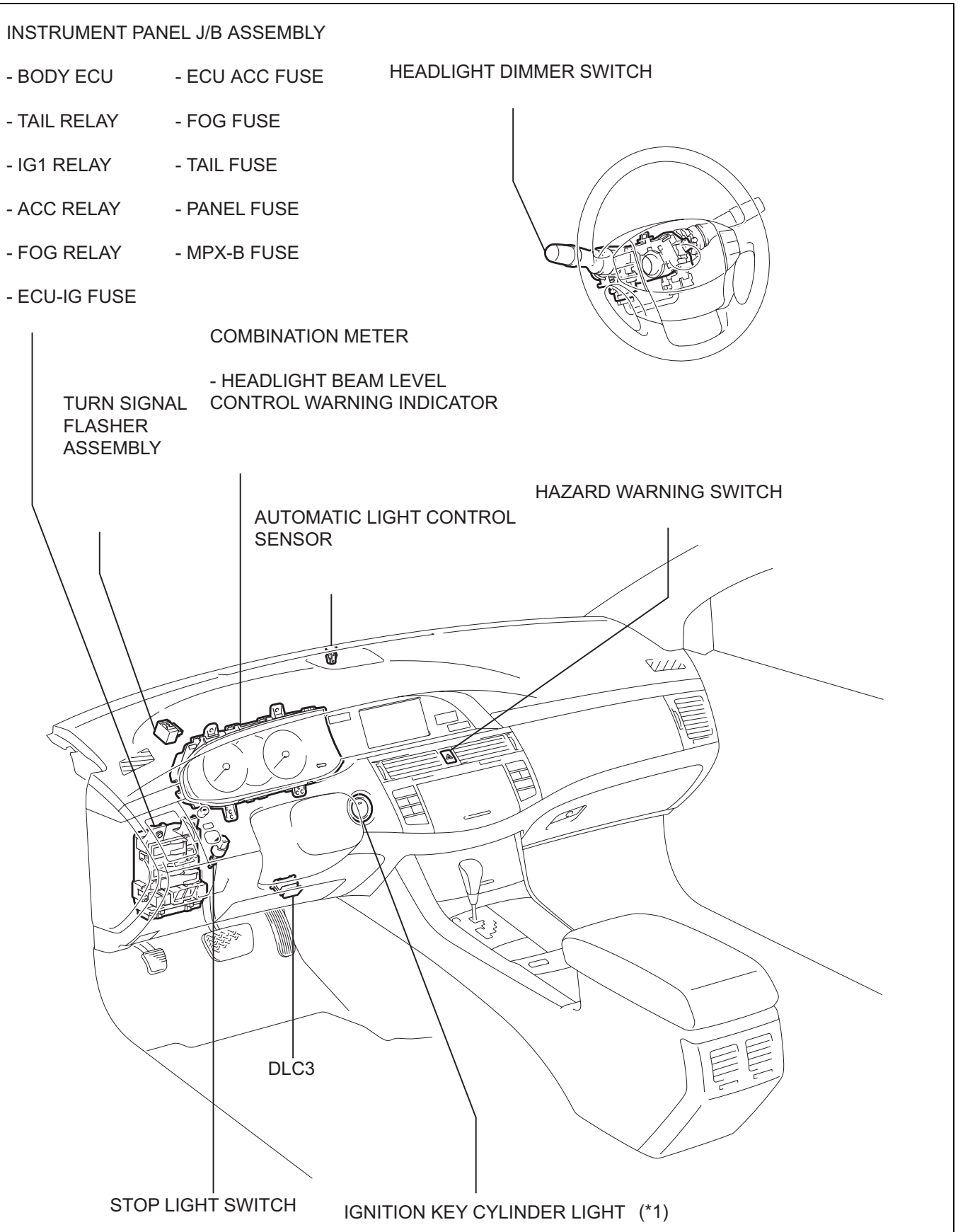

*1: WITHOUT SMART KEY SYSTEM

P

E112677E03

LI

SYSTEM DIAGRAM

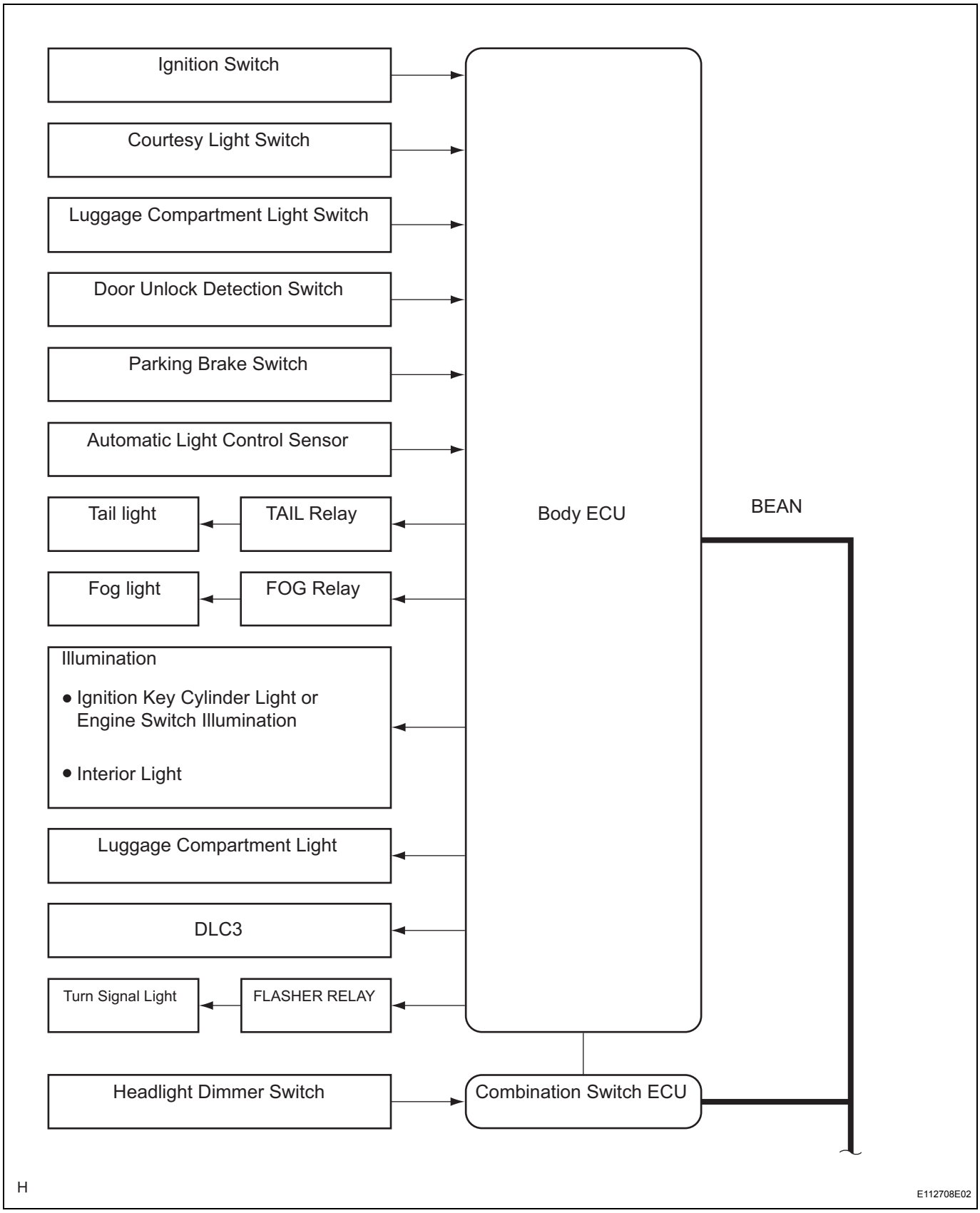

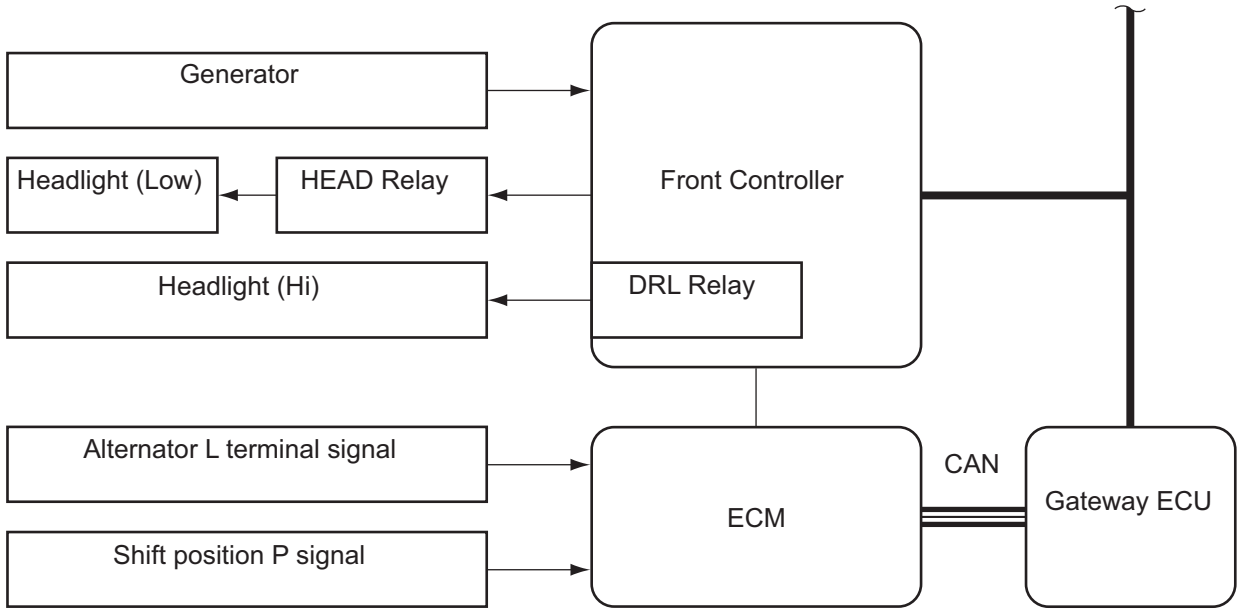

H

E112709E01

LI

Headlight Beam Level Control System:

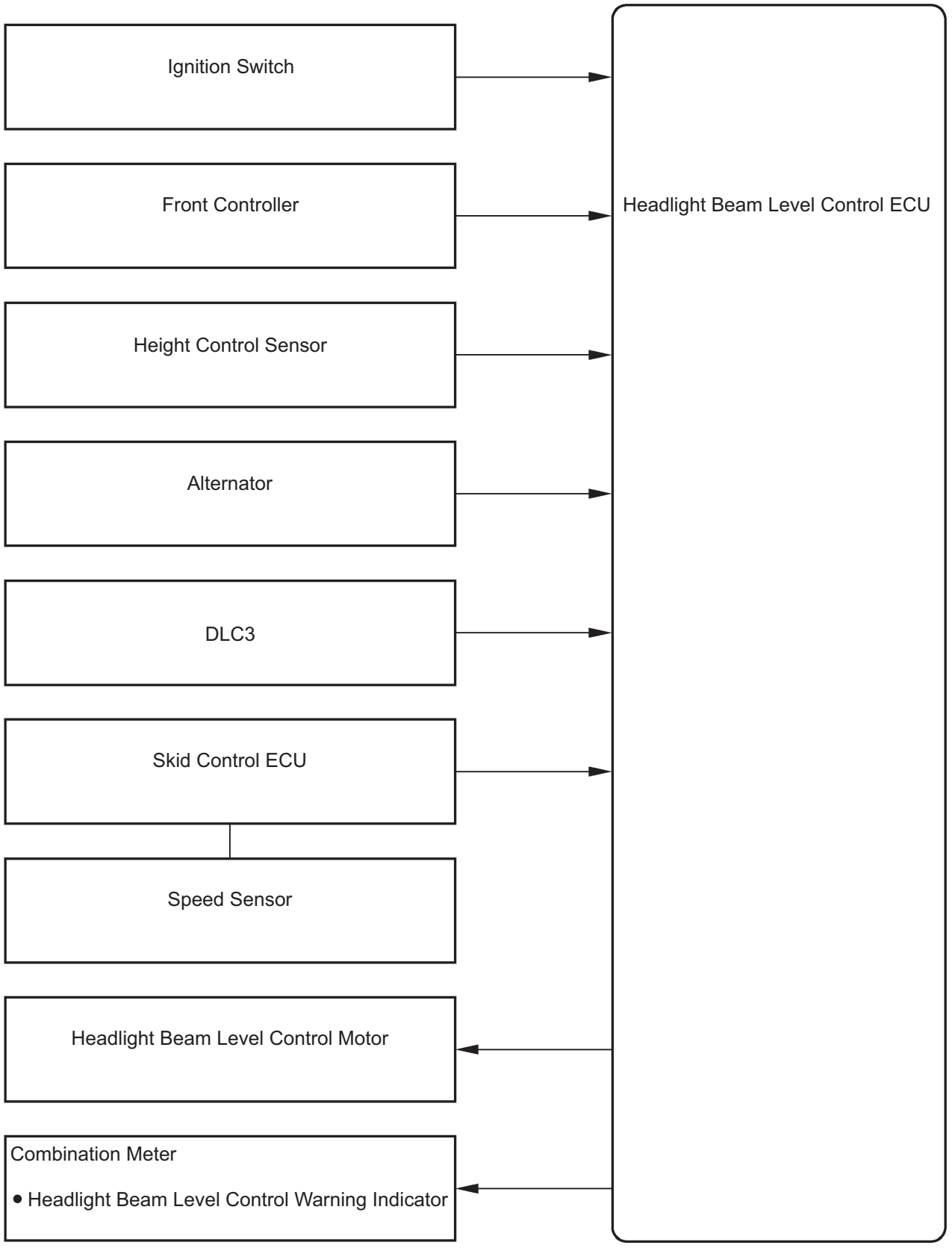

N

I041576E01

Input and output signals of each ECU

Transmitting ECU (Transmitter)	Receiving ECU	Signals	Communication method
Body ECU	Front Controller	• Headlight ON signal • High beam ON signal • DRL ON demand signal	BEAN
Combination switch ECU	Body ECU	• Light SW auto signal • Light SW tail signal • Light SW head signal • Light SW high beam signal • Front fog SW signal • Lighting system passing signal • Right turn signal • Left turn signal	BEAN
ECM	Body ECU	• Alternator L terminal signal • Shift position P signal	CAN - BEAN

SYSTEM DESCRIPTION

1. PARTS DESCRIPTION

Components	Function
Automatic light control sensor	Detects ambient light and sends the information to the body ECU.
HEAD relay	Turn the headlight on when it is actuated by the headlight ON demand signal by the front controller.
TAIL relay	Turns the tail light and illumination on when it is actuated by the tail light ON demand signal via the body ECU
Door courtesy switch	Detects the door open / close state and sends the respective information to the body ECU.
Door unlock detection switch	Detects the door lock / unlock state and sends the respective information to the body ECU.
Alternator	Detects the engine start / stop state and sends the information to the headlight beam level control ECU.
Skid control ECU	Detects the vehicle speed and sends the information to the headlight beam level control ECU.
Height control sensor	Detects the vehicle height and sends the corresponding information to the headlight beam level control ECU.
Combination meter	Sends headlight beam level warning according to the information from the headlight beam level control ECU.
Headlight beam level control motor	moves the headlight (low beam) up and down according to the information from the headlight beam level control ECU.

2. OPERATION DESCRIPTION

(a) Illumination control system (Illuminated entry system):

(1) The body ECU receives the following (A):
- Door courtesy switch signal
- Door detection switch signal
- Ignition switch signal

(2) The body ECU controls the following based on the signals listed in "A":
- Illumination operation signal

(3) The body ECU controls on / off and fade-in / fade-out operation of the following:
- Front interior light
- Ignition key cylinder light or engine switch illumination

(b) Manual light control system:
This system functions if lights such as the headlights and tail lights come on by manual operation of the light control switch.

(1) The body ECU receives the following (B):
- Light control switch signal
- Headlight dimmer switch signal
- Fog light switch signal

(2) The body ECU controls the following based on the signals listed in "B":
- Headlight ON signal
- Tail light ON signal
- High beam ON signal
- Front fog light ON signal

(c) Light auto turn off system:
When the headlights and tail lights are on through the operation of the automatic light control switch, if the ignition switch is turned off and all doors are closed, this system continues to illuminate the headlights and tail lights for approximately 30 seconds, and then turns off the headlights. However, with all the doors locked manually, using the door lock button, using the key, or pressing "LOCK" on the wireless remote will turn the headlights and tail lights of immediately.
(1) The body ECU receives the following (C):
- Door courtesy switch signal
- Ignition switch on (IG) signal

(2) The multiplex network body ECU controls the following based on the signals listed in "C" (D):
- Tail light ON signal
- Headlight ON signal
- High beam ON signal
- Fog light signal

(3) The body ECU controls the illuminating period of the following based on the signals listed in "D":
- Fog light
- Tail light

(4) The front controller receives headlight ON and the high beam ON signals from the body ECU, and then controls the illuminating period of the following based on the signal listed in "D":
- Headlight (Low)
- Headlight (Hi)

(d) Automatic light control system:
When the light control switch is in the AUTO position, the automatic light control sensor detects ambient light and automatically turns the headlights and tail light on or off accordingly.
(1) The body ECU receives the following (E):
- Light control switch signal
- Automatic light control sensor signal

(2) The body ECU controls the following based on the signals listed in "E":
- Headlight ON signal
- Tail light ON signal

(3) The body ECU controls on / off operation of the following:
- Tail light

(4) The front controller receives the headlight ON signal from the body ECU, and then controls on / off operation of the following:
- Headlight

(e) Daytime running light system:
This system is directly connected to the high-beam headlights and is designed to automatically activate the daytime running lights in order to remain highly visible to other vehicles.
(1) The body ECU receives the following (F):
- Ignition switch signal
- Generator signal
- Parking brake switch signal
- Light control switch signal

(2) The body ECU controls the following based on the signals listed in "F":
- DRL relay operation signal

(3) The front controller receives the high beam ON signal from the body ECU, and then controls on / off operation of the following:
- Headlight (Hi)

(f) Turn signal light system
(1) The body ECU receives the following (G):
- Right turn signal
- Left turn signal

(2) The body ECU controls the following based on the signals listed in "G" (H):
- Right turn ON signal
  Sent when the right turn signal or hazard warning signal is received.
- Left turn ON signal
  Sent when the left turn signal or hazard warning signal is received.

(3) The body ECU controls on / off operation of the following based on the signals listed in "H":
- Right turn signal light
- Left turn signal light

(g) Headlight beam level control system
(1) The headlight beam level control ECU receives the following (I):
- HEAD relay ON signal
- Vehicle height sensor signal
- Vehicle speed signal
- Alternator signal

(2) The headlight beam level control ECU controls the following based on the signals listed in "I" at engine start (J):
- Level control motor operation demand signal:
  Sent based on the vehicle height sensor signal and vehicle speed sensor when the HEAD relay ON signal is received.
- Headlight beam level control warning indicator light signal:
  Sent to the combination meter when the headlight beam level control ECU is malfunctioning.

(3) The headlight beam level control ECU control the following based on the signals listed in "J".
- Headlight beam level control motor
- Headlight beam level control warning indicator light

OPERATION CHECK

1. ILLUMINATED ENTRY SYSTEM OPERATION CHECK

(a) Illuminated entry system controls the following:
- Key cylinder light or engine switch illumination
- Front interior light

(b) Check that the lights come on when unlocking any of the doors that are closed and locked with the ignition switch off. Then check that the lights fade out under the following conditions:
(1) Leave the doors unlocked for 15 seconds.
(2) Turn the ignition switch on (IG) or turn the ignition switch on (ACC).
(3) Lock all the doors.

(c) Check that the lights come on when opening any of the doors that are closed with the ignition switch off. Close the door and check that the lights stay on for about 15 seconds and then go off.

(d) Check that the lights come on when turning the ignition switch from on (ACC or IG) to off. Check that the lights stay on for about 15 seconds and then go off.

2. BATTERY SAVER OPERATION CHECK

(a) Remove the ignition key and close all the doors.

(b) Open the door to turn the room light on, and leave it open. Check that the light goes off after approximately 20 minutes.

(c) After the room light goes off, close the driver's door.

(d) Open any door to turn the room light on, and then open another door. Check that the room light goes off within 20 minutes after opening the doors.

(e) Close all the doors. With the ignition key inserted, open any door to turn the room light on, and then remove the ignition key. Check that the room light goes off within 20 minutes.

3. LIGHT AUTO TURN OFF OPERATION CHECK

(a) Turn the ignition switch on (IG), and switch the headlights to the TAIL or HEAD position.

(b) Turn the ignition switch off and open the driver's door, and check that the headlights go off after approximately 30 seconds.

(c) Turn the ignition switch on (IG), and switch the headlights to the TAIL or HEAD position.

(d) Turn the ignition switch off and open the driver's door. Before the headlight goes off after approximately 30 seconds, lock all the doors. Check that the headlights go off immediately.

4. AUTOMATIC LIGHT CONTROL OPERATION CHECK

(a) Turn the ignition switch on (IG).

(b) Turn the headlight dimmer switch to the AUTO position.

(c) Cover the automatic light control sensor and check that the tail lights and headlights come on in order.

(d) Uncover the automatic light control sensor and check that the headlights and tail lights go off in order.

5. DAYTIME RUNNING LIGHT OPERATION CHECK

(a) Check that the high beams come on when the headlight switch is off with the engine running and the parking brake released. Then check that the lights go off under the following condition:
(1) Turn the headlight dimmer switch into the TAIL or HEAD (LOW) position.
(2) Turn the ignition switch off.

6. HEADLIGHT BEAM LEVEL CONTROL OPERATION CHECK

(a) Check that the initialization (determination of the initial position) of the leveling motor is performed at engine-start.

(b) Check that the warning indicator in the combination meter assembly comes on for approximately 3 seconds when turning the ignition switch on (IG) and then goes off.

(c) Check that the projector moves when:
Moving the rear of the vehicle up or down while the engine is running, vehicle is stopped, and the headlight dimmer switch is in the HEAD position.
NOTICE:
Make sure to change the vehicle's height slowly.

Headlight Beam Level Control System



C I041574E01

CUSTOMIZE PARAMETERS

HINT:
The following items are possible to customize.
NOTICE:

- **After confirming whether the items of the customer's request is applicable or not for the customized items, perform the customize operation.**
- **Be sure to record the current value before customizing.**
- **In case of performing the troubleshooting, pay attention as there is a possibility that a function is OFF by customizing. (Example: In case of the symptom in which "The wireless operation does not function", check that the wireless operation is not OFF by customizing, then perform the troubleshooting.)**

ILLUMINATED ENTRY

DISPLAY (ITEM)	DEFAULT	CONTENTS	SETTING
LIGHTING TIME (Lighting Time)	15 s	To change the lighting time after closing the door. (It will quickly fade out in case of turning the ignition on (IG).)	7.5 s / 15 s / 30 s
ILLUMI SYSTEM (Operation of illumination)	ON	Function to turn on the step light, center console light and door inside handle light when one of the following occurs; the ignition turned on (IG), door unlock or door open.	ON / OFF
LIGHT CONTROL (Light control)	ON	Function to turn on the step light and door inside handle light when the ignition switch is turned on (IG) and the shift lever is not in the P position.	ON / OFF
I/L ON / UNLOCK (Interior light ON w/ door key unlock)	ON	Function to turn on the interior light*, ignition light and step light when unlocking with the door key cylinder. *: Interior light comes on when the interior light switch is in the DOOR position.	ON / OFF
I/L ON / ACC OFF (Illumination system ON with ACC OFF)	ON	Function to turn on the interior light* and door courtesy light when the ignition switch is turned from on (ACC) to off. *: Interior light comes on when the interior light switch is in the DOOR position.	ON / OFF

LIGHT CONTROL

DISPLAY (ITEM)	DEFAULT	CONTENTS	SETTING
LIGHT OFF DELAY (Light Auto OFF Delay)	30 s	Function to keep the headlight on for a certain period of time after closing all the doors when turning the ignition switch on (IG) under the condition that the light control switch is in the HEAD or AUTO position with the headlight ON.	OFF / 30 s / 60 s / 90 s
LIGHT CTRL TYPE (Control Type)	CURRENT	To change the control logic when the light control switch is in the AUTO position. Refer to the *table 1.	CURRENT / OLD
SENSITIVITY (Turn ON Luminous Intensity)	NORMAL	To adjust the sensitivity of the lighting illumination. Refer to the *illustration 1.	DARK2 / DARK1 / NORMAL / LIGHT1 / LIGHT2
DISP EX ON SEN (Display Extinction Luminous Intensity)	NORMAL	To dim the lights such as the indicator light of the combination meter, A/C indicator light, and clock. Refer to *illustration 2.	DARK2 / DARK1 / NORMAL / LIGHT1 / LIGHT2
DISP EX OFF SEN (Display Extinction Release Luminous Intensity)	NORMAL	To cancel to dim the lights such as the indicator light of the combination meter, A/C indicator light, and clock. Refer to *illustration 3.	DARK2 / DARK1 / NORMAL / LIGHT1 / LIGHT2

HINT:
Sensitivity adjustment is dependent on the owner's preference. Actual driving by the owner is required.

Table 1

	Brightness of the surrounding when lighting	**Lighting delay**	**Delay of turning light off**	****2**
OLD	Old logic	6 sec.	6 sec.	3 sec.
CURRENT	New logic**1 ('97/8)	15 sec.	15 sec.	15 sec.

**1: The new system has the ability to light up two times brighter than the old system.
**2: Delay time until the headlight is turned on when the outside suddenly gets dark.

Illustration 1

Lighting brightness	**Dark** ⟷ **Bright**
Setting	DARK2 — DARK1 — NORMAL — LIGHT1 — LIGHT2

LI

Illustration 2

Brightness when dimming the lights	**Dark** ⟷ **Bright**
Setting	DARK2 — DARK1 — NORMAL — LIGHT1 — LIGHT2

Illustration 3

Brightness when canceling to dim the lights	Dark ⟷ **Bright**
Setting	DARK2 — DARK1 — NORMAL — LIGHT1 — LIGHT2

H

B113759E03

INITIALIZATION

1. HEIGHT CONTROL SENSOR SIGNAL INITIALIZATION

NOTICE:

- **Initialize the headlight beam level control ECU when vehicle height changes due to replacement of the suspension, headlight beam level control ECU, or removal, installation, or replacement of the height control sensor.**
- **Adjust the headlight aim after initializing the headlight beam level control ECU (See page LI-114).**

1	CHECK VEHICLE CONDITION

(a) Leave approximately 10 liters of fuel in the tank.
(b) Unload the vehicle.
(c) Check that there are no passengers in the vehicle.
(d) Turn off the headlights.

NEXT

2	CHECK WARNING INDICATOR

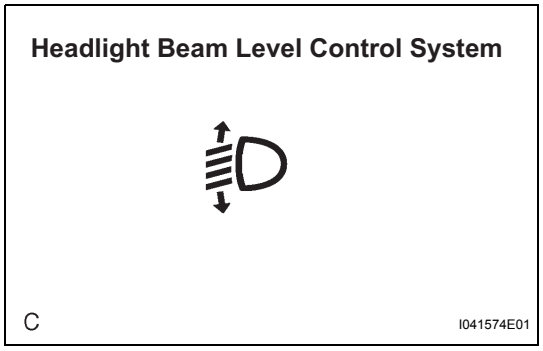

(a) Turn the ignition switch on (IG) and check the warning indicator (bulb check function).

OK:

Warning indicator comes on for approximately 3 seconds.

HINT:

- If the headlight beam level control ECU is replaced with a new one or there is problem with initialized data memorized in the headlight beam level control ECU, the warning indicator repeats the following pattern: 2 Hz for one second, followed by a 1 second pause.
- If the warning indicator does not come on or comes on for more than 3 seconds, inspect and repair according to "PROBLEM SYMPTOMS TABLE" (See page LI-18).

NEXT

3	INITIALIZATION

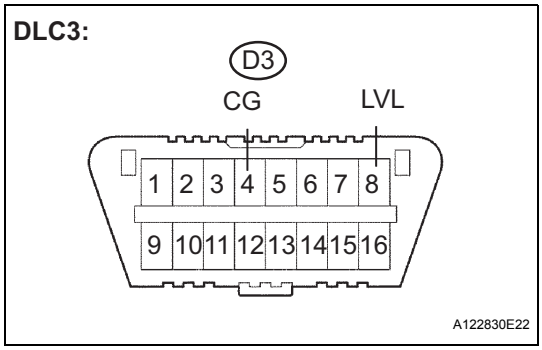

(a) Connect terminals 4 (CG) and 8 (LVL) of the DLC3 using the SST.

SST 09843-18040

(b) Flash the headlight 3 times within 20 seconds by turning the headlight dimmer switch.

NOTICE:

Flash the headlight at approximately 1 second intervals.

OK

Condition	Proceed to
Warning indicator blinks 3 times at 0.5 second intervals → goes off	A
Warning indicator does not blink or continues blinking	B

HINT:

If initialization cannot finished normally, inspect the initialization circuit (See page LI-107).

B → **INITIALIZED TERMINAL CIRCUIT IS FAULTY**

A

END (NORMAL COMPLETE)

PROBLEM SYMPTOMS TABLE

If a normal system code is displayed during the DTC check but the problem still occurs, check the circuits for each problem symptom in the order given in the table below and proceed to the relevant troubleshooting page.
HINT:
Inspect the fuse and relay before confirming the suspected area in the table below.
Inspect each malfunction circuit in numerical order for the corresponding symptom.
If the malfunction still exists even after checking and confirming that all the circuits are normal, replace the ECU.

1. HEADLIGHT AND TAIL LIGHT SYSTEM

Symptom	Suspected area	See page
"Low beam" does not come on (One side).	1. Bulb	-
	2. Headlight relay circuit	LI-40
"Low beam" does not come on (Both sides).	1. Bulb	-
	2. Combination switch ECU power source circuit	LI-102
	3. Light control switch circuit	LI-60
	4. Headlight relay circuit	LI-40
	5. Front controller	-
	6. Body ECU	-
"High beam" does not come on (One side).	1. Bulb	-
	2. Headlight (HI-BEAM) circuit	LI-43
	3. Front controller	-
"High beam" does not come on (Both sides).	1. Bulb	-
	2. Combination switch ECU power source circuit	LI-102
	3. Light control switch circuit	LI-60
	4. Headlight (HI-BEAM) circuit	LI-43
	5. Front controller	-
	6. Body ECU	-
"High beam" does not go off	1. Light control switch circuit	LI-60
	2. Headlight (HI-BEAM) circuit	LI-43
	3. Front controller	-
"Flash" does not come on. (Low beam and Hi-Beam are normal)	1. Combination switch ECU power source circuit	LI-102
	2. Light control switch circuit	LI-60
	3. Body ECU	-
Tail light does not come on (All).	1. Combination switch ECU power source circuit	LI-102
	2. Light control switch circuit	LI-60
	3. TAIL relay circuit	LI-84
	4. Body ECU	-
Only one tail light comes on.	1. Bulb	-
	2. Wire harness or connector	-
Daytime running light system does not operate.	1. Combination switch ECU power source circuit	LI-102
	2. Light control switch circuit	LI-60
	3. Generator signal circuit	LI-75
	4. Parking brake switch circuit	LI-81
	5. Ignition switch circuit	LI-34
	6. Headlight (HI-BEAM) circuit	LI-43
	7. Front controller	-
	8. Body ECU	-

2. HEADLIGHT BEAM LEVEL CONTROL SYSTEM

Symptom	Suspected area	See page
Headlight beam level control system does not operate.	1. Headlight beam level control actuator circuit	LI-99
	2. Height control sensor circuit	LI-96
	3. Headlight beam level control ECU communication circuit	LI-89
	4. Headlight beam level control ECU power source circuit	LI-93
	5. Headlight beam level control ECU	LI-160
Headlight beam warning light comes on. (Headlight beam level control system is normal)	1. Headlight beam level warning circuit	LI-105
	2. Combination meter assembly	-
	3. Headlight beam level control ECU	LI-160
Headlight beam warning light does not come on. (Headlight beam level control system is normal)	1. Headlight beam level warning circuit	LI-105
	2. Combination meter assembly	-
	3. Headlight beam level control ECU	LI-160

3. AUTOMATIC LIGHT CONTROL SYSTEM

Symptom	Suspected area	See page
Automatic light control system does not operate.	1. Combination switch ECU power source circuit	LI-102
	2. Light control switch circuit	LI-60
	3. Ignition switch circuit	LI-34
	4. Automatic light control sensor circuit	LI-32
	5. Body ECU	-

4. LIGHT AUTO TURN OFF SYSTEM

Symptom	Suspected area	See page
Light auto turn off system does not operate.	1. Combination switch ECU power source circuit	LI-102
	2. Light control switch circuit	LI-60
	3. Ignition switch circuit	LI-34
	4. Door courtesy switch circuit	LI-65
	5. Front controller	-
	6. Body ECU	-

5. FOG LIGHT SYSTEM

Symptom	Suspected area	See page
Front fog light does not come on with the light control switch in TAIL or HEAD position (TAIL and HEAD are normal).	1. Combination switch ECU power source circuit	LI-102
	2. Light control switch circuit	LI-60
	3. Front fog light circuit	LI-46
	4. Body ECU	-
Only one front fog light does not come on.	1. Bulb	-
	2. Wire harness or connector	-

6. TURN SIGNAL AND HAZARD WARNING SYSTEM

Symptom	Suspected area	See page
Hazard warning light does not come on (Turn is normal).	1. Hazard warning switch circuit	LI-58
	2. Turn signal flasher assembly	LI-161
Turn signal light does not come on.	1. Light control switch circuit	LI-60
	2. Turn signal light circuit	LI-53
	3. Body ECU	-
Only one bulb does not come on.	1. Bulb	-
	2. Turn signal light circuit	LI-53

7. STOP LIGHT SYSTEM

Symptom	Suspected area	See page
Stop light does not operate (All).	1. Bulb	-
	2. Stop light switch	LI-151
	3. Wire harness or connector	-
Only one stop light does not come on.	1. Bulb	-
	2. Wire harness or connector	-

8. ILLUMINATED ENTRY SYSTEM

Symptom	Suspected area	See page
Illuminated entry of Multiplex network body ECU control does not operate (All).	1. Ignition switch circuit	LI-34
	2. Door lock position circuit	LI-69
	3. Door courtesy switch circuit	LI-65
	4. Illumination circuit	LI-77
	5. Body ECU	-

9. OTHERS

Symptom	Suspected area	See page
Vanity light does not come on.	1. Bulb	-
	2. Wire harness or connector	-
Back up light does not come on.	1. Bulb	-
	2. Park / neutral position switch	AX-126
	3. Wire harness or connector	-
Luggage compartment light does not come on.	1. Bulb	-
	2. Luggage room light circuit	LI-72
	3. Body ECU	-
Courtesy light does not come on.	1. Bulb	-
	2. Door courtesy switch circuit	LI-65
	3. Body ECU	-
Rear interior light does not come on.	1. Bulb	-
	2. Rear room light assembly	LI-141
	3. Door courtesy switch circuit	LI-65
	4. Wire harness or connector	-
	5. Body ECU	-

TERMINALS OF ECU

1. ENGINE ROOM J/B ASSEMBLY (FRONT CONTROLLER)

Front Controller:

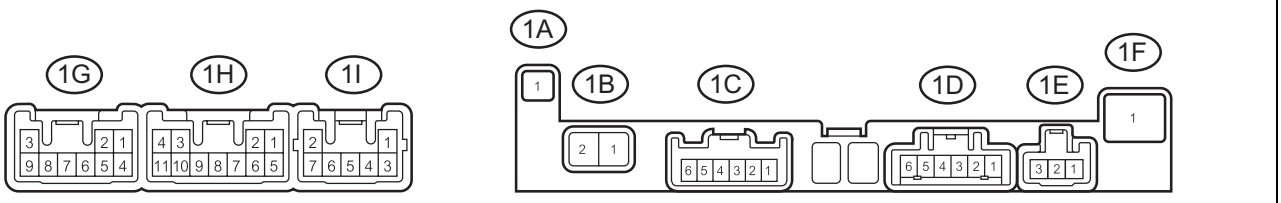

Symbols (Terminal No.)	Wiring Color	Terminal Description	Condition	Specified Condition
1A-1 - 1H-8	B - W-B	Battery (ALT fuse)	Always	10 to 14 V
1C-4 - 1H-8	BR - W-B	Hi-beam circuit (To headlight LH)	Hi-beam is ON	10 to 14 V
1C-4 - 1H-8	BR - W-B	Hi-beam circuit (To headlight LH)	Hi-beam is OFF	Below 1 V
1C-5 - 1H-8	G - W-B	Hi-beam circuit (To headlight RH)	Hi-beam is ON	10 to 14 V
1C-5 - 1H-8	G - W-B	Hi-beam circuit (To headlight RH)	Hi-beam is OFF	Below 1 V
1F-1 - 1H-8	B - W-B	Battery (Power source circuit)	Always	10 to 14 V (*1)
1F-1 - 1H-8	W - W-B	Battery (Power source circuit)	Always	10 to 14 V (*2)
1G-1 - Body ground	V - Body ground	Power source circuit	Always	10 to 14 V
1G-2 - Body ground	R - Body ground	Power source circuit	Always	10 to 14 V
1G-6 - 1H-8	LG - W-B	HEAD signal (Front light control switch)	Light control switch is HEAD	10 to 14 V
1G-6 - 1H-8	LG - W-B	HEAD signal (Front light control switch)	Light control switch isn't HEAD	Below 1 V
1G-7 - Body ground	Y - Body ground	Multiplex communication signal circuit	Ignition switch on (IG)	Signal waveform
1G-8 - Body ground	B - Body ground	Multiplex communication signal circuit	Ignition switch on (IG)	Signal waveform
1H-2 - Body ground	W-B - Body ground	Body ground	Always	Below 1 V
1H-3 - 1H-8	P - W-B	HEAD signal (To headlight)	Headlight (low) is ON	10 to 14 V
1H-3 - 1H-8	P - W-B	HEAD signal (To headlight)	Headlight (low) is OFF	Below 1 V
1H-8 - Body ground	W-B - Body ground	Body ground	Always	Below 1 V
1H-11 - 1H-8	GR - W-B	HEAD signal (To headlight leveling control ECU)	Headlight (low) is ON	Below 1 V
1H-11 - 1H-8	GR - W-B	HEAD signal (To headlight leveling control ECU)	Headlight (low) is OFF	10 to 14 V

*1: with Smart Key System
*2: without Smart Key System

2. INSTRUMENT PANEL FUNCTION BLOCK ASSEMBLY (BODY ECU)

Front Side:

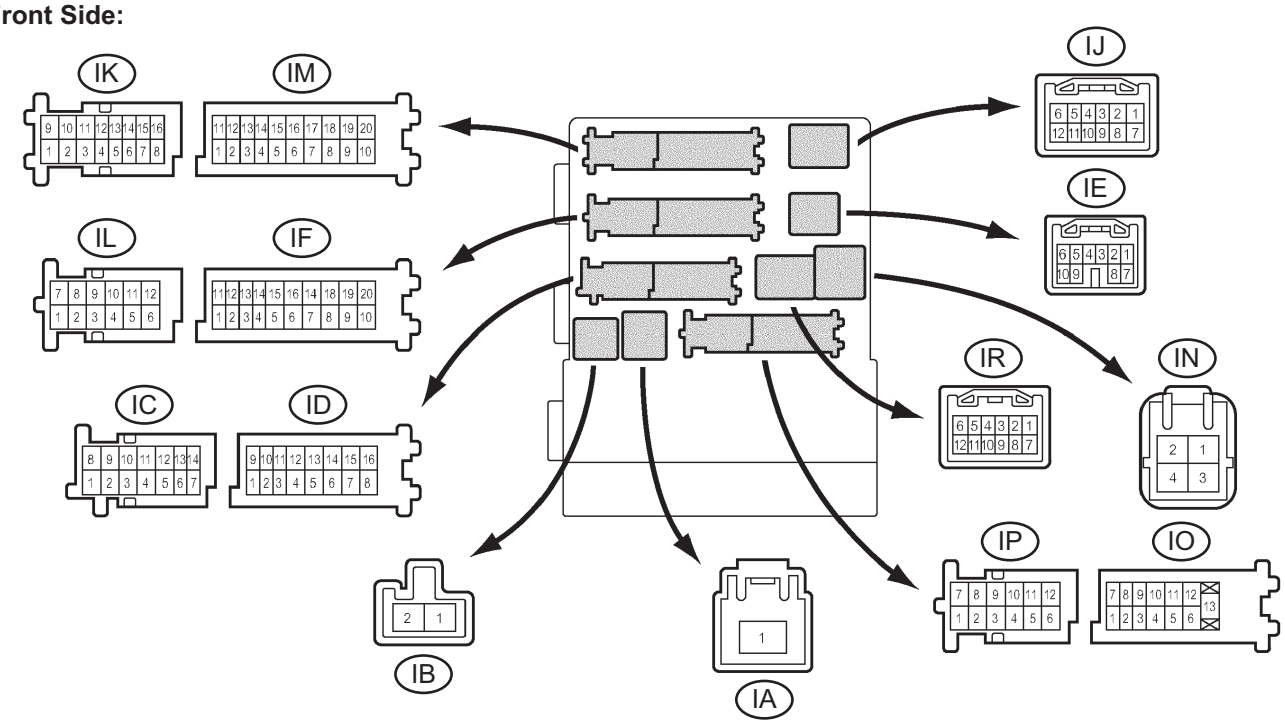

Back Side:

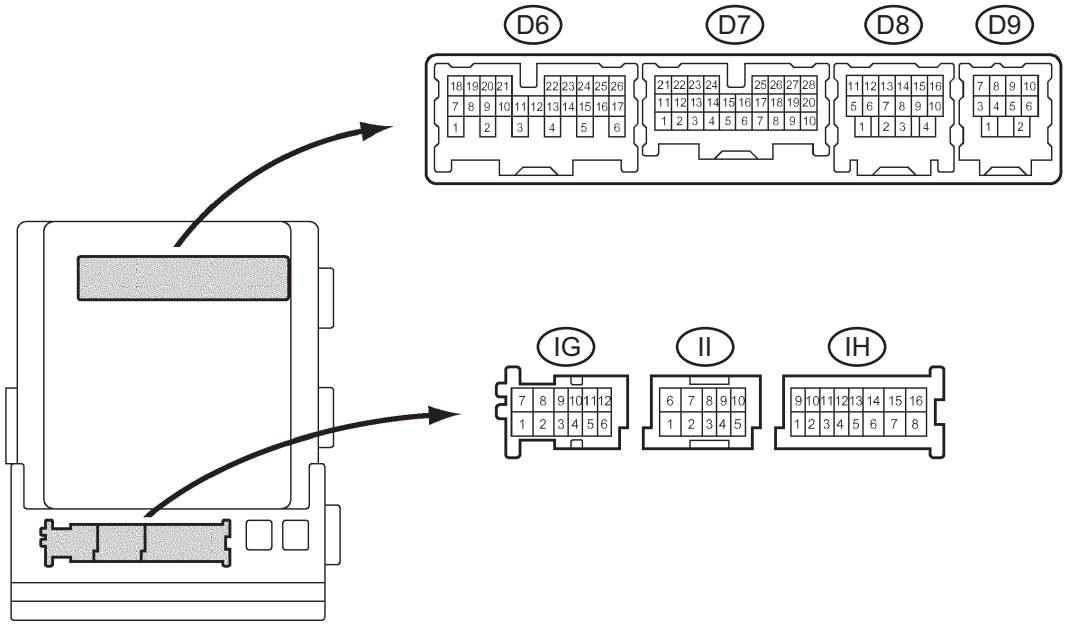

E111961E03

Symbols (Terminal No.)	Wiring Color	Terminal Description	Condition	Specified Condition
BATB (IA-1) - GND1 (IF-10)	B - W-B	Battery (Power source circuit)	Always	10 to 14 V
PKB (IC-14) - GND1 (IF-10)	LG - W-B	Parking brake switch	Parking brake is depressed	Below 1 V
PKB (IC-14) - GND1 (IF-10)	LG - W-B	Parking brake switch	Parking brake is released	10 to 14 V
BECU (ID-10) - GND1 (IF-10)	O - W-B	Battery (B+ circuit)	Always	10 to 14 V

Symbols (Terminal No.)	Wiring Color	Terminal Description	Condition	Specified Condition
ALTB (ID-16) - GND1 (IF-10)	W - W-B	Battery (ALT fuse)	Always	10 to 14 V
GND1 (IF-10) - Body ground	W-B - Body ground	Body ground	Always	Below 1 V
TRNR (II-5) - GND1 (IF-10)	L - W-B	RH side turn signal (To turn signal flasher assembly)	Ignition switch on (IG) and turn signal switch (right turn) OFF	10 to 14 V
TRNR (II-5) - GND1 (IF-10)	L - W-B	RH side turn signal (To turn signal flasher assembly)	Ignition switch on (IG) and turn signal switch (right turn) ON	Below 1 V
ILE (II-10) - GND1 (IF-10)	BR (*1) - W-B	Key cylinder light (Illumination signal)	Ignition key cylinder light is OFF	10 to 14 V
ILE (II-10) - GND1 (IF-10)	BR (*1) - W-B	Key cylinder light (Illumination signal)	Ignition key cylinder light is ON	Below 1 V
TRLY (IL-3) - GND1 (IF-10)	L (*2) - W-B	TAIL relay (TAIL signal)	Light control switch is OFF	Below 1 V
TRLY (IL-3) - GND1 (IF-10)	L (*2) - W-B	TAIL relay (TAIL signal)	Light control switch is TAIL and fog light switch is ON	10 to 14 V
GND2 (IM-9) - GND1 (IF-10)	W-B - W-B	Body ground	Always	Below 1 Ω
LCTY (IO-7) - GND1 (IF-10)	B - W-B	Courtesy switch (Rear left door circuit)	Rear left door is open	Below 1 V
LCTY (IO-7) - GND1 (IF-10)	B - W-B	Courtesy switch (Rear left door circuit)	Rear left door is closed	Pulse generation (See waveform 1)
LSWL (IP-5) - GND1 (IF-10)	GR - W-B	Door lock position switch (Rear left door circuit)	Rear left door is in the unlock position	Below 1 V
LSWL (IP-5) - GND1 (IF-10)	GR - W-B	Door lock position switch (Rear left door circuit)	Rear left door is in the lock position	Pulse generation (See waveform 1)
ILE (IR-5) - GND1 (IF-10)	BR - W-B	Front interior illumination (Illumination signal)	Front interior light is OFF	10 to 14 V
ILE (IR-5) - GND1 (IF-10)	BR - W-B	Front interior illumination (Illumination signal)	Front interior light is ON	Below 1 V
MPX1 (IR-9) - GND1 (IF-10)	B - W-B	Multiplex communication signal	Ignition switch off	Below 1 V
MPX (IR-9) - GND1 (IF-10)	B - W-B	Multiplex communication signal	Ignition switch on (IG)	Signal waveform
TRNL (D9-4) - GND1 (IF-10)	R - W-B	LH side turn signal (To turn signal flasher assembly)	Ignition switch on (IG) and turn signal switch (left turn) OFF	10 to 14 V
TRNL (D9-4) - GND1 (IF-10)	R - W-B	LH side turn signal (To turn signal flasher assembly)	Ignition switch on (IG) and turn signal switch (left turn) ON	Below 1 V
FFGO (D9-7) - GND1 (IF-10)	G (*2) - W-B	Front fog relay (Front fog circuit)	Front fog light is OFF	10 to 14 V
FFGO (D9-7) - GND1 (IF-10)	G (*2) - W-B	Front fog relay (Front fog circuit)	Front fog light is ON	Below 1 V
DCYL (D8-13) - GND1 (IF-10)	SB - W-B	Courtesy light (Front left door circuit)	Front left courtesy light is OFF	10 to 14 V
DCYL (D8-13) - GND1 (IF-10)	SB - W-B	Courtesy light (Front left door circuit)	Front left courtesy light is ON	Below 1 V
DCTY (D8-14) - GND1 (IF-10)	L - W-B	Courtesy switch (Front left door circuit)	Front left door is open	Below 1 V
DCTY (D8-14) - GND1 (IF-10)	L - W-B	Courtesy switch (Front left door circuit)	Front left door is closed	10 to 14 V
RCTY (D8-16) - GND1 (IF-10)	GR - W-B	Courtesy switch (Rear right door circuit)	Rear right door is open	Below 1 V
RCTY (D8-16) - GND1 (IF-10)	GR - W-B	Courtesy switch (Rear right door circuit)	Rear right door is closed	Pulse generation (See waveform 1)

Symbols (Terminal No.)	Wiring Color	Terminal Description	Condition	Specified Condition
HAZ (D7-2) - GND1 (IF-10)	P - W-B	HAZARD signal (Front hazard switch)	Hazard switch is OFF	10 to 14 V
HAZ (D7-2) - GND1 (IF-10)	P - W-B	HAZARD signal (Front hazard switch)	Hazard switch is ON	Below 1 V
CLTE (D7-4) - GND1 (IF-10)	W - W-B	Automatic light control sensor (Ground circuit)	Always	Below 1 V
CLTS (D7-5) - GND1 (IF-10)	LG - W-B	Automatic light control sensor (Signal circuit)	Ignition switch on (IG)	Below 1 V
CLTS (D7-5) - GND1 (IF-10)	LG - W-B	Automatic light control sensor (Signal circuit)	Ignition switch off	10 to 14 V
CLTB (D7-6) - GND1 (IF-10)	BR - W-B	Automatic light control sensor (Power source circuit)	Ignition switch off	10 to 14 V
CLTB (D7-6) - GND1 (IF-10)	BR - W-B	Automatic light control sensor (Power source circuit)	Ignition switch on (IG)	Below 1 V
LSWR (D6-5) - GND1 (IF-10)	B - W-B	Door lock position switch (Rear right door circuit)	Rear right door is in the unlock position	Below 1 V
LSWR (D6-5) - GND1 (IF-10)	B - W-B	Door lock position switch (Rear right door circuit)	Rear right door is in the lock position	Pulse generation (See waveform 1)
CSPT (D6-14) - GND1 (IF-10)	LG (*3) - W-B	Overhead illumination circuit	Overhead console illumination is OFF	10 to 14 V
CSPT (D6-14) - GND1 (IF-10)	LG (*3) - W-B	Overhead illumination circuit	Overhead console illumination is ON	Below 1 V
MPX2 (D6-21) - GND1 (IF-10)	BR - W-B	Multiplex communication signal	Ignition switch off	Below 1 V
MPX2 (D6-21) - GND1 (IF-10)	BR - W-B	Multiplex communication signal	Ignition switch on (IG)	Signal waveform
PCTY (D6-23) - GND1 (IF-10)	L - W-B	Courtesy switch (Front right door circuit)	Front right door is open	Below 1 V
PCTY (D6-23) - GND1 (IF-10)	L - W-B	Courtesy switch (Front right door circuit)	Front right door is closed	10 to 14 V
PCYL (D6-24) - GND1 (IF-10)	O - W-B	Courtesy light (Front right door circuit)	Front right courtesy light is OFF	10 to 14 V
PCYL (D6-24) - GND1 (IF-10)	O - W-B	Courtesy light (Front right door circuit)	Front right courtesy light is ON	Below 1 V
LGCY (D6-25) - GND1 (IF-10)	V - W-B	Courtesy switch (Back door circuit)	Back door is open	Below 1 V
LGCY (D6-25) - GND1 (IF-10)	V - W-B	Courtesy switch (Back door circuit)	Back door is closed	10 to 14 V
LSWP (D6-27) - GND1 (IF-10)	GR - W-B	Door lock position switch (Front right door circuit)	Front right door is in the unlock position	Below 1 V
LSWP (D6-27) - GND1 (IF-10)	GR - W-B	Door lock position switch (Front right door circuit)	Front right door is in the lock position	10 to 14 V

*1: without Smart Key System
*2: with Front Fog Light
*3: with Sliding Roof

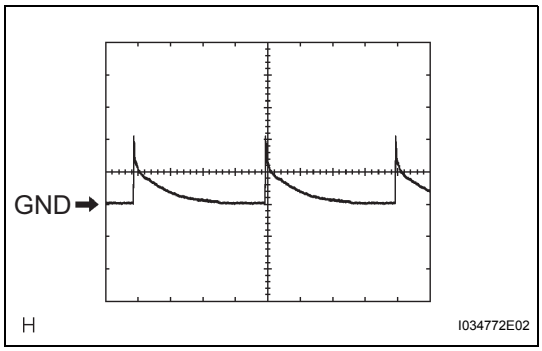

(a) Waveform 1
HINT:
- Gauge set:
  5 V/DIV. 5 ms/DIV.
- Condition:
  Ignition switch on (IG)

3. COMBINATION SWITCH ECU (WINDSHIELD WIPER SWITCH ASSEMBLY)

Combination Switch ECU:

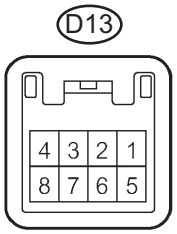

Symbols (Terminal No.)	Wiring Color	Terminal Description	Condition	Specified Condition
B (D13-1) - E (D13-5)	W - W-B	Power source circuit (Front battery)	Always	10 to 14 V
IG (D13-2) - E (D13-5)	L - W-B	Ignition switch signal circuit (From ignition switch)	Ignition switch off	Below 1 V
IG (D13-2) - E (D13-5)	L - W-B	Ignition switch signal circuit (From ignition switch)	Ignition switch on (IG)	10 to 14 V
HEAD (D13-4) - Body ground	LG - Body ground	Light control switch HEAD signal	Light control switch is not HEAD	10 to 14 V
HEAD (D13-4) - Body ground	LG - Body ground	Light control switch HEAD signal	Light control switch is HEAD	Below 1 V
E (D13-5) - Body ground	W-B - Body ground	Ground	Always	Below 1 V
MPX1 (D13-6) - Body ground	BR - Body ground	Multiplex communication signal circuit	Ignition switch on (IG)	Signal waveform
MPX2 (D13-7) - Body ground	R - Body ground	Multiplex communication signal circuit	Ignition switch on (IG)	Signal waveform (*1)
MPX2 (D13-7) - Body ground	B - Body ground	Multiplex communication signal circuit	Ignition switch on (IG)	Signal waveform (*2)

*1: with Smart Key System
*2: without Smart Key System

4. HEADLIGHT BEAM LEVEL CONTROL ECU

Headlight Beam Level Control ECU:

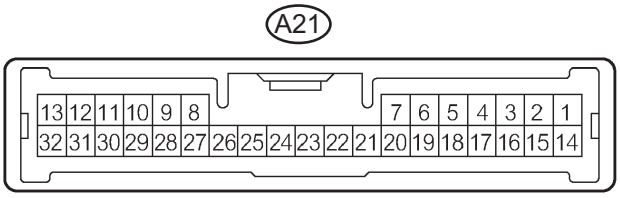

Symbols (Terminal No.)	Wiring Color	Terminal Description	Condition	Specified Condition
E1 (A21-1) - Body ground	W-B - Body ground	Ground	Always	Below 1 V
SPDL (A21-5) - E1 (A21-1)	Y - W-B	Vehicle speed signal (From the skid control ECU)	Vehicle is driven at approx. 30 km/h (19 mph)	Pulse generation (See waveform 1)
SPDR (A21-6) - E1 (A21-1)	R - W-B	Vehicle speed signal (From the skid control ECU)	Vehicle is driven at approx. 30 km/h (19 mph)	Pulse generation (See waveform 1)
B2 (A21-7) - E1 (A21-1)	GR - W-B	HEAD relay operation signal	HEAD relay is ON	Below 1 V
B2 (A21-7) - E1 (A21-1)	GR - W-B	HEAD relay operation signal	HEAD relay is OFF	10 to 14 V
CHG- (A21-8) - E1 (A21-1)	L - W-B	Generator signal circuit	Engine is running	10 to 14 V
CHG- (A21-8) - E1 (A21-1)	L - W-B	Generator signal circuit	Engine is stopped	Below 1 V
LR2+ (A21-10) - LR2- (A21-9)	LG - W	Headlight beam level control motor RH (Operation signal circuit)	Ignition switch off	Below 1 V
LR2+ (A21-10) - LR2- (A21-9)	LG - W	Headlight beam level control motor RH (Operation signal circuit)	Engine is running, change vehicle height and keep it fro more than 1 second.	Pulse generation (See waveform 2)
LR1+ (A21-12) - LR1- (A21-11)	B - BR	Headlight beam level control motor RH (Operation signal circuit)	Ignition switch off	Below 1 V
LR1+ (A21-12) - LR1- (A21-11)	B - BR	Headlight beam level control motor RH (Operation signal circuit)	Engine is running, change vehicle height and keep it fro more than 1 second.	Pulse generation (See waveform 2)
IG (A21-14) - E1 (A21-1)	G - W-B	Power source circuit (From engine switch (IG))	Ignition switch off	Below 1 V
IG (A21-14) - E1 (A21-1)	G - W-B	Power source circuit (From engine switch (IG))	Ignition switch on (IG)	10 to 14 V
SGR (A21-17) - E1 (A21-1)	V - W-B	Height control sensor (Ground circuit)	Always	Below 1 V
INIT (A21-18) - E1 (A21-1)	W - W-B	Initialize signal input terminal	Ignition switch off	Below 1 V
INIT (A21-18) - E1 (A21-1)	W - W-B	Initialize signal input terminal	Ignition switch on (IG)	Approx. 5.0 V
SHRL (A21-19) - E1 (A21-1)	L - W-B	Height control sensor (Signal circuit)	Ignition switch off	Below 1 V
SHRL (A21-19) - E1 (A21-1)	L - W-B	Height control sensor (Signal circuit)	Ignition switch on (IG)	0.5 to 4.5 V
SBR (A21-21) - E1 (A21-1)	B - W-B	Height control sensor (Power source circuit)	Ignition switch off	Below 1 V
SBR (A21-21) - E1 (A21-1)	B - W-B	Height control sensor (Power source circuit)	Ignition switch on (IG)	Approx. 5.0 V
WNG (A21-26) - E1 (A21-1)	V - W-B	Headlight beam level warning indicator signal (To combination meter)	Headlight beam level warning indicator comes on	Below 1 V
WNG (A21-26) - E1 (A21-1)	V - W-B	Headlight beam level warning indicator signal (To combination meter)	Headlight beam level warning indicator goes off	10 to 14 V
LL2+ (A21-29) - LL2- (A21-28)	GR - R	Headlight beam level control motor LH (Operation signal circuit)	Ignition switch off	Below 1 V
LL2+ (A21-29) - LL2- (A21-28)	GR - R	Headlight beam level control motor LH (Operation signal circuit)	With the ignition switch on (IG), change vehicle height and keep it for more than 1 second.	Pulse generation (See waveform 2)
LL1+ (A21-31) - LL1- (A21-30)	L-B - O	Headlight beam level control motor LH (Operation signal circuit)	Ignition switch off	Below 1 V

Symbols (Terminal No.)	Wiring Color	Terminal Description	Condition	Specified Condition
LL1+ (A21-31) - LL1- (A21-30)	L-B - O	Headlight beam level control motor LH (Operation signal circuit)	With the ignition switch on (IG), change vehicle height and keep it for more than 1 second.	Pulse generation (See waveform 2)

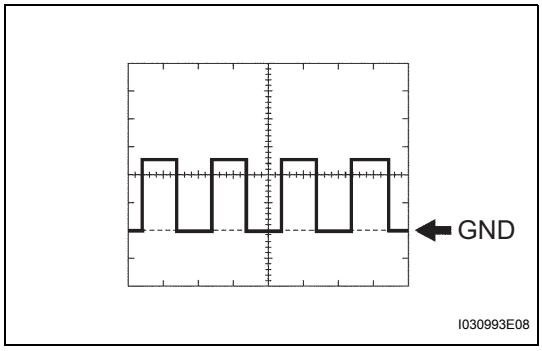

(a) Waveform 1
HINT:
- Terminal:
  SPDR - GND
  SPDR - GND
- Gauge set:
  5 V/DIV. 2 ms/DIV.
- Condition:
  Vehicle is driven at approximately 30 km/h (19 mph).

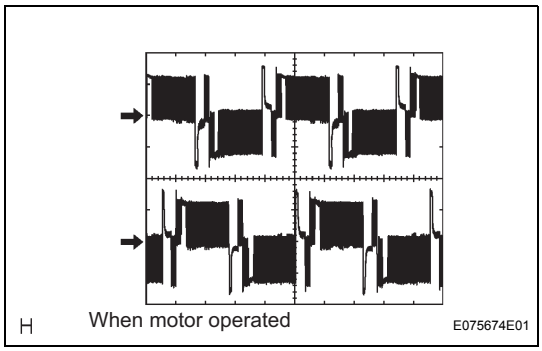

(b) Waveform 2
HINT:
- Terminal:
  LL1+ - LL1-
  LL2+ - LL2-
  LR1+ - LR1-
  LR2+ - LR2-
- Gauge set:
  10 V/DIV. 5 ms/DIV.
- Condition:
  The light control switch is in the HEAD position when the vehicle is standing still or bouncing.

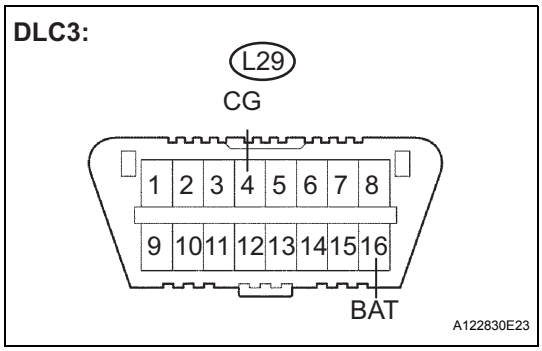

DIAGNOSIS SYSTEM

1. CHECK DLC3

(a) Inspect the battery voltage.
Voltage:
12 to 14 V
If the voltage is below 12 V, recharge the battery before proceeding.

(b) Check the DLC3.
The terminal arrangement of the DLC3 complies with SAE J1962 and matches the ISO 9141-2 format.

Standard voltage

Symbols (Terminal No.)	Terminal Description	Condition	Specified Condition
BAT (16) - Body ground	Battery positive	Always	10 to 14 V

Standard resistance

Symbols (Terminal No.)	Terminal Description	Condition	Specified Condition
CG (4) - Body ground	Chassis ground	Always	Below 1 Ω

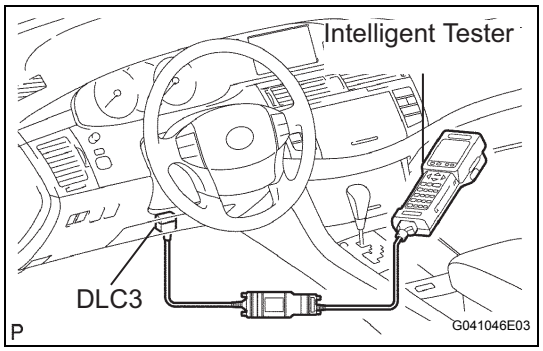

DTC CHECK / CLEAR

1. DTC CHECK

(a) Connect the intelligent tester to the DLC3.

(b) Turn the ignition switch on (IG).

(c) Read DTCs by following the prompts on the tester screen.

HINT:

Refer to the intelligent tester operator's manual for further details.

2. DTC CLEAR

(a) DTCs can be cleared by operating the intelligent tester.

HINT:

Refer to the intelligent tester operator's manual for further details.

FAIL-SAFE CHART

1. LIGHT CONTROL COMPUTER (HID)

Trouble Area	Condition
High voltage circuit open	Lighting of the headlight stops, the condition is maintained until power is turned on again (headlight dimmer switch OFF → ON).
Short between high voltage circuits	Lighting of the headlight stops within 1 second and the condition is maintained until power is turned on again (headlight dimmer switch OFF → ON).
Leakage between high voltage terminal and body ground	Lighting of the headlight stops, the condition is maintained until power is turned on again (headlight dimmer switch OFF → ON).
Low light voltage	Lighting of the headlight stops, the condition is maintained until power is turned on again (headlight dimmer switch OFF → ON).
High light voltage	Lighting of the headlight stops, the condition is maintained until power is turned on again (headlight dimmer switch OFF → ON).
Bulb flashing	• The condition is maintained more than 60 seconds. • Lighting of the headlight stops, the condition is maintained until power is turned on again (headlight dimmer switch OFF → ON).
Battery voltage high	As soon as the voltage comes within the range of operation voltage (9 to 16 V), the headlight comes on again.
Battery voltage low	Even when voltage changes from 9.5 V to 7.5 V, lighting condition is maintained. Lighting condition changes when voltage is too low (below 6 V). As soon as the voltage comes back within the range of operation voltage (more than 9 V), the headlights come on again.

2. HEADLIGHT BEAM LEVEL CONTROL ECU

HINT:

- The headlight beam level control ECU performs fail-safe when detecting the following troubles. The headlight beam level control warning indicator light on the combination meter comes on at the same time.
- If the headlight beam level control warning indicator light comes on, inspect and repair in accordance with the "PROBLEM SYMPTOMS TABLE" (See page LI-18).

Trouble area	Headlight beam level control motor	Warning indicator light	Recovery condition
Height control sensor power source	• Stops operation after returning to initial position (Fail occurs at higher than initial position) • Stops at current position (Fail occurs at lower than initial position)	Comes on	Ignition switch off
Height control sensor signal	• Stops operation after returning to initial position (Fail occurs at higher than initial position) • Stops at current position (Fail occurs at lower than initial position)	Comes on	Return to normal signals
Headlight beam level control motor	• Stops operation after returning to initial position (Fail occurs at higher than initial position) (*1) • Stops at current position (Fail occurs at lower than initial position) (*1)	Comes on	Ignition switch off
Alternator signal	Control continues	Comes on	Ignition switch off

HINT:
*1: The inoperative side stops at current position.

DATA LIST / ACTIVE TEST

1. DATA LIST

HINT:

Using the DATA LIST displayed on the intelligent tester, you can read the values of the switch, sensor, actuator, etc. without removing any parts. Reading the DATA LIST as the first step of troubleshooting is one of the methods to shorten labor time.

(a) Connect the intelligent tester to the DLC3.
(b) Turn the ignition switch on (IG).
(c) According to the display on the tester, read the "DATA LIST".

BODY ECU:

Item	Measurement Item / Display (Range)	Normal Condition	Diagnostic Note
ACC SW	ACC SW signal / ON or OFF	ON: Ignition switch on (IG) or (ACC) OFF: Ignition switch off	-
IG SW	IG SW signal / ON or OFF	ON: Ignition switch on (IG) or START OFF: Ignition switch off or Ignition switch on (ACC)	-
D DOR CTY SW	Driver's door courtesy SW signal / ON or OFF	ON: Driver's door is open OFF: Driver's door is closed	-
P DOR CYT SW	Passenger's door courtesy SW signal / ON or OFF	ON: Front passenger's door is open OFF: Front passenger's door is closed	-
Rr DOR CTY SW	Rear door courtesy SW signal / ON or OFF	ON: Either right or left rear door is open OFF: Both the right and left doors are closed	-
P LOCK POS SW	Front passenger's door lock position SW signal / ON or OFF	ON: Front passenger's door lock is in the unlock position OFF: Front passenger's door lock is in the lock position	-
Rr. LOCK POS SW	Rear door lock position SW signal / ON or OFF	ON: Rear door lock is in the unlock position OFF: Rear door lock is in the lock position	-
D LOCK POS SW	Driver's door lock position SW signal / ON or OFF	ON: Door lock is in the unlock position OFF: Door lock is in the lock position	-
ILLUMINATE RATE	Illuminate rate / (0.8 ms - 22.0 ms)	Value is output according to ambient light	-
LIGHTING TIME	Lighting time / 7.5 s, 15 s or 30 s	Customized value will be displayed	-
ILLUMI SYSTEM	Illumination system / ON or OFF	ON: Illumination operation is ON OFF: Illumination operation is OFF	-
LIGHT CONTROL	Light control / ON or OFF	ON: Light control system is ON OFF: Light control system is OFF	-
I/L ON / ACC OFF	Light the I/L when ACC OFF / ON or OFF	Customized value will be displayed	-
I/L ON / UNLOCK	Interior light ON w/ unlock / ON or OFF	Customized value will be displayed	-
LIGHT CTRL TYPE	Light control type / CURRENT or OLD	Customized value will be displayed	-
LIGHT OFF DELAY	Light auto OFF delay / OFF, 30 s, 60 s, 90 s	Customized value will be displayed	-
DRL FUNCTION	DRL function / OFF or ON	Customized value will be displayed	-
PARKING BRAKE SW	Parking brake / OFF or ON	ON: Parking brake pedal is ON OFF: Parking brake pedal is OFF	-

COMBINATION SW ECU (WINDSHIELD WIPER SWITCH ASSEMBLY):

Item	Measurement Item / Display (Range)	Normal Condition	Diagnostic Note
R FOG LIGHT SW	Rear fog light switch / ON or OFF	ON: Rear fog light switch is in the ON position OFF: Rear fog light switch is in the OFF position	-

Item	Measurement Item / Display (Range)	Normal Condition	Diagnostic Note
F FOG LIGHT SW	Front fog light switch / ON or OFF	ON: Front fog light switch is in the ON position OFF: Front fog light switch is in the OFF position	-
HIGH FLASHER SW	Passing light switch / ON or OFF	ON: Headlight dimmer switch is in the FLASH position OFF: Headlight dimmer switch is in except the FLASH position	-
DIMMER HI SW	High beam switch / ON or OFF	ON: Headlight dimmer switch is in the HI position OFF: Headlight dimmer switch is in except the HI position	-
LIGHT AUTO SW	Auto light switch / ON or OFF	ON: Light control switch is in the AUTO position OFF: Light control switch is in except the AUTO position	-
HEAD LIGHT SW	Headlight control switch / ON or OFF	ON: Light control switch is in the HEAD position OFF: Light control switch is in except the HEAD position	-
TAIL LIGHT SW	Tail light switch / ON or OFF	ON: Light control switch is in the TAIL or HEAD position OFF: Light control switch is in the OFF position	-
TURN LEFT SW	Turn signal switch LH signal / ON or OFF	ON: Turn signal switch is in the LH position OFF: Turn signal switch is in the OFF position	-
TURN LIGHT SW	Turn signal switch RH signal / ON or OFF	ON: Turn signal switch is in the RH position OFF: Turn signal switch is in except the RH position	-
IG SW SIG	Ignition switch signal / ON or OFF	ON: Ignition switch on (IG) OFF: Ignition switch off	-

BODY NO. 5 (FRONT CONTROLLER):

Item	Measurement Item / Display (Range)	Normal Condition	Diagnostic Note
ALT L SIGNAL	Alternator L terminal signal / ON or OFF	ON: Engine start OFF: Except engine start	-

2. ACTIVE TEST

HINT:

Performing the ACTIVE TEST using the intelligent tester allows the relay, VSV, actuator, etc. to operate without removing any parts. Performing the ACTIVE TEST as the first step of troubleshooting is one of the methods to shorten labor time. The DATA LIST can be displayed during the ACTIVE TEST.

(a) Connect the intelligent tester to the DLC3.
(b) Turn the ignition switch on (IG).
(c) According to the display on the tester, perform the "ACTIVE TEST".

BODY ECU:

Item	Test Details	Diagnostic Note
HAZARD	Hazard ON / OFF	-
F FOG LIGHT RLY	Front fog light relay ON / OFF	-
TRN SIG LGT R	Turn signal light RH relay operation ON / OFF	-
TRN SIG LGT L	Turn signal light LH relay operation ON / OFF	-
TAIL LIGHT	Tail light relay ON / OFF	-
DIMMER SIG	Dimmer signal ON / OFF	-
ILLUMI OUTPUT	(Test Details) Interior light and key illumination ON / OFF (Vehicle Condition) Interior light SW is in the DOOR position and all doors are closed	-
CONSOLE LIGHT	Turn the center console illumination ON / OFF	-
STEP LIGHT	Turn the step light and inside handle illumination ON / OFF	-

BODY NO. 5 (FRONT CONTROLLER):

Item	Test Details	Diagnostic Note
HEAD LIGHT (LO)	Light head (low) ON / OFF	-
HEAD LIGHT (HI)	Light head (high) ON / OFF	-
DRL OPERT	Light head (high) DRL ON / OFF	-

DIAGNOSTIC TROUBLE CODE CHART

LIGHTING SYSTEM

DTC No.	Detection Item	Trouble Area	See page
B1244	Light Sensor Circuit Malfunction	1. Automatic light control sensor 2. Wire harness or connector 3. Body ECU	LI-32

DTC	B1244	Light Sensor Circuit Malfunction

DESCRIPTION

This DTC is output when failure in the light sensor circuit is detected.

DTC No.	DTC Detecting Condition	Trouble Area
B1244	• Malfunction of the automatic light control sensor • Open or short in the automatic light control sensor circuit	• Automatic light control sensor • Wire harness or connector • Body ECU

WIRING DIAGRAM

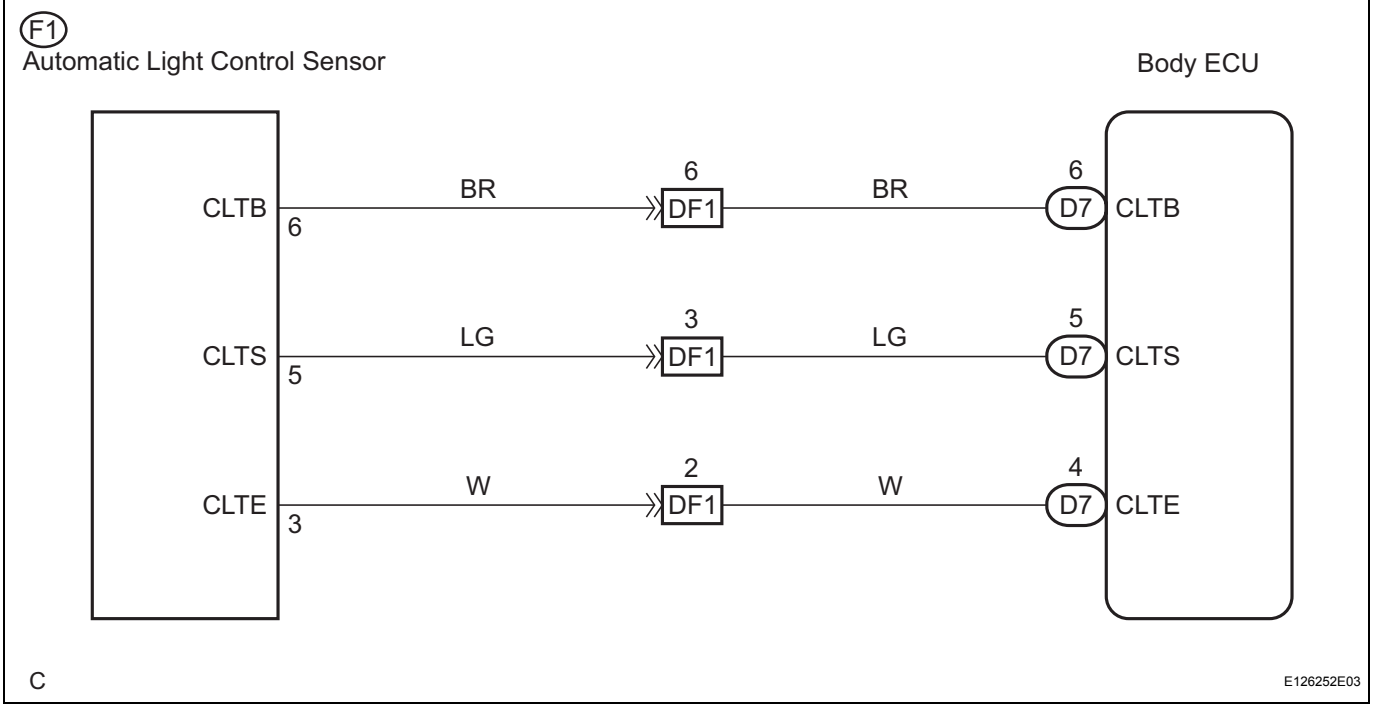

INSPECTION PROCEDURE

1	READ VALUE OF INTELLIGENT TESTER

(a) Connect the intelligent tester to the DLC3.
(b) Turn the ignition switch on (IG) and turn the intelligent tester main switch on.
(c) Select the item below in the DATA LIST, and read the displays on the intelligent tester.

BODY NO. 1 (BODY ECU):

Item	Measurement Item / Display (Range)	Normal Condition	Diagnostic Note
ILLUMINATE RATE	Illuminate rate / (0.8 ms - 22.0 ms)	Value is output according to ambient light	-

NG → **Go to step 2**

OK

REPLACE AUTOMATIC LIGHT CONTROL SENSOR

2	CHECK HARNESS AND CONNECTOR (BODY ECU - AUTOMATIC LIGHT CONTROL SENSOR)

Wire Harness View:

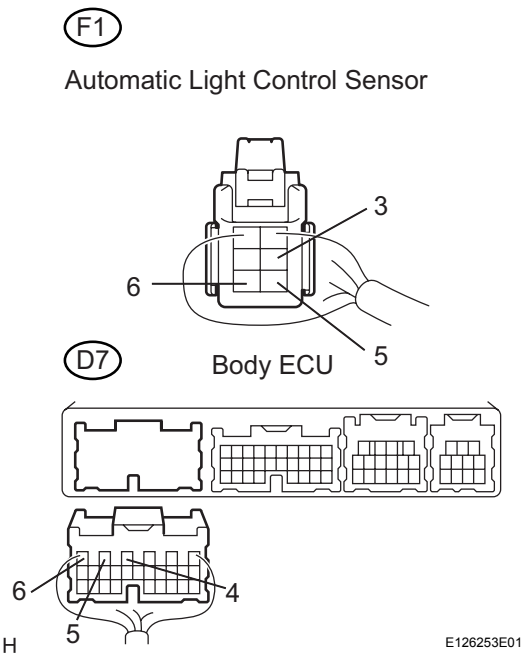

(a) Disconnect the automatic light control sensor connector and B6 connector of the multiplex network body ECU.
(b) Measure the resistance according to the value(s) in the table below.

Standard resistance

Tester Connection	Condition	Specified Condition
CLTE (F1-3) - CLTE (D7-4)	Always	Below 1 Ω
CLTS (F1-5) - CLTS (D7-5)	Always	Below 1 Ω
CLTB (1F-6) - CLTB (D7-6)	Always	Below 1 Ω
CLTE (D7-4) - Body ground	Always	10 kΩ or higher
CLTS (D7-5) - Body ground	Always	10 kΩ or higher
CLTB (D7-6) - Body ground	Always	10 kΩ or higher

NG → **REPAIR OR REPLACE HARNESS OR CONNECTOR**

OK

3	INSPECT AUTOMATIC LIGHT CONTROL SENSOR

(a) Inspect automatic light control sensor (See page LI-155).

OK:

Automatic light control sensor is normal.

NG → **REPLACE AUTOMATIC LIGHT CONTROL SENSOR**

OK

REPLACE INSTRUMENT PANEL JUNCTION BLOCK ASSEMBLY

Ignition Switch Circuit

DESCRIPTION

This circuit detects the state of the ignition switch and sends it to the multiplex network body ECU.

WIRING DIAGRAM

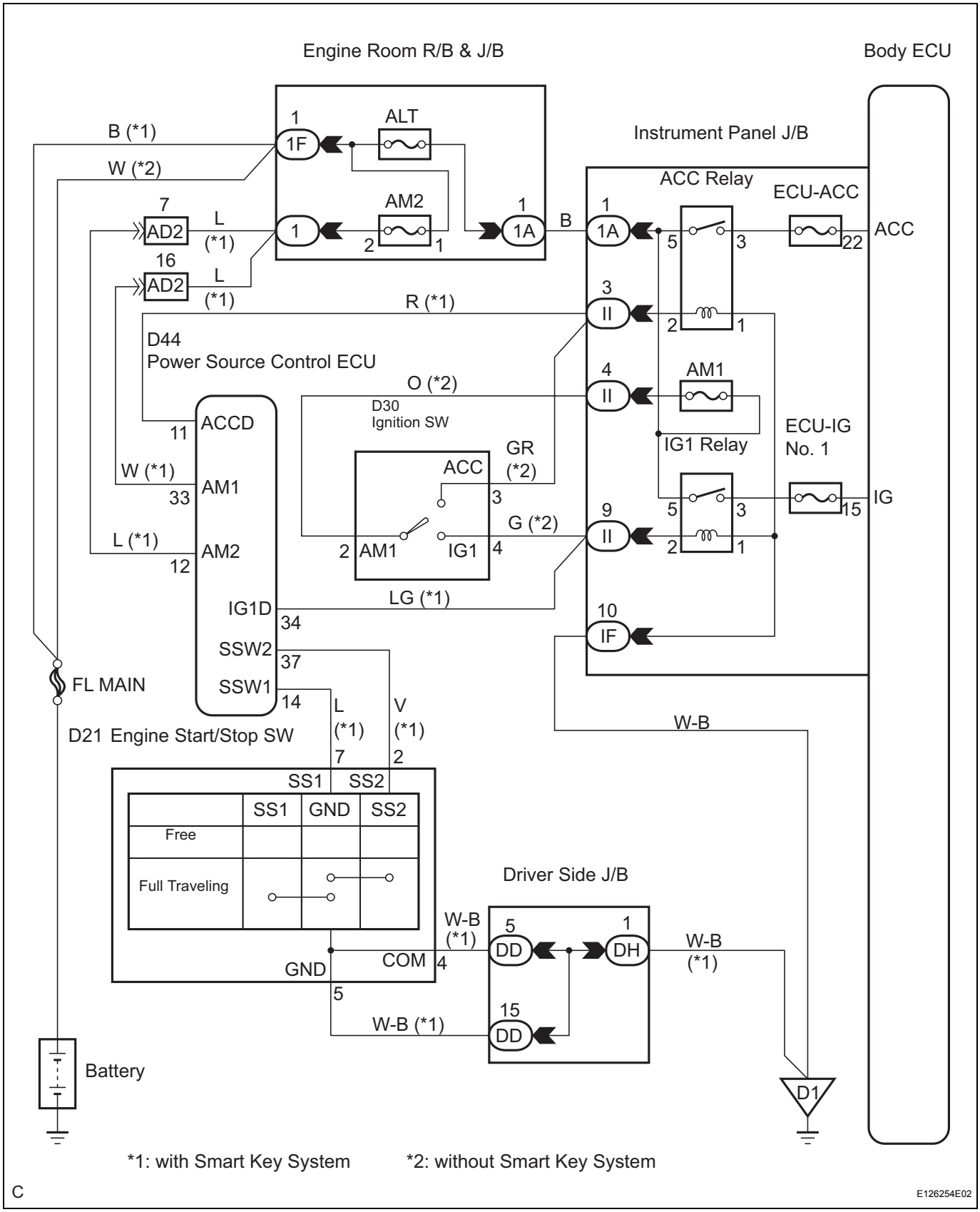

INSPECTION PROCEDURE

1	READ VALUE OF INTELLIGENT TESTER

(a) Connect the intelligent tester to the DLC3.
(b) Turn the ignition switch on (IG) and turn the intelligent tester main switch on.
(c) Select the items below in the DATA LIST, and read the displays on the intelligent tester.

BODY ECU:

Item	Measurement Item / Display (Range)	Normal Condition	Diagnostic Note
ACC SW	ACC SW signal / ON or OFF	ON: Ignition switch on (IG) or (ACC) OFF: Ignition switch off	-
IG SW	IG SW signal / ON or OFF	ON: Ignition switch on (IG) OFF: Ignition switch off or Ignition switch on (ACC)	-

LI

NG → **Go to step 2**

OK

PROCEED TO NEXT CIRCUIT INSPECTION SHOWN IN PROBLEM SYMPTOMS TABLE

2	INSPECT RELAY

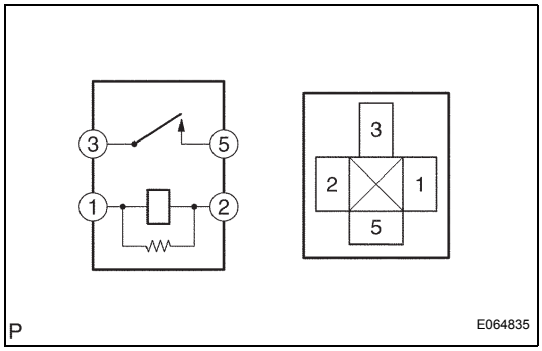

(a) Inspect ACC relay continuity.
(1) Remove the ACC relay from the instrument panel J/B.
(2) Measure the resistance according to the value(s) in the table below.
Standard resistance

Tester Connection	Specified Condition
3 - 5	10 kΩ or higher
3 - 5	Below 1 Ω (When battery voltage is applied to terminal 1 - 2)

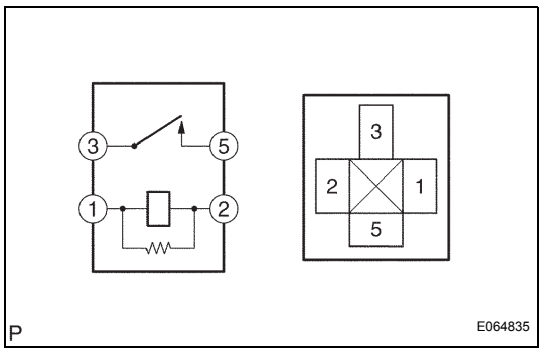

(b) Inspect IG1 relay continuity.
(1) Remove the IG1 relay from the instrument panel J/B.
(2) Measure the resistance according to the value(s) in the table below.
Standard resistance

Tester Connection	Specified Condition
3 - 5	10 kΩ or higher
3 - 5	Below 1 Ω (When battery voltage is applied to terminal 1 - 2)

NG → **REPLACE RELAY**

OK

3	CHECK HARNESS AND CONNECTOR (BATTERY - INSTRUMENT PANEL JUNCTION BLOCK ASSEMBLY)

(a) Measure the voltage according to the value(s) in the table below.

Instrument Panel Junction Block Assembly Front Side Wire Harness View:

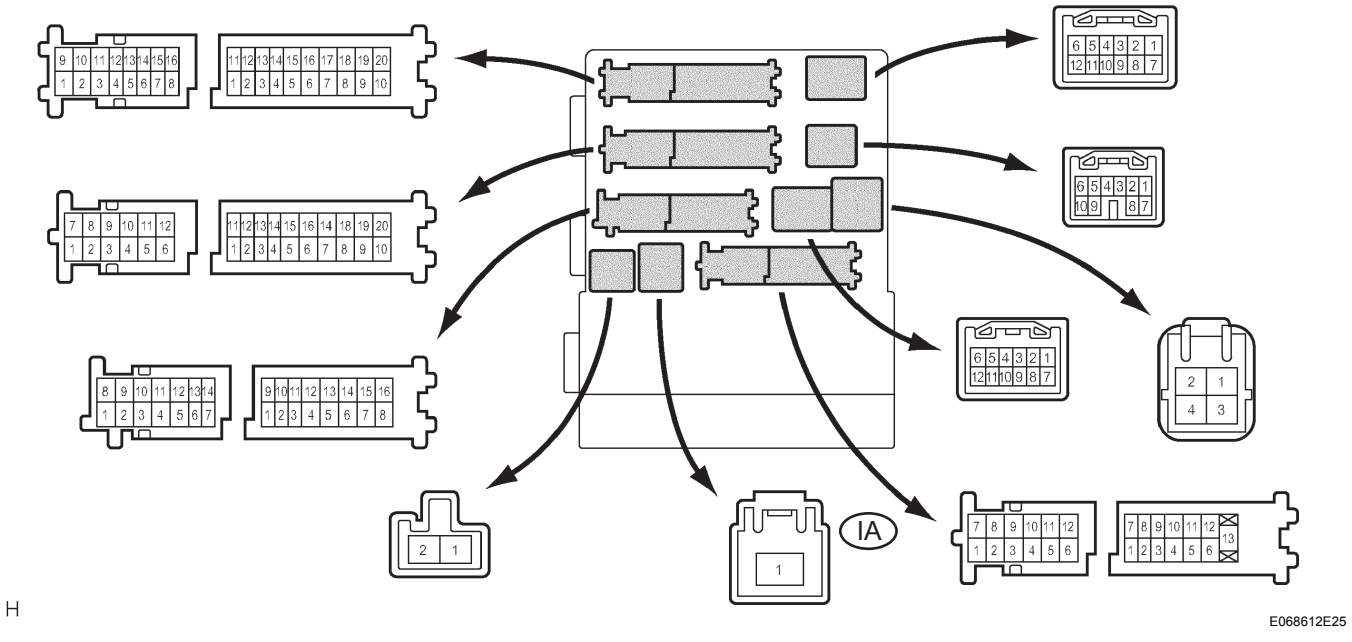

Standard voltage

Tester Connection	Condition	Specified Condition
IA-1 - Body ground	Always	10 to 14 V

NG → REPAIR OR REPLACE HARNESS OR CONNECTOR

OK

4	INSPECT INSTRUMENT PANEL JUNCTION BLOCK ASSEMBLY

(a) Measure the voltage according to the value(s) in the table below.

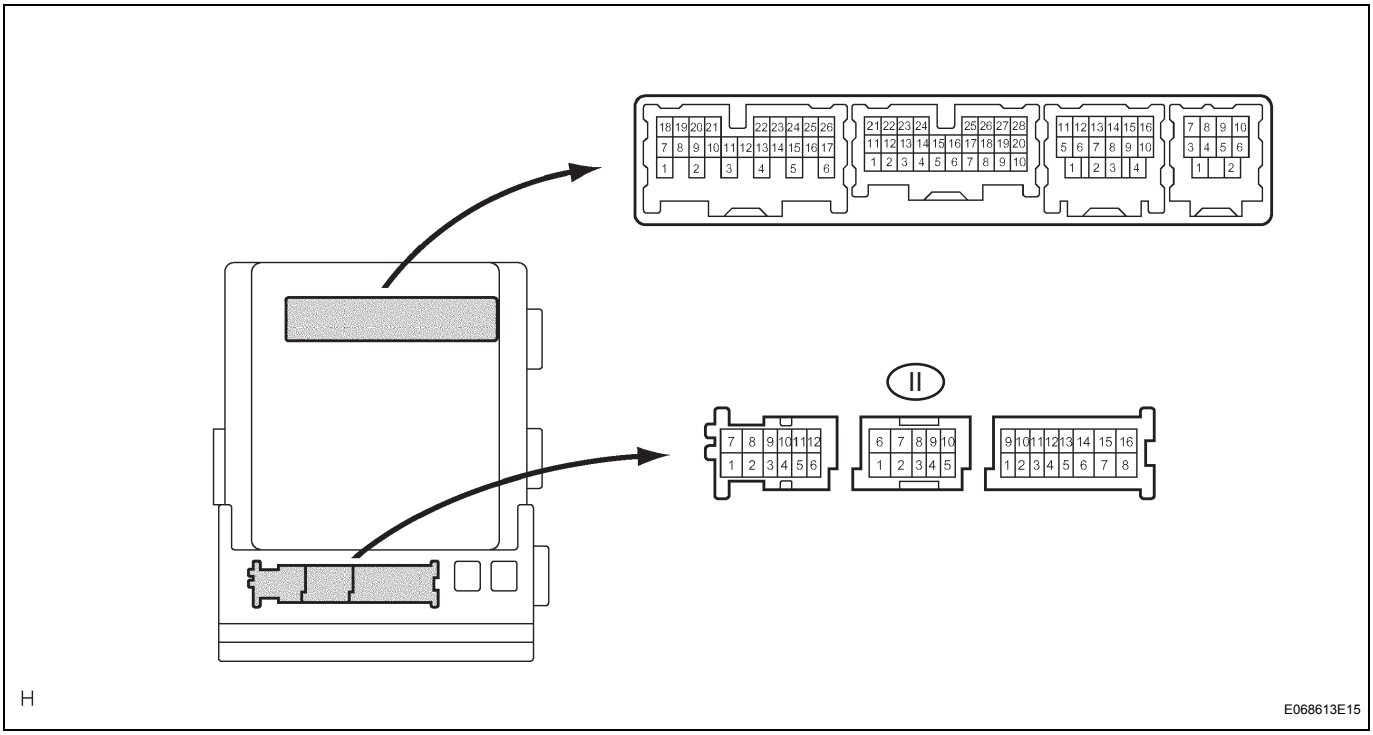

Standard voltage

Tester Connection	Condition	Specified Condition
II-4 - Body ground	Always	10 to 14 V

NG → **REPLACE INSTRUMENT PANEL JUNCTION BLOCK ASSEMBLY**

OK

5	**CHECK HARNESS AND CONNECTOR (INSTRUMENT PANEL JUNCTION BLOCK ASSEMBLY - BODY GROUND)**

(a) Disconnect the connector 1F from the instrument panel junction block assembly.
(b) Measure the resistance according to the value(s) in the table below.

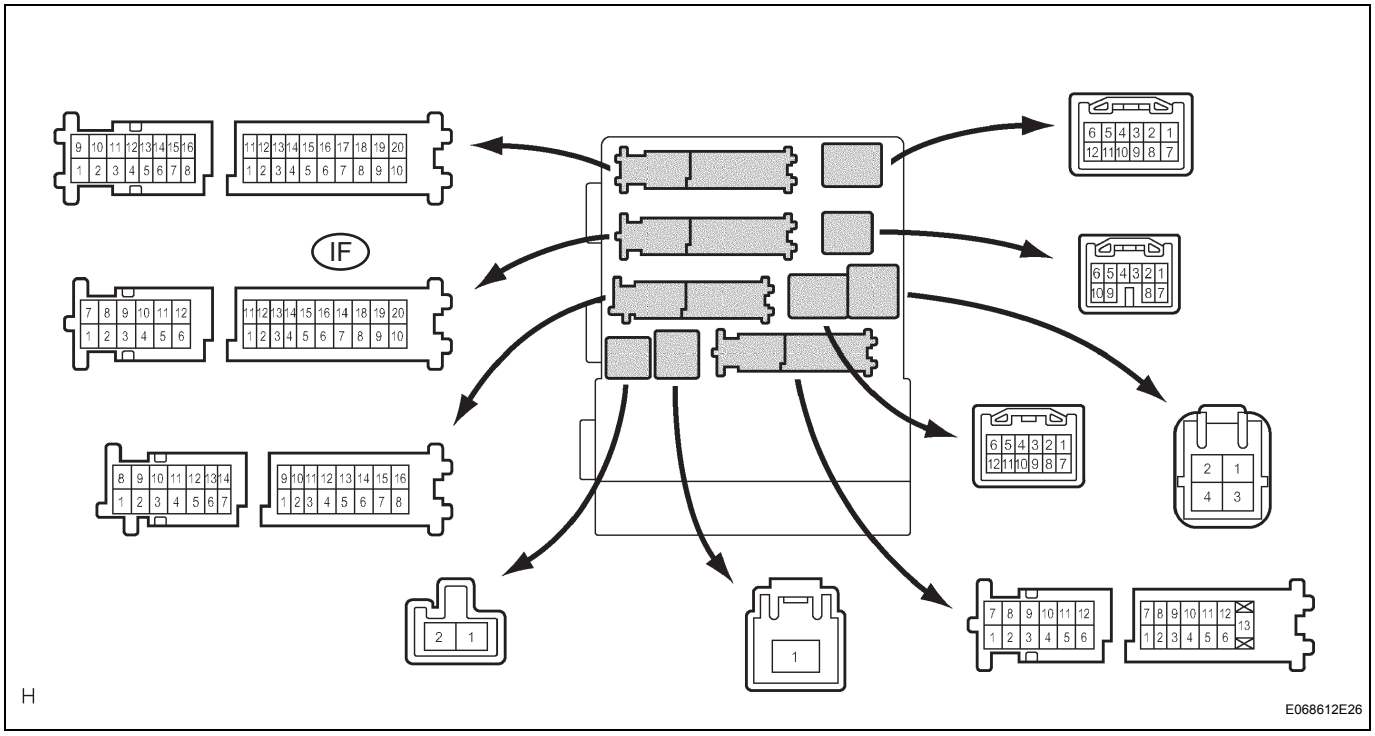

Standard resistance

Tester Connection	Condition	Specified Condition
IF-10 - Body ground	Always	Below 1 Ω

NG → **REPAIR OR REPLACE HARNESS OR CONNECTOR**

OK

6	CHECK HARNESS AND CONNECTOR (IGNITION SWITCH CIRCUIT)

(a) Inspect the harness and connectors related to ignition switch, referring to the wiring diagram.

NG → **REPAIR OR REPLACE HARNESS OR CONNECTOR**

OK

PROCEED TO NEXT CIRCUIT INSPECTION SHOWN IN PROBLEM SYMPTOMS TABLE

LI

Headlight Relay Circuit

DESCRIPTION

The front controller controls the HEAD relay when a signal is received from the headlight dimmer switch assembly.

WIRING DIAGRAM

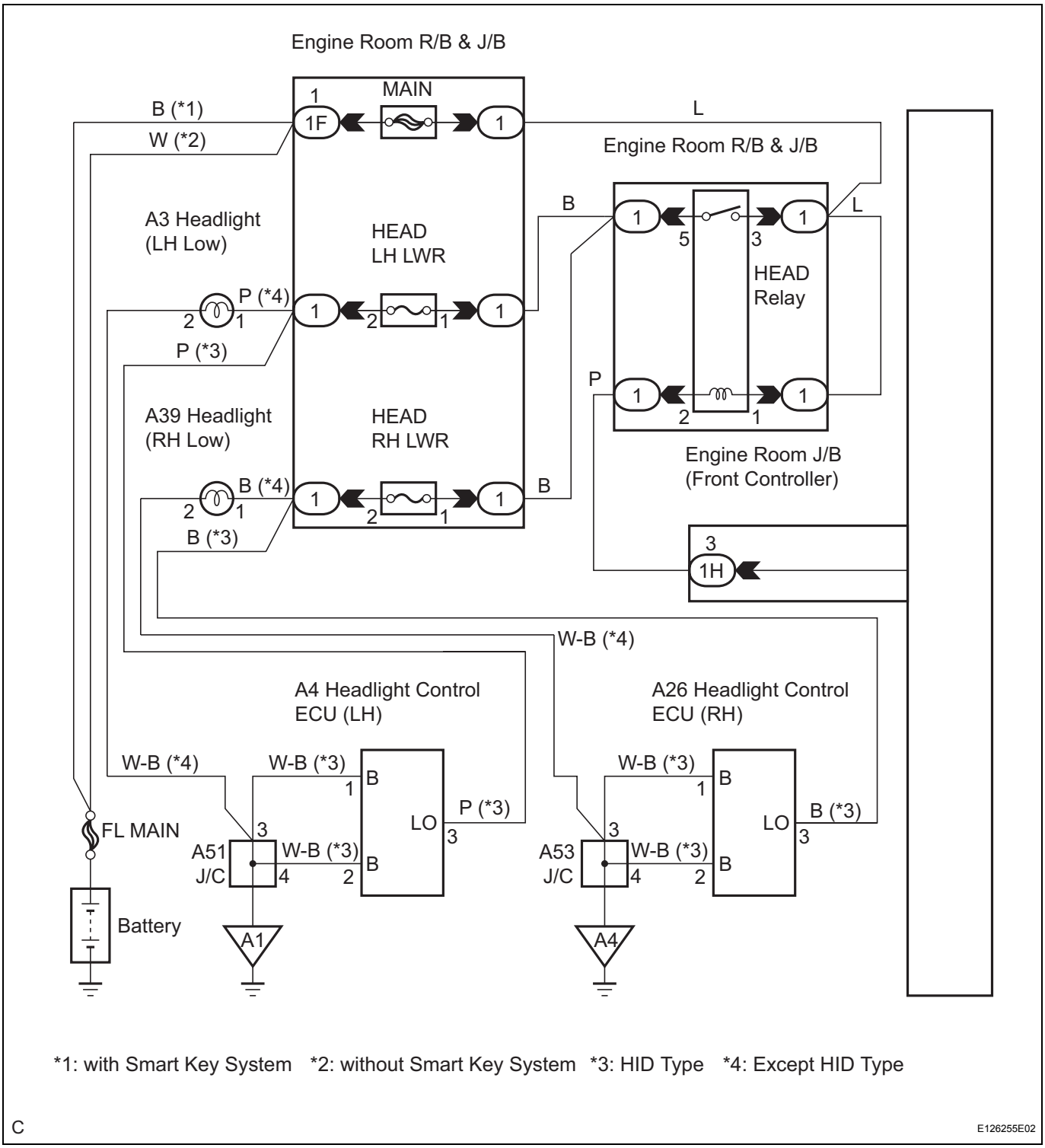

INSPECTION PROCEDURE

1	PERFORM ACTIVE TEST BY INTELLIGENT TESTER

(a) Connect the intelligent tester to the DLC3.
(b) Turn the ignition switch on (IG) and turn the intelligent tester main switch on.
(c) Select the item below in the ACTIVE TEST and then check the relay operation.

BODY NO. 5 (FRONT CONTROLLER):

Item	Test Details	Diagnostic Note
HEAD LIGHT (LO)	Light head (low) ON / OFF	-

OK:
Headlights come on.

NG → **Go to step 2**

OK

PROCEED TO NEXT CIRCUIT INSPECTION SHOWN IN PROBLEM SYMPTOMS TABLE

2	INSPECT RELAY

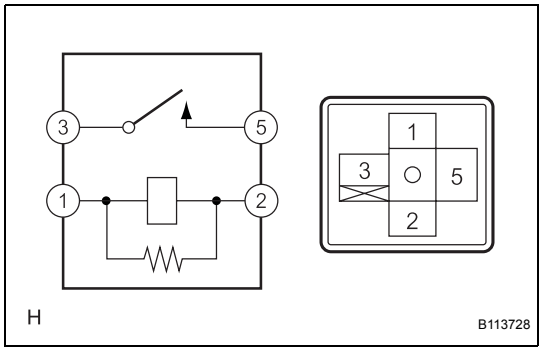

(a) Remove the HEAD relay from the engine room R/B & J/B.
(b) Measure the resistance according to the value(s) in the table below.

Standard resistance

Tester Connection	Specified Condition
3 - 5	10 kΩ or higher
3 - 5	Below 1 Ω (When battery voltage is applied to terminal 1 - 2)

NG → **REPLACE RELAY**

OK

3	CHECK HARNESS AND CONNECTOR (BATTERY - FRONT CONTROLLER)

(a) Disconnect the 1H connector from the front controller.
(b) Measure the voltage according to the value(s) in the table below.

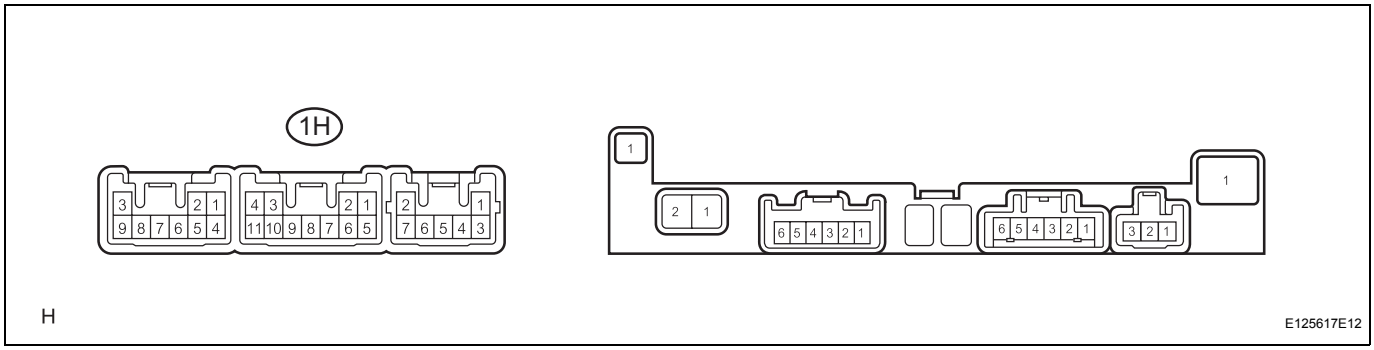

Standard resistance

Tester Connection	Condition	Specified Condition
1H-3 - Body ground	Always	10 to 14 V

NG → **REPAIR OR REPLACE HARNESS OR CONNECTOR**

OK

4	CHECK HARNESS AND CONNECTOR (HEAD RELAY - BODY GROUND)

(a) Using a service wire, connect the 1H-3 on the wire harness side and body ground.
OK:
Headlight comes on.

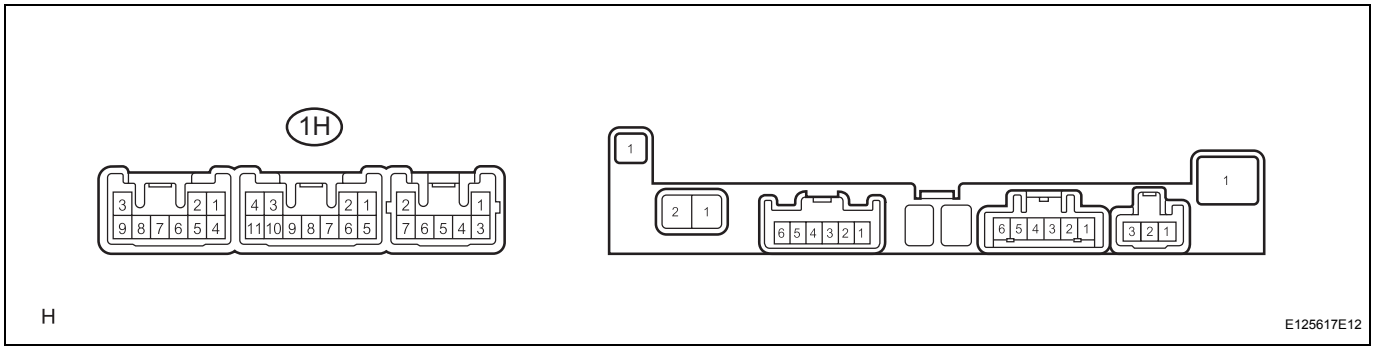

NG → **REPAIR OR REPLACE HARNESS OR CONNECTOR**

OK

PROCEED TO NEXT CIRCUIT INSPECTION SHOWN IN PROBLEM SYMPTOMS TABLE

Headlight (HI-BEAM) Circuit

DESCRIPTION

The front controller receives headlight HI switch information from the combination switch, and turns on the headlights.

WIRING DIAGRAM

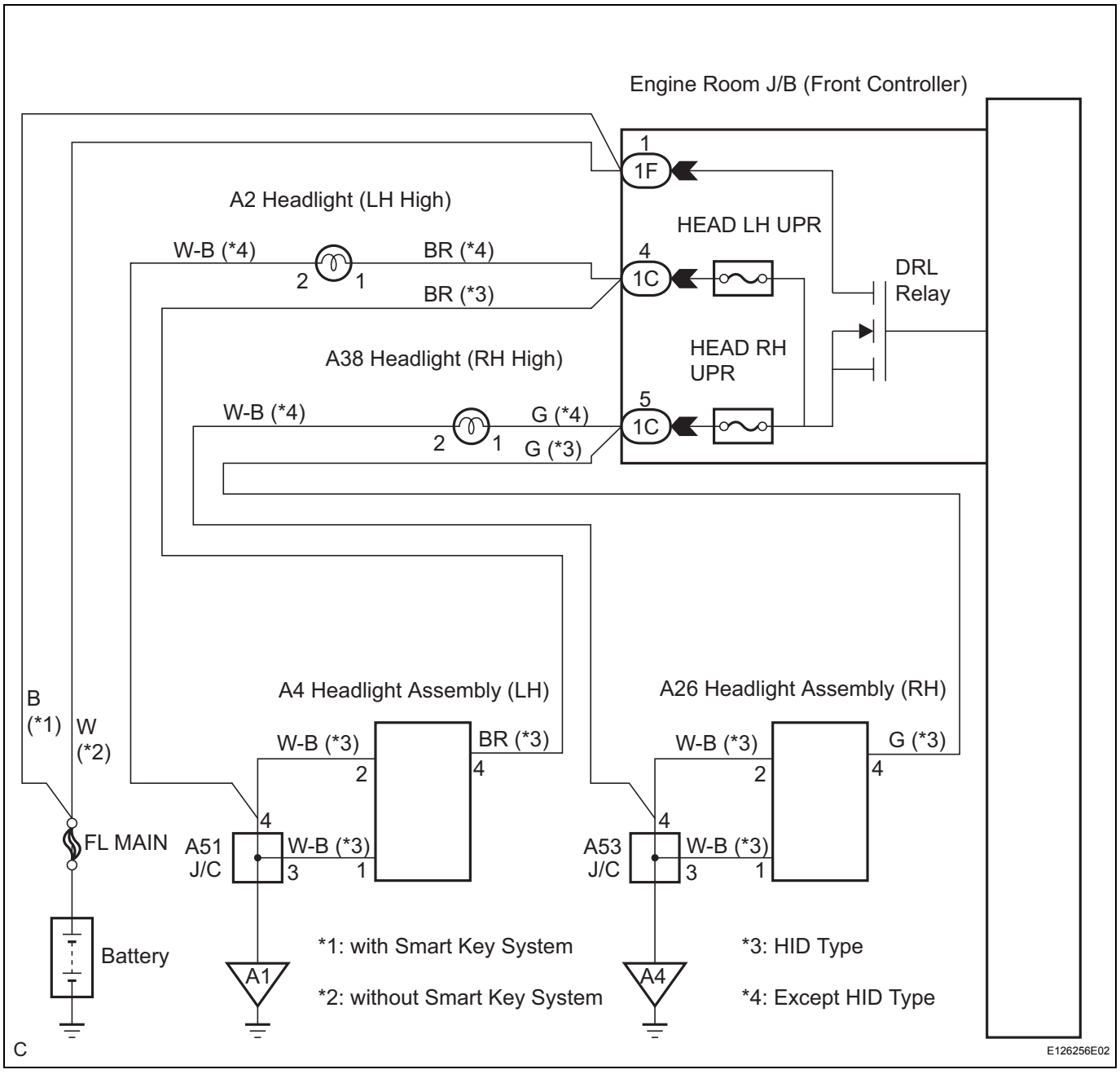

INSPECTION PROCEDURE

1	PERFORM ACTIVE TEST BY INTELLIGENT TESTER

(a) Connect the intelligent tester to the DLC3.

(b) Turn the ignition switch on (IG) and turn the intelligent tester main switch on.
(c) Select the items below in the ACTIVE TEST and then check the headlight operation.

BODY NO. 5 (FRONT CONTROLLER):

Item	Test Details	Diagnostic Note
HEAD LIGHT (HI)	Light head (high) ON / OFF	-
DRL OPERT	Light head (high) DRL ON / OFF	-

OK:
High beam comes on.

NG → **Go to step 2**

LI

OK

PROCEED TO NEXT CIRCUIT INSPECTION SHOWN IN PROBLEM SYMPTOMS TABLE

2 CHECK HARNESS AND CONNECTOR (BATTERY - FRONT CONTROLLER)

(a) Measure the voltage according to the value(s) in the table below.

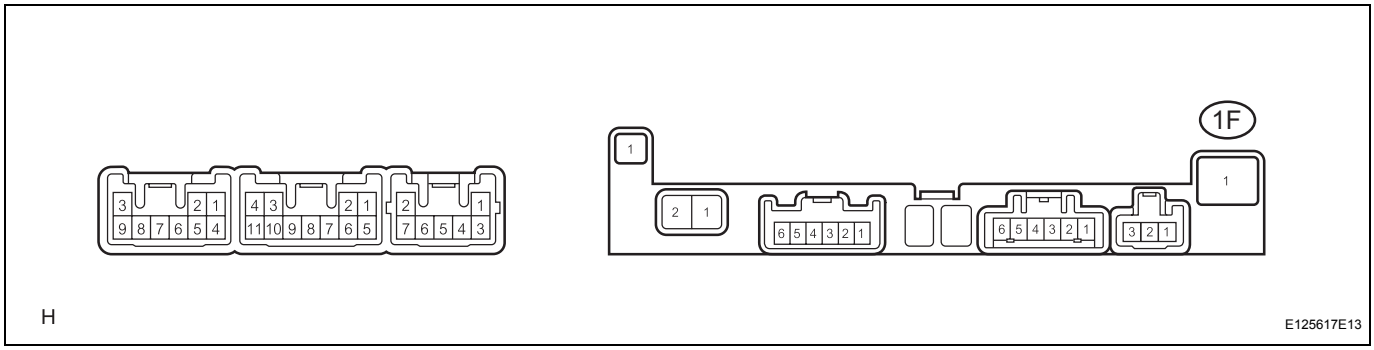

Standard voltage

Tester Connection	Condition	Specified Condition
1F-1 - Body ground	Always	10 to 14 V

NG → **REPAIR OR REPLACE HARNESS OR CONNECTOR**

OK

3 INSPECT ENGINE ROOM JUNCTION BLOCK ASSEMBLY

(a) Measure the voltage according to the value(s) in the table below.

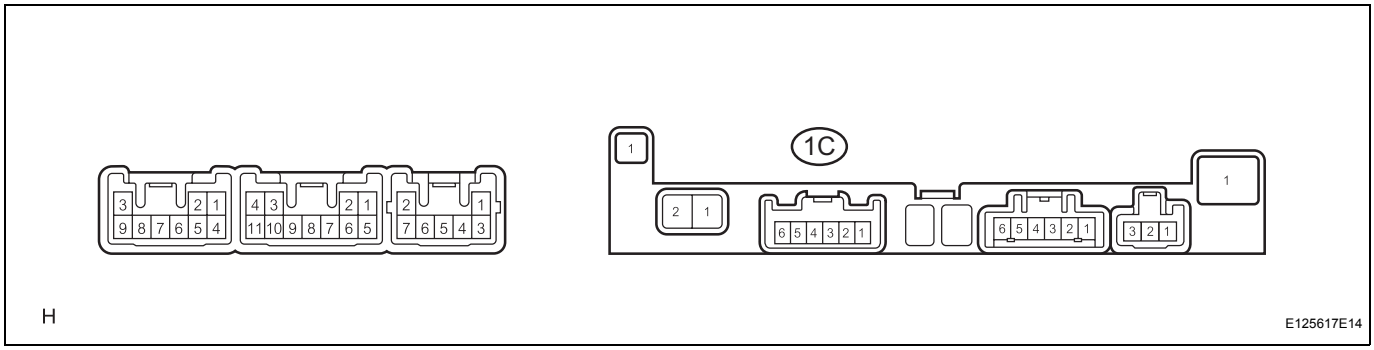

Standard voltage

Tester Connection	Condition	Specified Condition
1C-4 - Body ground	Ignition switch on (IG), headlight dimmer switch in the HI position	10 to 14 V
1C-5 - Body ground	Ignition switch on (IG), headlight dimmer switch in the HI position	10 to 14 V

LI

NG → **REPLACE ENGINE ROOM JUNCTION BLOCK ASSEMBLY (FRONT CONTROLLER)**

OK

REPAIR OR REPLACE HARNESS OR CONNECTOR (FRONT CONTROLLER - BODY GROUND)

Front Fog Light Circuit

DESCRIPTION

The multiplex network body ECU controls the FOG relay when a signal is received from the headlight dimmer switch assembly.

WIRING DIAGRAM

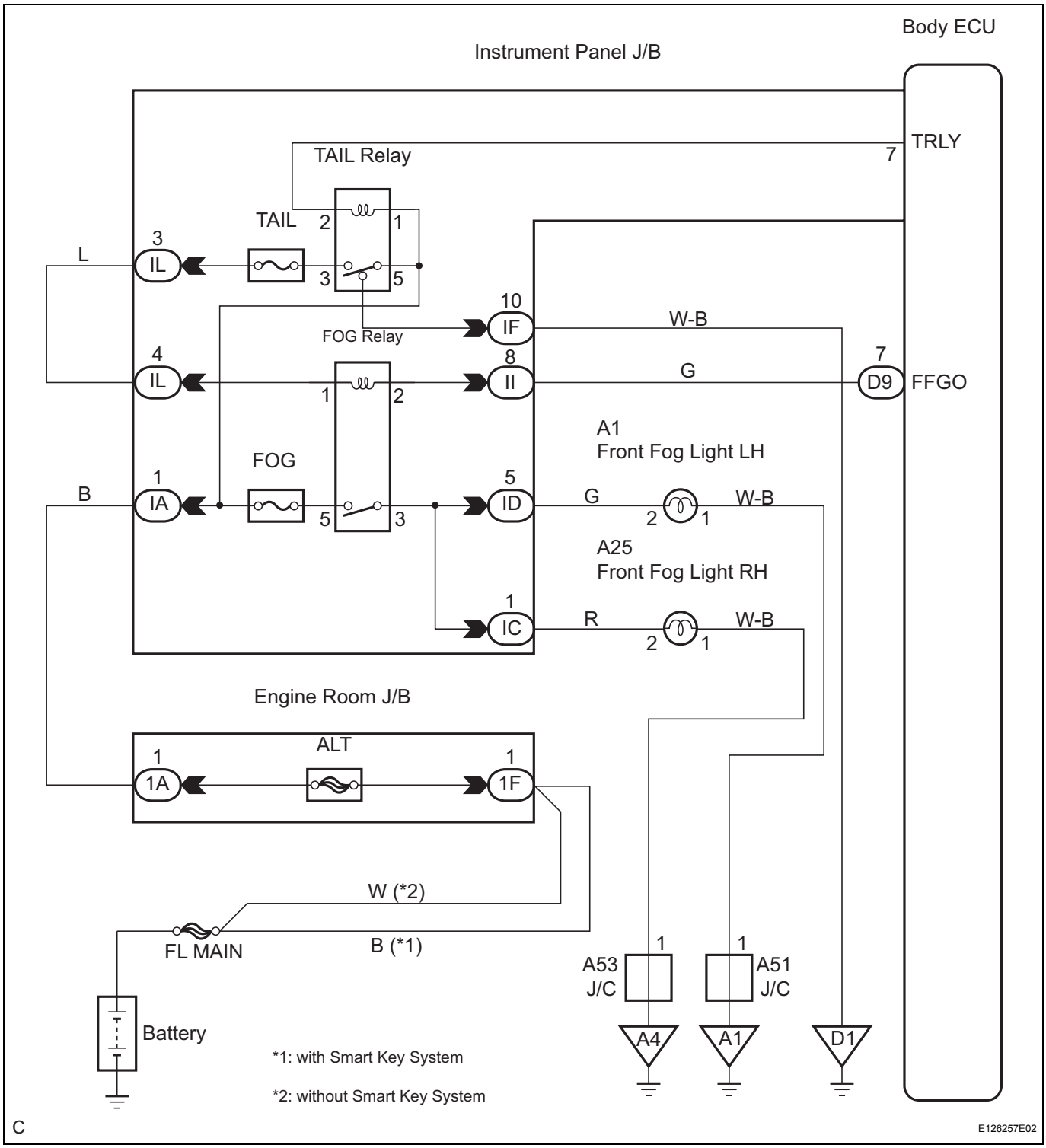

INSPECTION PROCEDURE

1	PERFORM ACTIVE TEST BY INTELLIGENT TESTER

(a) Connect the intelligent tester to DLC3.
(b) Turn the ignition switch on (IG) and turn the intelligent tester main switch on.
(c) Select the item below in the ACTIVE TEST and then check that the relay operates.

BODY ECU:

Item	Test Details	Diagnostic Note
F FOG LIGHT RLY	Front fog light relay ON / OFF	-

OK:
Front fog lights come on.

NG → **Go to step 2**

OK

PROCEED TO NEXT CIRCUIT INSPECTION SHOWN IN PROBLEM SYMPTOMS TABLE

2	INSPECT RELAY

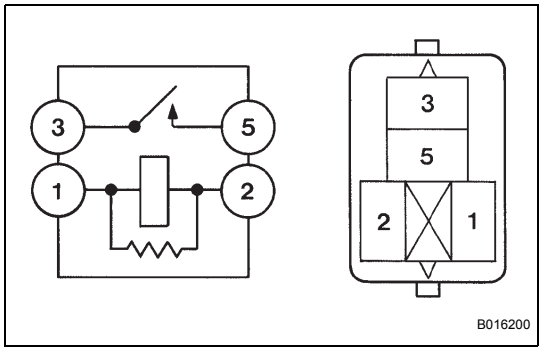

(a) Inspect front fog relay continuity.
(1) Remove the front fog relay from the instrument panel J/B.
(2) Measure the resistance according to the value(s) in the table below.
Standard resistance

Tester Connection	Specified Condition
3 - 5	10 kΩ or higher
3 - 5	Below 1 Ω (When battery voltage is applied to terminal 1- 2)

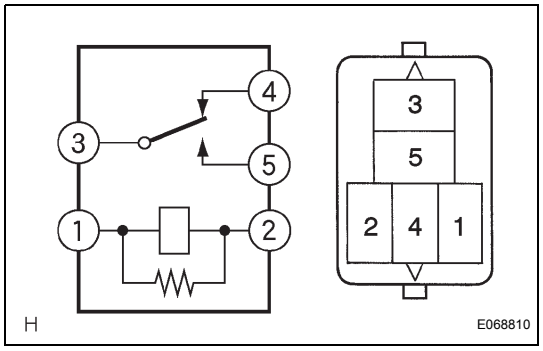

(b) Inspect TAIL relay continuity.
(1) Remove the tail relay from the instrument panel J/B.
(2) Measure the resistance according to the value(s) in the table below.
Standard resistance

Tester Connection	Specified Condition
3 - 5	10 kΩ or higher
3 - 5	Below 1 Ω (When battery voltage is applied to terminal 1- 2)
3 - 4	Below 1 Ω (When battery voltage is applied to terminal 1- 2)

NG → **REPLACE RELAY**

OK

3	INSPECT HARNESS AND CONNECTOR (BATTERY - INSTRUMENT PANEL JUNCTION BLOCK ASSEMBLY)

(a) Measure the voltage according to the value(s) in the table below.

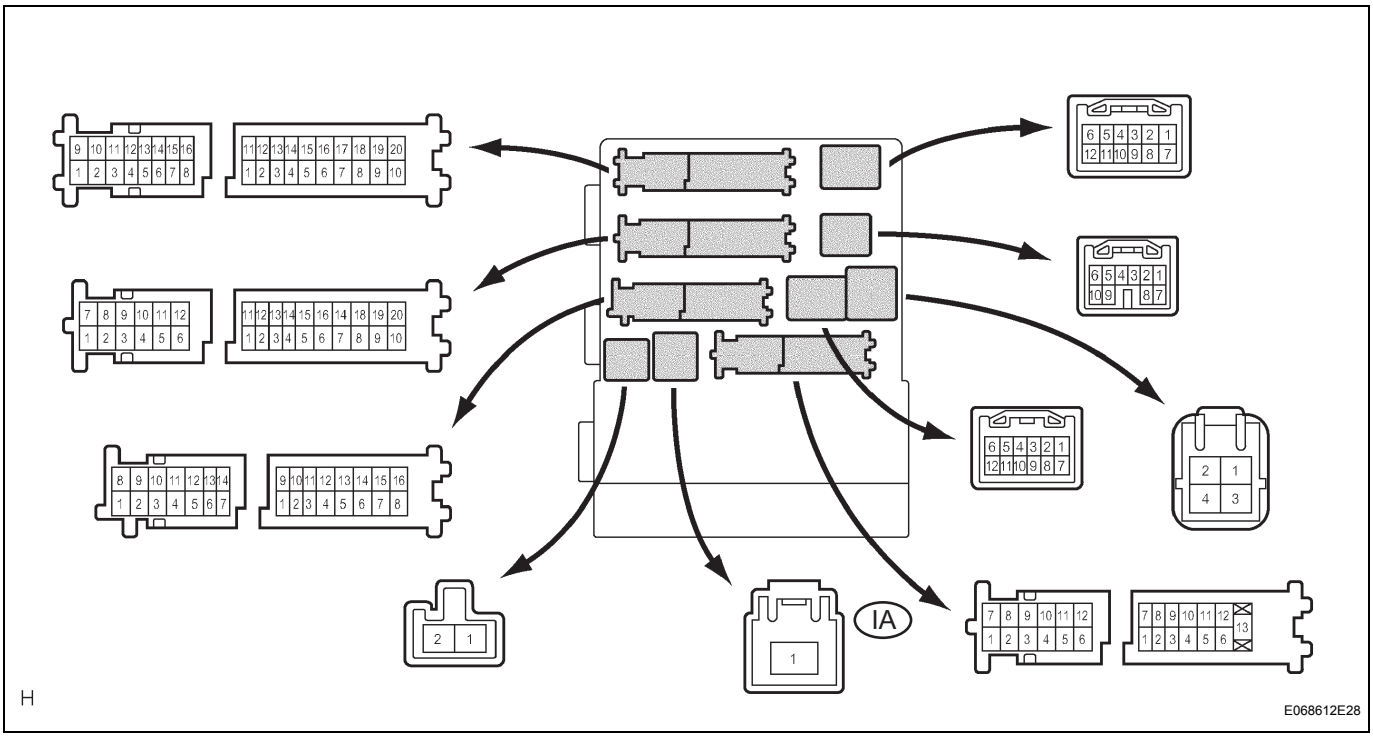

Standard voltage

Tester Connection	Condition	Specified Condition
IA-1 - Body ground	Always	10 to 14 V

NG → **REPAIR OR REPLACE HARNESS OR CONNECTOR**

OK

4	INSPECT INSTRUMENT PANEL JUNCTION BLOCK ASSEMBLY

(a) Measure the voltage according to the value(s) in the table below.

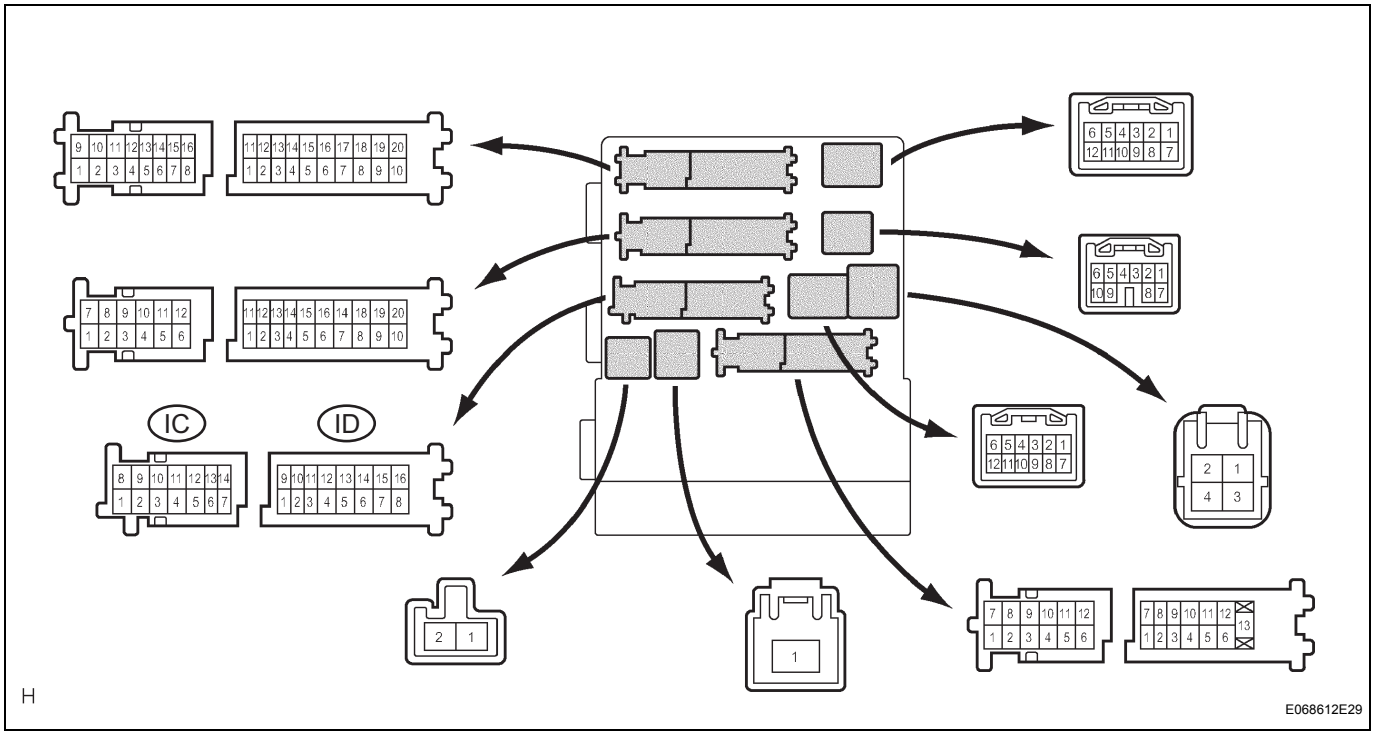

Standard voltage

Tester Connection	Condition	Specified Condition
IC-1 - Body ground	Light control switch TAIL and Front fog light switch OFF → ON	Below 1 V → 10 to 14 V
ID-5 - Body ground	Light control switch TAIL and Front fog light switch OFF → ON	Below 1 V → 10 to 14 V

NG → **Go to step 5**

OK →

REPAIR OR REPLACE HARNESS OR CONNECTOR

5	INSPECT INSTRUMENT PANEL JUNCTION BLOCK ASSEMBLY

(a) Measure the voltage according to the value(s) in the table below.

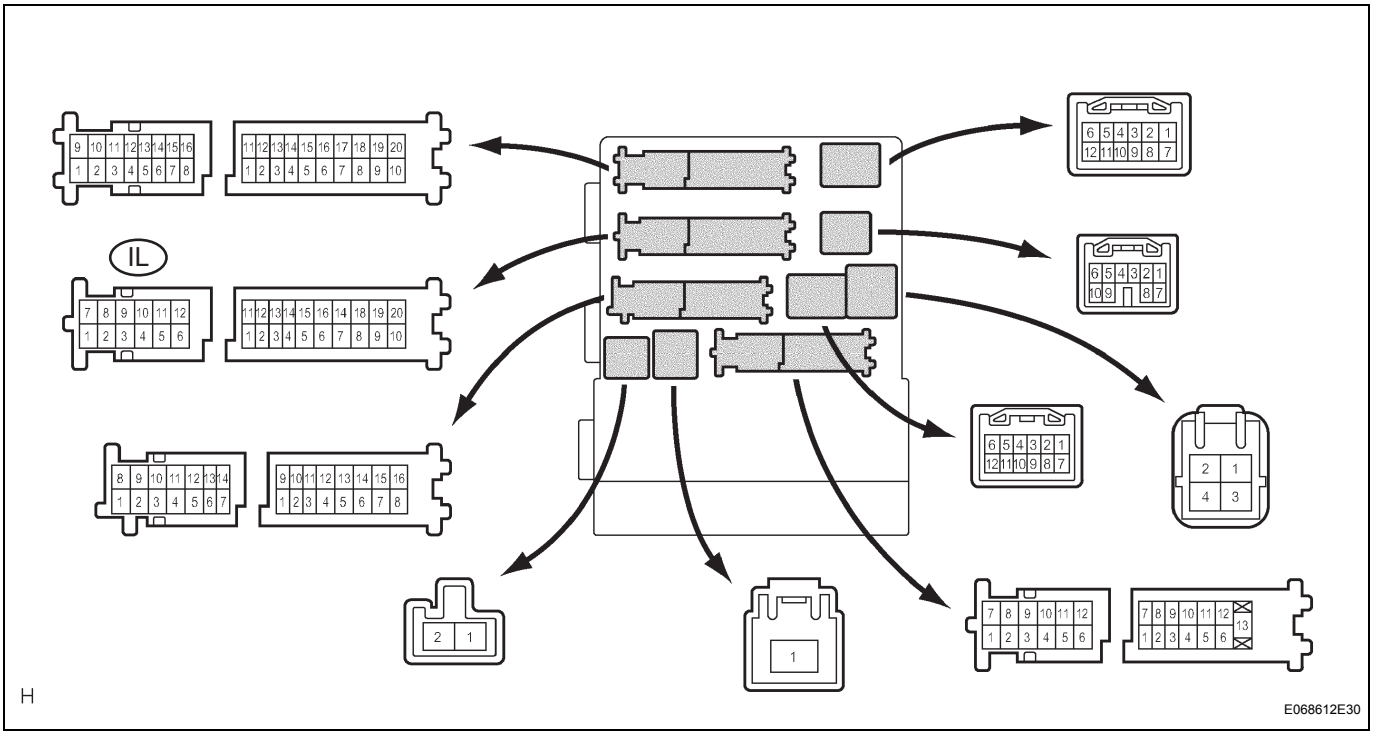

Standard voltage

Tester Connection	Condition	Specified Condition
IL-3 - Body ground	Light control switch OFF → TAIL	Below 1 V → 10 to 14 V

NG → **PROCEED TO NEXT CIRCUIT INSPECTION SHOWN IN PROBLEM SYMPTOMS TABLE**

OK

6	**CHECK HARNESS AND CONNECTOR (INSTRUMENT JUNCTION BLOCK ASSEMBLY CIRCUIT)**

(a) Measure the voltage according to the value(s) in the table below.

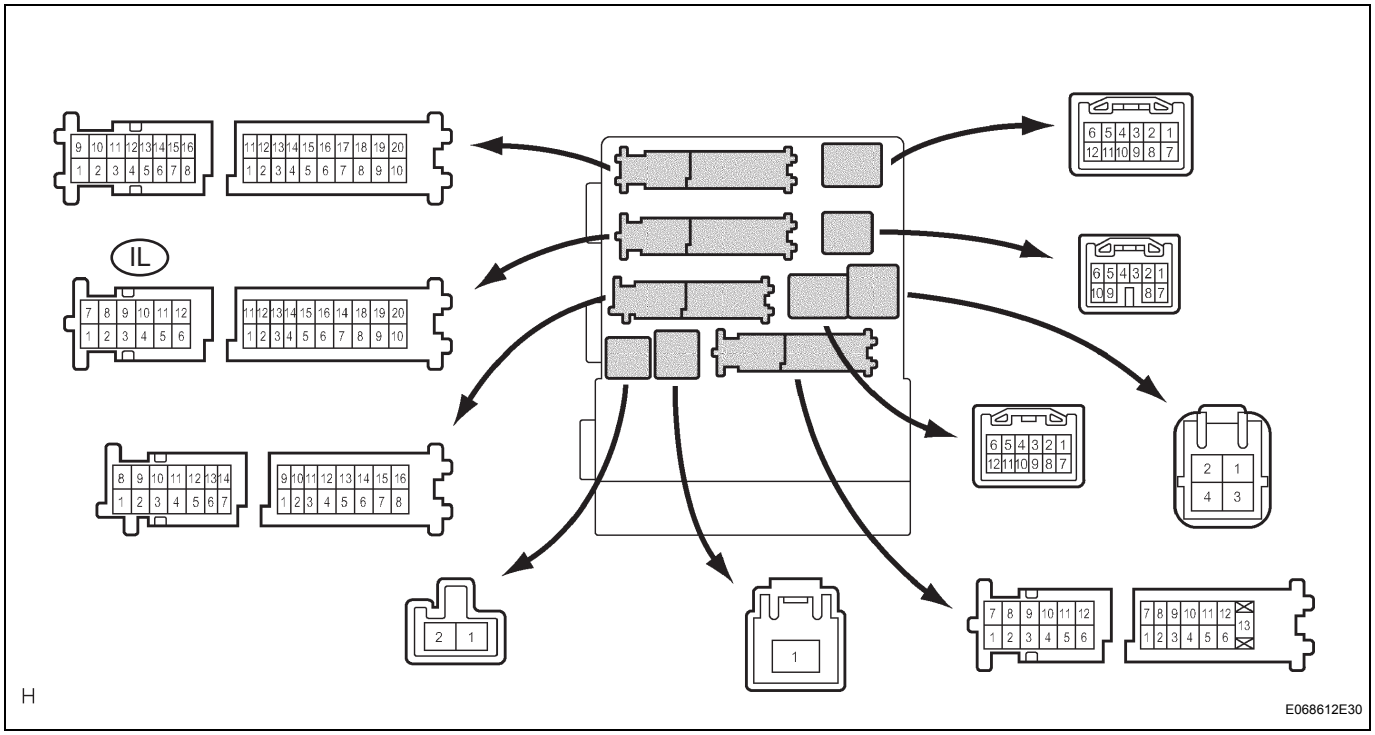

Standard voltage

Tester Connection	Condition	Specified Condition
IL-4 - Body ground	Light control switch OFF → TAIL	Below 1 V → 10 to 14 V

NG → **REPAIR OR REPLACE HARNESS OR CONNECTOR**

OK

7	CHECK HARNESS AND CONNECTOR (BODY ECU - INSTRUMENT PANEL JUNCTION BLOCK ASSEMBLY)

(a) Disconnect the D9 connector of the multiplex network body ECU and the II connector of the instrument panel junction block assembly.
(b) Measure the resistance according to the value(s) in the table below.

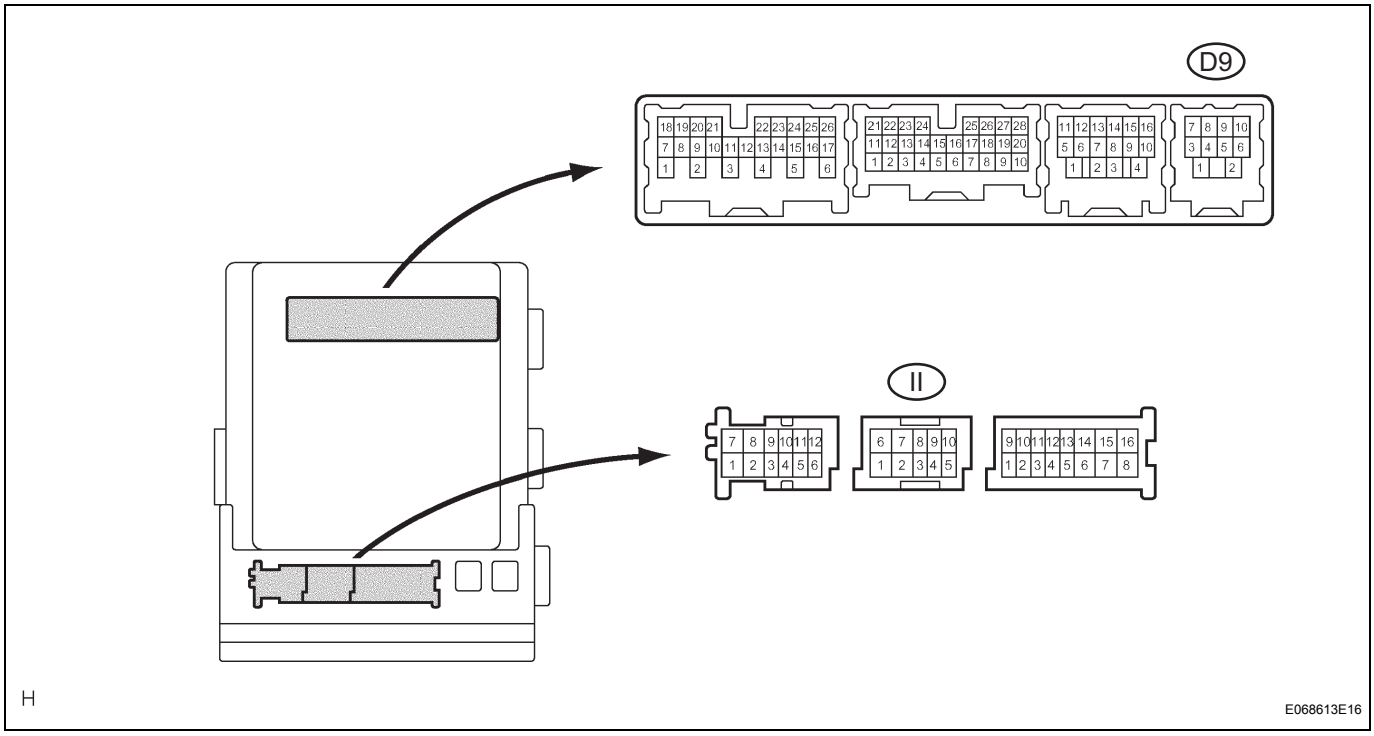

Standard resistance

Tester Connection	Condition	Specified Condition
D9-7 - II-8	Always	Below 1 Ω

NG → **REPAIR OR REPLACE HARNESS OR CONNECTOR**

OK

PROCEED TO NEXT CIRCUIT INSPECTION SHOWN IN PROBLEM SYMPTOMS TABLE

Turn Signal Light Circuit

DESCRIPTION

Receiving the signal of the turn signal switch from the combination switch ECU, the body ECU turns the turn signal light on.
The driver side junction block ECU activates the flasher relay while the theft deterrent system gives the warning and turns on the turn signal light and the hazard warning light.

WIRING DIAGRAM

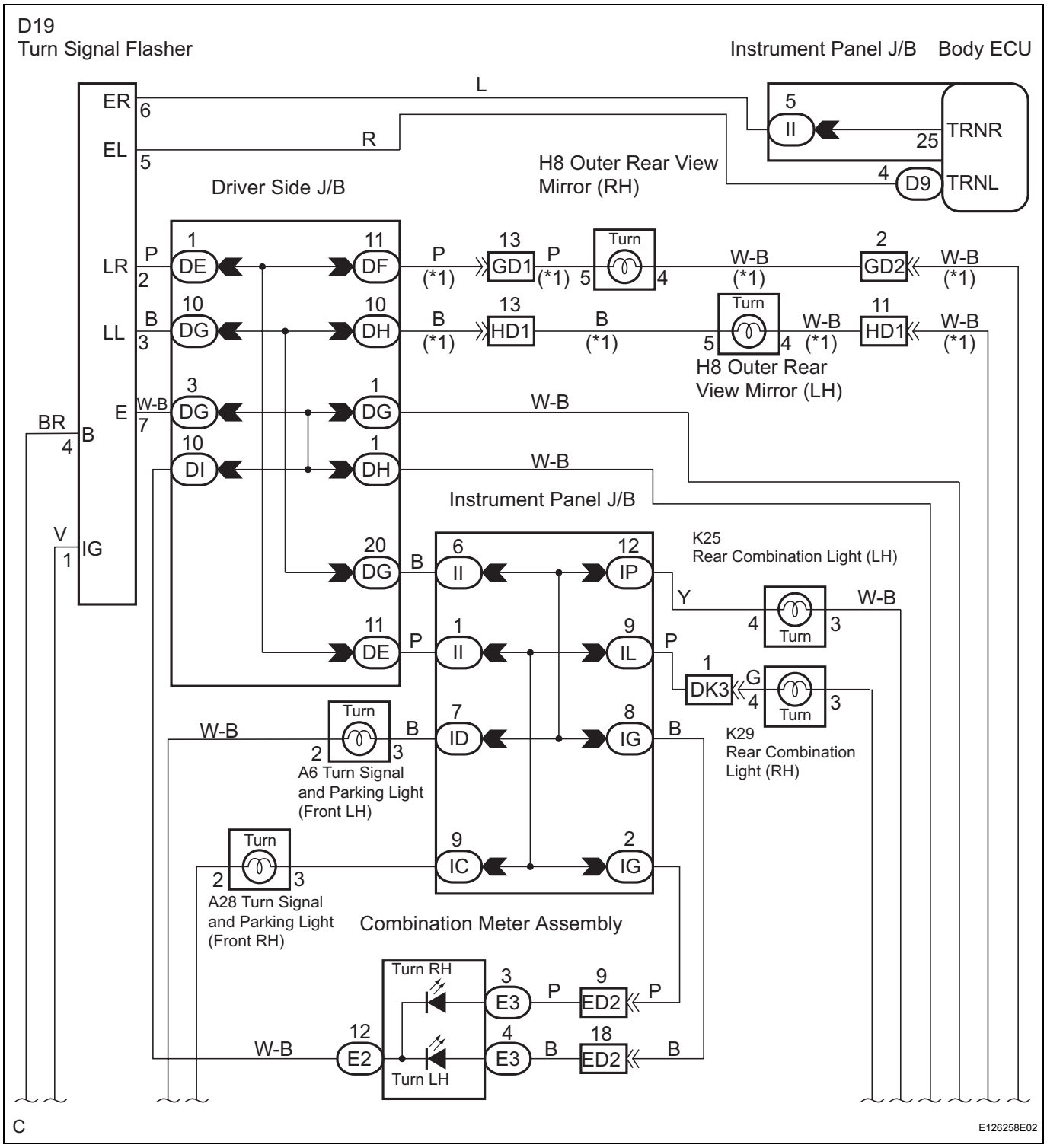

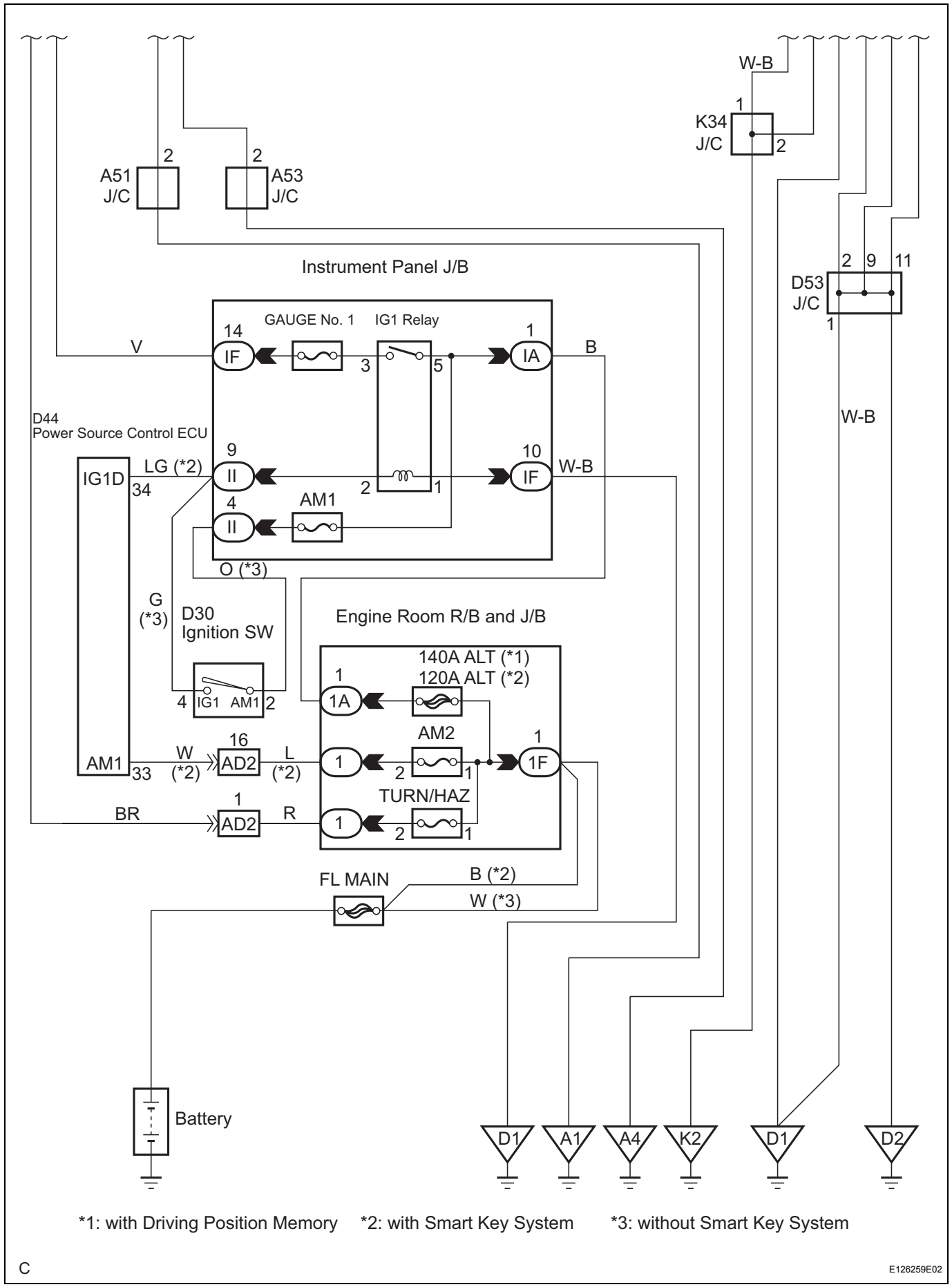

*1: with Driving Position Memory *2: with Smart Key System *3: without Smart Key System

C

E126259E02

INSPECTION PROCEDURE

1	PERFORM ACTIVE TEST BY INTELLIGENT TESTER

(a) Connect the intelligent tester to the DLC3.
(b) Turn the ignition switch on (IG) and turn the intelligent tester main switch on.
(c) Select the item below in the ACTIVE TEST and then check the turn signal light operation.

BODY ECU:

Item	Test Details	Diagnostic Note
Turn signal light RH	Turn signal light RH ON / OFF	-
Turn signal light LH	Turn signal light LH ON / OFF	-

OK:
Turn signal light comes on.

NG → **Go to step 2**

OK

PROCEED TO NEXT CIRCUIT INSPECTION SHOWN IN PROBLEM SYMPTOMS TABLE

2	CHECK HARNESS AND CONNECTOR (BATTERY - TURN SIGNAL FLASHER ASSEMBLY)

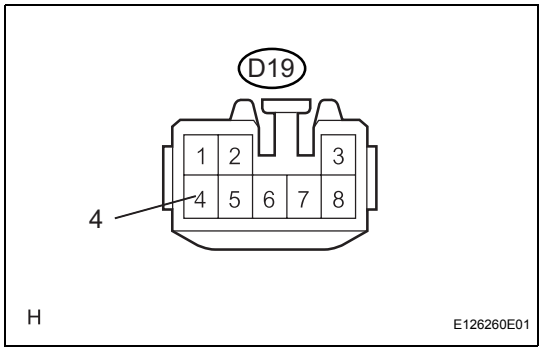

(a) Disconnect the connector from the turn signal flasher.
(b) Measure the voltage according to the value(s) in the table below.
Standard voltage

Tester Connection	Condition	Specified Condition
B (D19-4) - Body ground	Always	10 to 14 V

NG → **REPAIR OR REPLACE HARNESS OR CONNECTOR**

OK

3	CHECK HARNESS AND CONNECTOR (IGNITION SWITCH CIRCUIT)

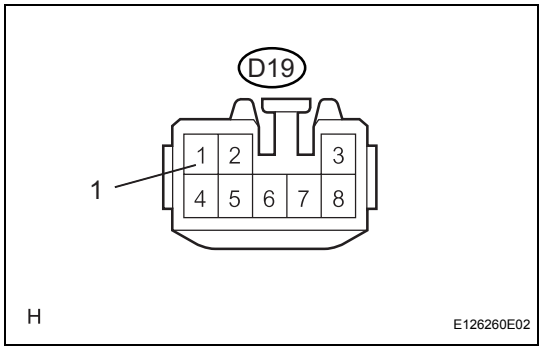

(a) Measure the voltage according to the value(s) in the table below.
Standard voltage

Tester Connection	Condition	Specified Condition
IG (D19-1) - Body ground	Ignition switch on (IG)	10 to 14 V

NG → **REPAIR OR REPLACE HARNESS OR CONNECTOR**

OK

4	CHECK HARNESS AND CONNECTOR (TURN SIGNAL FLASHER ASSEMBLY - BODY GROUND)

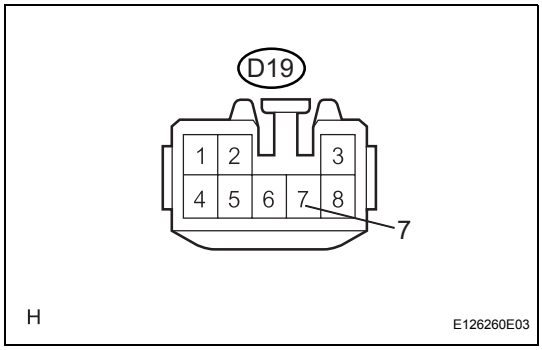

(a) Measure the resistance according to the value(s) in the table below.
Standard resistance

Tester Connection	Condition	Specified Condition
E (D19-7)- Body ground	Always	Below 1 Ω

NG → **REPAIR OR REPLACE HARNESS OR CONNECTOR**

OK

5	INSPECT TURN SIGNAL FLASHER ASSEMBLY

(a) Inspect turn signal flasher assembly.
OK:
Turn signal flasher assembly is normal.

NG → **REPLACE TURN SIGNAL FLASHER ASSEMBLY**

OK

6	CHECK HARNESS AND CONNECTOR (TURN SIGNAL FLASHER ASSEMBLY - INSTRUMENT PANEL JUNCTION)

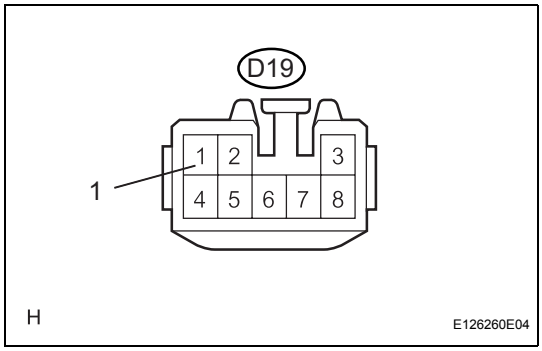

(a) Disconnect the turn signal flasher connector.
(b) Disconnect connectors II and D9 from the instrument panel J/B assembly.
(c) Measure the resistance according to the value(s) in the table below.

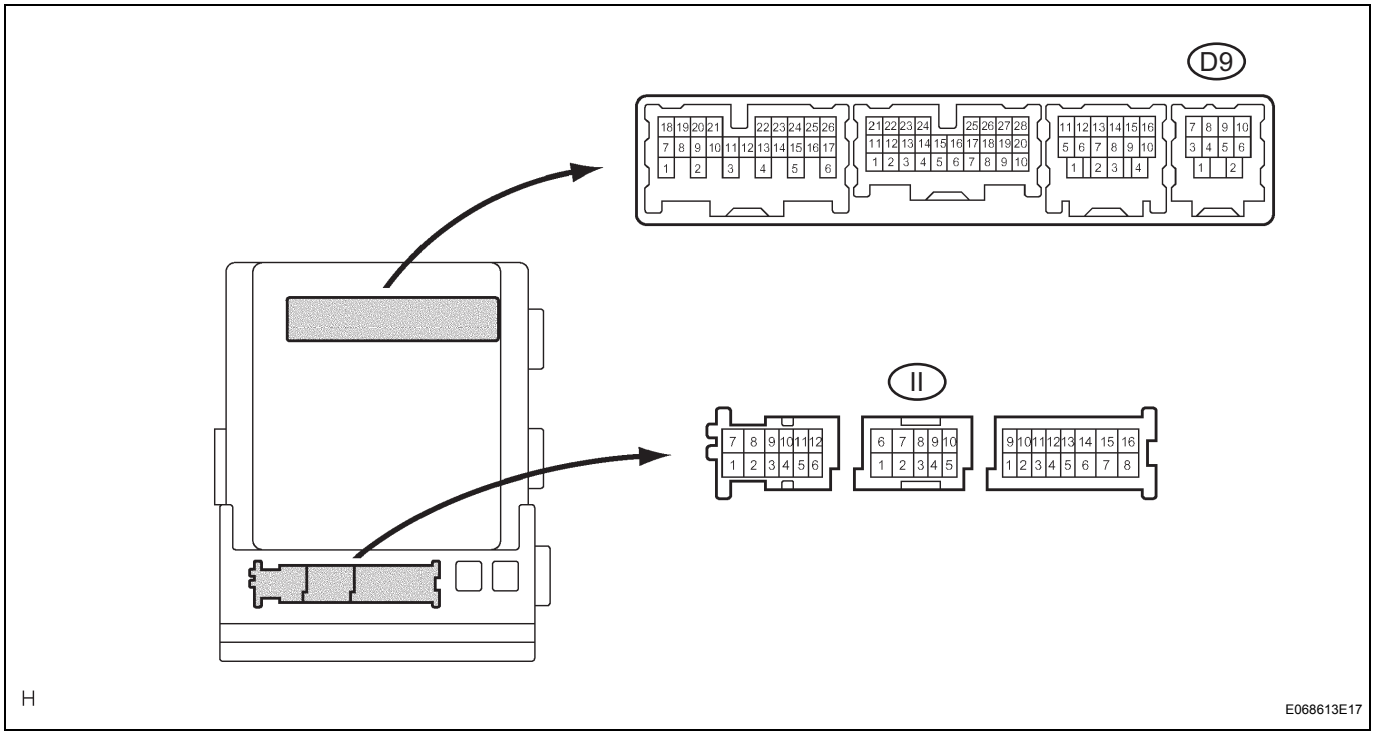

Standard resistance

Tester Connection	Condition	Specified Condition
EL (D19-5) - TRNL (D9-4)	Always	Below 1 Ω
ER (D19-6) - TRNR (II-5)	Always	Below 1 Ω
EL (D19-5) - Body ground	Always	10 kΩ or higher
ER (D19-6) - Body ground	Always	10 kΩ or higher

NG → **REPAIR OR REPLACE HARNESS OR CONNECTOR**

OK

7	INSPECT HARNESS AND CONNECTOR (EACH TURN SIGNAL LIGHT CIRCUIT)

(a) Inspect the harness and connectors related to each turn signal light, referring to the wiring diagram.

NG → **REPAIR OR REPLACE HARNESS OR CONNECTOR**

OK

PROCEED TO NEXT CIRCUIT INSPECTION SHOWN IN PROBLEM SYMPTOMS TABLE

LI

Hazard Warning Switch Circuit

DESCRIPTION

The hazard warning switch sends a signal to the turn signal flasher relay.

WIRING DIAGRAM

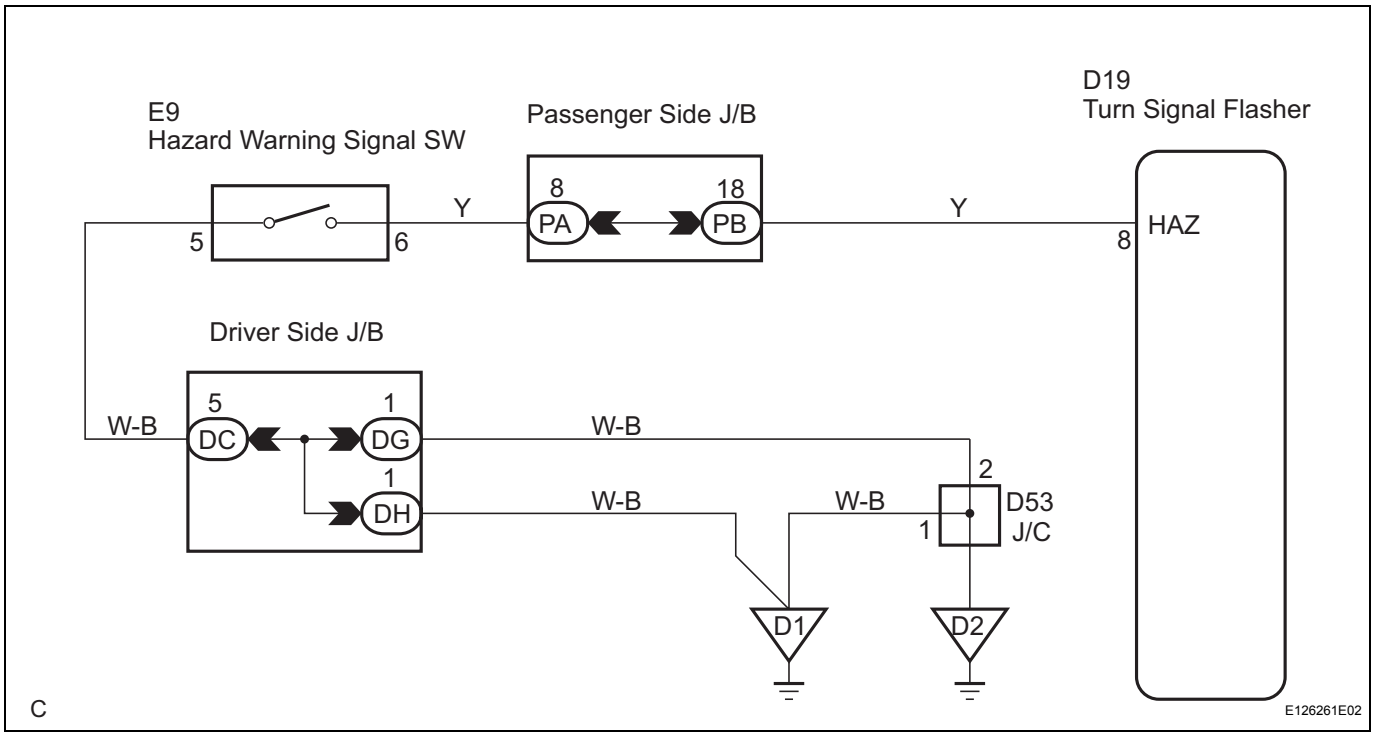

INSPECTION PROCEDURE

1	INSPECT HARNESS AND CONNECTOR (TURN SIGNAL FLASHER ASSEMBLY - BODY GROUND)

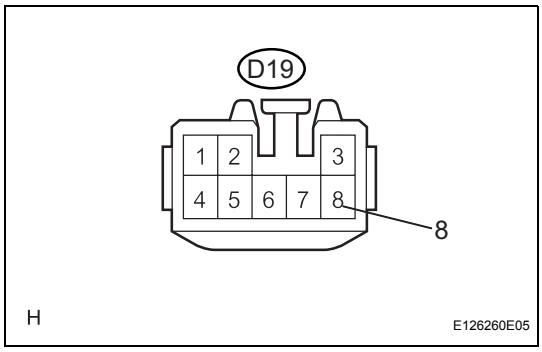

(a) Disconnect the connector of the turn signal flasher assembly.
(b) Measure the resistance according to the value(s) in the table below.

Standard resistance

Tester Connection	Condition	Specified Condition
HAZ (D19-8) - Body ground	Hazard warning switch OFF	10 kΩ or higher
HAZ (D19-8) - Body ground	Hazard warning switch ON	Below 1 Ω

NG → **Go to step 2**

OK

PROCEED TO NEXT CIRCUIT INSPECTION SHOWN IN PROBLEM SYMPTOMS TABLE

2	INSPECT HAZARD WARNING SIGNAL SWITCH ASSEMBLY

(a) Inspect hazard warning signal switch assembly (See page LI-150).
OK:
Hazard warning switch is normal.

NG → **REPLACE HAZARD WARNING SIGNAL SWITCH ASSEMBLY**

OK

REPAIR OR REPLACE HARNESS OR CONNECTOR (HAZARD WARNING SWITCH CIRCUIT)

Light Control Switch Circuit

DESCRIPTION

The combination switch ECU receives the informations of the light control switch, and sends them to each ECU via multiplex communication system.

WIRING DIAGRAM

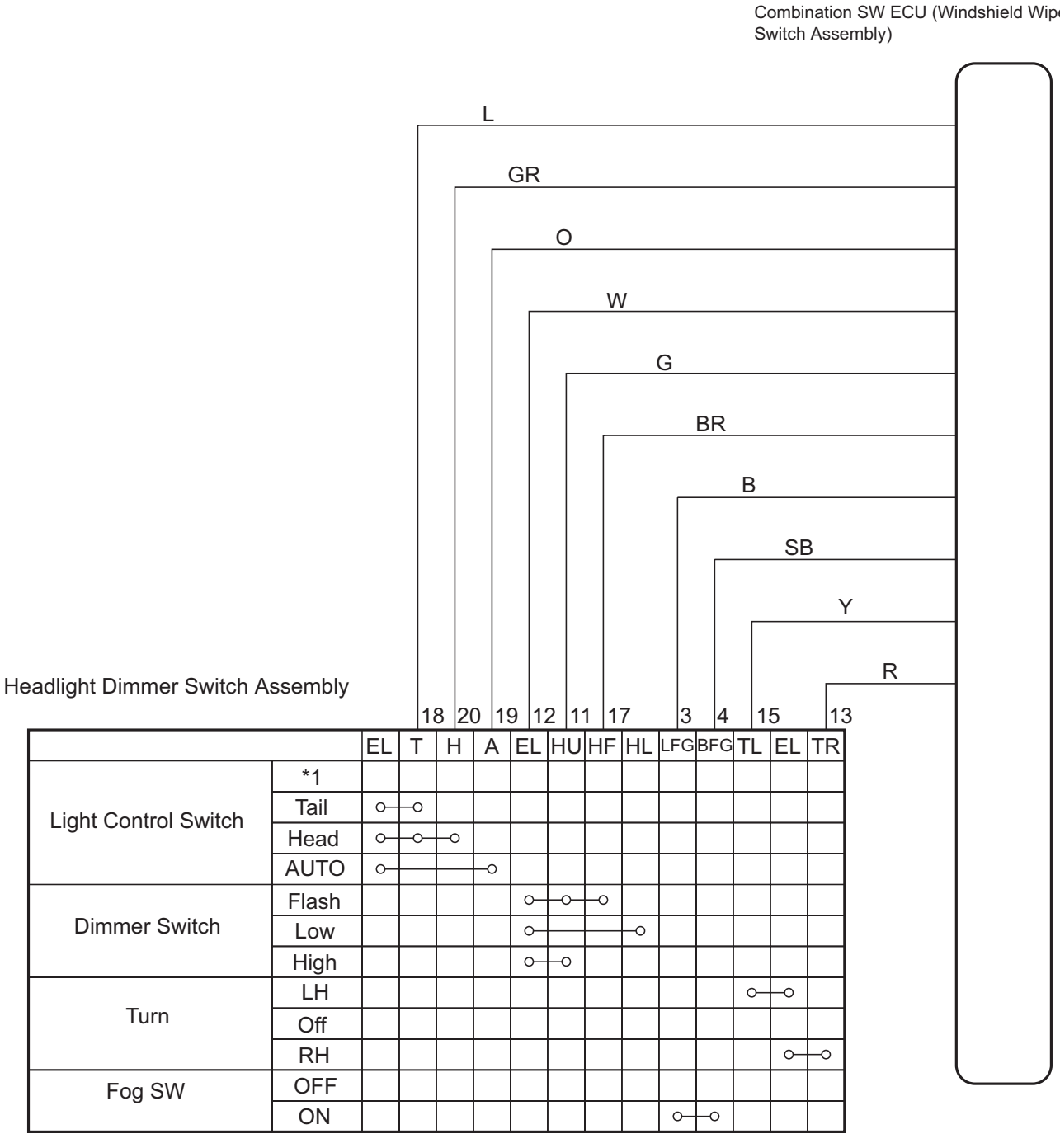

		EL	T	H	A	EL	HU	HF	HL	LFG	BFG	TL	EL	TR
Light Control Switch	*1													
	Tail	○	○											
	Head	○	○	○										
	AUTO	○			○									
Dimmer Switch	Flash					○	○	○						
	Low					○			○					
	High					○	○							
Turn	LH											○	○	
	Off													
	RH												○	○
Fog SW	OFF													
	ON									○	○			

*1: DRL OFF (USA) or OFF (Canada)

C

E126262E01

INSPECTION PROCEDURE

1	READ VALUE OF INTELLIGENT TESTER

(a) Connect the intelligent tester to the DLC3.
(b) Turn the ignition switch on (IG) and turn the intelligent tester main switch on.
(c) Select the items below in the DATA LIST, and read the displays on the intelligent tester.

COMBINATION SWITCH ECU:

Item	Measurement Item / Display (Range)	Normal Condition	Diagnostic Note
DIMMER SW	Headlight dimmer SW signal / ON or OFF	ON: Headlight dimmer switch is in the HI or FLASH position OFF: Headlight dimmer switch is in the LO position	-
HIGH FLASHER SW	Headlight dimmer SW signal / ON or OFF	ON: Headlight dimmer switch is in the FLASH position OFF: Headlight dimmer switch is in except the FLASH position	-
F FOG LIGHT SW	Front fog light SW signal / ON or OFF	ON: Front fog light switch is in the ON position OFF: Front fog light switch is in the OFF position	-
AUTO LIGHT SW	Auto light SW signal / ON or OFF	ON: Headlight dimmer switch is in the AUTO position OFF: Headlight dimmer switch is in except the AUTO position	-
HEAD LIGHT SW	Headlight control SW signal / ON or OFF	ON: Light control switch is in the HEAD position OFF: Light control switch is in except the HEAD position	-
TAIL LIGHT SW	Tail light SW signal / ON or OFF	ON: Light control switch is in the TAIL or HEAD position OFF: Light control switch is in the OFF position	-

NG → **Go to step 2**

OK →

PROCEED TO NEXT CIRCUIT INSPECTION SHOWN IN PROBLEM SYMPTOMS TABLE

2	INSPECT HEADLIGHT DIMMER SWITCH ASSEMBLY

(a) Inspect headlight dimmer switch assembly (See page LI-148).
OK:
Headlight dimmer switch assembly is normal.

NG → **REPLACE HEADLIGHT DIMMER SWITCH ASSEMBLY**

OK →

PROCEED TO NEXT CIRCUIT INSPECTION SHOWN IN PROBLEM SYMPTOMS TABLE

Headlight Signal Circuit

DESCRIPTION

The front controller receives the HEAD position signal of the light control switch.
It also receives the signal from the combination SW ECU via multiplex communication system.

WIRING DIAGRAM

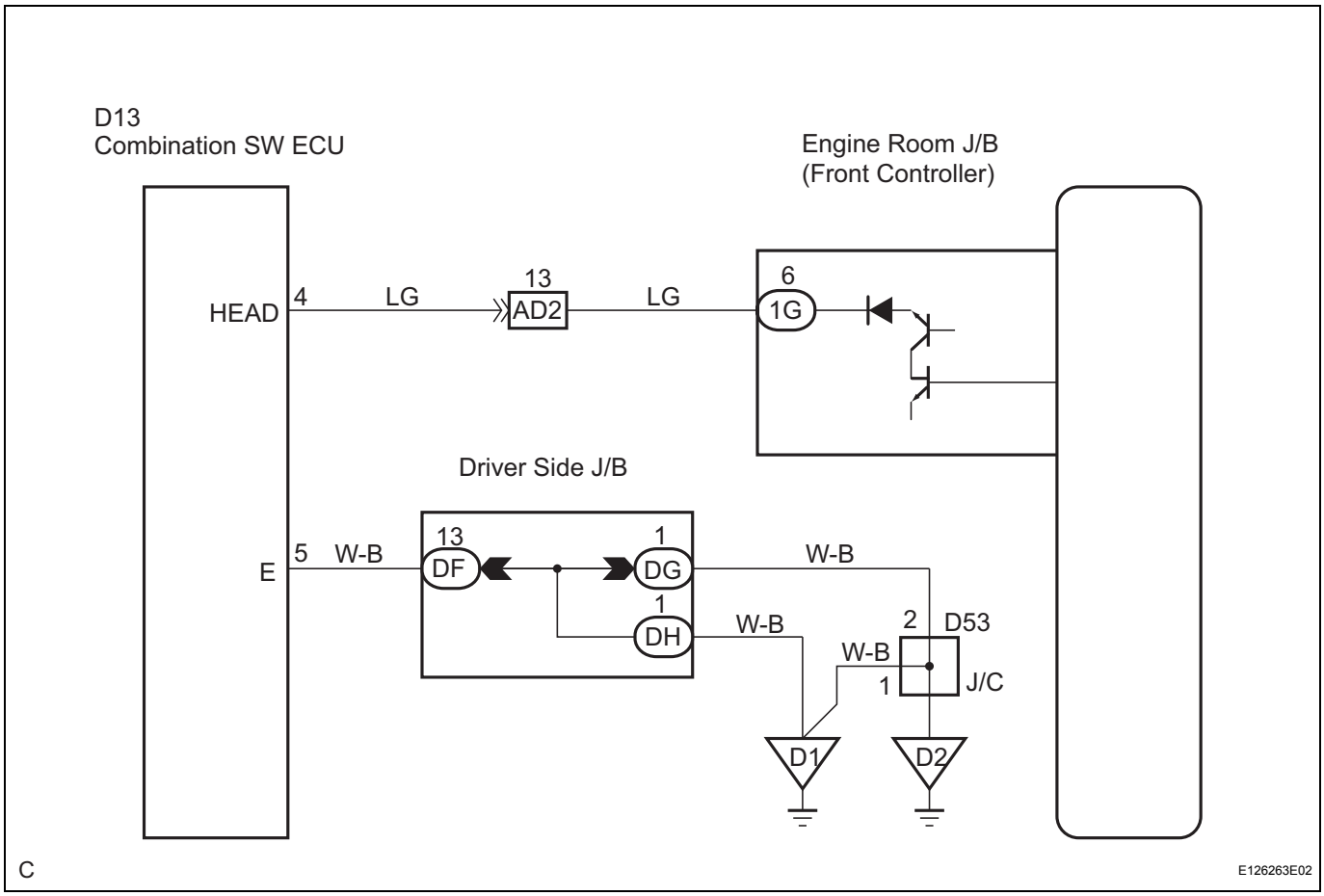

INSPECTION PROCEDURE

1	CHECK HARNESS AND CONNECTOR

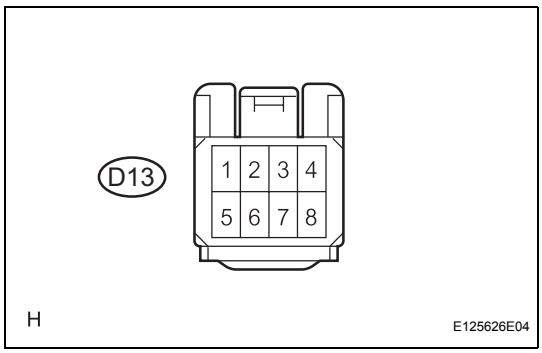

(a) Disconnect connector 1G from the driver side junction block.
(b) Disconnect the connector from the combination SW ECU.
(c) Measure the resistance according to the value(s) in the table below.

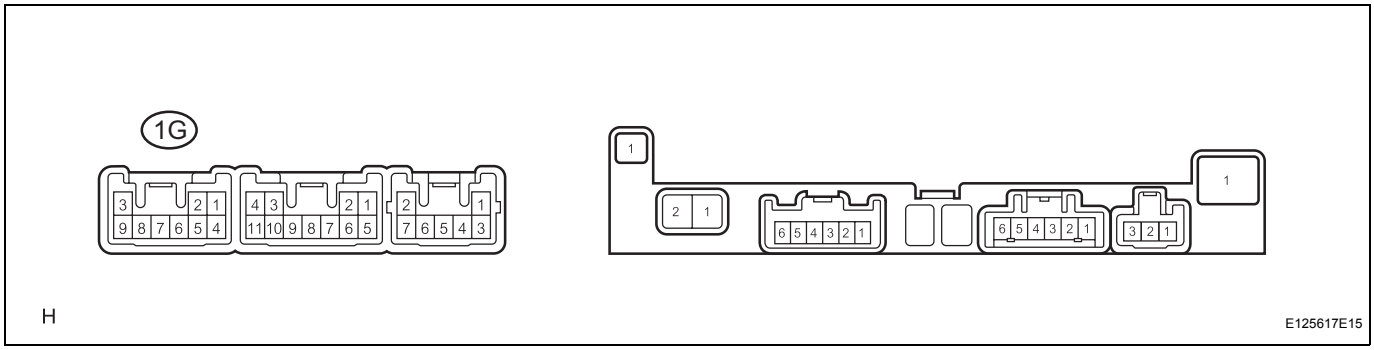

Standard resistance

Tester Connection	Condition	Specified Condition
1G-6 - D13-4	Always	Below 1 Ω

LI

NG → **REPAIR OR REPLACE HARNESS OR CONNECTOR**

OK

2 INSPECT WINDSHIELD WIPER SWITCH ASSEMBLY (COMBINATION SWITCH ECU)

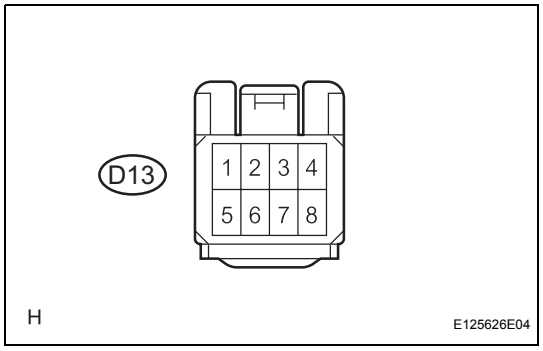

(a) Measure the resistance according to the value(s) in the table below.

Standard resistance

Tester Connection	Condition	Specified Condition
D13-4 - D13-5	Light control switch in the HEAD position	Below 1 Ω
D13-4 - D13-5	Light control switch in except the HEAD position	10 kΩ or higher

NG → **REPLACE WINDSHIELD WIPER SWITCH ASSEMBLY**

OK

3 CHECK HARNESS AND CONNECTOR (COMBINATION SWITCH ECU - BODY GROUND)

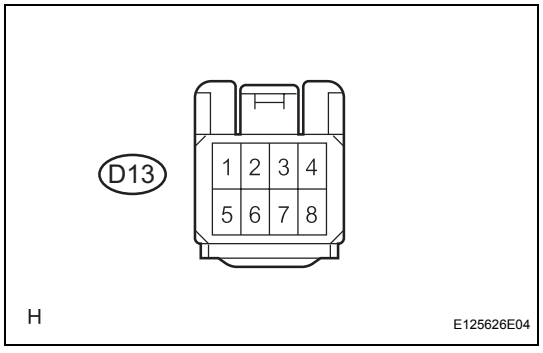

(a) Measure the resistance according to the value(s) in the table below.

Standard resistance

Tester Connection	Condition	Specified Condition
D13-5 - Body ground	Always	Below 1 Ω

NG → **REPAIR OR REPLACE HARNESS OR CONNECTOR**

OK

PROCEED TO NEXT CIRCUIT INSPECTION SHOWN IN PROBLEM SYMPTOMS TABLE

Door Courtesy Switch Circuit

DESCRIPTION

The body ECU detects the condition of the door courtesy switch assembly.

WIRING DIAGRAM

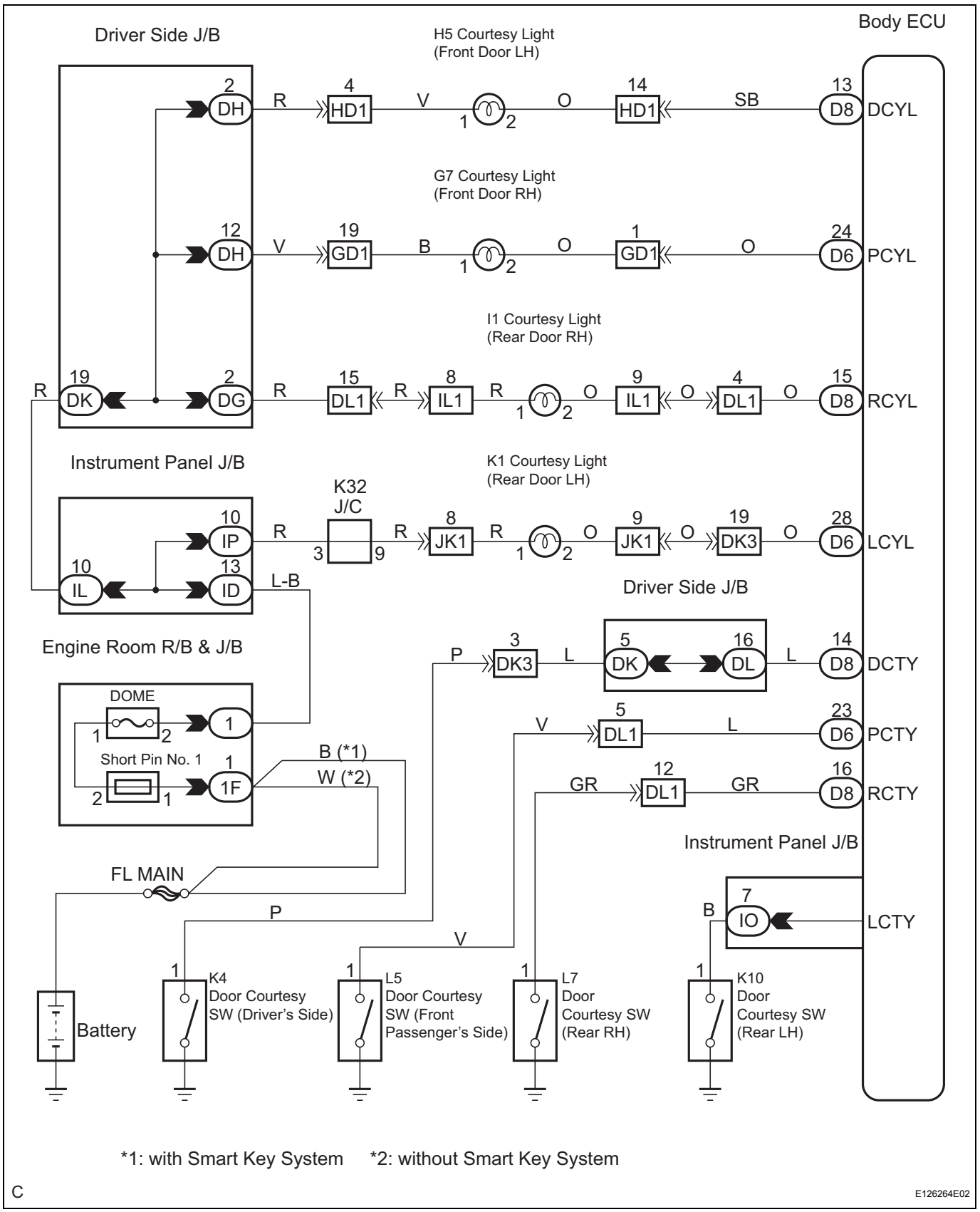

INSPECTION PROCEDURE

HINT:
Start the inspection from step 1 when using the intelligent tester, and from step 2 when not using the intelligent tester.

1 READ VALUE OF INTELLIGENT TESTER

(a) Connect the intelligent tester to the DLC3.
(b) Turn the ignition switch on (IG) and turn the intelligent tester main switch on.
(c) Select the items below in the DATA LIST, and read the displays on the intelligent tester.

BODY ECU:

Item	Measurement Item / Display (Range)	Normal Condition	Diagnostic Note
D DOR CTY SW	Driver's door courtesy SW signal / ON or OFF	ON: Driver's door is open OFF: Driver's door is closed	-
P DOR CYT SW	Passenger's door courtesy SW signal / ON or OFF	ON: Front passenger's door is open OFF: Front passenger's door is closed	-
Rr DOR CTY SW	Rear slide door courtesy SW signal / ON or OFF	ON: Either right or left rear slide door is open OFF: Both the right and left slide doors are closed	-

NG → **Go to step 3**

OK

2 CHECK HARNESS AND CONNECTOR (EACH DOOR COURTESY LIGHT CIRCUIT)

(a) Inspect the harness and connectors related to each light, referring to the wiring diagram.

NG → **REPAIR OR REPLACE HARNESS OR CONNECTOR**

OK

PROCEED TO NEXT CIRCUIT INSPECTION SHOWN IN PROBLEM SYMPTOMS TABLE

3 INSPECT DOOR COURTESY SWITCH

(a) Inspect front door courtesy switch (See page LI-152).
(b) Inspect rear door courtesy switch (See page LI-153).
OK:
Each door courtesy switch is normal.

NG → **REPLACE DOOR COURTESY SWITCH**

OK

4	CHECK HARNESS AND CONNECTOR (EACH COURTESY SWITCH CIRCUIT)

(a) Inspect the harness and connectors related to each courtesy switch, referring to the wiring diagram.

NG → **REPAIR OR REPLACE HARNESS OR CONNECTOR**

OK

PROCEED TO NEXT CIRCUIT INSPECTION SHOWN IN PROBLEM SYMPTOMS TABLE

Door LOCK Position Circuit

DESCRIPTION

This circuit detects the state of the door lock detection sensor and sends it to the body ECU.

WIRING DIAGRAM

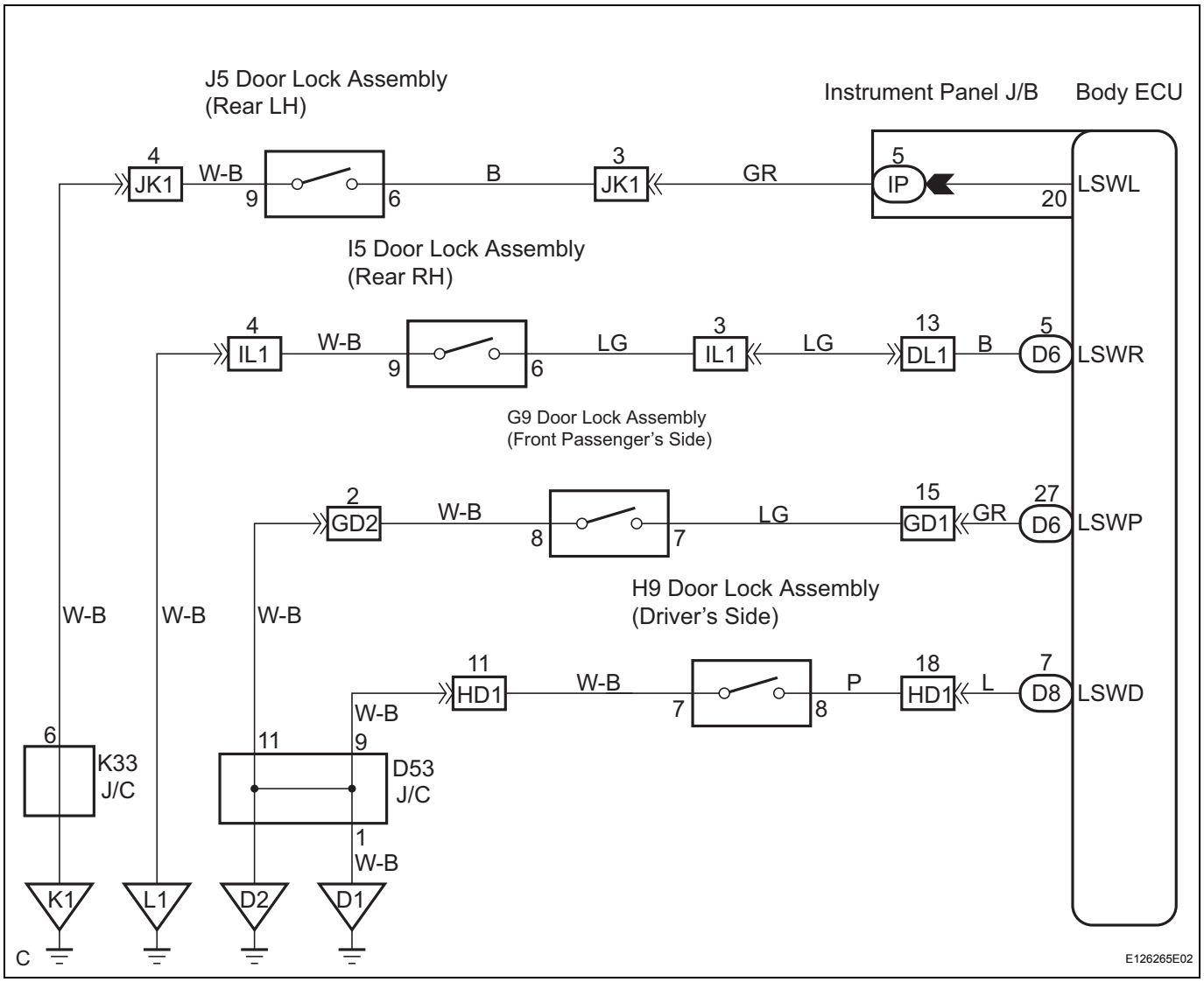

INSPECTION PROCEDURE

1	**READ VALUE OF INTELLIGENT TESTER**

(a) Connect the intelligent tester to the DLC3.
(b) Turn the ignition switch on (IG) and turn the intelligent tester main switch on.

(c) Select the items below in the DATA LIST, and read the displays on the intelligent tester.

BODY NO. 1:

Item	Measurement Item / Display (Range)	Normal Condition	Diagnostic Note
P LOCK POS SW	Front passenger's door lock position SW signal / ON or OFF	ON: Front passenger's door lock is in the unlock position OFF: Front passenger's door lock is in the lock position	-
Rr. LOCK POS SW	Rear slide door lock position SW signal / ON or OFF	ON: Rear slide door lock is in the unlock position OFF: Rear slide door lock is in the lock position	-
D LOCK POS SW	Driver's door lock position SW signal / ON or OFF	ON: Door lock is in the unlock position OFF: Door lock is in the lock position	-

LI

NG → **Go to step 2**

OK

PROCEED TO NEXT CIRCUIT INSPECTION SHOWN IN PROBLEM SYMPTOMS TABLE

2	**INSPECT INSTRUMENT PANEL JUNCTION BLOCK ASSEMBLY**

(a) Measure the voltage according to the value(s) in the table below.

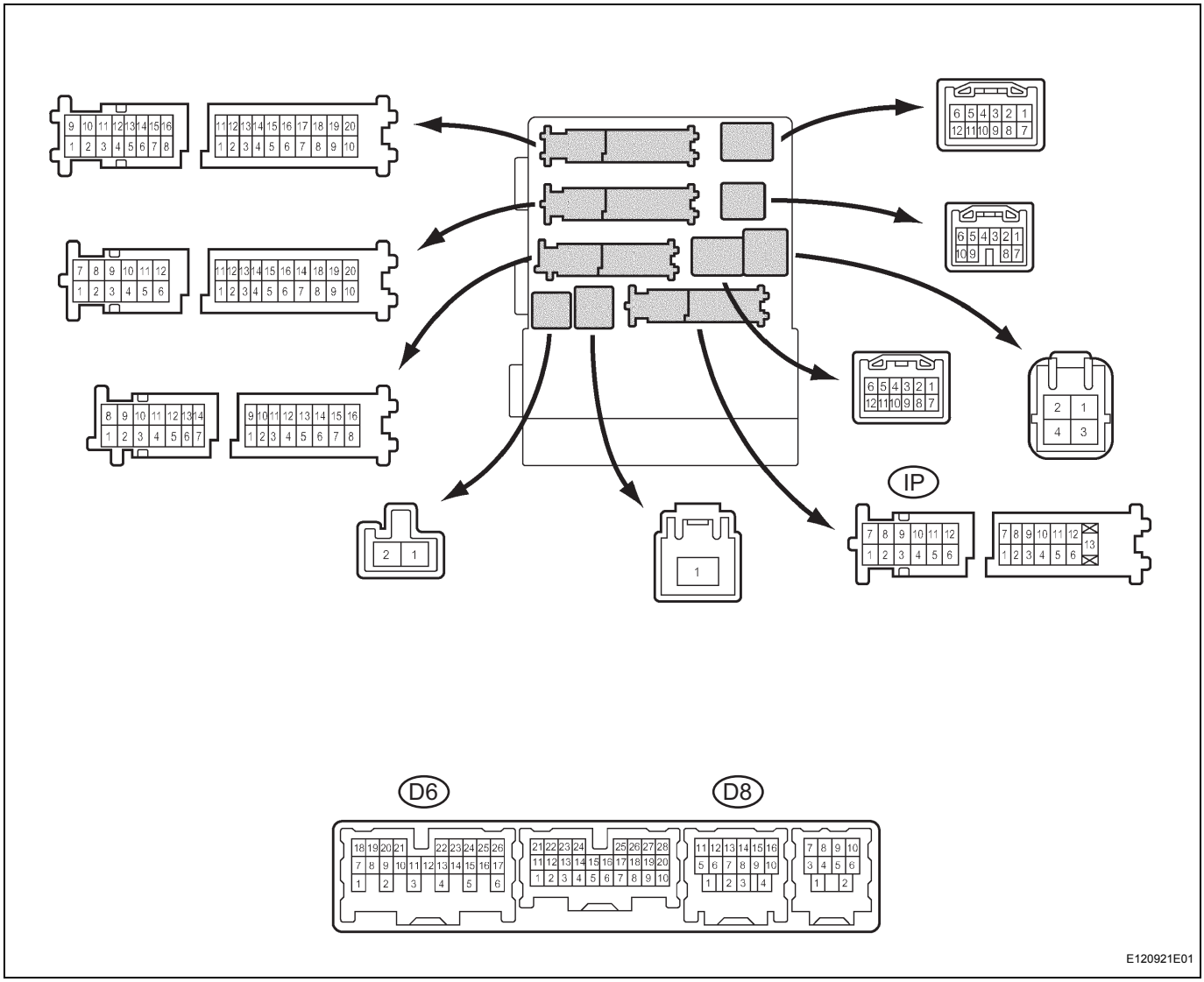

Standard voltage

Tester Connection	Condition	Specified Condition
D6-27 - Body ground	Front passenger door locked → unlocked	Below 1 V → 10 to 14 V
D8-7 - Body ground	Front driver door locked → unlocked	Below 1 V → 10 to 14 V
D6-5 - Body ground	Rear RH door locked → unlocked	Below 1 V → 10 to 14 V
IP-5 - Body ground	Rear LH door locked → unlocked	Below 1 V → 10 to 14 V

NG → **GO TO POWER DOOR LOCK CONTROL SYSTEM**

OK

PROCEED TO NEXT CIRCUIT INSPECTION SHOWN IN PROBLEM SYMPTOMS TABLE

Luggage Room Light Circuit

DESCRIPTION

The body ECU receives luggage compartment door information, and turns on the luggage compartment light.

WIRING DIAGRAM

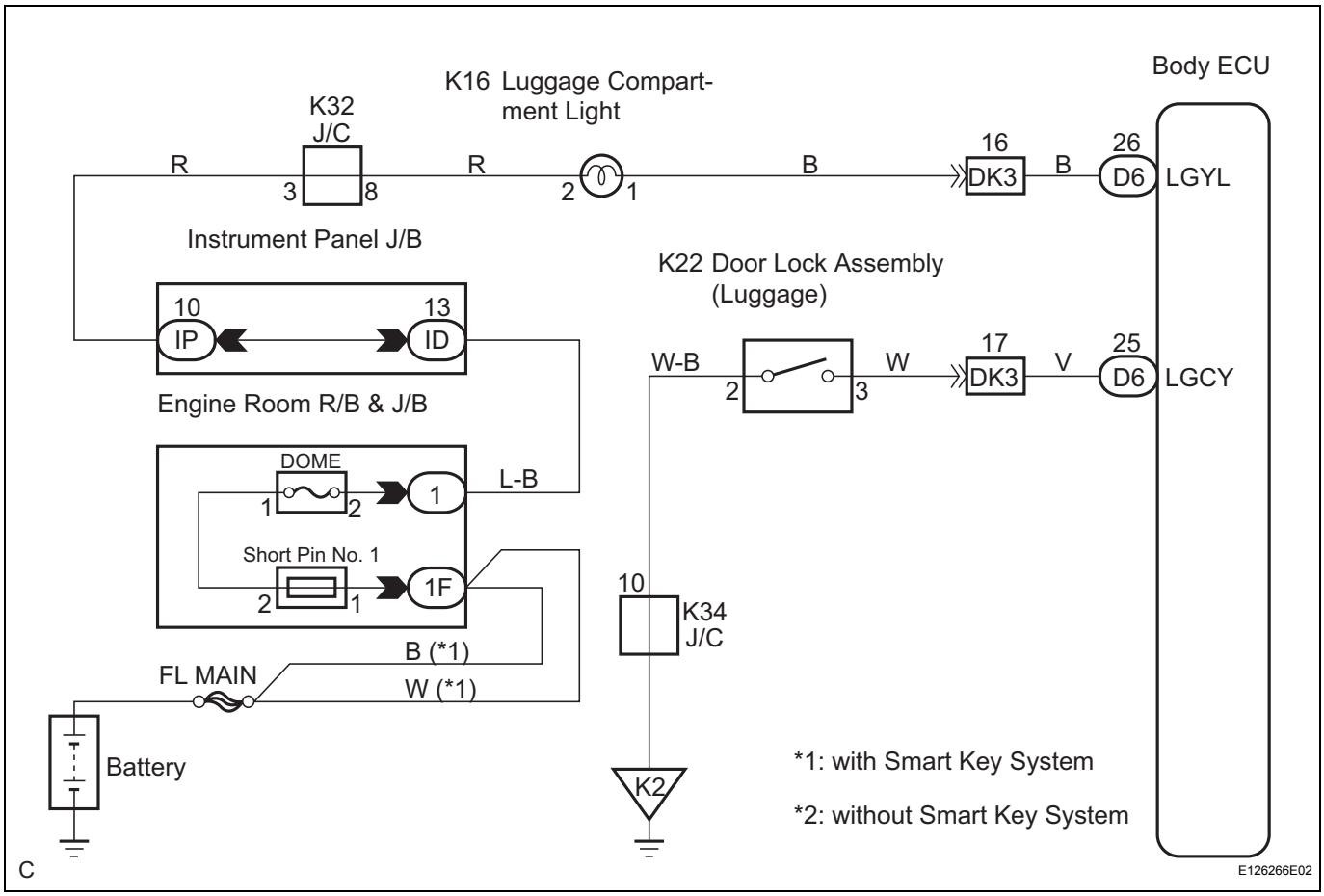

INSPECTION PROCEDURE

1	READ VALUE OF INTELLIGENT TESTER

(a) Connect the intelligent tester to the DLC3.
(b) Turn the ignition switch on (IG) and turn the intelligent tester main switch on.
(c) Select the item below in the DATA LIST, and read the displays on the intelligent tester.

BODY ECU:

Item	Measurement Item / Display (Range)	Normal Condition	Diagnostic Note
Luggage Courtesy Switch	Luggage courtesy / ON or OFF	ON: Luggage compartment door is open OFF: Luggage compartment door is closed	-

OK:

ON and OFF can be displayed in accordance with the luggage compartment door condition.

OK → Go to step 4

NG

2	INSPECT LUGGAGE COMPARTMENT DOOR LOCK ASSEMBLY

(a) Inspect luggage compartment door lock assembly (See page LI-154).
OK:
Luggage compartment door lock assembly is normal.

NG → REPLACE LUGGAGE COMPARTMENT DOOR LOCK ASSEMBLY

OK

3	CHECK HARNESS AND CONNECTOR (INSTRUMENT PANEL J/B ASSEMBLY - BODY GROUND)

(a) Disconnect the D6 connector from body ECU.
(b) Measure the resistance according to the value(s) in the table below.

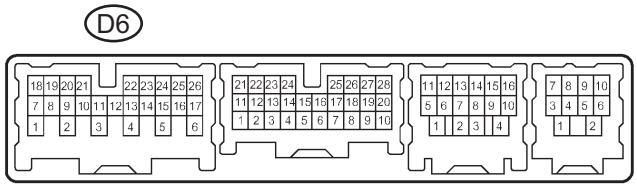

E068632E17

Standard resistance

Tester Connection	Condition	Specified Condition
D6-25 - Body ground	Luggage compartment door is open	Below 1 Ω
D6-25 - Body ground	Luggage compartment door is closed	10 kΩ or higher

NG → REPAIR OR REPLACE HARNESS OR CONNECTOR

OK

4	CHECK HARNESS AND CONNECTOR (BATTERY - INSTRUMENT PANEL J/B ASSEMBLY)

(a) Using a service wire, connect terminal D6-26 on the wire harness side and body ground.

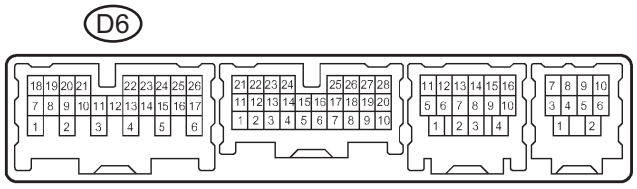

E068632E17

OK:

Luggage room light comes on.

LI

NG → **REPAIR OR REPLACE HARNESS OR CONNECTOR**

OK

PROCEED TO NEXT CIRCUIT INSPECTION SHOWN IN PROBLEM SYMPTOMS TABLE

Generator Signal Circuit

DESCRIPTION

The front controller receives an engine condition signal via the generator.

WIRING DIAGRAM

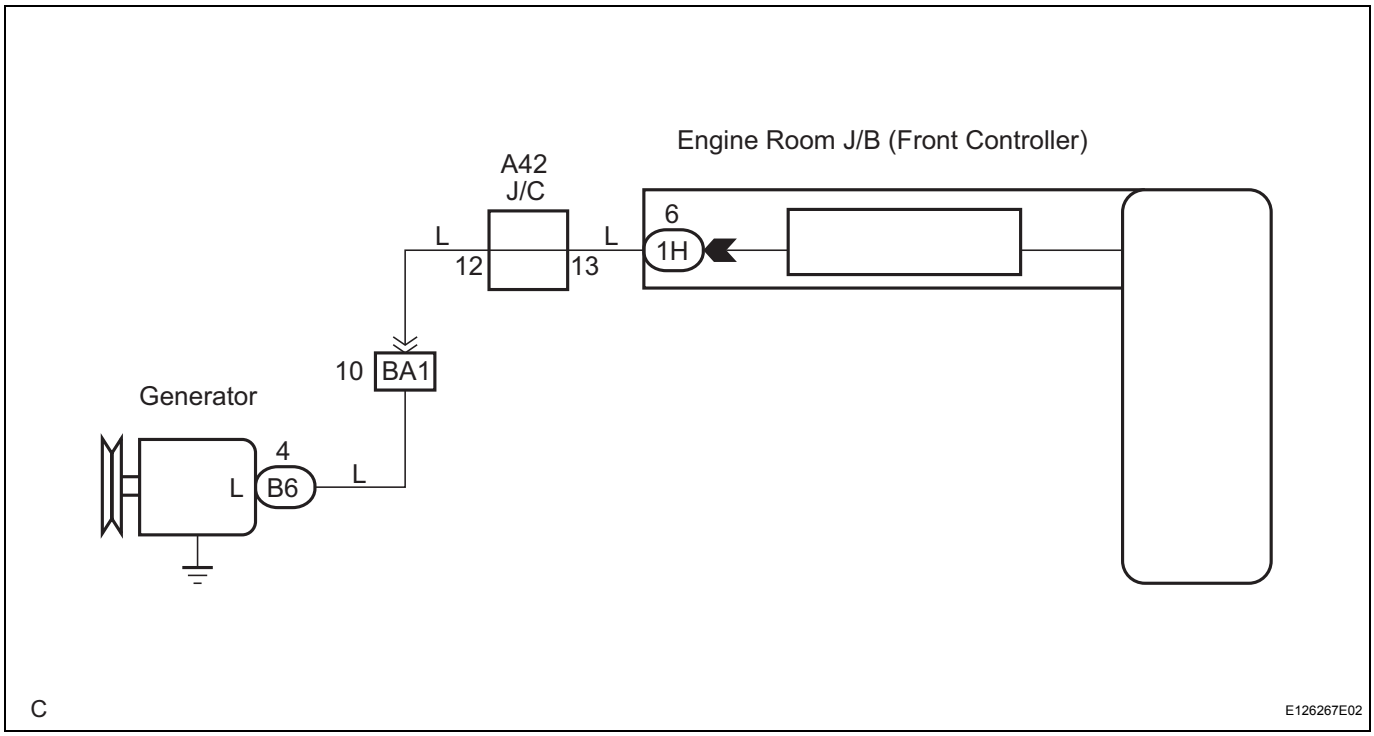

INSPECTION PROCEDURE

1	READ VALUE OF INTELLIGENT TESTER

(a) Connect the intelligent tester to the DLC3.
(b) Turn the ignition switch on (IG) and turn the intelligent tester main switch on.
(c) Select the item below in the DATA LIST, and read the displays on the intelligent tester.

BODY ECU:

Item	Measurement Item / Display (Range)	Normal Condition	Diagnostic Note
ALT L SIGNAL	Alternator L terminal signal / ON or OFF	ON: Engine start OFF: Except engine start	-

NG → **Go to step 2**

OK

PROCEED TO NEXT CIRCUIT INSPECTION SHOWN IN PROBLEM SYMPTOMS TABLE

2	INSPECT GENERATOR ASSEMBLY

(a) Inspect generator assembly (See page CH-12).
OK:
Generator assembly is normal.

NG → **CHECK AND REPLACE GENERATOR ASSEMBLY**

OK

3	CHECK HARNESS AND CONNECTOR (GENERATOR - FRONT CONTROLLER)

(a) Measure the voltage according to the value(s) in the table below.

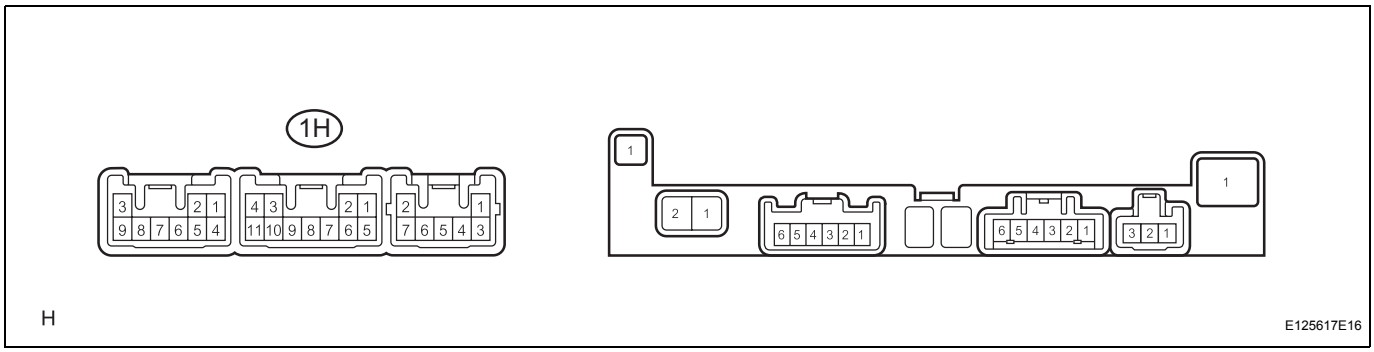

Standard voltage

Tester Connection	Condition	Specified Condition
1H-6 - Body ground	Engine running	10 to 14 V

NG → **REPAIR OR REPLACE HARNESS OR CONNECTOR**

OK

PROCEED TO NEXT CIRCUIT INSPECTION SHOWN IN PROBLEM SYMPTOMS TABLE

Illumination Circuit

DESCRIPTION

The multiplex network body ECU controls the following illumination lights.

1. Ignition key cylinder light (w/o Smart Entry System)
2. Front interior light installed in personal light assembly

WIRING DIAGRAM

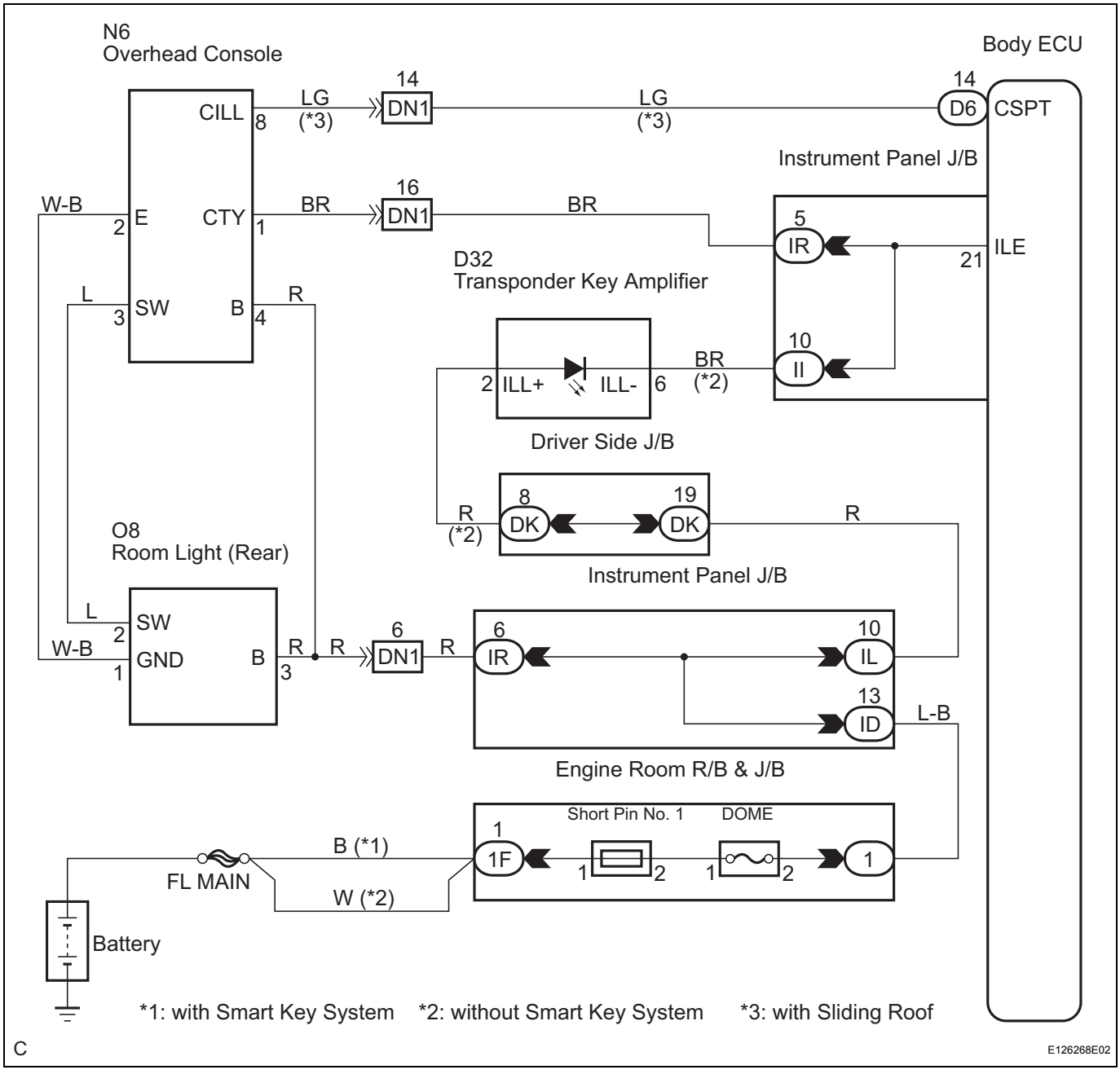

INSPECTION PROCEDURE

1	PERFORM ACTIVE TEST BY INTELLIGENT TESTER

(a) Connect the intelligent tester to the DLC3.

(b) Turn the ignition switch on (IG) and turn the intelligent tester main switch on.
(c) Select the item below in the ACTIVE TEST and then check the item operates.

BODY ECU:

Item	Test Details	Diagnostic Note
ILLUMI OUTPUT	(Test Details) Turn the interior light and key illumination ON / OFF (Vehicle Condition) Interior light SW is in the door position and all doors are closed	-

NG → **Go to step 2**

OK

PROCEED TO NEXT CIRCUIT INSPECTION SHOWN IN PROBLEM SYMPTOMS TABLE

2 INSPECT INTERIOR LIGHT

(a) Inspect ignition key cylinder light (See page LI-144).
(b) Inspect personal light assembly (See page LI-140).
OK:
Each light is normal.

NG → **REPLACE INTERIOR LIGHT**

OK

3 INSPECT INSTRUMENT PANEL JUNCTION BLOCK ASSEMBLY

(a) Measure the voltage according to the value(s) in the table below.

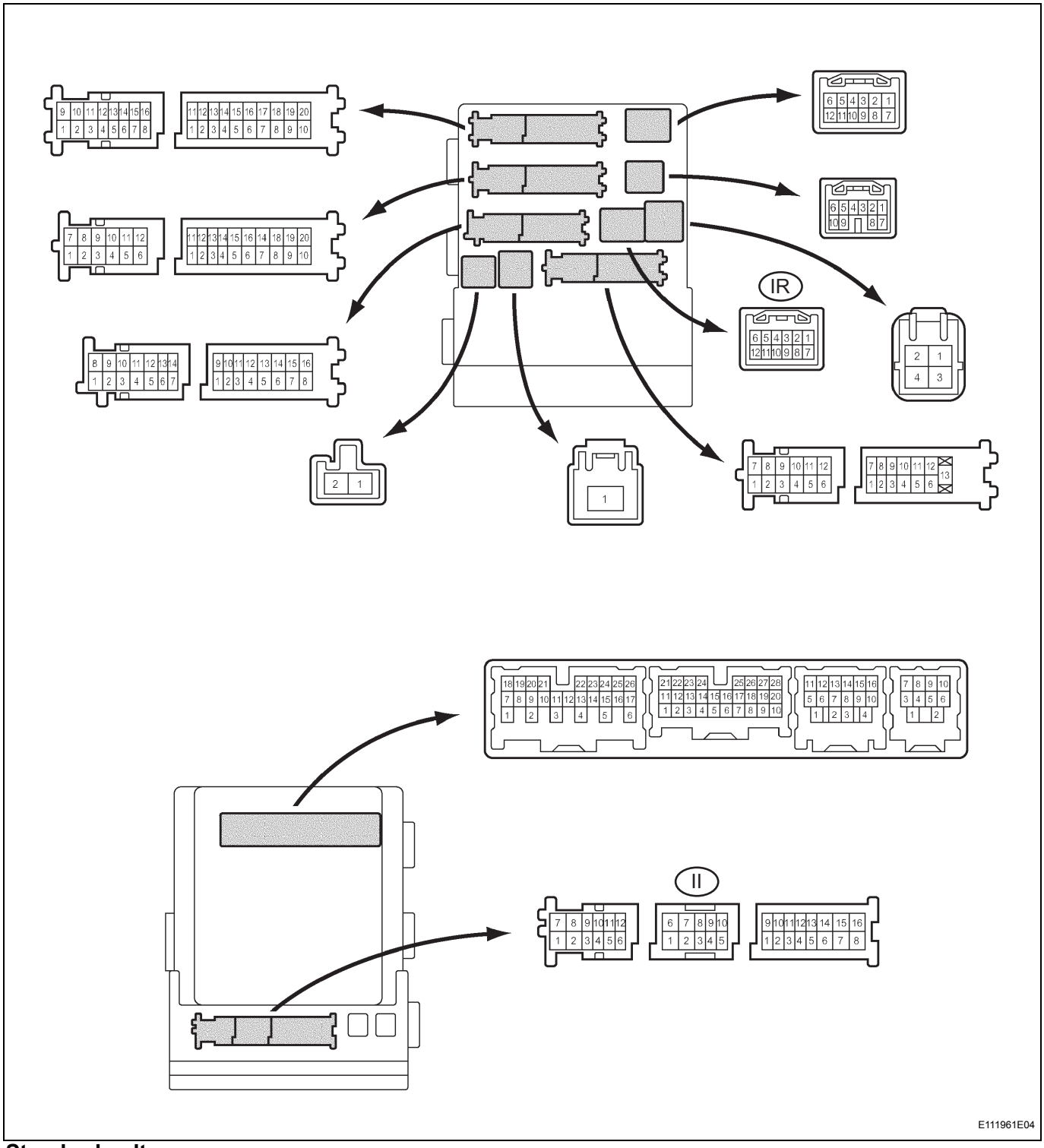

Standard voltage

Tester Connection	Condition	Specified Condition
II-10 - Body ground	All door is closed → Front or rear door is open	10 to 14 V → Below 1 V
IR-5 - Body ground	All door is closed → Front or rear door is open	10 to 14 V → Below 1 V

NG → **REPAIR OR REPLACE HARNESS OR CONNECTOR (EACH ILLUMINATE CIRCUIT)**

OK

PROCEED TO NEXT CIRCUIT INSPECTION SHOWN IN PROBLEM SYMPTOMS TABLE

Parking Brake Switch Circuit

DESCRIPTION

The body ECU receives the parking brake switch signal.

WIRING DIAGRAM

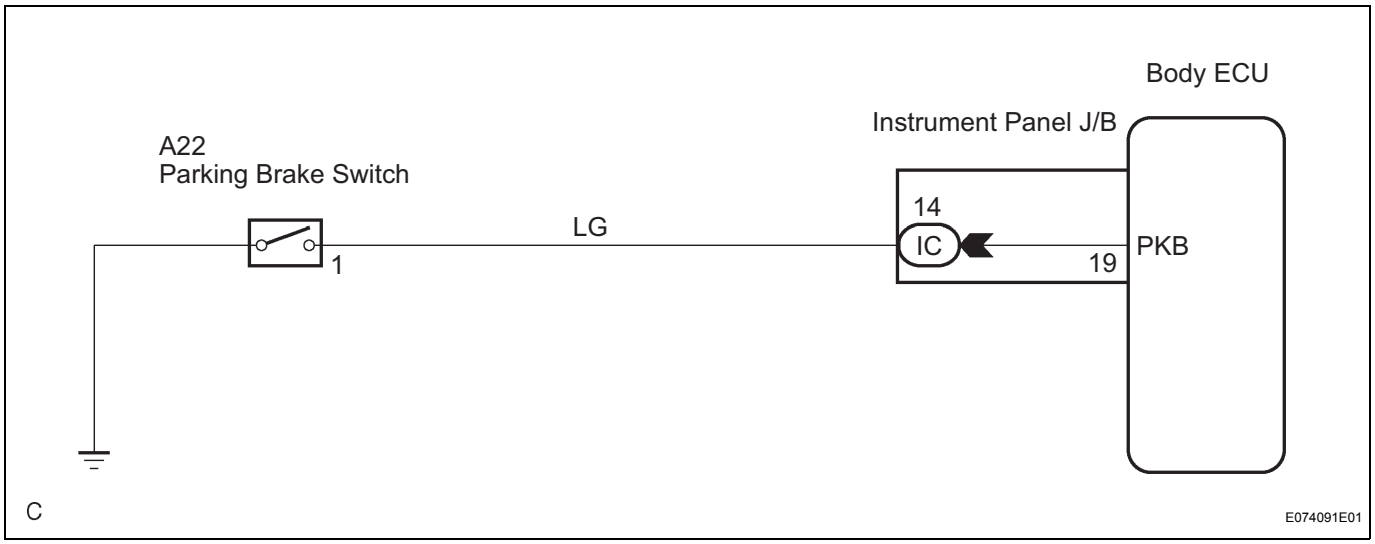

INSPECTION PROCEDURE

1	READ VALUE OF INTELLIGENT TESTER

(a) Connect the intelligent tester to the DLC3.
(b) Turn the ignition switch on (IG) and turn the intelligent tester main switch on.
(c) Select the item below in the DATA LIST, and read the displays on the intelligent tester.

BODY ECU:

Item	Measurement Item / Display (Range)	Normal Condition	Diagnostic Note
PARKING BRAKE SW	Parking brake / OFF or ON	ON: Parking brake pedal is ON OFF: Parking brake pedal is OFF	-

NG → **Go to step 2**

OK →

PROCEED TO NEXT CIRCUIT INSPECTION SHOWN IN PROBLEM SYMPTOMS TABLE

2	INSPECT PARKING BRAKE SWITCH ASSEMBLY

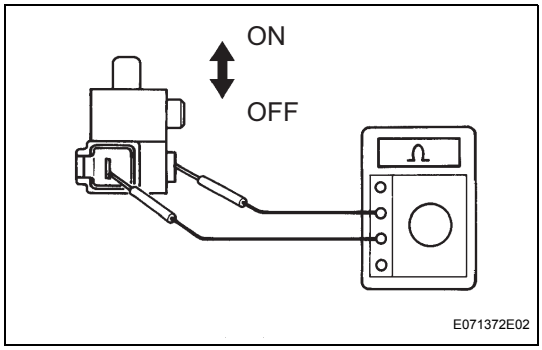

(a) Remove the parking brake switch.
(b) Measure the resistance according to the value(s) in the table below.

Standard resistance

Tester Connection	Condition	Specified Condition
1 - Switch body	OFF (When shaft is pressed)	10 kΩ or higher
1 - Switch body	ON (When shaft is not pressed)	Below 1 Ω

NG → REPLACE PARKING BRAKE SWITCH ASSEMBLY

OK

3	CHECK HARNESS AND CONNECTOR (INSTRUMENT PANEL JUNCTION BLOCK ASSEMBLY - BODY GROUND)

(a) Disconnect connector IC from the instrument panel junction block assembly.
(b) Measure the resistance according to the value(s) in the table below.

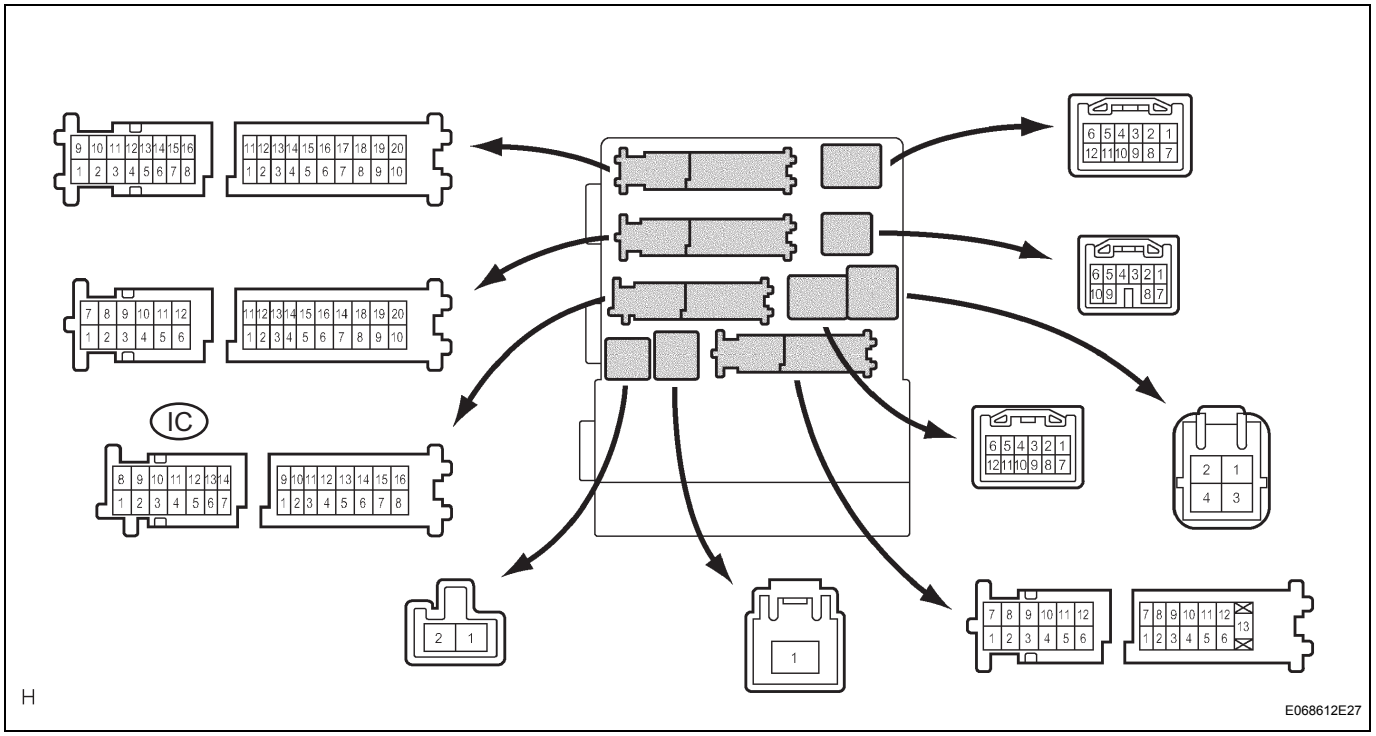

Standard resistance

Tester Connection	Condition	Specified Condition
IC-14 - Body ground	Shaft of parking brake switch is pressed	10 kΩ or higher
IC-14 - Body ground	Shaft of parking brake switch is not pressed	Below 1 Ω

NG → **REPAIR OR REPLACE HARNESS OR CONNECTOR**

OK

PROCEED TO NEXT CIRCUIT INSPECTION SHOWN IN PROBLEM SYMPTOMS TABLE

Taillight Relay Circuit

DESCRIPTION

The body ECU controls the TAIL relay when a signal is received from the headlight dimmer switch assembly.

WIRING DIAGRAM

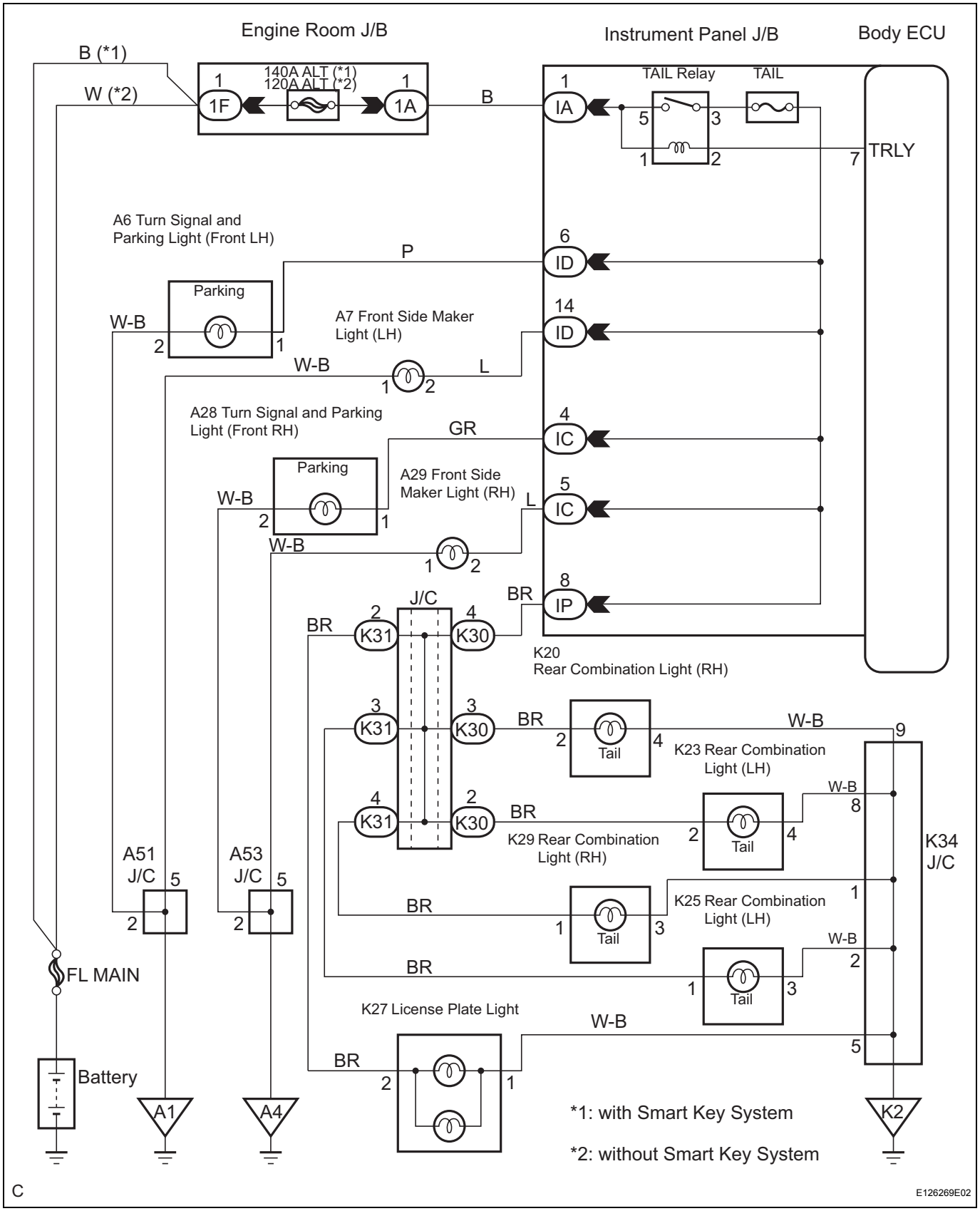

INSPECTION PROCEDURE

1	PERFORM ACTIVE TEST BY INTELLIGENT TESTER

(a) Connect the intelligent tester to the DLC3.
(b) Turn the ignition switch on (IG) and turn the intelligent tester main switch on.
(c) Select the item below in the ACTIVE TEST and then check that the relay operation.

BODY NO. 1:

Item	Test Details	Diagnostic Note
TAIL LIGHT	Turn the tail light relay ON / OFF	-

OK:
Tail lights come on.

NG → **Go to step 2**

OK

PROCEED TO NEXT CIRCUIT INSPECTION SHOWN IN PROBLEM SYMPTOMS TABLE

2	INSPECT RELAY

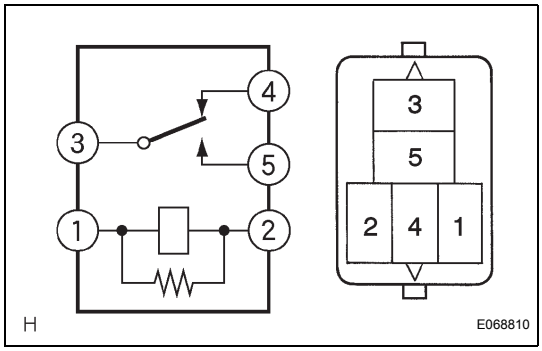

(a) Inspect TAIL relay continuity.
(1) Remove the tail relay from the instrument panel J/B.
(2) Measure the resistance according to the value(s) in the table below.
Standard resistance

Tester Connection	Specified Condition
3 - 5	10 kΩ or higher
3 - 5	Below 1 Ω (When battery voltage is applied to terminal 1- 2)
3 - 4	Below 1 Ω (When battery voltage is applied to terminal 1- 2)

NG → **REPLACE RELAY**

OK

3	CHECK HARNESS AND CONNECTOR (BATTERY - INSTRUMENT PANEL JUNCTION BLOCK ASSEMBLY)

(a) Measure the voltage according to the value(s) in the table below.

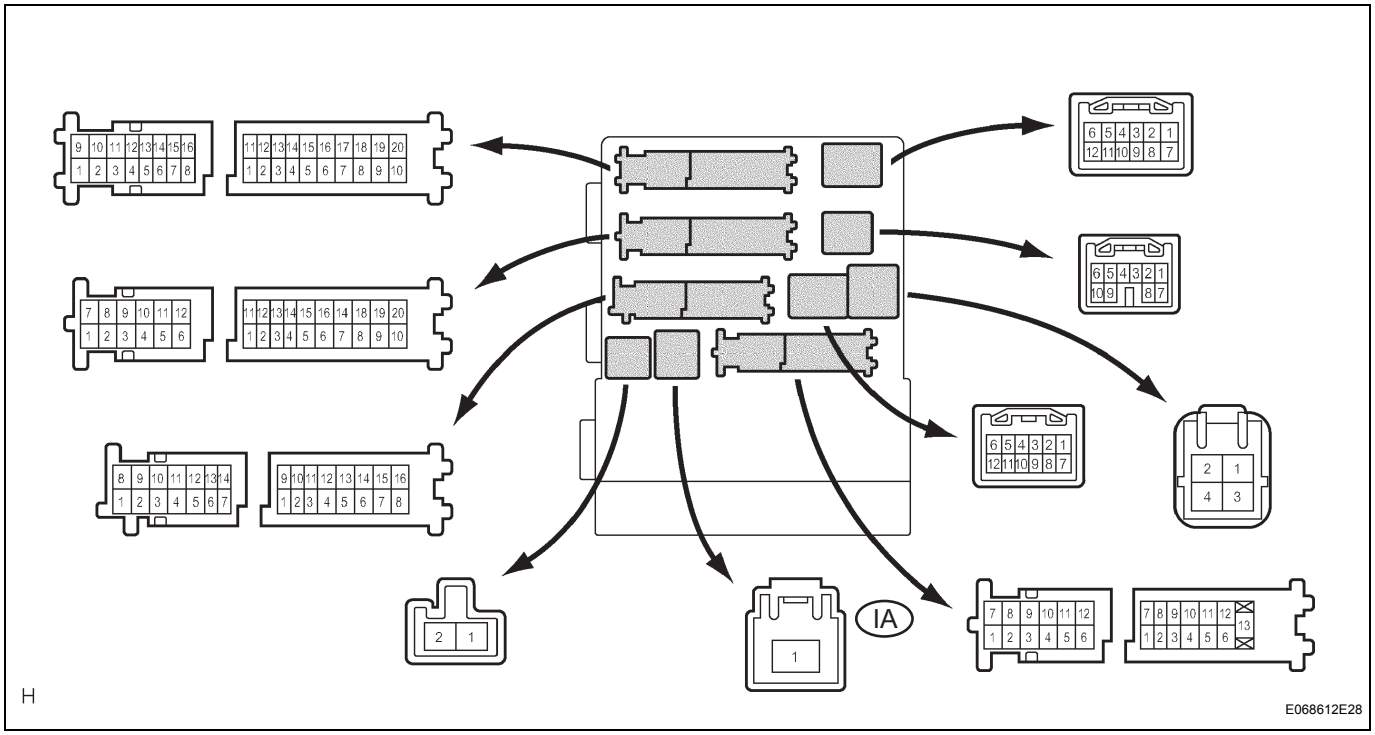

Standard voltage

Tester Connection	Condition	Specified Condition
IA-1 - Body ground	Always	10 to 14 V

NG → **REPAIR OR REPLACE HARNESS OR CONNECTOR**

OK

4	INSPECT INSTRUMENT PANEL JUNCTION BLOCK ASSEMBLY

(a) Measure the voltage according to the value(s) in the table below.

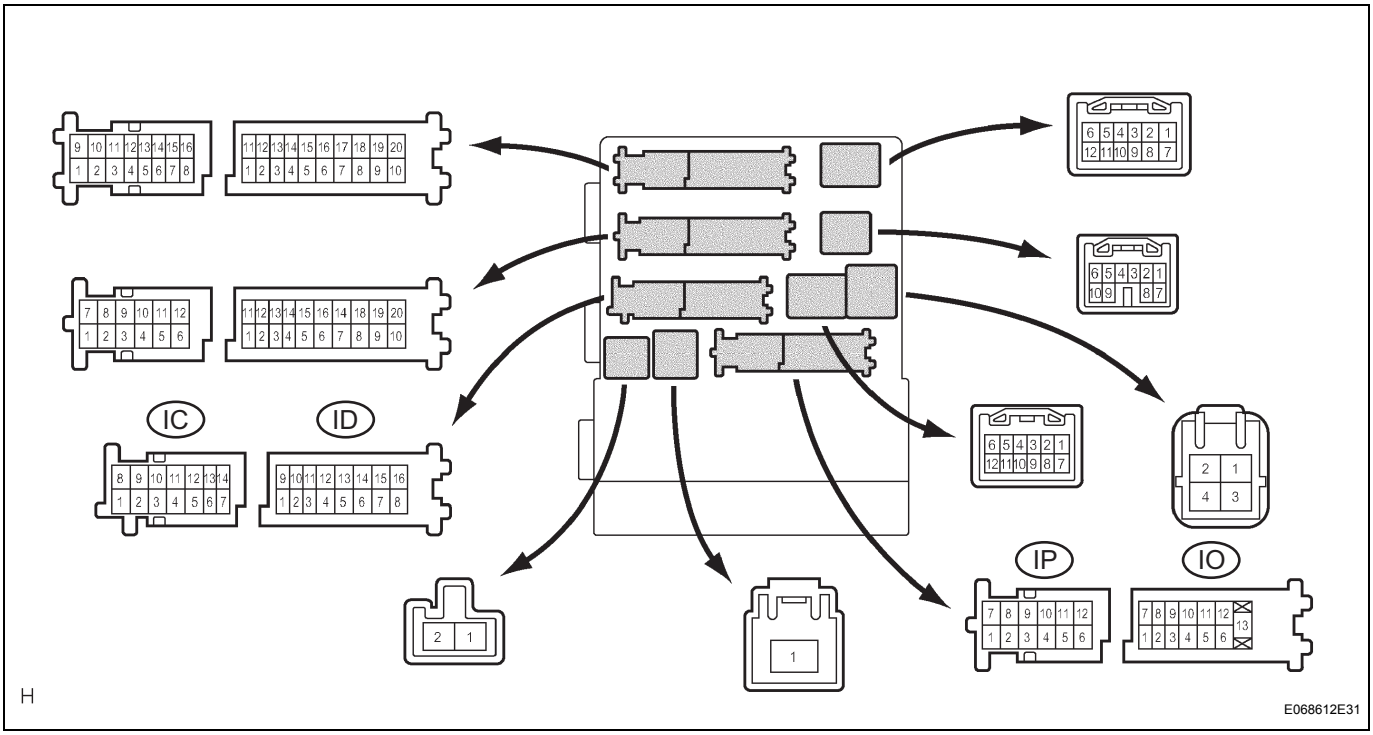

Standard voltage

Tester Connection	Condition	Specified Condition
IC-4 - Body ground	Light control switch OFF → TAIL	Below 1 V → 10 to 14 V
IC-5 - Body ground	Light control switch OFF → TAIL	Below 1 V → 10 to 14 V
ID-6 - Body ground	Light control switch OFF → TAIL	Below 1 V → 10 to 14 V
ID-14 - Body ground	Light control switch OFF → TAIL	Below 1 V → 10 to 14 V
IP-8 - Body ground	Light control switch OFF → TAIL	Below 1 V → 10 to 14 V
IO-9 - Body ground	Ignition switch on (IG)	Below 1 V → 10 to 14 V

NG → **PROCEED TO NEXT CIRCUIT INSPECTION SHOWN IN PROBLEM SYMPTOMS TABLE**

OK

REPAIR OR REPLACE HARNESS OR CONNECTOR (EACH TAILLIGHT CIRCUIT)

Headlight Beam Level Control ECU Communication Circuit

DESCRIPTION

The headlight beam level control ECU receives HEAD signal from the front controller and receives engine condition (ON or OFF) from the generator. It also receives vehicle speed signal from the skid control ECU, thus controlling the headlight beam level control motor.

WIRING DIAGRAM

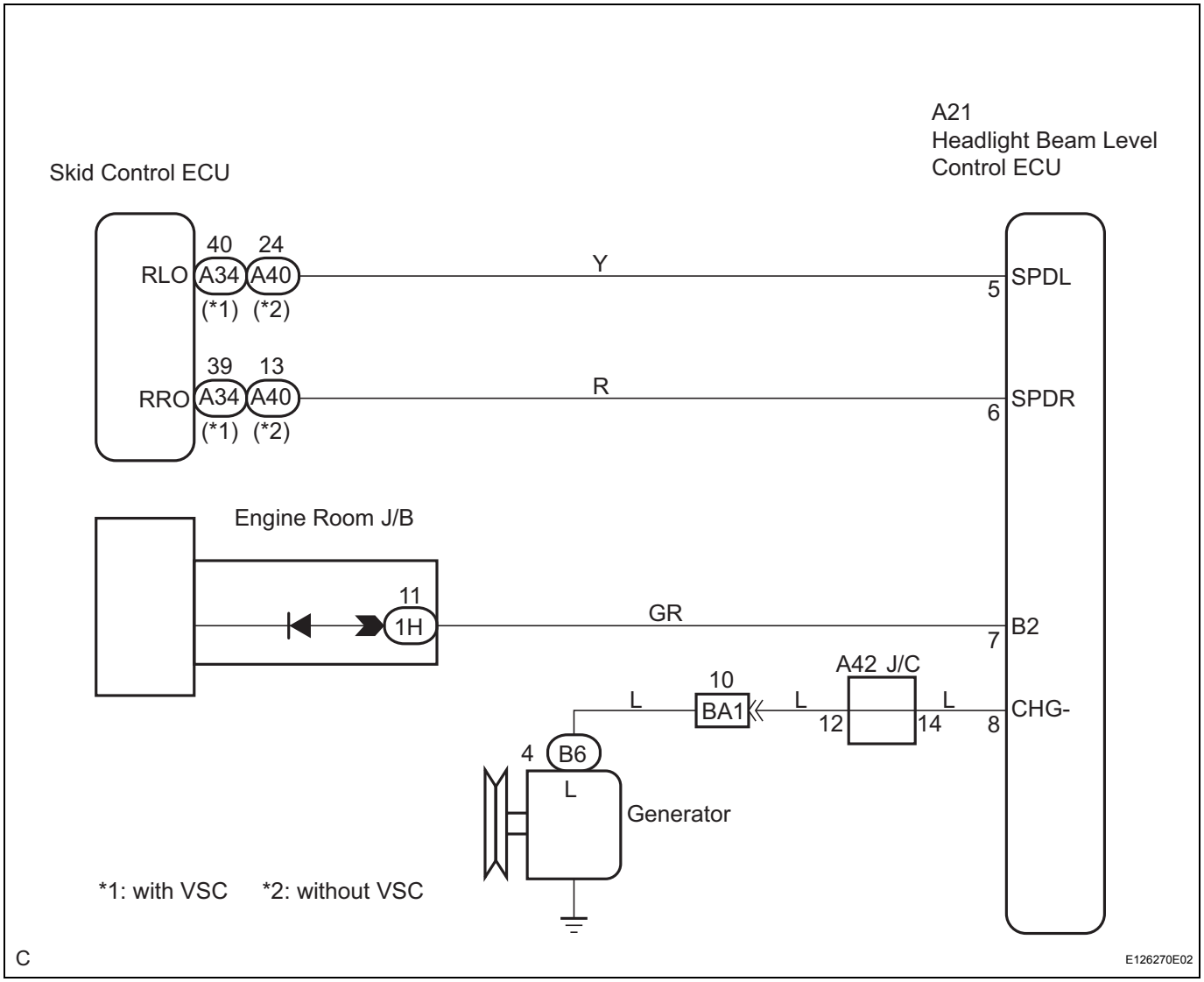

INSPECTION PROCEDURE

1	CHECK HARNESS AND CONNECTOR (FRONT CONTROLLER - HEADLIGHT BEAM LEVEL CONTROL ECU)

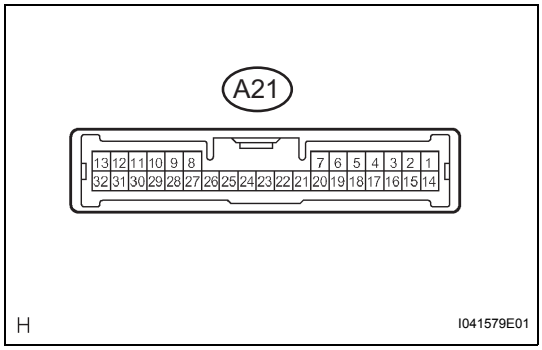

(a) Disconnect connector 1H from the front controller.
(b) Disconnect the headlight beam level control ECU connector.
(c) Measure the resistance according to the value(s) in the table below.

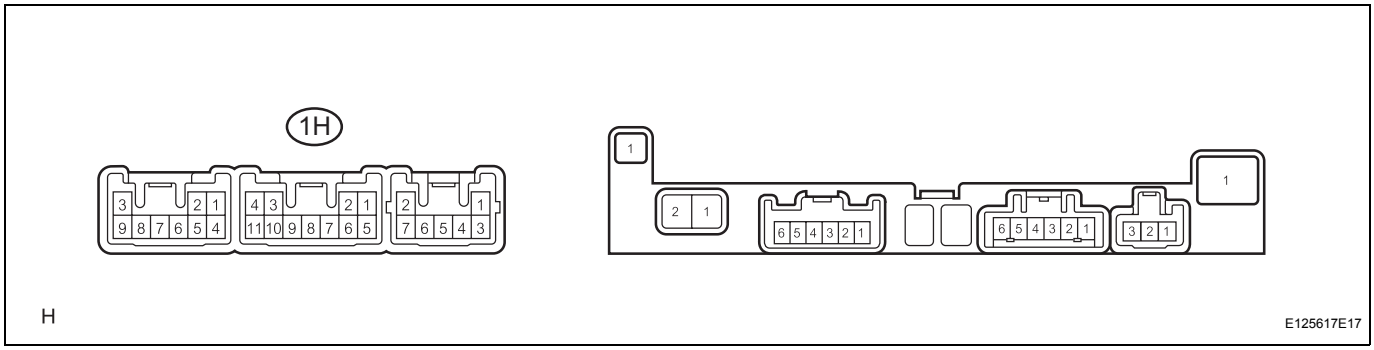

Standard resistance

Tester Connection	Condition	Specified Condition
A21-7 - 1H-11	Always	Below 1 Ω
A21-7 - Body ground	Always	10 kΩ or higher

NG → **REPAIR OR REPLACE HARNESS OR CONNECTOR**

OK

2	CHECK HARNESS AND CONNECTOR (SKID CONTROL ECU - HEADLIGHT BEAM LEVEL CONTROL ECU)

without VSC:

Skid Control ECU Wire Harness View:

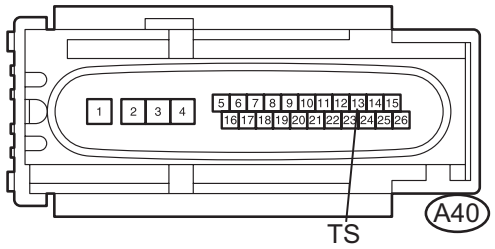

Headlight Beam Level Control ECU Wire Harness View:

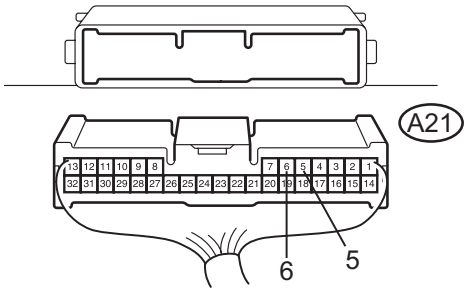

with VSC:

Skid Control ECU Wire Harness View:

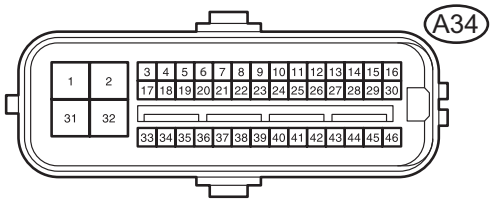

Headlight Beam Level Control ECU Wire Harness View:

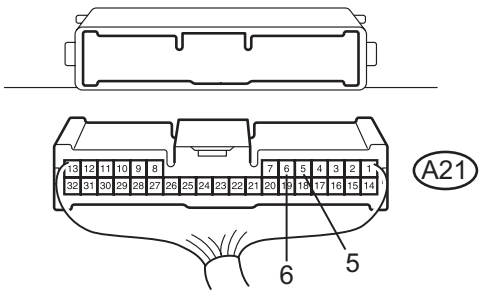

N

E126271E02

OK

(a) Disconnect the headlight beam level control ECU connector and the skid control ECU connector.

(b) Measure the resistance according to the value(s) in the table below.

Standard resistance:

without VSC

Tester Connection	Condition	Specified Condition
A21-6 - A40-13	Always	Below 1 Ω
A21-5 - A40-24	Always	Below 1 Ω
A21-6 - Body ground	Always	10 kΩ or higher
A21-5 - Body ground	Always	10 kΩ or higher

with VSC

Tester Connection	Condition	Specified Condition
A21-6 - A34-39	Always	Below 1 Ω
A21-5 - A34-40	Always	Below 1 Ω
A21-6 - Body ground	Always	10 kΩ or higher
A21-5 - Body ground	Always	10 kΩ or higher

NG → **REPAIR OR REPLACE HARNESS OR CONNECTOR**

LI

3	**CHECK HARNESS AND CONNECTOR (GENERATOR ASSEMBLY - HEADLIGHT BEAM LEVEL CONTROL ECU)**

Wire Harness View:

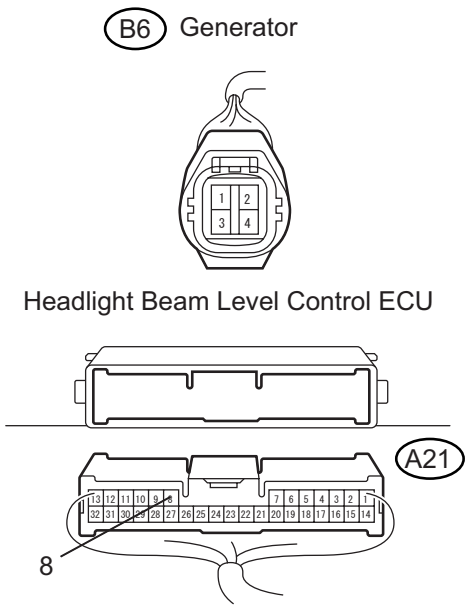

(a) Disconnect connector B6 of the generator and connector A21 of the headlight beam level control ECU.

(b) Measure the resistance according to the value(s) in the table below.

Standard resistance

Tester Connection	Condition	Specified Condition
B6-4 (L) - A21-8 (CHG-)	Always	Below 1 Ω

NG → **REPAIR OR REPLACE HARNESS OR CONNECTOR**

OK

PROCEED TO NEXT CIRCUIT INSPECTION SHOWN IN PROBLEM SYMPTOMS TABLE

Headlight Beam Level Control ECU Power Source Circuit

DESCRIPTION

This circuit provides power to operate the headlight beam level control ECU.

WIRING DIAGRAM

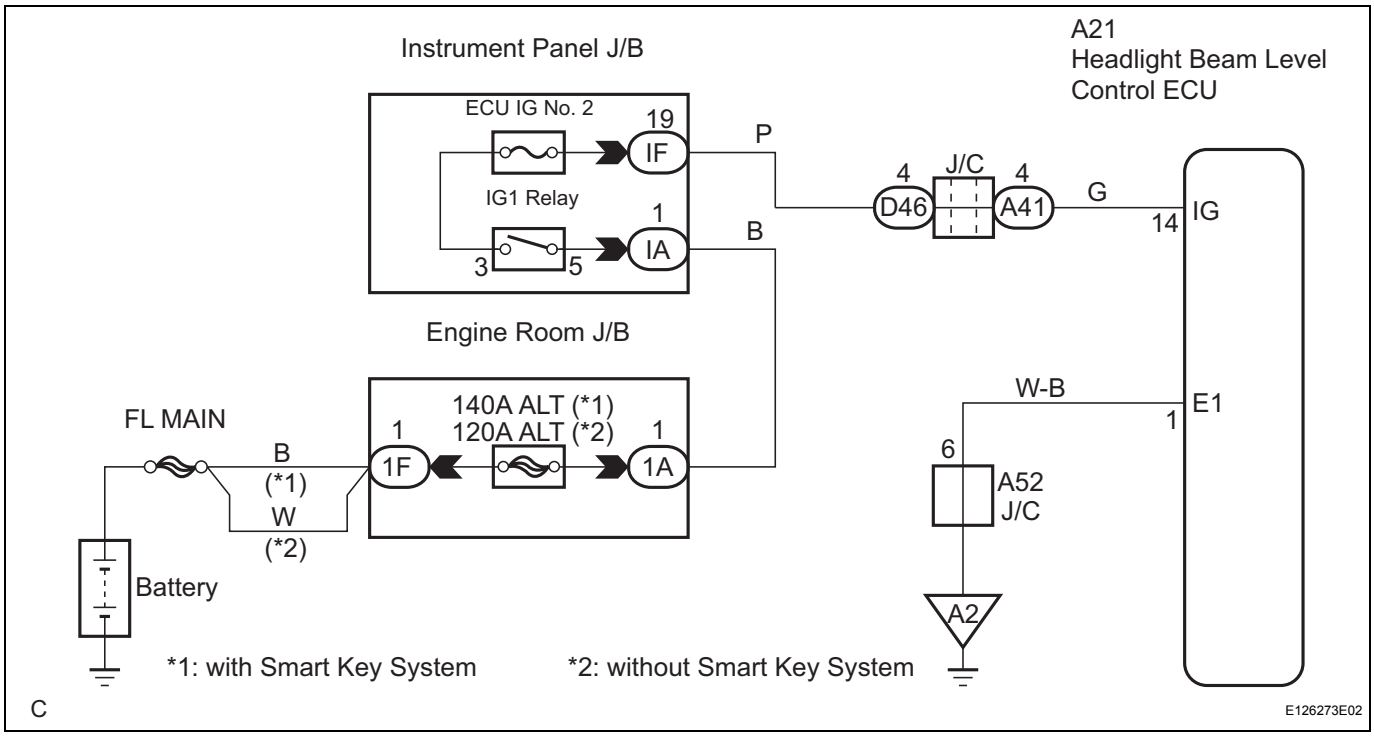

INSPECTION PROCEDURE

1	INSPECT IG1 RELAY

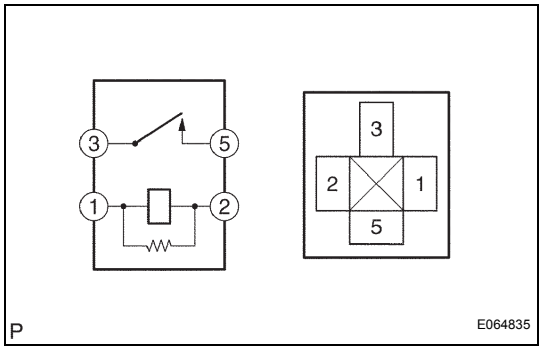

(a) Inspect IG1 relay continuity.
  (1) Remove the IG1 relay from the instrument panel J/B.
  (2) Measure the resistance according to the value(s) in the table below.

Standard resistance

Tester Connection	Specified Condition
3 - 5	10 kΩ or higher
3 - 5	Below 1 Ω (When battery voltage is applied to terminal 1 - 2)

NG → REPLACE IG1 RELAY

OK

2	INSPECT HEADLIGHT BEAM LEVEL CONTROL ECU

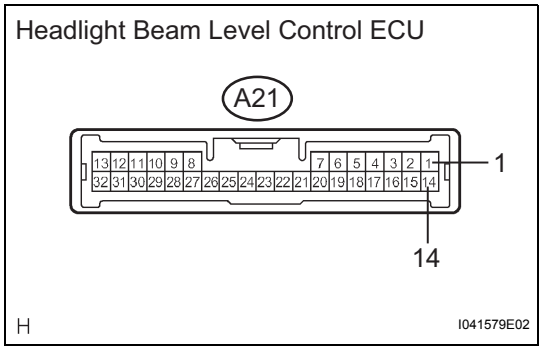

(a) Measure the voltage according to the value(s) in the table below.
Standard voltage

Tester Connection	Condition	Specified Condition
A21-14 - A21-1	Ignition switch off → Ignition switch on (IG)	Below 1 V → 10 to 14 V

NG → **Go to step 3**

OK

PROCEED TO NEXT CIRCUIT INSPECTION SHOWN IN PROBLEM SYMPTOMS TABLE

3	CHECK HARNESS AND CONNECTOR (BATTERY - HEADLIGHT BEAM LEVEL CONTROL ECU)

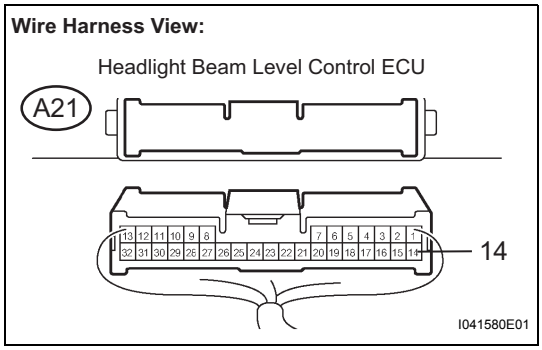

(a) Disconnect connector A21 of the headlight beam level control ECU.
(b) Measure the voltage according to the value(s) in the table below.
Standard voltage

Tester Connection	Condition	Specified Condition
A21-14 - Body ground	Ignition switch off → Ignition switch on (IG)	Below 1 V → 10 to 14 V

NG → **REPAIR OR REPLACE HARNESS OR CONNECTOR**

OK

4	CHECK HARNESS AND CONNECTOR (HEADLIGHT BEAM LEVEL CONTROL ECU - BODY GROUND)

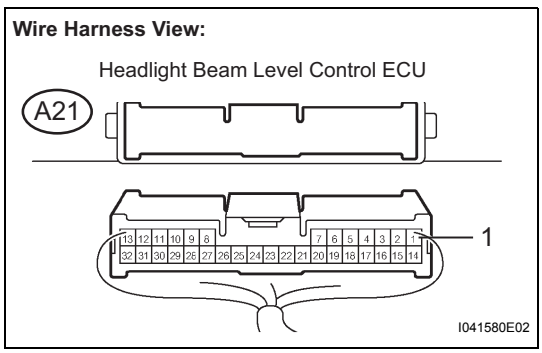

(a) Measure the resistance according to the value(s) in the table below.
Standard resistance

Tester Connection	Condition	Specified Condition
A21-1 (E1) - Body ground	Always	Below 1 Ω

NG → **REPAIR OR REPLACE HARNESS OR CONNECTOR**

OK

PROCEED TO NEXT CIRCUIT INSPECTION SHOWN IN PROBLEM SYMPTOMS TABLE

Height Control Sensor Circuit

DESCRIPTION

The height control sensor rear RH controls the resistance value based on changes vehicle height. The headlight beam level control ECU detects the changes in vehicle height from the transformed voltage. The headlight beam level control ECU outputs a constant voltage of 5 V to the SHB terminal of the height control sensor rear RH.
In the height control sensor sub-assembly rear RH, the voltage changes due to the resistance. The changes voltage is output from the SHRR terminal of the height control sensor rear RH to the headlight beam level control ECU, thus the vehicle's height is detected.

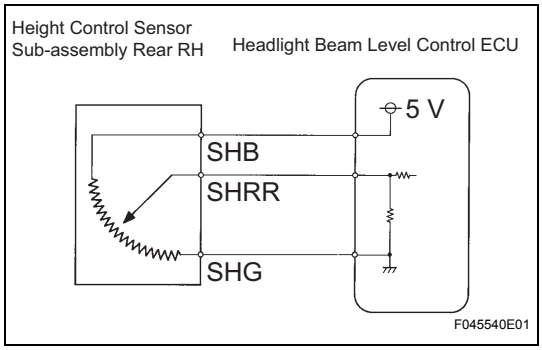

WIRING DIAGRAM

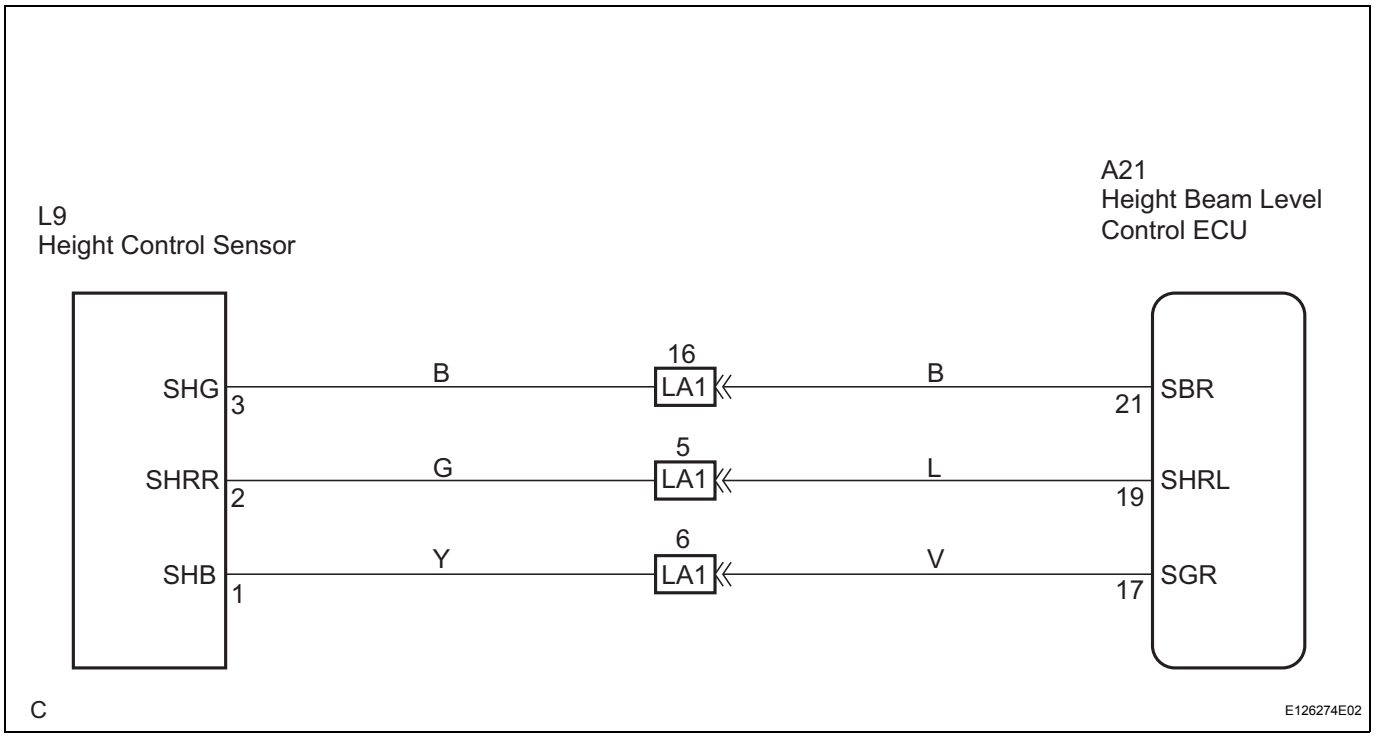

DESCRIPTION

1 INSPECT HEIGHT CONTROL SENSOR SUB-ASSEMBLY REAR RH

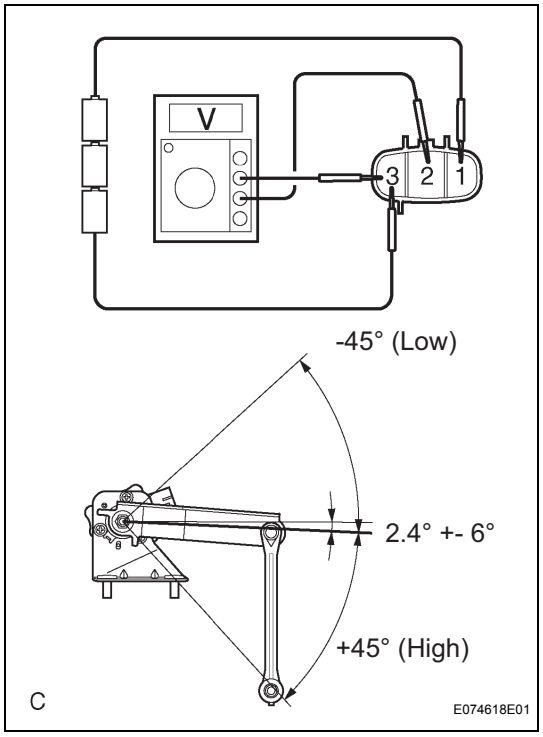

(a) Connect 3 dry cell batteries (1.5 V) in series.
(b) Remove the height control sensor sub-assembly rear.
(c) Connect the positive (+) lead from the battery to terminal 1 and the negative (-) lead from the battery to terminal 3.
(d) Measure the voltage between terminals 2 and 3 while slowly moving the link up and down.

Standard voltage

Tester Connection	Condition	Specified Condition
L9-2 (SHRR) - L9-3 (SHG)	+45° (High)	Approx. 4.5 V
L9-2 (SHRR) - L9-3 (SHG)	0° (Normal)	Approx. 2.5 V
L9-2 (SHRR) - L9-3 (SHG)	-45° (Low)	Approx. 0.5 V

NG → **REPLACE HEIGHT CONTROL SENSOR SUB-ASSEMBLY REAR RH**

OK

2 CHECK HARNESS AND CONNECTOR (HEIGHT CONTROL SENSOR REAR RH - HEADLIGHT BEAM LEVEL CONTROL)

Wire Harness View:

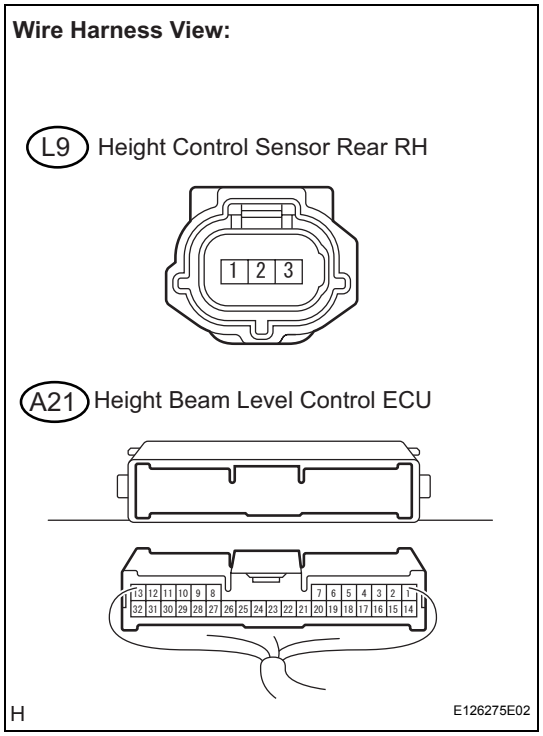

(a) Disconnect connector L9 of the height control sensor sub-assembly and connector A21 of the headlight leveling ECU assembly.
(b) Measure the resistance according to the value(s) in the table below.

Standard resistance

Tester Connection	Condition	Specified Condition
A21-17 (SGR) - L9-1 (SHB)	Always	Below 1 Ω
A21-19 (SHRL) - L9-2 (SHRR)	Always	Below 1 Ω
A21-21 (SRB) - L9-2 (SHG)	Always	Below 1 Ω
L9-3 (SHG) - Body ground	Always	10 kΩ or higher
L9-2 (SHRR) - Body ground	Always	10 kΩ or higher
L9-1 (SHB) - Body ground	Always	10 kΩ or higher

NG → **REPAIR OR REPLACE HARNESS OR CONNECTOR**

OK

PROCEED TO NEXT CIRCUIT INSPECTION SHOWN IN PROBLEM SYMPTOMS TABLE

Headlight Beam Level Control Actuator Circuit

DESCRIPTION

The headlight beam level control motor receives signals from the headlight beam level control ECU to operate. The headlight beam level control ECU receives signals regarding operating conditions of the headlight beam level control motor.

WIRING DIAGRAM

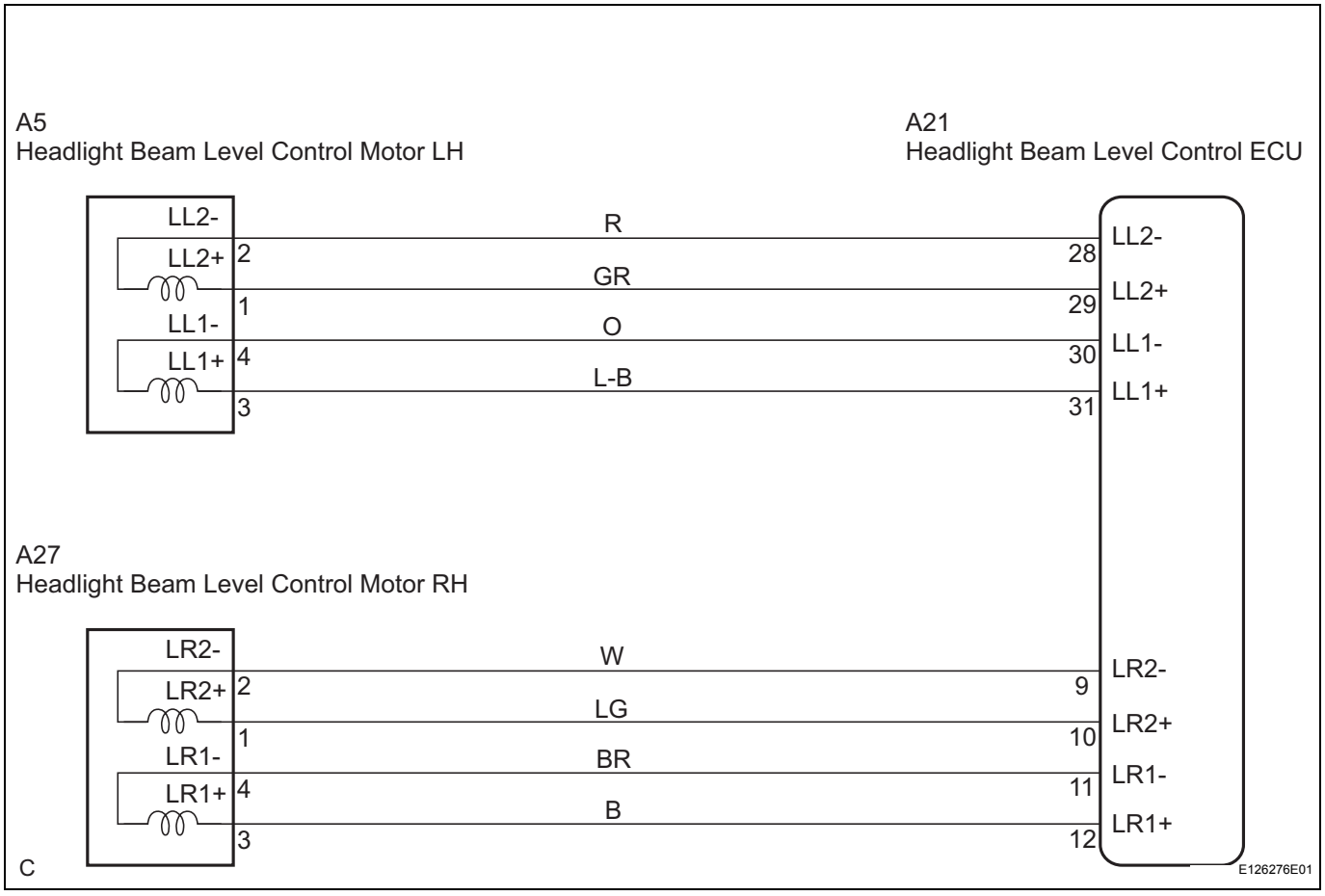

INSPECTION PROCEDURE

1	CHECK HARNESS AND CONNECTOR (HEADLIGHT BEAM LEVEL CONTROL MOTOR - HEADLIGHT BEAM LEVEL)

Wire Harness View:

A5 Headlight Beam Level Control Motor LH

A27 Headlight Beam Level Control Motor RH

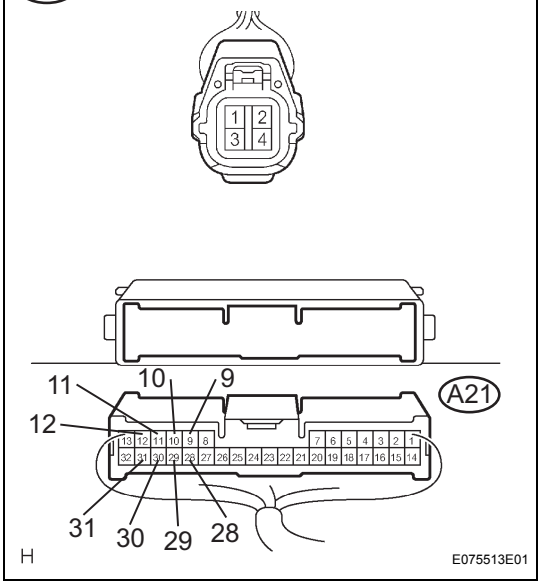

(a) Disconnect the headlight assembly connector on the headlight beam level control motor side and the headlight beam level control ECU connector.

(b) Measure the resistance according to the value(s) in the table below.

Standard resistance:

LH Side

Tester Connection	Condition	Specified Condition
A21-28 - A5-2	Always	Below 1 Ω
A21-29 - A5-1	Always	Below 1 Ω
A21-30 - A5-4	Always	Below 1 Ω
A21-31 - A5-3	Always	Below 1 Ω
A21-28 - Body ground	Always	10 kΩ or higher
A21-29 - Body ground	Always	10 kΩ or higher
A21-30 - Body ground	Always	10 kΩ or higher
A21-31 - Body ground	Always	10 kΩ or higher

RH Side

Tester Connection	Condition	Specified Condition
A21-9 - A27-2	Always	Below 1 Ω
A21-10 - A27-1	Always	Below 1 Ω
A21-11 - A27-4	Always	Below 1 Ω
A21-12 - A27-3	Always	Below 1 Ω
A21-9 - Body ground	Always	10 kΩ or higher
A21-10 - Body ground	Always	10 kΩ or higher
A21-11 - Body ground	Always	10 kΩ or higher
A21-12 - Body ground	Always	10 kΩ or higher

NG → **REPAIR OR REPLACE HARNESS OR CONNECTOR**

OK

2	INSPECT HEADLIGHT BEAM LEVEL CONTROL MOTOR

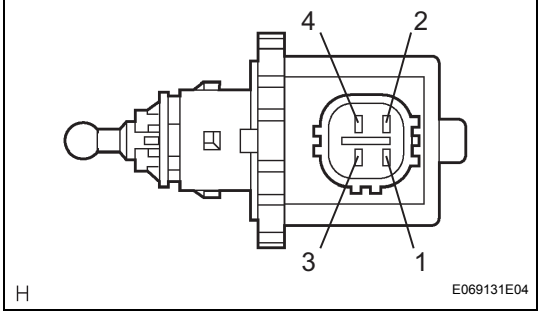

(a) Measure the resistance according to the value(s) in the table below.

Standard resistance:

LH Side

Tester Connection	Condition	Specified Condition
A5-1 - A5-2	Always	5.8 to 12.5 Ω
A5-3 - A5-4	Always	5.8 to 12.5 Ω

RH Side

Tester Connection	Condition	Specified Condition
A27-1 - A27-2	Always	5.8 to 12.5 Ω

Tester Connection	Condition	Specified Condition
A27-3 - A27-4	Always	5.8 to 12.5 Ω

HINT:
Measure the resistance after the headlight has cooled down.

NG → **REPLACE HEADLIGHT BEAM LEVEL CONTROL MOTOR**

OK

PROCEED TO NEXT CIRCUIT INSPECTION SHOWN IN PROBLEM SYMPTOMS TABLE

Combination Switch ECU Power Source Circuit

DESCRIPTION

This circuit provides power to operate the combination switch.

WIRING DIAGRAM

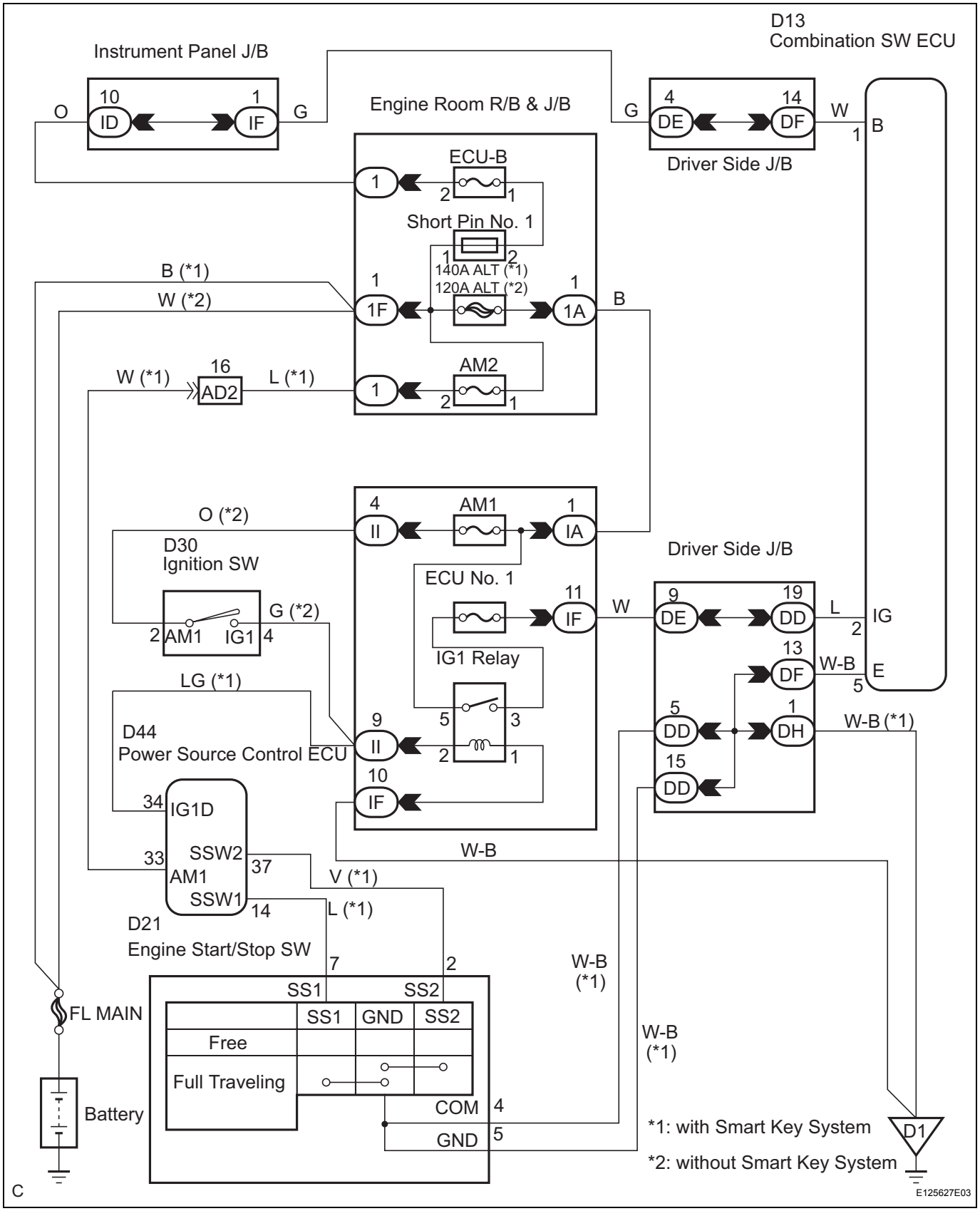

INSPECTION PROCEDURE

1 CHECK HARNESS AND CONNECTOR (COMBINATION SWITCH ECU - BATTERY)

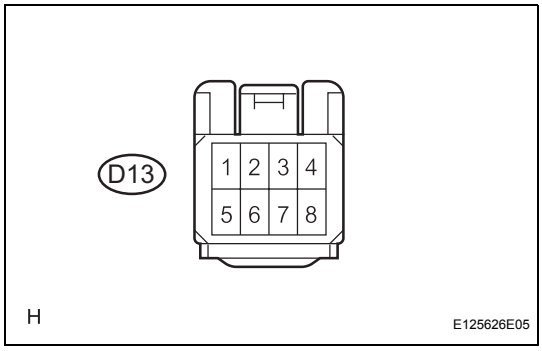

(a) Disconnect the connector from the combination switch.
(b) Measure the voltage according to the value(s) in the table below.

Standard voltage

Tester Connection	Condition	Specified Condition
D13-1 - Body ground	Always	10 to 14 V

NG → **REPAIR OR REPLACE HARNESS OR CONNECTOR**

OK

2 CHECK HARNESS AND CONNECTOR (IGNITION SWITCH CIRCUIT)

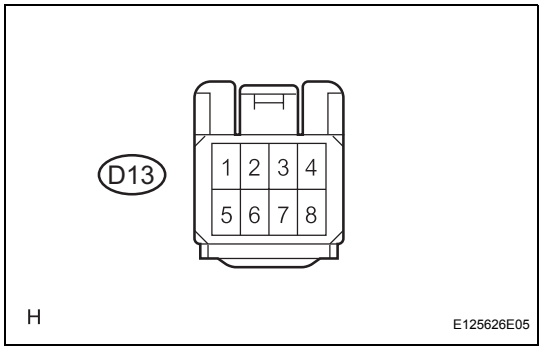

(a) Measure the voltage according to the value(s) in the table below.

Standard voltage

Tester Connection	Condition	Specified Condition
D13-2 - Body ground	Ignition switch on (IG)	10 to 14 V
D13-2 - Body ground	Ignition switch off	Below 1 V

NG → **REPAIR OR REPLACE HARNESS OR CONNECTOR**

OK

3 CHECK HARNESS AND CONNECTOR (COMBINATION SWITCH ECU - BODY GROUND)

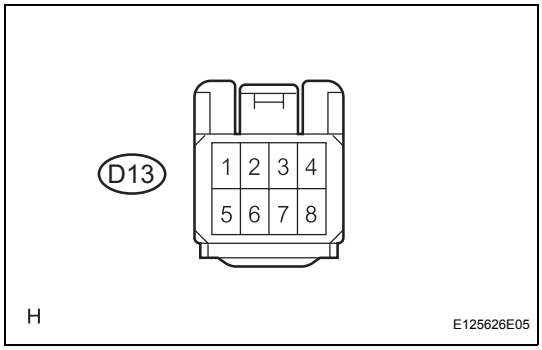

(a) Measure the resistance according to the value(s) in the table below.

Standard resistance

Tester Connection	Condition	Specified Condition
D13-5 - Body ground	Always	Below 1 Ω

NG → **REPAIR OR REPLACE HARNESS OR CONNECTOR**

OK

PROCEED TO NEXT CIRCUIT INSPECTION SHOWN IN PROBLEM SYMPTOMS TABLE

Headlight Beam Level Warning Circuit

DESCRIPTION

The headlight beam level warning indicator light in the combination meter assembly comes on for approximately 3 seconds when the ignition switch is turned on (IG). The headlight beam level warning indicator light also comes on when the headlight beam level control ECU detects a malfunction.

WIRING DIAGRAM

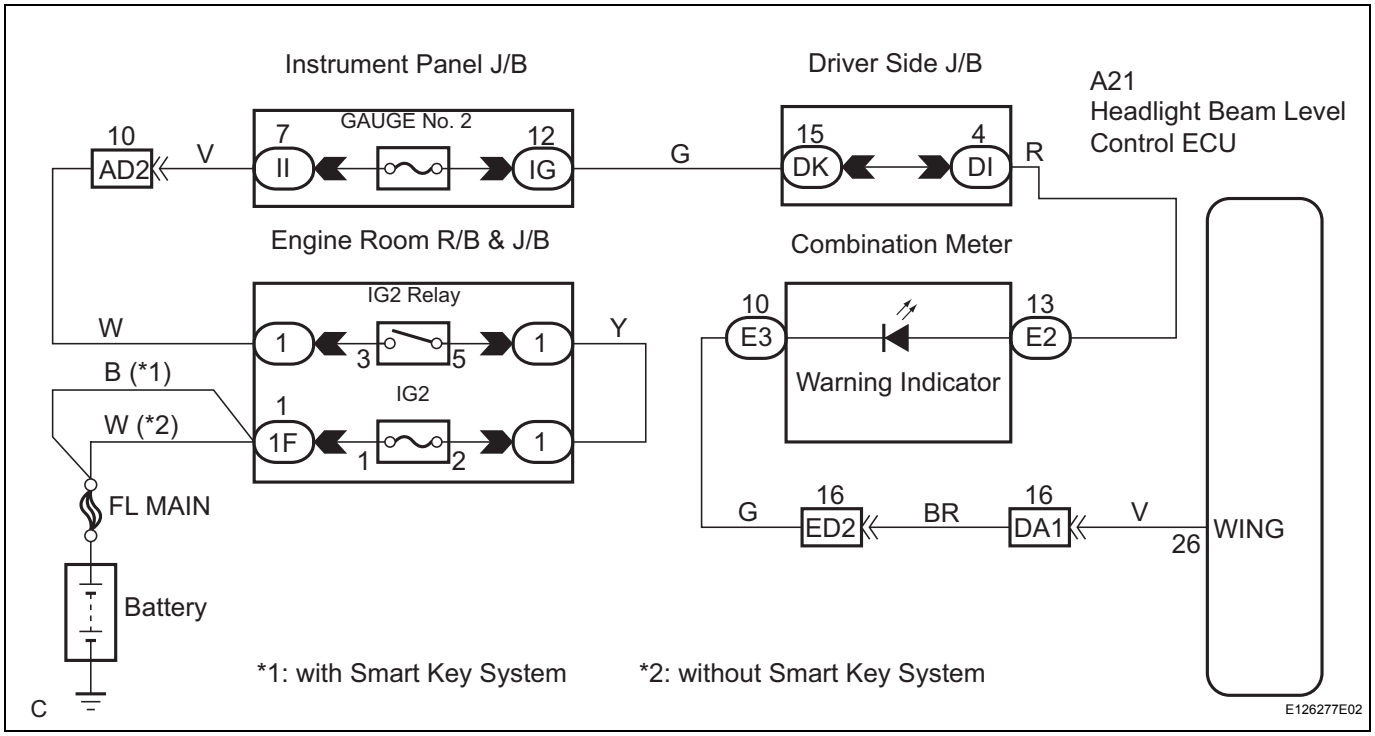

INSPECTION PROCEDURE

1	INSPECT HEADLIGHT BEAM LEVEL CONTROL ECU

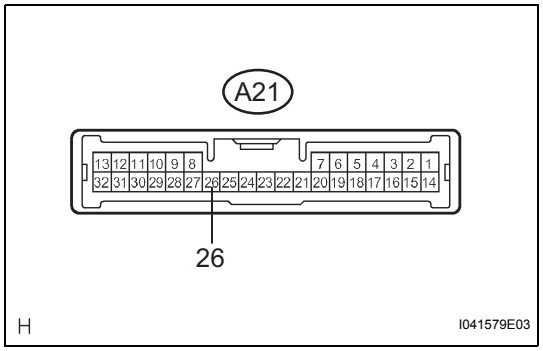

(a) Measure the voltage according to the value(s) in the table below.

Standard voltage

Tester Connection	Condition	Specified Condition
A21-26 - Body ground	Ignition switch on (IG) and headlight beam level warning indicator goes off	10 to 14 V
A21-26 - Body ground	Headlight beam level warning indicator comes on	Below 1 V

NG → Go to step 2

OK

PROCEED TO NEXT CIRCUIT INSPECTION SHOWN IN PROBLEM SYMPTOMS TABLE

2	**CHECK HARNESS AND CONNECTOR (HEADLIGHT BEAM LEVEL WARNING INDICATOR LIGHT)**

(a) Inspect the harness and connectors related to the headlight beam level warning indicator light, referring to the wiring diagram.

NG → **REPAIR OR REPLACE HARNESS OR CONNECTOR**

OK

PROCEED TO NEXT CIRCUIT INSPECTION SHOWN IN PROBLEM SYMPTOMS TABLE

LVL Terminal Circuit

DESCRIPTION

Connecting terminals LVL and CG of the DLC3 initializes the height control sensor signal.

WIRING DIAGRAM

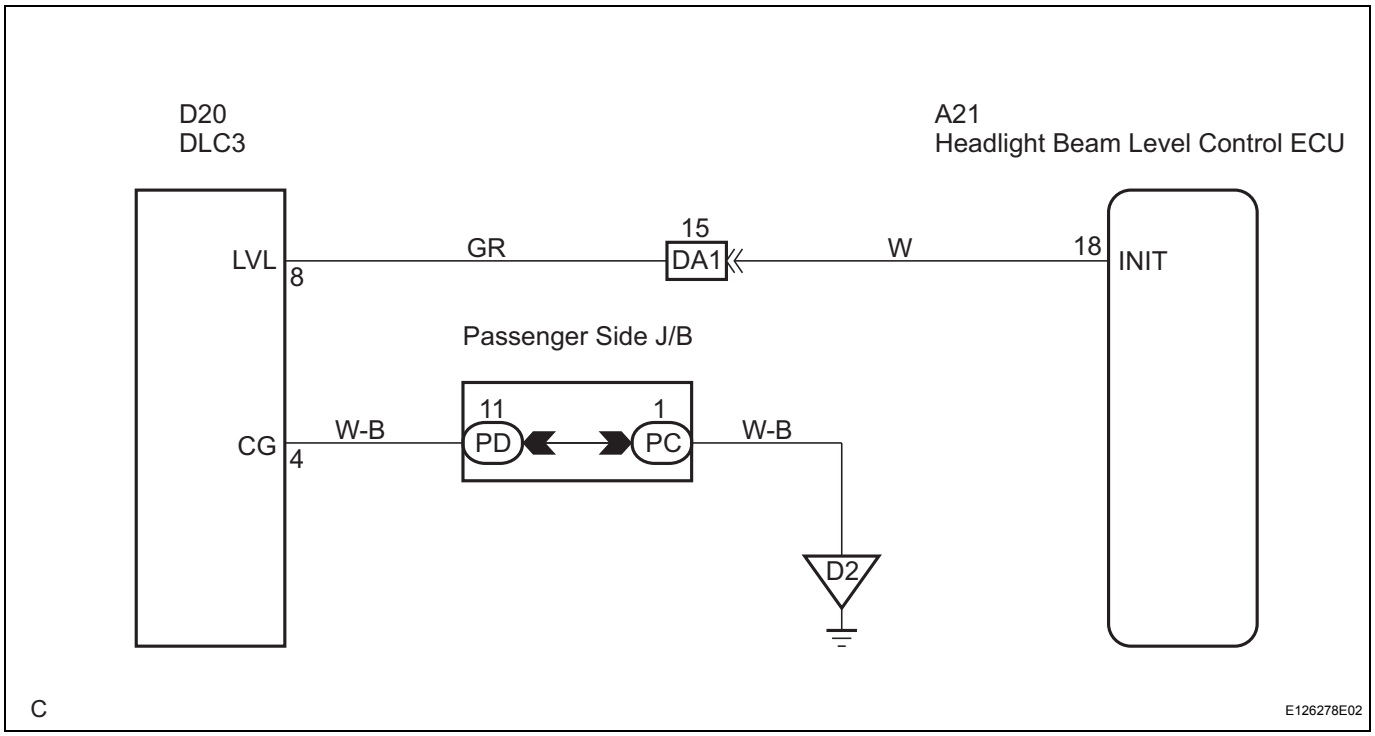

INSPECTION PROCEDURE

1	CHECK HARNESS AND CONNECTOR (DLC3 - HEADLIGHT BEAM LEVEL CONTROL ECU)

DLC3:

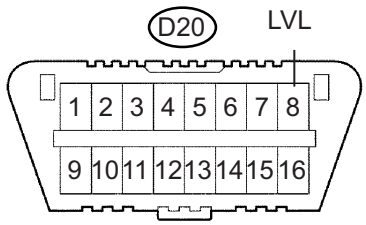

Headlight Beam Level Control ECU:

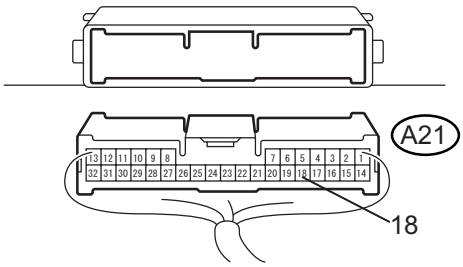

E128758E01

(a) Disconnect connector A21 from the headlight beam level control ECU.
(b) Measure the resistance according to the value(s) in the table below.

Standard resistance

Tester Connection	Condition	Specified Condition
D20-8 - A21-18	Always	Below 1 Ω
D20-8 - Body ground	Always	10 kΩ or higher

NG → **REPAIR OR REPLACE HARNESS OR CONNECTOR**

OK

2	CHECK HARNESS AND CONNECTOR (DLC3 - BODY GROUND)

DLC3:

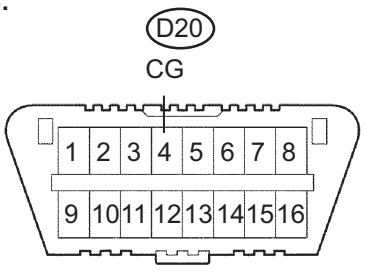

A122830E24

(a) Measure the resistance according to the value(s) in the table below.

Standard resistance

Tester Connection	Condition	Specified Condition
D20-4 - Body ground	Always	Below 1 Ω

NG → **REPAIR OR REPLACE HARNESS OR CONNECTOR**

OK

PROCEED TO NEXT CIRCUIT INSPECTION SHOWN IN PROBLEM SYMPTOMS TABLE

HEADLIGHT ASSEMBLY

COMPONENTS

HALOGEN HEADLIGHT:

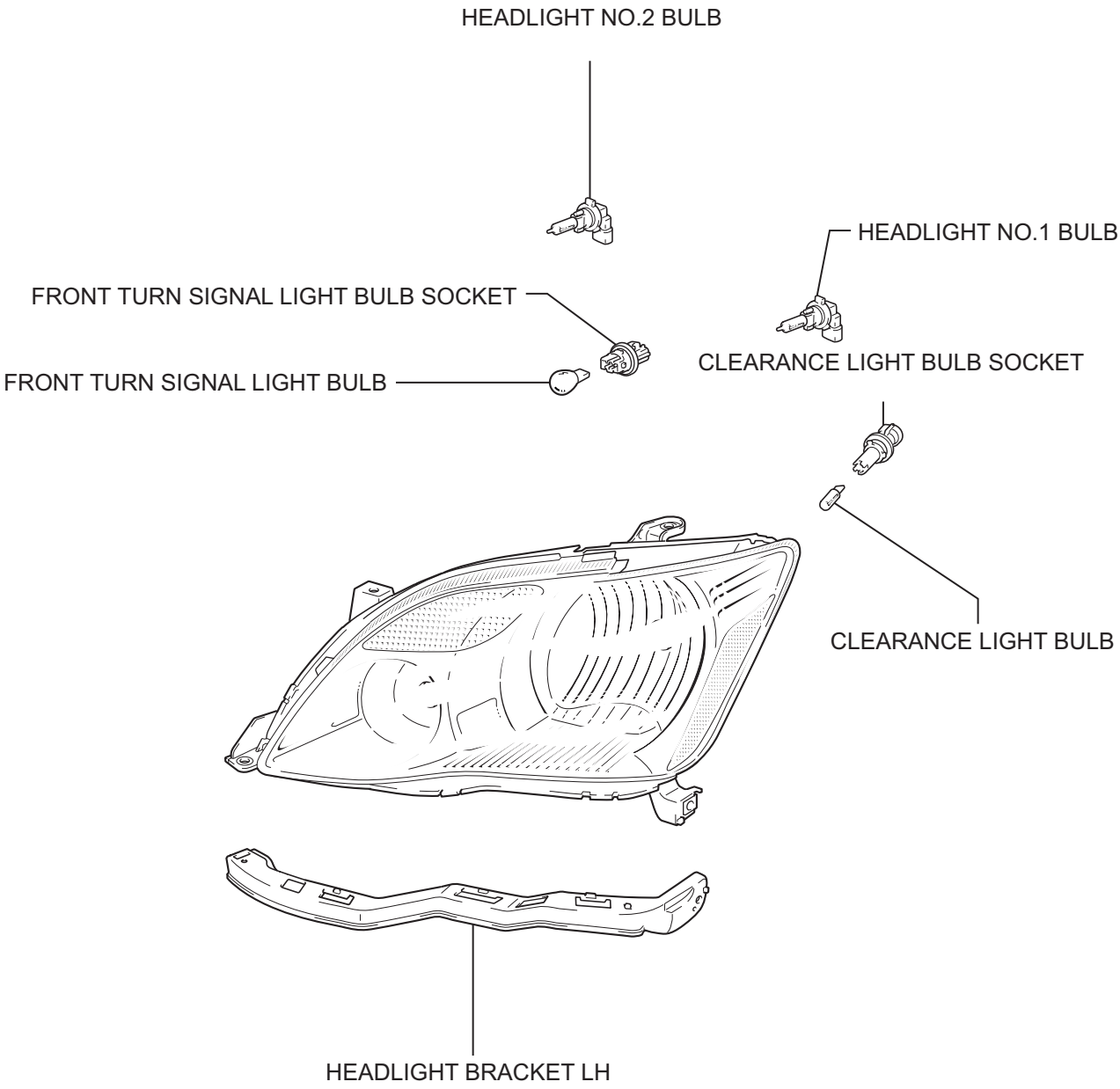

P

E112678E01

DISCHARGE HEADLIGHT:

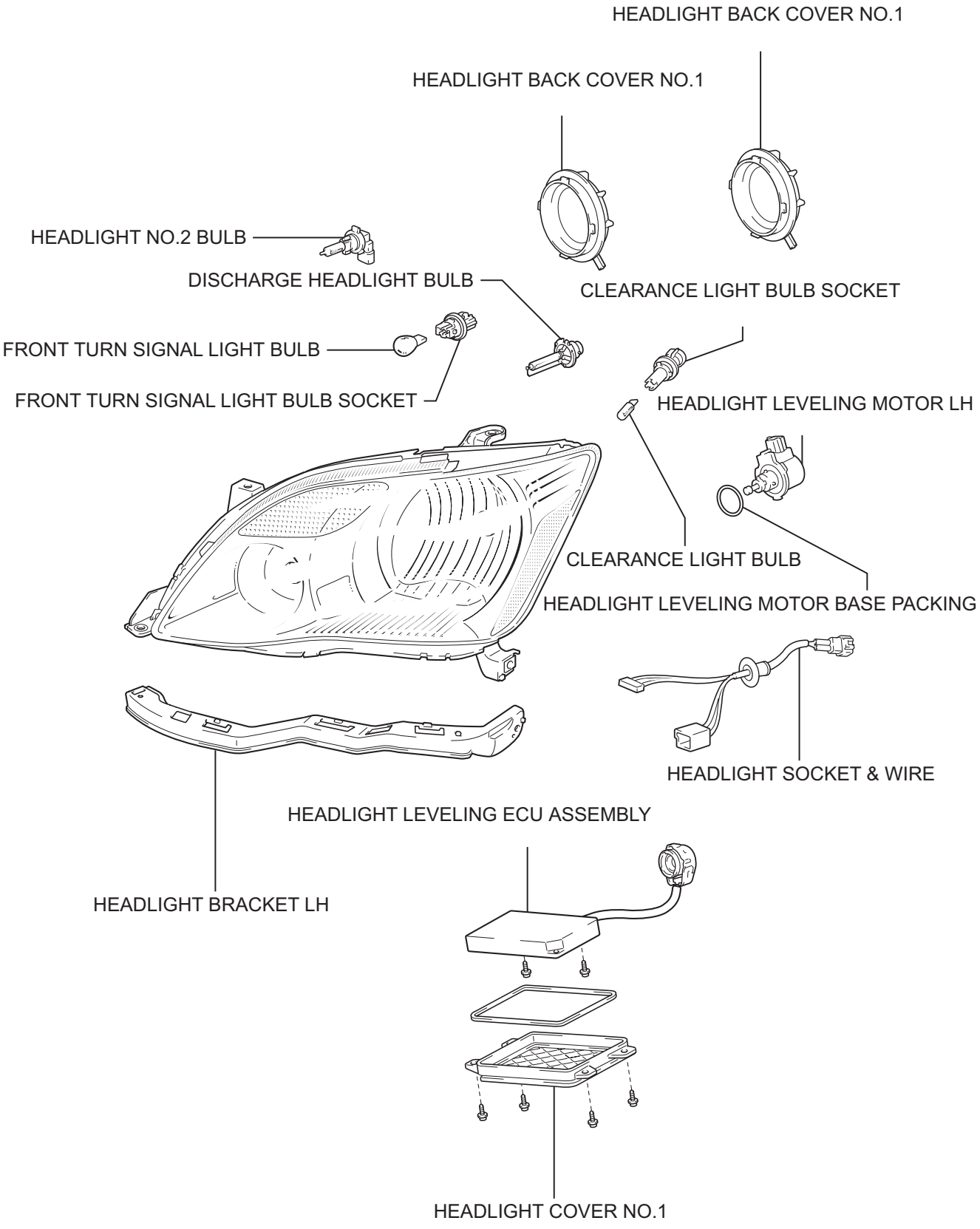

P

E112679E01

REMOVAL

HINT:
- Use the same procedures for the RH side and LH side.
- The procedures listed below are for the LH side.
- Installation is in the reverse order of removal.

1. **REMOVE RADIATOR GRILLER SUB-ASSEMBLY (See page ET-2)**
2. **REMOVE FRONT BUMPER ASSEMBLY (See page ET-2)**
3. **REMOVE HEADLIGHT ASSEMBLY**
   (a) Remove the 3 bolts.
   (b) Pull the LH headlight assembly in the direction indicated by the arrow and remove the LH headlight assembly.

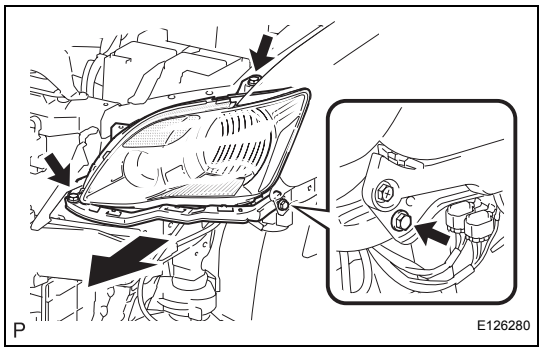

DISASSEMBLY

1. **REMOVE HEADLIGHT BRACKET LH**
   (a) Disengage the 2 claws and the headlight bracket LH.

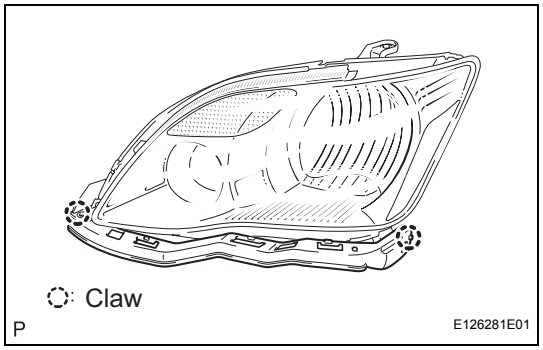

2. **REMOVE FRONT TURN SIGNAL LIGHT BULB**
   (a) Turn the socket plug assembly and the front turn signal light bulb in the direction indicated by the arrow and remove as a unit.

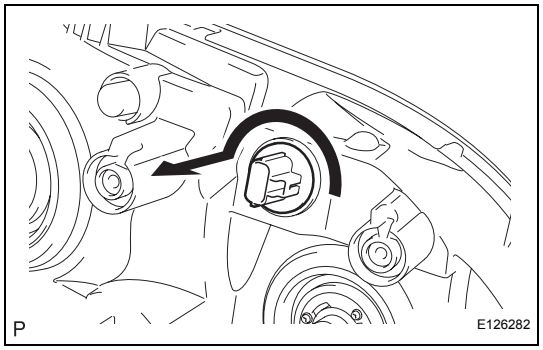

3. **REMOVE CLEARANCE LIGHT BULB**
   (a) Turn the socket plug assembly and the front clearance light bulb in the direction indicated by the arrow and remove as a unit.

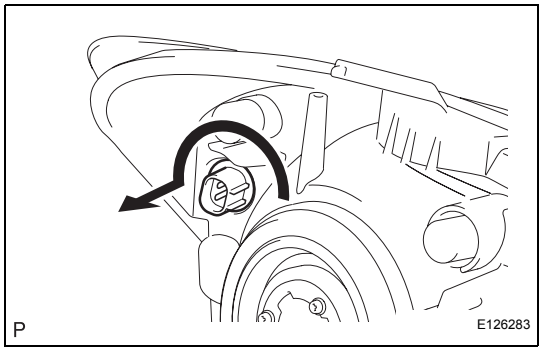

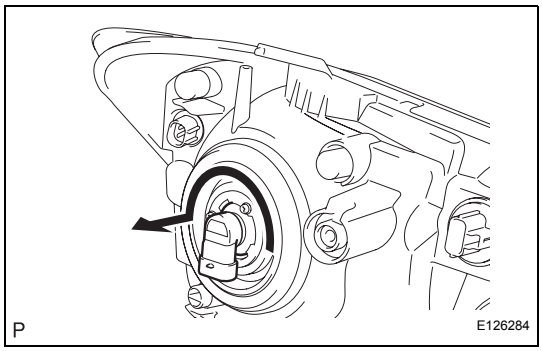

4. REMOVE HEADLIGHT NO.1 BULB

(a) Turn headlight bulb No. 1 in the direction indicated by the arrow and remove it.

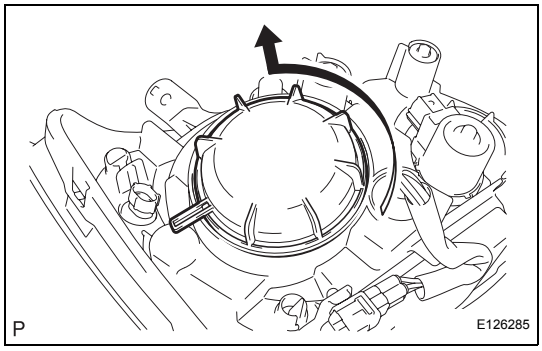

5. REMOVE DISCHARGE HEADLIGHT BULB

(a) Turn headlight back cover No. 1 in the direction indicated by the arrow and remove it.

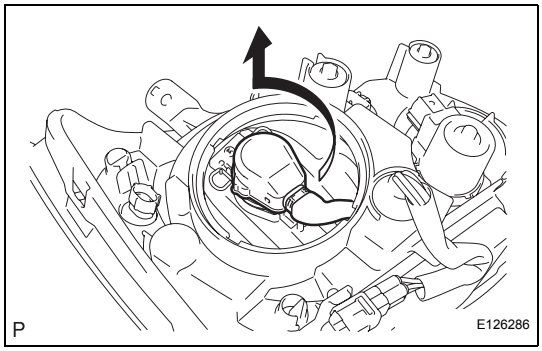

(b) Turn the discharge headlight bulb socket in the direction indicated by the arrow and remove the locking cap.

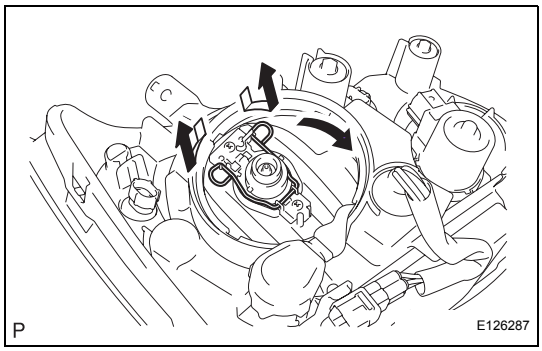

(c) Release the set spring lock as shown in the illustration and remove the discharge headlight bulb.

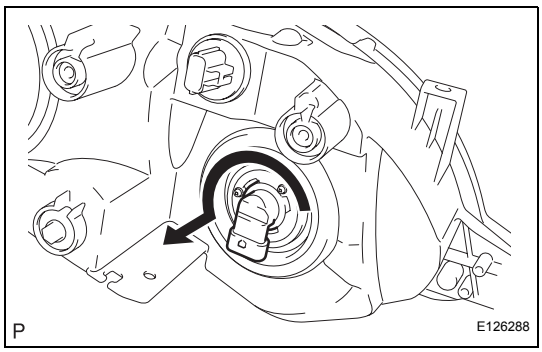

6. REMOVE HEADLIGHT NO.2 BULB

(a) Turn headlight bulb No. 2 in the direction indicated by the arrow and remove it.

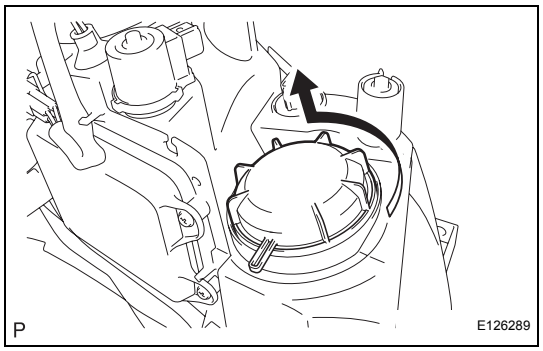

7. REMOVE HEADLIGHT NO.2 BULB

(a) Turn headlight back cover No. 1 in the direction indicated by the arrow and remove it.

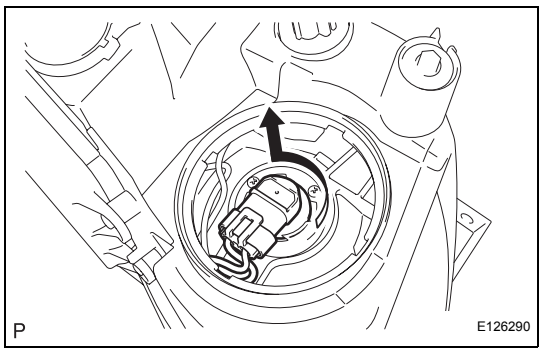

(b) Turn headlight No. 2 bulb in the direction indicated by the arrow and remove it.

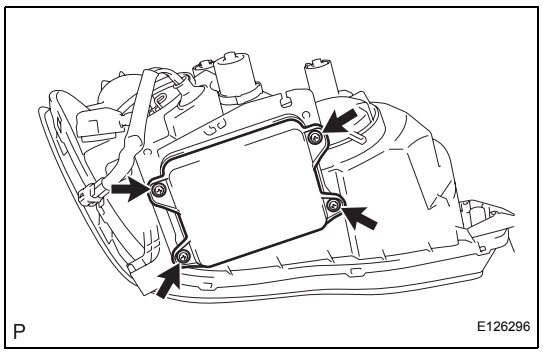

8. REMOVE HEADLIGHT LEVELING ECU ASSEMBLY

(a) Remove the 4 screws and headlight cover No. 1.

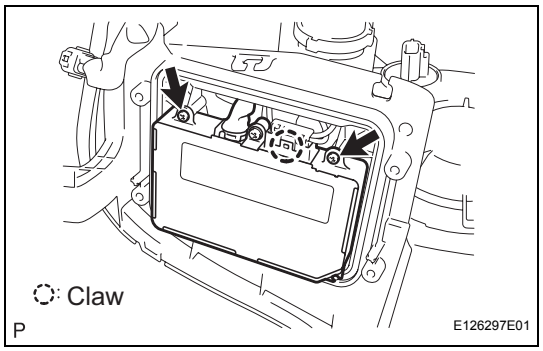

(b) Remove the 2 screws.

(c) Disengage the claw, disconnect the connector and remove the headlight leveling ECU assembly.

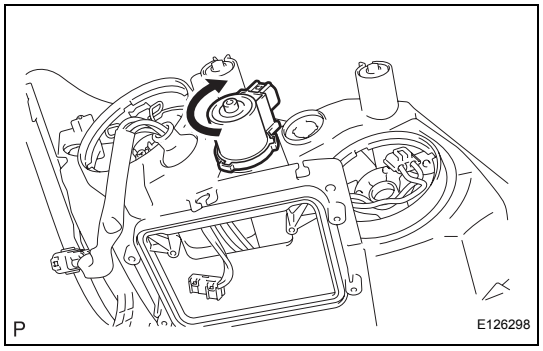

9. REMOVE HEADLIGHT LEVELING MOTOR LH

(a) Turn the headlight leveling motor to align the recessed parts with the headlight unit LH.

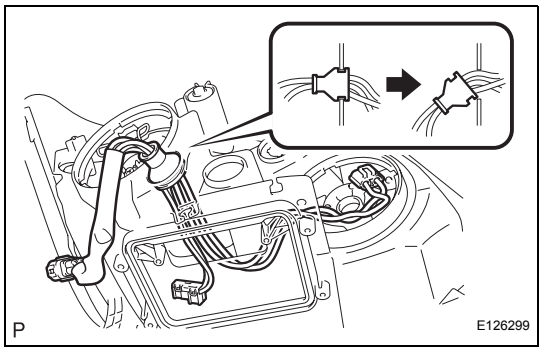

10. REMOVE HEADLIGHT SOCKET & WIRE

(a) Remove the headlight socket & wire.

ADJUSTMENT

1. PREPARE VEHICLE FOR HEADLIGHT AIMING ADJUSTMENT

(a) Prepare the vehicle:
- Ensure there is no damage or deformation to the body around the headlights.
- Fill the fuel tank.
- Make sure that the oil is filled to the specified level.
- Make sure that the coolant is filled to the specified level.
- Inflate the tires to the appropriate pressure.
- Place the spare tire, tools, and jack in their original positions.
- Unload the trunk.
- Sit a person of average weight (68 kg, 150 lb) in the driver's seat.

2. PREPARE FOR HEADLIGHT AIMING (Using a tester)

(a) Prepare the vehicle for headlight aim check.

(b) Adjust in accordance with headlight tester instructions.

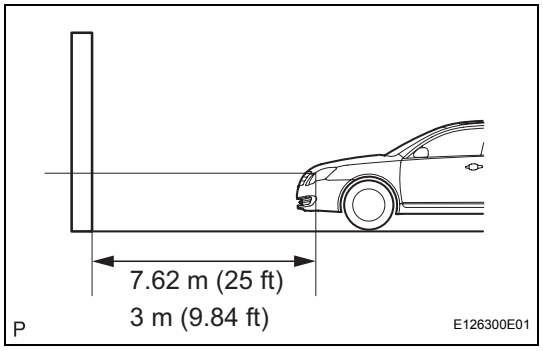

3. PREPARE FOR HEADLIGHT AIMING (Using a screen)

(a) Prepare the vehicle according to the following conditions:
- Place the vehicle in a location that is dark enough to clearly observe the cutoff line. The cutoff line is a distinct line, below which light from the headlights can be observed and above which it cannot.
- Place the vehicle at a 90° angle to the wall.
- Create a 7.62 m (25 ft) distance between the vehicle (headlight bulb center) and the wall.
- Place the vehicle on a level surface.
- Bounce the vehicle up and down to settle the suspension.

NOTICE:

A distance of 7.62 m (25 ft) between the vehicle (headlight bulb center) and the wall is necessary for proper aim adjustment. If unavailable, secure a distance of exactly 3 m (9.84 ft) for check and adjustment. (The target zone will change with the distance, so follow the instructions in the illustration.)

(b) Prepare a piece of thick white paper (approximately 2 m (6.6 ft) (height) x 4 m (13.1 ft) (width)) to use as a screen.

(c) Draw a vertical line down the center of the screen (V line).

(d) Set the screen as shown in the illustration.
HINT:
- Stand the screen perpendicular to the ground.

- Align the V line on the screen with the center of the vehicle.

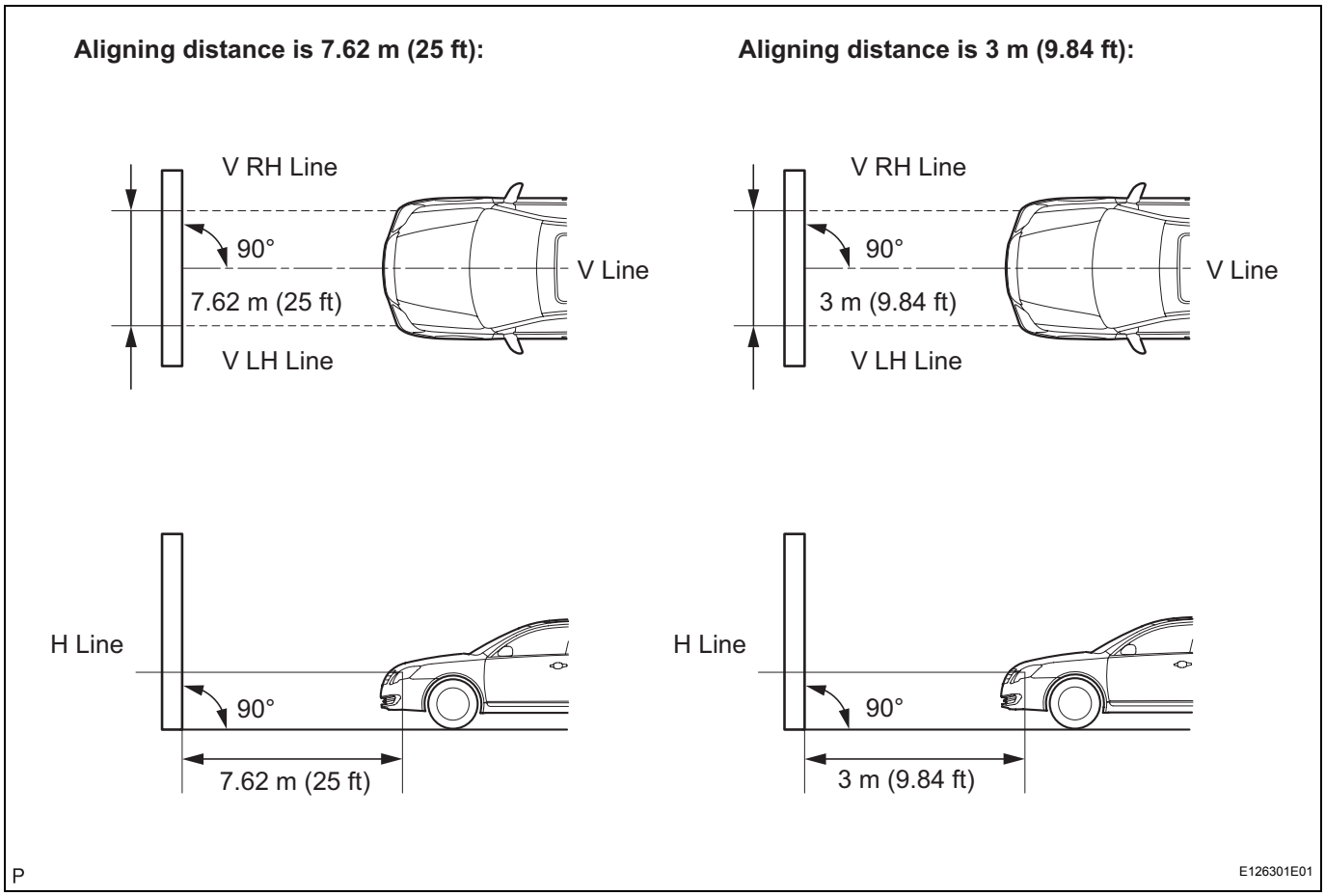

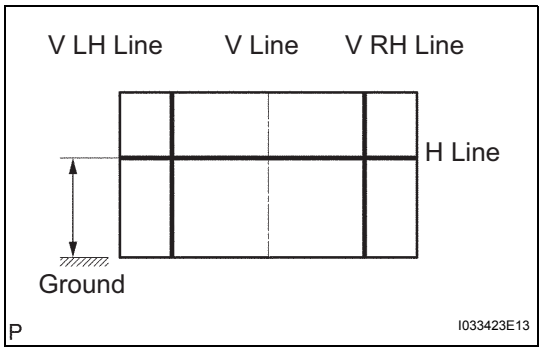

(e) Draw base lines (H line, V LH, V RH lines) on the screen as shown in the illustration.
HINT:
- The base lines differ for "low-beam inspection" and "high-beam inspection".
- Mark the headlight bulb center marks on the screen. If the center mark cannot be observed on the headlight, use the center of the headlight bulb or the manufacturer's name marked on the headlight as the center mark.

(1) H Line (Headlight height):
Draw a horizontal line across the screen so that it passes through the center marks. The H line should be at the same height as the headlight bulb center marks of the low-beam headlights.

(2) V LH Line, V RH Line (Center mark position of left-hand (LH) and right-hand (RH) headlight):
Draw two vertical lines so that they intersect the H line at each center mark (aligned with the center of the low-beam headlight bulbs).

4. INSPECT HEADLIGHT AIMING

(a) Cover or disconnect the connector of the headlight on the opposite side to prevent light from the headlight not being inspected from affecting headlight aiming inspection.

NOTICE:

Do not keep the headlight covered for more than 3 minutes. The headlight lens is made of synthetic resin, and may easily melt or be damaged due to heat.

HINT:

When checking the aim of the high-beam, cover the low-beam or disconnect the connector.

(b) Start the engine.

NOTICE:

Engine rpm must be 1,500 or more.

(c) Turn on the headlight and make sure that the cutoff line falls within the specified area as shown in the illustration.

Aligning distance is 7.62 m (25 ft):

Low Beam:

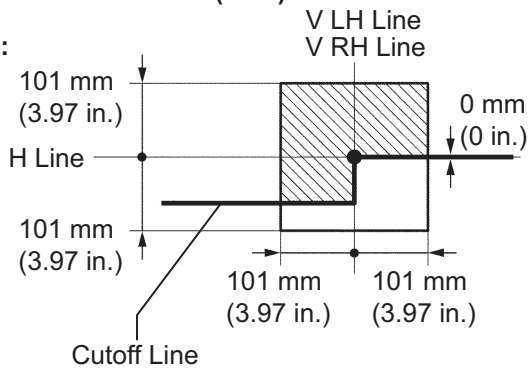

High Beam:

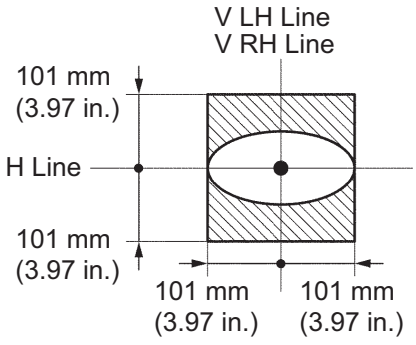

Aligning distance is 3 m (9.84 ft):

Low Beam:

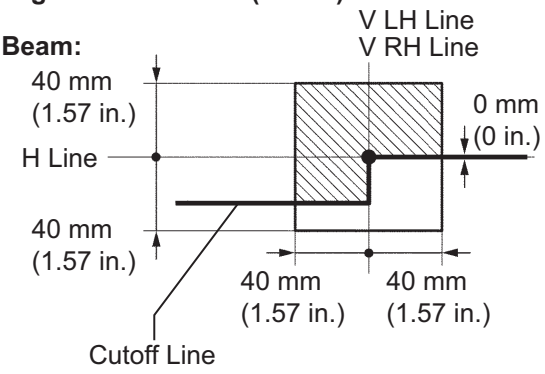

High Beam:

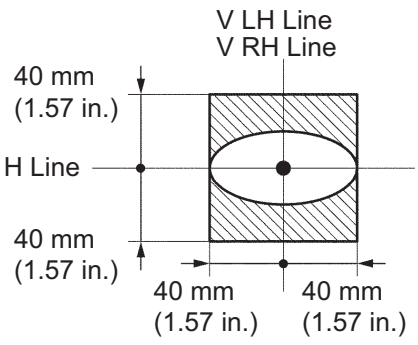

I041214E04

HINT:

- Since the low-beam light and the high-beam light are a unit, if the aim on one is correct, the other should also be correct. However, check both beams just to make sure.

- Alignment distance is 7.62 m (25 ft):
  The cutoff line is 101 mm (3.97 in.) above and below the H line as well as left and right of the V line with low-beam (SAE J599).
- Alignment distance is 3 m (9.84 ft):
  The cutoff line is 40 mm (1.57 in.) above and below the H line as well as left and right of the V line with low-beam (SAE J599).
- Alignment distance is 7.62 m (25 ft):
  The cutoff line is 101 mm (3.97 in.) above and below the H line as well as left and right of the V line with high-beam (SAE J599).
- Alignment distance is 3 m (9.84 ft):
  The cutoff line is 40 mm (1.57 in.) above and below the H line as well as left and right of the V line with high-beam (SAE J599).
- Alignment distance is 7.62 m (25 ft):
  The cutoff line is 53 mm (2.08 in.) below the H line with low-beam.
- Alignment distance is 3 m (9.84 ft):
  The cutoff line is 21 mm (0.82 in.) below the H line with low-beam.

Halogen Headlight:

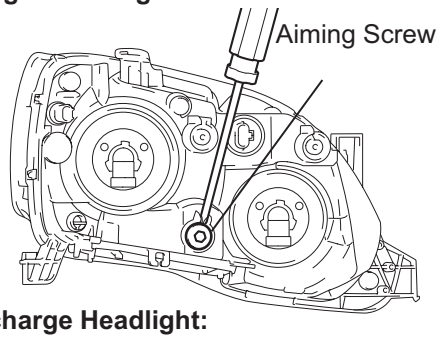

Discharge Headlight:

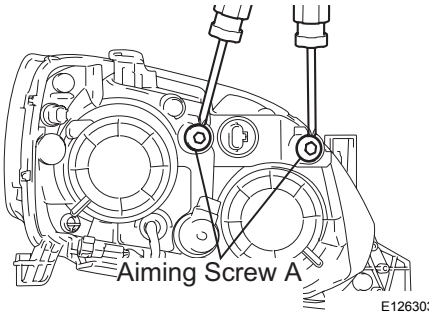

P E126303E01

5. ADJUST HEADLIGHT AIMING

(a) Adjust the aim vertically:
Adjust the headlight aim into the specified range by turning aiming screw A with a screwdriver.

NOTICE:

The final turn of the aiming screw should be made in the clockwise direction. If the screw is tightened excessively, loosen and then retighten it, so that the final turn of the screw is in the clockwise direction.

HINT:

- Perform low-beam aim adjustment.
- The headlight aim moves up when turning the aiming screw clockwise, and moves down when turning the aiming screw counterclockwise.
- On discharge headlight, both screw as should be turned the same number on turned in the same direction.

REASSEMBLY

1. **INSTALL HEADLIGHT SOCKET & WIRE**
2. **INSTALL HEADLIGHT LEVELING MOTOR LH**
3. **INSTALL HEADLIGHT LEVELING ECU ASSEMBLY**
4. **INSTALL HEADLIGHT NO.2 BULB**
5. **INSTALL DISCHARGE HEADLIGHT BULB**
6. **INSTALL HEADLIGHT NO.1 BULB**
7. **INSTALL CLEARANCE LIGHT BULB**
8. **INSTALL FRONT TURN SIGNAL LIGHT BULB**
9. **INSTALL HEADLIGHT BRACKET LH**

INSTALLATION

1. **INSTALL HEADLIGHT ASSEMBLY**
2. **INSTALL FRONT BUMPER ASSEMBLY (See page ET-4)**
3. **INSTALL RADIATOR GRILLE SUB-ASSEMBLY (See page ET-4)**

REPAIR

HINT:

- Use the same procedures for the RH side and LH side.
- The procedures listed below are for the LH side.
- If the area where the headlight unit LH is installed is broken, the repairs listed below can be performed inexpensively through the use of a repair use bracket. This may only be done if the headlight assembly LH itself is not damaged.

1. **REMOVE RADIATOR GRILLE SUB-ASSEMBLY (See page ET-2)**
2. **REMOVE FRONT BUMPER ASSEMBLY (See page ET-2)**
3. **REMOVE HEADLIGHT ASSEMBLY (See page LI-111)**
4. **REMOVE HEADLIGHT BRACKET (See page LI-111)**
5. **REMOVE HEADLIGHT PROTECTOR RETAINER UPPER**

   HINT:

   - If the installation area of the headlight assembly LH is damaged, use the supply bracket for low-cost repair.
   - Ensure that the headlight assembly LH is not damaged.

   (a) Cut off part shaded in the illustration and sand smooth with sandpaper.

   NOTICE:
   After cutting off the part, place the headlight protector retainer UPR LH against the bosses and gradually file away until installation is possible.

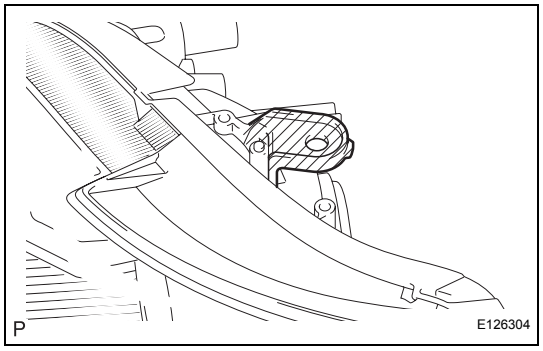

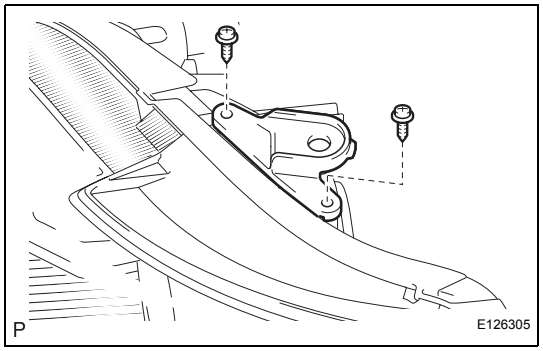

   (b) Install the headlight protector retainer UPR LH with the 2 screws.

6. **REMOVE HEADLIGHT PROTECTOR RETAINER LOWER**

   HINT:

   - If the installation area of the headlight assembly LH is damaged, use the supply bracket for low-cost repair.
   - Ensure that the headlight assembly LH is not damaged.

LI

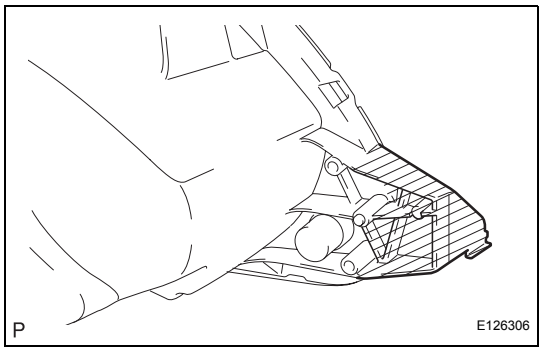

(a) Cut off the part shaded in the illustration and sand smooth with sandpaper.
NOTICE:
After cutting off the part, place the headlight protector retainer LWR LH against the bosses and gradually file away until installation is possible.

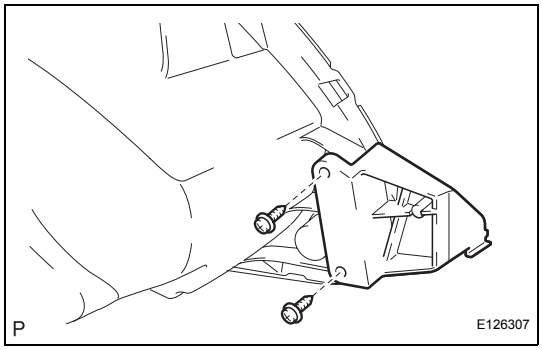

(b) Install the headlight protector retainer LWR LH with the 2 screws.

7. **INSTALL FRONT BUMPER ASSEMBLY (See page ET-4)**
8. **INSTALL RADIATOR GRILLE SUB-ASSEMBLY (See page ET-4)**
9. **PREPARE VEHICLE FOR HEADLIGHT AIMING ADJUSTMENT (See page LI-114)**
10. **PREPARE FOR HEADLIGHT AIMING (for Using a Tester) (See page LI-114)**
11. **PREPARE FOR HEADLIGHT AIMING (for Using a Screen) (See page LI-114)**
12. **INSPECT HEADLIGHT AIMING (See page LI-116)**
13. **ADJUST HEADLIGHT AIMING (See page LI-117)**
14. **PREPARE VEHICLE FOR FOG LIGHT AIMING ADJUSTMENT (See page LI-121)**
15. **PREPARE FOR FOG LIGHT AIMING (See page LI-122)**
16. **INSPECT FOG LIGHT AIMING (See page LI-123)**
17. **ADJUST FOG LIGHT AIMING (See page LI-124)**

FOG LIGHT ASSEMBLY

COMPONENTS

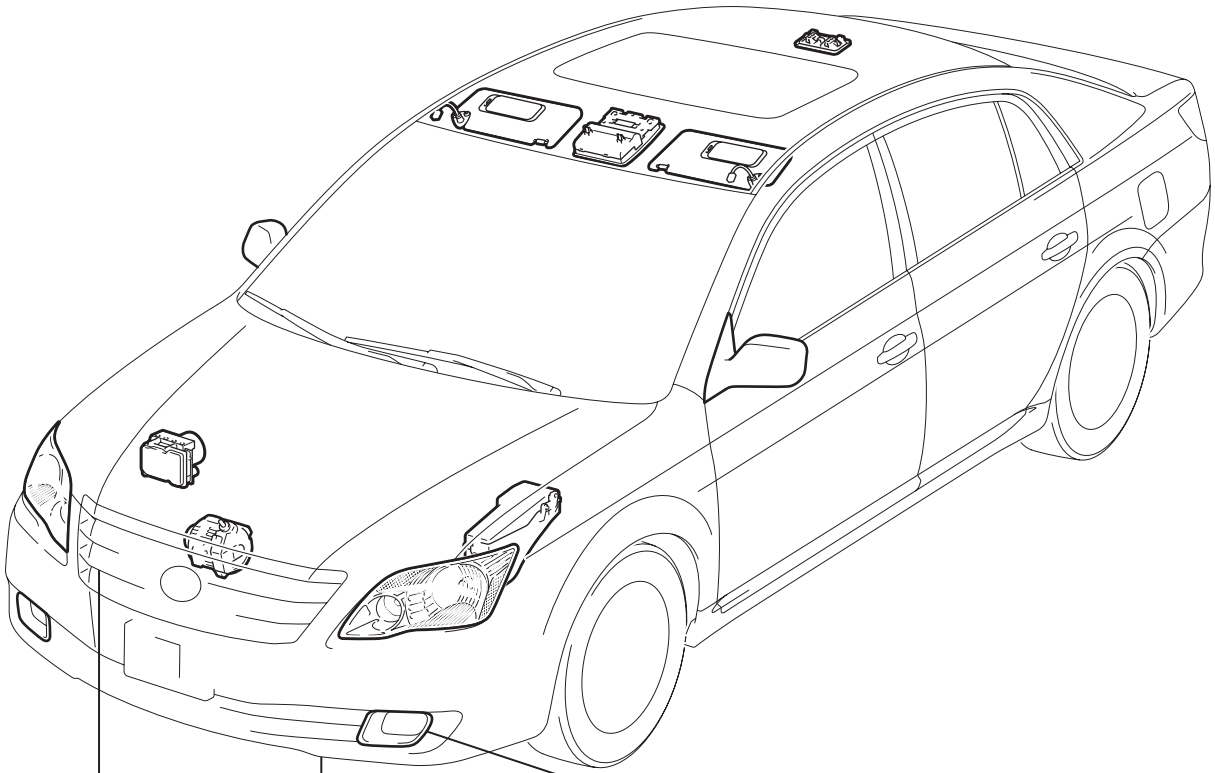

FRONT BUMPER ASSEMBLY

RADIATOR GRILLE SUB-ASSEMBLY

FOG LIGHT ASSEMBLY

- FOG LIGHT BRACKET
- FOG LIGHT BULB

P

E112675E05

REMOVAL

HINT:
- Use the same procedures for the RH side and LH side.
- The procedures listed below are for the LH side.
- Installation is in the reverse order of removal.

1. **REMOVE RADIATOR GRILLE SUB-ASSEMBLY (See page ET-2)**
2. **REMOVE FRONT BUMPER ASSEMBLY (See page ET-2)**
3. **REMOVE FOG LIGHT ASSEMBLY**
   (a) Remove the 2 screws.
   (b) Disengage the 2 claws and remove the fog light assembly LH.

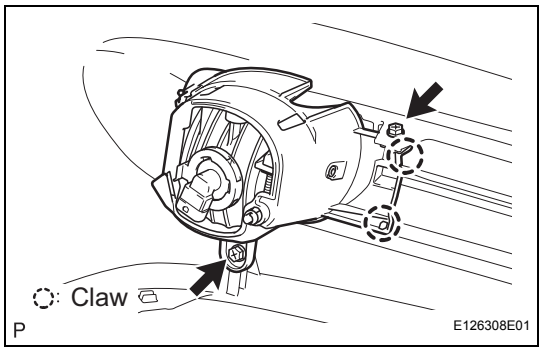

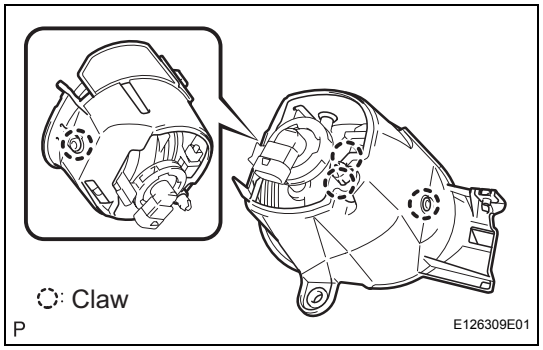

DISASSEMBLY

1. **REMOVE FOG LIGHT BRACKET**
   (a) Disengage the 4 claws and fog light bracket LH.

2. **REMOVE FOG LIGHT BULB**
   (a) Turn the fog light bulb in the direction indicated by the arrow and remove it.

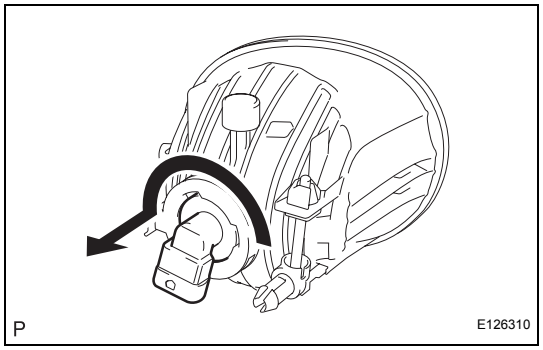

ADJUSTMENT

1. PREPARE VEHICLE FOR FOG LIGHT AIMING ADJUSTMENT

(a) Prepare the vehicle:
- Ensure there is no damage or deformation to the body around the fog lights.
- Fill the fuel tank.
- Make sure that the oil is filled to the specified level.
- Make sure that the coolant is filled to the specified level.
- Inflate the tires to the appropriate pressure.
- Place the spare tire, tools, and jack in their original positions.
- Unload the trunk.
- Sit a person of average weight (68 kg, 150 lb) in the driver's seat.

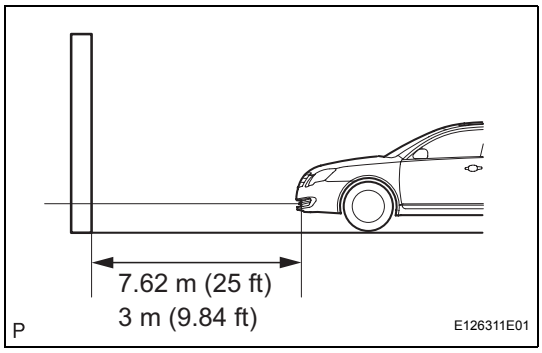

2. PREPARE FOR FOG LIGHT AIMING

(a) Prepare the vehicle according to the following conditions:
- Place the vehicle in a location that is dark enough to clearly observe the cutoff line. The cutoff line is a distinct line, below which light from the fog lights can be observed and above which it cannot.
- Place the vehicle at a 90° angle to the wall.
- Create a 7.62 m (25 ft) distance between the vehicle (fog light bulb center) and the wall.
- Place the vehicle on a level surface.
- Bounce the vehicle up and down to settle the suspension.

NOTICE:

A distance of 7.62 m (25 ft) between the vehicle (fog light bulb center) and the wall is necessary for proper aim adjustment. If unavailable, secure a distance of exactly 3 m (9.84 ft) for check and adjustment. (The target zone will change with the distance, so follow the instructions in the illustration.)

(b) Prepare a piece of thick white paper (approximately 2 m (6.6 ft) (height) x 4 m (13.1 ft) (width)) to use as a screen.

(c) Draw a vertical line down the center of the screen (V line).

(d) Set the screen as shown in the illustration.

HINT:
- Stand the screen perpendicular to the ground.
- Align the V line on the screen with the center of the vehicle.

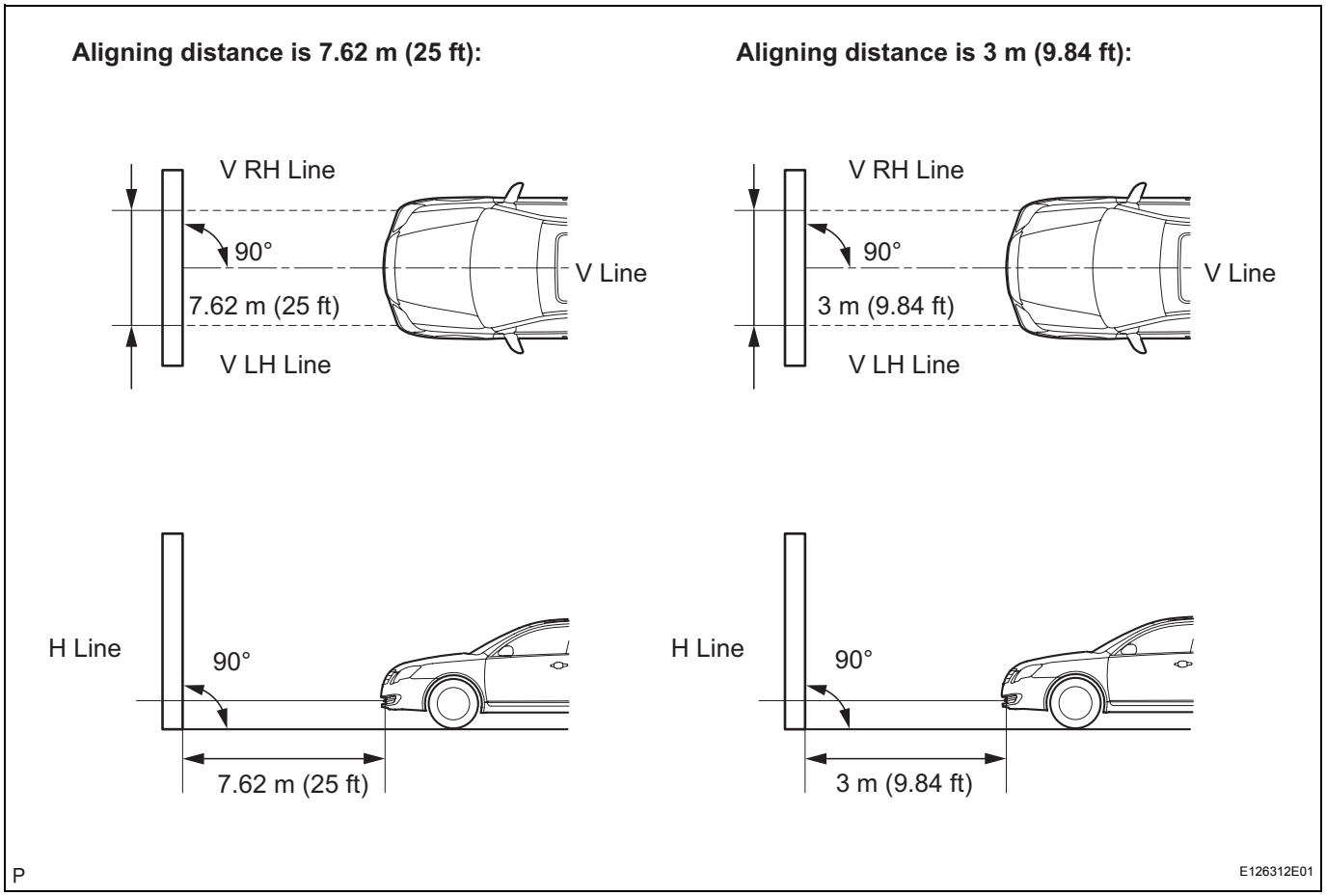

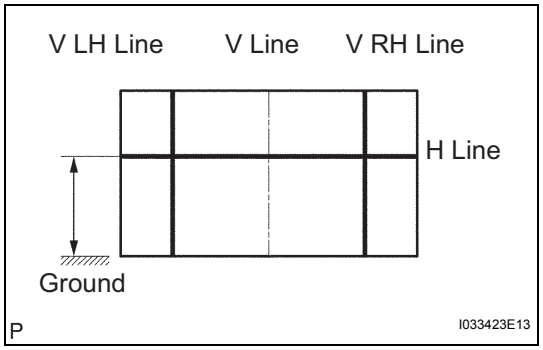

(e) Draw base lines (H line, V LH, V RH lines) on the screen as shown in the illustration.
HINT:
Mark the fog light bulb center marks on the screen. If the center mark cannot be observed on the fog light, use the center of the fog light bulb or the manufacturer's name marked on the fog light as the center mark.
(1) H Line (Fog light height):
Draw a horizontal line across the screen so that it passes through the center marks. The H line should be at the same height as the fog light bulb center marks of the low-beam fog lights.
(2) V LH Line, V RH Line (Center mark position of left-hand (LH) and right-hand (RH) fog lights):
Draw two vertical lines so that they intersect the H line at each center mark.

3. INSPECT FOG LIGHT AIMING

(a) Cover or disconnect the connector of the fog light on the opposite side to prevent light from the fog light not being inspected from affecting fog light aiming inspection.
(b) Start the engine.
NOTICE:
Engine rpm must be 1,500 or more.

(c) Turn on the fog light and make sure that the cutoff line falls within the specified area, as shown in the illustration.

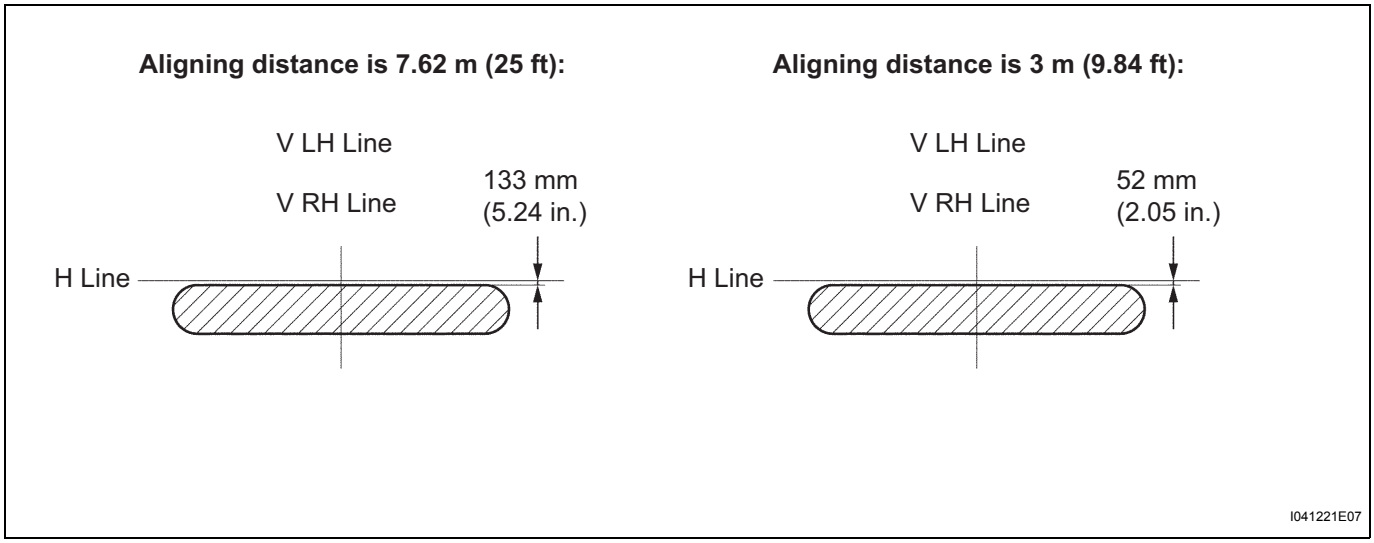

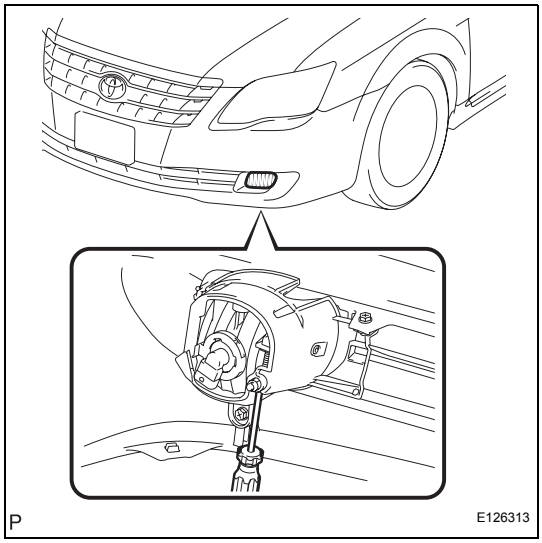

4. ADJUST FOG LIGHT AIMING

(a) Adjust the fog light aim into the specified range by turning the aiming screw with a screwdriver.

NOTICE:

The final turn of the aiming screw should be made in the clockwise direction. If the screw is tightened excessively, loosen and then retighten it, so that the final turn of the screw is in the clockwise direction.

REASSEMBLY

1. **INSTALL FOG LIGHT BULB**
2. **INSTALL FOG LIGHT BRACKET**

INSTALLATION

1. **INSTALL FOG LIGHT ASSEMBLY**
2. **INSTALL FRONT BUMPER ASSEMBLY (See page ET-4)**
3. **INSTALL RADIATOR GRILLE SUB-ASSEMBLY (See page ET-4)**

REAR COMBINATION LIGHT ASSEMBLY

COMPONENTS

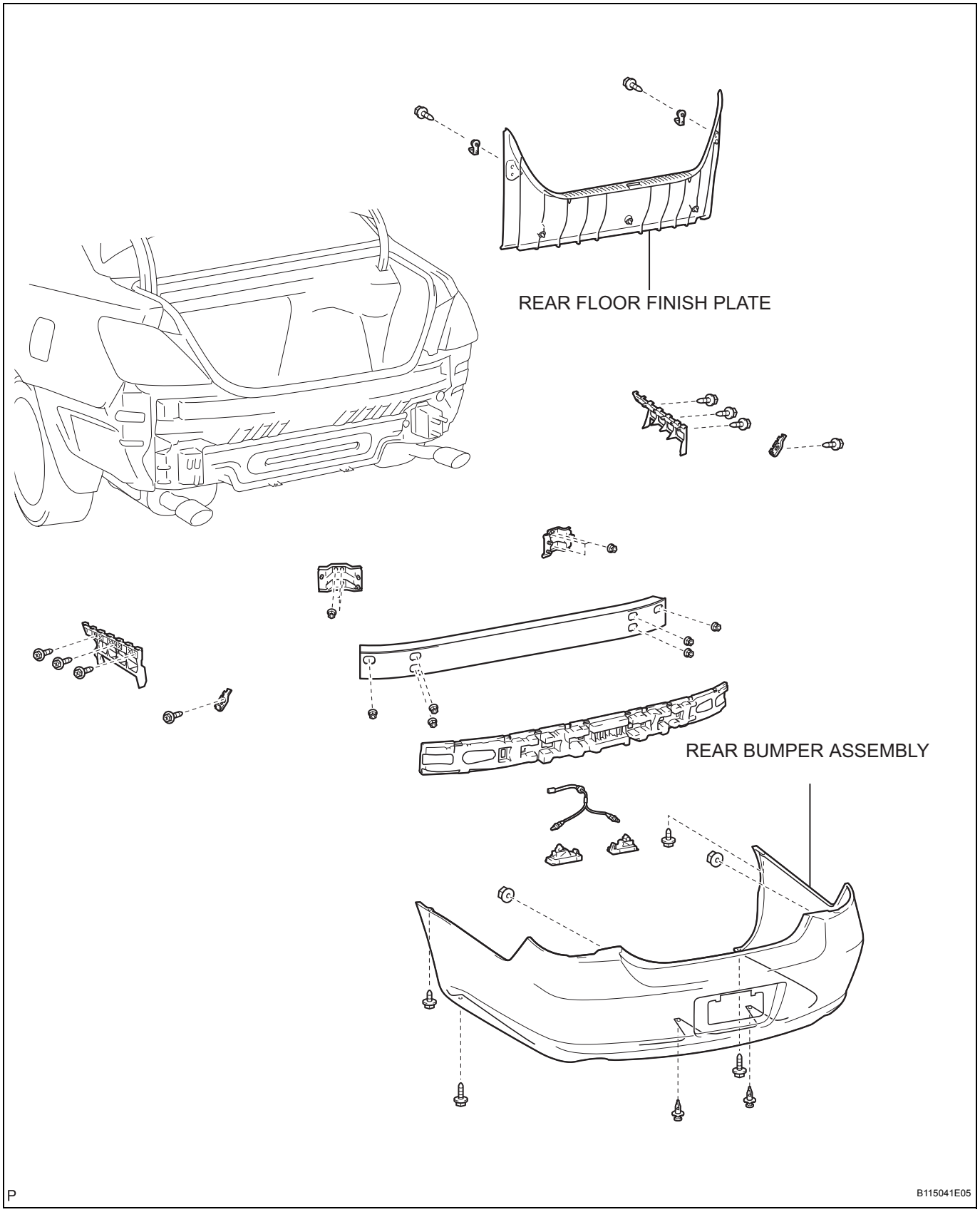

LI

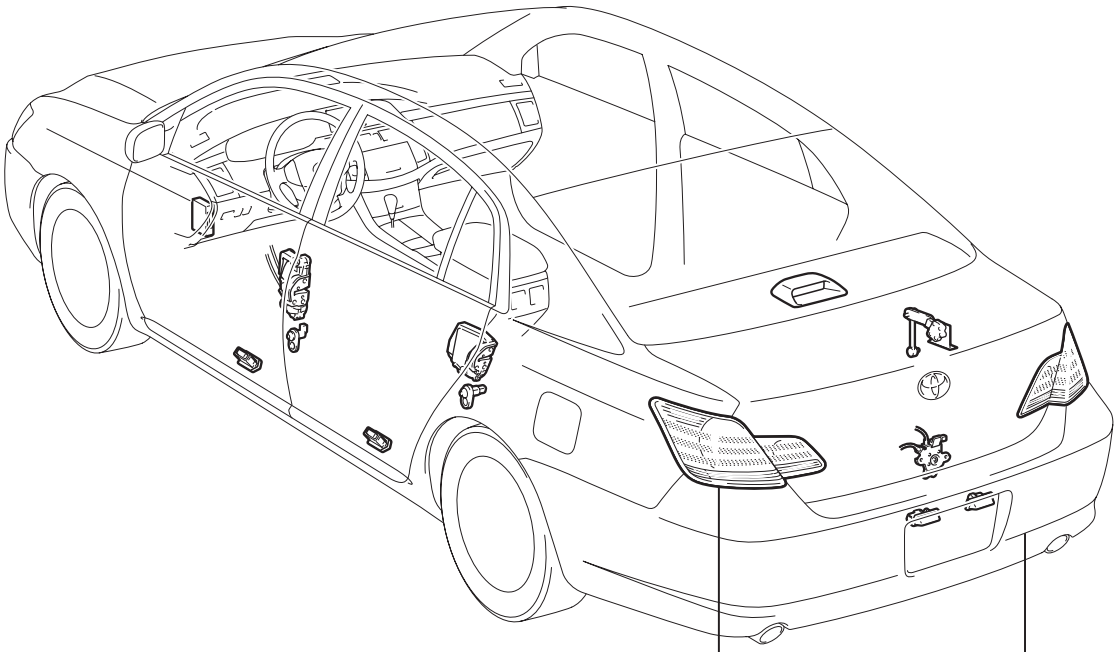

REAR BUMPER ASSEMBLY

REAR COMBINATION LIGHT ASSEMBLY LH

- REAR COMBINATION LIGHT BRACKET LH
- REAR COMBINATION LIGHT SOCKET & WIRE
- REAR COMBINATION LIGHT BULB
- REAR COMBINATION LIGHT BODY GASKET LH

P

E112676E06

Wire Harness Side:

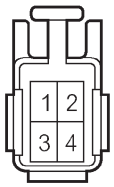

H

E075377E03

ON-VEHICLE INSPECTION

1. INSPECT REAR COMBINATION LIGHT ASSEMBLY

(a) Connect the (+) lead from the voltmeter to terminal 2 and the (-) lead from the voltmeter to terminal 3.

(b) Measure the voltage according to the value(s) in the table below.

Standard voltage

Tester Connection	Condition	Specified Condition
1 - 3	Light control switch OFF	Below 1 V
1 - 3	Light control switch TAIL	10 to 14 v
2 - 3	Brake pedal released	Below 1 V
2 - 3	Brake pedal depressed	10 to 14 v

REMOVAL

HINT:
- Use the same procedures for the RH side and LH side.
- The procedures listed below are for the LH side.
- Installation is in the reverse order of removal.

1. **REMOVE REAR FLOOR FINISH PLATE (See page ET-6)**
2. **REMOVE REAR BUMPER ASSEMBLY (See page ET-6)**
3. **REMOVE REAR COMBINATION LIGHT ASSEMBLY LH**
   (a) Disconnect the connector.
   (b) Remove the 3 nuts and the 2 bolts.
   (c) Remove the pin and the rear combination light assembly LH.

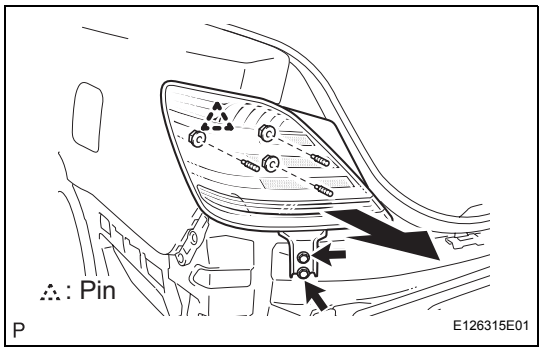

DISASSEMBLY

1. **REMOVE REAR COMBINATION LIGHT BRACKET LH**
   (a) Remove the 2 nuts and the rear combination light bracket LH.

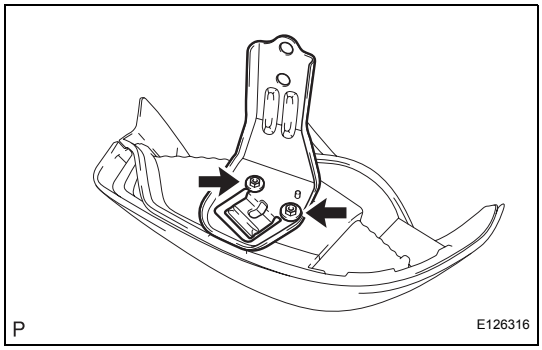

2. **REMOVE REAR COMBINATION LIGHT SOCKET & WIRE**
   (a) Remove the rear combination light socket & wire as shown in the illustration.
3. **REMOVE REAR COMBINATION LIGHT BULB**
4. **REMOVE REAR COMBINATION LIGHT BODY GASKET LH**

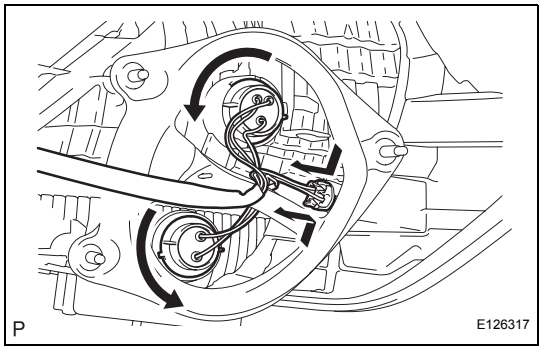

REASSEMBLY

1. **INSTALL REAR COMBINATION LIGHT BODY GASKET LH**
2. **INSTALL REAR COMBINATION LIGHT BULB**
3. **INSTALL REAR COMBINATION LIGHT SOCKET & WIRE**
4. **INSTALL REAR COMBINATION LIGHT BRACKET LH**

INSTALLATION

1. INSTALL REAR COMBINATION LIGHT ASSEMBLY LH
2. INSTALL REAR BUMPER ASSEMBLY (See page ET-8)
3. INSTALL REAR FLOOR FINISH PLATE

BACK-UP LIGHT ASSEMBLY

COMPONENTS

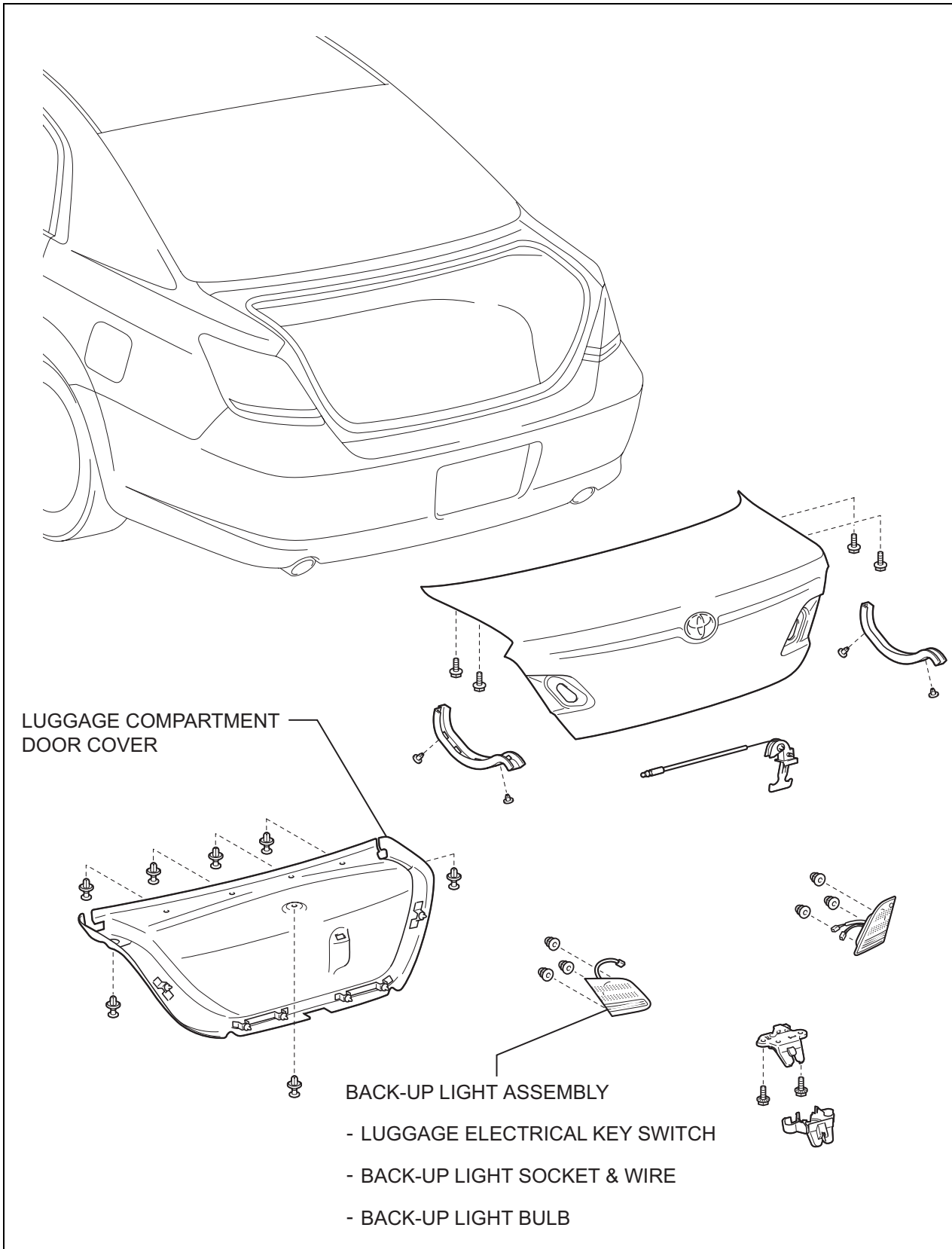

REMOVAL

HINT:
- Use the same procedures for the RH side and LH side.
- The procedures listed below are for the LH side.
- Installation is in the reverse order of removal.

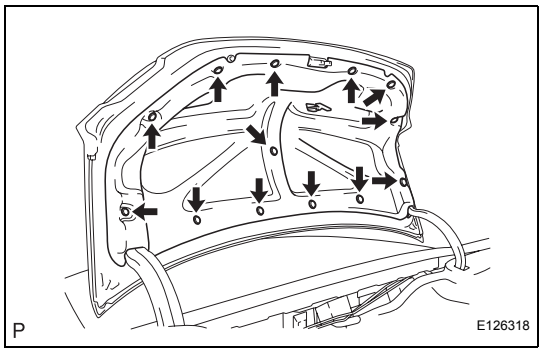

1. REMOVE LUGGAGE COMPARTMENT DOOR COVER
(a) Remove the 13 clips and the luggage compartment door cover.

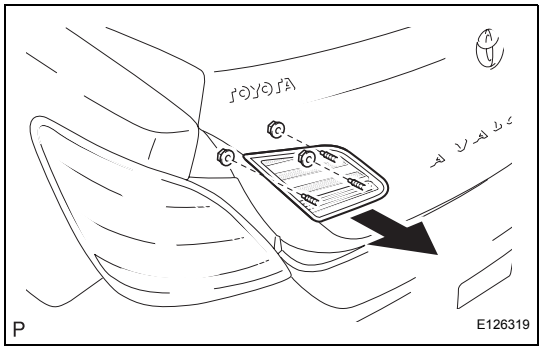

2. REMOVE BACK-UP LIGHT ASSEMBLY
(a) Disconnect the connector.
(b) Remove the 3 nuts and the rear light assembly LH.

DISASSEMBLY

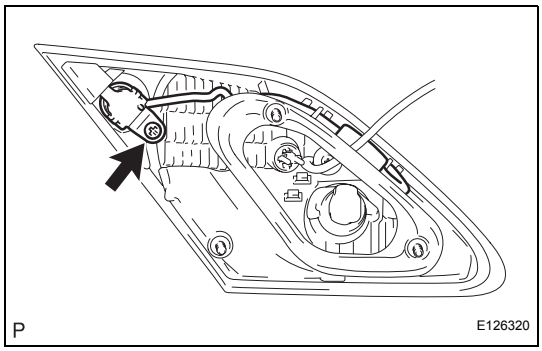

1. REMOVE LUGGAGE ELECTRICAL KEY SWITCH
(a) Remove the screw and the luggage electrical key switch.

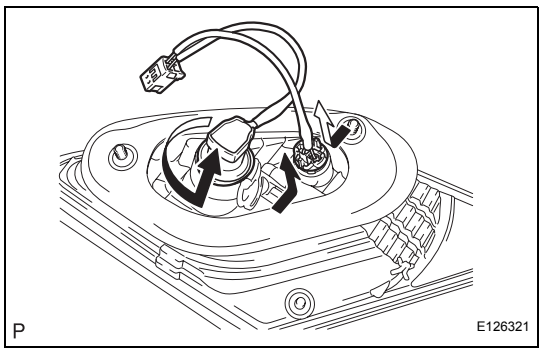

2. REMOVE BACK-UP LIGHT SOCKET & WIRE
(a) Remove the rear light socket & wire as shown in the illustration.

3. REMOVE BACK-UP LIGHT BULB

4. REMOVE BACK-UP LIGHT LH GASKET

REASSEMBLY

1. **INSTALL BACK-UP LIGHT LH GASKET**
2. **REMOVE BACK-UP LIGHT BULB**
3. **REMOVE REAR LIGHT SOCKET & WIRE**
4. **REMOVE LUGGAGE ELECTRICAL KEY SWITCH**

INSTALLATION

1. **INSTALL BACK-UP LIGHT ASSEMBLY**
2. **INSTALL LUGGAGE COMPARTMENT DOOR COVER**

LICENSE PLATE LIGHT ASSEMBLY

COMPONENTS

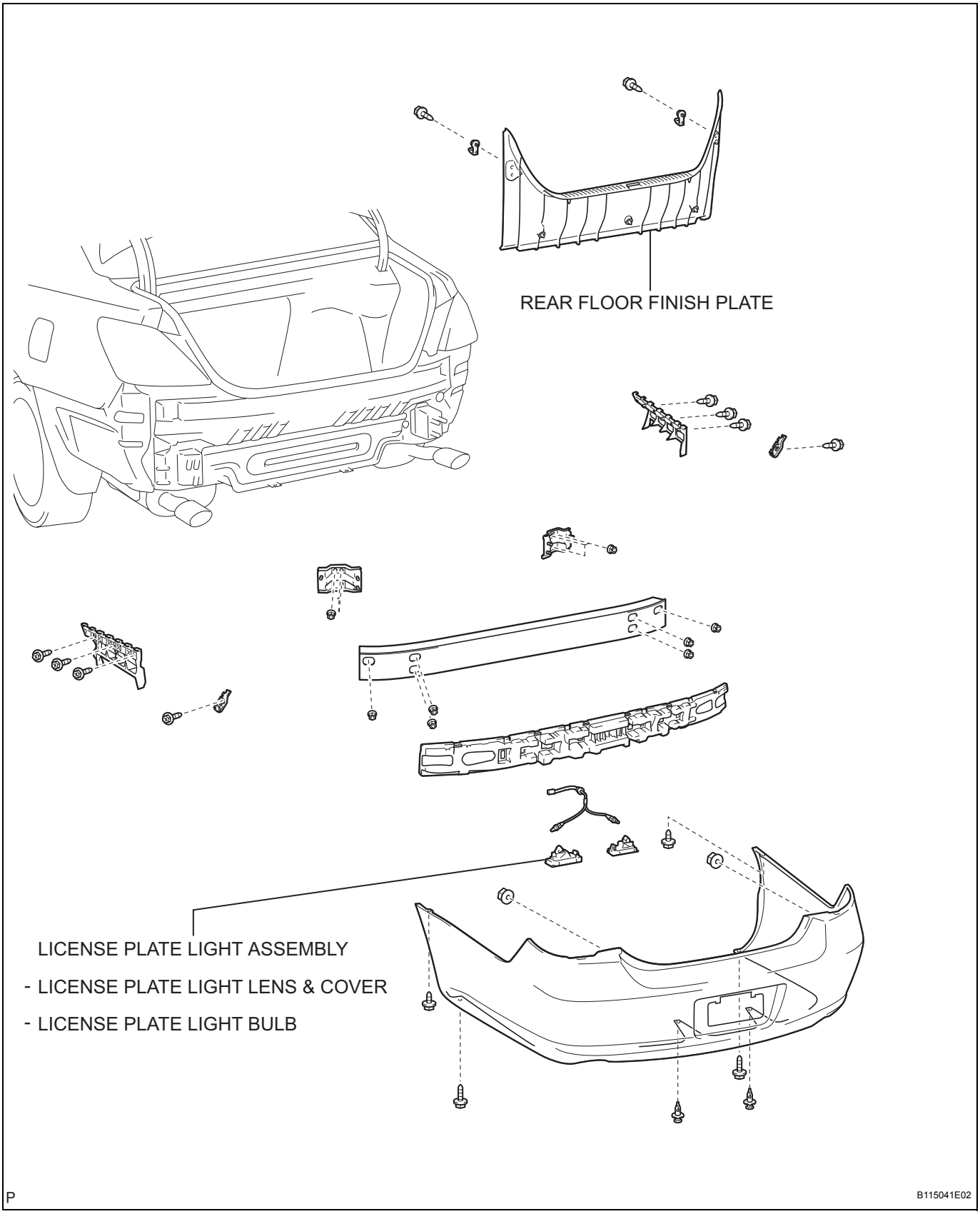

REMOVAL

HINT:
Installation is in the reverse order of removal.

1. **REMOVE REAR FLOOR FINISH PLATE (See page ET-6)**

2. **REMOVE LICENSE PLATE LIGHT ASSEMBLY**
   (a) Disconnect the connector.

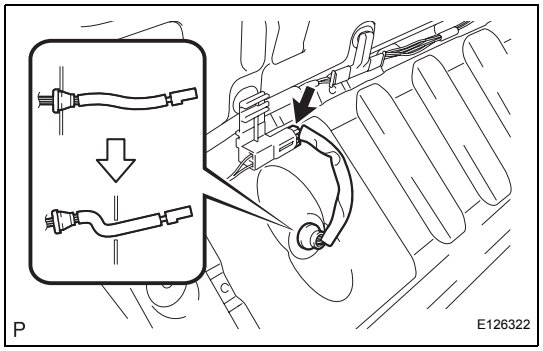

   (b) Remove the grommet as shown in the illustration.
   (c) Disengage the 2 claws and remove the license plate light assembly as shown in the illustration.

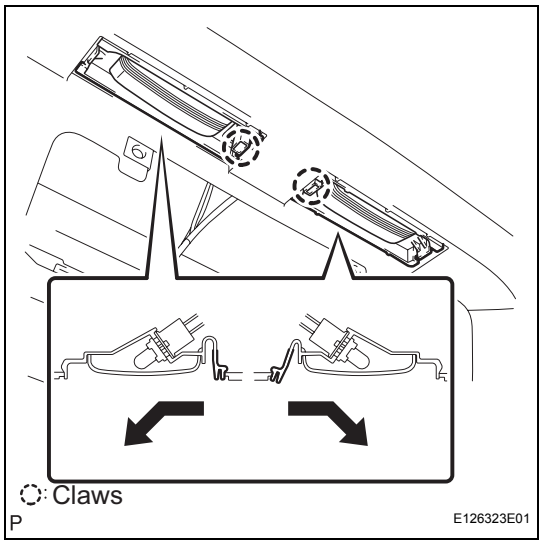

DISASSEMBLY

1. **REMOVE LICENSE PLATE LIGHT LENS & COVER**
   (a) Remove the license plate light lens & cover as shown in the illustration.

2. **REMOVE LICENSE PLATE LIGHT BULB**

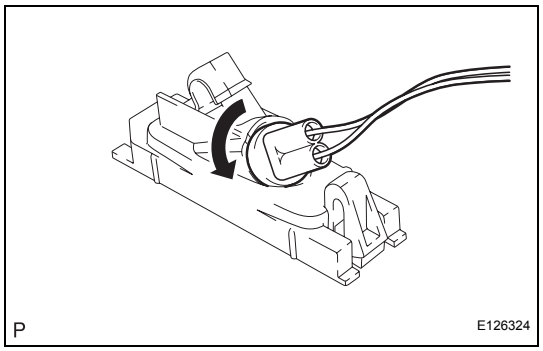

REASSEMBLY

1. **INSTALL LICENSE PLATE LIGHT BULB**
2. **INSTALL LICENSE PLATE LIGHT LENS & COVER**

INSTALLATION

1. **INSTALL LICENSE PLATE LIGHT ASSEMBLY**
2. **INSTALL REAR FLOOR FINISH PLATE**

HIGH MOUNTED STOP LIGHT ASSEMBLY

COMPONENTS

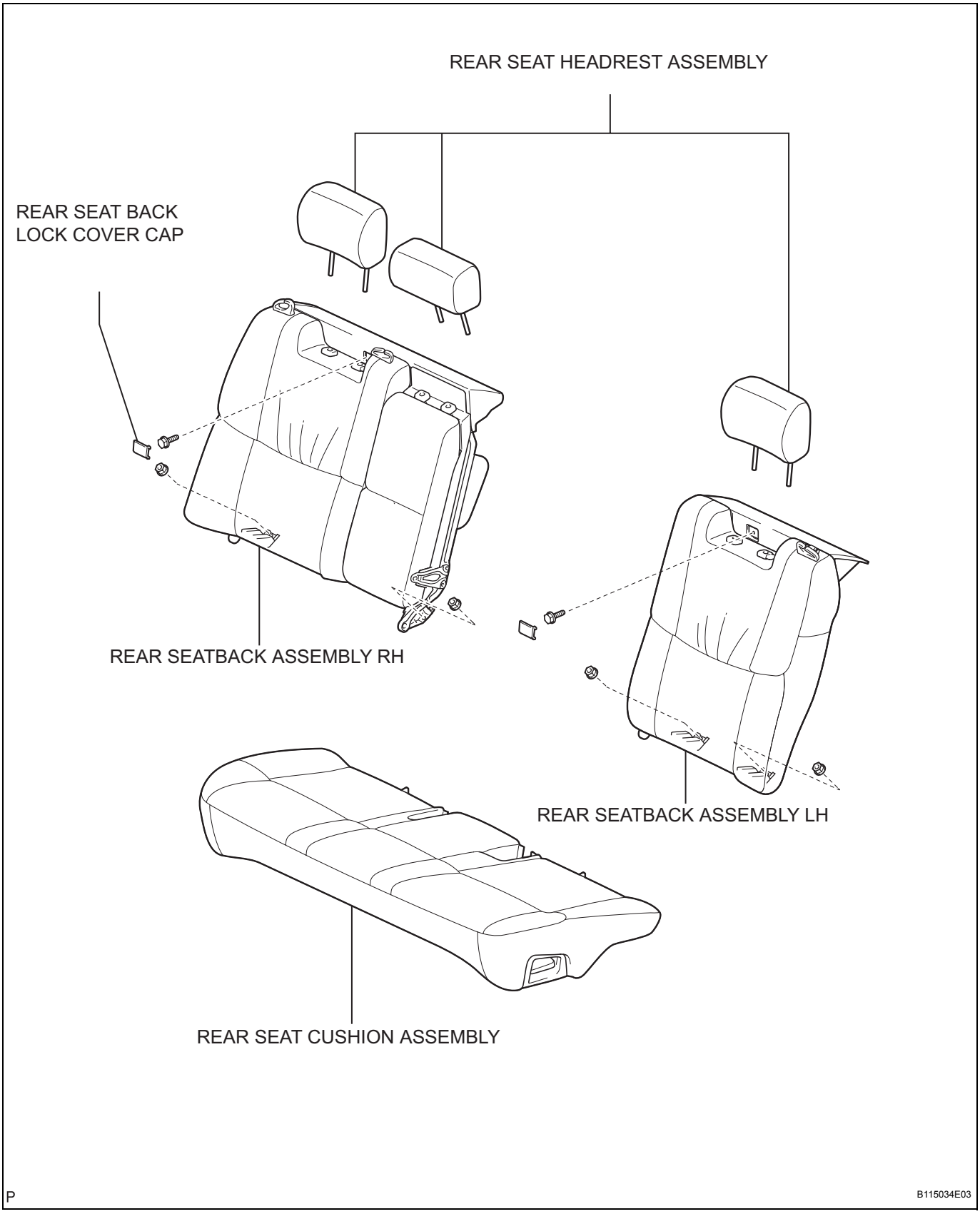

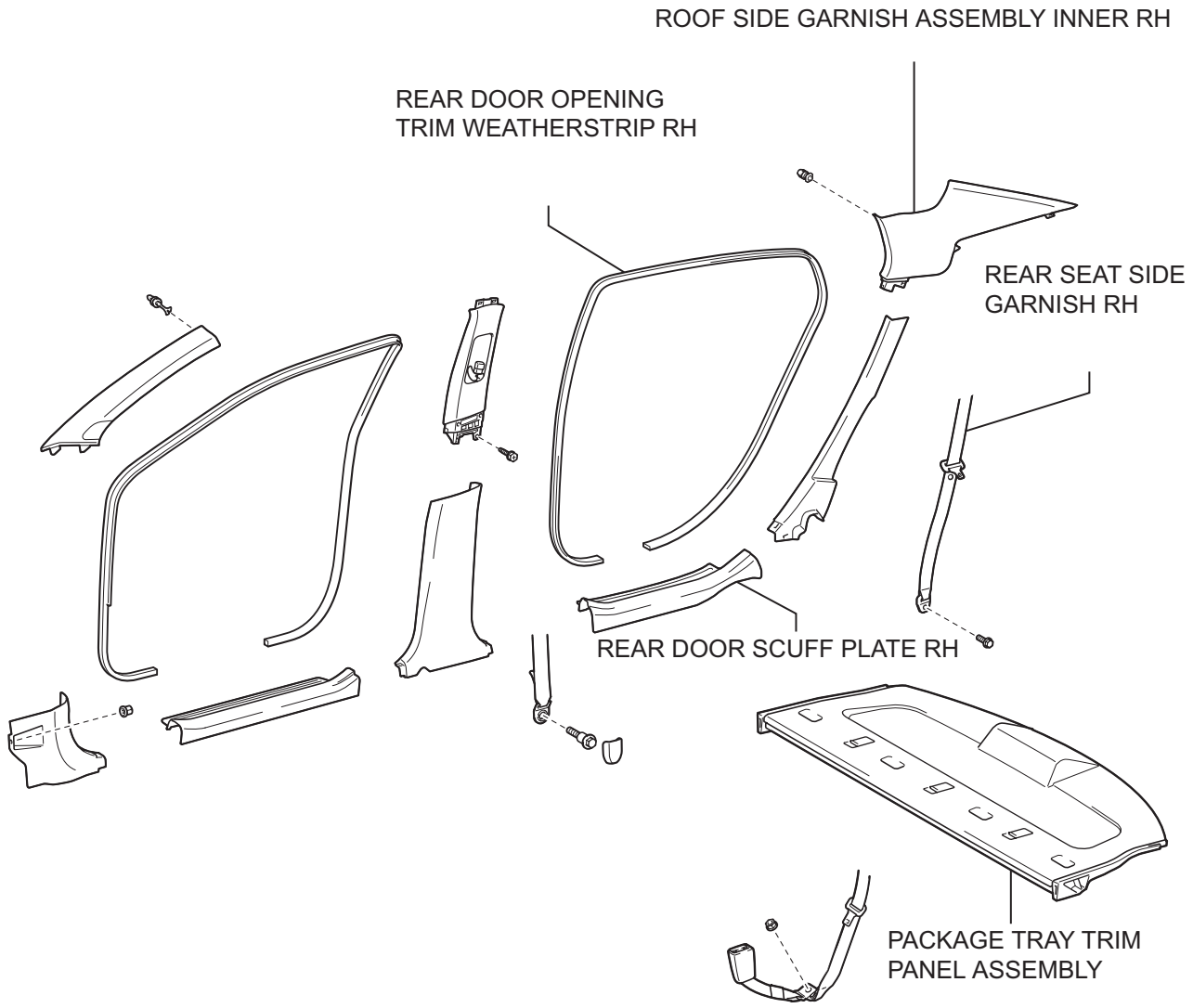
ROOF SIDE GARNISH ASSEMBLY INNER RH
REAR DOOR OPENING
TRIM WEATHERSTRIP RH
REAR SEAT SIDE
GARNISH RH
REAR DOOR SCUFF PLATE RH
PACKAGE TRAY TRIM
PANEL ASSEMBLY
P
B115060E01

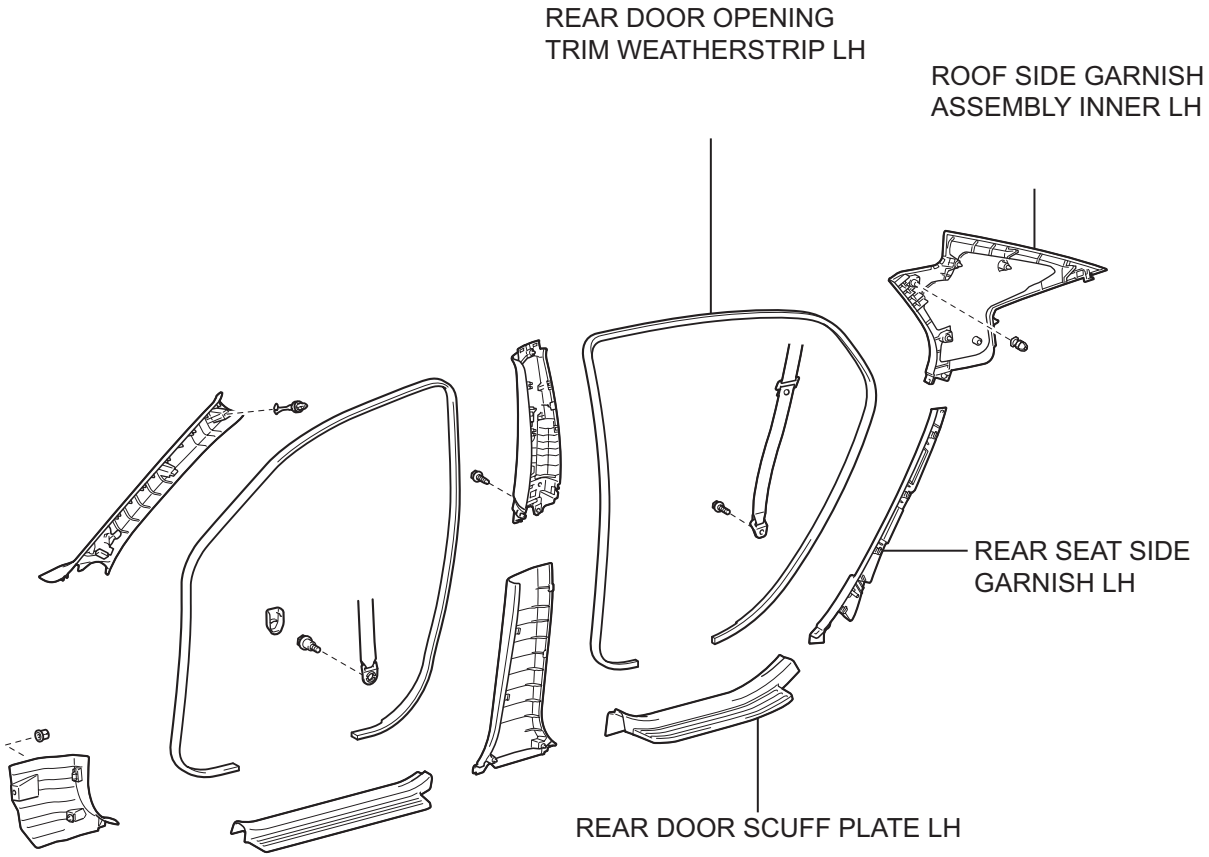

P

B115045E01

LI

HIGH MOUNTED STOP
LIGHT ASSEMBLY

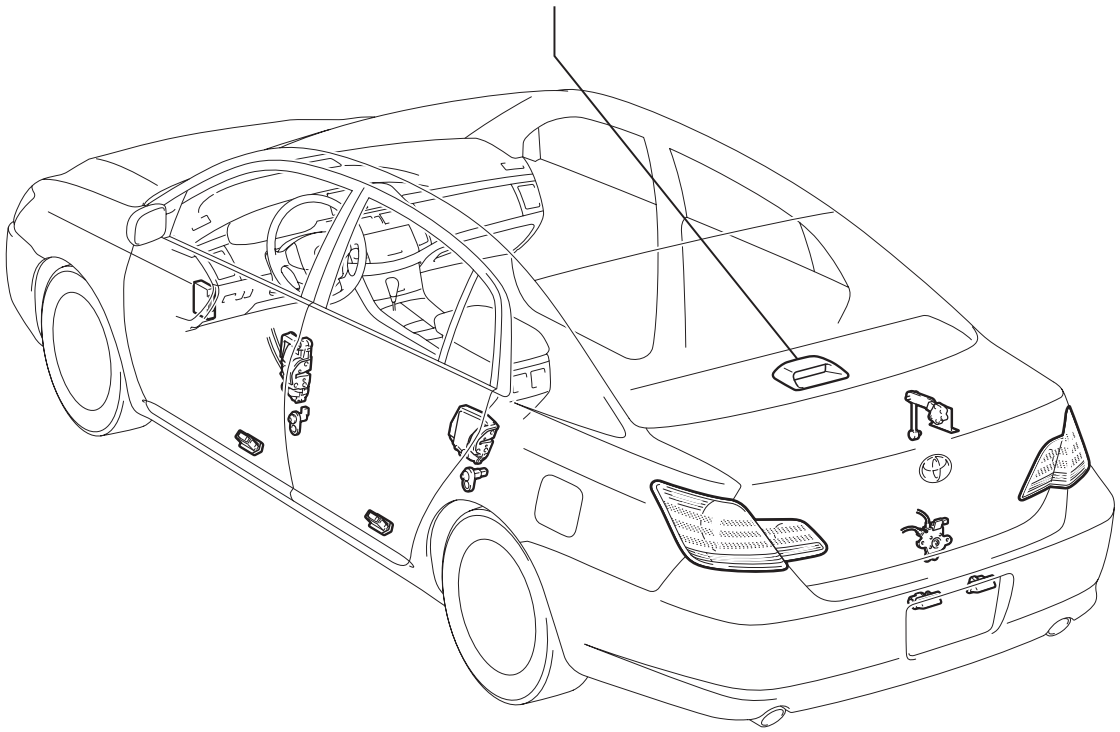

P

E112676E02

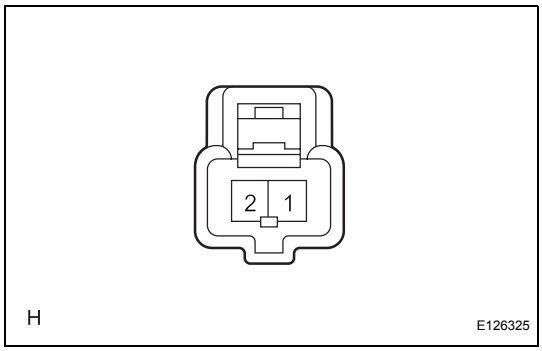

ON-VEHICLE INSPECTION

1. INSPECT CENTER STOP LIGHT ASSEMBLY

(a) Connect the (+) lead from the voltmeter to terminal 1 and the (-) lead from the voltmeter to terminal 2.

(b) Measure the voltage according to the value(s) in the table below.

Standard voltage

Tester Connection	Condition	Specified Condition
1 - 2	Brake pedal released	Below 1.5 V
1 - 2	Brake pedal depressed	8 to 14 V

REMOVAL

HINT:
installation is in the reverse order of removal.

1. **DISCONNECT BATTERY NEGATIVE TERMINAL**
2. **REMOVE REAR SEAT CUSHION ASSEMBLY (See page SE-68)**
3. **REMOVE REAR SEAT HEADREST ASSEMBLY**
4. **REMOVE REAR SEAT BACK LOCK COVER CAP (See page SE-68)**
5. **REMOVE REAR SEATBACK ASSEMBLY LH (See page SE-68)**
6. **REMOVE REAR SEATBACK ASSEMBLY RH (See page SE-69)**
7. **REMOVE REAR DOOR SCUFF PLATE LH (See page IR-12)**
8. **REMOVE REAR DOOR SCUFF PLATE RH (See page IR-12)**
9. **REMOVE REAR DOOR OPENING TRIM WEATHERSTRIP LH**
10. **REMOVE REAR DOOR OPENING TRIM WEATHERSTRIP RH**
11. **REMOVE REAR SEAT SIDE GARNISH LH (See page IR-14)**
12. **REMOVE REAR SEAT SIDE GARNISH RH (See page IR-14)**
13. **REMOVE ROOF SIDE GARNISH ASSEMBLY INNER LH (See page IR-14)**
14. **REMOVE ROOF SIDE GARNISH ASSEMBLY INNER RH (See page IR-14)**
15. **REMOVE PACKAGE TRAY TRIM PANEL ASSEMBLY (See page SB-31)**
16. **REMOVE CENTER STOP LIGHT ASSEMBLY**
    (a) Disconnect the connector.
    (b) Disengage the claw and remove the center stop light assembly.

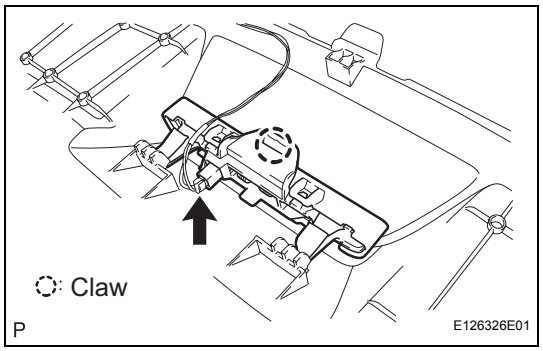

INSTALLATION

1. **INSTALL PACKAGE TRAY TRIM PANEL ASSEMBLY**
2. **INSTALL REAR SEATBACK ASSEMBLY RH (See page SE-76)**
3. **INSTALL REAR SEATBACK ASSEMBLY LH (See page SE-77)**
4. **INSTALL REAR SEAT CUSHION ASSEMBLY**
5. **INSTALL ROOF SIDE GARNISH ASSEMBLY INNER LH (See page IR-19)**
6. **INSTALL ROOF SIDE GARNISH ASSEMBLY INNER RH (See page IR-19)**
7. **INSTALL REAR SEATBACK ASSEMBLY RH (See page SE-76)**
8. **INSTALL REAR SEATBACK ASSEMBLY LH (See page SE-77)**
9. **INSTALL REAR SEAT CUSHION ASSEMBLY**
10. **CONNECT BATTERY NEGATIVE TERMINAL**
11. **PERFORM INITIALIZATION**
    (IN-29)
12. **INSPECT SRS WARNING LIGHT**
    (AC-37)

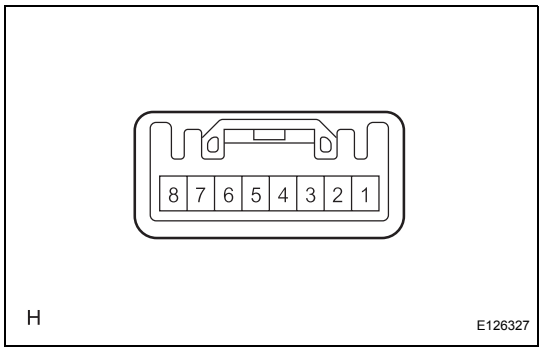

PERSONAL LIGHT ASSEMBLY

INSPECTION

1. INSPECT PERSONAL LIGHT ASSEMBLY

(a) Measure the resistance according to the value(s) in the table below.

Resistance

Tester connection	Condition	Specified condition
4 - 2	OFF	10 kΩ or higher
4 - 2	Driver side personal light switch ON	Continuity
4 - 2	Passenger side personal light switch ON	Continuity

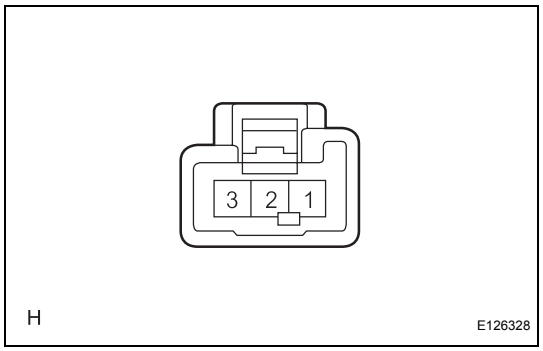

REAR ROOM LIGHT ASSEMBLY

INSPECTION

1. INSPECT REAR ROOM LIGHT ASSEMBLY

(a) Connect the (+) lead from the battery to terminal 3 and the (-) lead to terminal 2, and check that the rear room light comes on when the switch is in the ON position.

OK:

The light comes on.

(b) Connect the (+) lead from the battery to terminal 3 and the (-) lead to terminal 1, and check that the rear room light comes on when the switch is in the DOOR position.

OK:

The light comes on.

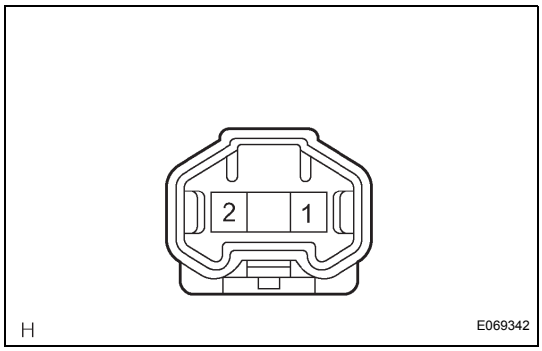

DOOR COURTESY LIGHT

INSPECTION

1. INSPECT COURTESY LIGHT ASSEMBLY

(a) Inspect the courtesy light.

(1) Connect the (+) lead from the battery to terminal 2 and the (-) lead to terminal 1, then check that the courtesy light comes on.

OK:

The light comes on.

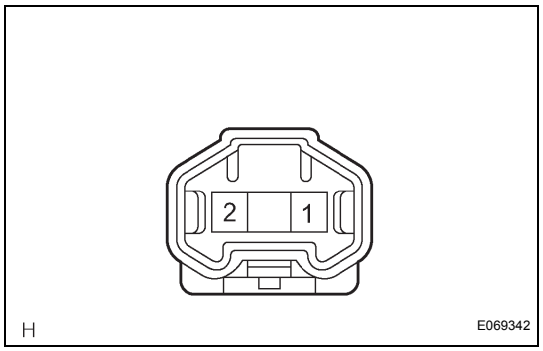

LUGGAGE COMPARTMENT ROOM LIGHT

INSPECTION

1. INSPECT LUGGAGE COMPARTMENT LIGHT ASSEMBLY

(a) Inspect the luggage compartment light.

(1) Connect the (+) lead from the battery to terminal 1 and the (-) lead to terminal 2, then check that the luggage compartment light comes on.

OK:

The light comes on.

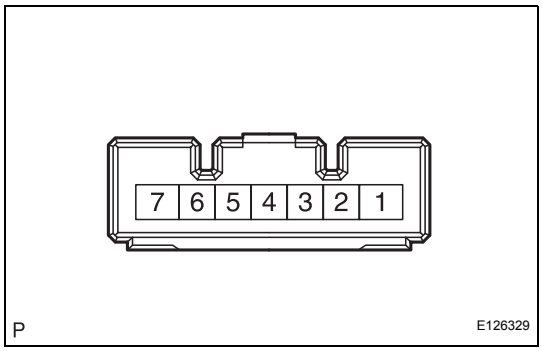

IGNITION KEY CYLINDER LIGHT

INSPECTION

1. INSPECT TRANSPONDER KEY AMPLIFIER

(a) Inspect key cylinder light operation.

(1) Connect the (+) lead from the battery to terminal 2 and the (-) lead to terminal 6, and check that the light comes on.

Standard:

The light comes on.

VANITY LIGHT

INSPECTION

1. INSPECT LH VISOR ASSEMBLY

(a) Measure the resistance according to the value(s) in the table below.

Standard resistance

Switch operation	Specified condition
ON (Open)	Below 1 Ω
OFF (Close)	10 kΩ or higher

2. INSPECT RH VISOR ASSEMBLY

(a) Measure the resistance according to the value(s) in the table below.

Standard resistance

Switch operation	Specified condition
ON (Open)	Below 1 Ω
OFF (Close)	10 kΩ or higher

HEADLIGHT DIMMER SWITCH

COMPONENTS

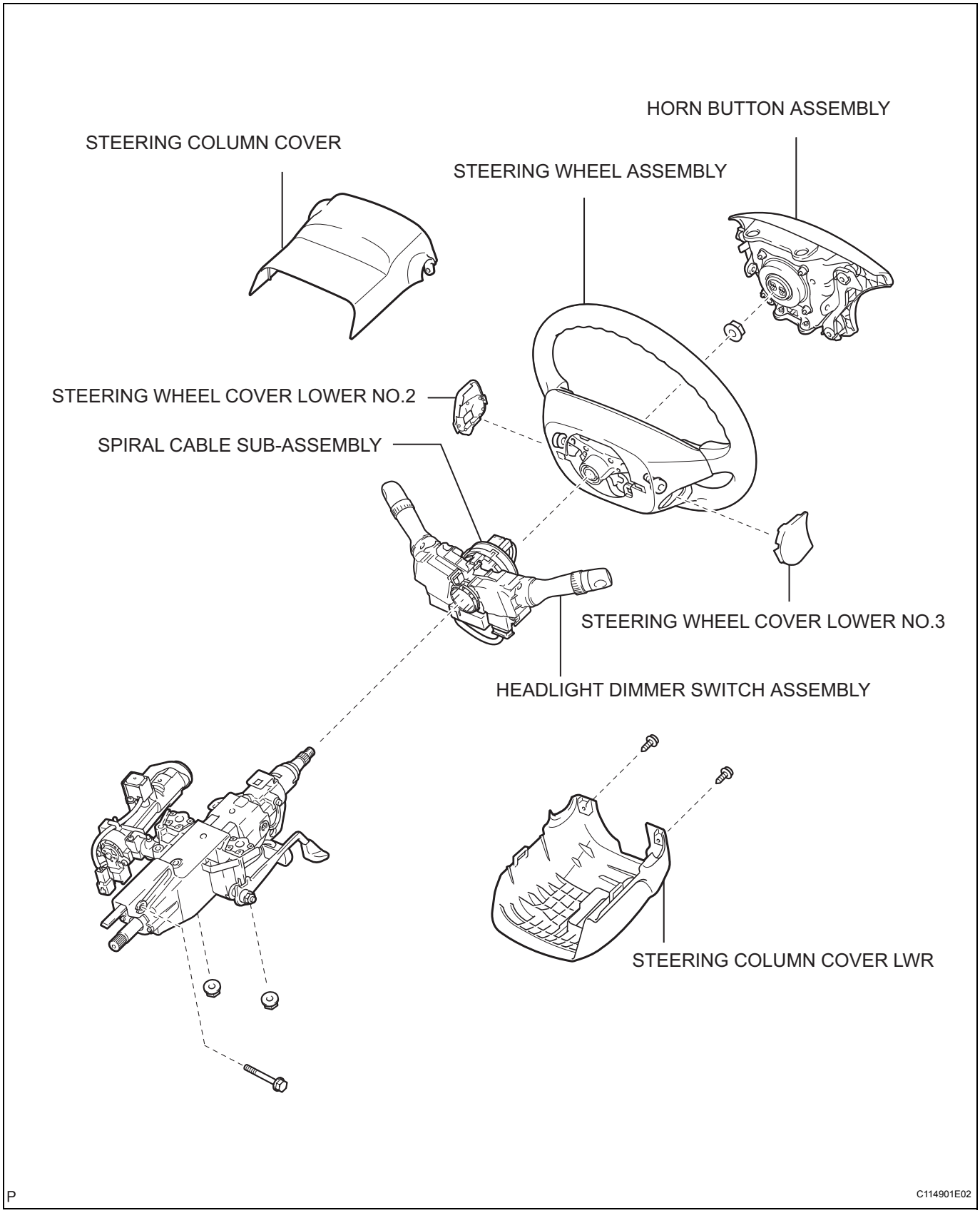

REMOVAL

HINT:
Install is in the reverse order of removal.

1. **DISCONNECT BATTERY NEGATIVE TERMINAL**
   (a) Wait for 90 seconds after disconnecting the cable to prevent the airbag working.
2. **PLACE FRONT WHEELS FACING STRAIGHT AHEAD**
3. **REMOVE STEERING WHEEL COVER LOWER NO.3 (See page RS-304)**
4. **REMOVE STEERING WHEEL COVER LOWER NO.2 (See page RS-304)**
5. **REMOVE HORN BUTTON ASSEMBLY (See page RS-304)**
6. **REMOVE STEERING WHEEL ASSEMBLY (See page SR-36)**
7. **REMOVE STEERING COLUMN COVER LWR (See page SR-36)**
8. **REMOVE STEERING COLUMN COVER (See page SR-36)**
9. **REMOVE SPIRAL CABLE SUB-ASSEMBLY**
10. **REMOVE HEADLIGHT DIMMER SWITCH ASSEMBLY**
    (a) Disconnect the connector.
    (b) Disengage the clamp from the headlight dimmer switch assembly as shown in the illustration.

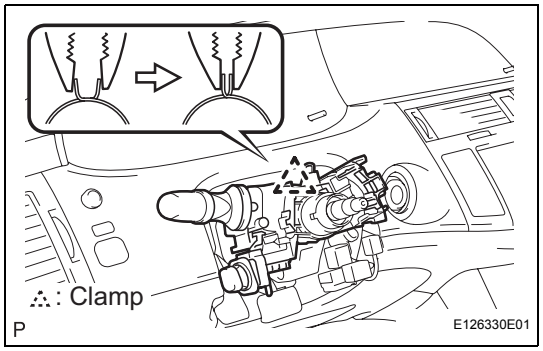

    (c) Disengage the claw and remove the headlight dimmer switch assembly as shown in the illustration.

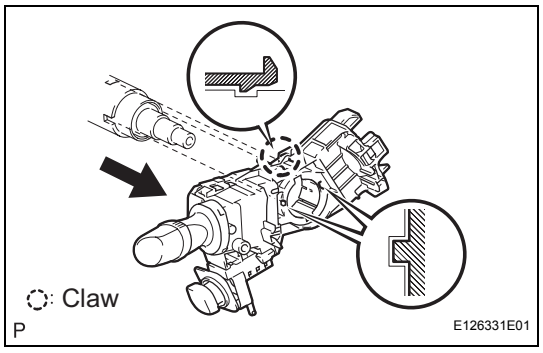

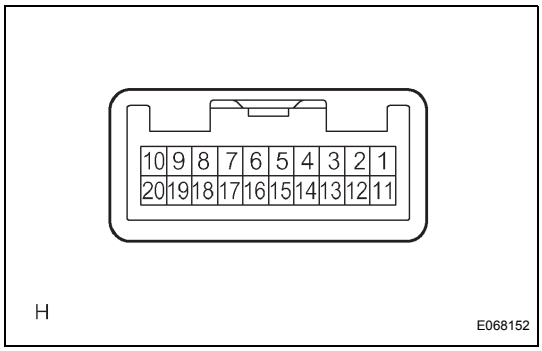

INSPECTION

1. INSPECT HEADLIGHT DIMMER SWITCH ASSEMBLY

(a) Inspect the light control switch.

(1) Measure the resistance according to the value(s) in the table below.

Standard resistance

Tester Connection	Switch Condition	Specified Condition
19 - 11 - 13 - 12	OFF	10 kΩ or higher
19 - 13	TAIL	Below 1 Ω
19 - 11 - 13	HEAD	Below 1 Ω
19 - 12	AUTO	Below 1 Ω

(b) Inspect the headlight dimmer switch.

(1) Measure the resistance according to the value(s) in the table below.

Standard resistance

Tester Connection	Switch Condition	Specified Condition
14 - 19	FLASH	Below 1 Ω
19 - 20	LOW BEAM	Below 1 Ω
15 - 19	HI BEAM	Below 1 Ω

(c) Inspect the turn signal switch.

(1) Measure the resistance according to the value(s) in the table below.

Standard resistance

Tester Connection	Switch Condition	Specified Condition
16 - 17 - 19	Right turn	Below 1 Ω
16 - 17 - 18 - 19	Neutral	10 kΩ or higher
17 - 19 - 18	Left turn	Below 1 Ω

(d) Inspect the front fog light switch.

(1) Measure the resistance according to the value(s) in the table below.

Standard resistance

Tester Connection	Switch Condition	Specified Condition
7 - 8	OFF	10 kΩ or higher
7 - 8	Fog light switch ON	Below 1 Ω

(e) Inspect the rear fog light switch.

(1) Measure the resistance according to the value(s) in the table below.

Standard resistance

Tester Connection	Switch Condition	Specified Condition
7 - 8 - 9	OFF	10 kΩ or higher
7 - 8 - 9	ON	Below 1 Ω

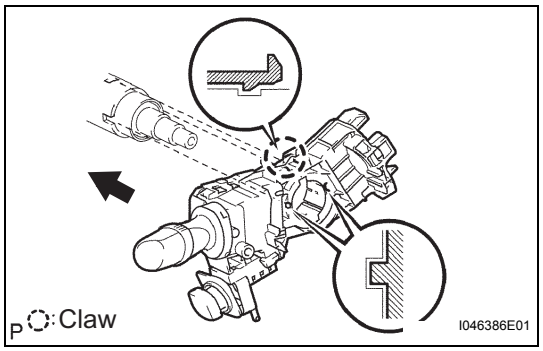

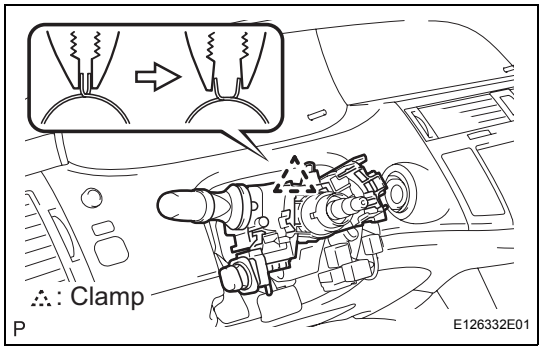

INSTALLATION

1. **INSTALL HEADLIGHT DIMMER SWITCH ASSEMBLY**
   (a) Install the headlight dimmer switch assembly with the claw as shown in the illustration.
   HINT:
   Make sure that the claw is completely engaged.

   (b) Install the headlight dimmer switch assembly with the clamp.
   (c) Connect the connector.
2. **INSTALL SPIRAL CABLE SUB-ASSEMBLY**
3. **INSTALL STEERING COLUMN COVER (See page SR-46)**
4. **INSTALL STEERING COLUMN COVER LWR (See page SR-46)**
5. **ADJUST SPIRAL CABLE SUB-ASSEMBLY**
6. **INSTALL STEERING WHEEL ASSEMBLY (See page SR-46)**
7. **INSPECT STEERING WHEEL CENTER POINT (See page SR-47)**
8. **INSTALL HORN BUTTON ASSEMBLY (See page RS-305)**
9. **INSTALL STEERING WHEEL COVER LOWER NO.2 (See page RS-305)**
10. **INSTALL STEERING WHEEL COVER LOWER NO.3 (See page RS-305)**
11. **CONNECT BATTERY NEGATIVE TERMINAL**
12. **INSPECT HORN BUTTON ASSEMBLY**
13. **INSPECT SRS WARNING LIGHT**
    (RS-1)
14. **PERFORM INITIALIZATION**
    (a) Some systems need initialization when disconnecting the cable from the negative battery terminal (IN-29).

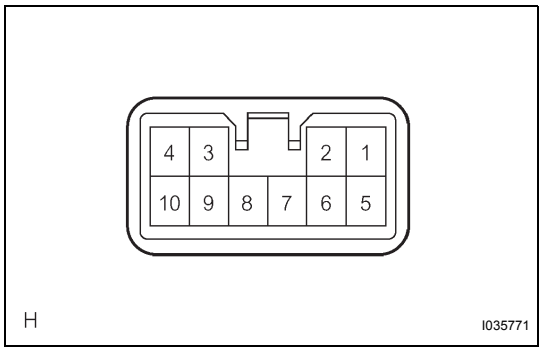

HAZARD WARNING SWITCH

INSPECTION

1. INSPECT HAZARD WARNING SIGNAL SWITCH ASSEMBLY

(a) Measure the resistance according to the value(s) in the table below.

Standard resistance

Tester Connection	Condition	Specified Condition
5 - 6	Hazard warning switch ON	Below 1 Ω
5 - 6	Hazard warning switch OFF	10 kΩ or higher

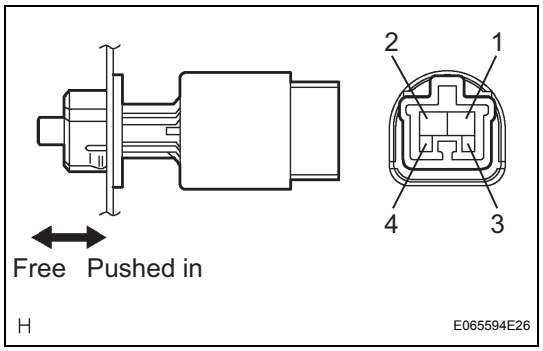

STOP LIGHT SWITCH

INSPECTION

1. INSPECT STOP LIGHT SWITCH ASSEMBLY

(a) Inspect the stop light switch assembly.

(1) Measure the resistance according to the value(s) in the table below.

Standard resistance

Tester Connection	Switch Condition	Specified Condition
1 - 2	Switch pin free	10 kΩ or higher
3 - 4	Switch pin free	Below 1 Ω
1 - 2	Switch pin pushed in	Below 1 Ω
3 - 4	Switch pin pushed in	10 kΩ or higher

FRONT DOOR COURTESY SWITCH

INSPECTION

1. INSPECT FRONT DOOR COURTESY LIGHT SWITCH

(a) Measure the resistance according to the value(s) in the table below.

Standard resistance

Switch operation	Specified condition
ON (When the shaft is pressed)	10 kΩ or higher
OFF (When the shaft is not pressed)	Below 1 Ω

REAR DOOR COURTESY SWITCH

INSPECTION

1. INSPECT REAR DOOR COURTESY LIGHT SWITCH

(a) Measure the resistance according to the value(s) in the table below.

Standard resistance

Switch operation	Specified condition
ON (When the shaft is pressed)	10 kΩ or higher
OFF (When the shaft is not pressed)	Below 1 Ω

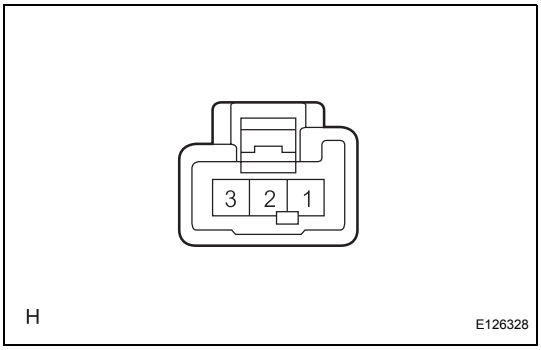

BACK DOOR COURTESY SWITCH

INSPECTION

1. INSPECT LUGGAGE COMPARTMENT DOOR LOCK ASSEMBLY

(a) Measure the resistance according to the value(s) in the table below.

Standard resistance

Tester connection	Condition	Specified condition
2 - 3	Back door is closed	10 kΩ or higher
2 - 3	Back door is open	Below 1 Ω

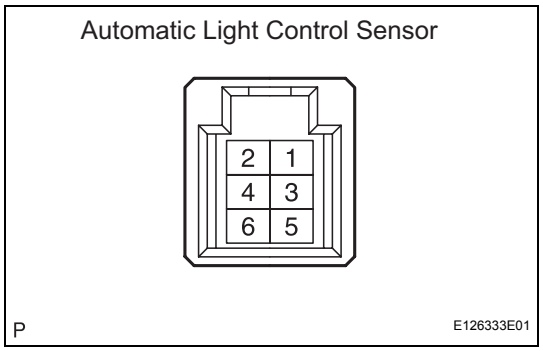

AUTOMATIC LIGHT CONTROL SENSOR

ON-VEHICLE INSPECTION

1. INSPECT AUTOMATIC LIGHT CONTROL SENSOR

(a) Measure the continuity, waveform and voltage according to the value(s) in the table below.

NOTICE:

With connector connected, perform inspection from the backside of the connector.

Standard voltage

Tester connection	Condition	Specified condition
6 - 3	Always	10 to 14 V
5 - 3	Ignition switch on (IG), Headlight dimmer SW in AUTO	Pulse generation (See waveform 1)

Standard resistance

Tester connection	Condition	Specified condition
3 - Body ground	Always	Below 1 Ω

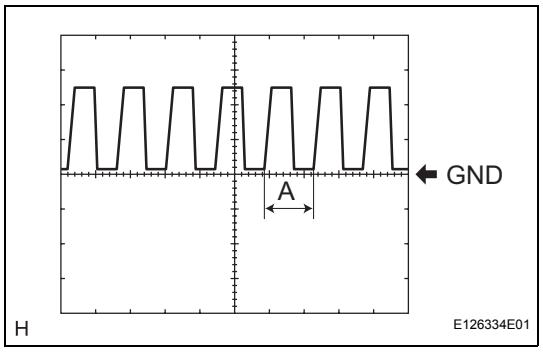

(b) Waveform 1

Item	Description
Terminal	CLTS (5) - CLTE (3)
Gauge	5 V/DIV, 5 ms/DIV
Condition	Ignition switch ON (IG), Headlight dimmer SW in AUTO

HINT:

If the ambient light becomes brighter, width A will become narrower.

HEIGHT CONTROL SENSOR

COMPONENTS

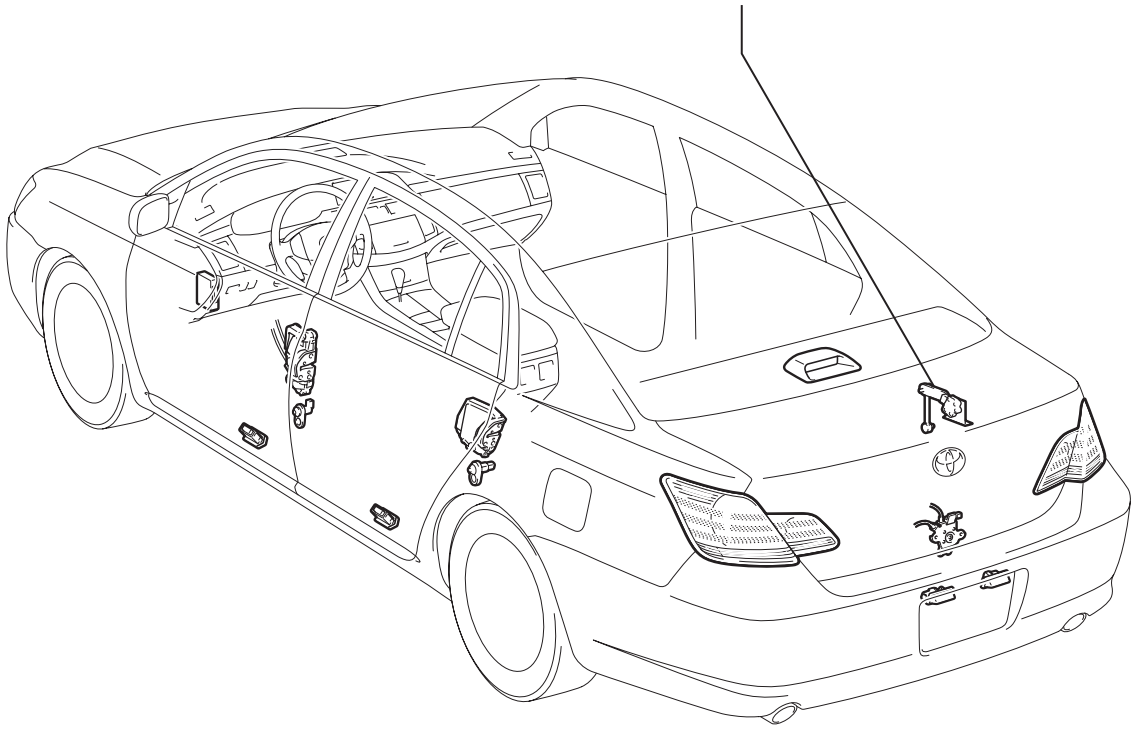

P

E112743E01

REMOVAL

HINT:
Installation is in the reverse order of removal.

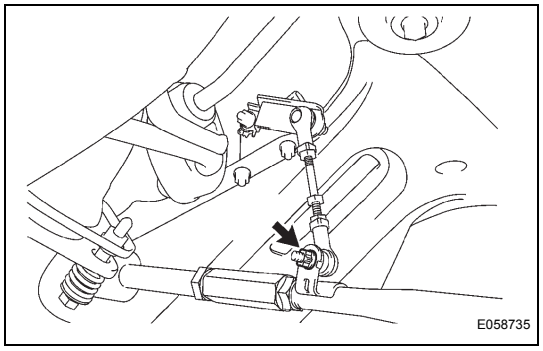

1. REMOVE HEIGHT CONTROL SENSOR SUB-ASSEMBLY REAR RH

(a) Disconnect the connector.
(b) Place matchmarks with the one on the height control sensor sub-assembly rear RH and bracket.
(c) Remove a nut.

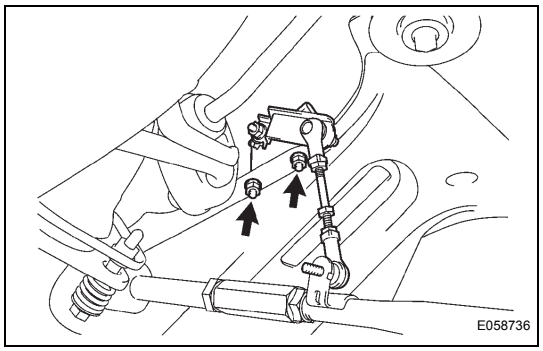

(d) Remove the 2 nuts and height control sensor sub-assembly rear RH.

INSTALLATION

1. **INSTALL HEIGHT CONTROL SENSOR SUB-ASSEMBLY REAR RH**
   (a) Install the height control sensor link rear RH with the 2 nuts.
   Torque: 8.0 N*m (81 kgf*cm, 71 in.*lbf)
   (b) Align the matchmarks with the one on the height control sensor sub-assembly rear RH and bracket.
   (c) Install the height control sensor sub-assembly rear RH.
   Torque: 5.4 N*m (55 kgf*cm, 48 in.*lbf)
   (d) Connect the connector.
   (e) Install a nut.
   (f) When the work like the vehicle height may be changed is performed, for example, removal and installation of the height control sensor, or replacement of the suspension, etc., initialize the sensor, then adjust the optical axis (See page LI-16).
2. **VEHICLE PREPARATION FOR HEADLIGHT AIM ADJUSTMENT (See page LI-114)**
3. **PREPARATION FOR HEADLIGHT AIMING (Using a tester) (See page LI-114)**
4. **PREPARATION FOR HEADLIGHT AIMING (Using a screen) (See page LI-114)**
5. **HEADLIGHT AIMING INSPECTION (See page LI-116)**
6. **HEADLIGHT AIMING ADJUSTMENT (See page LI-117)**

HEADLIGHT LEVELING ECU

COMPONENTS

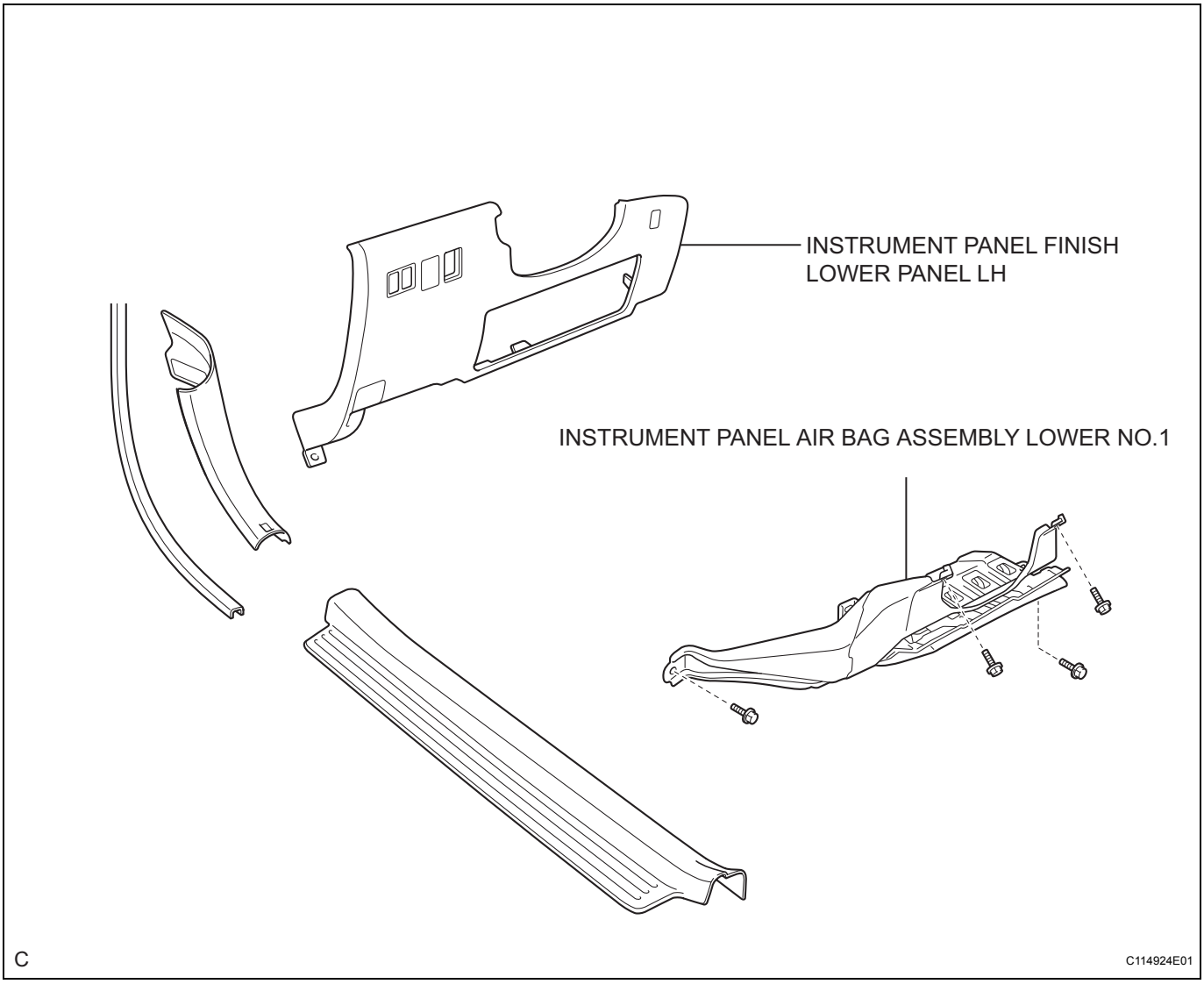

HEADLIGHT LEVELING ECU ASSEMBLY

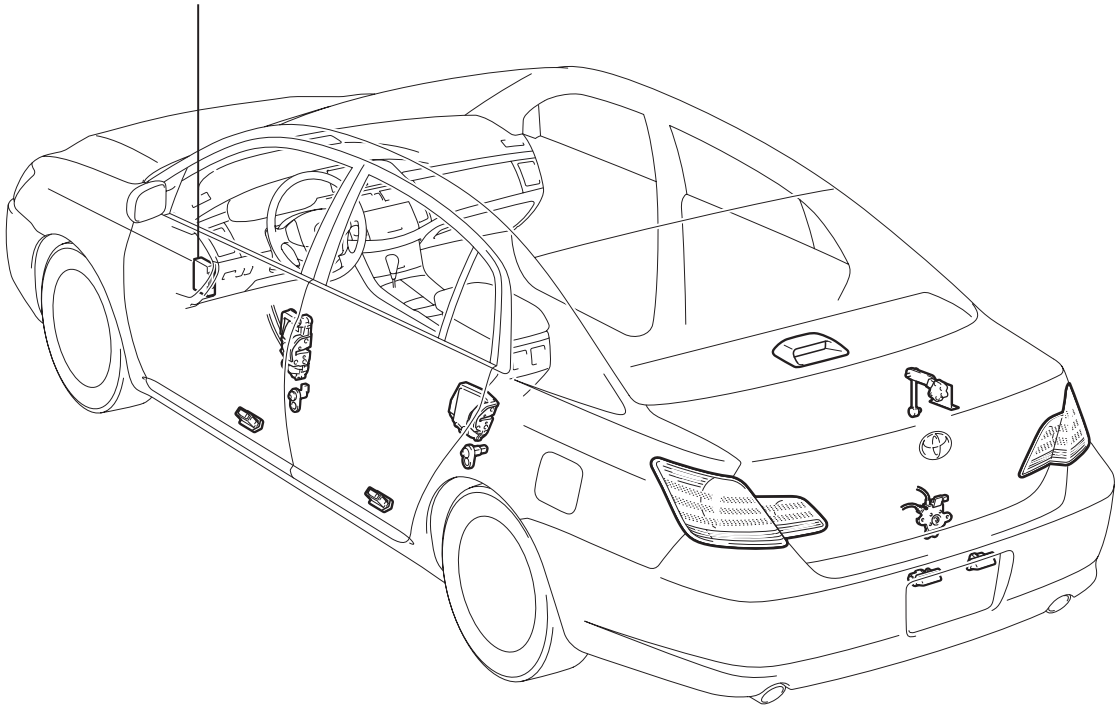

P

E112676E03

REMOVAL

HINT:
Installation is in the reverse order of removal.

1. **REMOVE INSTRUMENT PANEL FINISH LOWER PANEL LH**
2. **REMOVE INSTRUMENT PANEL AIR BAG ASSEMBLY LOWER NO.1**
3. **REMOVE HEADLIGHT LEVELING ECU ASSEMBLY**
   (a) Disconnect the connector.
   (b) Remove the bolt and the headlight leveling ECU assembly.

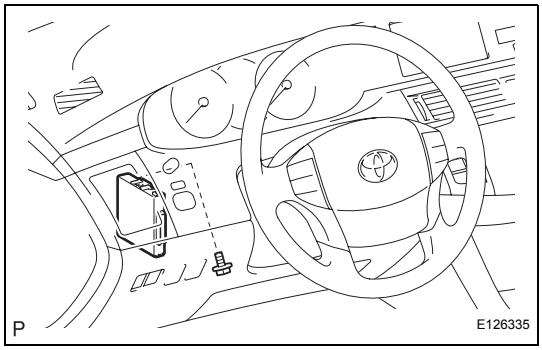

INSTALLATION

1. **INSTALL INSTRUMENT PANEL AIR BAG ASSEMBLY LOWER NO.1**
2. **INSTALL INSTRUMENT PANEL FINISH LOWER PANEL LH**

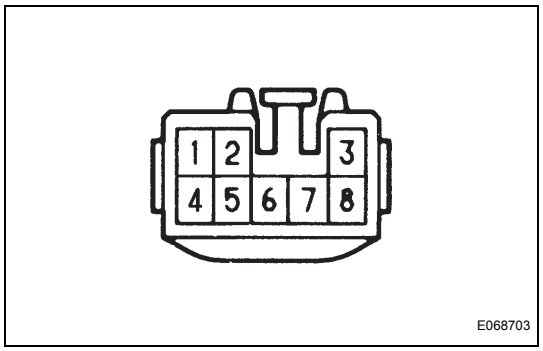

TURN SIGNAL FLASHER ASSEMBLY

ON-VEHICLE INSPECTION

1. INSPECT TURN SIGNAL FLASHER ASSEMBLY

(a) Disconnect the connector from the turn signal flasher.

(b) Measure the voltage according to the value(s) in the table below.

Standard voltage

Tester connection	Condition	Specified condition
1 - body ground	Turn ignition switch on (IG)	10 to 14 V
1 - body ground	Turn ignition switch off	Below 1 V
4 - body ground	Always	10 to 14 V
7 - body ground	Always	Below 1 V

(c) Connect the connector to turn on the signal flasher and turn the ignition switch on (IG). inspect the wire harness side connector from the back according to the conditions listed in the table below.

Standard voltage

Tester connection	Condition	Specified condition
2 - body ground	Hazard switch OFF → ON	0 V → 10 to 14 V (60 to 120 time per minute)
2 - body ground	Turn signal switch (right turn) OFF → ON	0 V → 10 to 14 V (60 to 120 time per minute)
3 - body ground	Hazard switch OFF → ON	0 V → 10 to 14 V (60 to 120 time per minute)
3 - body ground	Turn signal switch (left turn) OFF → ON	0 V → 10 to 14 V (60 to 120 time per minute)
5 - body ground	Turn signal switch (left turn) OFF → ON	10 to 14 V → 0 V
6 - body ground	Turn signal switch (right turn) OFF → ON	10 to 14 V → 0 V
8 - body ground	Hazard switch OFF → ON	10 to 14 V → 0 V

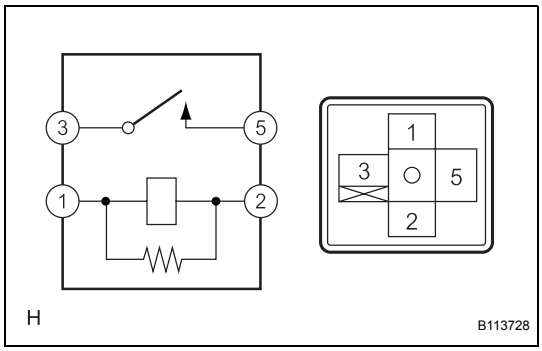

HEADLIGHT RELAY

INSPECTION

1. INSPECT HEADLIGHT RELAY

(a) Measure the resistance according to the value(s) in the table below.

Standard resistance

Tester connection	Specified condition
3 - 5	10 kΩ or higher
3 - 5	Below 1 Ω (When battery voltage is applied to terminal 1 - 2)

LUBRICATION SYSTEM

ON-VEHICLE INSPECTION

1. CHECK ENGINE OIL LEVEL

(a) Warm up the engine, stop it and wait 5 minutes. The oil level should be between the dipstick's low level mark and full level mark.
If low, check for leakage and add oil up to the full level mark.
NOTICE:
Do not fill above the full level mark.

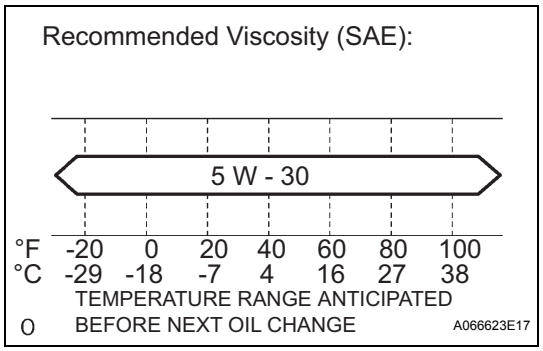

2. CHECK ENGINE OIL QUALITY

(a) Check the oil for deterioration, water contamination, discoloring or thinning.
If the quality is visibly poor, replace the oil.
Oil grade:
ILSAC multigrade engine oil is recommended. SAE 5W-30 is the best choice for good fuel economy and good starting in cold weather.
If SAE 5W-30 in not available, SAE 10W-30 may be used. However, it should be replaced with SAE 5W-30 at the next oil change.

3. REMOVE ENGINE UNDER COVER LH

4. REMOVE ENGINE UNDER COVER RH

5. REMOVE ENGINE OIL PRESSURE SWITCH ASSEMBLY

(a) Disconnect the oil pressure switch connector.
(b) Using a 24 mm deep socket wrench, remove the oil pressure switch.

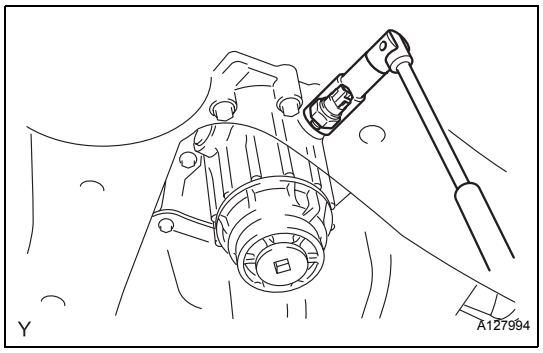

6. INSTALL OIL PRESSURE GAUGE

(a) Install the oil pressure gauge with adapter.

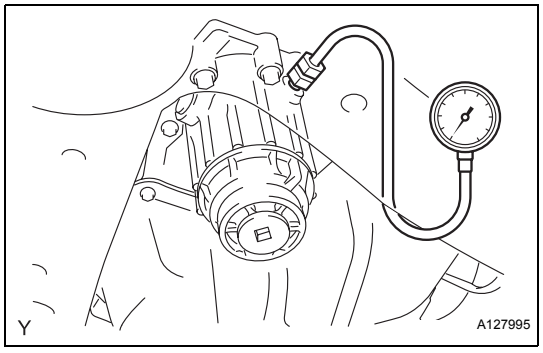

7. WARM UP ENGINE

8. CHECK OIL PRESSURE

Item	Oil Pressure
Idle	80 kPa (0.8 kgf*cm^2, 11.6 psi) or more
6,000 rpm	380 kPa (3.9 kgf*cm^2, 55.5 psi) or more

If the oil pressure is not as specified, check the oil pump (See page LU-14).

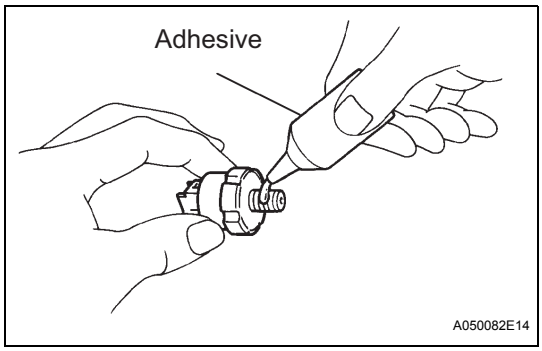

9. INSTALL OIL PRESSURE SWITCH

(a) Remove the oil pressure gauge.

(b) Apply adhesive to 2 or 3 threads of the oil pressure switch.

Adhesive:
Part No. 08833-00080, THREE BOND 1344, LOCTITE 242 or equivalent

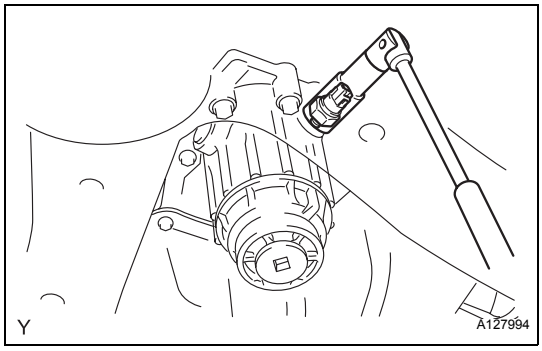

(c) Using a 24 mm deep socket wrench, install the oil pressure switch.

Torque: 15 N*m (153 kgf*cm, 11 ft.*lbf)
NOTICE:
Do not start the engine within 1 hour after installation.

(d) Connect the oil pressure switch connector.

10. CHECK FOR ENGINE OIL LEAKS

11. INSTALL ENGINE UNDER COVER RH

12. INSTALL ENGINE UNDER COVER LH

OIL FILTER

COMPONENTS

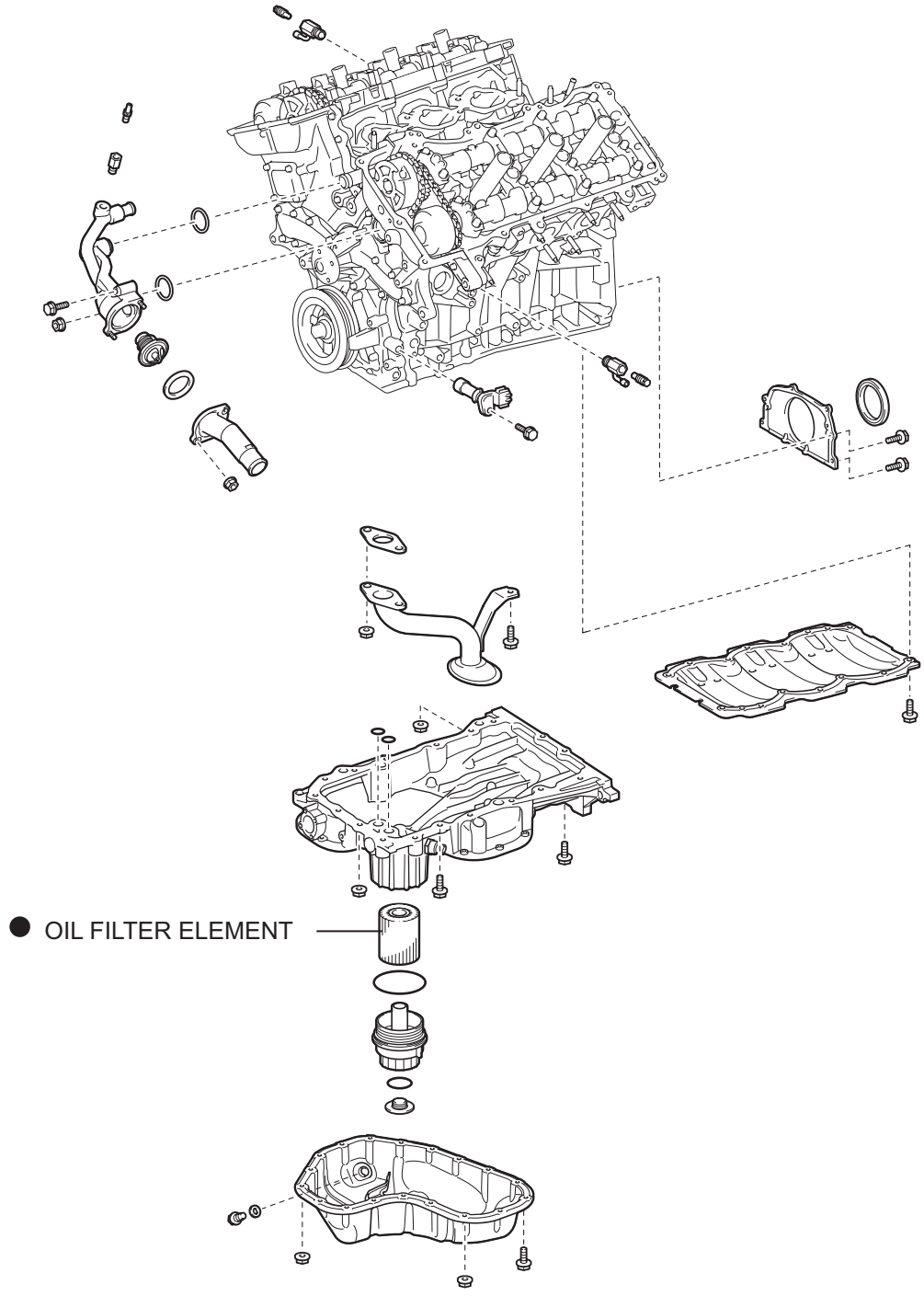

● Non-reusable part

P

A114566E05

REPLACEMENT

CAUTION:

- **Prolonged and repeated contact with engine oil will result in the removal of natural oils from the skin, leading to dryness, irritation and dermatitis. In addition, used engine oil contains potentially harmful contaminants which may cause skin cancer.**
- **Precautions should be taken when replacing engine oil to minimize the risk of your skin making contact with used engine oil. Protective clothing and gloves that cannot be penetrated by oil should be worm. The skin should be washed with soap and water, or use water-less hand cleaner, to remove any used engine oil thoroughly. Do not use gasoline, thinners, or solvents.**
- **In order to preserve the environment, used oil and used oil filters must be disposed of at designated disposal sites.**

1. REMOVE OIL FILTER ELEMENT

(a) Connect the hose (15 mm) to the pipe.

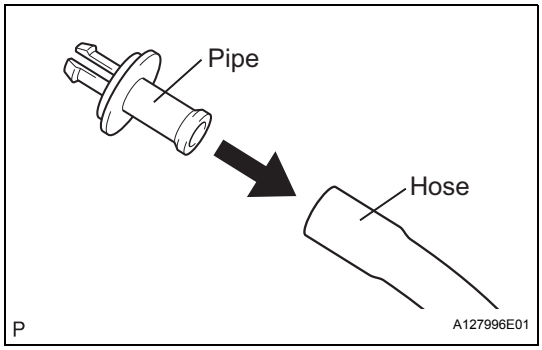

(b) Remove the oil filter drain plug from the oil filter cap.

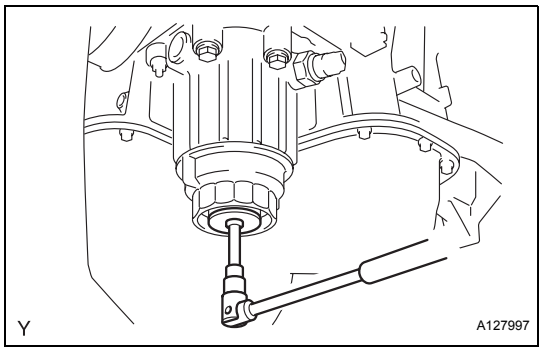

(c) Insert the pipe with the hose into the oil filter cap.
NOTICE:
Be sure to insert the pipe with the O-ring installed on the oil filter cap side.
HINT:
Place the hose end into a container before draining the oil from the hose.

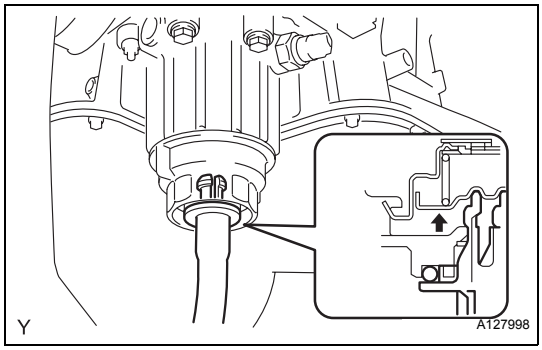

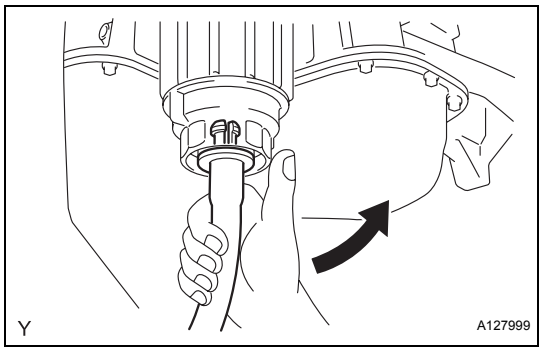

(d) Make sure that oil is completely drained, and remove the pipe and O-ring.
HINT:
Be sure to turn the pipe in the direction of the arrow to remove it.

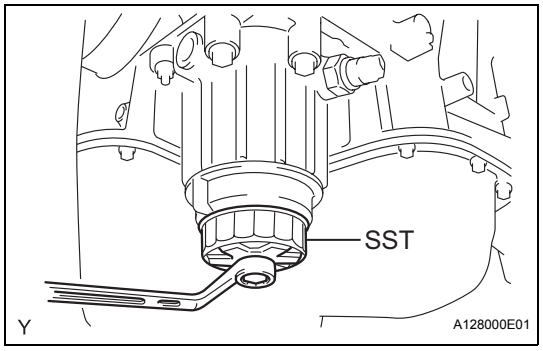

(e) Using SST, remove the oil filter cap.
SST 09228-06501

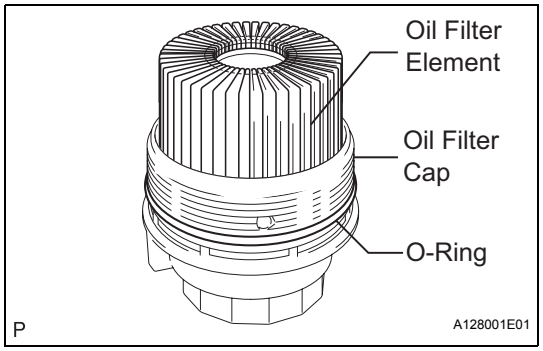

(f) Remove the oil filter element and O-ring from the oil filter cap.
NOTICE:
Do not use any tools to remove the O-ring in order to prevent the cap from being damaged. Be sure to remove it by hand.

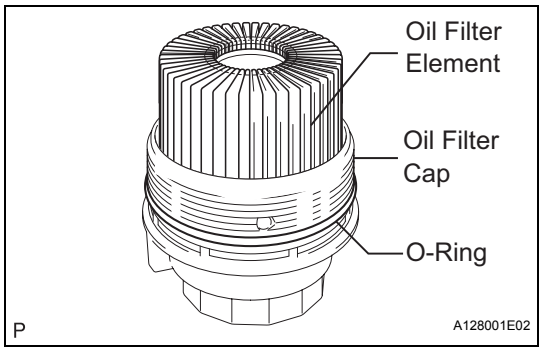

2. INSTALL OIL FILTER ELEMENT

(a) Clean the inside of the oil filter cap, threads, and O-ring groove.

(b) Apply a light coat of engine oil to a new O-ring and install it to the oil filter cap.
NOTICE:
Make sure that the O-ring does not get twisted on the groove.

(c) Install a new oil filter element to the oil filter cap.

(d) Remove all dirt and foreign matter from the installation surface and the inside of the cap on the engine side.

(e) Apply a light coat of engine oil to the O-ring again and install the oil filter cap.
NOTICE:
Make sure that the O-ring does not get caught between the parts.

LU

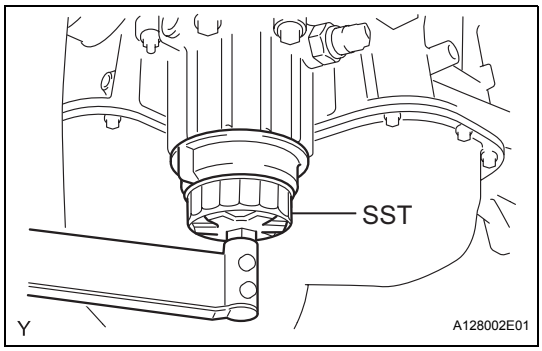

(f) Using SST, install the oil filter cap.
SST 09228-06501
Torque: 25 N*m (255 kgf*cm, 18 ft.*lbf)
NOTICE:
Make sure that there is no clearance between the parts after tightening the oil filter cap.

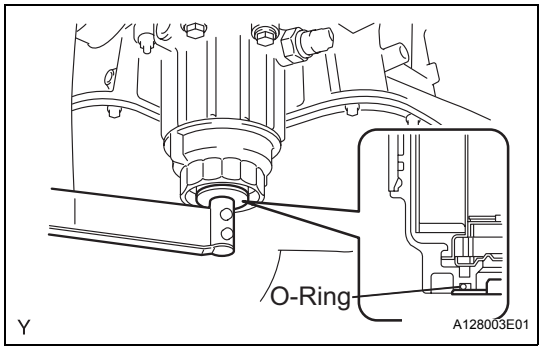

(g) Apply a light coat of engine oil to a new O-ring and install it to the oil filter cap.
NOTICE:
Remove all dirt and foreign matter from the installation surface.

(h) Install the oil filter drain plug to the oil filter cap.
Torque: 13 N*m (127 kgf*cm, 10 ft.*lbf)
NOTICE:
Make sure that the O-ring does not get caught between the parts.

3. ADD ENGINE OIL

4. INSPECT ENGINE OIL LEAKS

(a) Start the engine. Check for oil leaks from the connected parts of the oil filter cap and oil filter drain plug.

OIL PUMP

COMPONENTS

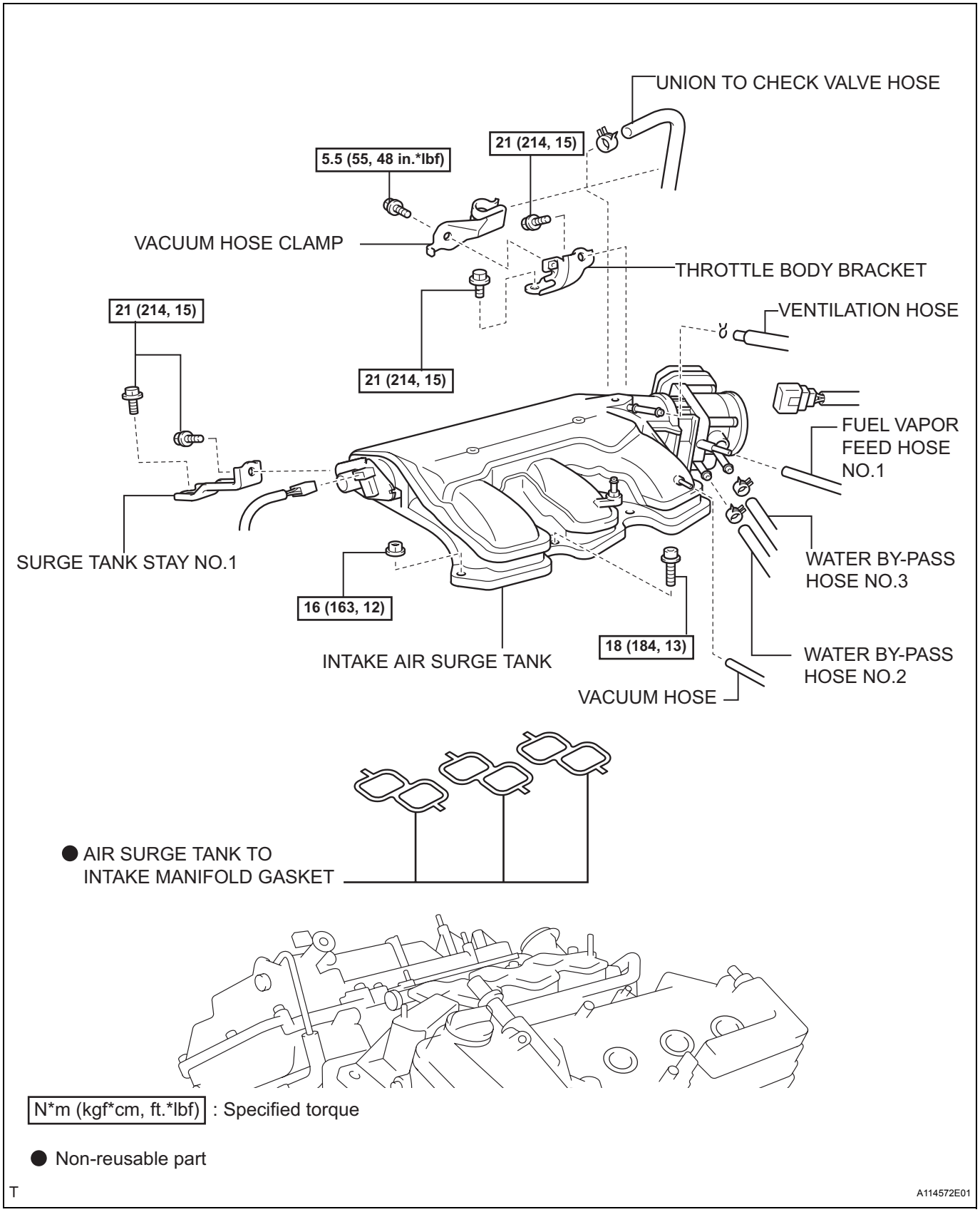

LU

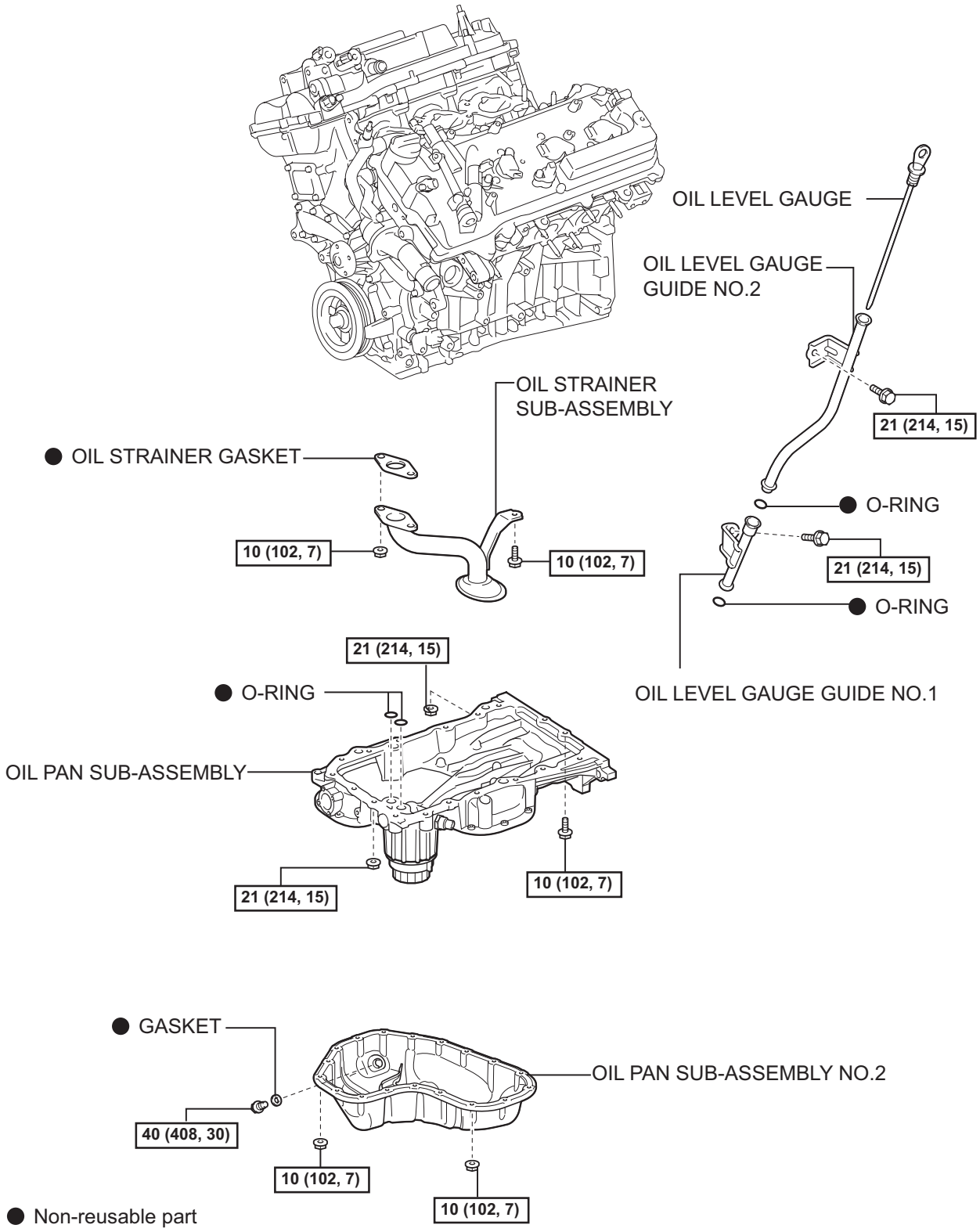

LU

P

A114573E01

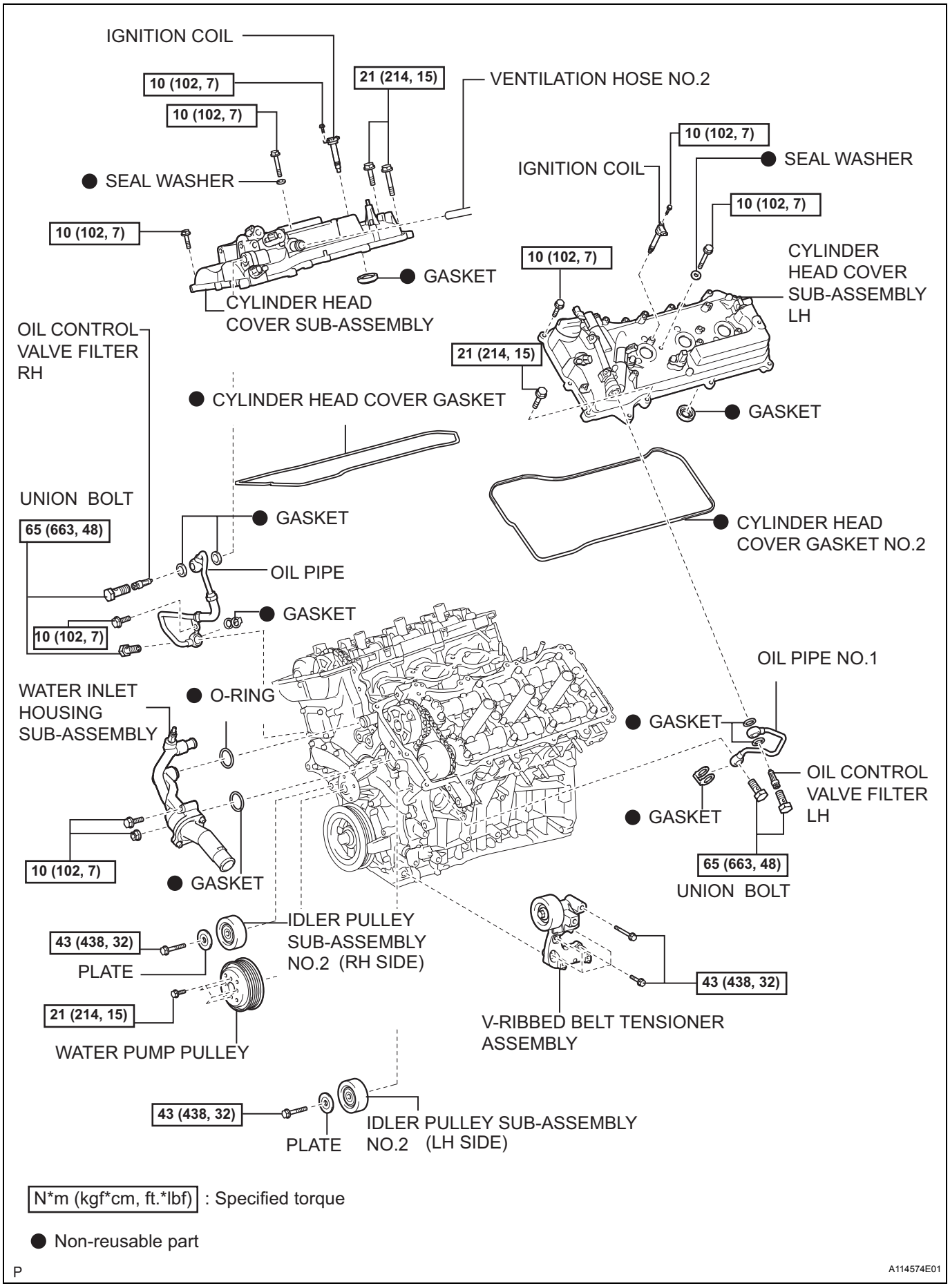

N*m (kgf*cm, ft.*lbf) : Specified torque

● Non-reusable part

P

A114574E01

LU

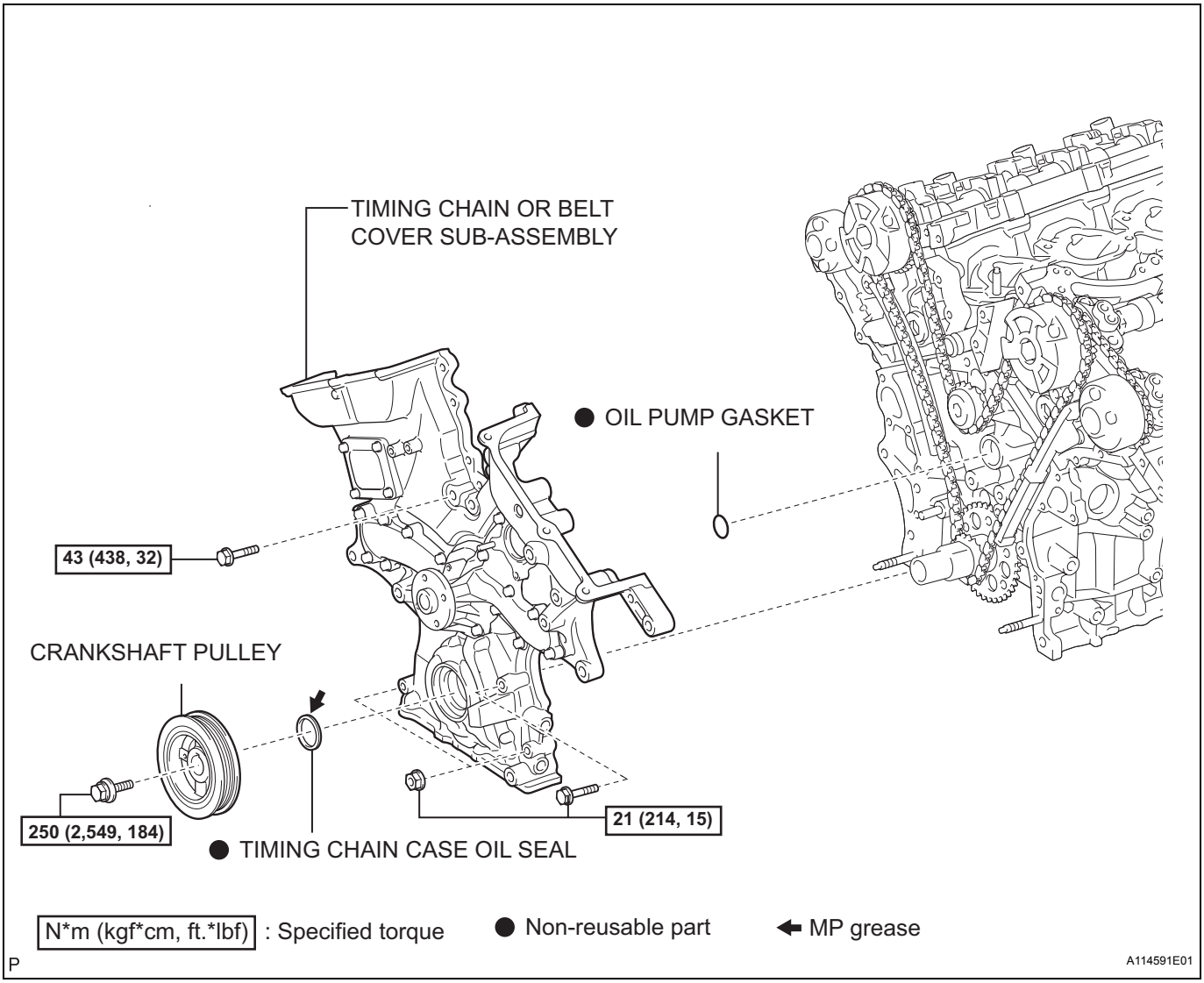
TIMING CHAIN OR BELT
COVER SUB-ASSEMBLY
OIL PUMP GASKET
43 (438, 32)
CRANKSHAFT PULLEY
250 (2,549, 184)
21 (214, 15)
TIMING CHAIN CASE OIL SEAL
N*m (kgf*cm, ft.*lbf) : Specified torque
Non-reusable part
MP grease
P
A114591E01

LU

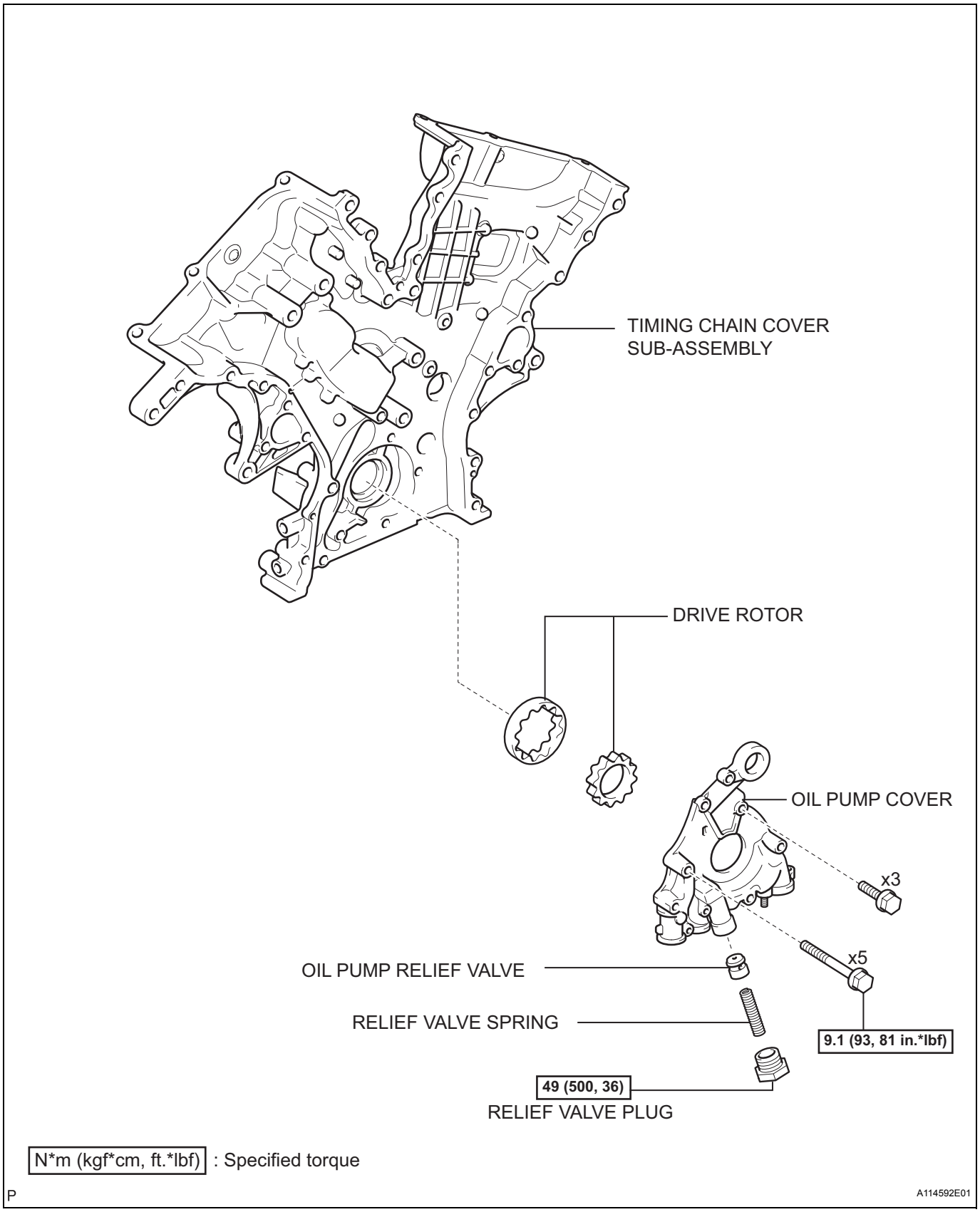
TIMING CHAIN COVER
SUB-ASSEMBLY
DRIVE ROTOR
OIL PUMP COVER
x3
x5
OIL PUMP RELIEF VALVE
RELIEF VALVE SPRING
9.1 (93, 81 in.*lbf)
49 (500, 36)
RELIEF VALVE PLUG
N*m (kgf*cm, ft.*lbf) : Specified torque
P
A114592E01

REMOVAL

1. REMOVE ENGINE ASSEMBLY WITH TRANSAXLE (See page EM-32)
2. REMOVE ENGINE WIRE
3. REMOVE FRONT FRAME ASSEMBLY (See page EM-33)
4. REMOVE STARTER ASSEMBLY (See page ST-72)
5. REMOVE AUTOMATIC TRANSAXLE ASSEMBLY
6. REMOVE OIL LEVEL GAUGE GUIDE SUB-ASSEMBLY (See page EM-34)
7. REMOVE EXHAUST MANIFOLD SUB-ASSEMBLY RH (See page EM-34)
8. REMOVE EXHAUST MANIFOLD SUB-ASSEMBLY LH (See page EM-35)
9. REMOVE DRIVE PLATE & RING GEAR SUB-ASSEMBLY (See page EM-16)
10. FIX ENGINE ASSEMBLY
11. REMOVE IDLER PULLEY SUB-ASSEMBLY NO.2 (See page EM-36)
12. REMOVE V-RIBBED BELT TENSIONER ASSEMBLY (See page EM-7)
13. REMOVE WATER PUMP PULLEY (See page CO-17)
14. REMOVE WATER INLET HOUSING (See page CO-16)
15. REMOVE CRANKSHAFT PULLEY (See page EM-59)
16. REMOVE OIL PAN SUB-ASSEMBLY NO.2 (See page EM-61)
17. REMOVE OIL STRAINER SUB-ASSEMBLY (See page EM-61)
18. REMOVE OIL PAN SUB-ASSEMBLY (See page EM-62)
19. REMOVE INTAKE AIR SURGE TANK ASSEMBLY (See page FU-12)
20. REMOVE IGNITION COIL ASSEMBLY (See page EM-34)
21. REMOVE OIL PIPE NO.1 (See page EM-57)
22. REMOVE OIL PIPE NO.2 (See page EM-57)
23. REMOVE CYLINDER HEAD COVER SUB-ASSEMBLY RH (See page EM-61)
24. REMOVE CYLINDER HEAD COVER SUB-ASSEMBLY LH (See page EM-61)

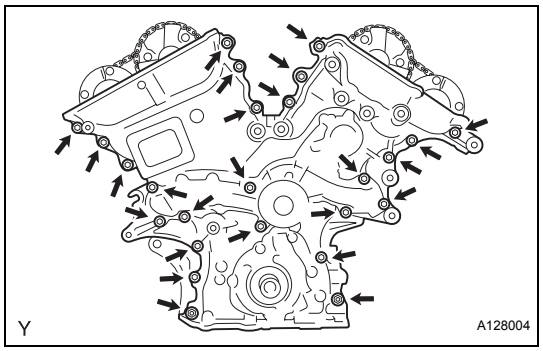

25. REMOVE TIMING CHAIN OR BELT COVER SUB-ASSEMBLY

(a) Remove the 23 bolts and 2 nuts as shown in the illustration.

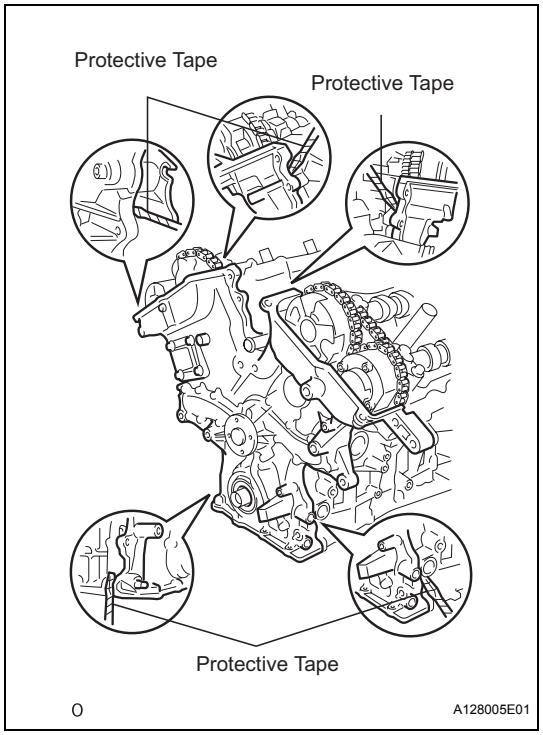

(b) Remove the timing chain cover by prying between the timing chain cover and cylinder head or cylinder block with a screwdriver.

NOTICE:

Be careful not to damage the contact surfaces of the cylinder head, cylinder block and chain cover.

HINT:

Tape the screwdriver tip before use.

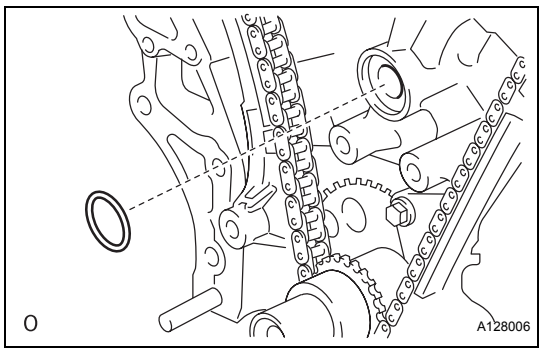

(c) Remove the gasket.

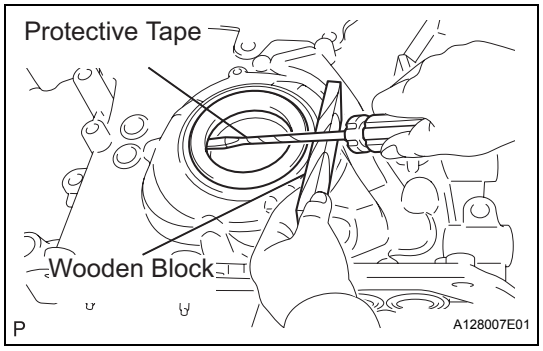

26. REMOVE TIMING GEAR CASE OR TIMING CHAIN CASE OIL SEAL

(a) Using a screwdriver, pry out the oil seal.

HINT:

Tape the screwdriver tip before use.

LU

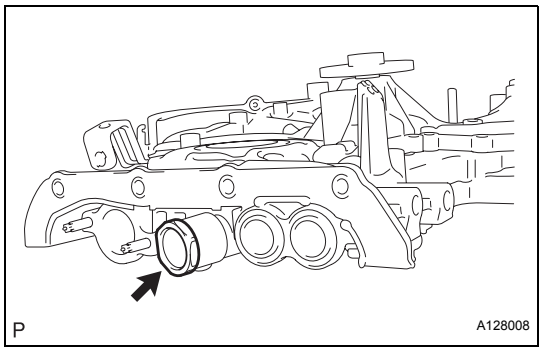

DISASSEMBLY

1. REMOVE OIL PUMP RELIEF VALVE

(a) Using a 27 mm socket wrench, remove the relief valve plug.

(b) Remove the valve spring and oil pump relief valve.

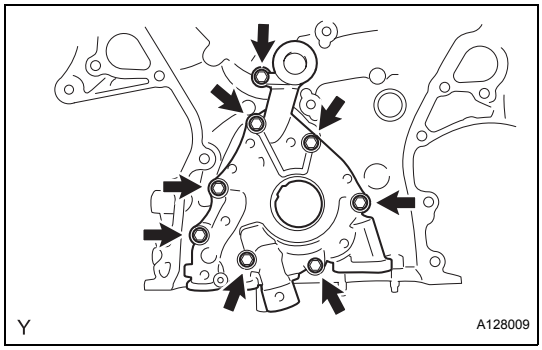

2. REMOVE OIL PUMP COVER

(a) Remove the 8 bolts, oil pump cover, drive rotor and driven rotor.

INSPECTION

1. INSPECT OIL PUMP RELIEF VALVE

(a) Coat the relief valve with engine oil and check that it falls smoothly into the valve hole under its own weight.

If it does not, replace the relief valve. If necessary, replace the oil pump assembly.

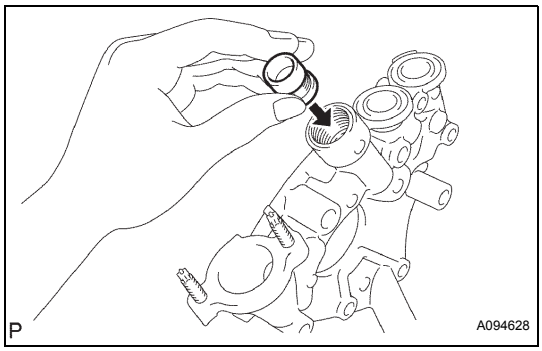

2. INSPECT OIL PUMP ROTOR SET

(a) Install the rotors to the timing chain cover with the rotors' marks facing outward. Check that the rotors revolve smoothly.

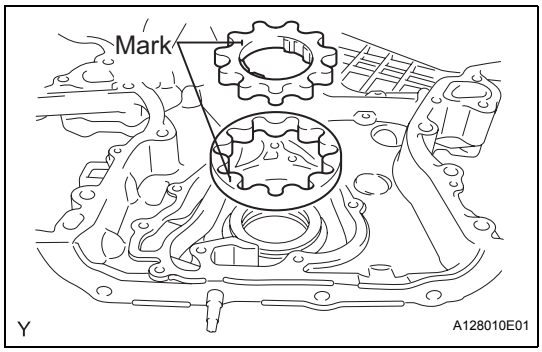

(b) Check the tip clearance.

(1) Using a feeler gauge, measure the clearance between the drive and driven rotor tips, as shown in the illustration.

Tip clearance

Standard	Maximum
0.060 to 0.160 mm (0.0024 to 0.0063 in.)	0.16 mm (0.0063 in.)

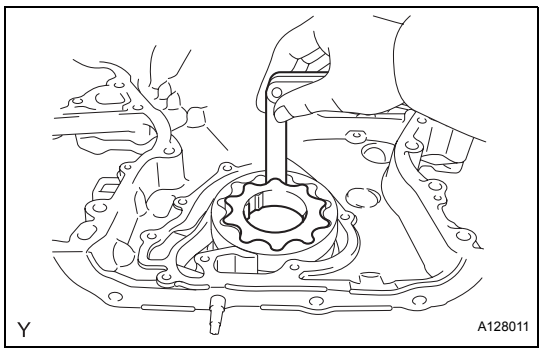

If the tip clearance is greater than the maximum, replace the drive and driven rotors.

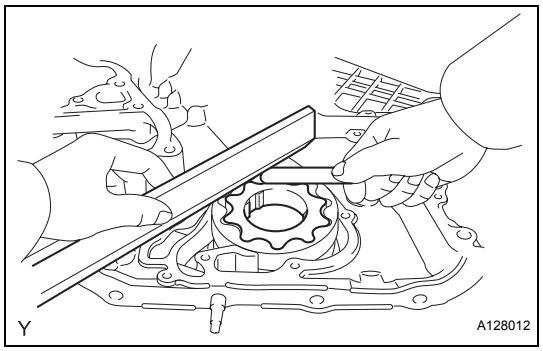

(c) Check the side clearance.
(1) Using a feeler gauge and precision straight edge, measure the clearance between the rotors and precision straight edge, as shown in the illustration.
Side clearance

Standard	Maximum
0.030 to 0.090 mm (0.0012 to 0.0035 in.)	0.090 mm (0.0035 in.)

If the side clearance is greater than the maximum, replace the timing chain cover.

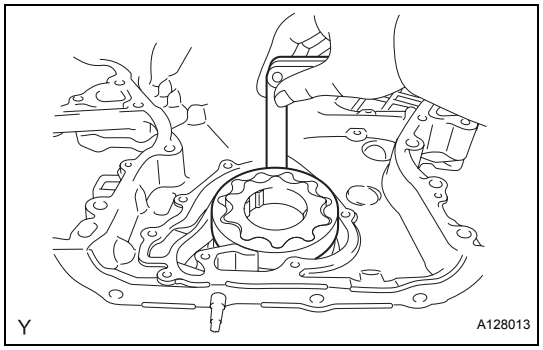

(d) Check the body clearance.
(1) Using a feeler gauge, measure the clearance between the timing chain cover and driven rotor, as shown in the illustration.
Body clearance

Standard	Maximum
0.250 to 0.325 mm (0.0098 to 0.0128 in.)	0.325 mm (0.0128 in.)

If the body clearance is greater than the maximum, replace the timing chain cover.

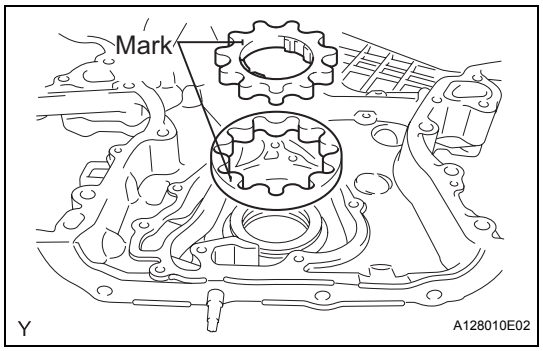

REASSEMBLY

1. INSTALL OIL PUMP COVER

(a) Coat the drive and driven rotors with engine oil and place them into the timing chain cover with the marks facing outward (oil pump cover side). Check that the rotors revolve smoothly.

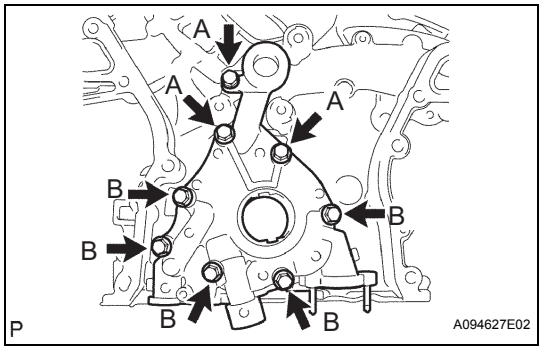

(b) Install the oil pump cover with the 8 bolts.
Torque: 9.1 N*m (93 kgf*cm, 81 in.*lbf)
HINT:
Bolt length:
– 22 mm (0.87 in.) for bolt A
– 40 mm (1.58 in.) for bolt B

LU

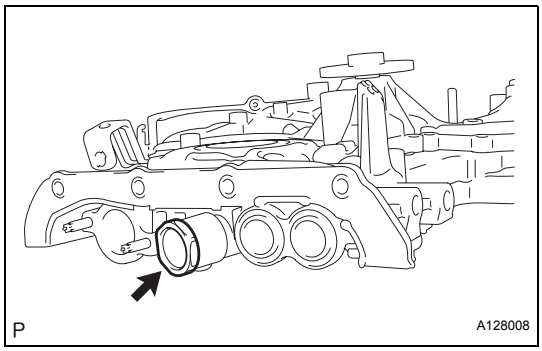

2. INSTALL OIL PUMP RELIEF VALVE

(a) Coat the oil pump relief valve with engine oil.

(b) Insert the relief valve and relief valve spring into the oil pump cover hole.

(c) Using a 27 mm socket wrench, install the plug.
Torque: 49 N*m (500 kgf*cm, 36 ft.*lbf)

INSTALLATION

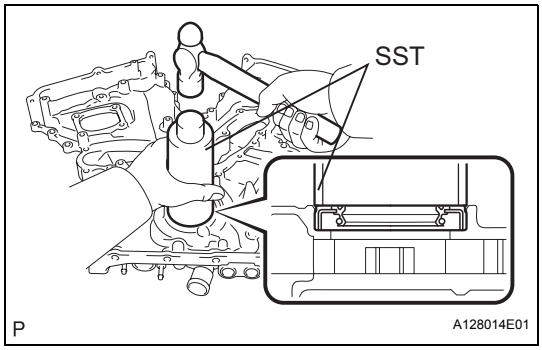

1. INSTALL TIMING GEAR CASE OR TIMING CHAIN CASE OIL SEAL

(a) Using SST, tap in a new oil seal until its surface is flush with the timing chain case edge.
SST 09316-60011 (09316-00011)
NOTICE:
- **Keep the lip free from foreign matter.**
- **Do not tap on the oil seal at an angle.**
- **Make sure that the oil seal edge does not stick out of the timing chain case.**

(b) Apply MP grease to the oil seal lip.

2. INSTALL TIMING CHAIN OR BELT COVER SUB-ASSEMBLY

(a) Apply seal packing in a continuous bead to the engine until as shown in the following illustration.

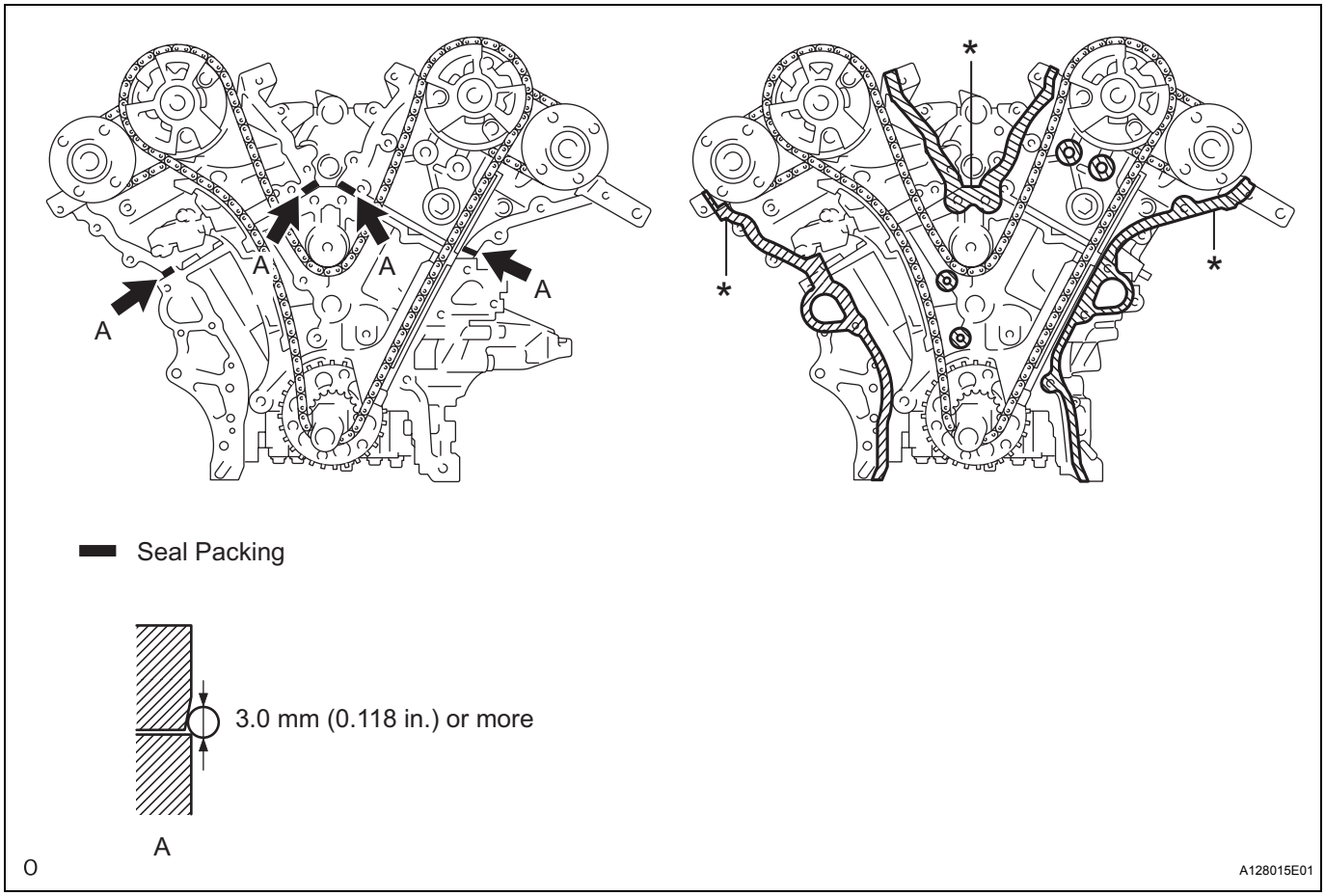

Seal packing:
Part No. 08826-00080 or equivalent
Seal width:
3.0 mm (0.118 in.) or more
NOTICE:

- **Be sure to clean and degrease the contact surfaces, especially the areas indicated by * in the illustration.**
- **When the contact surfaces are wet, wipe off with an oil-free cloth before applying seal packing.**
- **Install the timing chain cover within 3 minutes and tighten the bolts within 15 minutes after applying seal packing.**
- **Do not start the engine for at least 2 hours after installation.**

(b) Apply seal packing in a continuous bead to the timing chain cover as shown in the following illustration.

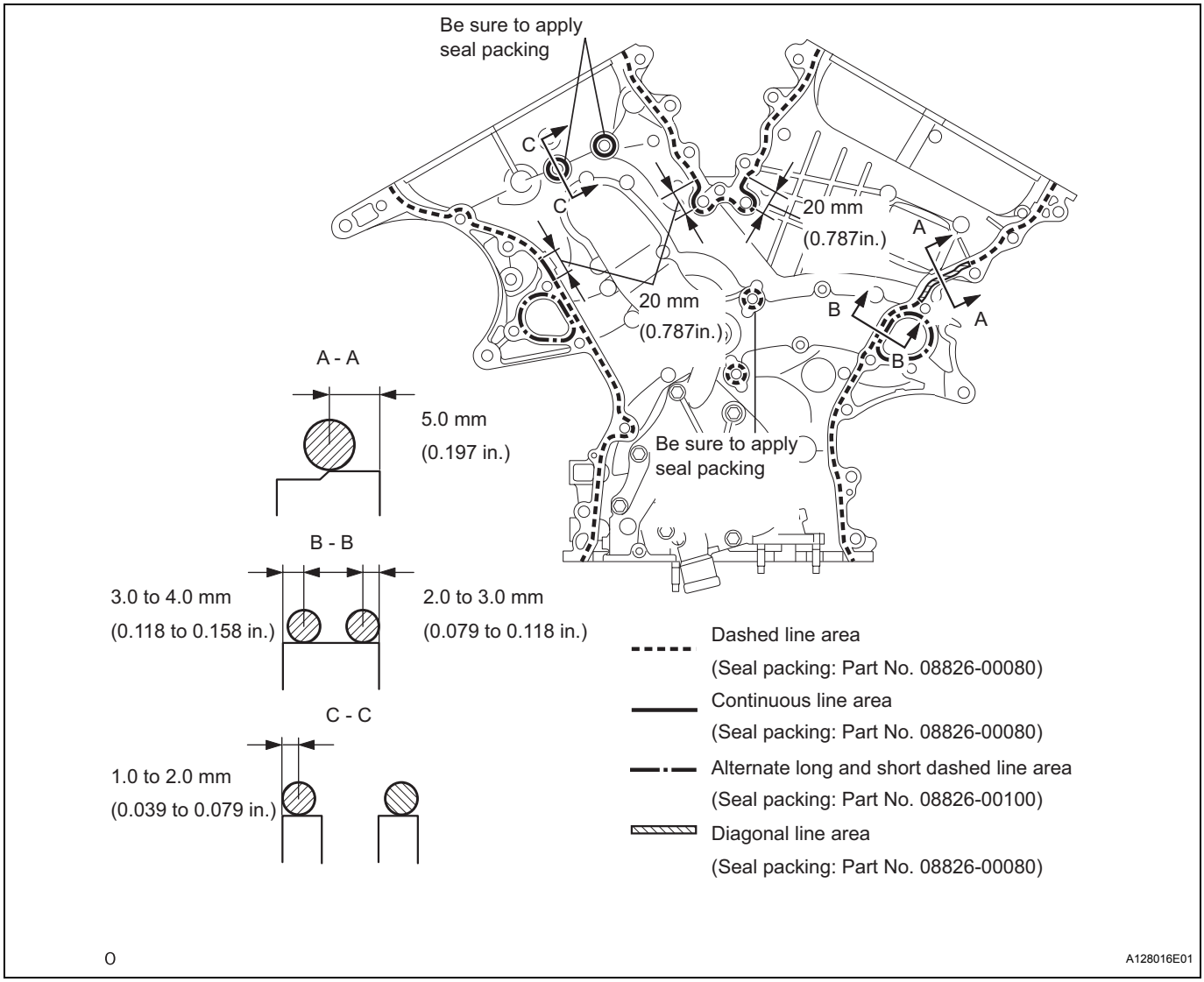

Seal packing:
Part No. 08826-00080 or equivalent
Seal packing:
Part No. 08826-00100 or equivalent
NOTICE:

- **When the contact surfaces are wet, wipe off with an oil-free cloth before applying seal packing.**
- **Install the timing chain cover within 3 minutes and tighten the bolts within 15 minutes after applying seal packing.**
- **Do not start the engine for at least 2 hours after installation.**

HINT:
Apply seal packing referring to the table and illustration below.

	Seal packing diameter	Application position from inside seal line
Dashed line area	3.5 mm (0.138 in.) or more	3.0 to 4.0 mm (0.118 to 0.158 in.)

	Seal packing diameter	Application position from inside seal line
Continuous line area	4.5 mm (0.177 in.) or more	3.0 to 4.0 mm (0.118 to 0.158 in.)
Alternate long and short dashed line area	3.5 mm (0.138 in.) or more	2.0 to 3.0 mm (0.079 to 0.118 in.)
Diagonal line area	6.0 mm (0.236 in.) or more	5.0 mm (0.197 in.)

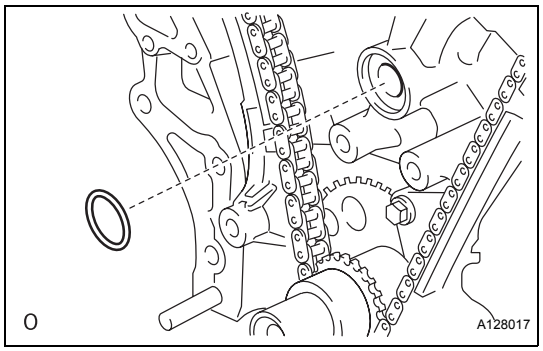

(c) Install a new gasket.

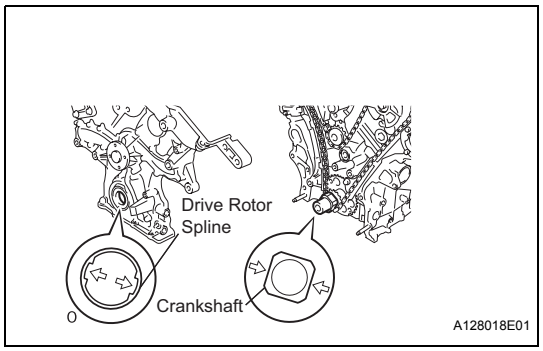

(d) Align the oil pump's drive rotor spline and the crankshaft as shown in the illustration. Install the spline and chain cover to the crankshaft.

(e) Loosely install the timing chain cover with the 23 bolts and 2 nuts, but do not tighten the bolts and nuts yet.

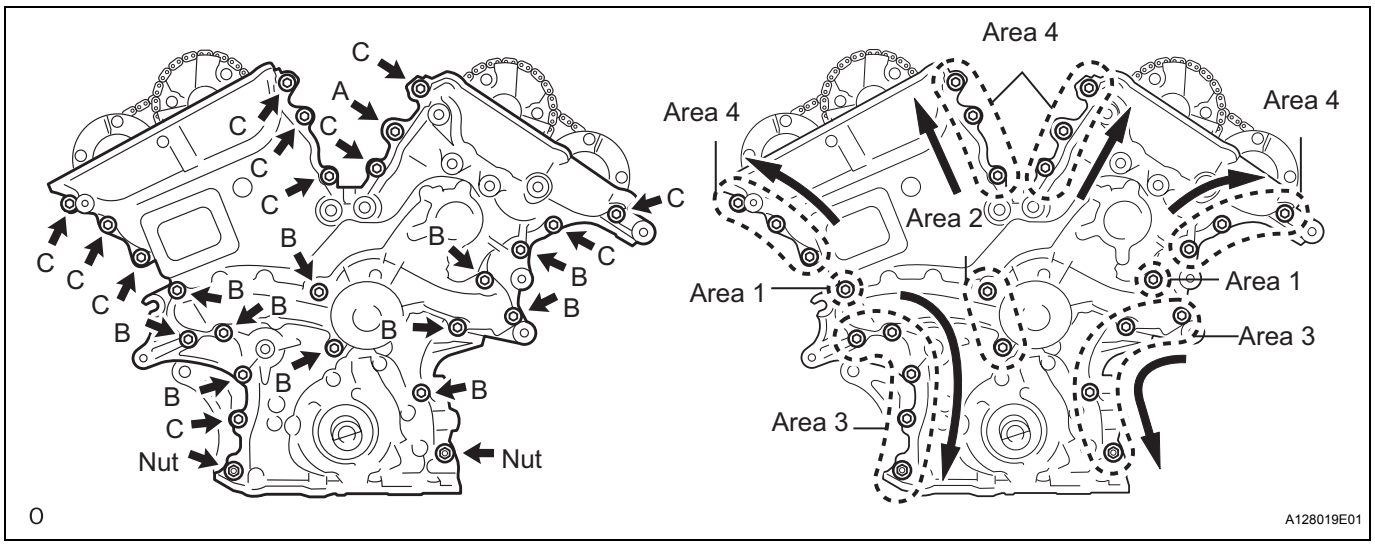

NOTICE:
Make sure that there is no oil on the bolt threads.

HINT:

Bolt length:

– 40 mm (1.57 in.) for bolt A
– 55 mm (2.17 in.) for bolt B
– 25 mm (0.98 in.) for bolt C

(f) Fully tighten the bolts in this order: Areas 1 and Area 2.

Torque: 21 N*m (214 kgf*cm, 15 ft.*lbf)

(g) Fully tighten the bolts and nuts in this order: Areas 3.
Torque: 21 N*m (214 kgf*cm, 15 ft.*lbf)

(h) Fully tighten the bolts in this order: Areas 4.
Torque: Bolt A
43 N*m (438 kgf*cm, 32 ft.*lbf)
Bolts except A
21 N*m (214 kgf*cm, 15 ft.*lbf)

3. **INSTALL CYLINDER HEAD COVER SUB-ASSEMBLY LH (See page EM-144)**
4. **INSTALL CYLINDER HEAD COVER SUB-ASSEMBLY RH (See page EM-143)**
5. **INSTALL OIL PIPE NO.2 (See page EM-147)**
6. **INSTALL OIL PIPE NO.1 (See page EM-146)**
7. **INSTALL IGNITION COIL ASSEMBLY (See page EM-40)**
8. **INSTALL INTAKE AIR SURGE TANK ASSEMBLY (See page FU-17)**
9. **INSTALL OIL PAN SUB-ASSEMBLY (See page EM-140)**
10. **INSTALL OIL STRAINER SUB-ASSEMBLY (See page EM-142)**
11. **INSTALL OIL PAN SUB-ASSEMBLY NO.2 (See page EM-142)**
12. **INSTALL CRANKSHAFT PULLEY (See page EM-145)**
13. **INSTALL WATER INLET HOUSING (See page CO-19)**
14. **INSTALL WATER PUMP PULLEY (See page CO-19)**
15. **INSTALL V-RIBBED BELT TENSIONER ASSEMBLY (See page EM-8)**
16. **INSTALL IDLER PULLEY SUB-ASSEMBLY NO.2 (See page EM-38)**
17. **REMOVE AUTOMATIC TRANSAXLE ASSEMBLY (See page AX-158)**
18. **INSTALL DRIVE PLATE & RING GEAR SUB-ASSEMBLY (See page EM-40)**
19. **INSTALL EXHAUST MANIFOLD SUB-ASSEMBLY LH (See page EM-39)**
20. **INSTALL EXHAUST MANIFOLD SUB-ASSEMBLY RH (See page EM-40)**
21. **INSTALL OIL LEVEL GAUGE GUIDE SUB-ASSEMBLY (See page EM-39)**
22. **INSTALL AUTOMATIC TRANSAXLE ASSEMBLY (See page AX-160)**
23. **INSTALL STARTER ASSEMBLY (See page ST-79)**

24. **INSTALL FRONT FRAME ASSEMBLY (See page EM-40)**
25. **INSTALL ENGINE WIRE**
26. **INSTALL ENGINE ASSEMBLY WITH TRANSAXLE (See page EM-41)**

OUTSIDE VEHICLE

GENERAL MAINTENANCE

Performing these maintenance checks on the vehicle is the owner's responsibility. The owner may perform the maintenance or take the vehicle to a service center.
Check the parts of the vehicle described below on a daily basis. In most cases, special tools are not required. It is recommended that the owner performs these checks.
The procedures for general maintenance are as follows.

1. GENERAL NOTES

- Maintenance requirements very depending on the country.
- Check the maintenance schedule in the owner's manual supplement.
- Following the maintenance schedule is mandatory.
- Determine the appropriate time to service the vehicle using either miles driven or months elapsed, whichever reaches the specification first.
- Maintain similar intervals between periodic maintenance unless otherwise noted.
- Failing to check each vehicle part could lead to poor engine performance and increase exhaust emissions.

2. TIRES

(a) Check the tire pressure with a gauge. Make adjustments if necessary.
(b) Check the surfaces of tires for cuts, damage or excessive wear.

3. WHEEL NUTS

(a) Check for nuts that are loose or missing. Tighten them if necessary.

4. TIRE ROTATION

(a) Check the maintenance schedule in the owner's manual supplement (See page TW-3).

5. WINDSHIELD WIPER BLADES

(a) Check the blades for wear or cracks whenever they are unable to wipe the windshield clean. Replace them if necessary.

6. FLUID LEAKS

(a) Check under the vehicle for leaking fuel, oil water and other fluids.
(b) If you smell gasoline fumes or notice any leaks, locate the cause and correct it.

7. DOORS AND ENGINE HOOD

(a) Check that all of the doors and the tailgate operate smoothly and that all the latches lock securely.
(b) When the primary latch is released, check that the engine hood secondary latch prevents the hood from opening.

INSIDE VEHICLE

GENERAL MAINTENANCE

Performing these maintenance checks on the vehicle is the owner's responsibility. The owner may perform the maintenance or take the vehicle to a service center.
Check the parts of the vehicle described below on a daily basis. In most cases, special tools are not required. It is recommended that the owner performs these checks.
In most cases, special tools are not required.
The procedures for general maintenance are as follows.

1. GENERAL NOTES

- Maintenance requirements very depending on the country.
- Check the maintenance schedule in the owner's manual supplement.
- Following the maintenance schedule is mandatory.
- Determine the appropriate time to service the vehicle using either miles driven or months elapsed, whichever reaches the specification first.
- Maintain similar intervals between periodic maintenance unless otherwise noted.
- Failing to check each vehicle part could lead to poor engine performance and increase exhaust emissions.

2. LIGHTS

(a) Check that the headlights, stop lamps, taillights, turn signal lights, and other lights illuminate or blink properly. Also, check if they have enough brightness.
(b) Check that the headlights are aimed properly.

3. WARNING LIGHTS AND BUZZERS

(a) Check that all the warning lights and buzzers are working.

4. HORNS

(a) Check that the horn is working.

5. WINDSHIELD GLASS

(a) Check for scratches, pits or abrasions.

6. WINDSHIELD WIPER AND WASHER

(a) Check that the wind washers are aimed properly. Also, check that the washer fluid hits the center of the operating rage of each wiper on the windshield.
(b) Check that the wipers streak or not.

7. WINDSHIELD DEFROSTER

(a) When the heater or air conditioner is on the defroster setting, check that air comes out of the defroster outlet.

8. REAR VIEW MIRROR

(a) Check that the rear view mirror is securely mounted.

9. SUN VISORS

(a) Check that the sun visors move freely and are securely mounted.

10. STEERING WHEEL

(a) Check that the steering wheel has the proper freeplay. Also check for steering difficulty, freeplay in the steering wheel and unusual noises.

11. SEATS

(a) Check that the seat adjusters, seatback recliner and other front seat controls operate smoothly.
(b) Check that all the latches lock securely in all positions.
(c) Check that the locks hold securely in all latched positions.
(d) Check that the head restraints move up and down smoothly and that the locks hold securely in all latched positions.
(e) When the rear seatbacks are folded down, check that the latches lock securely.

12. SEAT BELTS

(a) Check that the seat belt system such as the buckles, retractors and anchors operate properly and smoothly.
(b) Check that the belt webbing is not cut, frayed, worn or damaged. Replace if necessary.

13. ACCELERATOR PEDAL

(a) Check the pedal for smooth operation, uneven pedal effort and catching.

14. BRAKE PEDAL

(a) Check the pedal for smooth operation.
(b) Check that the pedal has the proper reserve distance and freeplay (See page BR-10).
(c) Start the engine and check the brake booster function.

15. BRAKES

(a) In a safe place, check that the vehicle remains straight when applying the brakes.

16. PARKING BRAKE

(a) Check that the lever has the proper range of motion (See page PB-1).
(b) On a low incline, check that the parking brake alone can stabilize the vehicle.

17. AUTOMATIC TRANSAXLE "PARK" MECHANISM

(a) Check the lock release button of the shift lever for proper and smooth operation.
(b) When the shift lever is in the P position and all brakes are released on a low incline. Check that the vehicle is stabilized.

UNDER HOOD

GENERAL MAINTENANCE

1. GENERAL NOTES

- Maintenance requirements very depending on the country.
- Check the maintenance schedule in the owner's manual supplement.
- Following the maintenance schedule is mandatory.
- Determine the appropriate time to service the vehicle using either miles driven or time elapsed, whichever reaches the specification first.
- Maintain similar intervals between periodic maintenance.
- Failing to check each vehicle part could lead to poor engine performance and increase exhaust emissions.

2. WINDSHIELD WASHER FLUID

(a) Check that there is sufficient fluid in the tank.

3. ENGINE COOLANT LEVEL

(a) Check that the coolant level is between the "FULL" and "LOW" lines on the see-through reservoir.

4. RADIATOR AND HOSES

(a) Check that the front of the radiator is clean and not blocked by leaves, dirt and bugs.

(b) Check the hoses for cracks, kinks, rot or loose connections.

5. BATTERY ELECTROLYTE LEVEL

(a) Check that the electrolyte level of all the battery cells is between the upper and lower lines on the case.

6. BRAKE FLUID LEVEL

(a) Check that the brake fluid levels are near the upper level line on the see-through reservoirs.

7. ENGINE DRIVE BELT

(a) Check the drive belt for fraying, cracks, wear and oiliness.

8. ENGINE OIL LEVEL

(a) Check the level on the dipstick with the engine turned off.

9. POWER STEERING FLUID LEVEL

(a) Check the level on the dipstick.

(b) The level should be in the "HOT" or "COLD" range depending on the fluid temperature.

10. AUTOMATIC TRANSMISSION FLUID LEVEL

(a) Check the Automatic Transmission fluid (See page AX-120).

11. EXHAUST SYSTEM

(a) Check for unusual exhaust sounds or abnormal exhaust fumes. Locate the cause and correct it.

ENGINE

GENERAL MAINTENANCE

HINT:
Inspect these items on a cooled down engine.

1. REPLACE TIMING CHAIN
(a) Replace the timing chain (See page EM-106).

2. INSPECT DRIVE BELT
(a) Inspect the drive belt (See page EM-7).

3. INSPECT SPARK PLUGS
(a) Inspect spark plug (See page IG-6).

4. INSPECT AIR FILTER
(a) Remove the air filter.
(b) Visually check that the air filter is not excessively damaged or oily.
If necessary, replace the air filter.
(c) Reinstall the air filter.

5. REPLACE AIR FILTER
(a) Replace the air filter with a new one.

6. REPLACE ENGINE OIL AND OIL FILTER
(a) Replace the engine oil and oil filter (See page LU-1).

7. REPLACE ENGINE COOLANT
(a) Replace the engine coolant (See page CO-7).

8. INSPECT FUEL TANK CAP GASKET
(a) Inspect the fuel tank cap gasket (See page EC-7).

9. INSPECT FUEL LINES AND CONNECTIONS AND FUEL TANK VAPOR VENT SYSTEM HOSES AND FUEL TANK BANDS
(a) Visually check the fuel lines for cracks, leakage, loose connections, deformation or tank band looseness.

10. INSPECT EXHAUST PIPES AND MOUNTINGS
(a) Visually check the pipes, hangers and connections for severe corrosion, leaks or damage.

BRAKE

GENERAL MAINTENANCE

1. INSPECT BRAKE LINE PIPES AND HOSES

HINT:
Work in a well-lighted area. Turn the front wheels fully to the right or left before beginning.

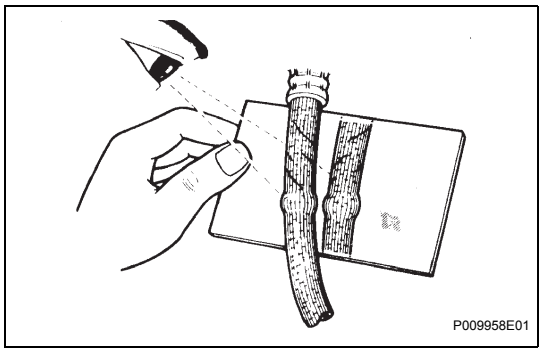

(a) Using a mirror, check the entire circumference and length of brake lines and hoses for:
- Damage
- Wear
- Deformation
- Cracks
- Corrosion
- Leaks
- Bends
- Twists

(b) Check all the clamps for tightness and the connections for leakage.

(c) Check that the hoses and lines are not near sharp edges, moving parts and the exhaust system.

(d) Check that the lines are installed pass through the center of the grommets.

2. INSPECT FRONT BRAKE PADS AND DISCS

(a) Inspect the front brake pads and discs (See page BR-27).

3. INSPECT REAR BRAKE PADS AND DISCS

(a) Inspect the rear brake pads and discs (See page BR-34).

4. INSPECT REAR BRAKE LININGS AND DRUMS

(a) Inspect the rear brake linings and drums (See page PB-18).

5. INSPECT OR CHANGE BRAKE FLUID

(a) Inspect or change the brake fluid (See page BR-3).
Fluid:
SAE J1703 or FMVSS No.116 DOT3

CHASSIS

GENERAL MAINTENANCE

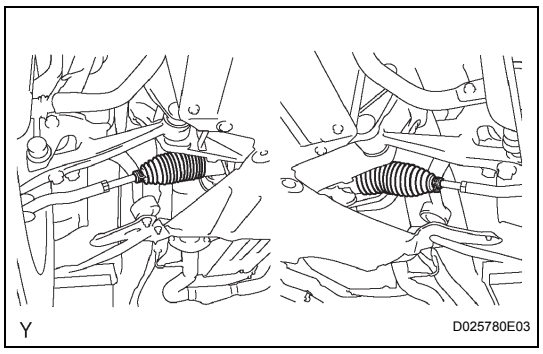

1. INSPECT STEERING LINKAGE

(a) Check the steering wheel freeplay (See page SR-2).

(b) Check the steering linkage for looseness or damage.

(1) Check that the tie rod ends do not have excessive play.

(2) Check that the dust seals and boots are not damaged.

(3) Check that the boot clamps are not loose.

2. INSPECT STEERING GEAR HOUSING OIL

(a) Check the steering gear housing for oil leakage. If oil is leaking, find the cause and repair it.

3. INSPECT BALL JOINT AND DUST COVER

(a) Inspect the ball joints for excessive looseness.

(1) Jack up the front of the vehicle and place wooden blocks with a height of 180 to 200 mm (7.09 to 7.87 in.) under the front tires.

(2) Lower the vehicle until the front coil spring has about half its ordinary load. Place stands under the vehicle for safety.

(3) Check that the front wheels are pointing straight ahead. Use chocks.

(4) Using a lever, pry up the end of the lower arm. Check the amount of play.

Maximum ball joint vertical play:
0 mm (0 in.)

If there is any play, replace the ball joint.

(b) Check the dust cover for damage.

4. INSPECT DRIVE SHAFT BOOTS

(a) Check the drive shaft boots for loose clamps, grease leakage, kink or damage.

5. CHECK TRANSAXLE OIL

(a) Visually check the transaxle for oil (fluid) leakage. If oil is leaking, find the cause and repair it.

6. ROTATE TIRES

(a) Rotate the tires (See page TW-3).

BODY

GENERAL MAINTENANCE

1. TIGHTEN BOLTS AND NUTS ON CHASSIS AND BODY

(a) Where necessary, tighten all the parts of the chassis.
- Front axle and suspension
- Drive train
- Rear axle and suspension
- Brake system
- Engine mounting, etc.

(b) Where necessary, tighten all the parts of the body.
- Seat belt system
- Seat
- Doors and hood
- Body mountings
- Fuel tank
- Exhaust pipe system, etc.

2. REPLACE AIR CONDITIONING FILTER

(a) Remove the glove compartment assembly.
(b) Remove the filter case from the filter outlet.
(c) Remove the filter from the filter case.
(d) Replace the filter with a new one.
(e) Installation is in the reverse order of removal.

3. ROAD TEST

(a) Check the engine and chassis for abnormal noises.
(b) Check that the vehicle does not wander or pull to one side.
(c) Check that the brakes work properly and do not drag.
(d) Do setting of the parking brake shoes and drum.

4. BODY INSPECTION

(a) Check the body exterior for dents, scratches and rust.
(b) Check the underbody for rust and damage.
If necessary, replace or repair.

5. FINAL INSPECTION

(a) Check the operation of the body parts:
(1) Hood:
- Auxiliary catch operates properly
- Hood locks securely when closed

(2) Front and rear doors:
- Door locks operate properly
- Doors close properly

(3) Back door:
- Door lock operates properly

(4) Seats:
- Seat adjusts easily and locks securely in any position
- Front seat back locks securely in any position

- Folding-down rear seatbacks lock securely

(b) Be sure to deliver a clean car. Especially check:
- Steering wheel
- Shift lever knob
- All switch knobs
- Door handles
- Seats

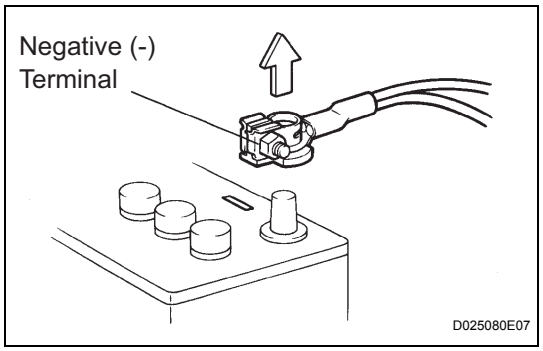

METER / GAUGE SYSTEM

PRECAUTION

1. REMOVAL AND INSTALLATION OF BATTERY TERMINAL

(a) Before performing electronic work, disconnect the battery negative (-) terminal in order to prevent a short in the system.

(b) When disconnecting and reconnecting the battery cable, turn the ignition switch and lighting switches off and loosen the terminal nut completely. Perform these operations without prying on the prying on the terminal.

(c) When the battery terminal is removed, the memories of the clock, radio, DTCs, etc. are erased. So before removing the terminal, check and make a note of them.

NOTICE:

When disconnecting the battery negative (-) terminal, initialize the following system after the terminal is reconnected.

System Name	See Procedure
Front Power Seat Control System	IN-29
Sliding Roof System	

2. EXPRESSIONS OF IGNITION SWITCH

(a) The type of ignition switch used on this model differs according to the specification of the vehicle. The expressions listed in the table below are used in this section.

Switch Type		Ignition Switch (position)	Engine Switch (condition)
Expression	Ignition Switch off	LOCK	Off
	Ignition Switch on (IG)	ON	On (IG)
	Ignition Switch on (ACC)	ACC	On (ACC)
	Engine Start	START	Start

PARTS LOCATION

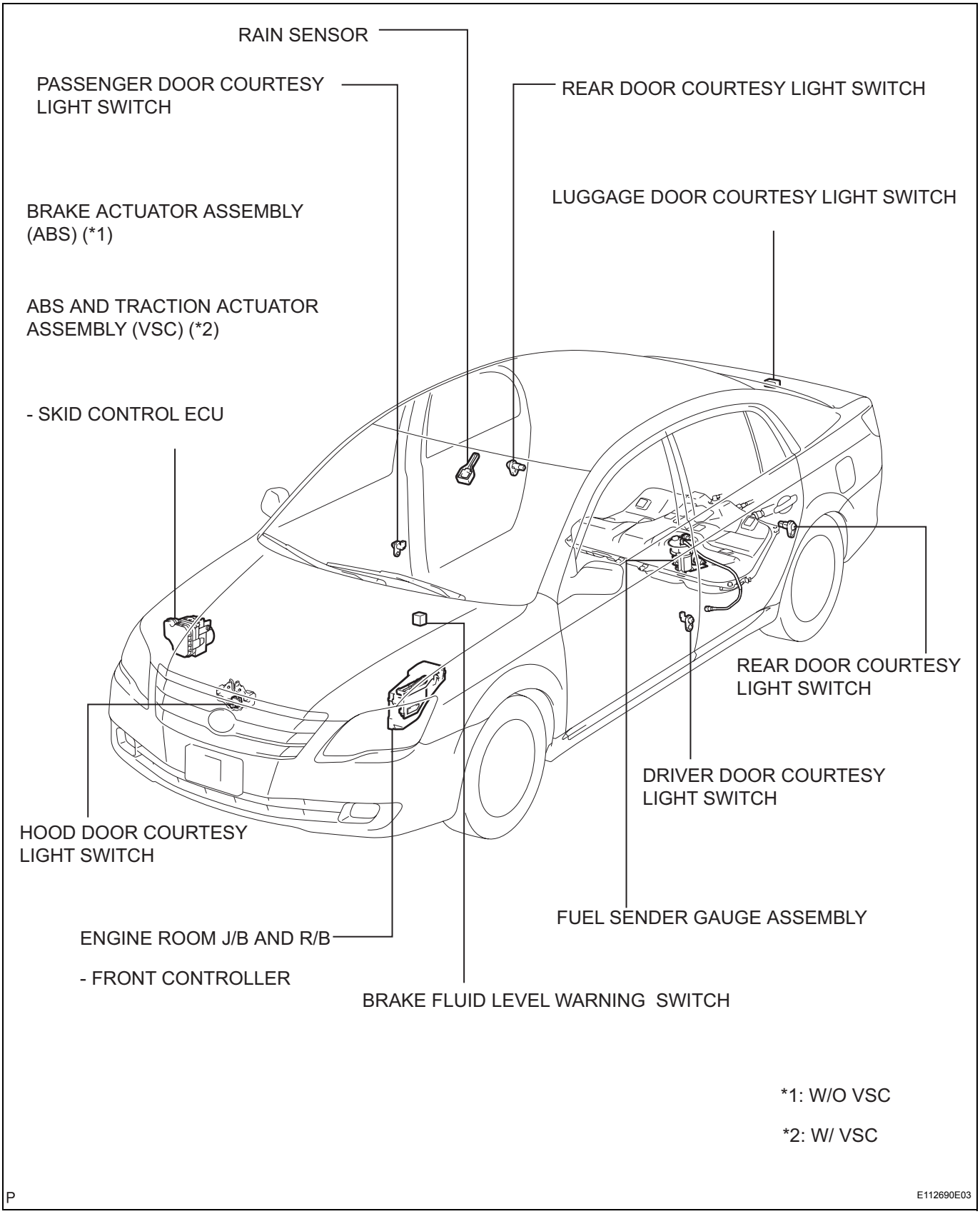

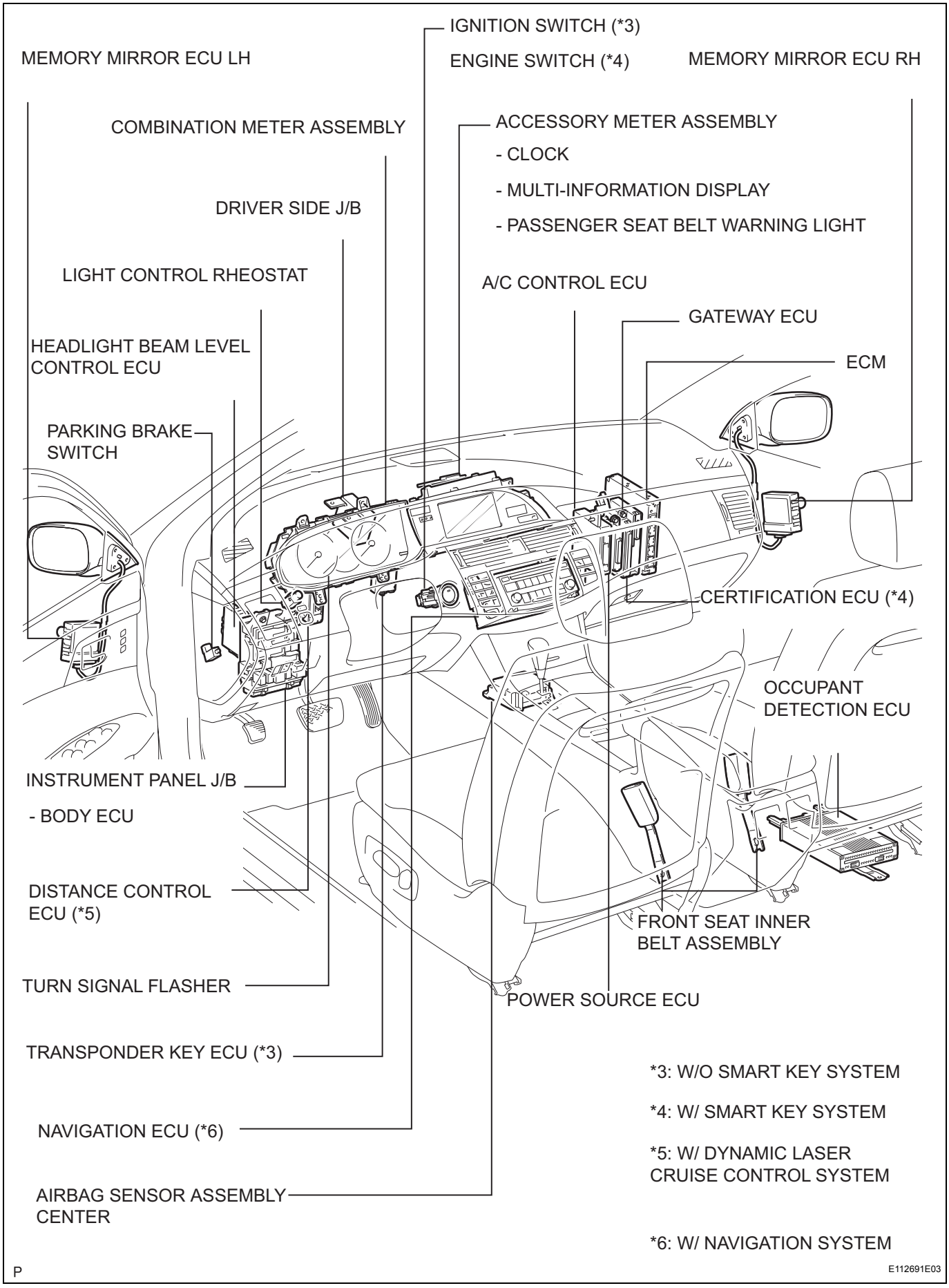
IGNITION SWITCH (*3)
ENGINE SWITCH (*4)
MEMORY MIRROR ECU LH
MEMORY MIRROR ECU RH
COMBINATION METER ASSEMBLY
ACCESSORY METER ASSEMBLY
- CLOCK
- MULTI-INFORMATION DISPLAY
- PASSENGER SEAT BELT WARNING LIGHT
DRIVER SIDE J/B
LIGHT CONTROL RHEOSTAT
A/C CONTROL ECU
GATEWAY ECU
HEADLIGHT BEAM LEVEL CONTROL ECU
ECM
PARKING BRAKE SWITCH
CERTIFICATION ECU (*4)
OCCUPANT DETECTION ECU
INSTRUMENT PANEL J/B
- BODY ECU
DISTANCE CONTROL ECU (*5)
FRONT SEAT INNER BELT ASSEMBLY
TURN SIGNAL FLASHER
POWER SOURCE ECU
TRANSPONDER KEY ECU (*3)
NAVIGATION ECU (*6)
AIRBAG SENSOR ASSEMBLY CENTER
*3: W/O SMART KEY SYSTEM
*4: W/ SMART KEY SYSTEM
*5: W/ DYNAMIC LASER CRUISE CONTROL SYSTEM
*6: W/ NAVIGATION SYSTEM
P
E112691E03

ME

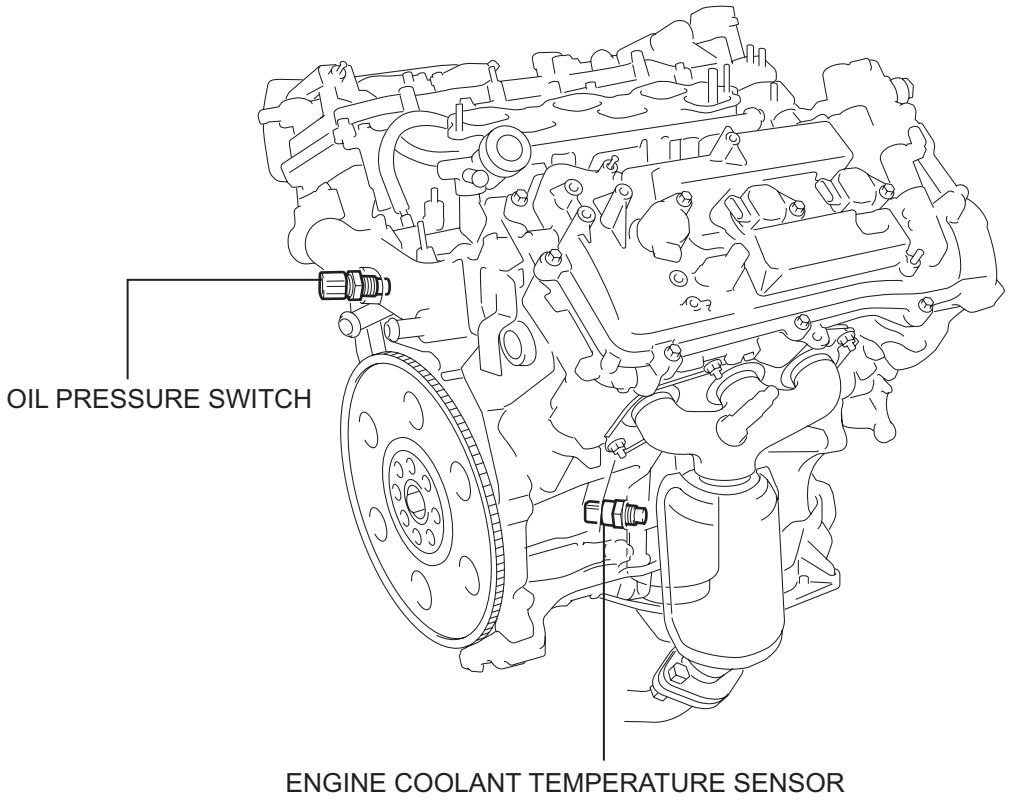

Y

E112692E01

SYSTEM DIAGRAM

1. COMBINATION METER ASSEMBLY

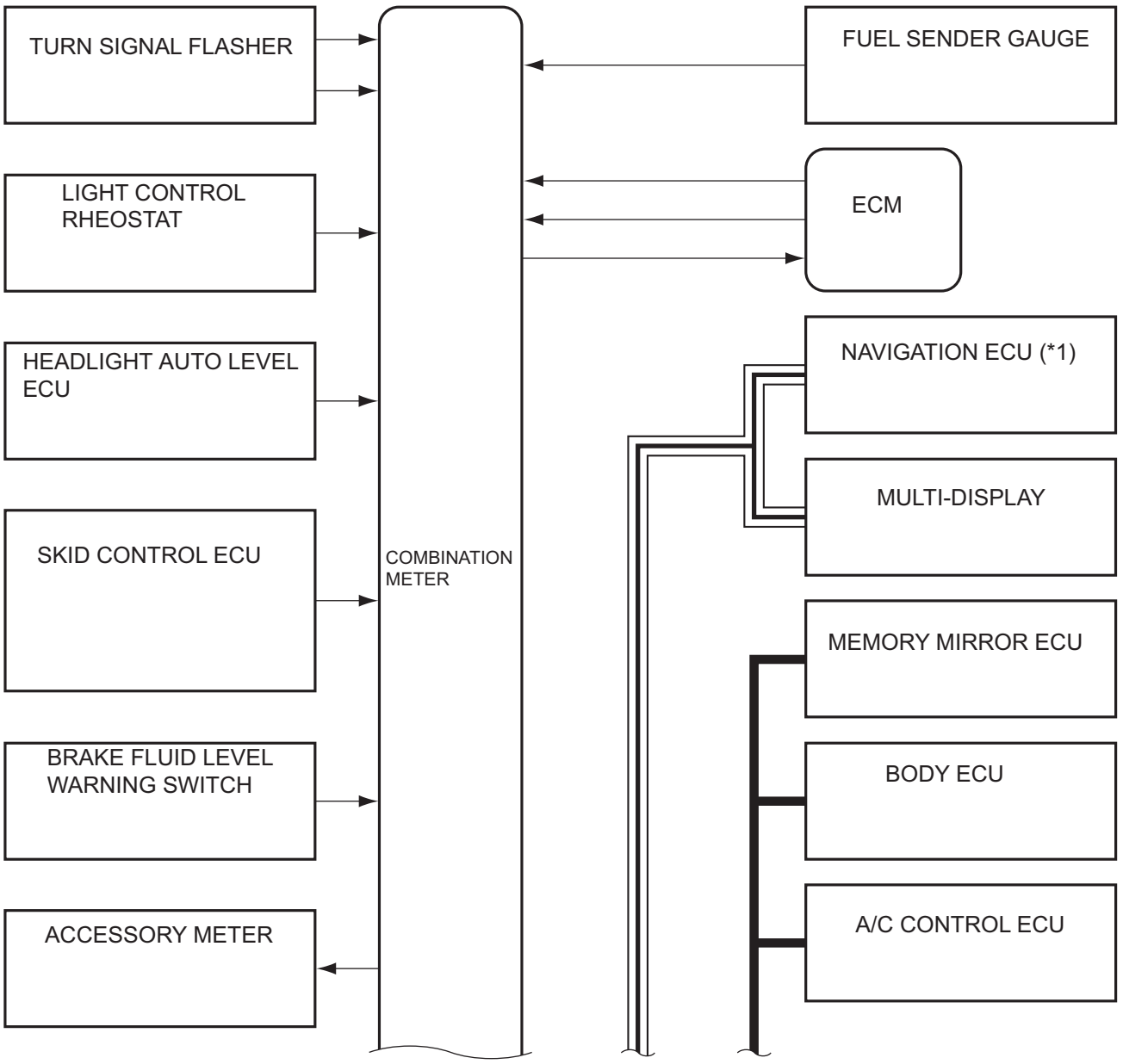

*1: w/ Navigation System

H

E112710E02

ME

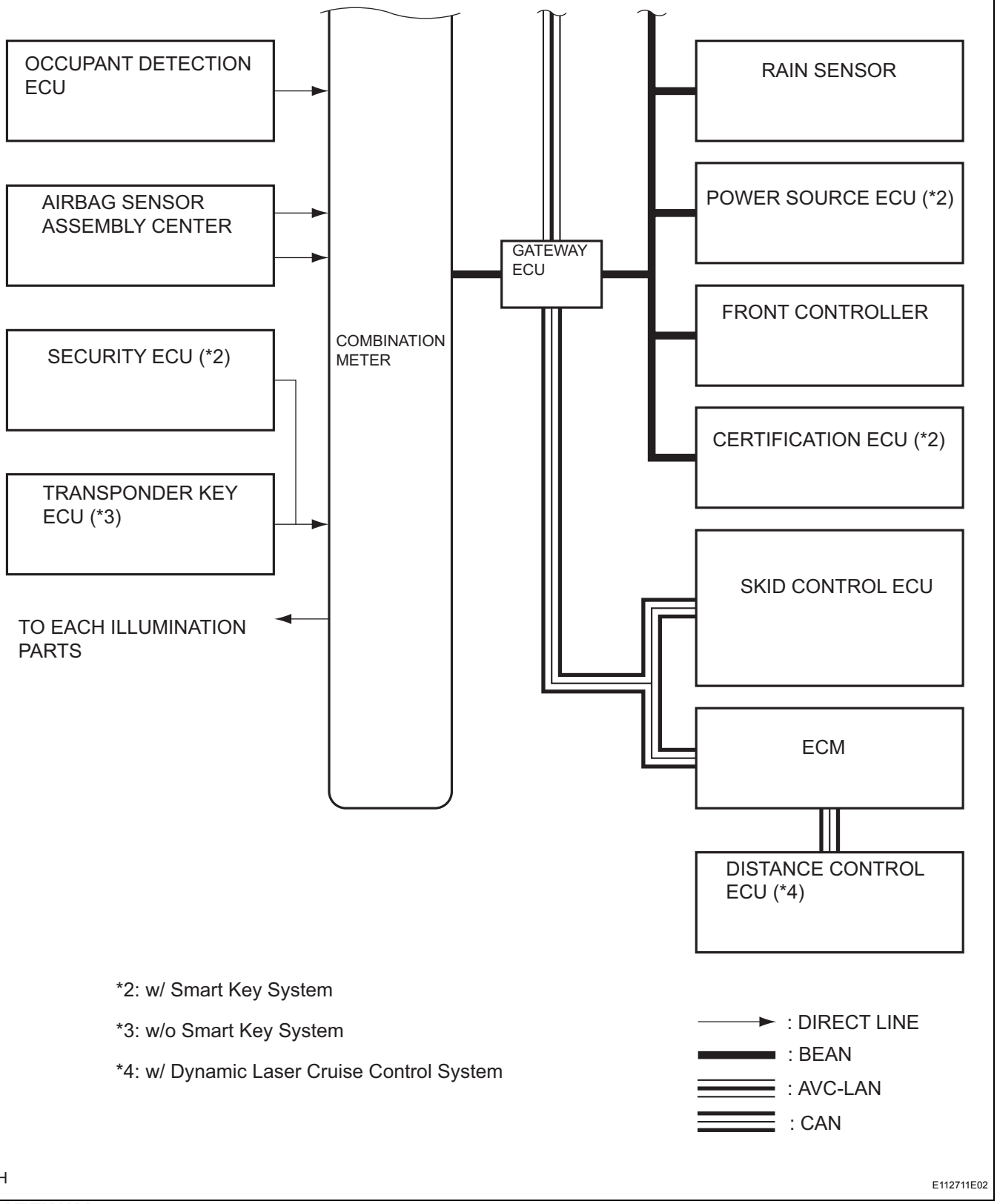

GATEWAY:

Sender	Receiver	Communication Signal	Communication Line
Gateway ECU	Combination meter	• Multiplex communication signal	BEAN

HINT:
CAN signals and AVC-LAN signals are transmitted to or received from the combination meter assembly through the gateway ECU.

CAN:

Sender	Receiver	Communication Signal	Communication Line
Distance Control ECU (*1)	Combination meter	• Laser cruise signal • Diagnosis signal (Cruise Control)	CAN-BEAN
Skid Control ECU	Combination meter	• Brake warning light signal • Parking brake switch signal • ABS warning light signal • VSC warning light signal (*2) • Request signal to turn on / blink SLIP (*2) indicator light • Diagnosis signal (ABS, VSC)	CAN-BEAN
ECM	Combination meter	• ECT indicator signal • Test mode signal • Starter signal • Diagnosis signal (ABS, VSC, Cruise control) • Shift position signal • Engine coolant temperature signal • Fuel injection volume signal (for FUEL gauge control) • Radar cruise signal	CAN-BEAN

BEAN:

Sender	Receiver	Communication Signal	Communication Line
Body ECU	Combination meter	• Rear door courtesy light switch signal • Passenger door courtesy light switch signal • Driver door courtesy light switch signal • Driver side seat belt buckle light switch signal • Diagnosis signal • Illumination signal • Request signal to turn on the headlight / taillight	BEAN
Front Controller	Combination meter	• Engine oil level signal • Engine oil pressure signal • Washer level sensor signal • Alternator L signal	BEAN
A/C Control ECU	Combination meter	• Outside temperature signal	BEAN
Power Source ECU	Combination meter	• The power source signal	BEAN
Certification EUC	Combination meter	• The door condition signal	BEAN
Combination meter	Power Source ECU A/C Control ECU Body ECU Front Controller Rain sensor Certification EUC	• Vehicle speed signal	BEAN
Combination meter	Power Source ECU Body ECU	• Light control rheostat signal	BEAN
Combination meter	A/C Control ECU Memory mirror ECU LH / RH	• Vehicle specification signal	BEAN
Combination meter	Certification EUC Body ECU Gateway ECU	• ODO meter signal	BEAN
Combination meter	Gateway ECU	• Vehicle warning signal	BEAN

ME

AVC-LAN:

Sender	Receiver	Communication Signal	Communication Line
Multi-Display	Combination meter	• Driver monitor operation signal	AVC-LAN-BEAN
Combination meter	Multi-Display	• Driver monitor information signal (possible running distance / average vehicle speed / drive distance / average fuel consumption / travel time)	AVC-LAN-BEAN

Direct Line:

Sender	Receiver	Communication Signal	Communication Line
Headlight Auto Level ECU	Combination meter	• Headlight level warning signal	Direct Line
Airbag Sensor Assembly Center	Combination meter	• Diagnosis code signal • Passenger seat occupant classification signal • Passenger seat buckle switch signal • Request signal to turn on airbag warning light • Request signal to blink airbag warning light	Direct Line
Transponder Key ECU (*3)	Combination meter	• Security indicator light signal	Direct Line
Certification ECU (*4)	Combination meter	• Single buzzer sounding signal • Single to inform if key is in the cabin • Key battery information signal • Single to inform that engine cannot be restarted • A signal to inform if key is on front seats. • Incorrect key signal • Shift position warning signal • Request signal to sound a buzzer • Door open indication signal	Direct Line
Combination meter	Hazard Switch Seat Heater Switch Cigar Lighter A/T Shift Lever Audio Controller Navigation ECU Heater Control Panel	• Illumination control signal	Direct Line

*1: w/ Dynamic Laser Cruise Control System. In addition, the distance control ECU communicates with the combination meter assembly via ECM.
*2: w/ VSC
*3: w/o Smart key System
*4: w/ Smart key System

ME

2. ACCESSORY METER ASSEMBLY

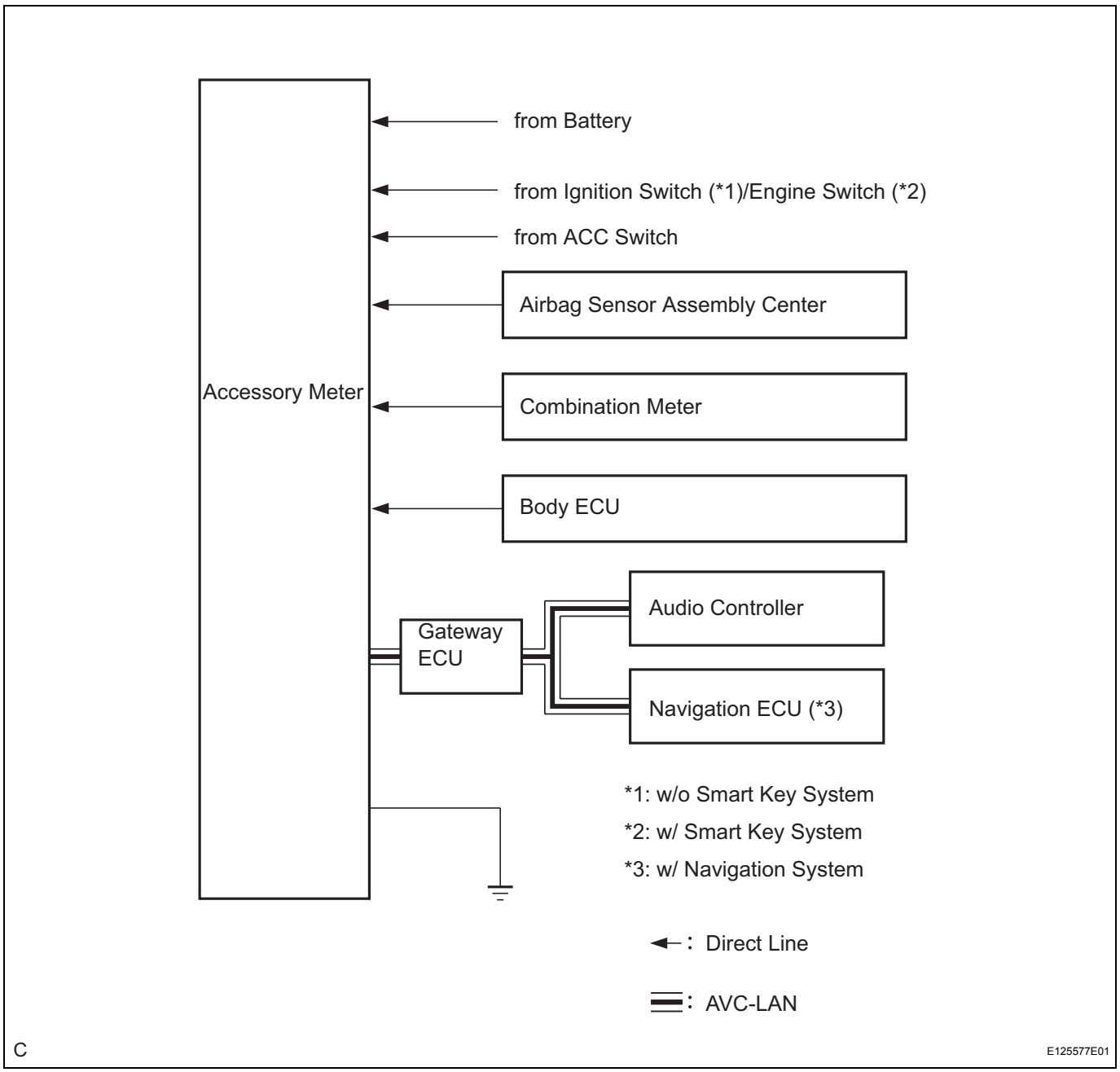

ME

GATEWAY:

Sender	Receiver	Communication Signal	Communication Line
Gateway ECU	Each ECU	• Multiplex communication signal	AVC-LAN

HINT:
AVC-LAN signals are transmitted to or received from the combination meter assembly through the ECU.

AVC-LAN:

Sender	Receiver	Communication Signal	Communication Line
Navigation ECU (*3)	Accessory Meter	• GPS signal	AVC-LAN-BEAN
Audio Controller	Accessory Meter	• Audio display signal	AVC-LAN-BEAN

Direct Line

Sender	Receiver	Communication Signal	Communication Line
Body ECU	Accessory Meter	• Air conditioning display, drive monitor display and warning display	Direct Line
Airbag Sensor Assembly Center	Accessory Meter	• Passenger airbag warning signal	Direct Line
Combination Meter	Accessory Meter	• Passenger seat belt warning signal • Illumination signal	Direct Line
Body ECU	Accessory Meter	• ACAN signal	Direct Line

*1: w/o Smart Key System
*2: w/ Smart Key System
*3: w/ Navigation System

SYSTEM DESCRIPTION

1. Combination Meter Assembly

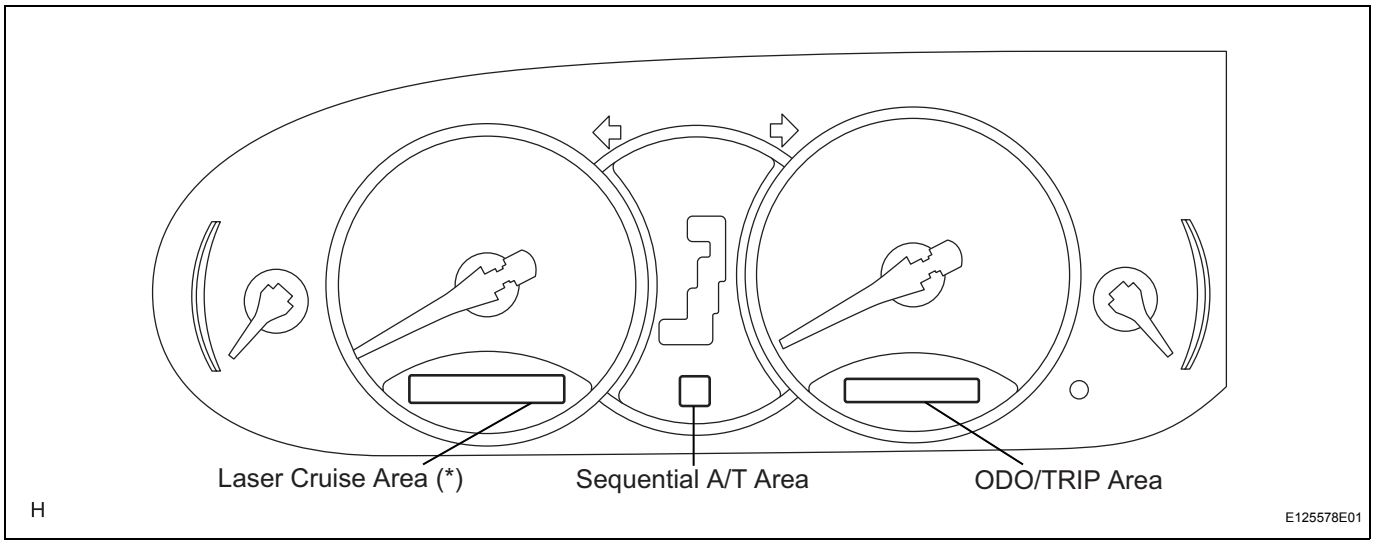

*: w/ Dynamic Laser Cruise Control System

HINT:

CAN signals and AVC-LAN signals are transmitted to or received from the combination meter assembly through the gateway ECU.

(a) GAUGE:

Item	Detail
Speedometer	Based on a signal received from the wheel speed sensor, the ABS and traction actuator assembly (VSC) (*1) brake actuator assembly (ABS) (*2) calculates vehicle speed and transmits the data to the meter (Direct line).
Tachometer	ECM transmits engine speed to the meter display (Direct line).
Engine Coolant Temperature Gauge	Displays the engine coolant temperature receiving a signal from the ECM (CAN-BEAN).
Fuel Gauge	Receives the fuel sender gauge signal from the fuel sender gauge assembly (Direct line).

(b) WARNING/INDICATOR:

Item	Detail
TURN SIGNAL	Receives the turn signal from the turn signal flasher (Direct line).
BEAM	Receives the beam signal from the body ECU (BEAN).
CHARGE	Receives the malfunction charge signal from the front controller (CAN-BEAN).
CHECK E/G	Receives the malfunction signal from the ECM (Direct line).
DOOR	Open door indicator comes on receiving from the body ECU (BEAN).
D BELT	Receives the driver seat belt signal (Unfastened) from the body ECU (BEAN).
P BELT	Receives the passenger seat belt signal (Unfastened) from the airbag sensor ECU (Direct line).
BRAKE	• Receives the parking brake switch or warning signal from the ABS and traction actuator assembly (VSC) (*1) brake actuator assembly (ABS) (*2) (CAN-BEAN). • Receives the brake fluid level warning signal from the brake fluid level warning switch (Direct line).
AIRBAG	Receives the malfunction signal from the airbag sensor assembly center (Direct line).
A/T P	Receives the P signal from the ECM (CAN-BEAN).
A/T R	Receives the R signal from the ECM (CAN-BEAN).
A/T N	Receives the N signal from the ECM (CAN-BEAN).
A/T D	Receives the D signal from the ECM (CAN-BEAN).
A/T S	Receives the S signal from the ECM (CAN-BEAN).

Item	Detail
SLIP	Receives the malfunction signal from the ABS and traction actuator assembly (VSC) (CAN-BEAN) (*1).
VSC	Receives the malfunction signal from the ABS and traction actuator assembly (VSC) (CAN-BEAN) (*1).
WASHER	Receives the washer level warning signal from controller (BEAN).
ABS	Receives the malfunction signal from the ABS and traction actuator assembly (VSC) (*1) / brake actuator assembly (ABS) (*2) (CAN-BEAN).
TAIL (*3)	Receives the malfunction tail (*3) signal from the body ECU (BEAN).
HEAD (*4)	Receives the malfunction head (*4) signal from the body ECU (BEAN).
MAINT REQD (*4)	The combination meter assembly determines the indicator operation based on the accumulated travel distance.
KEY (*6)	Receives the smart key system signal from the certification ECU (BEAN).
Oil pressure	Receives the low engine oil pressure signal from the front controller (BEAN)
Headlight	Receives the headlight auto level signal from the headlight auto level ECU (Direct line).
Security	Receives the security signal from the transponder key ECU (*5) / certification ECU (*6) (Direct line).
Fuel warning	Receives the fuel level warning signal from the fuel sender gauge assembly (Direct line).
CRUISE (*7)	Receives the laser cruise signal from the distance control ECU (CAN-BEAN).
NORM (*7)	Receives the laser cruise normal signal from the distance control ECU (CAN-BEAN).
READY (*7)	Receives the laser cruise ready signal from the distance control ECU (CAN-BEAN).
CRUISE CHECK	Receives the laser cruise warning signal from the distance control ECU (CAN-BEAN).

ME

*1: w/ VSC
*2: w/o VSC
*3: Except U.S.A.
*4: U.S.A.
*5: w/o Smart key System
*6: w/ Smart key System
*7: w/ Dynamic Laser Cruise System

(c) MULTI-INFORMATION DISPLAY

- The multi-information display consists areas (Laser cruise area and ODO / TRIP area). These areas display the contents given in the table below.
- A steering pad switch (for multi-information display) that switches the contents of the multi-information display has been provided on the steering wheel.

Item	Details
Laser cruise area	Displays cruise information. In addition, the contents of the display can be switched by operating the mode change of the cruise control switch.
ODO / TRIP area	Displays ODO / TRIP information. The contents of the display can be switched by operating ODO / TRIP switch.

2. ACCESSORY METER ASSEMBLY

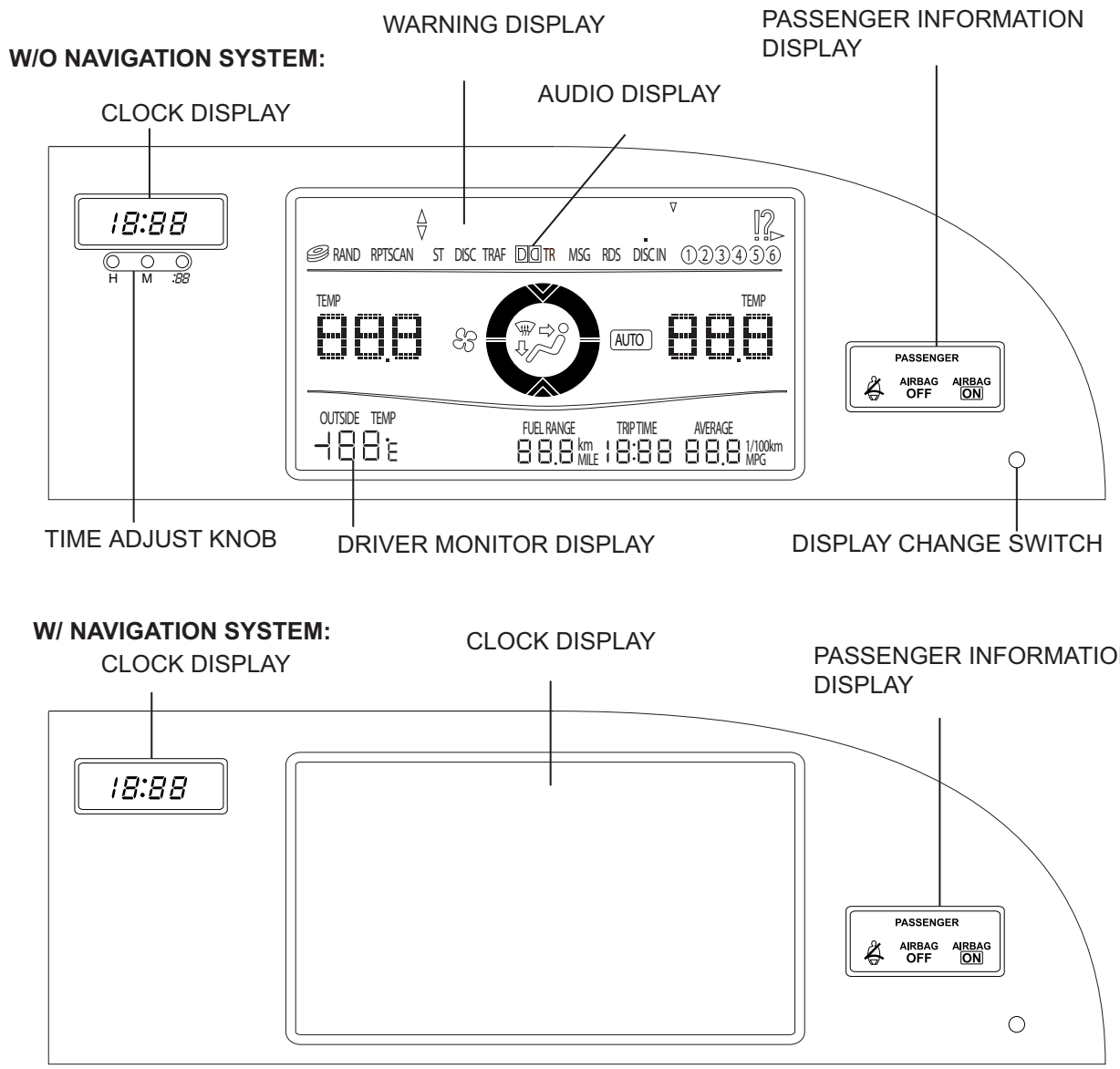

C E112714E02

ME

(a) The accessory meter assembly consists of six displays (clock display, warning display, audio display, A/C display, driver information display, and passenger information display). These areas display the contents given in the table below.

Item	Details
Warning display	Displays the item below. In addition, the contents of the display can be switched by operating the display change switch. • Laser cruise warning • Fuel level warning • Washer fluid level warning • Engine start warning • Engine start and key certification signal • Door open warning • Ice road condition
Driver monitor display	Displays the item below. • Outside temperature (OUTSIDE TEMP) • Possible running distance (FUEL RANGE) • Driving time (TRIP TIME) • Average fuel consumption (AVERAGE)
Clock display	Displays the time and time can be adjusted by time adjusted knob (*1) / automatically (*2).
Passenger information display	Display the condition of the passenger seat belt ON / OFF and passenger seat airbag ON / OFF.
Audio display	Displays the condition of the audio.
A/C display	Displays the condition of the A/C.
Display change switch	Change the display condition (All display is ON→Driver monitor display is OFF→All display is OFF).

*1: w/o Navigation System
*2: w/ Navigation System

HOW TO PROCEED WITH TROUBLESHOOTING

1	VEHICLE BROUGHT TO WORKSHOP

NEXT

2	CUSTOMER PROBLEM ANALYSIS

NEXT

3	CHECK BODY MULTIPLEX COMMUNICATION SYSTEM

(a) Check for DTC output.
HINT:
(See page MP-23)

- **MULTIPLEX DTC OUTPUTS (PROCEED TO "BODY MULTIPLEX COMMUNICATION SYSTEM")**
- **NO MULTIPLEX DTC (GO TO STEP 4)**

4	CHECK CAN COMMUNICATION SYSTEM

(a) Check for DTC output.
HINT:
(See page CA-7)

- **CAN DTC OUTPUTS (PROCEED TO "CAN COMMUNICATION SYSTEM")**
- **NO CAN DTC (GO TO STEP 5)**

5	PROBLEM SYMPTOMS CONFIRMATION

NEXT

6	PROBLEM SYMPTOMS TABLE

(a) (See page ME-17)

NEXT

ME

7	**CIRCUIT INSPECTION**

NEXT

8	**REPAIR OR REPLACE**

NEXT

9	**CONFIRMATION TEST**

NEXT

ME	**END**

CUSTOMIZE PARAMETERS

1. BUZZER ON / OFF SETTING

(a) The buzzer ON / OFF setting, which is a setting of the buzzer function of the combination meter, can disable the driver's seat belt buzzer and front passenger's seat belt buzzer.

NOTICE:

Basically, these buzzers should be set on for safe driving. However, perform the following procedures only if it is necessary to set the buzzer off.

PROCEDURE:

Steps	Driver's Seat Belt Buzzer	Front Passenger's Seat Belt Buzzer
1	Turn the ignition switch on (IG).	Turn the ignition switch on (IG).
2	Press the ODO / TRIP switch until odometer displays "ODO".	Press the ODO / TRIP switch until odometer displays "ODO".
3	Turn the ignition switch off.	Turn the ignition switch off.
4	Turn the ignition switch on (IG) while depressing the brake pedal.	Turn the ignition switch on (IG) while depressing the brake pedal.
5	Press the ODO / TRIP switch immediately (within 6 seconds) and hold it down for 10 seconds or more.	Sit in the front passenger seat. Press the ODO / TRIP switch immediately (within 6 seconds after turning the power switch ON) and hold it down for 10 seconds or more.
6	Continue holding down the ODO / TRIP switch and fasten the driver's seat belt.	Continue holding down the ODO / TRIP switch and fasten the front passenger's seat belt.
7	Check that the odometer displays either "b-on" or "b-off". (*)	Check that the odometer displays either "b-on" or "b-off". (*)
8	Press the ODO/TRIP switch to change the display to "b-off".	Press the ODO/TRIP switch to change the display to "b-off".
9	Turn the ignition switch off.	Turn the ignition switch off.
10	Turn the ignition switch on (IG) while depressing the brake pedal.	Turn the ignition switch on (IG) while depressing the brake pedal.
11	Check that no buzzer sounds.	Check that no buzzer sounds when sitting on the front passenger's seat.

*:"b-off" indicates that the buzzer is OFF. "b-on" indicates that the buzzer is ON. The buzzer ON / OFF setting will be finished (the odometer will display "ODO") if the ODO / TRIP switch is not operated for 10 seconds or more. In this case, perform step 11 to check that buzzer ON / OFF setting is complete. If it is not complete, start from step 1 again.

NOTICE:

When either the battery cable or the combination meter connector is disconnected, these buzzers are set on.

2. CUSTOMIZE PARAMETER (Using a intelligent tester)

(a) The following items can the possible items to be customized.

NOTICE:

- **Be sure to record the current value before customizing.**

- **When performing troubleshooting, be aware that the functions may be set to OFF by customizing. (Example: In case of the symptom in which "The wireless operation does not function", check that the wireless operation is not set to OFF by customizing, then perform the troubleshooting)**

WARNING BUZZER:

DISPLAY (ITEM)	DEFAULT	CONTENTS	SETTING
KEY REMND VOLUM	LARGE	Function to change volume of key remind warning buzzer.	Big / Middle / Small
KEY REMND SOUND	900 ms	Function to change cycle of key remind warning buzzer.	600 ms / 900 ms / 1,200 ms

3. TIME ZONE SETTING (w/ Navigation system)

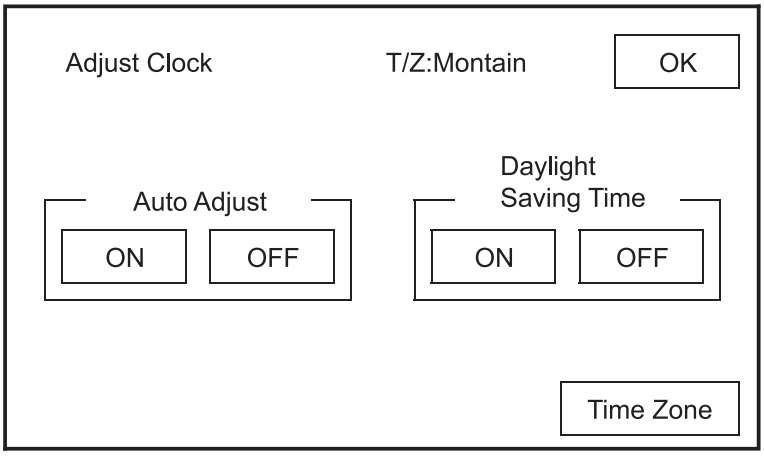

Press the “Time Zone” in the display above.

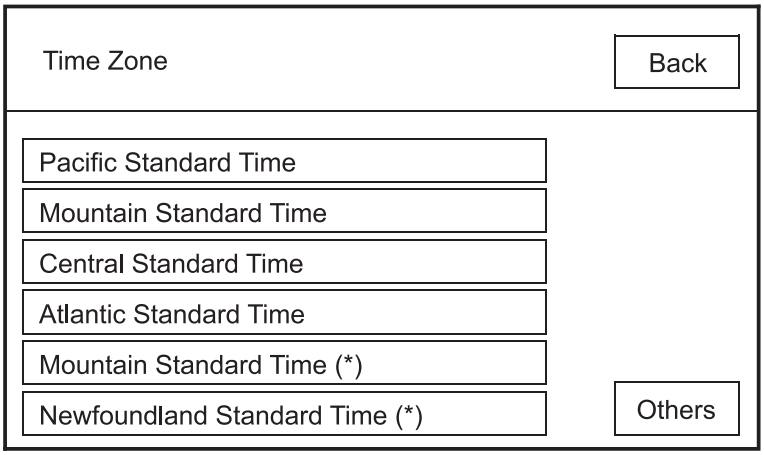

Select an appropriate time zone

(*): Canada only

H

E125579E01

PROBLEM SYMPTOMS TABLE

HINT:
Inspect the related "Fuse" and "Relay" before confirming the suspected area as shown in the charts below.

MALFUNCTION SYSTEM:

Symptom	Suspected area	See page
Entire combination meter does not operate.	Refer to troubleshooting	ME-40
Seat belt warning light for driver seat does not operate.	Refer to troubleshooting	ME-54
Seat belt warning light for passenger seat does not operate.	Refer to troubleshooting	ME-57
Clock display malfunction.	Refer to troubleshooting	ME-64
Operating light control rheostat does not change light brightness.	Refer to troubleshooting	ME-61

METER GAUGES:

Symptom	Suspected area	See page
Speedometer malfunction.	Refer to troubleshooting	ME-42
Tachometer malfunction.	Refer to troubleshooting	ME-46
Fuel receiver gauge malfunction.	Refer to troubleshooting	ME-49
Engine coolant temperature receiver gauge malfunction.	Refer to troubleshooting	ME-52

WARNING LIGHTS:

Symptom	Suspected area	See page
Check engine warning light does not come on.	1. ECM	ES-421
	2. Wire Harness or Connector	-
	3. Combination Meter Assembly	ME-69
Discharge warning light does not come on.	1. LED	ME-33
	2. Front Controller	-
	3. Wire Harness or Connector	-
	4. Combination Meter Assembly	ME-69
Brake warning light does not come on.	1. LED	ME-33
	2. Brake Actuator assembly (ABS) (*1)	BC-79
	3. ABS and Traction Actuator assembly (VSC) (*2)	BC-221
	4. Wire Harness or Connector	-
	5. Combination Meter Assembly	ME-69
Brake warning light does not go off.	1. LED	ME-33
	2. Brake Actuator assembly (ABS) (*1)	BC-73
	3. ABS and Traction Actuator assembly (VSC) (*2)	BC-214
	4. Wire Harness or Connector	-
	5. Combination Meter Assembly	ME-69
ABS warning light does not come on.	1. LED	ME-33
	2. Brake Actuator assembly (ABS) (*1)	BC-71
	3. ABS and Traction Actuator assembly (VSC) (*2)	BC-206
	4. Wire Harness or Connector	-
	5. Combination Meter Assembly	ME-69
ABS warning light does not go off.	1. LED	ME-33
	2. Brake Actuator assembly (ABS) (*1)	BC-67
	3. ABS and Traction Actuator assembly (VSC) (*2)	BC-202
	4. Wire Harness or Connector	-
	5. Combination Meter Assembly	ME-69

Symptom	Suspected area	See page
AIRBAG warning light does not come on.	1. Airbag Sensor Assembly Center	RS-195
	2. Wire Harness or Connector	-
	3. Combination Meter Assembly	ME-69
AIRBAG warning light does not go off.	1. Airbag Sensor Assembly Center	RS-190
	2. Wire Harness or Connector	-
	3. Combination Meter Assembly	ME-69
Open door warning light does not come on.	1. LED	ME-33
	2. Door Courtesy Switch	LI-65
	3. Wire Harness or Connector	-
	4. Body ECU	-
	5. Combination Meter Assembly	ME-69
Low engine oil pressure warning light does not come on.	1. LED	ME-33
	2. Engine Oil Pressure Warning Switch	ME-38
	3. Front Controller	-
	4. Wire Harness or Connector	-
	5. Combination Meter Assembly	ME-69
Security warning light does not come on.	1. Combination Meter Assembly	ME-69
	2. Engine Immobiliser System (*3)	EI-38
	3. Theft Deterrent System ECU (*4)	TD-40
	4. Wire Harness or Connector	-
Fuel level warning light does not come on.	1. LED	ME-33
	2. Fuel Sender Gauge Assembly	ME-38
	3. Wire Harness or Connector	-
	4. Combination Meter Assembly	ME-69
ACC W warning light does not come on (Radar cruise). (*5)	1. Combination Meter Assembly	ME-69
	2. Refer to troubleshooting	CC-52
	3. Wire Harness or Connector	-

INDICATOR LIGHTS:

Symptom	Suspected area	See page
Turn indicator light does not come on.	1. Combination Meter Assembly	ME-69
	2. Turn Signal and Hazard Warning System	LI-18
	3. Wire Harness or Connector	-
High beam indicator light does not come on.	1. LED	ME-33
	2. Combination Switch ECU	-
	3. Body ECU	-
	4. Wire Harness or Connector	-
	5. Combination Meter Assembly	ME-69
CRUISE indicator light does not come on.	1. LED	ME-33
	2. Refer to troubleshooting	CC-28
	3. Wire Harness or Connector	-
	4. Combination Meter Assembly	ME-69
SLIP indicator light does not come on. (*2)	1. LED	ME-33
	2. ABS and Traction Actuator assembly (VSC)	BC-227
	3. Wire Harness or Connector	-
	4. Combination Meter Assembly	ME-69
SLIP indicator light does not go off. (*2)	1. LED	ME-33
	2. ABS and Traction Actuator assembly (VSC)	BC-223
	3. Wire Harness or Connector	-
	4. Combination Meter Assembly	ME-69

Symptom	Suspected area	See page
VSC indicator light does not come on. (*2)	1. LED	ME-33
	2. ABS and Traction Actuator assembly (VSC)	BC-212
	3. Wire Harness or Connector	-
	4. Combination Meter Assembly	ME-69
VSC indicator light does not go off. (*2)	1. LED	ME-33
	2. ABS and Traction Actuator assembly (VSC)	BC-208
	3. Wire Harness or Connector	-
	4. Combination Meter Assembly	ME-69
TAIL (*6)/HEAD (*7) indicator light does not come on.	1. LED	ME-33
	2. Combination Switch ECU	-
	3. Body ECU	-
	4. Wire Harness or Connector	-
	5. Combination Meter Assembly	ME-69
WASHER indicator light does not come on.	1. LED	ME-33
	2. Front Controller	-
	3. Wire Harness or Connector	-
	4. Combination Meter Assembly	ME-69
A/T shift indicator light does not come on.	1. LED	ME-33
	2. Park/Neutral Position Switch	AX-18
	3. ECM	ES-33
	4. Wire Harness or Connector	-
	5. Combination Meter Assembly	ME-69
MAINT REQD indicator light does not come on. (*7)	1. LED	ME-33
	2. Refer to troubleshooting	ME-39
	3. Combination Meter Assembly	ME-69
Key indicator light does not come on. (*4)	1. LED	ME-33
	2. Certification ECU	TD-9
	3. Wire Harness or Connector	-
	4. Combination Meter Assembly	ME-69
Headlight auto level indicator light does not come on.	1. Headlight auto level ECU	LI-18
	2. Wire Harness or Connector	-
	3. Combination Meter Assembly	ME-69
NORM/READY/CRUISE indicator light does not come on. (*5)	1. LED	ME-33
	2. Dynamic Laser Cruise Control System	CC-52
	3. Wire Harness or Connector	-
	4. Combination Meter Assembly	ME-69

CRUISE INFORMATION AREA:

Symptom	Suspected area	See page
Cruise information display dose not turn on.	1. Wire Harness or Connector	-
	2. ECM	-
	3. Combination Meter Assembly	ME-69

BUZZER:

Symptom	Suspected area	See page
Key reminder warning buzzer dose not sound.	1. Combination Meter Assembly	ME-69
	2. Refer to troubleshooting (*3)	EI-12
	3. Refer to troubleshooting (*4)	TD-9
	4. Wire Harness or Connector	-

Symptom	Suspected area	See page
Seat belt warning buzzer dose not sound.	1. Combination Meter Assembly	ME-69
	2. Front Seat Inner Belt Assembly	-
	3. Wire Harness or Connector	-

ACCESSORY METER ASSEMBLY:

Symptom	Suspected area	See page
Outside temperature/Trip time/Average dose not display	1. Wire Harness or Connector	-
	2. A/C Control ECU	AC-29
	3. Combination Meter Assembly	ME-69
	4. Accessory meter Assembly	-

*1: w/o VSC
*2: w/ VSC
*3: w/o Smart Key System
*4: w/ Smart Key System
*5: w/ Dynamic Laser Cruise Control System
*6: Except U.S.A.
*7: U.S.A.
HINT:
Refer to on-vehicle inspection in the combination meter.

TERMINALS OF ECU

1. COMBINATION METER ASSEMBLY

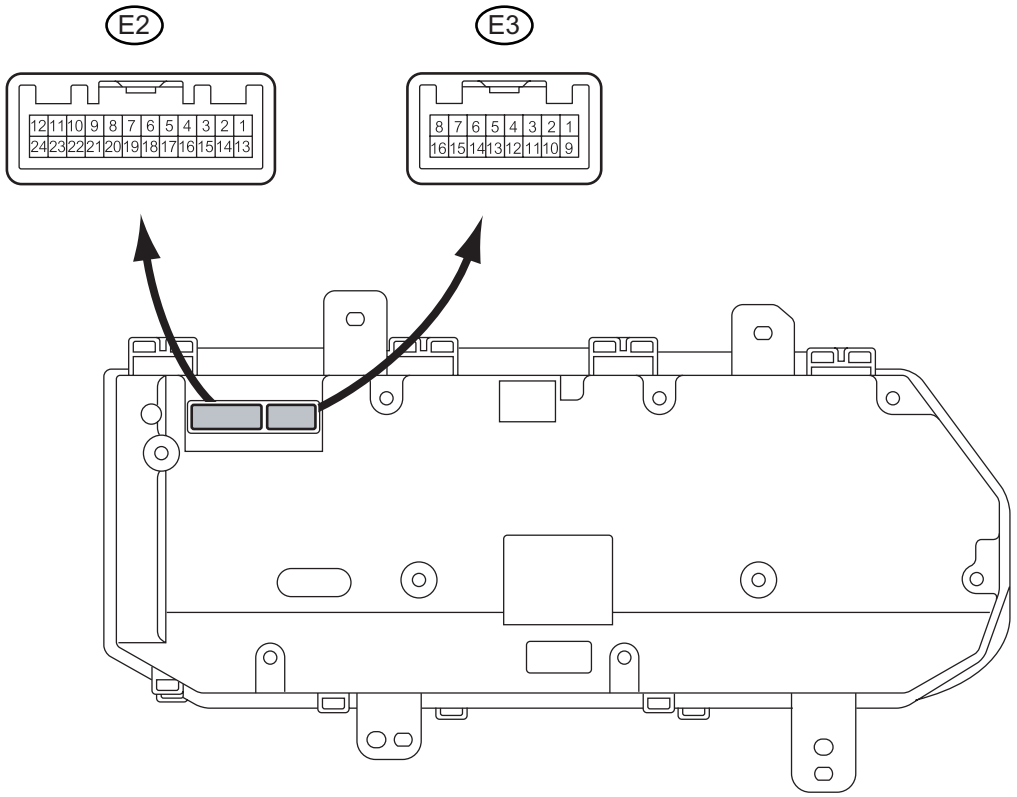

Symbols (Terminal No.)	Wiring Color	Terminal Description	Condition	Specified Condition
AIRBAG (E3-1) - Body ground	LG - Body ground	Airbag signal	Ignition switch on (IG), AIRBAG warning light ON → OFF	Below 1 V → 7 to 12 V
TURN R (E3-3) - Body ground	P - Body ground	Turn signal R	Ignition switch on (IG), turn signal RH indicator light OFF → ON	Below 1 V → 10 to 14 V
TURN L (E3-4) - Body ground	B - Body ground	Turn signal L	Ignition switch on (IG), turn signal LH indicator light OFF → ON	Below 1 V → 10 to 14 V
CHK E/G (E3-9) - Body ground	R - Body ground	Check engine signal	Ignition switch on (IG), CHECK ENGINE warning light ON → OFF	Below 2.5 V → 10 to 14 V
H-LP LEVEL (E3-10) - Body ground	G - Body ground	Headlight auto level signal	Ignition switch on (IG), headlight auto level indicator light ON → OFF	Below 1 V → 10 to 14 V
BRAKE LEVEL SW (E3-11) - Body ground	V - Body ground	Brake fluid level signal	Ignition switch on (IG), brake warning light ON → OFF	Below 1 V → 10 to 14 V
PBKL (3-13) - Body ground	G - Body ground	Seat belt condition signal (Passenger side)	Ignition switch on (IG), passenger seat belt indicator light OFF → Blinks	10 to 14 V → Below 1 V
SI (E3-14) Body ground	W - Body ground	Speed signal (Input)	Ignition switch on (IG), turn the wheel slowly	Pulse generation (See waveform 1)
FUEL (E3-15) - Body ground	GR - Body ground	Fuel level signal	Ignition switch on (IG), fuel level FULL → EMPTY	Below 1 V → 4 to 7 V
FE (E3-16) - E2-10	P - Body ground	Ground (Fuel ground)	Always	Below 1 V
DOME+B (E2-1) Body ground	V - Body ground	Battery	Always	10 to 14 V
ECU-B (E2-2) Body ground	B - Body ground	Battery	Always	10 to 14 V
MPX- (E2-4) - Body ground	P - Body ground	Communication circuit	-	-

Symbols (Terminal No.)	Wiring Color	Terminal Description	Condition	Specified Condition
PANEL DIM (E2-8) (*) - Body ground	Y - Body ground	Panel dimmer signal	Ignition switch on (IG), light control rheostat position MID	Pulse generation (See waveform 2)
P BELT (E2-9) - Body ground	B - Body ground	Seat belt condition signal (Passenger side)	Ignition switch on (IG), passenger seat belt indicator light OFF → Blinks	Pulse generation (See waveform 3)
S-GND (E2-10) - Body ground	W-B - Body ground	Ground (Signal ground)	Always	Below 1 V
ILL - (E2-11) - Body ground	R - Body ground	Illumination signal	Ignition switch on (IG), TAIL ON, and light control rheostat position MID	Pulse generation (See waveform 4)
P-GND (E2-12) - Body ground	W-B - Body ground	Ground (Power ground)	Always	Below 1 V
IG2 (E2-13) - Body ground	R - Body ground	Battery	Ignition switch off → on (IG)	Below 1 V → 10 to 14 V
TACHO (E2-14) - Body ground	O- Body ground	Tachometer signal	Engine running	Pulse generation (See waveform 5)
4P (E2-15) - Body ground	SB - Body ground	Speed signal (Output)	Ignition switch on (IG), turn the wheel slowly	Pulse generation (See waveform 1)
MPX+ (E2-16) - Body ground	LG - Body ground	Communication circuit	-	-
SECURITY (E2-18) (*2) - Body ground	Y - Body ground	Security signal	Ignition switch off, SECURITY warning light ON → OFF	10 to14 V → Below 1 V
TC SW (E2-19) - Body ground	V - Body ground	Tail cancel switch signal	Tail cancel switch OFF → ON	4 to 6 V → Below 1 V
RL (E2-20) - Body ground	B - Body ground	Light control rheostat signal	Ignition switch on (IG)	4 to 6 V
RV (E2-21) - Body ground	R - Body ground	Light control rheostat signal	Ignition switch on (IG), light control rheostat position MIN → MAX	Below 1 V → 4 to 6 V
RE (E2-22) - Body ground	W - Body ground	Ground (Rheostat ground)	Always	Below 1 V

*1: w/o Navigation System
*2: w/ Theft Deterrent System

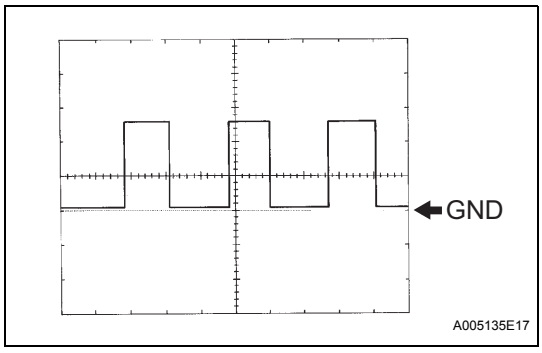

(a) Waveform 1 (Reference): Using an oscilloscope:

Item	Condition
Tool setting	5 V/DIV., 20 ms/DIV.
Vehicle condition	Driving at approx. 20 km/h (12 mph)

HINT:
As vehicle speed increases, the cycle of the signal waveform narrows.

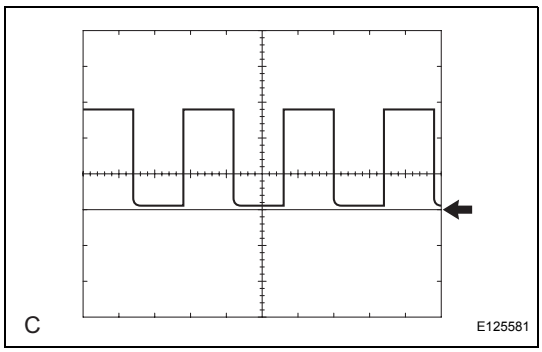

(b) Waveform 2 (Reference): Using an oscilloscope:

Item	Condition
Tool setting	2 V/DIV., 2 ms/DIV.
Vehicle condition	Ignition switch ON (IG), light control rheostat position MID

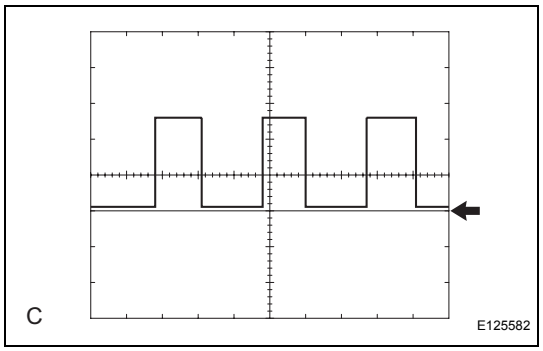

(c) Waveform 3 (Reference): Using an oscilloscope:

Item	Condition
Tool setting	5 V/DIV., 200 ms/DIV.
Vehicle condition	Ignition switch ON (IG), passenger seat belt indicator light blinks

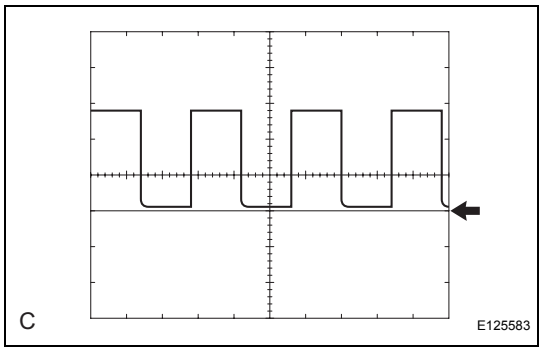

(d) Waveform 4 (Reference): Using an oscilloscope:

Item	Condition
Tool setting	5 V/DIV., 2 ms/DIV.
Vehicle condition	Ignition switch ON (IG), light control rheostat position MID

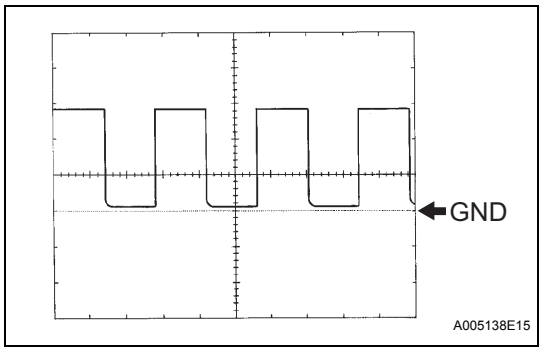

(e) Waveform 5 (Reference): Using an oscilloscope:

Item	Condition
Tool setting	5 V/DIV., 10 ms/DIV.
Vehicle condition	Engine idle speed

ME

2. ACCESSORY METER ASSEMBLY

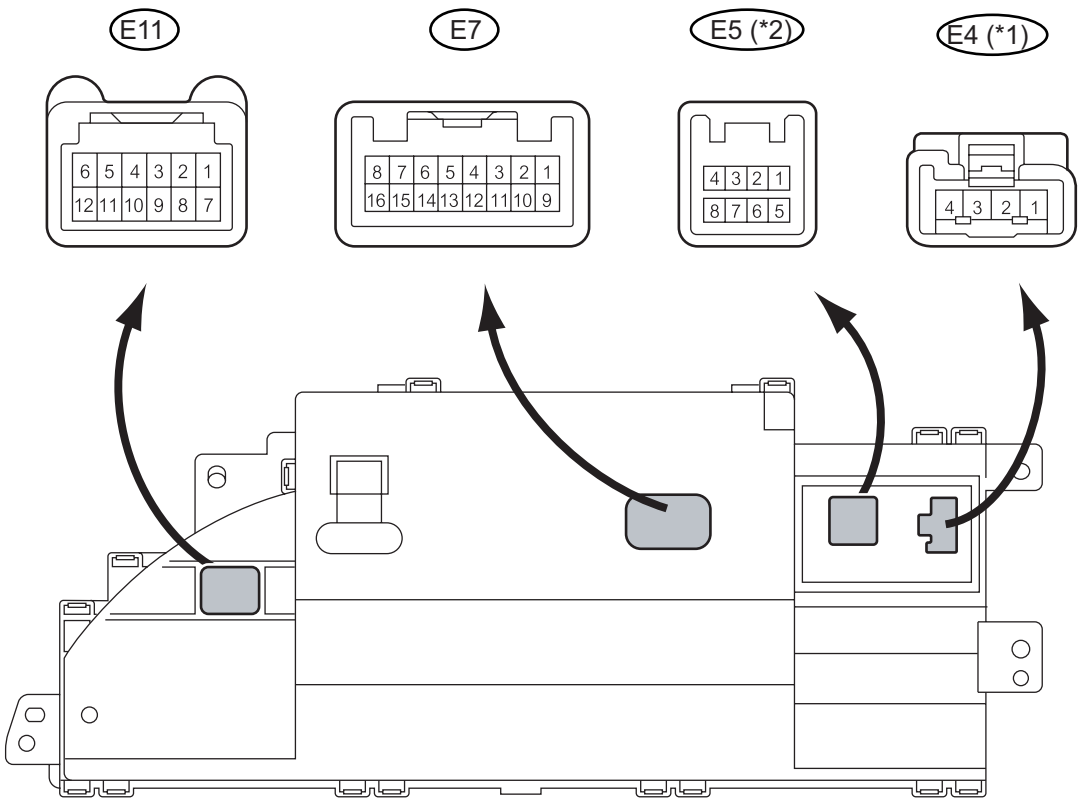

H

E125584E01

Symbols	Wiring	Terminal Description	Condition	Specified Condition
ACC (E7-1) - Body ground	GR - Body ground	Battery	Ignition switch off → on (ACC)	Below 1 V → 10 to 14 V
IG2 (E7-2) - Body ground	G - Body ground	Battery	Ignition switch off → on (IG)	Below 1 V → 10 to 14 V
TAIL (TR) (E7-5) - Body ground	Y - Body ground	Illumination signal	Ignition switch on (IG), light control rheostat position MID	Pulse generation (See waveform 1)
RE1 (SW) (E7-7) - Body ground	G - Body ground	Display switch signal	Ignition switch on (IG), display switch is pushed in	4 to 6 V → Below 1 V
GND1 (E7-8) - Body ground	W-B - Body ground	Ground (Power ground)	Always	Below 1 V
GND1 (E7-9) - Body ground	R - Body ground	Battery	Always	10 to 14 V
TX1+ (E7-11) (*1) - Body ground	Y - Body ground	Communication line	-	-
TX+ (E7-12) (*1) - Body ground	BR - Body ground	Communication line	-	-
TX1- (E7-13) (*1) - Body ground	B - Body ground	Communication line	-	Below 1 V
TX1- (E7-14) (*1) - Body ground	R - Body ground	Communication line	-	-

Symbols	Wiring	Terminal Description	Condition	Specified Condition
SG1 (E7-15) - Body ground	W - Body ground	Display switch signal	Always	Below 1 V
SG (E7-16) - Body ground	W-B - Body ground	Ground (Signal ground)	Ground (Signal ground)	Below 1 V
IG2 (E11-1) - Body ground	W - Body ground	Battery	Ignition switch off → on (IG)	Below 1 V → 10 to 14 V
MSW (E11-3) (*1) - Body ground	G - Body ground	Display switch signal	Ignition switch on (IG), display switch is pushed in	4 to 6 V → Below 1 V
SG1 (E11-4) (*1) - Body ground	W - Body ground	Display switch signal	Always	Below 1 V
SGND (E11-6) - Body ground	W-B - Body ground	Ground (Signal ground)	Always	Below 1 V
ACAN (E11-7) - Body ground	V - Body ground	Illumination signal	Ignition switch on (IG), TAIL OFF → ON	Below 1 V → 10 to 14 V
P-BELT (E11-9) - Body ground	B - Body ground	Seat belt condition signal (Passenger side)	Ignition switch on (IG), sit on the passenger seat and passenger seat belt warning light OFF → blinks	Pulse generation (See waveform 2)
P-AIRBAG-OFF (E11-10) - Body ground	L - Body ground	P-AIRBAG-OFF signal	Ignition switch on (IG), P-AIRBAG-OFF indicator light OFF → ON	10 to 14 V → Below 1 V
P-AIRBAG-ON (E11-11) - Body ground	BR - Body ground	P-AIRBAG-ON signal	Ignition switch on (IG), P-AIRBAG-ON indicator light OFF → ON	10 to 14 V → Below 1 V
B (+) (E4-1) (*1) - Body ground	W - Body ground	Battery	Always	10 to 14 V
EARTH (E4-2) (*1) - Body ground	W-B - Body ground	Ground	Always	Below 1 V
ILL (+) (E4-3) (*1) - Body ground	G - Body ground	Illumination signal	Ignition switch on (IG), light control switch OFF → ON	Below 1 V → 10 to 14 V
ACC (+) (E4-4) (*1) - Body ground	B - Body ground	Battery	Ignition switch off → on (IG)	Below 1 V → 10 to 14 V
ACC (+) (E5-4) (*2) - Body ground) (E	B - Body ground	Battery	Ignition switch off → on (IG)	Below 1 V → 10 to 14 V
TX- (E5-5) (*2) - Body ground	LG - Body ground	Communication line	-	-
TX+ (E5-6) (*2) - Body ground	V - Body ground	Communication line	-	-
EARTH (E5-7) (*2) - Body ground	W-B - Body ground	Ground	Always	Below 1 V
B (+) (E5-8) (*2) - Body ground	W - Body ground	Battery	Always	10 to 14 V

*1: w/o Navigation System
*2: w/ Navigation System

(a) Waveform 1 (Reference): Using an oscilloscope:

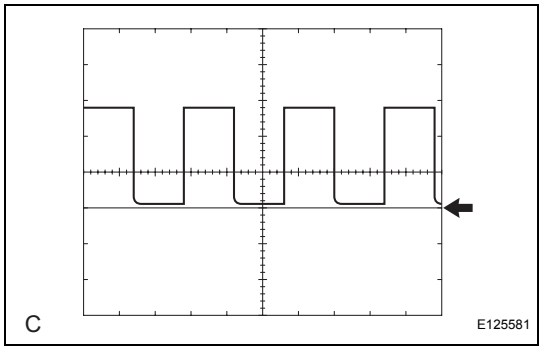

Item	Condition
Tool setting	2 V/DIV., 2 ms/DIV.
Vehicle condition	Ignition switch ON (IG), light control rheostat position MID

ME

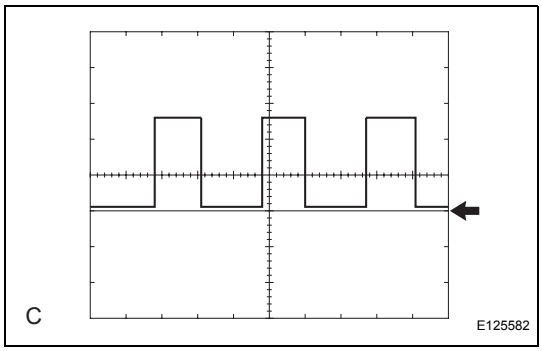

(b) Waveform 2 (Reference): Using an oscilloscope:

Item	Condition
Tool setting	5 V/DIV., 200 ms/DIV.
Vehicle condition	Ignition switch ON (IG), passenger seat belt indicator light blinks

3. ECM

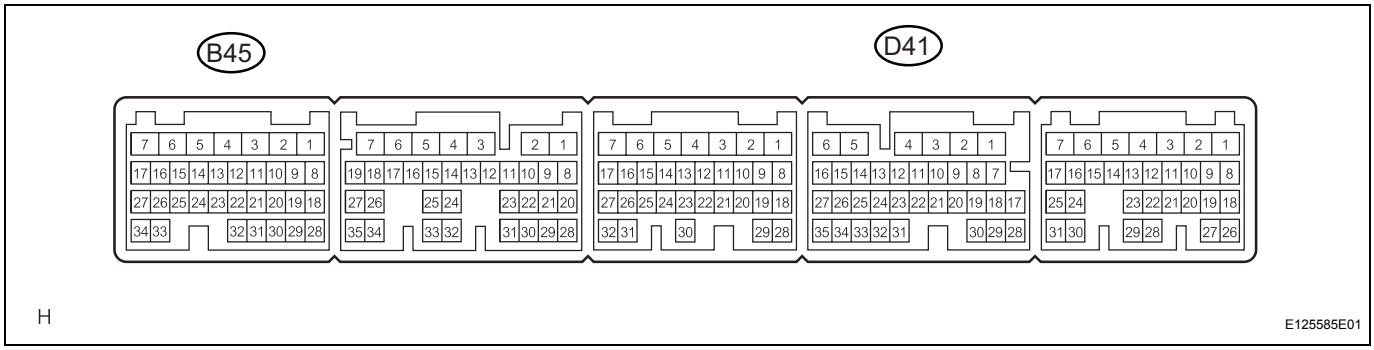

Symbols (Terminal No.)	Wiring Color	Terminal Description	Condition	Specified Condition
TACH (D41-1) - Body ground	W - Body ground	Tachometer signal	Ignition switch off → on (IG), Engine idle speed	Pulse generation (See waveform 1)

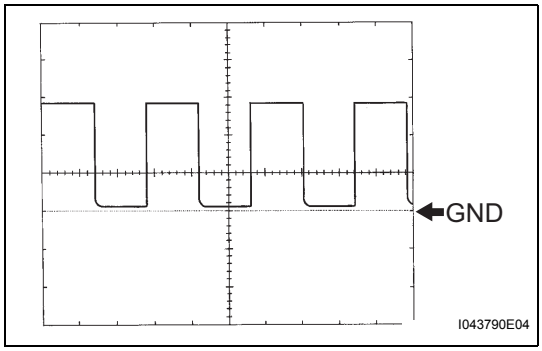

(a) Waveform 1 (Reference): Using an oscilloscope:

Item	Condition
Tool setting	10 V/DIV., 20 V/DIV.
Vehicle condition	Engine idle speed

4. COMBINATION METER INNER CIRCUIT

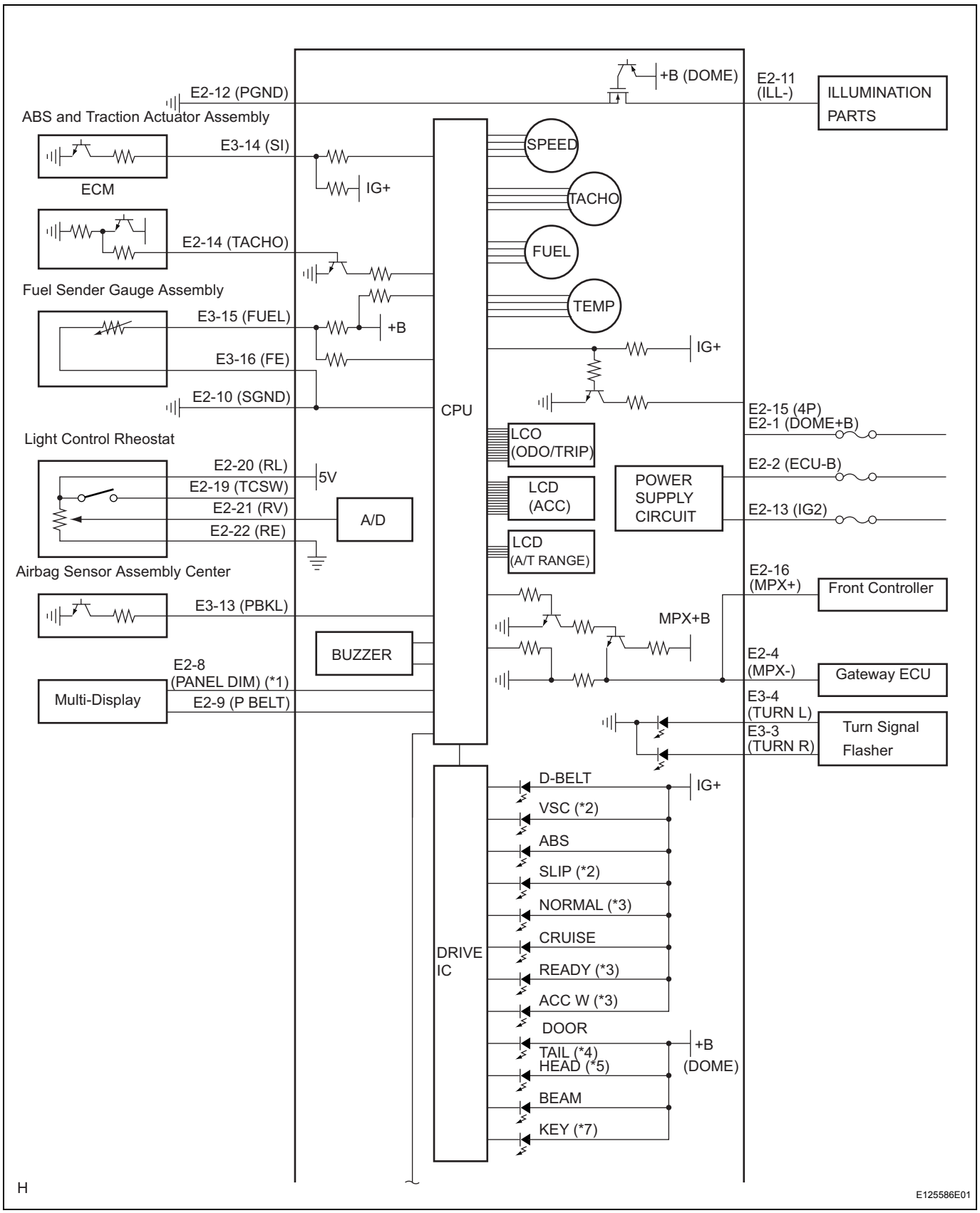

ME

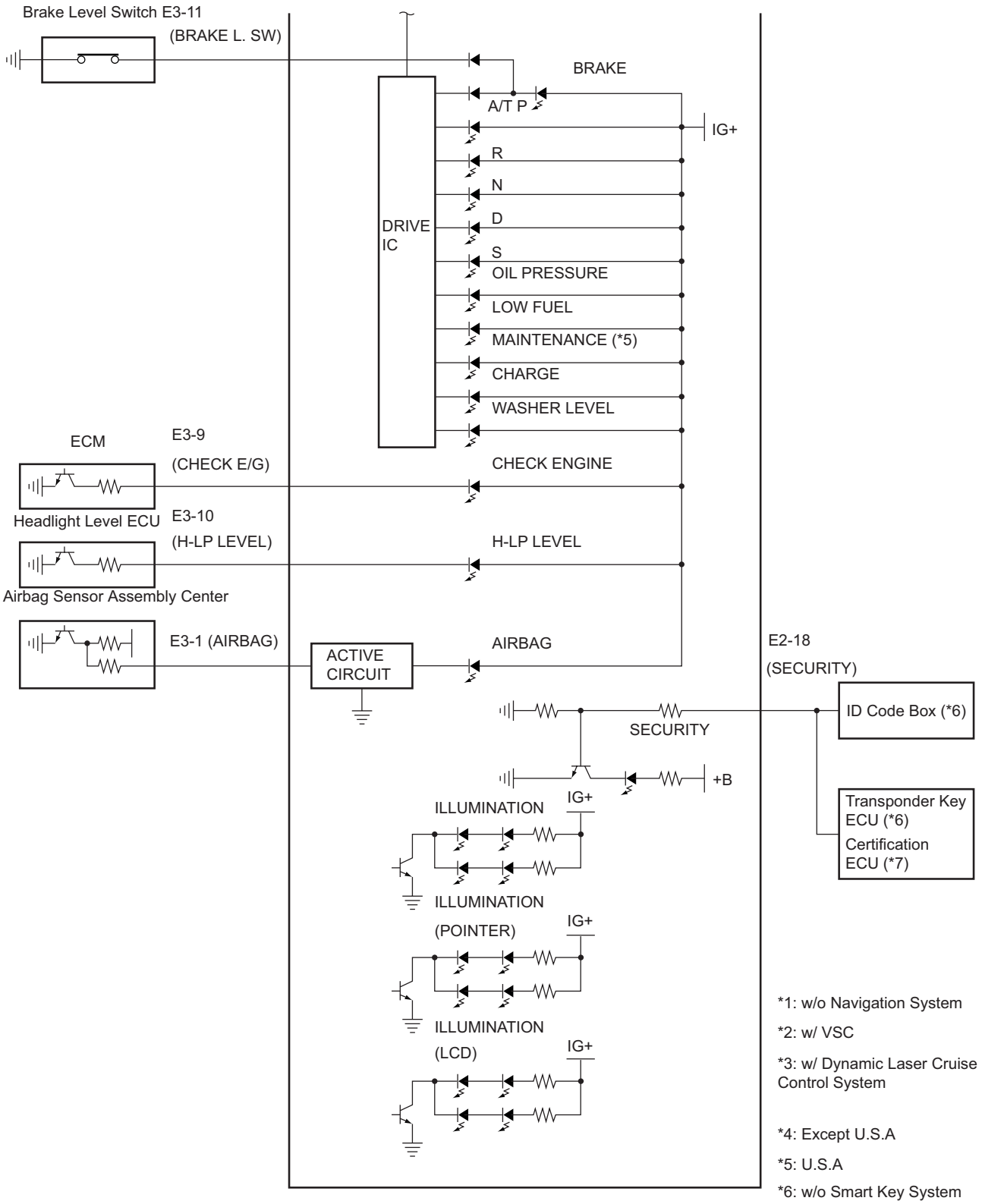

ME

H

E125587E01

Connectors:

Terminal No.		Wire harness side
E3	1	Airbag Sensor Assembly Center
	2	-
	3	Turn Signal Flasher (R)
	4	Turn Signal Flasher (L)
	5	-
	6	-
	7	-
	8	-
	9	ECM (Check E/G)
	10	Headlight Beam Level Control ECU
	11	Brake Fluid Level Warning Switch
	12	-
	13	Airbag Sensor Assembly Center
	14	ABS and Traction Actuator Assembly (VSC) (*1), Brake Actuator Assembly (ABS) (*2)
	15	Fuel Sender Gauge Assembly (Fuel)
	16	Fuel Sender Gauge Assembly (Fuel Ground)
E2	1	DOME Fuse
	2	ECU-B Fuse
	3	-
	4	Multiplex Communication Line
	5	-
	6	-
	7	-
	8	Multi-Display (*3)
	9	Multi-Display
	10	Ground (Signal Ground)
	11	Illumination Parts
	12	Ground (Power Ground)
	13	IG2 Fuse
	14	ECM
	15	Each Parts That Use Speed Signal (ECM, Power Source ECU, Body ECU, Navigation ECU)
	16	Multiplex Communication Line
	17	-
	18	ID Code Box (*4), Transponder Key ECU (*4) / Certification ECU (*5)
	19	Light Control Rheostat (TC)
	20	Light Control Rheostat (T)
	21	Light Control Rheostat (RV)
	22	Ground (Light Control Rheostat Ground)
	23	-
	24	-

*1: w/ VSC
*2: w/o VSC
*3: w/o Navigation System
*4: w/o Smart key System
*5: w/ Smart key System

5. ACCESSORY METER INNER CIRCUIT

w/o Navigation System:

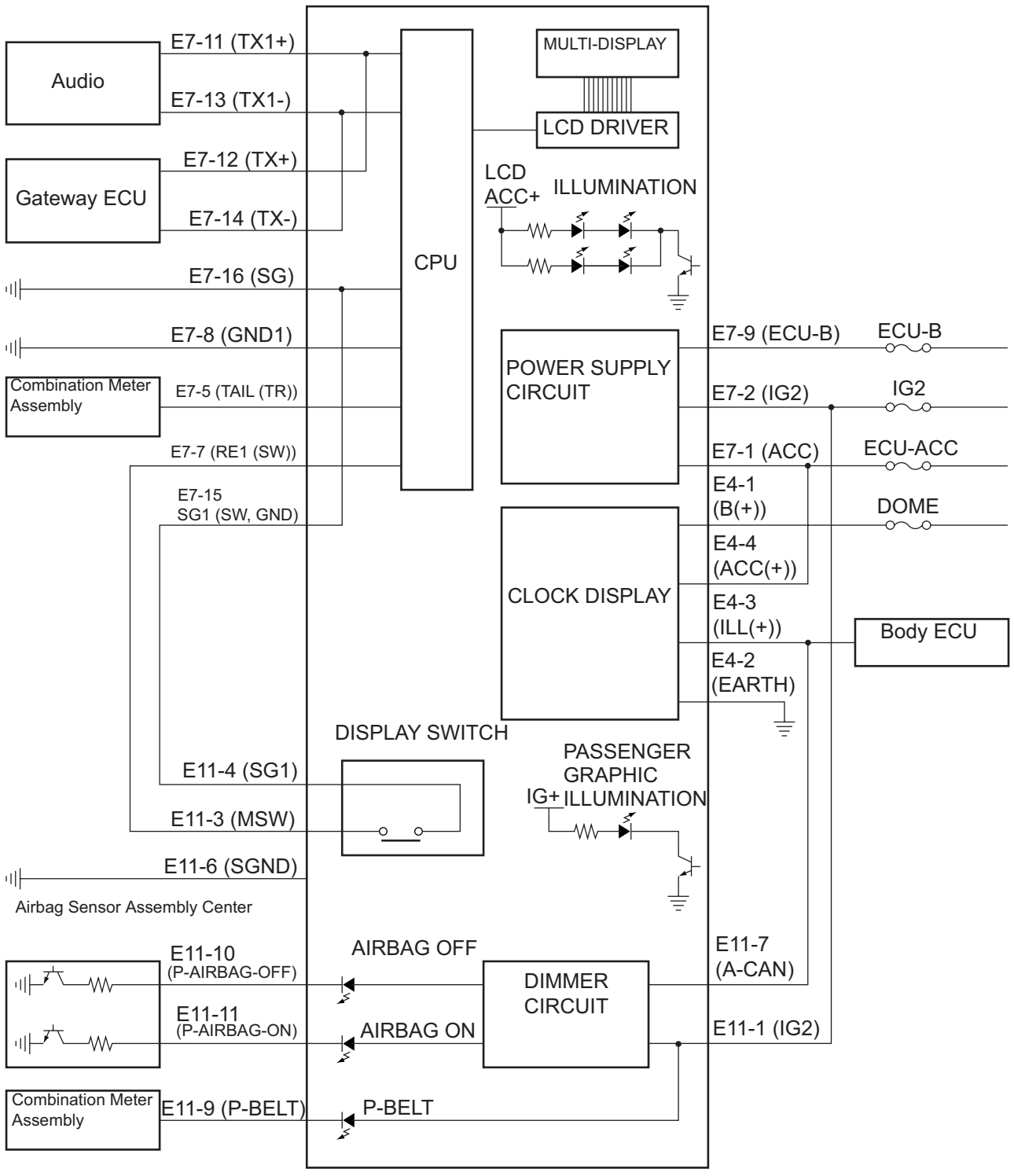

E125588E01

w/ Navigation System:

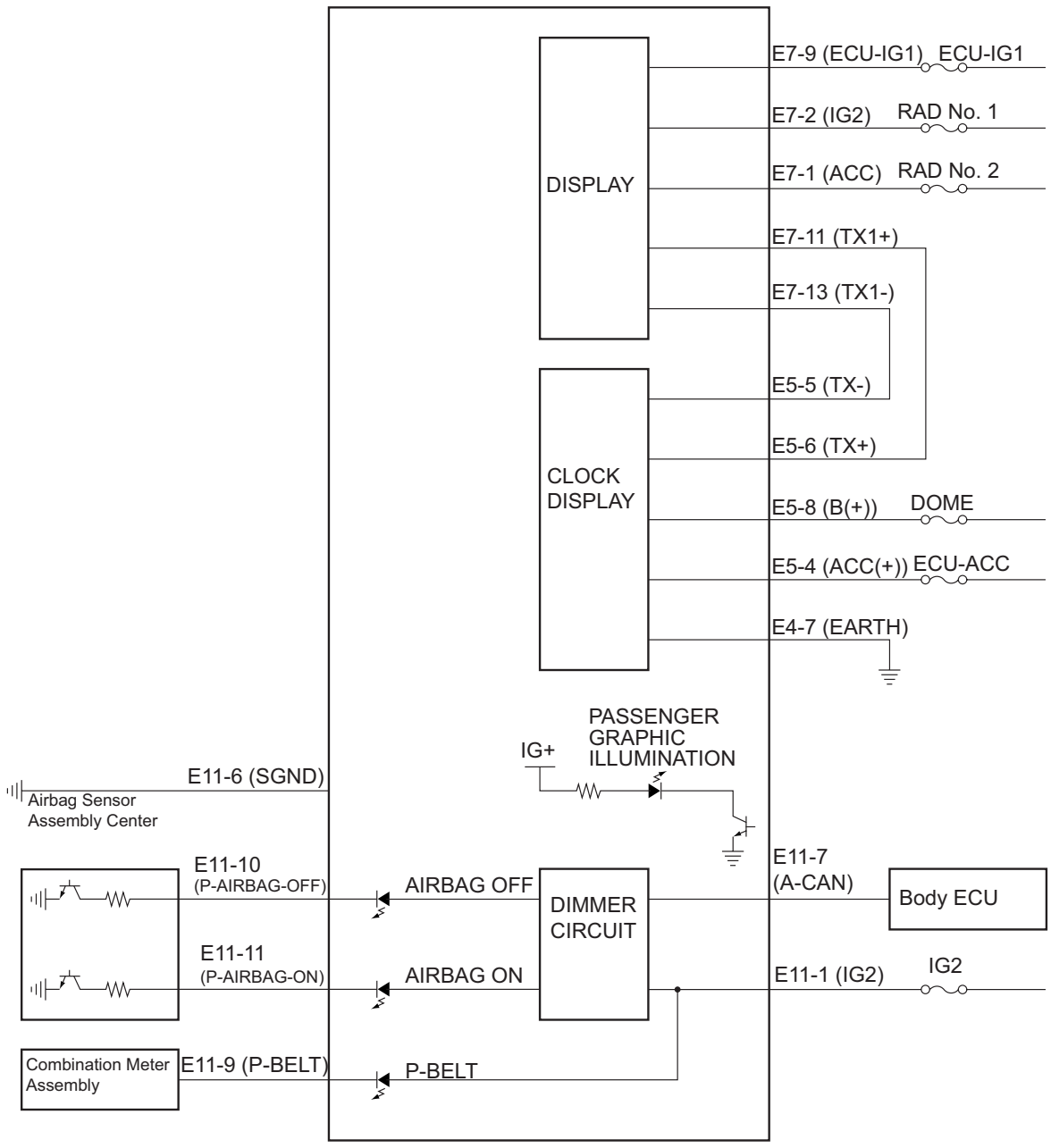

H

E125589E01

ME

Terminal No.		Wire harness side
E7	1	ECU-ACC Fuse
	2	IG2 Fuse
	3	-
	4	-
	5	Combination Meter Assembly
	6	-
	7	Display Switch (*1)
	8	Ground (Power Ground)
	9	ECU-B Fuse
	10	-
	11	Audio Controller
	12	Gateway ECU
	13	Audio Controller
	14	Gateway ECU
	15	Display Switch (*1)
	16	Ground (Signal Ground)
E11	1	DOME Fuse
	2	-
	3	Display Switch (*1)
	4	Display Switch (*1)
	5	-
	6	Ground (Signal Ground)
	7	Body ECU
	8	-
	9	Combination Meter Assembly
	10	Airbag Sensor Assembly Center
	11	Airbag Sensor Assembly Center
	12	-
E4 (*1)	1	DOME Fuse
	2	Ground (Power Ground)
	3	Body ECU
	4	ECU-ACC Fuse
E5 (*2)	1	-
	2	-
	3	-
	4	ECU-ACC Fuse
	5	Multi-Display
	6	Multi-Display
	7	Ground (Power Ground)
	8	IG2 Fuse

*1: w/o Navigation System
*2: w/ Navigation System

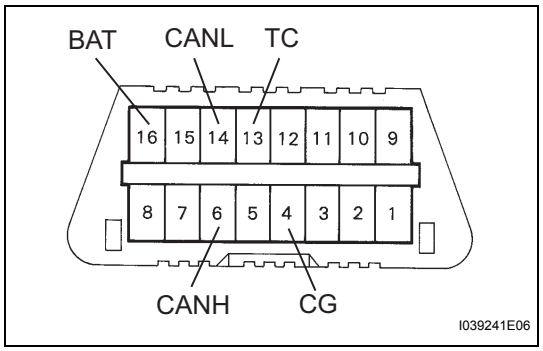

DIAGNOSIS SYSTEM

1. CHECK DLC3

(a) The vehicle's combination meter (ECU) uses CAN and the ISO 9141-2 for communication protocol. The terminal arrangement of the DLC3 complies with SAE J1962 and matches the ISO 9141-2 format.

Symbols (terminal No.)	Terminals Description	Condition	Specified condition
CG (4) - Body ground	Chassis ground	Always	Below 1 Ω
BAT (16) - Body ground	Battery positive	Always	11 to 14 V
CANH (6) - CANL (14)	HIGH-level CAN bus line	Ignition switch off	54 Ω to 67 Ω
CANH (6) - Body ground	HIGH-level CAN bus line	Ignition switch off	1 MΩ or higher
CANH (6) - CG (4)	HIGH-level CAN bus line	Ignition switch off	3 KΩ or higher
CANL (14) - Body ground	LOW-level CAN bus line	Ignition switch off	1 MΩ or higher
CANL (14) - CG (4)	LOW-level CAN bus line	Ignition switch off	3 KΩ or higher

ME

HINT:

If the display shows an error message after having connected the cable of the intelligent tester to the DLC3, turned ignition switch on (IG) and operated the tester, there is a problem on either the vehicle side or the tool side.

- If communication is normal when the tool is connected to another vehicle, inspect the DLC3 on the original vehicle.
- If communication is still impossible when the tool is connected to another vehicle, the problem is probably in the tool itself, so consult the Service Department listed in the tool's instruction manual.

FAIL-SAFE CHART

ENGINE COOLANT TEMPERATURE GAUGE:

Condition	Response	Recovery
Engine coolant temperature data is interrupted for 5 seconds.	The gauge needle indicates below "C".	Engine coolant temperature data is received.

SHIFT INDICATOR:

Condition	Response	Recovery
"P to D" data is interrupted for 3 seconds.	All indicator lights go off.	Normal data is received.
"S" data is interrupted for 3 seconds.	The "S" indicator light goes off.	Normal data is received.

GEAR POSITION INDICATOR (1 TO 5):

Condition	Response	Recovery
Gear position data is interrupted for 3 seconds seconds or a malfunction signal is received.	The indicator light goes off.	Normal data is received.

ABS & BRAKE:

Condition	Response	Recovery
ABS & Brake data is interrupted for 3 seconds.	The warning light comes on.	Normal data is received.

DOOR:

Condition	Response	Recovery
Regular data is interrupted.	The data received most recently remains indicated.	Normal data is received.

HEAD (*1) / TAIL (*2):

Condition	Response	Recovery
Regular data is interrupted.	The data received most recently remains indicated.	Normal data is received.

BEAM:

Condition	Response	Recovery
Regular data is interrupted.	The indicator light goes off.	Normal data is received.

KEY:

Condition	Response	Recovery
Regular data is interrupted.	The indicator light goes off.	Normal data is received.

MULTI-INFORMATION (INSTANTANEOUS FUEL CONSUMPTION/POSSIBLE RUNNING DISTANCE):

Condition	Response	Recovery
Cruise information data is interrupted for 60 seconds.	The display becomes blank (only measurement units are displayed).	Normal data is received.

ILLUMINATION:

Condition	Response	Recovery
The illumination data is interrupted for 10 seconds or abnormal data is received.	The display remains in daytime mode.	Normal data is received.

*1: U.S.A. only
*2: Except U.S.A.

DATA LIST / ACTIVE TEST

1. DATA LIST

(a) According to the DATA LIST displayed by the intelligent tester, you can read the values of the switches, sensors, actuators and so on without parts removal. Reading the DATA LIST as the first step of troubleshooting is one method to shorten work time.
(1) Warm up the engine.
(2) Turn the ignition switch off.
(3) Connect the intelligent tester to the DLC3.
(4) Turn the ignition switch on (IG).
(5) Operate the intelligent tester according to the steps on the display and select the "DATA LIST".

METER:

Item	Measurement Item / Range (Display)	Normal Condition	Diagnostic Note
SPEED METER	Vehicle speed / Min.: 0 km/h (0 mph), Max .: 255 km/h (158 mph)	Almost same as actual vehicle speed (When driving)	-
TACHO METER	Engine speed / Min.: 0 rpm, Max.: 12,750 rpm	Almost same as actual engine speed (When engine is running)	-
FUEL GAUGE	Fuel input signal Min.: 0, Max.: 255	Fuel gauge indicates (F): 35 Fuel gauge indicates (3/4): 85 Fuel gauge indicates (1/2): 145 Fuel gauge indicates (1/4): 186 Fuel gauge indicates (E): 205	-
LIGHT RHEOSTAT	Light control rheostat / Min.: 0, Max.: 255	Light control rheostat switch is Dark (0) → Bright (255)	-
ODO/TRIP SW	ODO/TRIP switch is ON / OFF	ON: Switch is pushed OFF: Switch is released	-
TRIP RESET SW	TRIP RESET switch is ON / OFF	ON: Switch is pushed OFF: Switch is released	-

BODY:

Item	Measurement Item / Range (Display)	Normal Condition	Diagnostic Note
D SEAT BUCKL SW	Driver seat belt buckle switch is ON / OFF	ON: Seat belt is fastened OFF: Seat belt is unfastened	-
OPEN DOOR WARN	Any door is OPEN / CLOSE	ON: Any door is opened OFF: All doors are closed	-
KEY UNLK WRN SW	Key unlock warning switch is ON / OFF	ON: Ignition key is inserted OFF: Ignition key is not inserted	-
PARKING BRAKE SW	Parking brake switch is ON / OFF	ON: Parking brake switch is ON OFF: Parking brake switch is OFF	-
D DOR CTY SW	Driver door is OPEN / CLOSE	ON: Driver door is closed OFF: Driver door is opened	-
P DOR CTY SW	Passenger door is OPEN / CLOSE	ON: Passenger door is closed OFF: Passenger door is opened	-
Rr DOR CTY SW	Rear door is OPEN / CLOSE	ON: Rear door is closed OFF: Rear door is opened	-

BODY No.5:

Item	Measurement Item / Range (Display)	Normal Condition	Diagnostic Note
WASHER LVL SW	Washer level warning switch is ON / OFF	ON: Washer level is low OFF: Washer level is proper	-
OIL PRESS SW	Engine oil pressure switch is ON / OFF	ON: Engine oil pressure is low OFF: Engine oil pressure is proper	-

Item	Measurement Item / Range (Display)	Normal Condition	Diagnostic Note
HOOD CURTESY SW	Hood is OPEN / CLOSE	ON: Hood is closed OFF: Hood is opened	-

SRS AIRBAG:

Item	Measurement Item / Range (Display)	Normal Condition	Diagnostic Note
D BUCKLE SW	Driver seat belt buckle switch is ON / OFF	ON: Seat belt is fastened OFF: Seat belt is unfastened	-
P BUCKLE SW	Passenger seat belt buckle switch is ON / OFF	ON: Seat belt is fastened OFF: Seat belt is unfastened	-

ENGINE:

Item	Measurement Item / Range (Display)	Normal Condition	Diagnostic Note
VEHICLE SPD	Vehicle speed / Min.: 0 km/h (0 mph), Max.: 255 km/h (158 mph)	Almost same as actual vehicle speed (when driving)	-
ENGINE SPD	Engine speed / Min.: 0 rpm, Max.: 16,383 rpm	Almost same as actual engine speed (when engine is running)	-
COOLANT TEMP	Coolant Temperature / Min.: -40°C (-40°F), Max.: 140°C (284°F)	After warming up: 80 to 95°C (176 to 203°F)	If the value is "-40°C (-40°F)" or "140°C (284°F)", sensor circuit is open or shorted.

ABS:

Item	Measurement Item / Range (Display)	Normal Condition	Diagnostic Note
(FR/FL/RR/RL) SPD	Vehicle speed / Min.: 0 km/h (0 mph), Max.: 326 km/h (202 mph)	Almost same as actual speed (when driving)	-
VEHICLE SPD	Vehicle speed / Min.: 0 km/h (0 mph), Max.: 255 km/h (158 mph)	Almost same as actual vehicle speed (when driving)	-
ENGINE SPD	Engine speed / Min.: 0 rpm, Max.: 6,000 rpm	Almost same as actual engine speed (when engine is running)	-

OCCUPANT DETECTION SENSOR:

Item	Measurement Item / Range (Display)	Normal Condition	Diagnostic Note
P BUCKLE SW	Passenger seat belt buckle switch is ON / OFF	ON: Seat belt is fastened OFF: Seat belt is unfastened	-
PASSENGER DETEC	Occupant detection sensor is ON / OFF	ON: Passenger is seated OFF: Passenger is not seated	-

COMBINATION SWITCH:

Item	Measurement Item / Range (Display)	Normal Condition	Diagnostic Note
F FOG LIGHT SW	Turn signal flasher is ON / OFF	ON: Front fog light is ON OFF: Front fog light is OFF	-
R FOG LIGHT SW	Rear fog light switch is ON / OFF	ON: Rear fog light is ON OFF: Rear fog light is OFF	-
TURN LEFT SW	Turn signal flasher is ON/OFF	ON: Turn signal flasher is ON OFF: Turn signal flasher is OFF	-
TURN LIGHT SW	Turn signal flasher is ON / OFF	ON: Turn signal flasher is ON OFF: Turn signal flasher is OFF	-
HEAD (*1) LIGHT SW	HEAD light switch is ON/OFF	ON: Headlight is ON OFF: headlight is OFF	-
TAIL (*2) LIGHT SW	TAIL light switch is ON /OFF	ON: Taillight is ON OFF: Taillight is OFF	-

(*1): U.S.A.
(*2): Except U.S.A.

2. ACTIVE TEST

(a) Performing the ACTIVE TEST using intelligent tester allows the meter, indicators and so on to operate without parts removal. Performing the ACTIVE TEST as the first step of troubleshooting is one way to shorten labor time.
It is possible to display the DATA LIST on the intelligent tester during the ACTIVE TEST.
(1) Connect the intelligent tester to the DLC3.
(2) Turn the ignition switch on (IG).
(3) From the display on the tester, perform the "ACTIVE TEST".

METER:

Item	Test Details	Diagnostic Note
SPEED METER	0 / 40 (24) / 80 (48) / 120 (72) / 160 (96) / 200 (120) / 240 (149) km/h (mph)	-
TACHOMETER	0rpm / 1000rpm / 2000rpm / 3000rpm / 4000rpm / 5000rpm / 6000rpm / 7000rpm	-
FUEL GAUGE	OFF, EMPTY, 1/2, FULL	-
COOLANT TEMP	LOW / NORMAL / HIGH	-
LOW FUEL WARN	FUEL WARN indicator light (OFF / ON)	Confirm that the vehicle is stopped, engine idling
OPEN DOOR WARN	DOOR (OFF / ON)	Confirm that the vehicle is stopped, engine idling
P-BELT REMIND	P-SEAT BELT indicator light (OFF / ON)	Confirm that the vehicle is stopped, engine idling
D-BELT REMIND	D-SEAT BELT indicator light (OFF / ON)	Confirm that the vehicle is stopped, engine idling
OIL PRESS WARN	OIL PRESS warning light (OFF / ON)	Confirm that the vehicle is stopped, engine idling
DISCHARGE WARN	CHARGE warning light (OFF/ON)	Confirm that the vehicle is stopped, engine idling
HEADLIGHT INDIC	HEAD indicator light (OFF/ON)	Confirm that the vehicle is stopped, engine idling
TAILLIGHT INDIC	TAIL indicator light (OFF / ON)	Confirm that the vehicle is stopped, engine idling
ABS WARN	ABS warning light (OFF / ON)	Confirm that the vehicle is stopped, engine idling
BRAKE WARN	BRAKE warning light (OFF / ON)	Confirm that the vehicle is stopped, engine idling
VSC WARN (*1)	VSC warning light (OFF / ON)	Confirm that the vehicle is stopped, engine idling
SLIP INDIC (*1)	SLIP indicator light (OFF / ON)	Confirm that the vehicle is stopped, engine idling
CRUISE INDIC	CRUISE indicator light (OFF / ON)	Confirm that the vehicle is stopped, engine idling
LOW WASHER WARN	WASHER warning light (OFF / ON)	Confirm that the vehicle is stopped, engine idling
HIGH BEAM INDIC	BEAM indicator light (OFF / ON)	Confirm that the vehicle is stopped, engine idling
ODO/TRIP DISP	ODO/TRIP DISPLAY (OFF / ON)	Confirm that the vehicle is stopped, engine idling
L-CRUISE DISP (*2)	Laser Cruise DISPLAY indicator light (OFF / ON)	Confirm that the vehicle is stopped, engine idling
L-CRS CHECK IND (*2)	L-CRUISE CHECK indicator light (OFF / ON)	Confirm that the vehicle is stopped, engine idling
L-CRS READY IND (*2)	L-CRUISE READY indicator light (OFF / ON)	Confirm that the vehicle is stopped, engine idling
L-CRS NORM (*2)	L-CRUISE NORMAL indicator light (OFF / ON)	Confirm that the vehicle is stopped, engine idling
SMART KEY (*3)	ELECTRICAL KEY indicator light (OFF / ON)	Confirm that the vehicle is stopped, engine idling
MAINT REQD (*4)	MAINTNANCE indicator light (OFF / ON)	Confirm that the vehicle is stopped, engine idling
A/T SHIFT LCD	A/T shift LCD (L / 2 / 3 / 4) (OFF/ON)	Confirm that the vehicle is stopped, engine idling
SHIFT INDIC	A/T indicator light (P / R / N / D / S) (OFF / ON)	Confirm that the vehicle is stopped, engine idling
KEY REMND BUZZR	Key reminder buzzer (OFF / ON)	Confirm that the vehicle is stopped, engine idling
SEAT BELT BUZZR	Seat Belt buzzer (OFF / ON)	Confirm that the vehicle is stopped, engine idling
S SHFT RJCT BUZ	Sports Shift reject buzzer (OFF / ON)	Confirm that the vehicle is stopped, engine idling
WARNING BUZZER	Warning buzzer (OFF / ON)	Confirm that the vehicle is stopped, engine idling

*1: w/ VSC
*2: w/ Dynamic Laser Cruise Control System
*3: w/ Smart Key System
*4: U.S.A.

ON-VEHICLE INSPECTION

1. INSPECT SPEEDOMETER

(a) Check the operation.

(1) Using a speedometer meter tester, check the speedometer indication according to the table below.

Reference

Chassis dynamometer indication	Acceptable range
20 mph (*1)	20.0 to 23.0 mph
40 mph (*1)	40.0 to 43.5 mph
60 mph (*1)	60.0 to 64.0 mph
80 mph (*1)	80.0 to 84.5 mph
100 mph (*1)	100.0 to 105.0 mph
120 mph (*1)	120.0 to 125.5 mph
140 mph (*1)	140.0 to 146.0 mph
160 mph (*1)	160.0 to 166.5 mph
20 km/h (*2)	(17.5 to 21.5 km/h)
40 km/h (*2)	38.0 to 42.0 km/h
60 km/h (*2)	58.0 to 63.0 km/h
80 km/h (*2)	78.0 to 84.0 km/h
100 km/h (*2)	98.5 to 104.5 km/h
120 km/h (*2)	119.0 to 125.0 km/h
140 km/h (*2)	139.0 to 146.0 km/h
160 km/h (*2)	159.0 to 167.0 km/h
180 km/h (*2)	179.0 to 188.0 km/h
200 km/h (*2)	199.0 to 209.0 km/h
220 km/h (*2)	219.0 to 230.0 km/h
240 km/h (*2)	239.0 to 251.0 km/h

*1: U.S.A.

*2: Canada

NOTICE:

Tire wear, as well as over or under inflation will cause errors.

(2) Check the deviation from the acceptable value of the speedometer indication.

Reference:

Below 0.5 km/h (0.3 mph)

2. INSPECT TACHOMETER

(a) Check operation

(1) Connect the tune-up test tachometer and start the engine.

NOTICE:

- **Reversing the connection of the tachometer will damage the transistors and the insides of the diodes.**
- **When removing or installing the tachometer, be careful not to drop or subject it to heavy shocks.**

(2) Compare the result of the test with the standard indication.

DC 13.5 V, at 25°C (77°F)

Reference

Chassis dynamometer indication (r/min)	Acceptable range (r/min) Data in ( ) are for reference
700	630 to 770
1,000	(900 to 1,100)
2,000	(1,850 to 2,150)
3,000	2,800 to 3,200
4,000	(3,800 to 4,200)
5,000	4,800 to 5,200
6,000	(5,750 to 6,250)
7,000	6,700 to 7,300

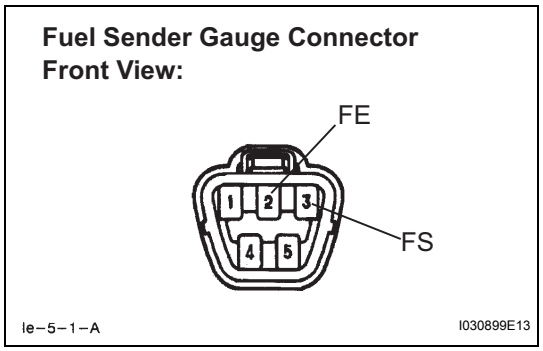

3. INSPECT FUEL RECEIVER GAUGE

(a) Disconnect the connector from the sender gauge.

(b) Turn the ignition switch on (IG), then check the position of the receiver gauge needle.

OK:

Needle position is on (EMPTY).

(c) Connect terminals 2 and 3 on the wire harness side connector of the fuel sender gauge.

(d) Turn the ignition switch on (IG), then check the position of the receiver gauge needle.

OK:

Needle position is on (FULL).

4. INSPECT FUEL LEVEL WARNING LIGHT

(a) Disconnect the connector from the sender gauge.

(b) Turn the ignition switch on (IG), then check that the fuel level needle indicates EMPTY and the fuel level warning light comes on.

OK:

Fuel level warning light comes on.

5. INSPECT LOW ENGINE OIL PRESSURE WARNING LIGHT

(a) Disconnect the connector from the low oil pressure switch.

(b) Turn the ignition switch on (IG).

(c) Ground the terminal of the wire harness side connector, then check the low oil pressure warning light.

OK:

Low engine oil pressure warning light comes on.

6. INSPECT BRAKE WARNING LIGHT

(a) Inspect the parking brake warning light.

(1) Disconnect the connector from the parking brake switch.

(2) Turn the ignition switch on (IG).

(3) Ground the terminal of the wire harness side connector, then check the parking brake warning light.

OK:

Brake warning light comes on.

ME

(b) Inspect the brake fluid level warning light.
(1) Disconnect the connector from the brake fluid level warning switch.
(2) Turn the ignition switch on (IG).
(3) Connect a terminal to the other terminal of the wire harness side connector, then check the brake fluid level warning switch.
OK:
Brake warning light comes on.

7. INSPECT BRAKE FLUID LEVEL WARNING SWITCH

(a) Remove the reservoir tank cap and strainer.
(b) Disconnect the connector.
(c) Measure the resistance between the terminals.
Resistance:
Float up (switch off): 10 kΩ or higher
(d) Use a syphon, etc. to take fluid out of the reservoir tank.
(e) Measure the resistance between the terminals.
Resistance:
Float down (switch on): Below 1 Ω
(f) Pour the fluid back in the reservoir tank.

8. OIL MAINTENANCE INDICATOR RESETTING PROCEDURE

Indicator Condition:

State	Condition	Specified State
Blinking	The vehicle runs 4,500 to 5,000 miles after the previous setting	The indicator blinks for 12 seconds after the ignition switch is on (IG) (including 3 seconds for a bulb check)
Continuously Illuminated	The vehicle runs over 5,000 miles after the previous setting	The indicator is continuously illuminated after the ignition switch is on (IG).

(a) Set the display window to ODO.
(b) Turn the ignition switch off.
(c) While pressing the reset switch, turn the ignition switch on (IG). Keep pressing the reset switch for at least 5 seconds to complete the reset procedure. Check that the "MAINTENANCE" indicator light goes off.
HINT:
- If the ignition switch is turned off during the reset procedure:
  LCD: off
  IND: off
- If the reset switch is not pressed for at least 5 seconds during the reset procedure:
  LCD: return to ODO
  IND: previous state

Entire Combination Meter does not Operate

WIRING DIAGRAM

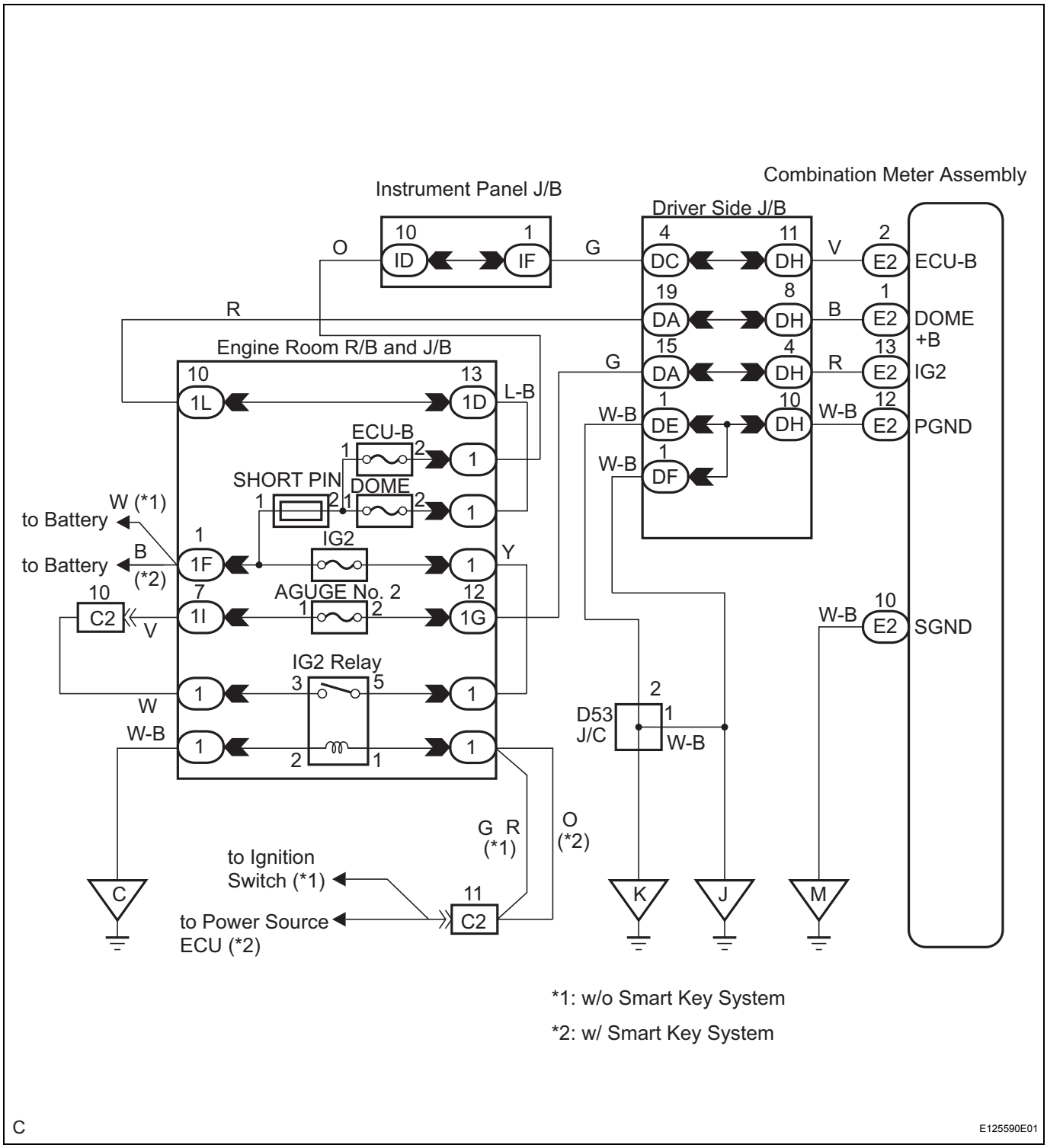

C

INSPECTION PROCEDURE

1	INSPECT COMBINATION METER ASSEMBLY

Combination Meter Assembly Wire Harness View:

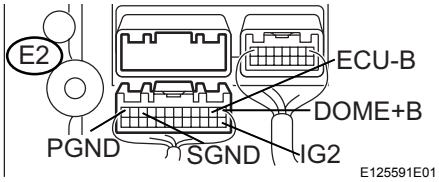

(a) Disconnect the E2 connector.
(b) Measure the resistance according to the value(s) in the table below.

Resistance

Tester Connection	Condition	Specified Condition
E2-12 (PGND) - Body ground	Always	Below 1 Ω
E2-10 (SGND) - Body ground	Always	Below 1 Ω

(c) Measure the voltage according to the value(s) in the table below.

Resistance

Tester Connection	Condition	Specified Condition
E2-1 (DOME+B) - Body ground	Always	10 to 14 V
E2-2 (ECU-B) - Body ground	Always	10 to 14 V
E2-13 (IG2) - Body ground	Ignition switch on (IG)	10 to 14 V

NG → **REPAIR OR REPLACE HARNESS OR CONNECTOR**

OK

REPLACE COMBINATION METER ASSEMBLY

ME

Speedometer Malfunction

WIRING DIAGRAM

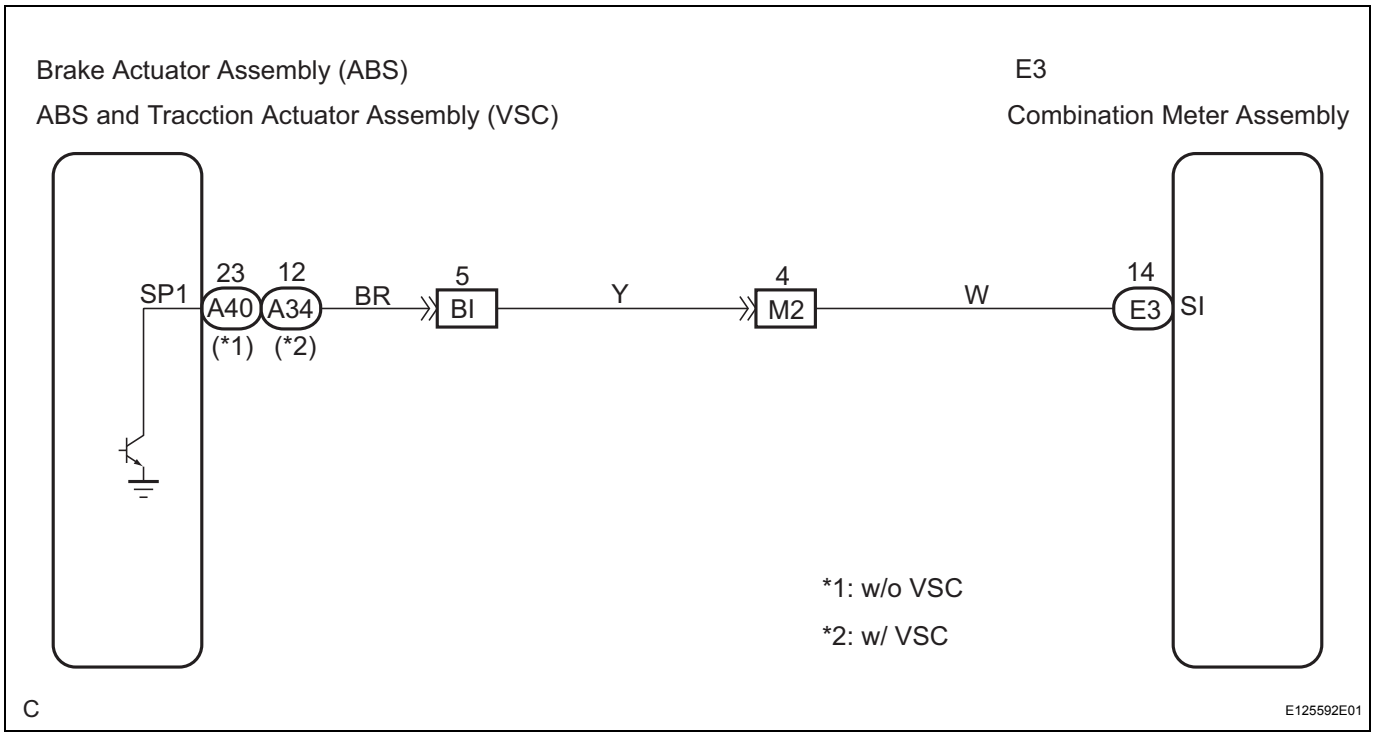

INSPECTION PROCEDURE

1	PERFORM ACTIVE TEST BY INTELLIGENT TESTER

(a) Operate the intelligent tester according to the steps on the display and select the "ACTIVE TEST".

METER:

Item	Test Details	Diagnostic Note
SPEED METER	0 /40 (24) / 80 (48) / 120 (72) / 160 (96) / 200 (120) / 240 (149) km/m (mph)	-

OK:
Needle indication is normal.

NG → **REPLACE COMBINATION METER ASSEMBLY**

OK

2	READ VALUE OF INTELLIGENT TESTER (VEHICLE SPEED SIGNAL)

(a) Operate the intelligent tester according to the steps on the display and select the "DATA LIST".

METER:

Item	Measurement Item / Range (Display)	Test Details	Diagnostic Note
SPEED METER	Vehicle speed / Min.: 0 km/h (0 mph), Max.: 255 km/h (158 mph)	Almost same as actual speed (When driving)	-

OK:
Vehicle speed displayed on the tester is almost the same as the actual vehicle speed.

NG → **Go to step 3**

OK

REPLACE COMBINATION METER ASSEMBLY

3 **READ VALUE OF INTELLIGENT TESTER (VEHICLE SPEED SIGNAL)**

(a) Operate the intelligent tester according to the steps on the display and select the "DATA LIST".

ABS:

Item	Measurement Item / Range (Display)	Test Details	Diagnostic Note
(FR / FL / RR / RL) SPD	Vehicle speed / Min.: 0 km/h (0 mph), Max.: 326 km/h (202 mph)	Almost same as actual speed (When driving)	-

OK:
Vehicle speed displayed on the tester is almost the same as the actual vehicle speed.

NG → **GO TO BRAKE CONTROL SYSTEM**

OK

4 **INSPECT COMBINATION METER ASSEMBLY**

(a) Check the input signal waveform.
(1) Remove the combination meter assembly.
(2) Connect the oscilloscope to the terminals E3-14 (IS) and body ground.
(3) Start the engine.

Combination Meter Assembly Wire Harness View:

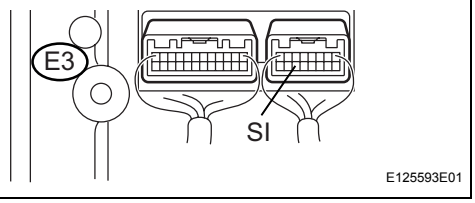

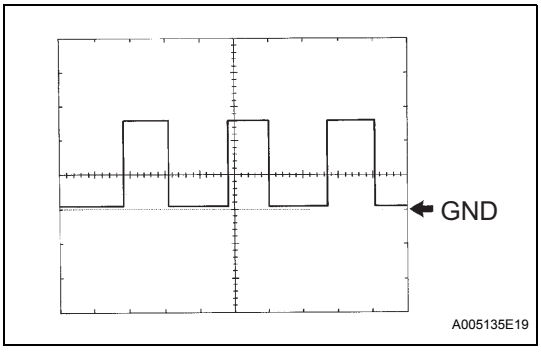

(4) Check the signal waveform according to the condition(s) in the table below.
OK:
The waveform is displayed as shown in the illustration.

Item	Condition
Tool setting	5 V/DIV., 20 ms/DIV.
Vehicle condition	Driving at approx. 20 km/h (12 mph)

HINT:
As the vehicle speed increases, the cycle of the signal waveform narrows.

NG → **Go to step 5**

OK

REPLACE COMBINATION METER ASSEMBLY

5 **CHECK HARNESS AND CONNECTOR (ABS AND TRACTION ACTUATOR ASSEMBLY (VSC) - COMBINATION METER)**

Combination Meter Assembly Wire Harness View:

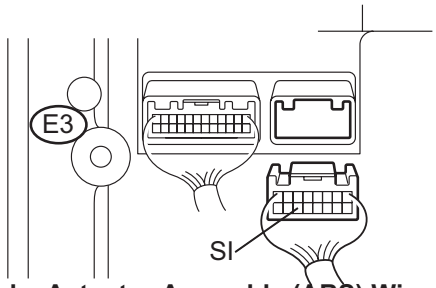

Brake Actuator Assembly (ABS) Wire Harness View:
w/o VSC:

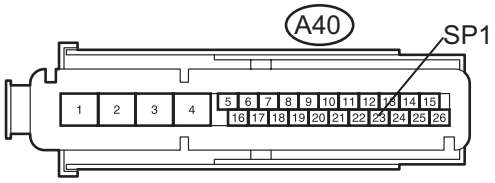

ABS and Traction Actuator Assembly (VSC) Wire Harness View:
w/ VSC:

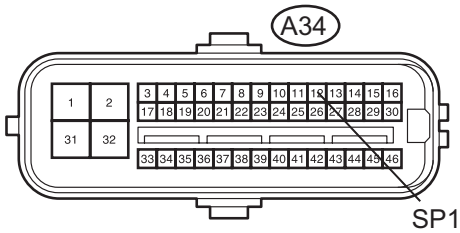

N

E125594E01

(a) Disconnect the E3 and A34 (A40) connectors.
(b) Measure the resistance according to the value(s) in the table below.

Resistance

Tester Connection	Condition	Specified Condition
E3-14 (SI) - A34-12 (SP1) (*2)	Always	Below 1 Ω
E3-14 (SI) - A40-23 (SP1) (*1)	Always	Below 1 Ω
E3-14 (SI) - Body ground	Always	10 kΩ or higher

(*1): w/o VSC
(*2): w/ VSC

NG → **REPAIR OR REPLACE HARNESS OR CONNECTOR**

OK

ME

6	INSPECT COMBINATION METER ASSEMBLY

Brake Actuator Assembly (ABS) Wire Harness View:
w/o VSC

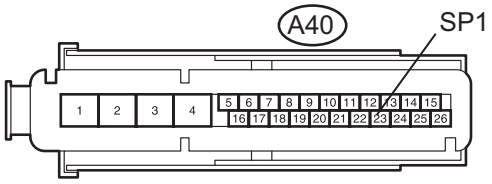

ABS and Traction Actuator Assembly (VSC) Wire Harness View:
w/ VSC

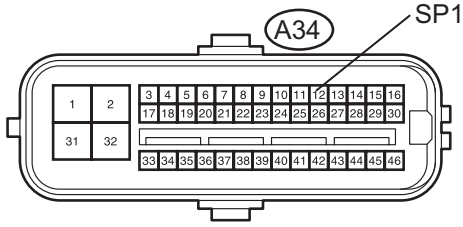

N E125595E01

(a) Disconnect the A34 (A40) connector.
(b) Measure the voltage according to the value(s) in the table below.

Voltage

Tester Connection	Condition	Specified Condition
A34-12 (SP1) (*2) - Body ground	Ignition switch on (IG)	10 to 14 V
A40-23 (SP1) (*1) - Body ground	Ignition switch on (IG)	10 to 14 V

(*1): w/o VSC
(*2): w/ VSC

NG → **REPLACE COMBINATION METER ASSEMBLY**

OK

GO TO BRAKE CONTROL SYSTEM

ME

Tachometer Malfunction

WIRING DIAGRAM

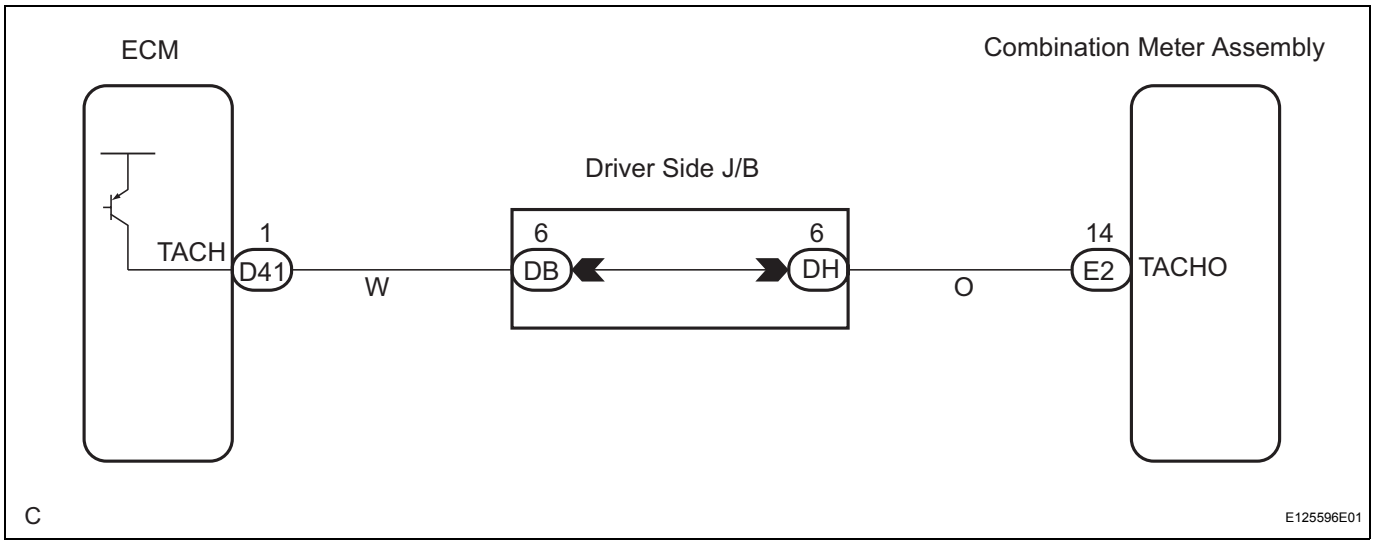

ME

INSPECTION PROCEDURE

1	PERFORM ACTIVE TEST BY ACTIVE TEST USING INTELLIGENT TESTER

(a) Operate the intelligent tester according to the steps on the display and select the "ACTIVE TEST".

METER:

Item	Test Details	Diagnostic Note
TACHOMETER	0 rpm / 1,000 rpm / 2,000 rpm / 3,000 rpm / 4,000 rpm / 5,000 rpm / 6,000 rpm / 7,000 rpm	-

OK:
Needle indication is normal.

NG → **REPLACE COMBINATION METER ASSEMBLY**

OK

2	READ VALUE OF INTELLIGENT TESTER (ENGINE SPEED SIGNAL)

(a) Operate the intelligent tester according to the steps on the display and select the "DATA LIST".

METER:

Item	Measurement Item / Display (Range)	Normal Condition	Diagnostic Note
TACHO METER	Engine speed / min.: 0 rpm, Max.: 12,750 rpm	Almost same as actual engine speed (When engine is running)	-

OK:
Engine speed displayed on the tester is almost the same as the actual engine speed.

NG → **Go to step 3**

OK

REPLACE COMBINATION METER ASSEMBLY

3	READ VALUE OF INTELLIGENT TESTER (ENGINE SPEED SIGNAL)

(a) Operate the intelligent tester according to the steps on the display and select the "DATA LIST".

ENGINE:

Item	Measurement Item / Display (Range)	Normal Condition	Diagnostic Note
ENGINE SPD	Engine speed / min.: 0 rpm, Max.: 16,383 rpm	Almost same as actual engine speed (When engine is running)	-

OK:

Engine speed displayed on the tester is almost the same as the actual engine speed.

NG → **GO TO ENGINE CONTROL SYSTEM**

OK

4	INSPECT COMBINATION METER ASSEMBLY

(a) Check the input signal waveform.
(1) Remove the combination meter assembly.
(2) Connect the oscilloscope to the terminals E2-14 (TACHO) and body ground.
(3) Start the engine.

Combination Meter Assembly Wire Harness View:

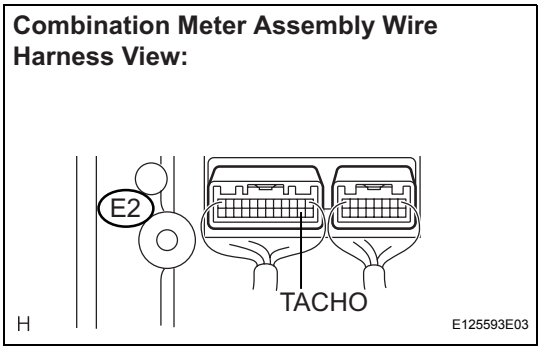

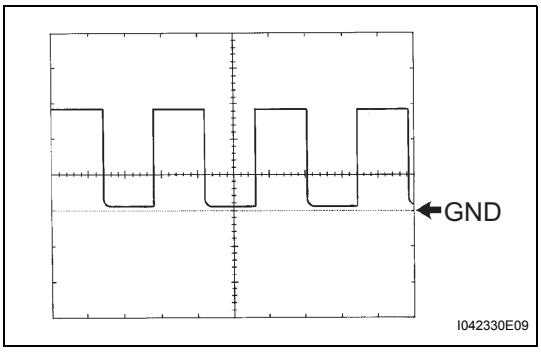

(4) Check the signal waveform according to the condition(s) in the table below.

Item	Condition
Tool setting	5 V/DIV., 10 ms/DIV.
Vehicle condition	Engine idle speed

OK:

The waveform is displayed as shown in the illustration.

NG → **Go to step 5**

OK

REPLACE COMBINATION METER ASSEMBLY

5 CHECK HARNESS OR CONNECTOR (ECM - COMBINATION METER)

Combination Meter Assembly Wire Harness View:

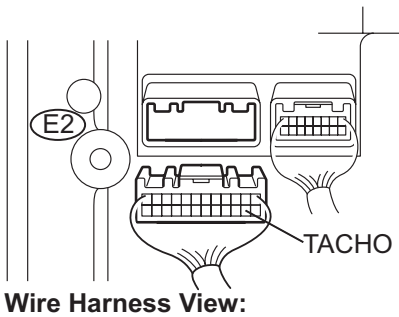

ECM Wire Harness View:

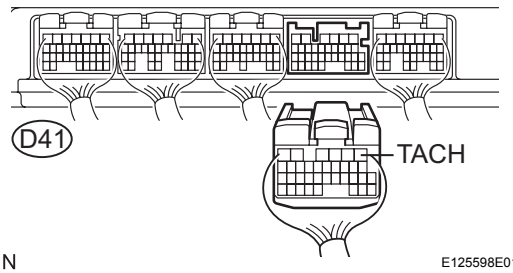

N E125598E01

(a) Disconnect the E2 and D41 connectors.
(b) Measure the resistance according to the value(s) in the table below.

Resistance

Tester Connection (Symbols)	Condition	Specified Condition
E2-14 (TACHO) - D41-1 (TACH)	Always	Below 1 Ω
E2-14 (TACHO) - Body ground	Always	10 kΩ or higher

NG → **REPAIR OR REPLACE HARNESS OR CONNECTOR**

OK

GO TO ENGINE CONTROL SYSTEM

ME

Fuel Receiver Gauge Malfunction

WIRING DIAGRAM

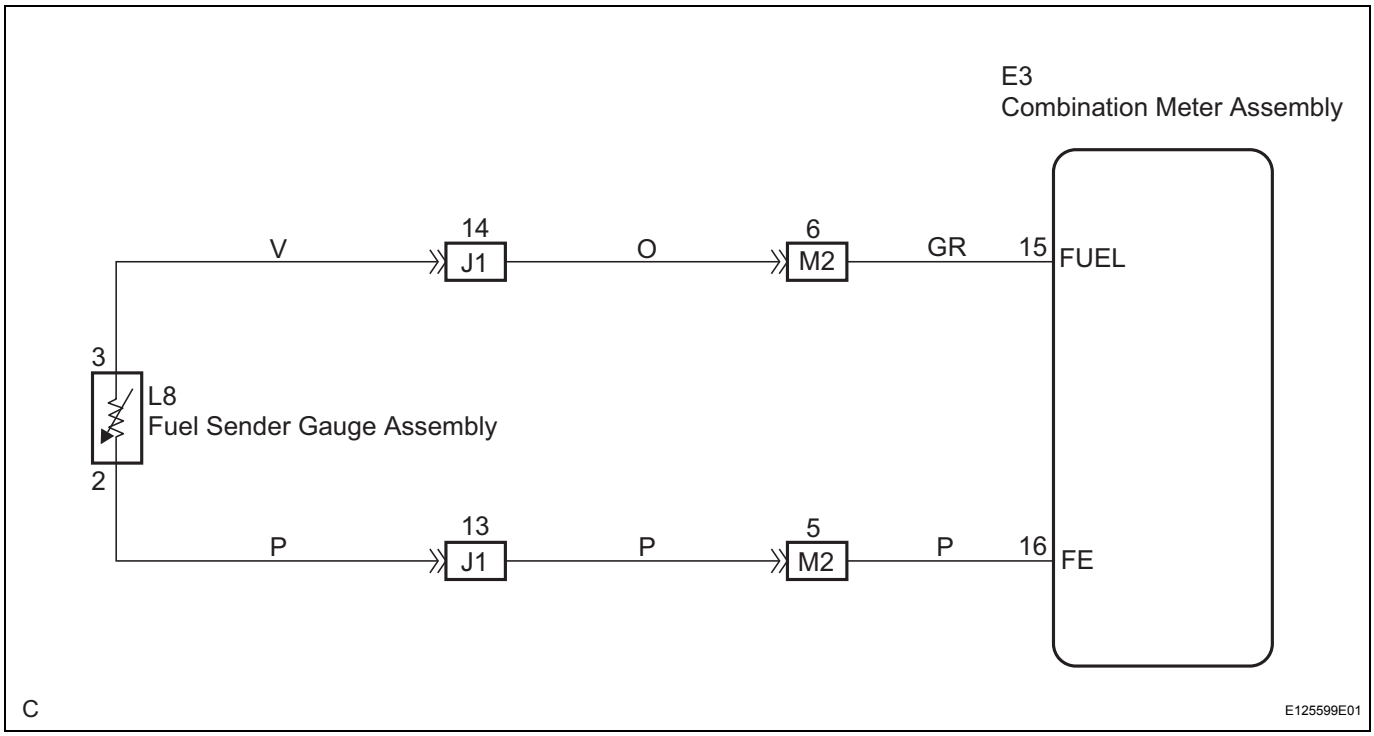

ME

INSPECTION PROCEDURE

1	PERFORM ACTIVE TEST BY INTELLIGENT TESTER

(a) Operate the intelligent tester according to the stepson the display and select the "ACTIVE TEST".

METER:

Item	Test Details	Diagnostic Note
FUEL GAUGE	OFF, EMPTY, 1/2, FULL	-

OK:

Needle indication is normal.

NG → **REPLACE COMBINATION METER ASSEMBLY**

OK

2	READ VALUE OF INTELLIGENT TESTER

(a) Operate the intelligent tester according to the steps on the display and select the "DATA LIST".

METER:

Item	Measurement Item / Display (Range)	Normal Condition	Diagnostic Note
FUEL GAUGE	Fuel input signal Min.: 0, max.: 255	Fuel gauge indicates (F): 35 Fuel gauge indicates (3/4): 85 Fuel gauge indicates (1/2): 145 Fuel gauge indicates (1/4): 186 Fuel gauge indicates (E): 205	-

OK:

Fuel value signal displayed on the tester is almost the same as needle indication.

NG → **REPLACE COMBINATION METER ASSEMBLY**

OK

3	INSPECT FUEL SENDER GAUGE ASSEMBLY

Fuel Sender Gauge Connector Front View:

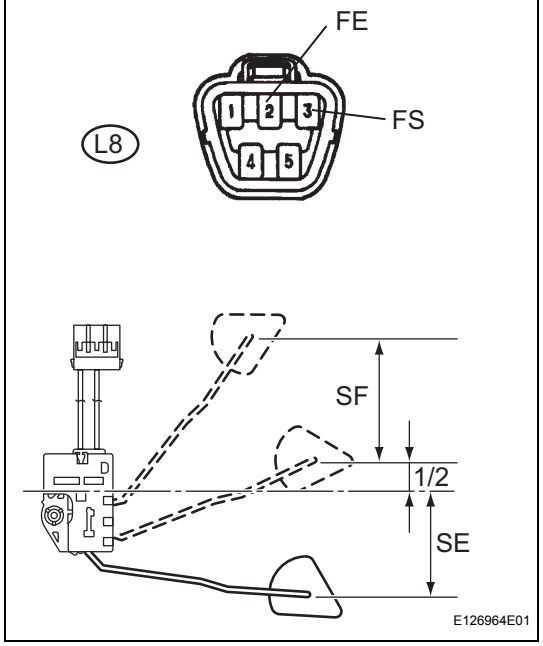

(a) Disconnect the L8 connector.
(b) Disconnect the fuel sender gauge connector.
(c) Remove the fuel sender gauge assembly.
(d) Measure the resistance between the terminal 2 (EF) and 3 (FS) of connector according to the value(s) in the table below

Resistance

Float level	Float position mm (in.)	Resistance (Ω)
SF	73.1 (2.88) +- 3 (0.12)	13.5 to 16.5
1/2	13.8 (0.54) +- 3 (0.12)	199.5 to 225.5
SE	51.5 (2.03) +- 3 (0.12)	405.5 to 414.5

NG → **REPLACE FUEL SENDER GAUGE ASSEMBLY**

OK

ME

4	CHECK HARNESS AND CONNECTOR (COMBINATION METER - FUEL SENDER GAUGE ASSEMBLY)

Combination Meter Assembly Wire Harness View:

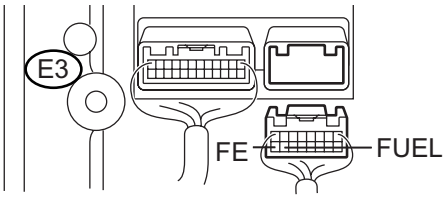

Fuel Sender Gauge Assembly Wire Harness View:

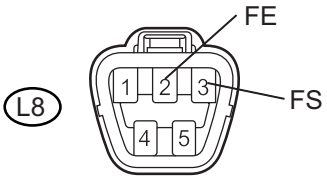

H

E125601E01

(a) Disconnect the E3 and L8 connectors
(b) Measure the resistance according to the value(s) in the table below.

Resistance

Tester Connection	Condition	Specified Condition
E3-15 (FUEL) - L8-3 (FS)	Always	Below 1 Ω
E3-15 (FUEL) - Body ground	Always	10 kΩ or higher
E3-16 (FE) - L8-2 (FE)	Always	Below 1 Ω
E3-16 (FE) - Body ground	Always	10 kΩ or higher

NG → **REPAIR OR REPLACE HARNESS OR CONNECTOR**

OK

REPLACE COMBINATION METER ASSEMBLY

Engine Coolant Temperature Receiver Gauge Malfunction

WIRING DIAGRAM

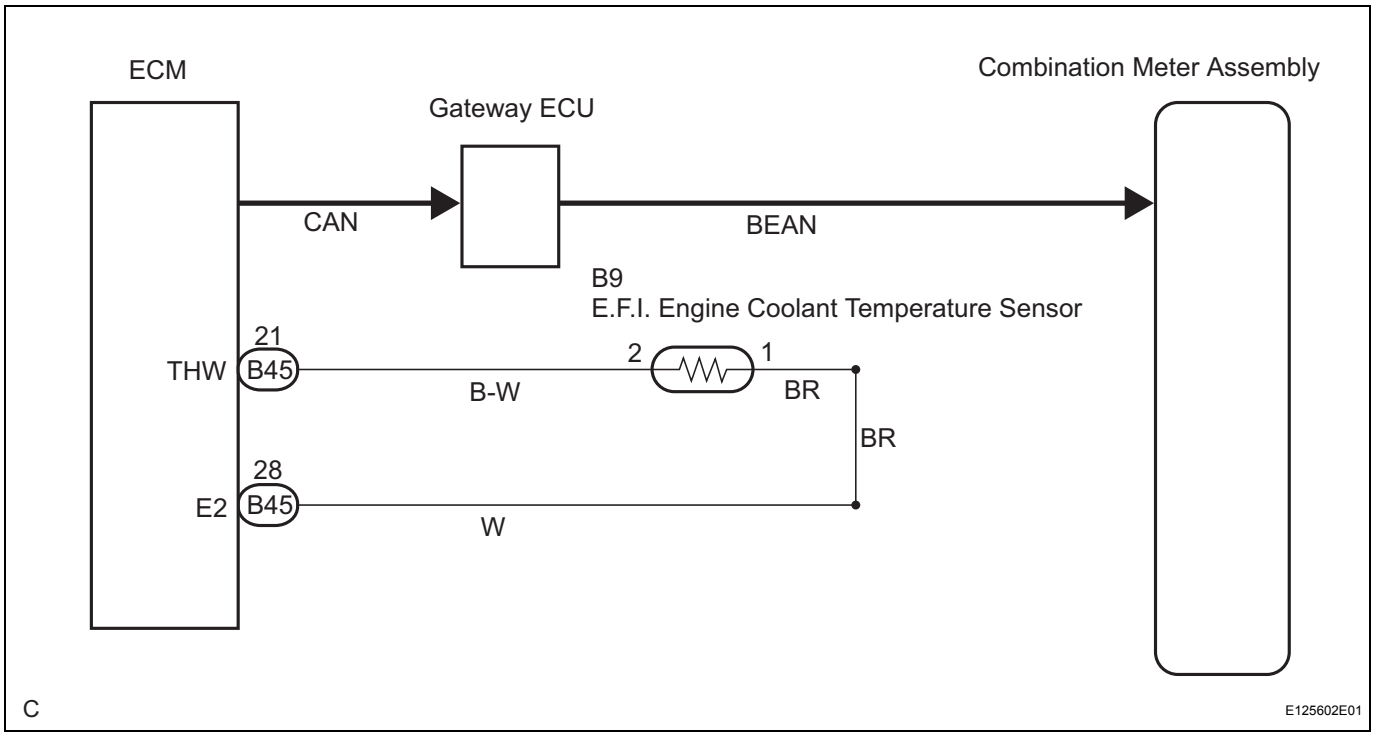

INSPECTION PROCEDURE

HINT:
If there is an open or short in the engine coolant temperature sensor circuit, the ECM outputs DTCs.
Perform troubleshooting with the "SFI System" (See page ES-44).

1	PERFORM ACTIVE TEST BY INTELLIGENT TESTER

(a) Operate the intelligent tester according to the steps on the display and select the "ACTIVE TEST".

METER:

Item	Test Details	Diagnostic Note
COOLANT TEMP	LOW / NORMAL / HI	-

OK:
Needle indication is normal.

NG → **REPLACE COMBINATION METER ASSEMBLY**

OK

2	READ VALUE OF INTELLIGENT TESTER (ENGINE COOLANT)

(a) Operate the intelligent tester according to the steps on the display and select the "DATA LIST".

ENGINE:

Item	Measurement Item / Display (Range)	Normal Condition	Diagnostic Note
COOLANT TEMP	Coolant Temperature / Min.: -40°C (-40°F), Max.: 140°C (284°F)	After warming up: 80 to 95°C (176 to 203°F)	If the value is "-40°C (-40°F)" or "140°C (284°F)", sensor circuit is open or shorted.

OK:
Coolant temperature displayed on the tester is between 80°C (176°F) and 95°C (203°F) after warming up.

NG → **GO TO ENGINE CONTROL SYSTEM**

OK

3	REPLACE COMBINATION METER ASSEMBLY

OK:
Operation of combination returns to normal.

NG → **GO TO ENGINE CONTROL SYSTEM**

OK

END

Driver Side Seat Belt Warning Light does not Operate

WIRING DIAGRAM

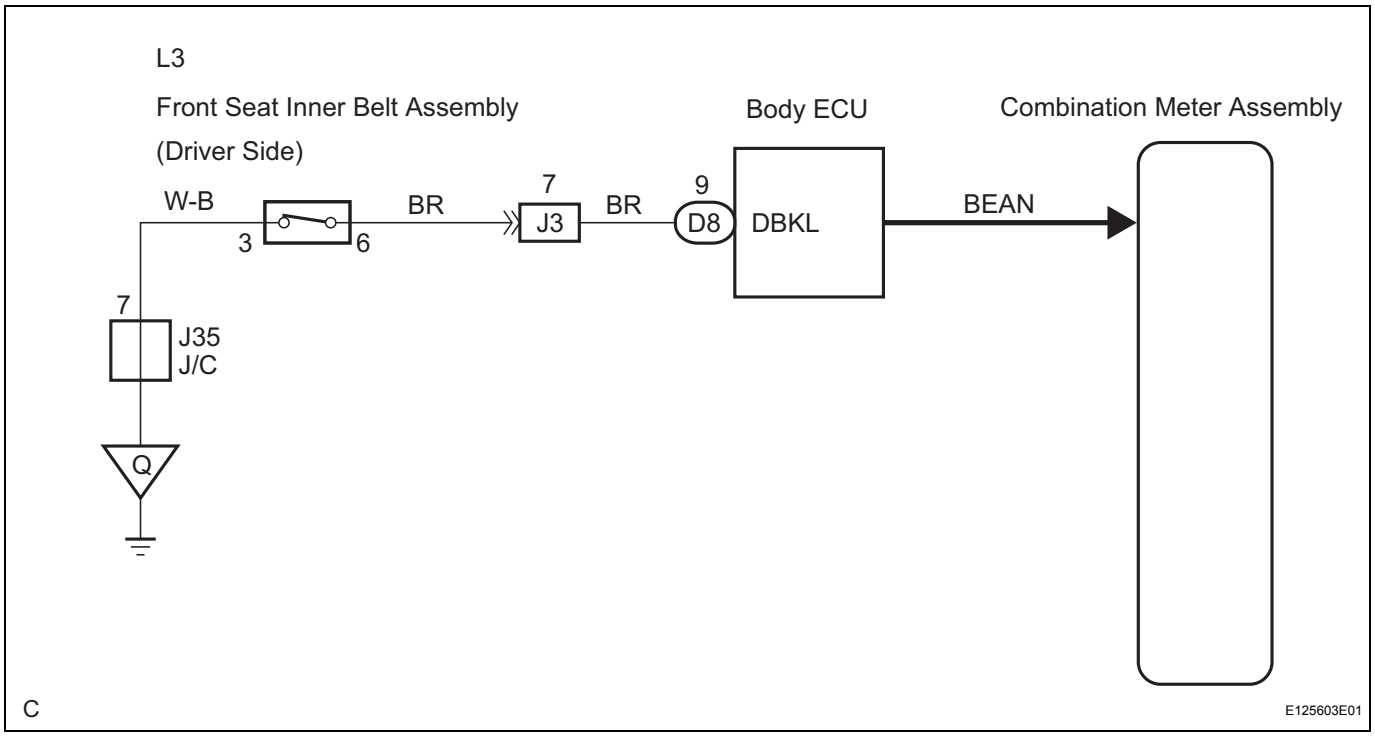

INSPECTION PROCEDURE

HINT:
If there is an open in the ground circuit (Airbag sensor assembly center), the airbag sensor assembly center outputs DTCs. Perform troubleshooting with the "Supplemental Restraint System" (See page RS-34).

1	PERFORM ACTIVE TEST BY INTELLIGENT TESTER

(a) Operate the intelligent tester according to the steps on the display and select the "ACTIVE TEST".

METER:

Item	Test Details	Diagnostic Note
D-BELT REMIND	Indicat. Light D-SEAT BELT (OFF / ON)	Confirm that the vehicle is stopped and engine idling

OK:
Indicator light (ON OFF) can be switched ACTIVE TEST.

NG → **REPLACE COMBINATION METER ASSEMBLY**

OK

2	READ VALUE OF INTELLIGENT TESTER

(a) Operate the intelligent tester according to the steps on the display and select the "DATA LIST".

DATA LIST / AIR CONDITIONER:

Item	Measurement Item / Display (Range)	Normal Condition	Diagnostic Note
D BUCKLE SW	Driver seat belt buckle switch ON / OFF	ON: Seat belt is fastened OFF: seat belt is unfastened	-

OK:
Switch condition (ON / OFF) can be switched by actual operation.

NG → **REPLACE COMBINATION METER ASSEMBLY**

OK

ME

3	INSPECT FRONT SEAT INNER BELT ASSEMBLY LH (DRIVER SIDE)

Front Seat Inner Belt Assembly (Driver Side) Connector Front View:

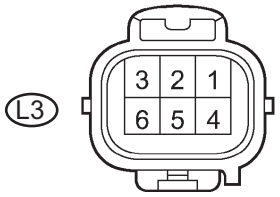

I040135E02

(a) Disconnect the connector from the front seat inner belt assembly (Driver Side).
(b) Measure the resistance according to the value(s) in the table below.
Resistance

Tester Connection	Condition	Specified Condition
L3-6 - L3-3	Seat belt is fastened	Approx. 330 Ω
L3-6 - L3-3	seat belt is unfastened	Approx. 1,330 Ω

NG → **REPLACE FRONT SEAT INNER BELT ASSEMBLY LH (DRIVER SIDE)**

OK

4	CHECK HARNESS OR CONNECTOR (BODY ECU - FRONT SEAT INNER BELT ASSEMBLY (DRIVER SIDE))

Front Seat Inner Belt Assembly (Driver Side) Wire Harness View:

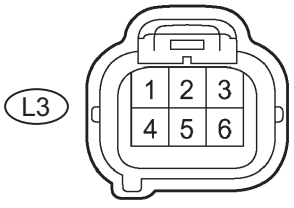

H

E058133E03

(a) Disconnect the connector from the front seat inner belt assembly (Driver Side).
(b) Measure the resistance according to the value(s) in the table below.
Resistance

Tester Connection	Condition	Specified Condition
L3-3 - Body ground	Always	Below 1 Ω

NG → **REPAIR OR REPLACE HARNESS OR CONNECTOR**

OK

GO TO MULTIPLEX COMMUNICATION SYSTEM

Front Passenger Side Seat Belt Warning Light Malfunction

WIRING DIAGRAM

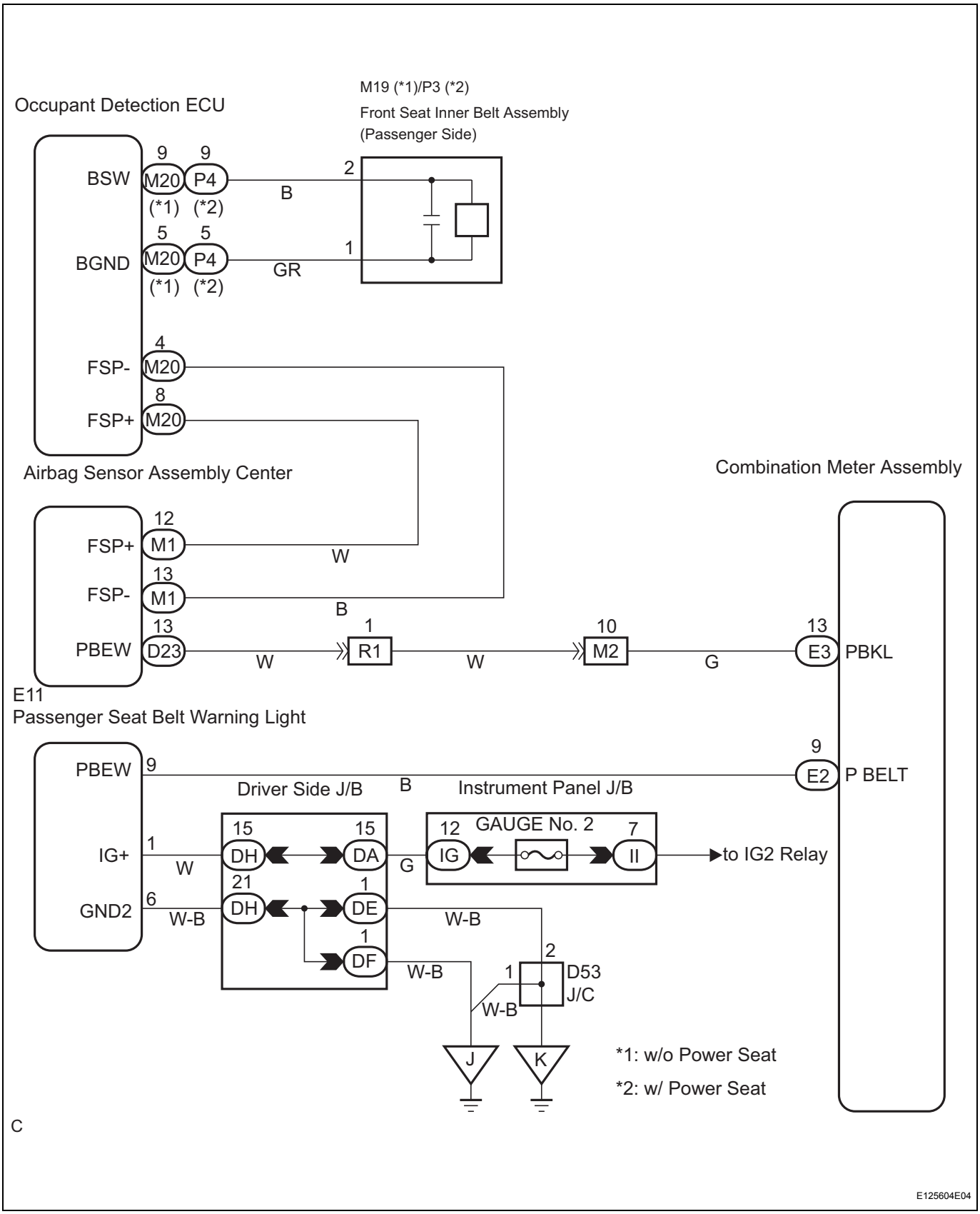

INSPECTION PROCEDURE

HINT:

- Displays except for the seat belt warning indicator are shown in the navigation system (See page NS-24), supplemental restraint system (See page RS-26), and A/C system (See page AC-29).
- The passenger seat belt warning light can be inspected with it removed from the vehicle. The accessory meter assembly should be replaced if the passenger seat belt warning light has a malfunction because this part is not independently supplied.

1	PERFORM ACTIVE TEST BY INTELLIGENT TESTER

(a) Operate the intelligent tester according to the steps on the display and select the "ACTIVE TEST".

DATA LIST / AIR CONDITIONER:

Item	Test Details	Diagnostic Note
P-BELT REMIND	Indicat. Light P-SEAT BELT (OFF / ON)	Confirm that the vehicle is stopped, engine idling

OK:
Indicator light (ON / OFF) can be switched by ACTIVE TEST.

OK → **Go to step 5**

NG

2	CHECK HARNESS AND CONNECTOR (BETWEEN PASSENGER SEAT BELT WARNING LIGHT AND COMBINATION ME)

Combination Meter Assembly Wire Harness View:

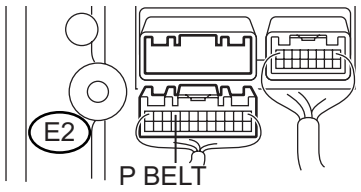

Passenger Seat Belt Warning Light Wire Harness View:

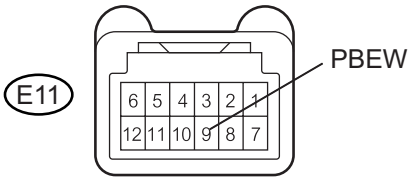

H E125605E01

(a) Disconnect the E2 and E11 connectors.
(b) Measure the resistance to the value(s) in the table blow.
Resistance

Tester Connection	Condition	Specified Condition
AE2-9 (P BEL) - E11-9 (PBEW)	Always	Below 1 Ω
E11-9 (PBEW) - Body ground	Always	10 kΩ or higher

NG → **REPAIR OR REPLACE HARNESS OR CONNECTOR**

OK

3	INSPECT COMBINATION METER ASSEMBLY

Passenger Seat Belt Warning Light Wire Harness View:

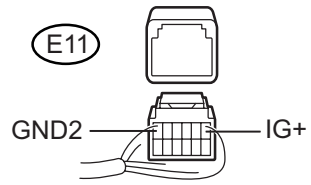

(a) Disconnect the E2 connector
(b) Measure the voltage according the value(s) in the table below.
Voltage

Tester Connection	Condition	Specified Condition
E11-1 (IG+) - Body ground	Ignition switch on (IG)	10 to 14 V

OK → **REPLACE COMBINATION METER ASSEMBLY**

NG

4	CHECK WIRE HARNESS AND CONNECTOR (PASSENGER SEAT BELT WARNING CIRCUIT)

Passenger Seat Belt Warning Light Wire Harness View:

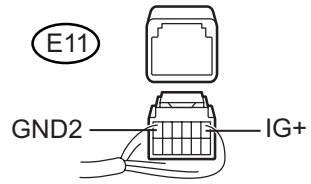

(a) Disconnect the E2 connector
(b) Measure the voltage according the value(s) in the table below.
Voltage

Tester Connection	Condition	Specified Condition
E11-1 (IG+) - Body ground	Ignition switch on (IG)	10 to 14 V

(c) Measure the resistance according to the value(s) in the table below.
Resistance

Tester Connection	Condition	Specified Condition
E11-6 (GND2) - Body ground	Always	Below 1 Ω

NG → **REPAIR OR REPLACE HARNESS OR CONNECTOR**

OK

REPLACE ACCESSORY METER ASSEMBLY

5	READ VALUE OF INTELLIGENT TESTER

(a) Operate the intelligent tester according to the step on the display and select "DATA LIST".

SRS AIRBAG:

Item	Measurement Item / Display (Range)	Normal Condition	Diagnostic Note
P BUCKLE SW	Passenger seat belt buckle switch is ON / OFF	ON: Seat belt is fastened OFF: Seat belt is unfastened	-

OK:
Switch condition (ON / OFF) can be switched by actual operation.

NG → **GO TO SUPPLEMENTAL RESTRAINT SYSTEM**

OK

6 CHECK HARNESS AND CONNECTOR (AIRBAG SENSOR ASSEMBLY CENTER - COMBINATION METER)

Airbag Sensor Assembly Center Wire Harness View:

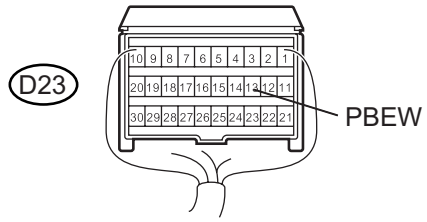

Combination Meter Assembly Wire Harness View:

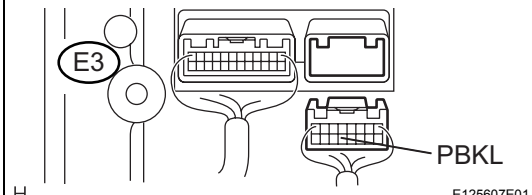

(a) Disconnect the D23 and E3 connectors.
(b) Measure the resistance according to the value(s) in the table below.

Resistance

Tester Connection	Condition	Specified Condition
D23-13 (PBEW) - E3-13 (PBKL)	Always	Below 1 Ω
E3-13 (PBKL) - Body ground	Always	10 kΩ or higher

NG → **REPAIR OR REPLACE HARNESS OR CONNECTOR**

OK

7 INSPECT COMBINATION METER ASSEMBLY

Airbag Sensor Assembly Center Wire Harness View:

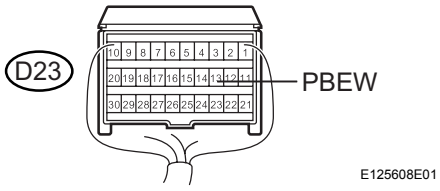

(a) Disconnect the D23 connector.
(b) Measure the voltage according to the value(s) in the table below.

Voltage

Tester Connection	Condition	Specified Condition
D23-13 (PBEW) - Body ground	Ignition switch on (IG)	10 to 14 V

NG → **REPLACE COMBINATION METER ASSEMBLY**

OK

REPLACE CENTER AIRBAG SENSOR ASSEMBLY

Operating Light Control Rheostat does not Change Light Brightness

WIRING DIAGRAM

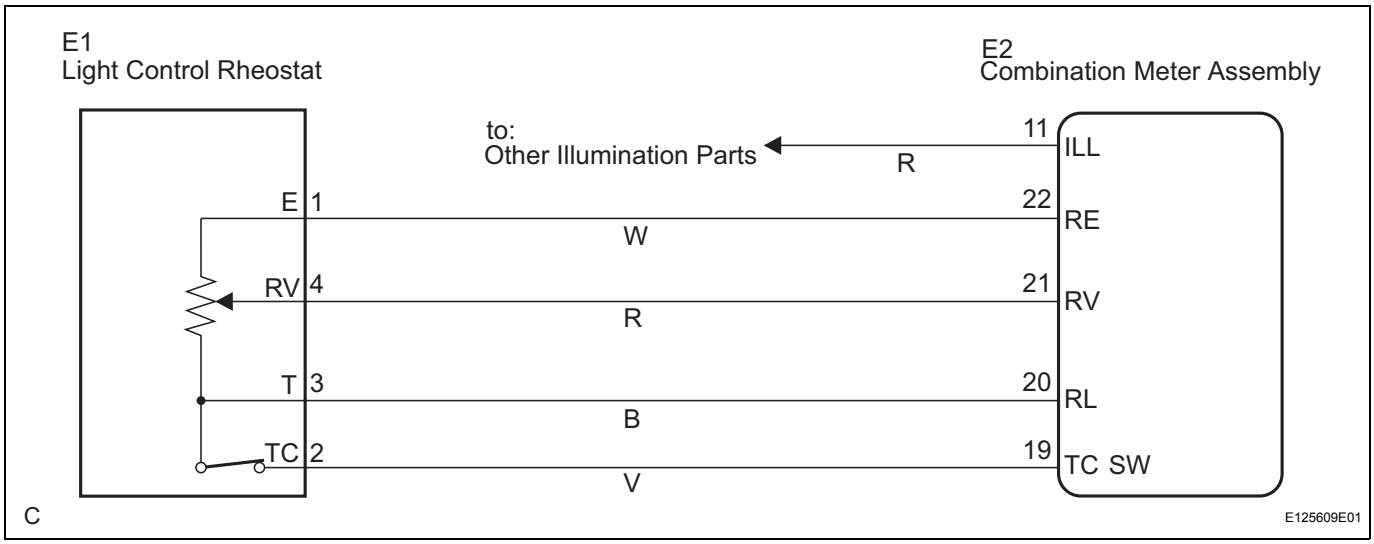

ME

INSPECTION PROCEDURE

1	READ VALUE OF INTELLIGENT TESTER (LIGHT CONTROL RHEOSTAT)

(a) Operate the intelligent tester according to the steps on the display and select the "DATA LIST".

METER:

Item	Measurement Item / Display (Range)	Normal Condition	Diagnostic Note
RHEOSTAT VOL	Light control Rheostat / Min.: 0 , Max.: 255	Light control rheostat rheostat switch is Dark (0) → Bright (255)	-

OK:

Light control can be changed within the specified range by actual operation.

NG → **Go to step 5**

OK

2	CHECK ILLUMINATION

OK

Result	Proceed to
All illumination does not change.	A
Only combination meter illumination does not change.	A
Lounge illumination / Push start button illumination does not change.	B
Other illumination (navigation, audio, etc.) does not change.	C

B → **Go to step 3**

C → Go to step 4

A

REPLACE COMBINATION METER ASSEMBLY

3 REPLACE BODY ECU

HINT:
Check illumination circuit before replacing body ECU (See page LI-18).

OK:

Operation of the light control rheostat returns to normal.

NG → **REPLACE COMBINATION METER ASSEMBLY**

OK

END

4 INSPECT COMBINATION METER ASSEMBLY

Combination Meter Assembly Wire Harness View:

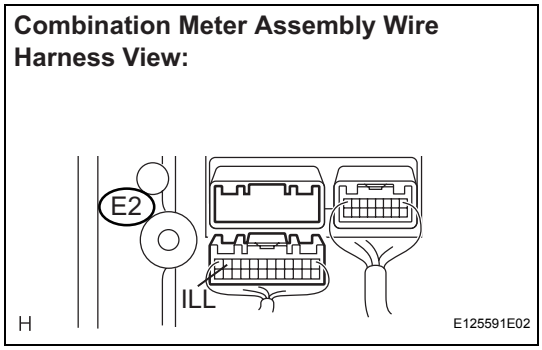

(a) Disconnect the E2 connector.
(b) Measure the voltage according to the value(s) in the table below.

Voltage

Tester Connection	Condition	Specified Condition
E2-11 (ILL) - Body ground	Ignition switch on (IG), and TAIL light ON	10 to 14 V
E2-11 (ILL) - Body ground	Ignition switch off	Below 1 V

NG → **REPLACE COMBINATION METER ASSEMBLY**

OK

CHECK ILLUMINATION

5	INSPECT LIGHT CONTROL RHEOSTAT

Light Control Rheostat Wire Harness View:

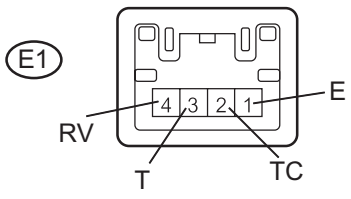

(a) Remove the light control rheostat.
(b) Measure the resistance according to the value(s) in the table below.

Resistance

Tester Connection	Condition	Specified Condition
E1-1 (E) - E1-4 (RV)	Rheostat knob fully turns clockwise.	8 to 12 Ω
E1-1 (E) - E1-4 (RV)	Rheostat knob fully turns counterclockwise.	Approx. 0 Ω
E1-2 (TC) - E1-3 (T)	Rheostat knob fully turns clockwise.	Below 1 Ω
E1-2 (TC) - E1-3 (T)	Rheostat knob fully turns counterclockwise.	10 kΩ or higher

NG → **REPLACE LIGHT CONTROL RHEOSTAT**

OK

6	CHECK HARNESS AND CONNECTOR (COMBINATION METER - LIGHT CONTROL RHEOSTAT)

Light Control Rheostat Wire Harness View:

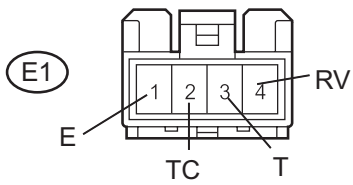

Combination Meter Assembly Wire Harness View:

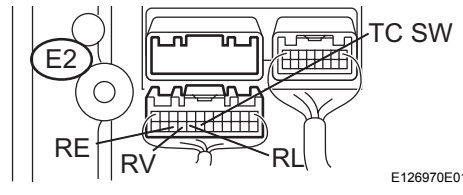

(a) Disconnect the E1 and E2 connectors.
(b) Measure the resistance according to the value(s) in the table below.

Resistance

Tester Connection	Condition	Specified Condition
E1-1 (E) - Body ground	Always	10 kΩ or higher
E1-2 (TC) - Body ground	Always	10 kΩ or higher
E1-3 (T) - Body ground	Always	10 kΩ or higher
E1-4 (RV) - Body ground	Always	10 kΩ or higher
E1-1 (E) - E2-22 (RE)	Always	Below 1 Ω
E1-2 (TC) - E2-19 (TC SW)	Always	Below 1 Ω
E1-3 (T) - E2-20 (RT)	Always	Below 1 Ω
E1-4 (RV) - E2-21 (RV)	Always	Below 1 Ω

NG → **REPAIR OR REPLACE HARNESS OR CONNECTOR**

OK

REPLACE COMBINATION METER ASSEMBLY

Clock Display Circuit

WIRING DIAGRAM

w/o Navigation System:

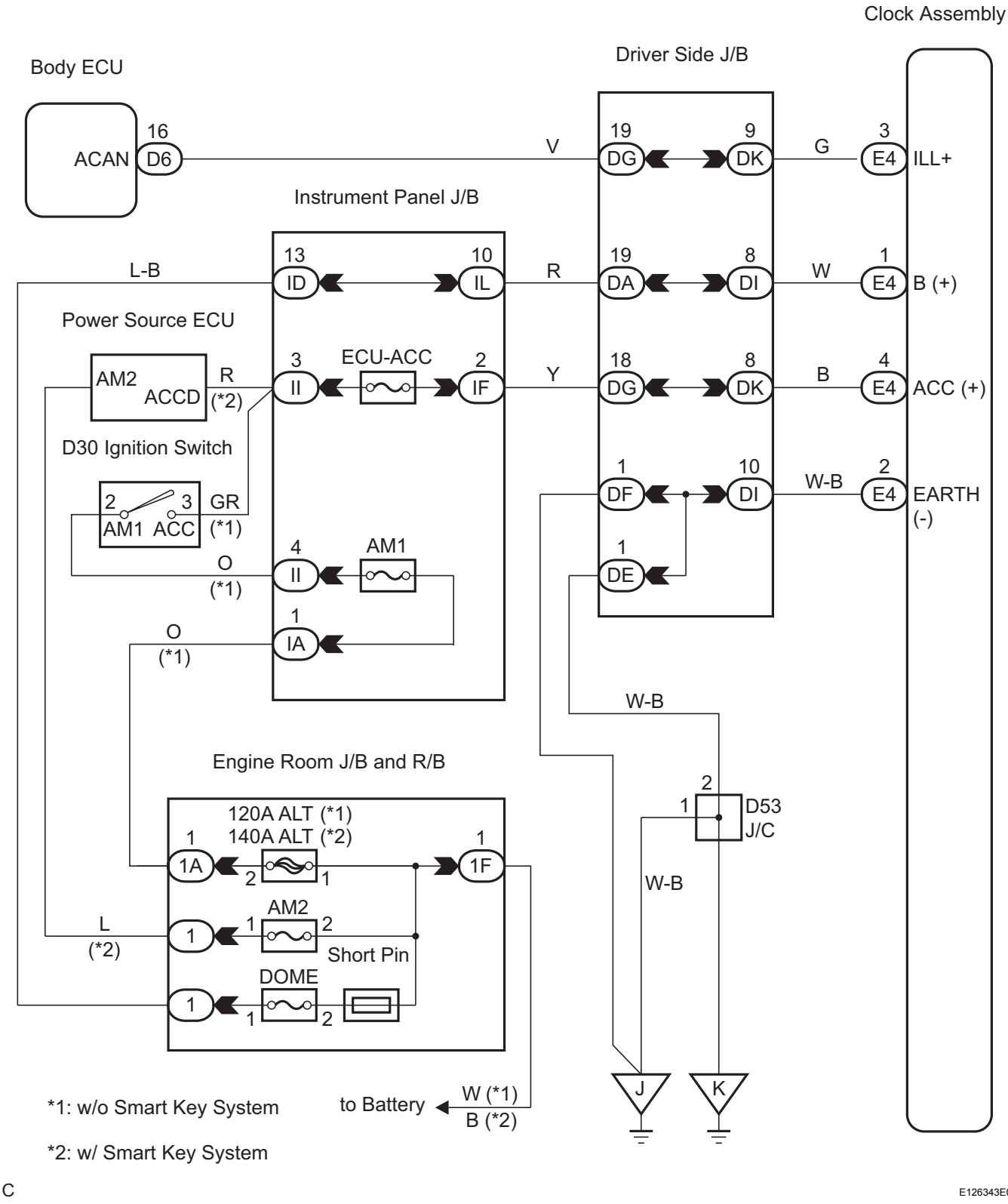

ME

w/ Navigation System:

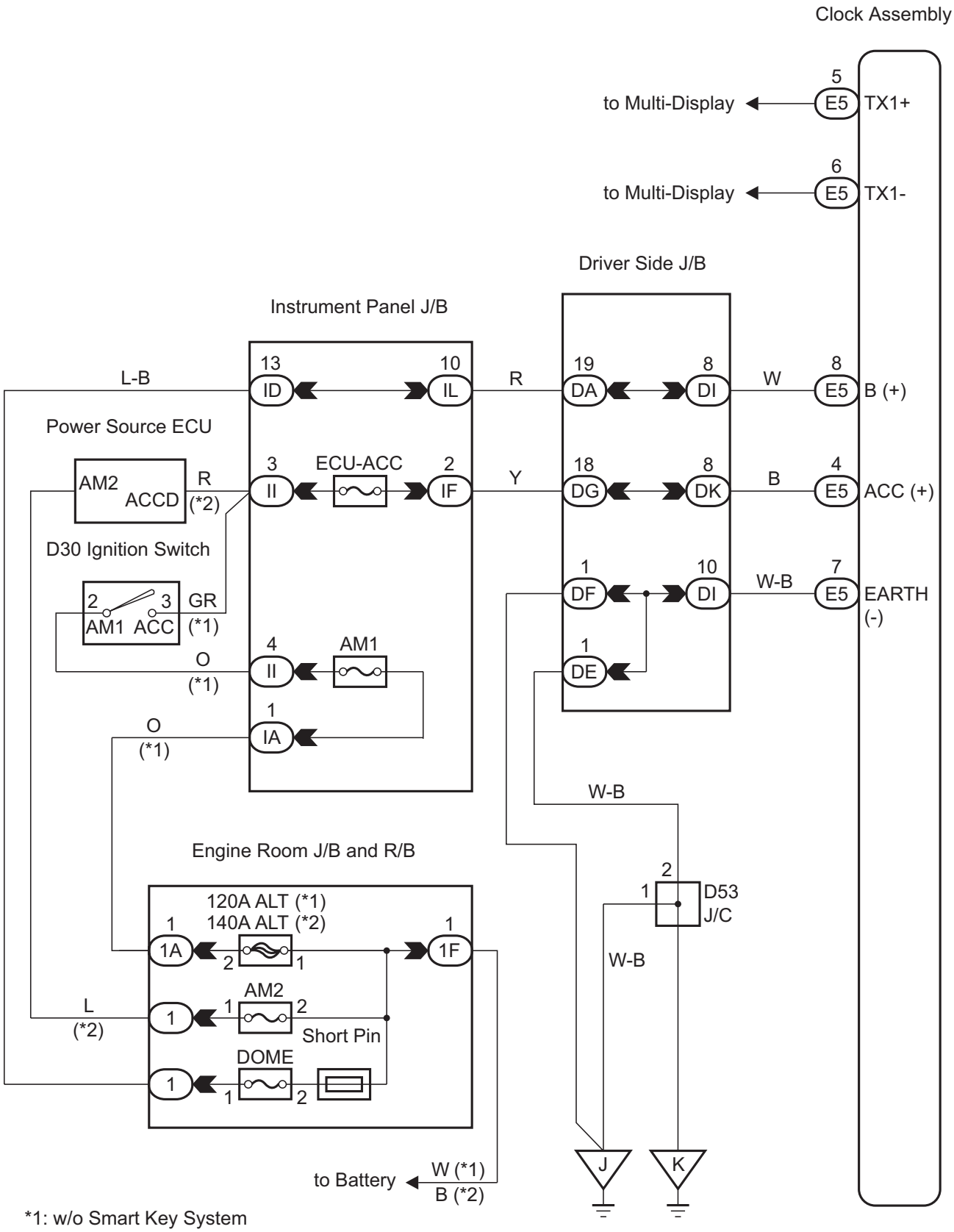

*1: w/o Smart Key System

*2: w/ Smart Key System

C

E126344E01

INSPECTION PROCEDURE

HINT:

- The whole accessory meter assembly should be replaced if the passenger seat belt warning light has a malfunction because this part is not independently supplied.
- If any DTC for the clock communication system is output, there may be a malfunction in communication between the clock assembly and multi-display.
- The combination meter assembly controls illumination through the ILL+ terminal.
- If deviation in the clock exceeds the specification, replace the accessory meter assembly (See page IP-10).

Standard:

w/o Navigation system: +-1 second/day
w/ Navigation system: -2 to 6 seconds/day

1 INSPECT CLOCK ASSEMBLY

Clock Display Wire Harness View:

(w/o Navigation System)

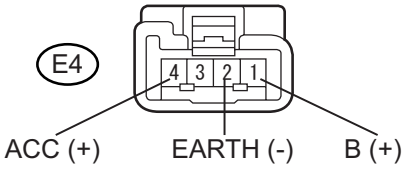

Clock Display Wire Harness View:

(w/ Navigation System)

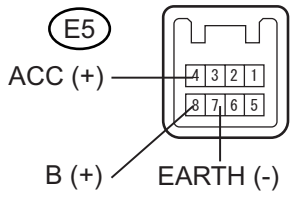

H E126345E01

(a) Remove the clock display.
(b) Disconnect the E4 (*1)/E5 (*2) connector.
(c) Measure the voltage according to the value(s) in the table below.

Voltage

Tester Connection	Condition	Specified Condition
E4-1 (B(+)) (*1) - Body ground	Always	10 to 14 V
E4-2 (EARTH(-)) (*1) - Body ground	Always	Below 1 V
E4-4 (ACC(+)) (*1) - Body ground	Ignition switch on (ACC)	10 to 14 V
E5-4 (ACC(+)) (*2) - Body ground	Ignition switch on (ACC)	10 to 14 V
E5-7 (EARTH(-)) (*2) - Body ground	Always	Below 1 V
E5-8 (B(+)) (*2) - Body ground	Always	10 to 14 V

(*1): w/o Navigation System
(*2): w/ Navigation System

NG → **REPAIR OR REPLACE HARNESS OR CONNECTOR**

OK

2 CHECK ILLUMINATION

w/o Navigation system	A
w/ Navigation system	B

B → **GO TO NAVIGATION SYSTEM**

A

3	CHECK HARNESS AND CONNECTOR (BODY ECU - CLOCK DISPLAY)

Clock Display Wire Harness View:

(w/o Navigation System)

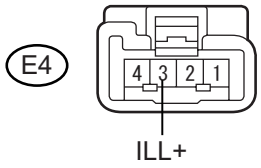

Body ECU Wire Harness View:

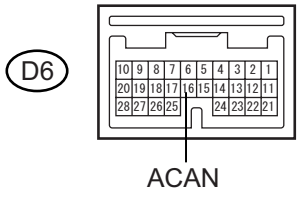

H E127745E01

(a) Disconnect the E4 and D6 connectors.
(b) Measure the resistance according to the value(s) in the table below.

Resistance

Tester Connection	Condition	Specified Condition
E4-3 (ILL+) - D6-16 (ACAN)	Always	Below 1 Ω
D6-16 (ACAN) - Body ground	Always	10 kΩ or higher

NG → **REPAIR OR REPLACE HARNESS OR CONNECTOR**

OK

4	INSPECT CLOCK ASSEMBLY

Clock Display Wire Harness View:

(w/o Navigation System)

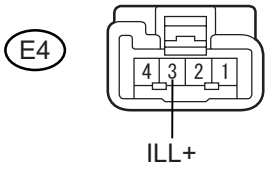

H E127746E01

(a) Remove the clock display with the connectors still connected.
(b) Disconnect the E4 connector.
(c) Measure the voltage according to the value(s) in the table below.

Voltage

Tester Connection	Condition	Specified Condition
E4-3 (ILL+) - Body ground	Ignition switch on (ACC) and TAIL on	10 to 14 V

NG → **REPLACE ACCESSORY METER ASSEMBLY**

OK

REPLACE BODY ECU

COMBINATION METER

COMPONENTS

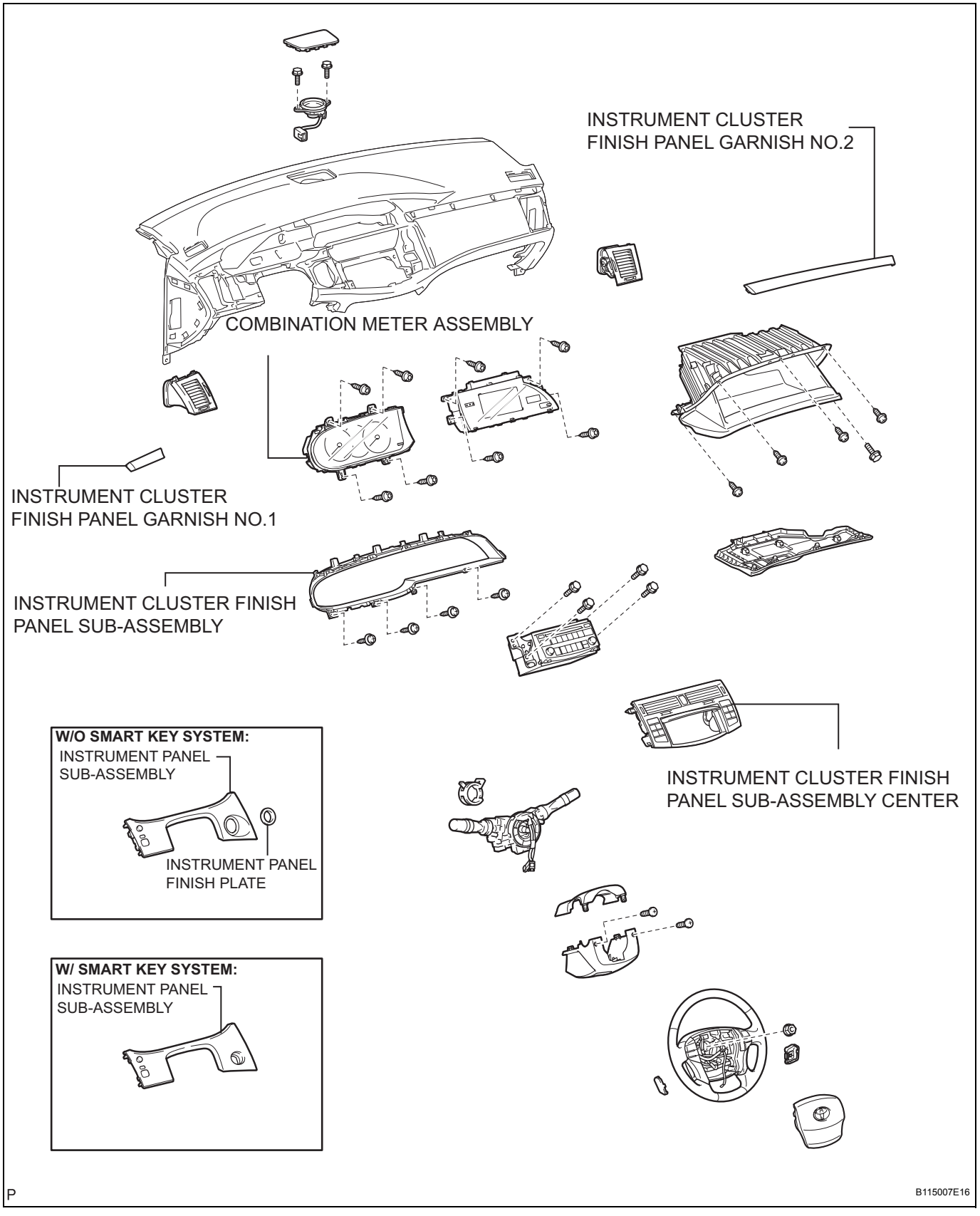

REMOVAL

1. **DISCONNECT CABLE FROM NEGATIVE BATTERY TERMINAL**
   CAUTION:
   Wait for 90 seconds after disconnecting the cable to prevent the airbag working.
2. **REMOVE INSTRUMENT CLUSTER FINISH PANEL GARNISH NO.1 (See page IP-9)**
3. **REMOVE INSTRUMENT CLUSTER FINISH PANEL GARNISH NO.2 (See page IP-9)**
4. **REMOVE INSTRUMENT PANEL FINISH PLATE (w/o Smart Key System)**
   (a) Remove the instrument panel finish plate.

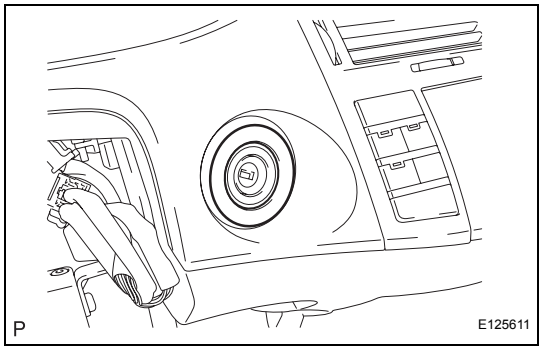

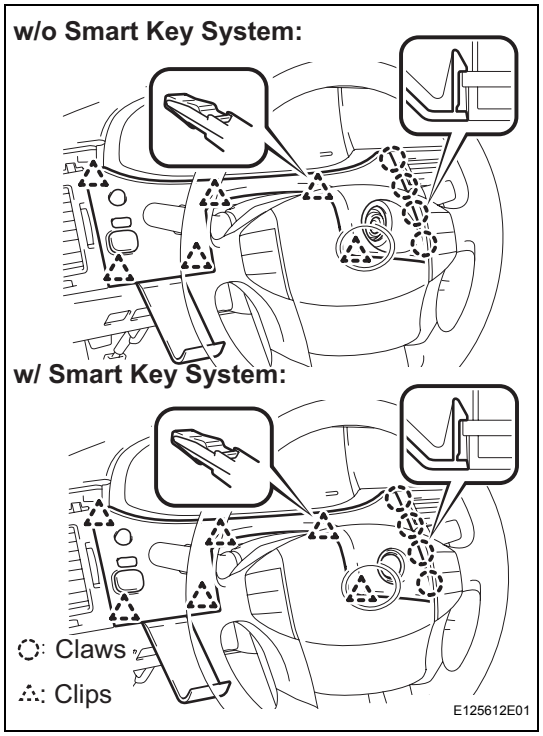

5. **REMOVE INSTRUMENT PANEL SUB-ASSEMBLY**
   (a) Using a moulding remover, disengage the 4 claws and 6 clips then remove the instrument panel sub-assembly.
6. **REMOVE INSTRUMENT CLUSTER FINISH PANEL SUB-ASSEMBLY CENTER**

ME

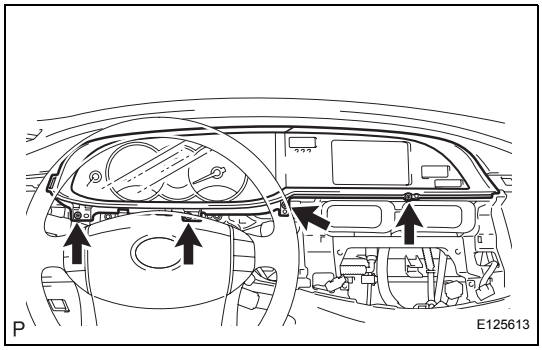

7. REMOVE INSTRUMENT CLUSTER FINISH PANEL SUB-ASSEMBLY

(a) Remove the 4 screws.

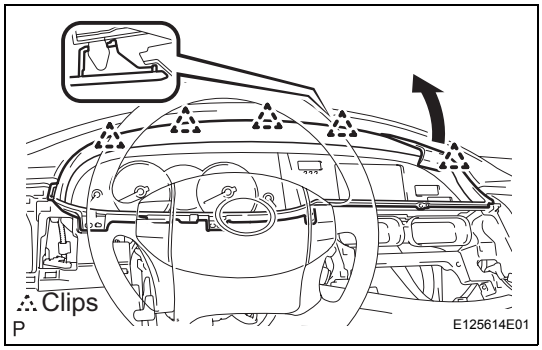

(b) Using a moulding remover, disengage the 5 clips and remove the instrument cluster finish panel sub-assembly.

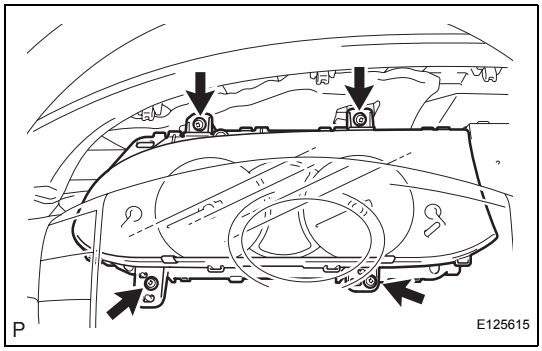

8. REMOVE COMBINATION METER ASSEMBLY

(a) Remove the 4 screws.

(b) Pull out combination meter assembly, then disconnect the connectors.

DISASSEMBLY

1. REMOVE COMBINATION METER GLASS

(a) Disengage the 8 claws and remove the combination meter glass.

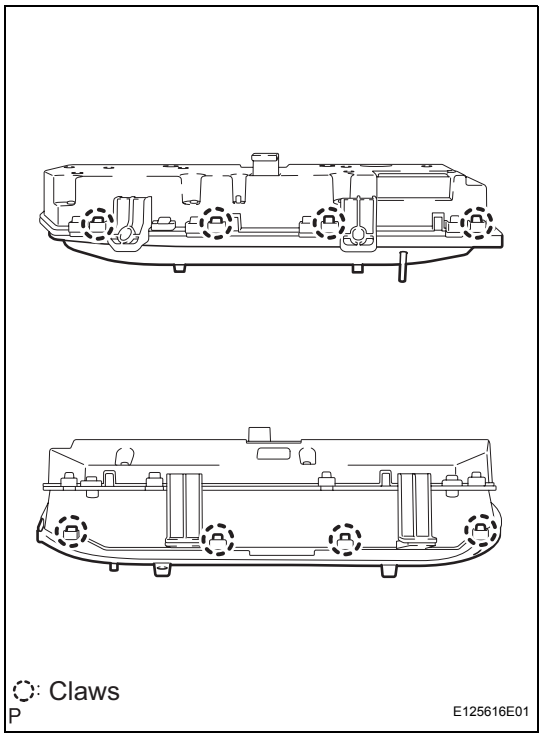

REASSEMBLY

1. INSTALL COMBINATION METER GLASS

INSTALLATION

1. **INSTALL COMBINATION METER ASSEMBLY**
2. **INSTALL INSTRUMENT CLUSTER FINISH PANEL SUB-ASSEMBLY**
3. **INSTALL INSTRUMENT CLUSTER FINISH PANEL SUB-ASSEMBLY CENTER**
4. **INSTALL INSTRUMENT PANEL SUB-ASSEMBLY**
5. **INSTALL INSTRUMENT PANEL FINISH PLATE (w/o Smart Key System)**
6. **INSTALL INSTRUMENT CLUSTER FINISH PANEL GARNISH NO.2**
7. **INSTALL INSTRUMENT CLUSTER FINISH PANEL GARNISH NO.1**
8. **CONNECT CABLE TO NEGATIVE BATTERY TERMINAL**
9. **PERFORM INITIALIZATION**
   (a) Some systems need initialization when disconnecting the cable from the negative battery terminal (See page IN-29).

POWER MIRROR CONTROL SYSTEM (w/ Memory)

PRECAUTION

NOTICE:
when disconnecting the negative (-) battery terminal, initialize the following systems after the terminal is reconnected.

System Name	See procedure
Power Window Control Control System	IN-29
Sliding Roof System	IN-29

1. EXPRESSIONS OF IGNITION SWITCH

The type ignition switch used on this model differs according to the specifications of the vehicle.
The expressions listed in the table below are used in this section.

Switch Type		Ignition Switch (position)	Engine Switch (condition)
Expression	Ignition Switch off	LOCK	Off
	Ignition Switch on (IG)	ON	On (IG)
	Ignition Switch on (ACC)	ACC	On (ACC)
	Engine Start	START	Start

PARTS LOCATION

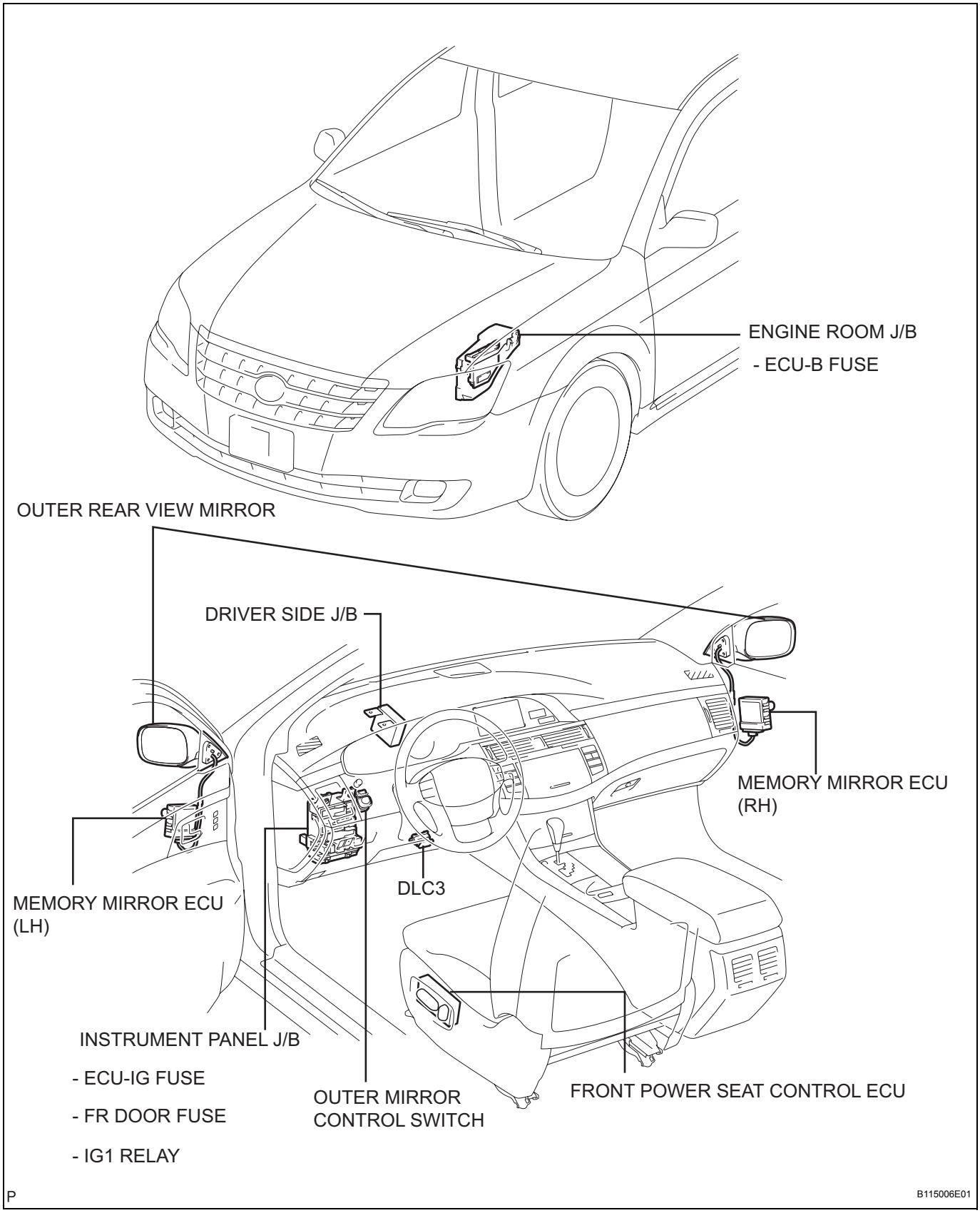

SYSTEM DIAGRAM

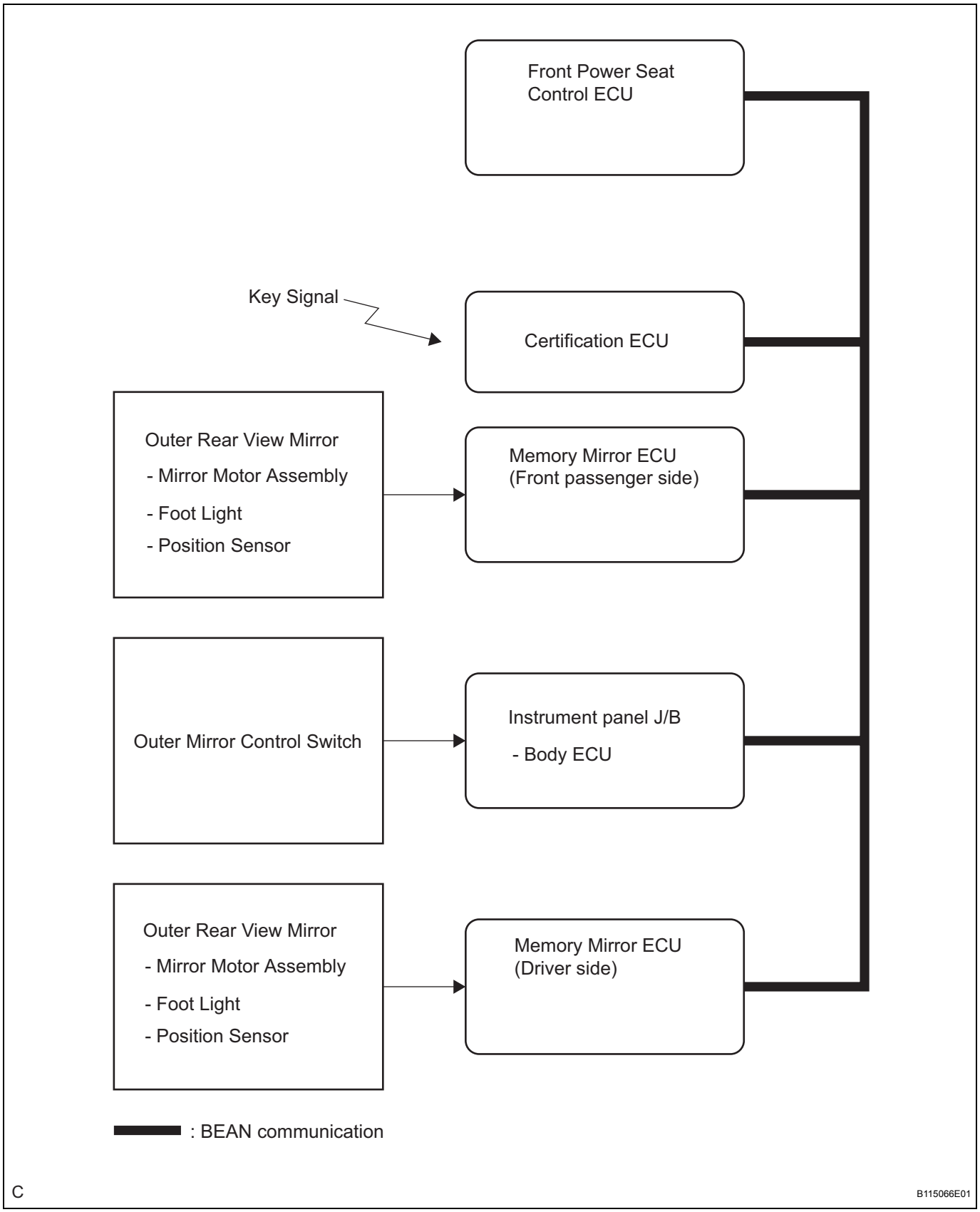

MI

SIGNAL COMMUNICATION TABLE:

Transmitting ECU (Transmitter)	Receiving ECU	Signals	Communication method
Power seat control ECU	memory mirror ECU (LH)	Memory switch status signal	BEAN
Power seat control ECU	memory mirror ECU (RH)	Memory switch status signal	BEAN
Memory mirror ECU (LH)	Power seat control ECU	Current switch status signal (Power mirror position)	BEAN
Memory mirror ECU (RH)	Power seat control ECU	Current switch status signal (Power mirror position)	BEAN
Certification ECU	memory mirror ECU (LH)	OPEN/CLOSE door lock signal	BEAN
Certification ECU	memory mirror ECU (RH)	OPEN/CLOSE door lock signal	BEAN
Body ECU	memory mirror ECU (LH)	• Body system signal • Mirror adjustment signal • Diagnostic tool request • Diagnostic erase	BEAN
Body ECU	memory mirror ECU (RH)	• Body system signal • Mirror adjustment signal • Diagnostic tool request • Diagnostic erase	BEAN

SYSTEM DESCRIPTION

1. POWER MIRROR CONTROL SYSTEM DESCRIPTION

This system has these functions: automatic glare-resistant electrochromic (EC) mirror, electrical remote control type mirror, memory function, foot light function, and rear window defogger-linked mirror defogger.

2. FUNCTION OF MAIN COMPONENT

Components	Function
Vertical mirror motor	Receives signal from memory mirror ECU and adjusts remote control mirror in the vertical direction.
Horizontal mirror motor	Receives signal from memory mirror ECU and adjusts remote control mirror in the horizontal direction.
Mirror defogger	Receives signal from defogger relay and starts mirror defogger.
EC mirror cell	Varies reflection rate of mirror through function of EC elements.
Mirror control switch	After selecting "R" or "L" switch, control switches change angle of mirror. Mirror signals are sent to memory mirror ECU through body ECU.
Mirror master switch	Consists of "R" and "L" switch. One must be chosen before mirror control switches can be operated.
Mirror position sensor	Detects remote control mirror position. This data is detested by memory mirror ECU.
Set switch Memory switch	When set switch and memory switches are pressed simultaneously, SET, 1 or 2 switch is input to body ECU and remote control mirror position is recorded. Then, when memory switch is pressed, 1 or 2 switch is input to memory mirror ECU and remote control mirror position changes according to memory.

3. SYSTEM OPERATION

The remote control mirror has following features:

Function	Outline
Ignition switch-linked automatic electrical retractable mirror	This function automatically retracts remote control mirrors when ignition switch is turned from ON to LOCK. This feature improves convenience of vehicle by eliminating need to manually operate mirror retract switch after stopping vehicle.
Manual electrical retractable mirror	This function retracts remote control mirrors when mirror retract switch is pressed.
Electrical remote control type mirror	When mirror control switch is operated, this function moves mirror surface vertically or laterally to enable driver to attain optimal mirror angle. Setting mirror master switch to "R" position operates right mirror, and to "L" position operates left mirror.
Rear window defogger-linked mirror defogger	This function automatically turns on mirror defogger when rear window defogger switch is turned on. After 15 minutes have elapsed from time this function has been activated, rear window defogger turns off automatically, and mirror defogger also turns off.
Wiper-linked mirror defogger	To improve rear visibility in the rain, this system automatically turns on mirror defogger when wiper switch is turned on.
Automatic glare-resistant EC mirror	This function helps to reduce glare/reflection in inner mirror during nighttime driving for safe driving conditions. Glare/reflection from vehicle headlights behind driver could blind driver and cause dangerous driving conditions.
Memory function	This function stores adjusted mirror position in driver and front passenger memory mirror ECU.

HOW TO PROCEED WITH TROUBLESHOOTING

HINT:

- Use this procedure to troubleshoot the power mirror control system with memory function.
- The intelligent tester should be used at steps 3 and 5.

1	VEHICLE BROUGHT TO WORKSHOP

NEXT

2	CUSTOMER PROBLEM ANALYSIS CHECK AND SYMPTOM CHECK

NEXT

3	INSPECT COMMUNICATION FUNCTION OF LARGE-SCALE MULTIPLEX COMMUNICATION SYSTEM (BEAN)

(a) Use the intelligent tester to check for normal function of the multiplex communication system.
  (1) (ECU unconnected, communication line malfunctioning) Without code outputs, proceed to A.
  (2) (ECU unconnected, communication line malfunctioning) With code outputs, proceed to B.

B → GO TO MULTIPLEX COMMUNICATION SYSTEM

A

4	PROBLEM SYMPTOMS TABLE

(a) If the fault is not listed on the problem symptoms table, proceed to A.
(b) If the fault is listed on the problem symptoms table, proceed to B.

B → Go to step 6

A

5	OVERALL ANALYSIS AND TROUBLESHOOTING

(a) DATA LIST/ACTIVE TEST (See page MI-9)
  (1) Inspection with the intelligent tester (DATE LIST).
  (2) Inspection with the intelligent tester (ACTIVE TEST).
(b) Terminal of ECU (See page MI-7).

NEXT

6	**ADJUSTMENT, REPAIR OR REPLACE**

NEXT

END

PROBLEM SYMPTOMS TABLE

POWER MIRROR CONTROL SYSTEM (w/ Memory)

Symptom	Suspected area	See page
Power mirror cannot be adjusted manually.	1. ECU power source circuit	MI-25
	2. Remote control mirror switch circuit	MI-15
	3. Mirror motor circuit	MI-18
	4. Outer mirror control switch	MI-40
	5. Memory mirror ECU	-
	6. Outer rear view mirror assembly	-
	7. Wire harness	-
Either driver side or passenger side power mirror cannot be adjusted manually.	1. ECU power source circuit	MI-25
	2. Remote control mirror switch circuit	MI-15
	3. Mirror motor circuit	MI-18
	4. Outer mirror control switch	MI-40
	5. Memory mirror ECU	-
	6. Outer rear view mirror assembly	-
	7. Wire harness	-
Power mirrors do not move to memorized positions.	1. ECU power source circuit	MI-25
	2. Remote control mirror switch circuit	MI-15
	3. Mirror motor circuit	MI-18
	4. Outer mirror control switch	MI-40
	5. Memory mirror ECU	-
	6. Outer rear view mirror assembly	-
	7. Wire harness	-
Foot lamp does not light up.	1. Lighting System (*1)	-
	2. Foot light circuit	MI-11
	3. Memory mirror ECU	-
	4. Outer rear view mirror assembly	-
	5. Wire harness	-
Memory function dose not operate.	1. Position sensor circuit	MI-22
	2. Power seat control ECU &power seat switch	-
	3. Memory mirror ECU	-
	4. Outer rear view mirror assembly	-
	5. Wire harness	-
Automatic glare-resistant electrochromic mirror system does not operate.	1. Inner rear view mirror assembly	MI-35
	2. Outer rear view mirror assembly	-
	3. Wire harness	-
Mirror heater system does not operate.	1. Check window defogger system	MI-37
	2. Outer rear view mirror assembly	-
	3. Wire harness	-

HINT:
*1: Front interior light, engine switch illumination and center console spots is abnormal light up.

TERMINALS OF ECU

1. MEMORY MIRROR ECU (LH)

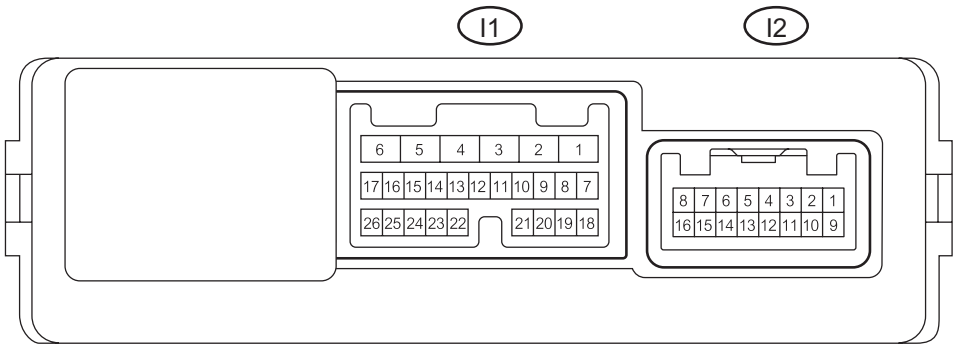

Symbols (Terminal No.)	Wiring Color	Terminal Description	Condition	Specified Condition
GND (I1-1) - Body ground	W-B - Body ground	Ground	Constant	Below 1 V
SIG (I1-3) - Body ground	GR - Body ground	Ignition power supply	Ignition switch OFF → ON	0 V → 10 to 14 V
CPUB (I1-4) - Body ground	W - Body ground	Battery (ECU power source)	Constant	10 to 14 V
BDR (I1-6) - Body ground	W - Body ground	Battery (Drive motor power supply for mirror face adjustment)	Constant	10 to 14 V
MPX1 (I1-8) - Body ground	- Body ground	Multiplex communication line	-	-
DMVR (I2-1) - Body ground	LG - Body ground	Outer mirror motor output / (Up / Down)	Ignition switch ACC, Up / Down adjustment switch L side, Mirror switch OFF → Up / Down	10 to 14 V
LP (I2-2) - Body ground	LG - Body ground	Puddle light signal	Receive the Input door LOCK or UNLOCK signal	10 to 14 V
DVC (I2-5) - Body ground	Y - Body ground	Power source for mirror position sensor	Ignition switch OFF → ACC	0 to 5 V
VSSR (I2-6) - Body ground	G - Body ground	Vertical direction position signal	Ignition switch ACC, Left/ Right adjustment switch L side, Mirror switch uppermost position → lowermost position	1 to 3 V
DMHR (I2-9) - Body ground	W - Body ground	Outer mirror motor output / (Left / Right)	Ignition switch ACC, Left / Right adjustment switch L side, Mirror switch OFF → Left / Right	10 to 14 V
DM+R (I2-10) - Body ground	R - Body ground	Outer mirror motor output / (All)	Ignition switch ACC, Left / Right, Up / Down adjustment switch L side, Mirror switch OFF → All	10 to 14 V
HSSR (I2-13) - Body ground	L - Body ground	Horizontal direction position signal	Ignition switch ACC, Left / Right adjustment switch L side, Mirror switch innermost position → outermost position	1 to 3 V
DE2 (I2-14) - Body ground	W-B - Body ground	Ground	Constant	Below 1 V

If the result is not as specified, replace the mirror assembly or the ECU may be malfunctioning.

2. MEMORY MIRROR ECU (RH)

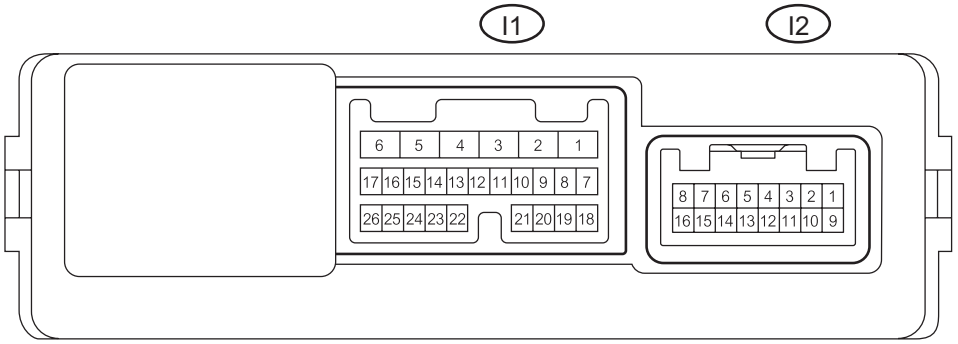

Symbols (Terminal No.)	Wiring Color	Terminal Description	Condition	Specified Condition
GND (H1-1) - Body ground	W-B - Body ground	Ground	Constant	Below 1 V
SIG (H1-3) - Body ground	GR - Body ground	Ignition power supply	Ignition switch OFF → ON	0 V → 10 to 14 V
CPUB (H1-4) - Body ground	W - Body ground	Battery (ECU power source)	Constant	10 to 14 V
BDR (H1-6) - Body ground	V - Body ground	Battery (Drive motor power supply for mirror face adjustment)	Constant	10 to 14 V
MPX1 (H1-8) - Body ground	- Body ground	Multiplex communication line	-	-
PMVR (H2-1) - Body ground	LG - Body ground	Outer mirror motor output / (Up / Down)	Ignition switch on (ACC), Up / Down adjustment switch R side, Mirror switch OFF → Up/Down	10 to 14 V
LP (H2-2) - Body ground	LG - Body ground	Puddle light signal	Receive the Input door LOCK or UNLOCK signal	10 to 14 V
PVC (H2-5) - Body ground	Y - Body ground	Power source for mirror position sensor	Ignition switch OFF → ACC	0 to 5 V
VSSR (H2-6) - Body ground	G - Body ground	Vertical direction position signal	Ignition switch on (ACC), Left/Right adjustment switch R side, Mirror switch uppermost position → lowermost position	1 to 3 V
PMHR (H2-9) - Body ground	V - Body ground	Outer mirror motor output / (Left / Right)	Ignition switch on (ACC), Left / Right adjustment switch R side, Mirror switch OFF → Left / Right	10 to 14 V
PM+R (H2-10) - Body ground	R - Body ground	Outer mirror motor output / (All)	Ignition switch ACC, Left / Right, Up / Down adjustment switch L side, Mirror switch OFF → All	10 to 14 V
HSSR (H2-13) - Body ground	L - Body ground	Horizontal direction position signal	Ignition switch on (ACC), Left / Right adjustment switch R side, Mirror switch innermost position → outermost position	1 to 3 V
DE2 (H2-14) - Body ground	W-B - Body ground	Ground	Constant	Below 1 V

If the result is not as specified, replace the mirror assembly or the ECU may be malfunctioning.

MI

DATA LIST / ACTIVE TEST

1. DATA LIST

HINT:

Using the DATA LIST displayed on the intelligent tester, you can read the value of the switch , sensor, actuator, etc. without parts removal. Reading the DATA LIST as the first step of troubleshooting way to shorten the labor time.

(a) Connect the intelligent tester to the DLC3.
(b) Turn the ignition switch on (IG).
(c) Read the DATA LIST according to the display on the tester.

Standard (Outer mirror control ECU):

Item	Measurement Item / Display (Range)	Normal Condition
MIRR POS SEN V	Vertical mirror position / MIN: 0, MAX: 5 V	Within range from 0 to 5 V
MIRR POS SEN H	Horizontal mirror position / MIN: 0, MAX: 5 V	Within range from 0 to 5 V
FOOT LIGHT SETUP	Foot light illumination time	OFF/7.5S/15S/30S
MIRROR MEM 1	Mirror position is memorized in memory switch M1 / NOT MEM or MEM	MEM: Memorized NOT MEM: Not memorized
MIRROR MEM 2	Mirror position is memorized in memory switch M2 / NOT MEM or MEM	MEM: Memorized NOT MEM: Not memorized

2. ACTIVE TEST

HINT:

Performing the ACTIVE TEST using the intelligent tester allows you to operate the the relay, VSV, actuator, etc. without removal. Performing the ACTIVE TEST as the first step of troubleshooting is one way to shorten the labor time.

It is possible to display the DATA LIST during the ACTIVE TEST.

(a) Connect the intelligent tester to the DLC3.
(b) Turn the ignition switch on (IG).
(c) Perform the ACTIVE TEST according to the display on the tester.

Standard (Outer mirror control ECU):

Item	Test Details
MIRR UP / DOWN	Mirror vertical operation UP / DOWN
MIRR RIGHT / LEFT	Mirror horizontal operation RIGHT / LEFT / DOWN
FOOT LIGHT	Illumination operation ON / OFF

Door Mirror Foot Light Circuit

DESCRIPTION

When the memory mirror ECU receives the signal(s) from the certification ECU through BEAN communication, it illuminates the foot light. The foot light is installed on the bottom of the outer rear view mirror and comes on or does off according to the following conditions.

The light comes on when:

- Doors are unlocked by wireless operation.
- The key code ID (key code recognition signal) for smart key system matches.
- The driver's door is manually unlocked with the shift lever is in the P position or the ignition off. (Both driver's and passenger's side come on.)

The light goes off when:

- Doors are locked by wireless operation.
- Doors are locked by the smart key system.
- The setting time has elapsed after the light come on.
- The setting time has elapsed after the driver's or passenger's door is closed while the light is on.
- The ignition is off and the shift lever is in any position other than P.
- Doors are locked or unlocked by interlock operation or manual switch.

WIRING DIAGRAM

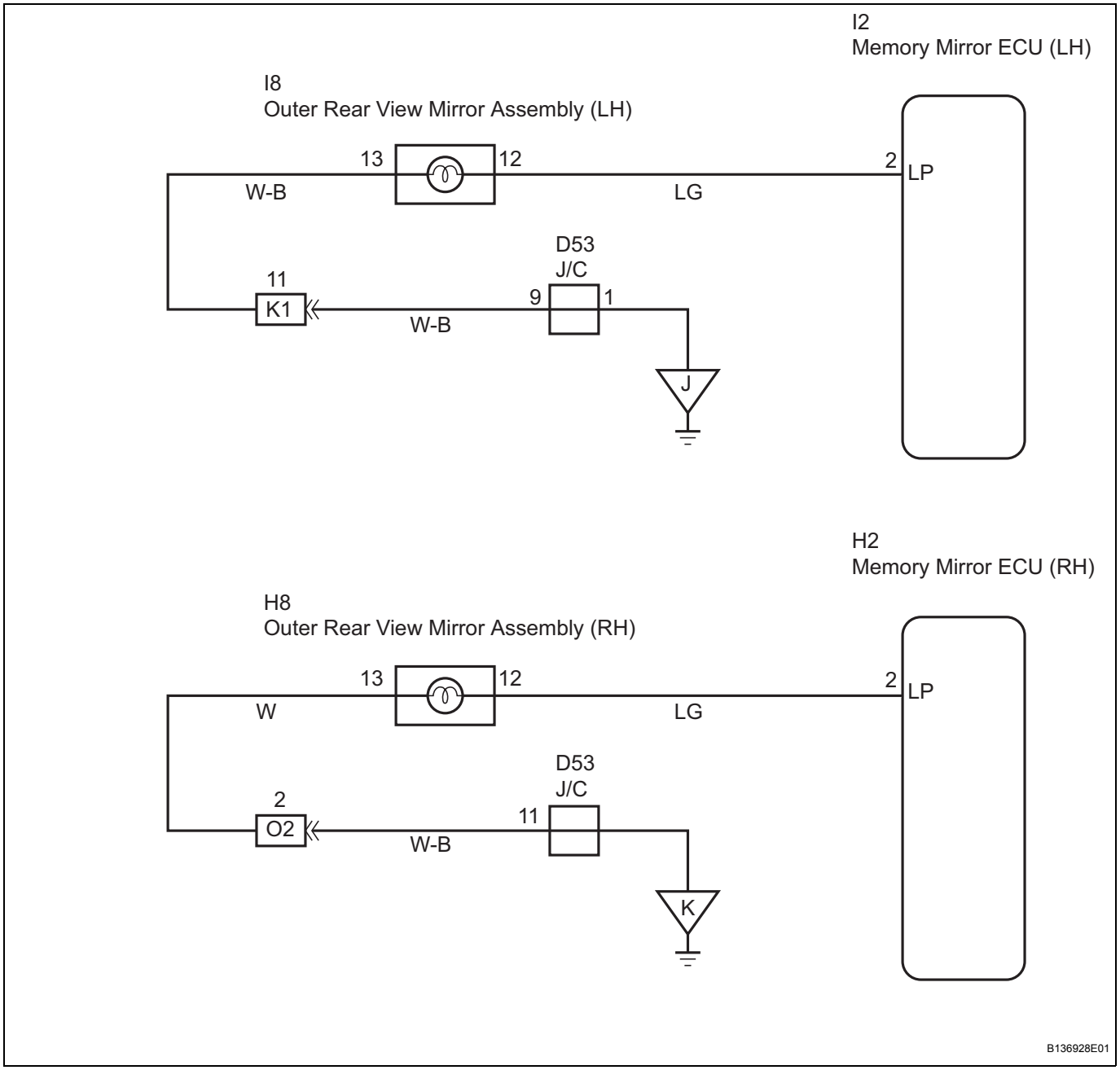

INSPECTION PROCEDURE

1	READ VALUE OF INTELLIGENT TESTER

(a) Check the ACTIVE TEST for proper functioning of the seat memory switch.

OUTER MIRROR CONTROL ECU

Item	Test Details
FOOT LIGHT	Illumination operation ON/OFF

OK:

Foot light comes on

MI

OK → **PROCEED TO NEXT CIRCUIT INSPECTION SHOWN IN PROBLEM SYMPTOMS TABLE**

NG

2	CHECK WIRE HARNESS (OUTER REAR VIEW MIRROR ASSEMBLY - MEMORY MIRROR ECU)

Wire Harness side:

I2
Memory Mirror ECU (LH)

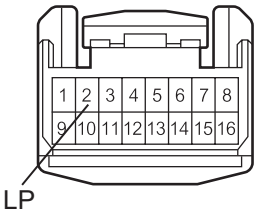

I8
Outer Rear View Mirror Assembly (LH)

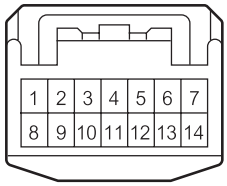

H

B131684E06

(a) LH:
(1) Disconnect the I2 and I8 connectors.
(2) Check the resistance of the wire harness side connectors.

Standard resistance

Tester Connection	Condition	Specified Condition
I8-12 - I2-2	Always	Below 1 Ω
I8-13 - Body ground		
I8-12 - Body ground		10 kΩ or higher

Wire Harness side:

H2
Memory Mirror ECU (RH)

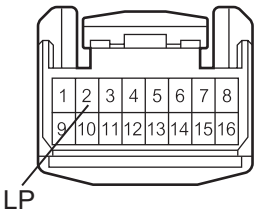

H8
Outer Rear View Mirror Assembly (RH)

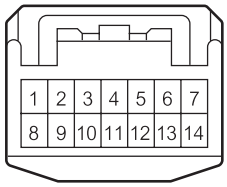

H

B131684E08

(b) RH:
(1) Disconnect the H2 and H8 connectors.
(2) Check the resistance of the wire harness side connectors.

Standard resistance

Tester Connection	Condition	Specified Condition
H8-12 - H2-2	Always	Below 1 Ω
H8-13 - Body ground		
H8-12 - Body ground		10 kΩ or higher

NG → **REPAIR OR REPLACE HARNESS AND CONNECTOR**

MI

OK

PROCEED TO NEXT CIRCUIT INSPECTION SHOWN IN PROBLEM SYMPTOMS TABLE

Mirror Switch Circuit

DESCRIPTION

A switch signal of the outer mirror switch is transmitted to the selected outer mirror control ECU by way of the body ECU. Then, the memory mirror ECU activates the mirror motor to move the mirror UP, DOWN, RIGHT and LEFT in response to the inputs.
HINT:
The power mirror control system is part of the multiplex communication system. This system features shared communication wiring that reduces the wiring complexity of the communication lines. The first step in any repair is to confirm the proper operation of the communication system. Proceed with troubleshooting after the communication has been verified (See Multiplex Communication System).
WIRING DIAGRAM

WIRING DIAGRAM

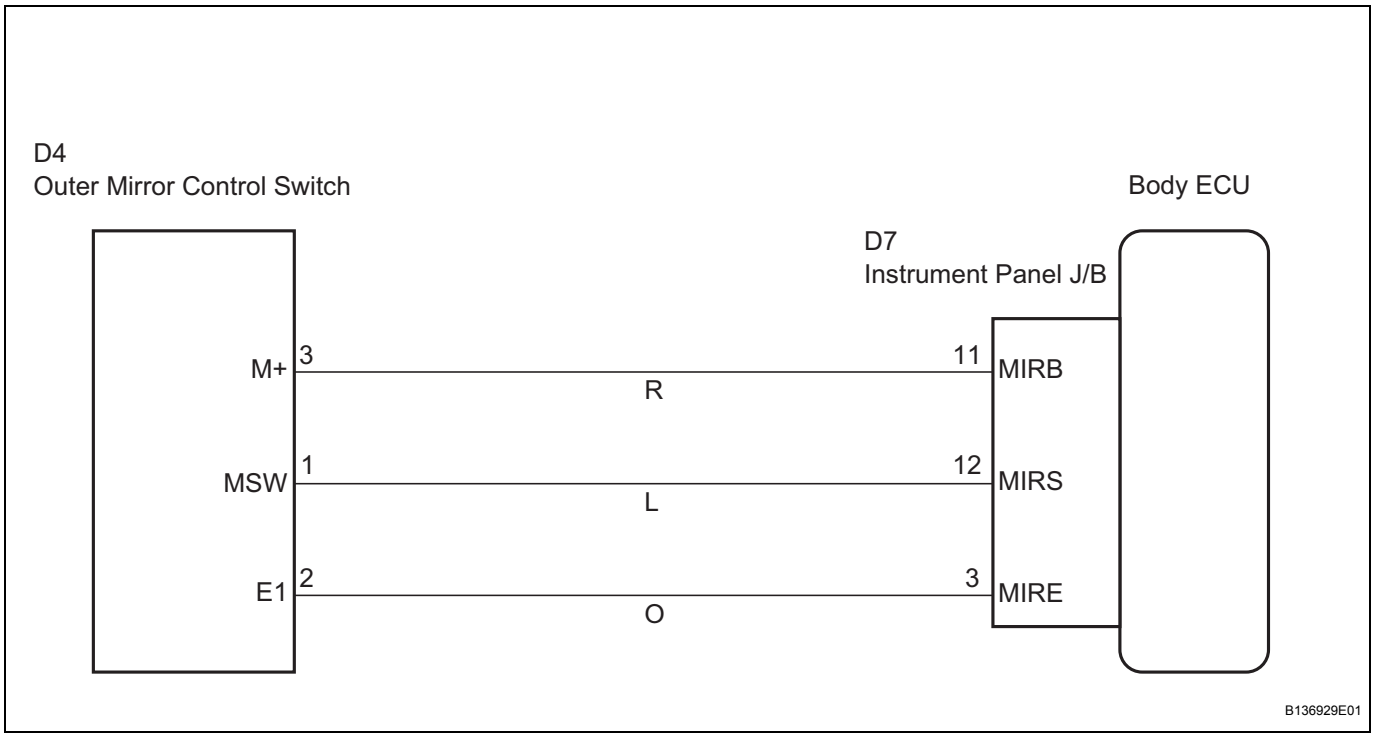

MI

INSPECTION PROCEDURE

1 INSPECT OUTER MIRROR SWITCH ASSEMBLY

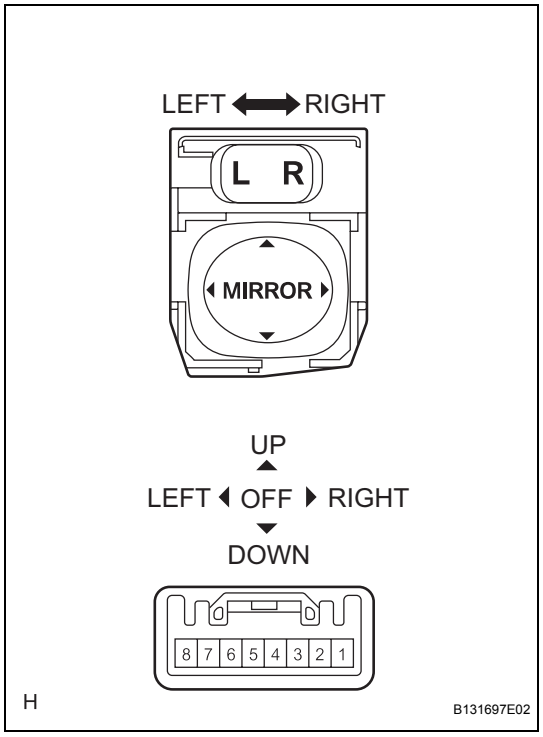

(a) Remove the outer mirror switch assembly.
(b) Measure the resistance between the wire harness connectors.

Vertical and horizontal operation

Tester Connection	Switch Position	Specified Condition
2 - 3	OFF	10 kΩ or higher
	UP	100 Ω
	DOWN	250 Ω
	LEFT	470 Ω
	RIGHT	800 Ω

Left or right side operation

Tester Connection	Switch Position	Specified Condition
1 - 2	L	100 Ω
	R	10 Ω or less

NG → **REPLACE OUTER MIRROR SWITCH ASSEMBLY**

OK

2 CHECK WIRE HARNESS (OUTER MIRROR SWITCH ASSEMBLY - INSTRUMENT PANEL J/B)

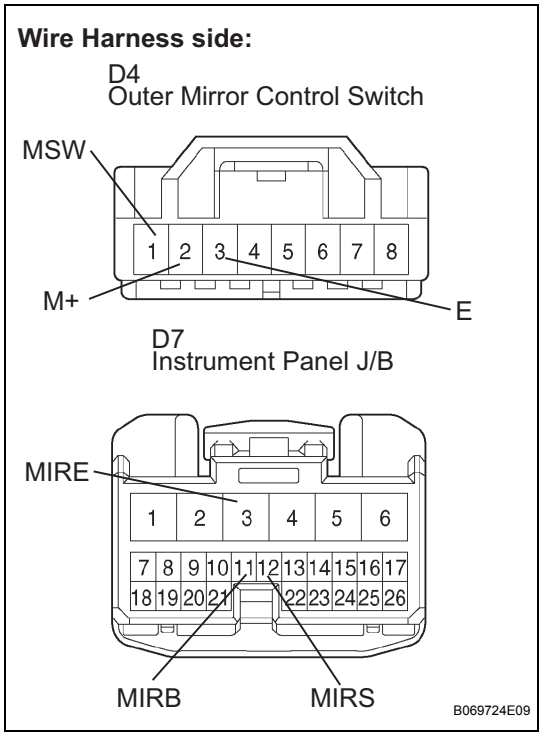

(a) Disconnect the D4 and D7 connectors.
(b) Measure the resistance between the wire harness connectors.

Standard resistance

Tester Connection	Switch Position	Specified Condition
D4-1 - D7-12	Always	Below 1 Ω
D4-2 - D7-3		
D4-3 - D7-11		
D4-1 - Body ground		10 kΩ or higher
D4-1 - Body ground		
D4-1 - Body ground		

NG → **REPAIR OR REPLACE HARNESS AND CONNECTOR**

MI

OK

PROCEED TO NEXT CIRCUIT INSPECTION SHOWN IN PROBLEM SYMPTOMS TABLE

Mirror Motor Circuit

DESCRIPTION

A mirror control switch signal and memorized mirror positions are set to the memory mirror ECU. The memory mirror ECU drive the selected mirror UP, DOWN, LEFT and RIGHT in response to the inputs.
HINT:
The power mirror control system is part of the large-scale multiplex communication system. This system features shared communication wiring that reduces the wiring complexity of the communication lines. The first step in any repair is to confirm the proper operation of the communication system. Proceed with troubleshooting after the communication has been verified (See Multiplex Communication system).

WIRING DIAGRAM

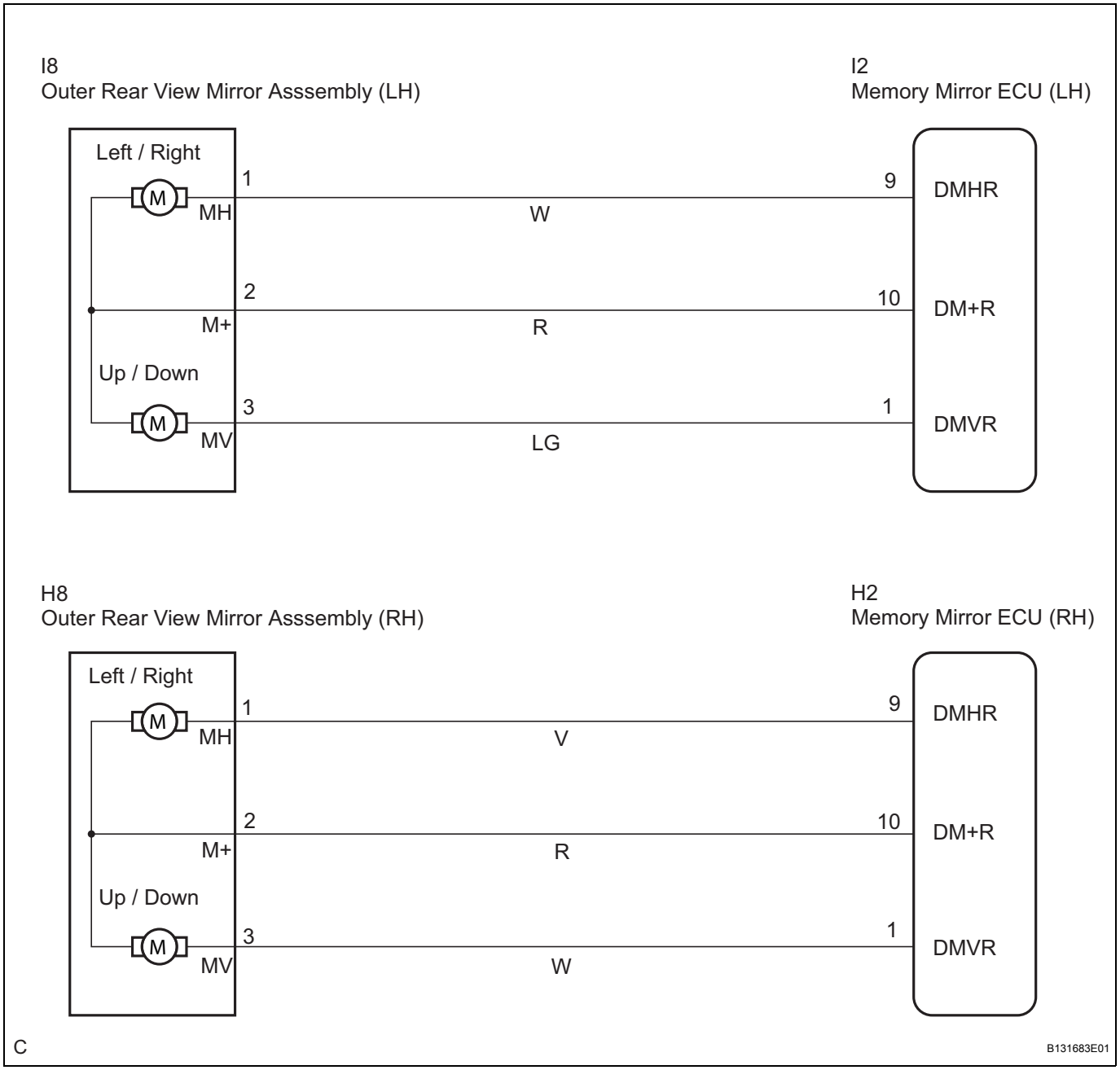

MI

INSPECTION PROCEDURE

1	PERFORM ACTIVE TEST USING INTELLIGENT TESTER

(a) Select the ACTIVE TEST, use the intelligent tester to generate a control command, and then check that the outer rear view mirrors.

OUTER MIRROR CONTROL ECU:

Item	Tester Details
MIRR UP / DOWN	Mirror vertical operation UP / DOWN
MIRR RIGHT / LEFT	Mirror horizontal operation RIGHT / LEFT

OK:
Mirror is UP / DOWN or RIGHT / LEFT

NG → **Go to step 2**

OK

PROCEED TO NEXT CIRCUIT INSPECTION SHOWN IN PROBLEM SYMPTOMS TABLE

2	INSPECT OUTER REAR VIEW MIRROR ASSEMBLY

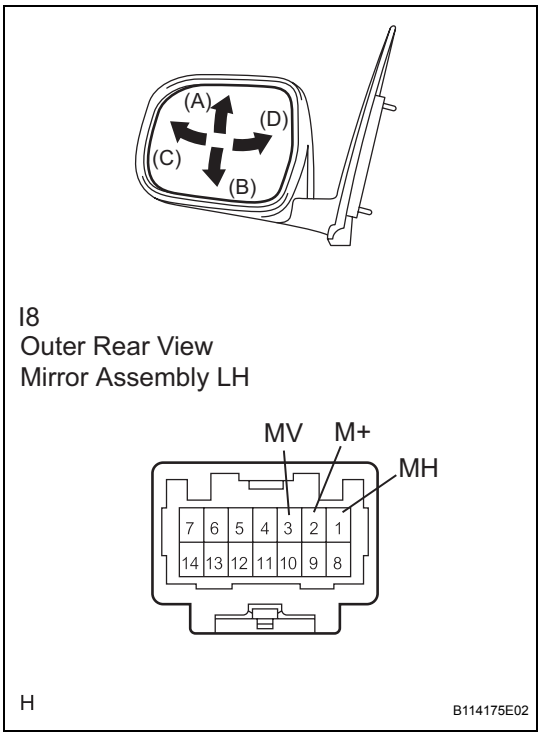

(a) LH:
(1) Disconnect the I8 connector.
(2) Apply battery voltage and check operation of the mirror face.
Standard

Measurement Condition	Mirror Operation
Battery positive (+) → I8-3 (MV) Battery negative (-) → I8-2 (M+)	**Turns upward (A)**
Battery positive (+) → I8-2 (M+) Battery negative (-) → I8-3 (MV)	**Turns downward (B)**
Battery positive (+) → I8-2 (M+) Battery negative (-) → I8-1 (MH)	**Turns left (C)**
Battery positive (+) → I8-1 (MH) Battery negative (-) → I8-2 (M+)	**Turns right (D)**

If the result is not as specified, proceed to NG-A

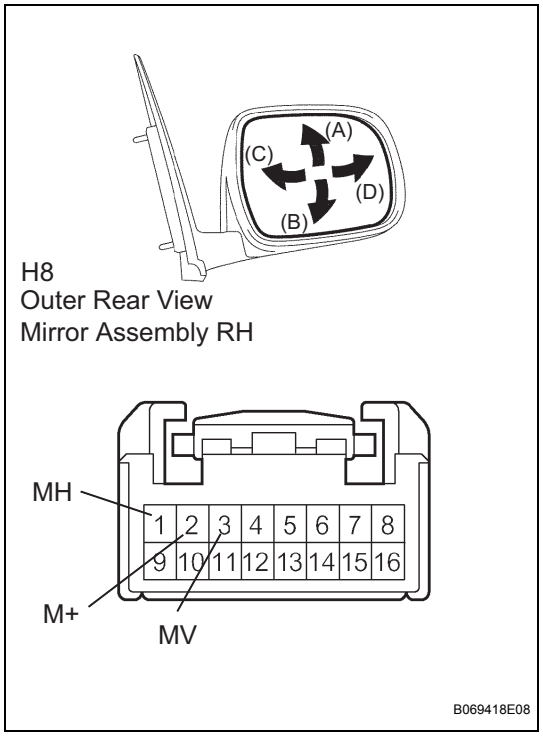

(b) RH:
(1) Disconnect the H8 mirror connector.
(2) Apply battery voltage and check operation of the mirror face.

Standard

Measurement Condition	Mirror Operation
Battery positive (+) → I8-3 (MV) Battery negative (-) → I8-2 (M+)	Turns upward (A)
Battery positive (+) → I8-2 (M+) Battery negative (-) → I8-3 (MV)	Turns downward (B)
Battery positive (+) → I8-2 (M+) Battery negative (-) → I8-1 (MH)	Turns left (C)
Battery positive (+) → I8-1 (MH) Battery negative (-) → I8-2 (M+)	Turns right (D)

If the result is not as specified, proceed to NG-B

NG-A → **REPLACE OUTER REAR VIEW MIRROR ASSEMBLY LH**

NG-B → **REPLACE OUTER REAR VIEW MIRROR ASSEMBLY RH**

OK

3	CHECK WIRE HARNESS (OUTER REAR VIEW MIRROR ASSEMBLY - MEMORY MIRROR ECU)

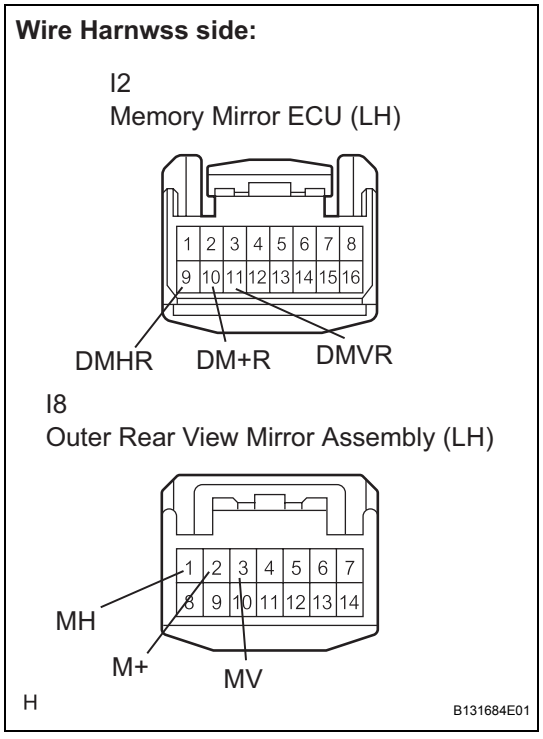

(a) LH:
(1) Disconnect the I2 and I8 connectors.
(2) Check the resistance of the wire harness side connectors.

Resistance

Tester Connection	Condition	Specified Condition
I8-1 - I2-9	Always	Below 1 Ω
I8-2 - I2-10	Always	Below 1 Ω
I8-3 - I2-1	Always	Below 1 Ω
I8-1 - Body ground	Always	10 kΩ or higher
I8-2 - Body ground	Always	10 kΩ or higher
I8-3 - Body ground	Always	10 kΩ or higher

MI

Wire Harnwss side:

H2
Memory Mirror ECU (RH)

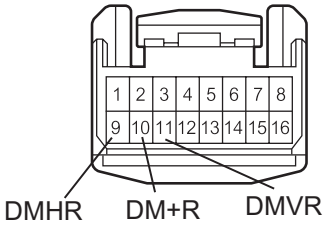

H8
Outer Rear View Mirror Assembly (RH)

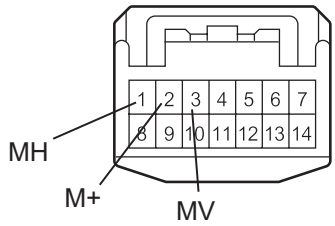

H

B131684E02

(b) RH:
(1) Disconnect the H2 and H8 connectors.
(2) Check the resistance of the wire harness side connectors.

Resistance

Tester Connection	Condition	Specified Condition
I8-1 - I2-9	Always	Below 1 Ω
I8-2 - I2-10	Always	Below 1 Ω
I8-3 - I2-1	Always	Below 1 Ω
I8-1 - Body ground	Always	10 kΩ or higher
I8-2 - Body ground	Always	10 kΩ or higher
I8-3 - Body ground	Always	10 kΩ or higher

NG → **REPAIR OR REPLACE HARNESS OR CONNECTOR**

OK

PROCEED TO NEXT CIRCUIT INSPECTION SHOWN IN PROBLEM SYMPTOMS TABLE

Position Sensor Circuit

DESCRIPTION

When SET and 1 or 2 are pressed, the position sensor detects the mirror position and sends the signal to the memory mirror ECU. Then when position 1 or 2 is pressed, the memory mirror ECU drives the mirror motor based on the memorized sensor positions.

HINT:

The power mirror control system is part of the multiplex communication system. This system features shared communication wiring that reduces the wiring complexity of the communication lines. The first step in any repair is to confirm the proper operation of the communication system. Proceed with troubleshooting after the communication has been verified (See Multiplex Communication System).

WIRING DIAGRAM

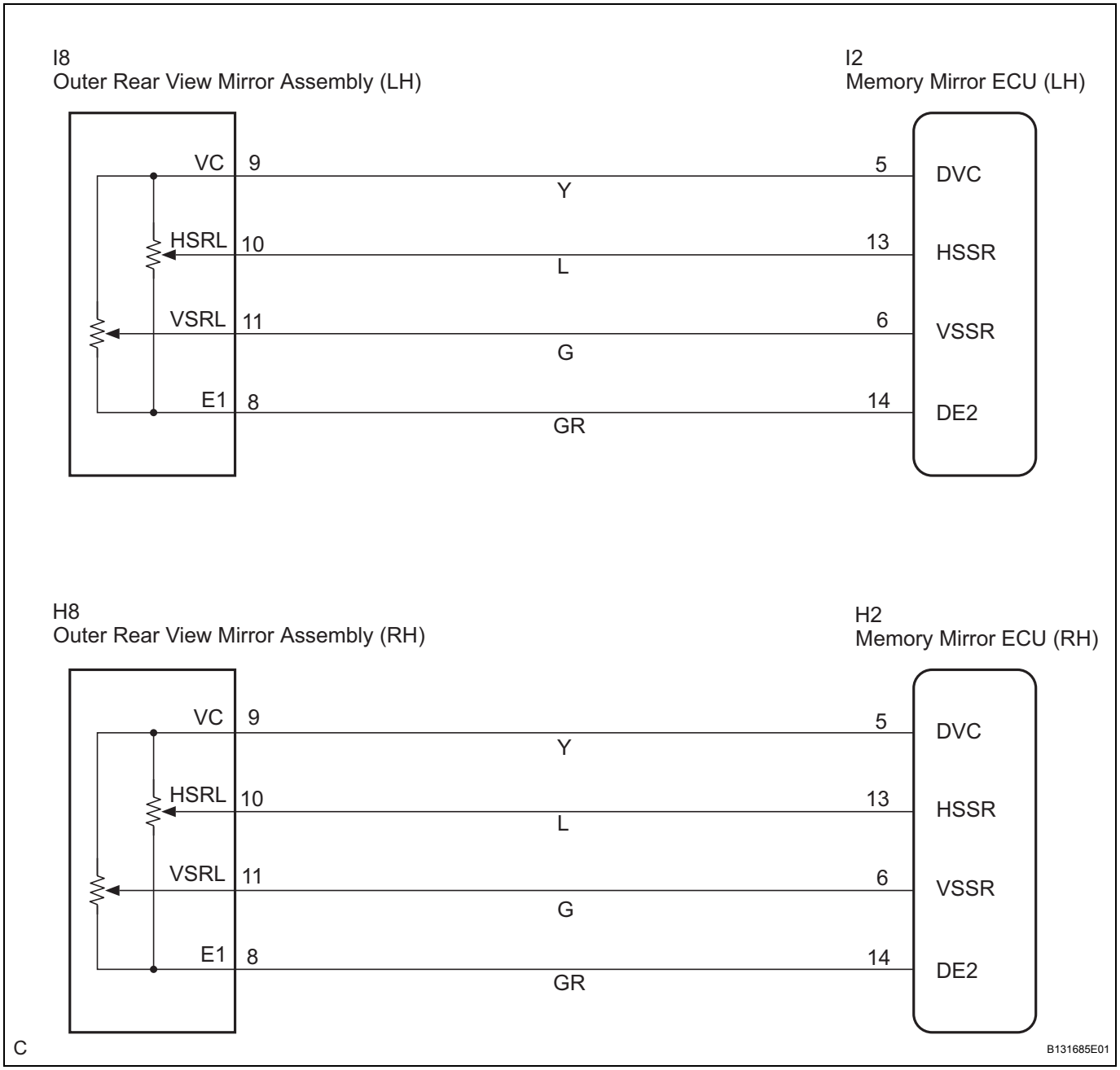

MI

INSPECTION PROCEDURE

1	READ VALUE OF INTELLIGENT TESTER

(a) Check the DATA LIST for proper functioning of the seat memory switch.

OUTER MIRROR CONTROL ECU:

Item	Switch Position	Specified condition
MIR POS SEN V	Mirror position sensor voltage (Vertical direction)	0 to 5 V
MIR POS SEN H	Mirror position sensor voltage (Horizontal direction)	0 to 5 V

OK:
0 to 5 V is displayed

NG → **Go to step 2**

OK

PROCEED TO NEXT CIRCUIT INSPECTION SHOWN IN PROBLEM SYMPTOMS TABLE

2	CHECK WIRE HARNESS (OUTER REAR VIEW MIRROR ASSEMBLY - MEMORY MIRROR ECU)

Wire Harnwss side:

I2
Memory Mirror ECU (LH)

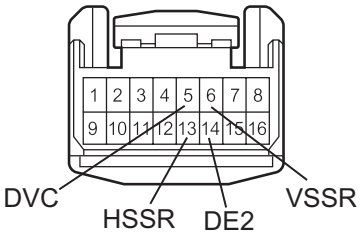

I8
Outer Rear View Mirror Assembly (LH)

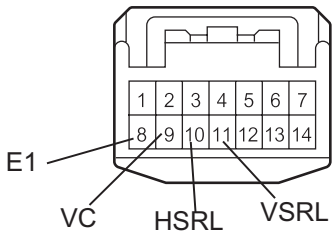

H

B131684E03

(a) LH:
(1) Disconnect the I2 and I8 connectors.
(2) Check the resistance of the wire harness side connectors.
Resistance

Tester Connection (Symbols)	Condition	Specified Condition
I8-8 - I2-14	Always	Below 1 Ω
I8-9 - I2-5	Always	Below 1 Ω
I8-10 - I2-13	Always	Below 1 Ω
I8-11 - I2-6	Always	Below 1 Ω
I8-8 - Body ground	Always	10 kΩ or higher
I8-9 - Body ground	Always	10 kΩ or higher
I8-10 - Body ground	Always	10 kΩ or higher
I8-11 - Body ground	Always	10 kΩ or higher

Wire Harnwss side:

H2
Memory Mirror ECU (RH)

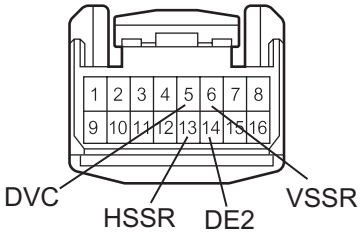

H8
Outer Rear View Mirror Assembly (RH)

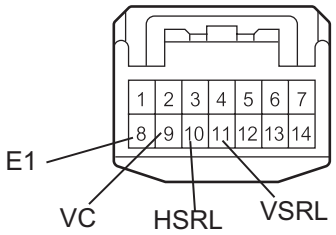

H

B131684E04

(b) RH:
(1) Disconnect the H2 and H8 connectors.
(2) Check the resistance of the wire harness side connectors.

Resistance

Tester Connection (Symbols)	Condition	Specified Condition
I8-8 - I2-14	Always	Below 1 Ω
I8-9 - I2-5	Always	Below 1 Ω
I8-10 - I2-13	Always	Below 1 Ω
I8-11 - I2-6	Always	Below 1 Ω
I8-8 - Body ground	Always	10 kΩ or higher
I8-9 - Body ground	Always	10 kΩ or higher
I8-10 - Body ground	Always	10 kΩ or higher
I8-11 - Body ground	Always	10 kΩ or higher

NG → **REPAIR OR REPLACE HARNESS AND CONNECTOR**

OK

PROCEED TO NEXT CIRCUIT INSPECTION SHOWN IN PROBLEM SYMPTOMS TABLE

ECU Power Source Circuit

DESCRIPTION

This is the power source circuit for the memory mirror ECU

WIRING DIAGRAM

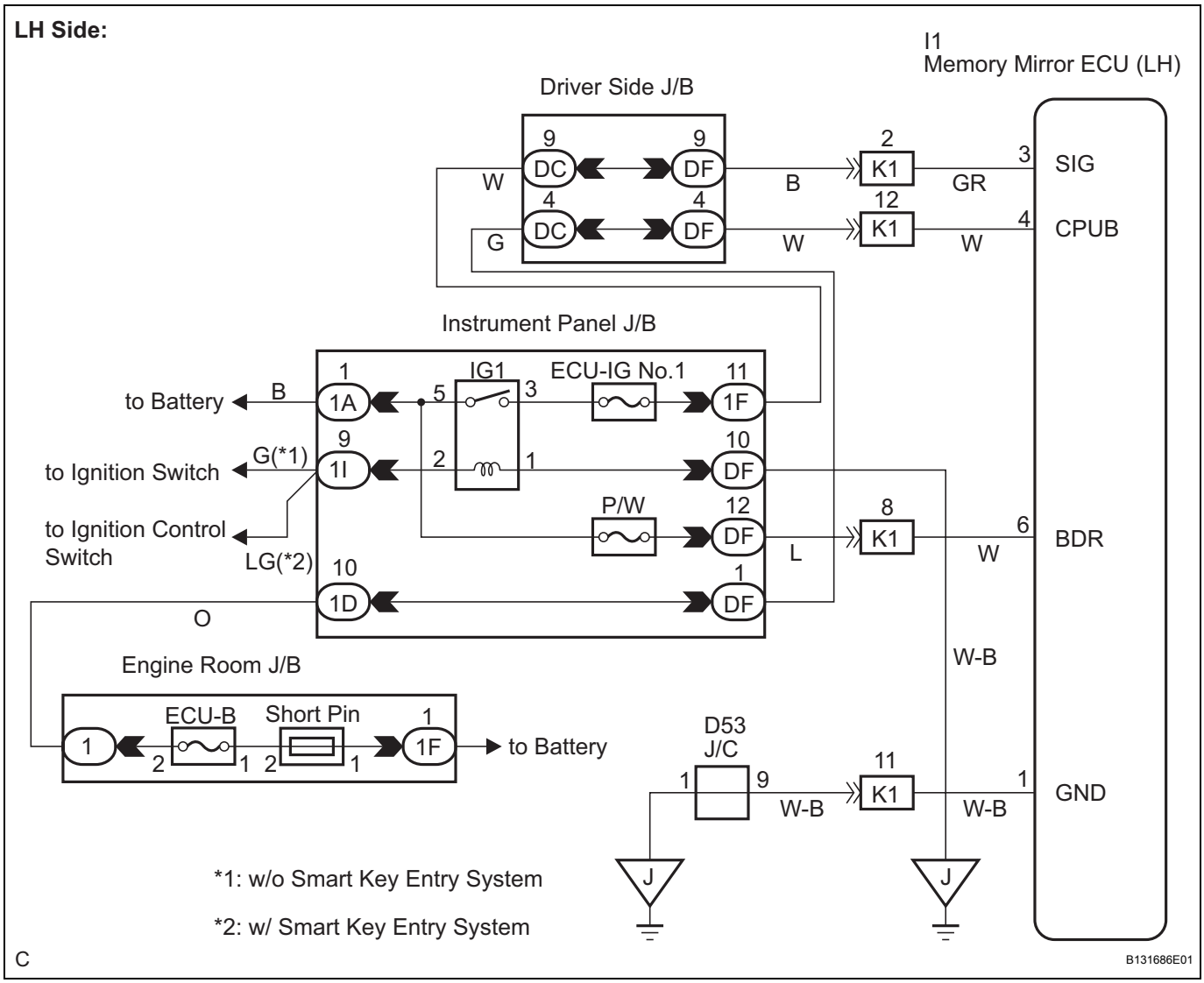

MI

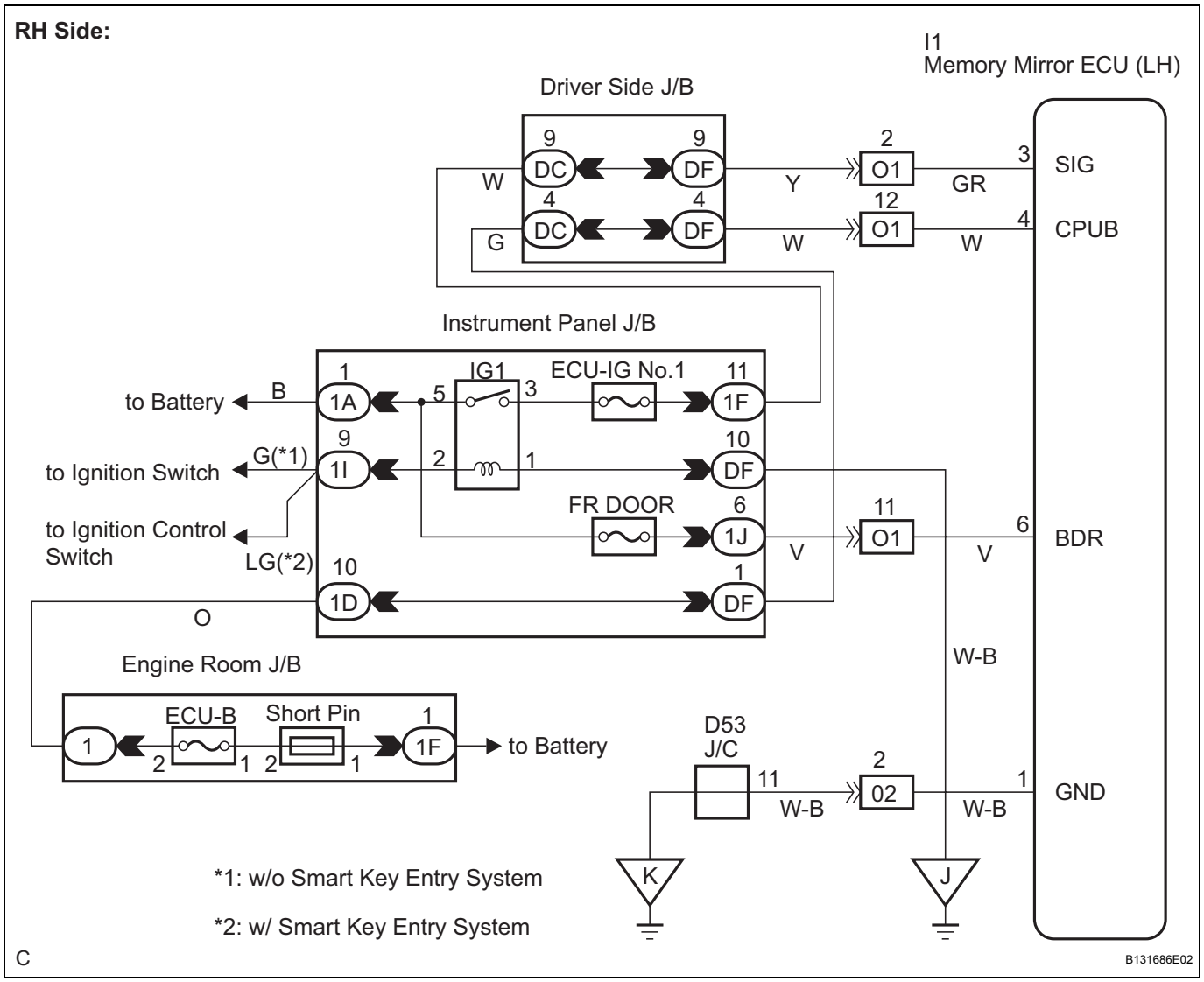

INSPECTION PROCEDURE

1	CHECK MEMORY MIRROR ECU (POWER SOURCE)

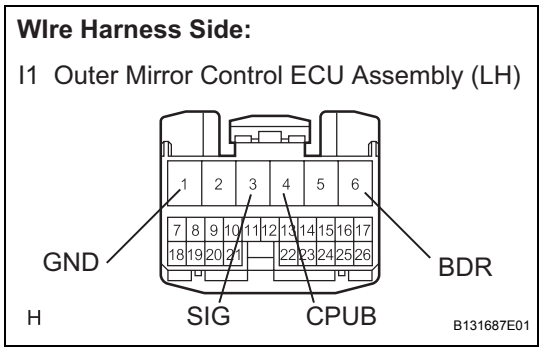

(a) LH:
(1) Disconnect the I1 connector.
(2) Measure the resistance according to the value(s) in the table below.

Resistance

Tester Connection	Condition	Specified Condition
I1-1 (GND) - Body ground	Always	Below 1 Ω

(3) Measure the voltage according to the value(s) in the table below.

Voltage

Tester Connection	Condition	Specified Condition
I1-3 (SIG) - Body ground	Ignition switch OFF → ON	0 V → 10 to 14 V

MI

Tester Connection	Condition	Specified Condition
I1-4 (CPUB) - Body ground	Constant	10 to 14 V
I1-6 (BDR) - Body ground	Constant	10 to 14 V

Wire Harness Side:

H1 Outer Mirror Control ECU Assembly (RH)

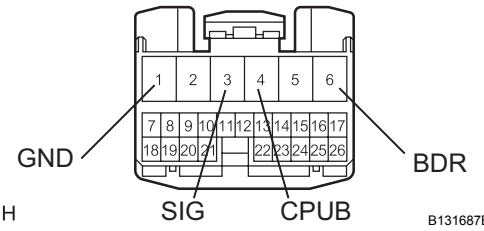

(b) RH:

(1) Disconnect the H1 connector.

(2) Measure the resistance according to the value(s) in the table below.

Resistance

Tester Connection	Condition	Specified Condition
H1-1 (GND) - Body ground	Always	Below 1 Ω

(3) Measure the voltage according to the value(s) in the table below.

Voltage

Tester Connection	Condition	Specified Condition
H1-3 (SIG) - Body ground	Ignition switch OFF → ON	0 V → 10 to 14 V
H1-4 (CPUB) - Body ground	Constant	10 to 14 V
H1-6 (BDR) - Body ground	Constant	10 to 14 V

NG → **REPAIR OR REPLACE HARNESS AND CONNECTOR**

OK

PROCEED TO NEXT CIRCUIT INSPECTION SHOWN IN PROBLEM SYMPTOMS TABLE

POWER MIRROR CONTROL SYSTEM (w/o Memory)

PARTS LOCATION

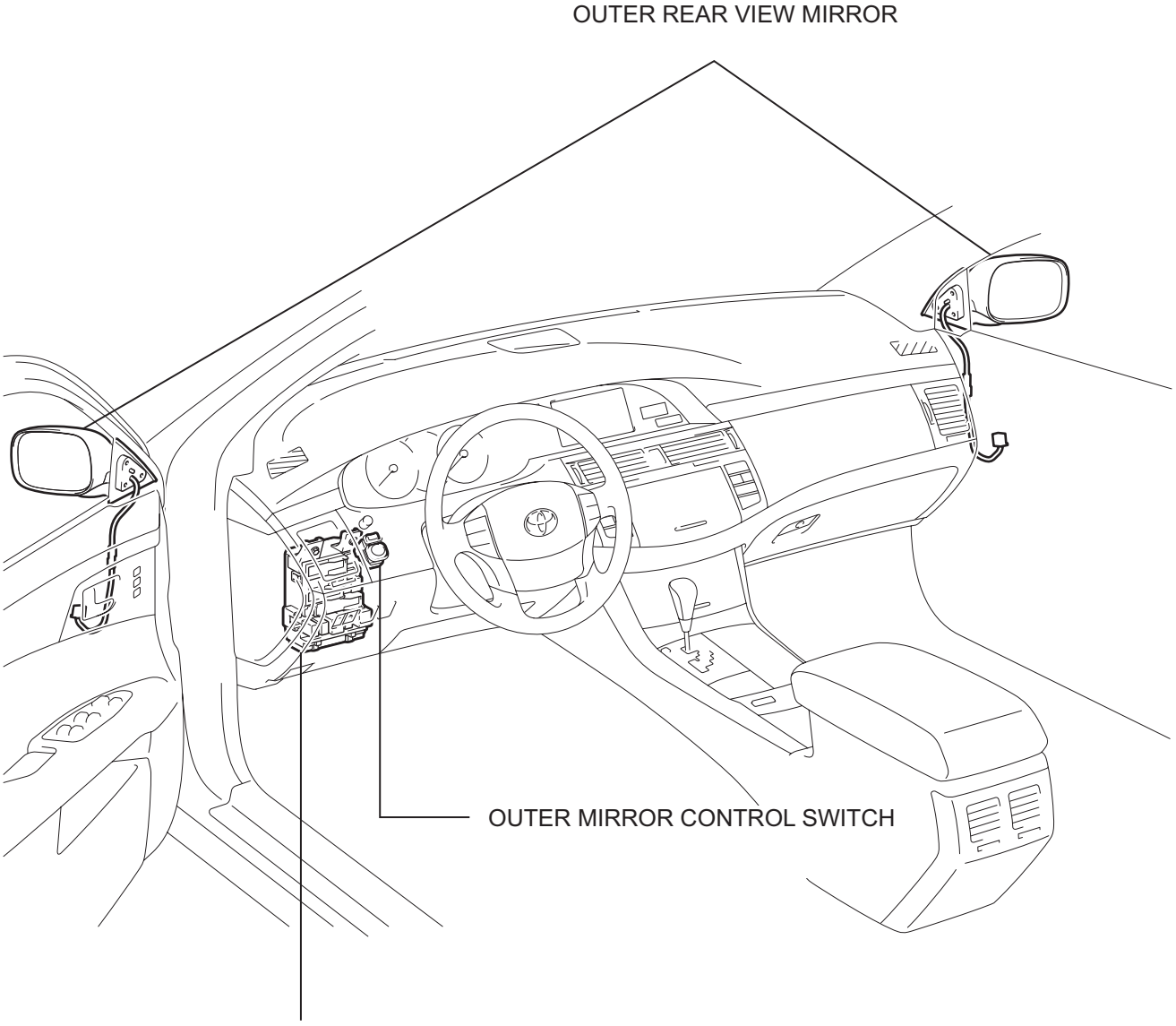

SYSTEM DIAGRAM

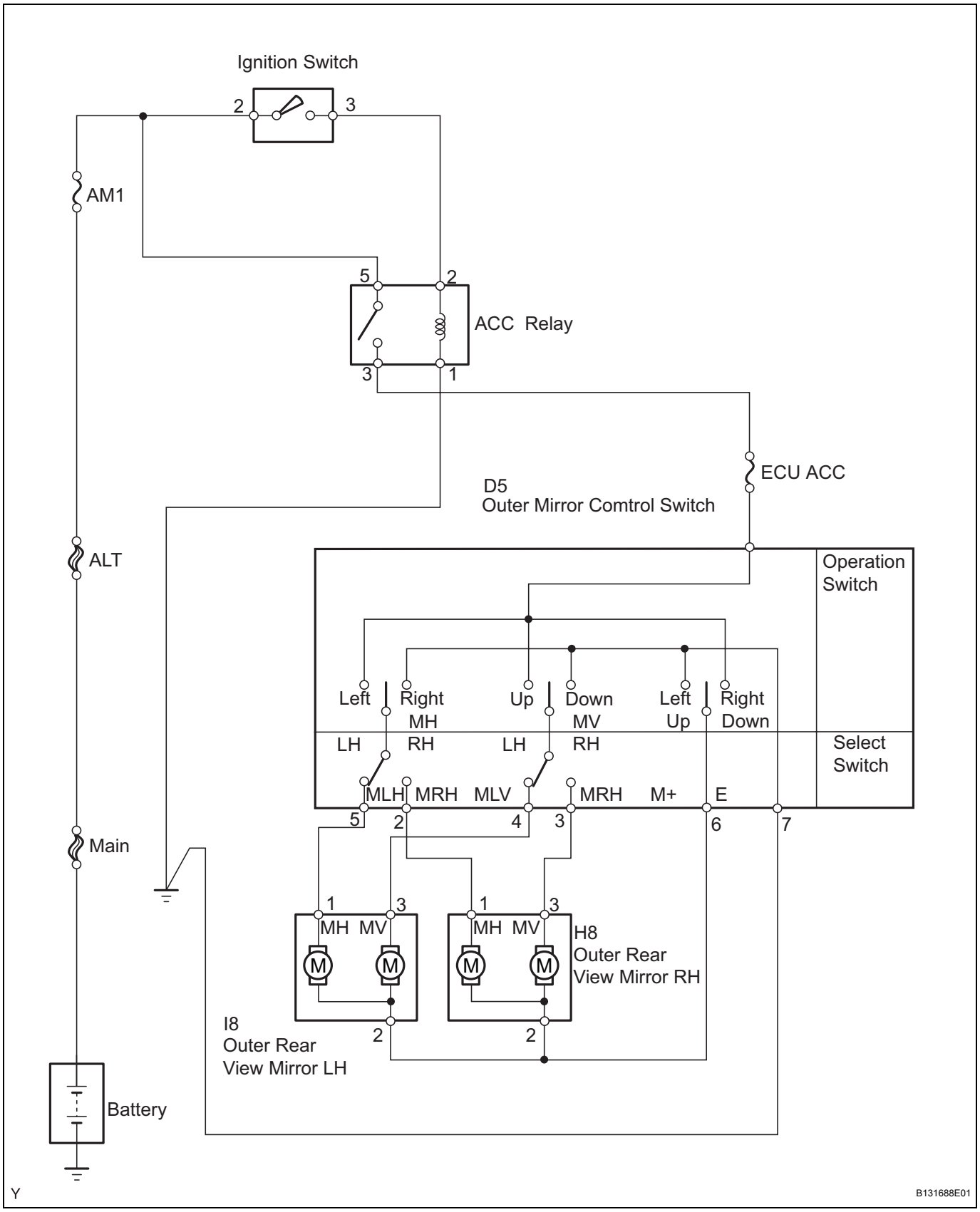

MI

PROBLEM SYMPTOMS TABLE

POWER MIRROR CONTROL SYSTEM

Symptom	Suspected area	See page
Mirror does not operate	1. Outer mirror control switch	MI-40
	2. Outer rear view mirror assembly	-
	3. Wire harness	-
Mirror operates abnormally	1. Outer mirror control switch	MI-40
	2. Outer rear view mirror assembly	-
	3. Wire harness	-

INNER REAR VIEW MIRROR

COMPONENTS

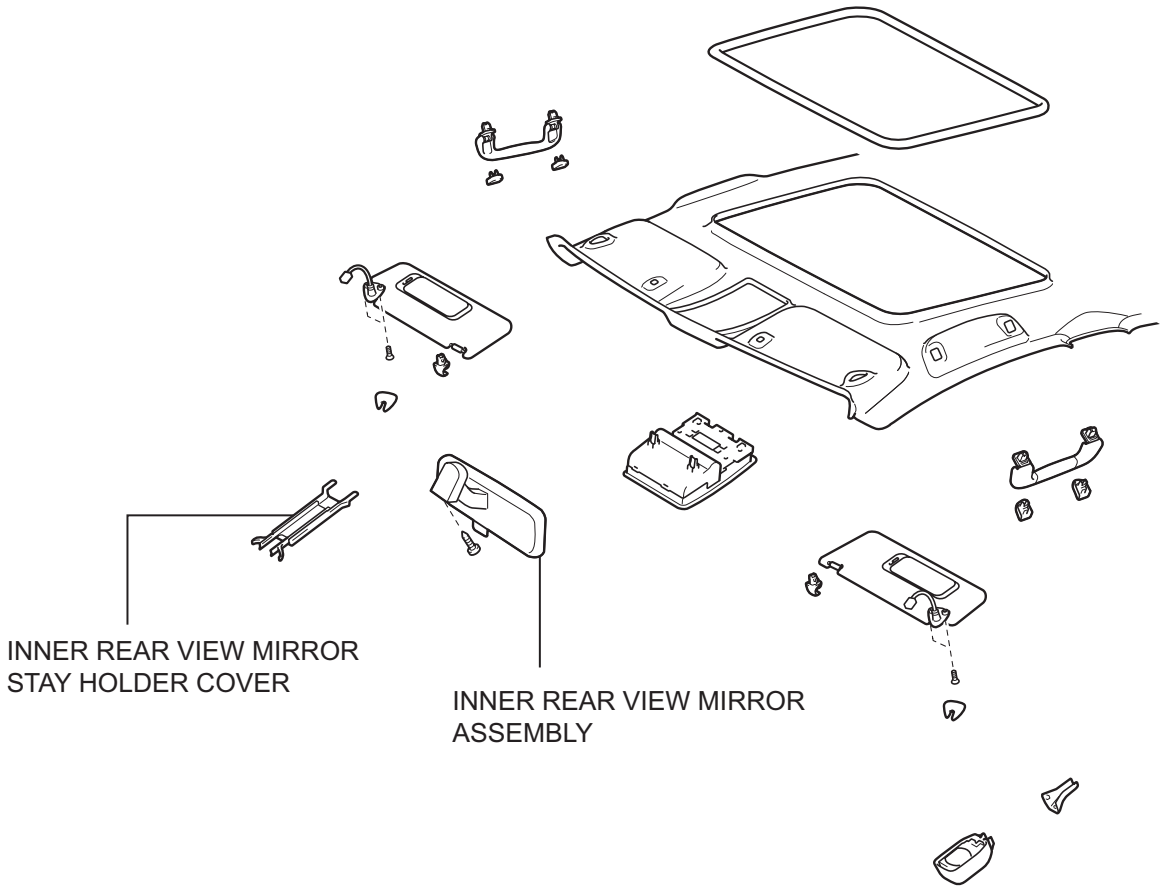

P

B115053E03

CALIBRATION

1. SELECT COMPASS DISPLAY MODE

(a) The comp switch allows you to select the Display or Non-display mode of the compass.

2. SET ZONE

(a) Deviation between the "magnetic north" and "actual north" differs depending on the location. therefore, adjustment of the magnetism is required. Because the magnetic condition differs depending on the area where the vehicle is used, it is necessary for each user to set the zone (Refer to Compass Zone Map). The zone setting can be changed using the comp switch of the inner mirror.

3. PERFORM CALIBRATION

(a) Because each vehicle has its own magnetic field, calibration should be performed for each individual vehicle. This compass function is used when storing the record of the vehicle's magnetic field.

4. WHEN COMPASS IS MAGNETIZED:

(a) A compass could be magnetized during shipping by vessels or freight cars. therefore, make sure to perform calibration and ensure that calibration is performed properly before delivery. If this cannot be done (cannot be completed in spite of driving around several times), it may be caused by magnetization. Demagnetize the vehicle using a demagnetizer and perform calibration again.

5. SET COMPASS

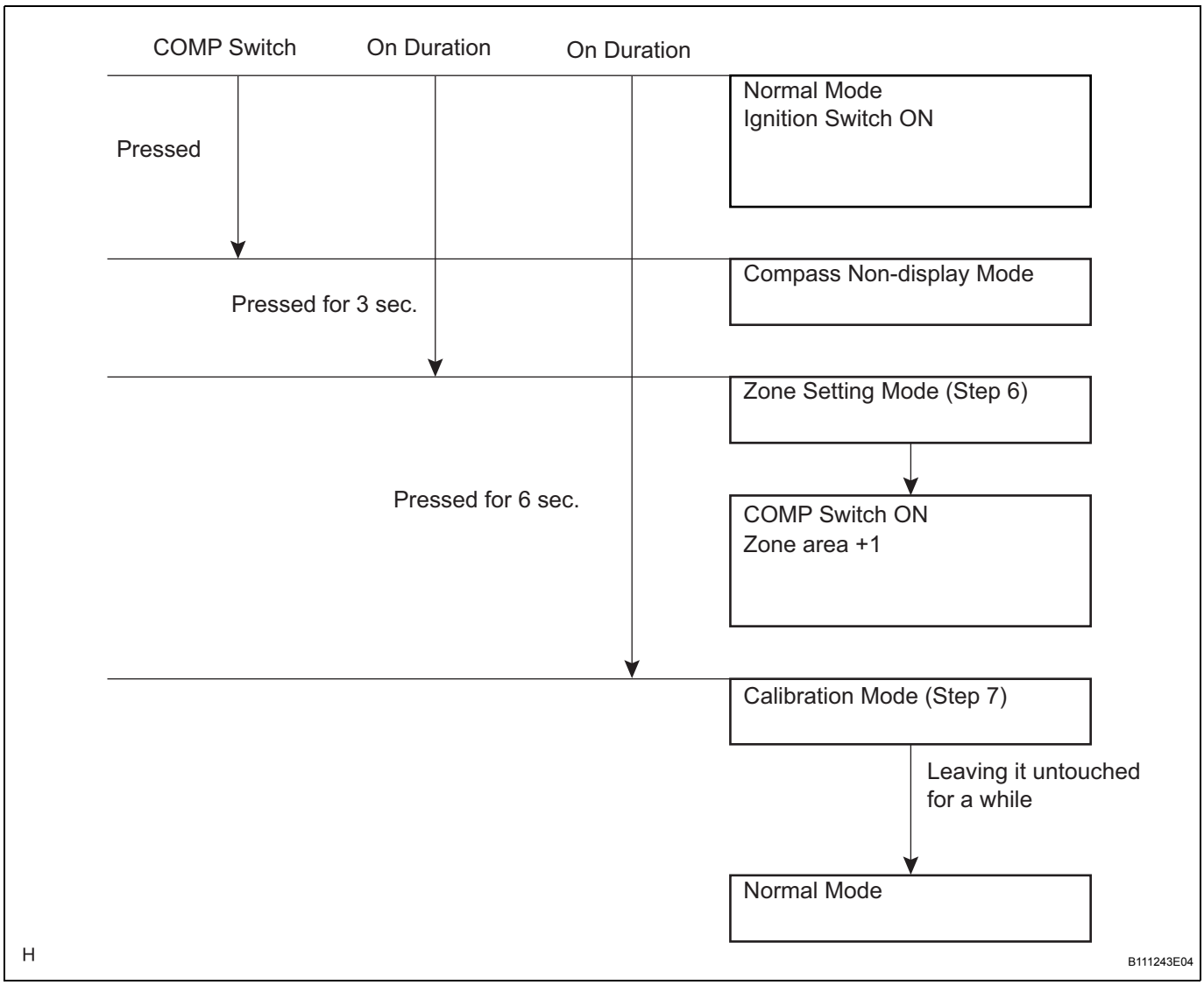

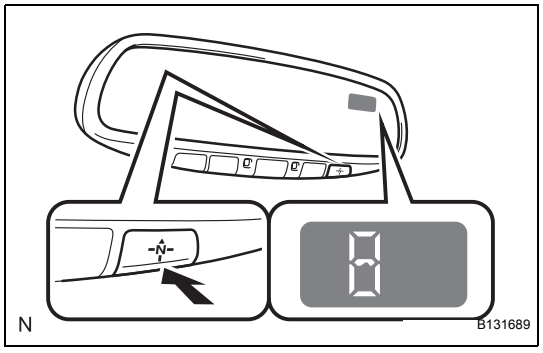

6. ZONE SETTING MODE

(a) Pressing the comp switch for 3 seconds in the normal mode will activate the zone setting mode. A number (1 - 15) is displayed on the compass display.
HINT:
In the initial state, "8" is displayed.

(b) The displayed number increases + 1 every time the comp switch is pressed. Referring to the map, check the number for the area where the vehicle will be used and set the zone number.

(c) Leave it untouched for several seconds after setting and check that the compass display shows an azimuthal direction (N, NE, E, SE, S, SW, W or NW) or "C".

MI

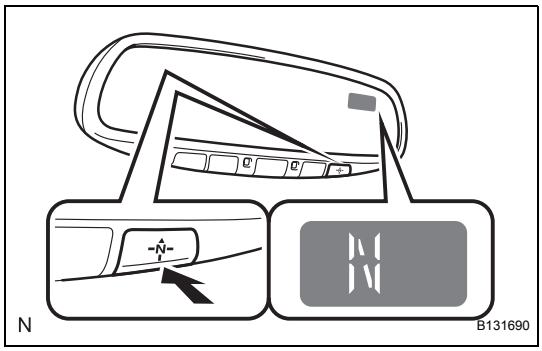

7. CALIBRATION SETTING MODE

(a) Pressing the comp switch for 6 seconds in the normal mode will activate the calibration setting mode. "C" is displayed on the compass display.

(b) Drive the vehicle at a slow speed of 8 km/h (5mph) or less in the circular direction.

(c) Driving around the circle 1 to 3 times will display the azimuthal direction on the display, completing the calibration.

HINT:

After the calibration is completed, it is not necessary to perform the above procedures unless the magnetic field strength is drastically changed. If this happens, the azimuthal display will be changed to "C".

(d) The zone setting numbers are as follows:

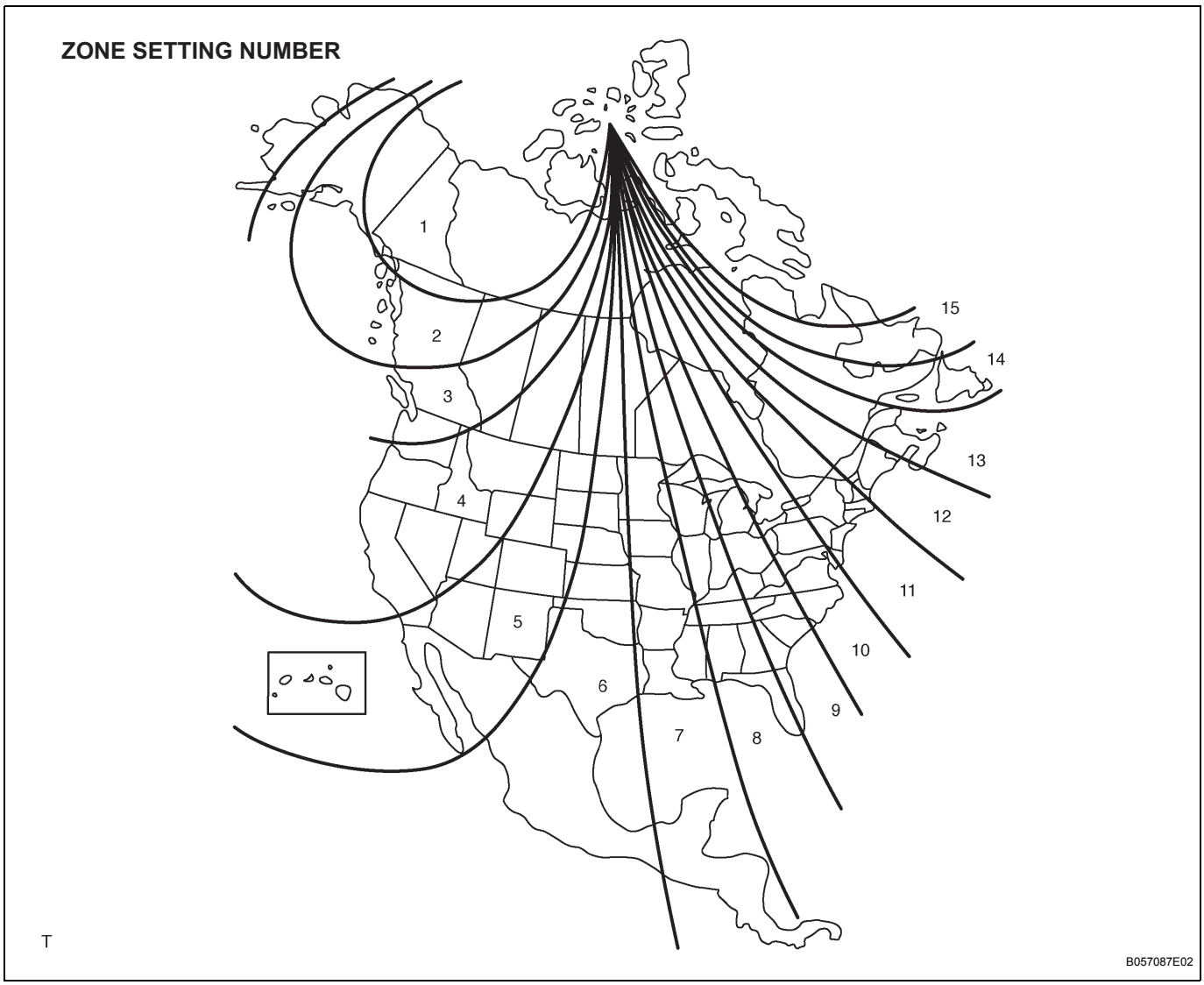

MI

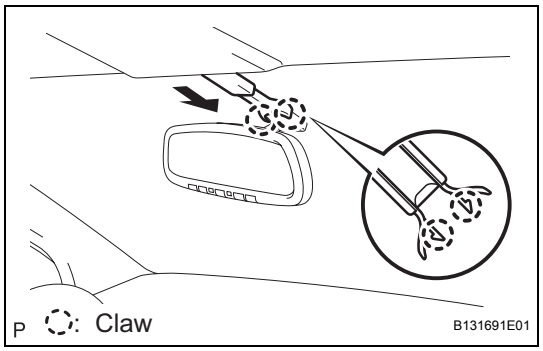

REMOVAL

1. REMOVE INNER REAR VIEW MIRROR STAY HOLDER COVER

(a) Release the 2 claws and remove the rain sensor cover.

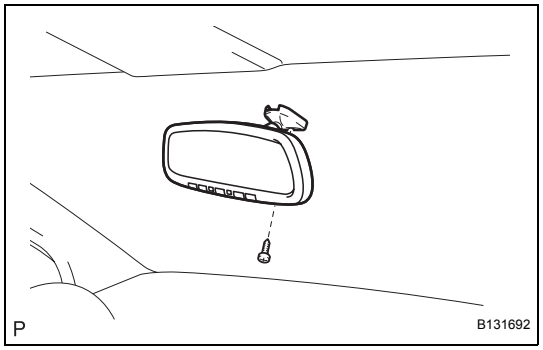

2. REMOVE INNER REAR VIEW MIRROR ASSEMBLY

(a) Remove the screw.
(b) Remove the inner rear view mirror cover.
(c) Disconnect the connector.
(d) Remove the inner rear view mirror assembly.

INSPECTION

1. INSPECT INNER REAR VIEW MIRROR ASSEMBLY

(a) Inspect operation of the electron chromic inner mirror.
  (1) Connect the positive (+) lead from the battery to terminal 6, 10 and the negative (-) lead to terminal 3.
  (2) Attach black colored tape to the forward sensor to prevent it from sensing.
  (3) Light up the mirror with an electric light, and check that the mirror surface changes from bright to dark.
  If the result is not as specified, replace the mirror assembly

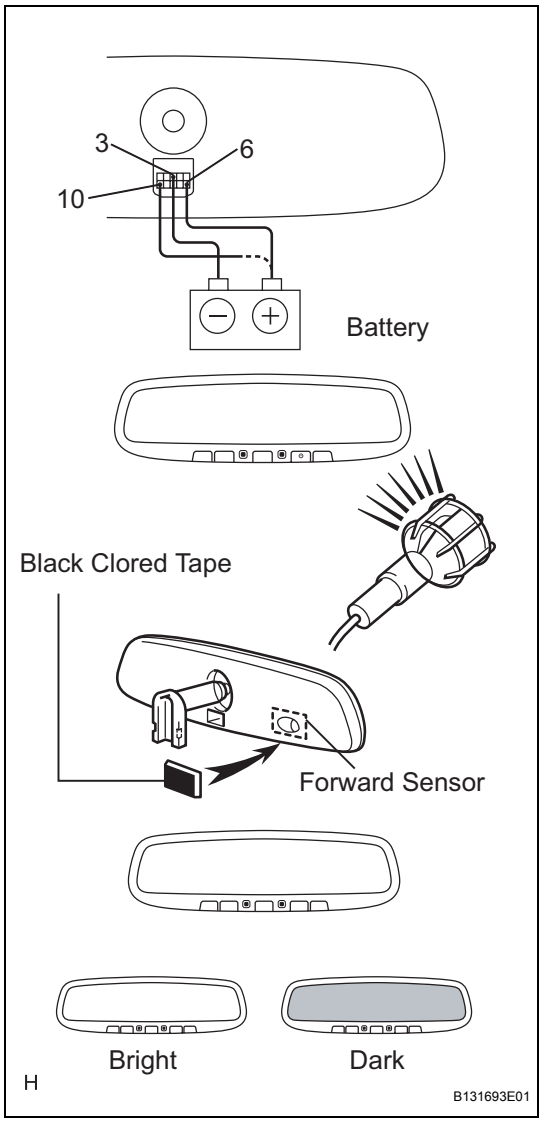

MI

INSTALLATION

1. **INSTALL INNER REAR VIEW MIRROR ASSEMBLY**
2. **INSTALL INNER REAR VIEW MIRROR STAY HOLDER COVER**

OUTER REAR VIEW MIRROR

COMPONENTS

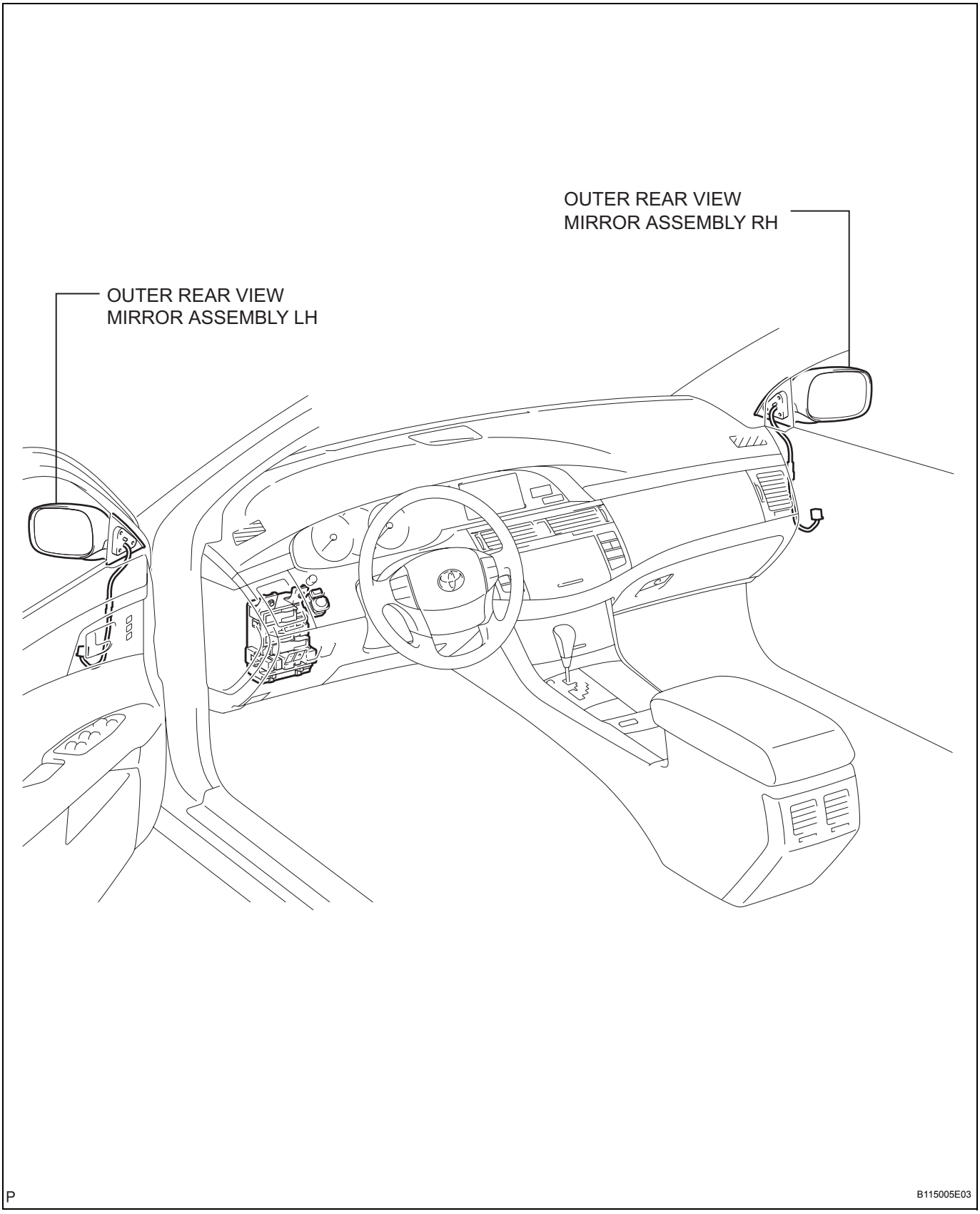

REMOVAL

HINT:
- Use the procedures for the RH side and LH side.
- The procedures listed below are for the LH side.

1. REMOVE OUTER REAR VIEW MIRROR ASSEMBLY LH

2. REMOVE OUTER REAR VIEW MIRROR LH

(a) Tape the lower part of outer mirror body with protection tape.

(b) Using a roof-moulding remover, disengage the 2 claws at the upper part of the mirror.

(c) Pull out the outer rear view mirror.

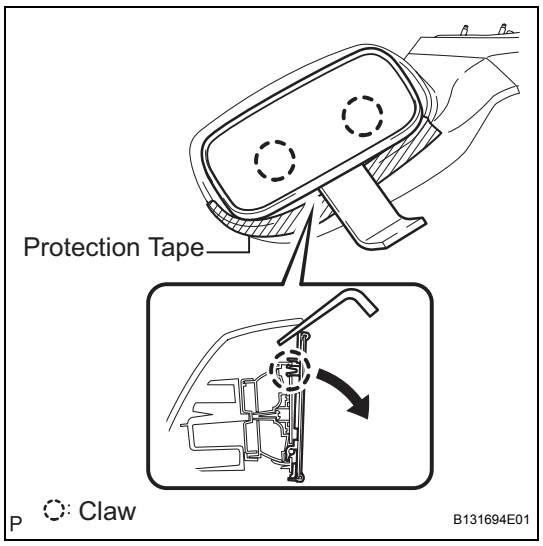

INSPECTION

1. INSPECT OUTER REAR VIEW MIRROR ASSEMBLY LH

(a) Inspect outer mirror operation .

(1) Disconnect the I8 connector.

(2) Apply battery voltage and check operation of the mirror face.

Standard

Measurement Condition	Mirror Operation
Battery positive (+) → I8-3 (MV) Battery positive (-) → I8-2 (M+)	Turns upward (A)
Battery positive (+) → I8-2 (M+) Battery positive (-) → I8-3 (MV)	Turns downward (B)
Battery positive (+) → I8-2 (M+) Battery positive (-) → I8-1 (MH)	Turns left (C)
Battery positive (+) → I8-1 (MH) Battery positive (-) → I8-2 (M+)	Turns right (D)

(b) Inspect outer mirror heater operation.

(1) Apply battery voltage and check operation of the mirror heater.

HINT:

While using the battery during inspection, do not bring the positive and negative tester probes too close to each other as a short circuit may occur.

If the result is not as specified, replace the mirror assembly

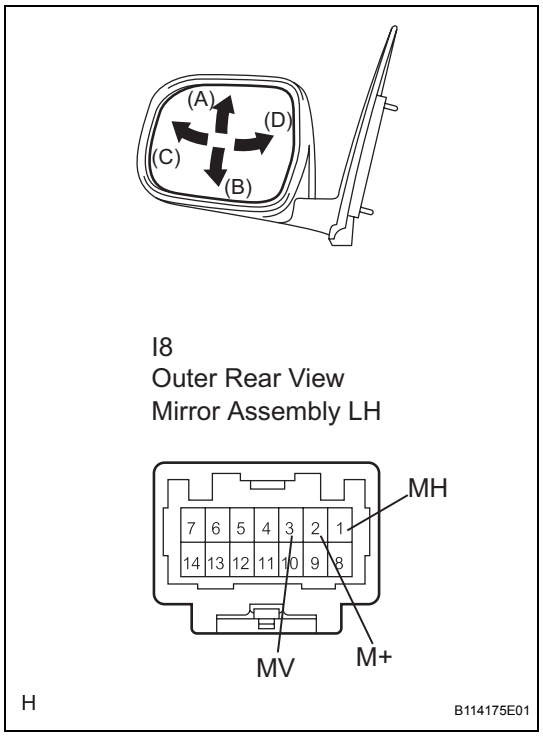

MI

OK

Measurement Condition	Specified Condition
Battery positive (+) → Terminal I8-6 (HTR+) Battery negative (-) → Terminal I8-13 (HTR-)	Mirror becomes warm

(c) Inspect electrochromic outer mirror operation.
(1) Apply battery voltage and check operation of the mirror, as shown in the table and illustration.

Standard

Measurement Condition	Mirror Operation
Battery positive (+) → Terminal 7 (EC+) Battery positive (-) → Terminal 14 (EC-)	Mirror surface changes to dark

If the result is not as specified, replace the mirror assembly.

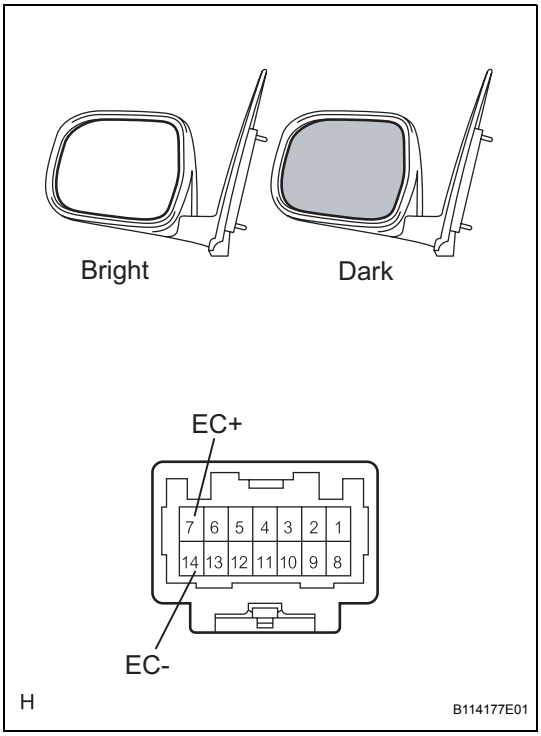

2. INSPECT OUTER REAR VIEW MIRROR ASSEMBLY RH

(a) Inspect outer mirror operation.
(1) Disconnect the H8 mirror connector.
(2) Apply battery voltage and check operation of the mirror face.

Standard

Measurement Condition	Mirror Operation
Battery positive (+) → I8-3 (MV) Battery positive (-) → I8-2 (M+)	Turns upward (A)
Battery positive (+) → I8-2 (M+) Battery positive (-) → I8-3 (MV)	Turns downward (B)
Battery positive (+) → I8-2 (M+) Battery positive (-) → I8-1 (MH)	Turns left (C)
Battery positive (+) → I8-1 (MH) Battery positive (-) → I8-2 (M+)	Turns right (D)

(b) Inspect outer mirror heater operation.
(1) Apply battery voltage and check operation of the mirror heater.
HINT:
While using the battery during inspection, do not bring the positive and negative tester probes too close to each other as a short circuit may occur.

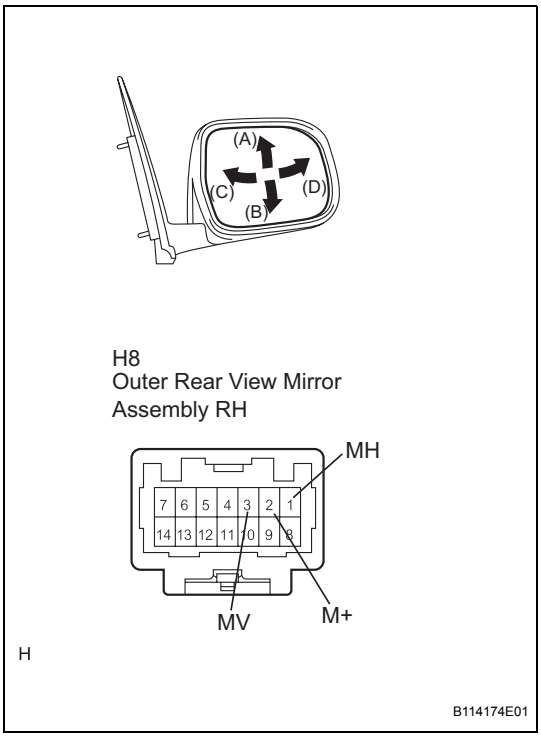

MI

OK:

Measurement Condition	Specified Condition
Battery positive (+) → Terminal I8-6 (HTR+) Battery negative (-) → Terminal I8-13 (HTR-)	Mirror becomes warm

If the result is not as specified, replace the mirror assembly.

(c) Inspect electrochromic outer mirror operation.
(1) Apply battery voltage and check operation of the mirror, as shown in the table and illustration.
Standard

Measurement Condition	Mirror Operation
Battery positive (+) → Terminal 7 (EC+) Battery positive (-) → Terminal 14 (EC-)	Mirror surface changes to dark

If the result is not as specified, replace the mirror assembly.

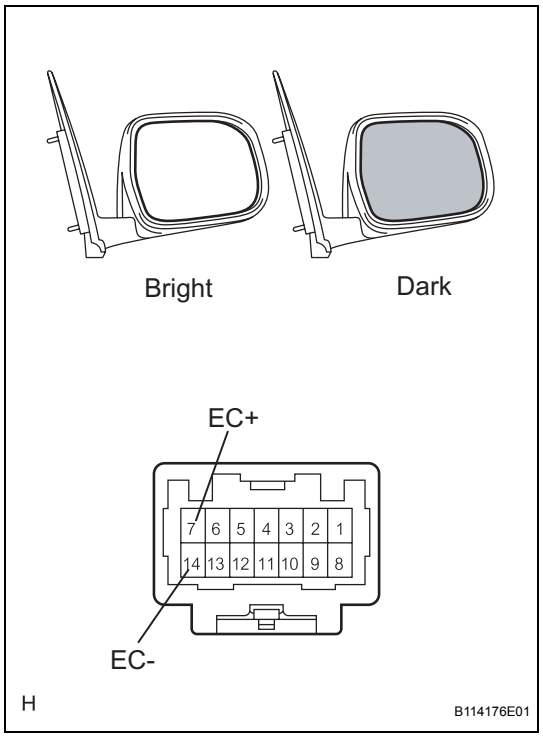

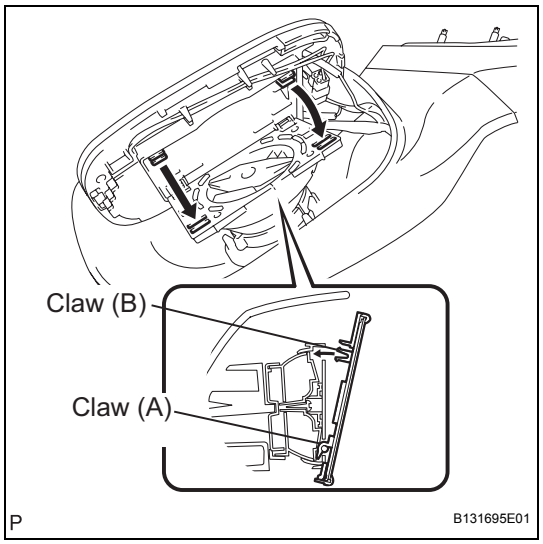

INSTALLATION

1. INSTALL OUTER REAR VIEW MIRROR LH

(a) Insert claws (A) at in the lower part of of the mirror into the actuator holes.
(b) Set the mirror in the actuator.
(c) Securely engage 2 claws (B) at the upper part of the mirror.

MI

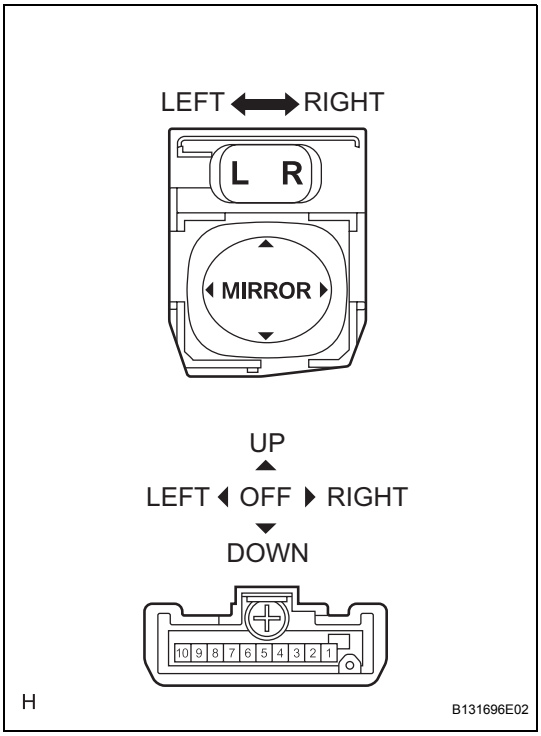

OUTER MIRROR SWITCH

INSPECTION

1. INSPECT OUTER MIRROR SWITCH ASSEMBLY (W/O MEMORY)

(a) Select "L" on the left/right adjustment switch: Check the switch resistance.

Resistance

Tester Connection	Switch Position	Specified Condition
4 - 8	UP	Below 1 Ω
6 - 7	UP	Below 1 Ω
4 - 7	DOWN	Below 1 Ω
6 - 8	DOWN	Below 1 Ω
5 - 8	LEFT	Below 1 Ω
6 - 7	LEFT	Below 1 Ω
5 - 7	RIGHT	Below 1
6 - 8	RIGHT	Below 1 Ω

If the result is not as specified, replace the switch assembly.

(b) Select "R" on the left/right adjustment switch: Check the switch resistance.

Resistance

Tester Connection	Switch Position	Specified Condition
3 - 8	UP	Below 1 Ω
6 - 7	UP	Below 1 Ω
3 - 7	DOWN	Below 1 Ω
6 - 8	DOWN	Below 1 Ω
2 - 8	LEFT	Below 1 Ω
6 - 7	LEFT	Below 1 Ω
2 - 7	RIGHT	Below 1
6 - 8	RIGHT	Below 1 Ω

If the result is not as specified, replace the switch assembly.

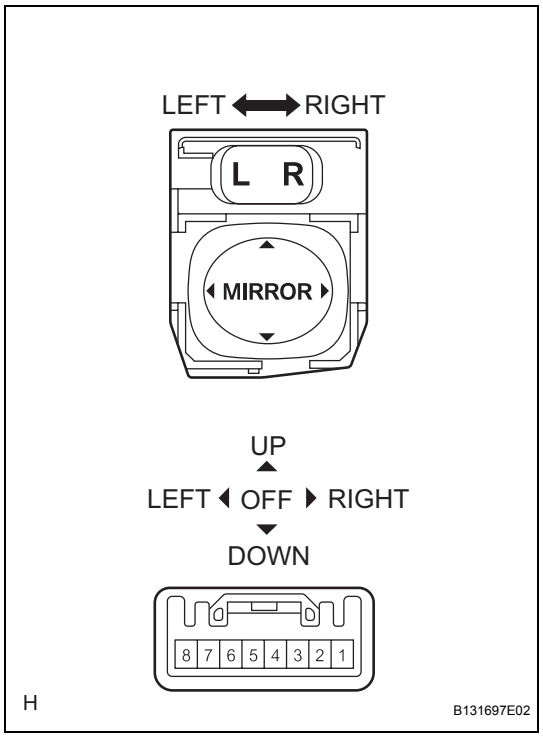

2. INSPECT OUTER MIRROR SWITCH ASSEMBLY (W/ MEMORY)

(a) Check the mirror switch resistance.

Resistance

Tester Connection	Switch Position	Specified Condition
2 - 3	OFF	10 Ω or higher
2 - 3	UP	100 Ω
2 - 3	DOWN	250 Ω
2 - 3	LEFT	470 Ω
2 - 3	RIGHT	800 Ω

If the result not as specified, replace the switch assembly.

(b) Check the left/right adjustment switch resistance.

Standard

Tester Connection	Switch Position	Specified Condition
1 - 2	L	100 Ω
1 - 2	R	10 Ω or less

MULTIPLEX COMMUNICATION SYSTEM

PRECAUTION

1. INITIALIZATION

NOTICE:
When disconnecting the negative (-) battery cable, initialize the following system after the cable is reconnected.

System Name	See procedure
Power Window Control	IN-29
Sliding Roof System	IN-29

2. EXPRESSIONS OF IGNITION SWITCH

(a) The type of ignition switch used on this model differs according to the specifications of the vehicle. The expressions listed in the table below are used in this section.

Switch Type / Expression	Ignition Switch (position)	Engine Switch (condition)
Ignition Switch off	LOCK	Off
Ignition Switch on (IG)	ON	On (IG)
Ignition Switch on (ACC)	ACC	On (ACC)
Engine Start	START	Start

F053330E06

PARTS LOCATION

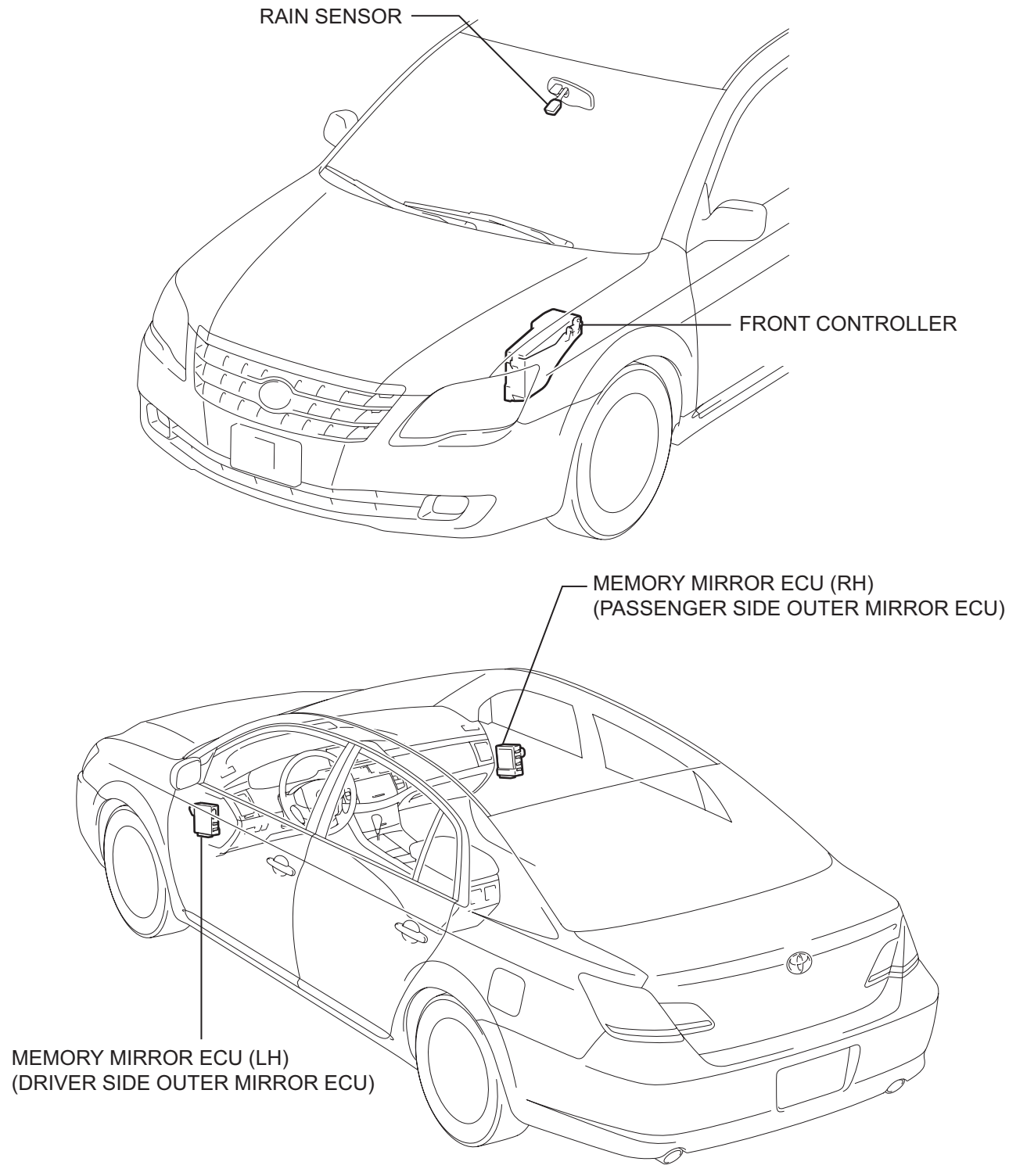

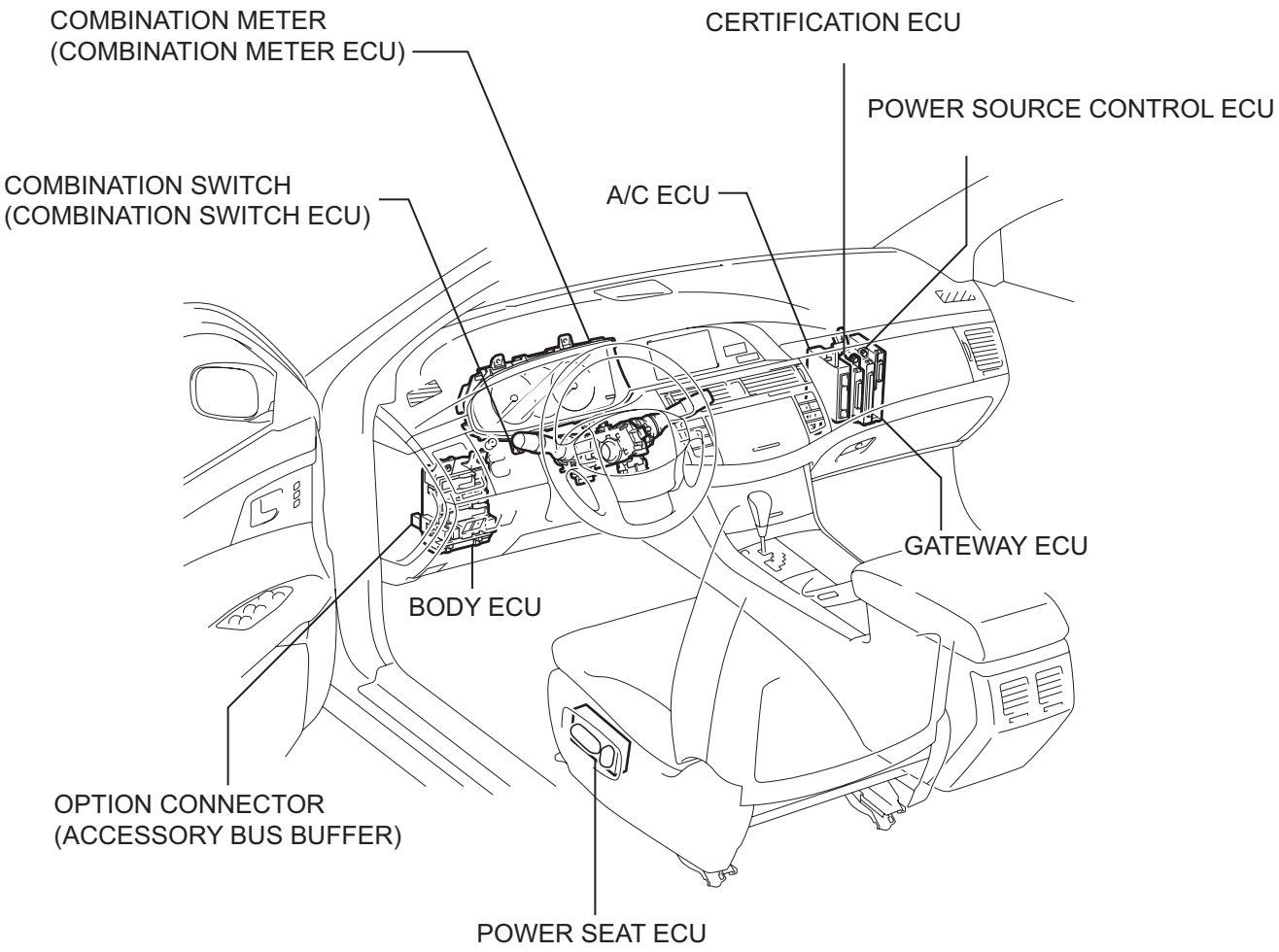

P

C114958E01

MP

SYSTEM DIAGRAM

Item	Details
Number of BEAN connected ECUs*1	12
Number of CAN connected ECUs*1	7
Number of AVC-LAN connected ECUs*1	6
Gateway function between BEAN and diagnosis	Gateway ECU
Gateway function between BEAN and AVC-LAN	Gateway ECU
Gateway function between BEAN and CAN	Gateway ECU
ECU in charge of vehicle customization information	Gateway ECU
Protocol	CAN, BEAN and AVC-LAN

HINT:
*1: Optional ECUs are also included.

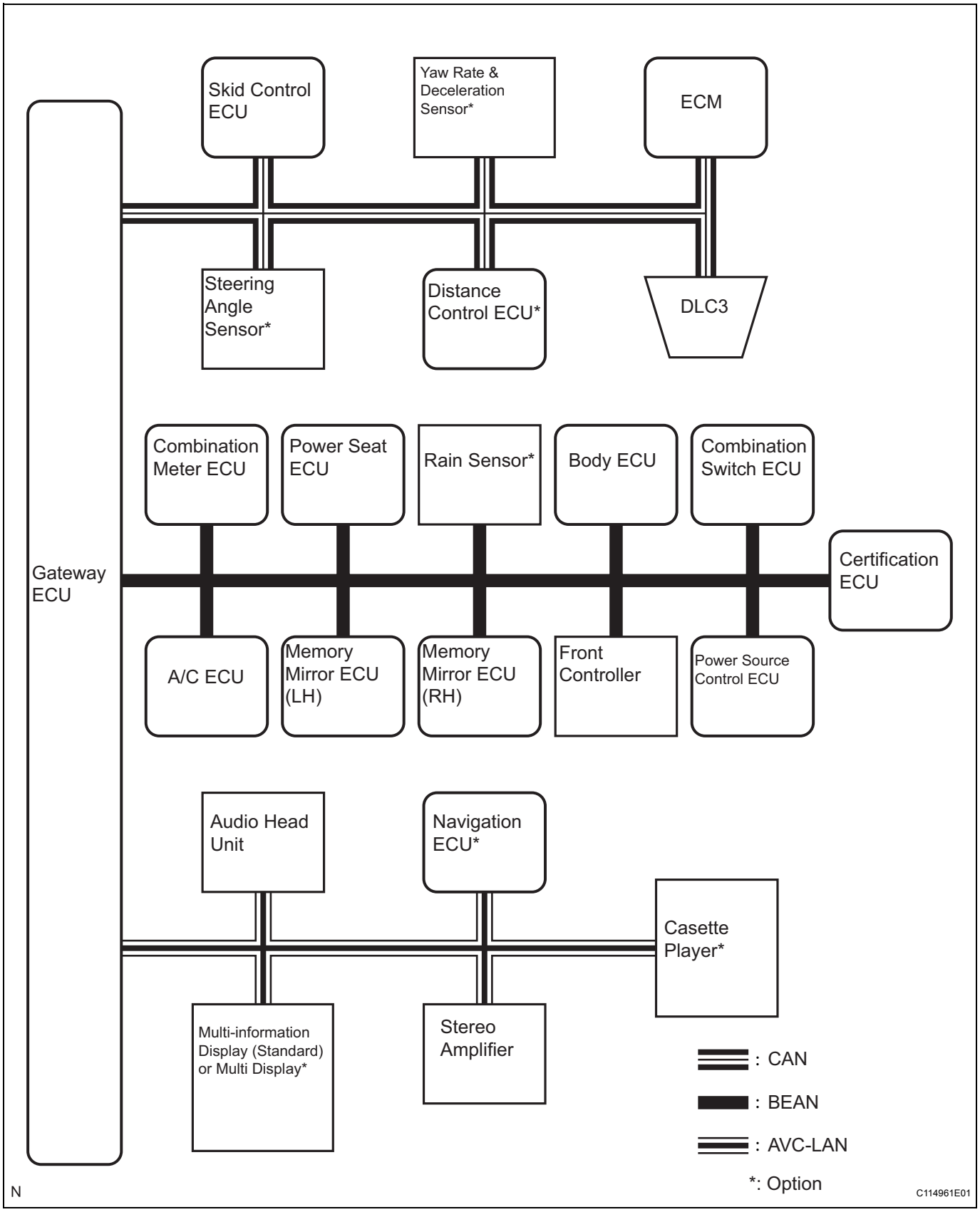
Skid Control ECU
Yaw Rate & Deceleration Sensor*
ECM
Steering Angle Sensor*
Distance Control ECU*
DLC3
Combination Meter ECU
Power Seat ECU
Rain Sensor*
Body ECU
Combination Switch ECU
Gateway ECU
Certification ECU
A/C ECU
Memory Mirror ECU (LH)
Memory Mirror ECU (RH)
Front Controller
Power Source Control ECU
Audio Head Unit
Navigation ECU*
Casette Player*
Multi-information Display (Standard) or Multi Display*
Stereo Amplifier
: CAN
: BEAN
: AVC-LAN
*: Option
N
C114961E01

MP

SYSTEM DESCRIPTION

1. MULTIPLEX COMMUNICATION SYSTEM BASICS

(a) The AVALON multiplex communication uses serial communication, which converts multiple pieces of information into serial communication data. As a result, they can be transmitted through a single communication wire.

▶ Conceptual Drawing ◀

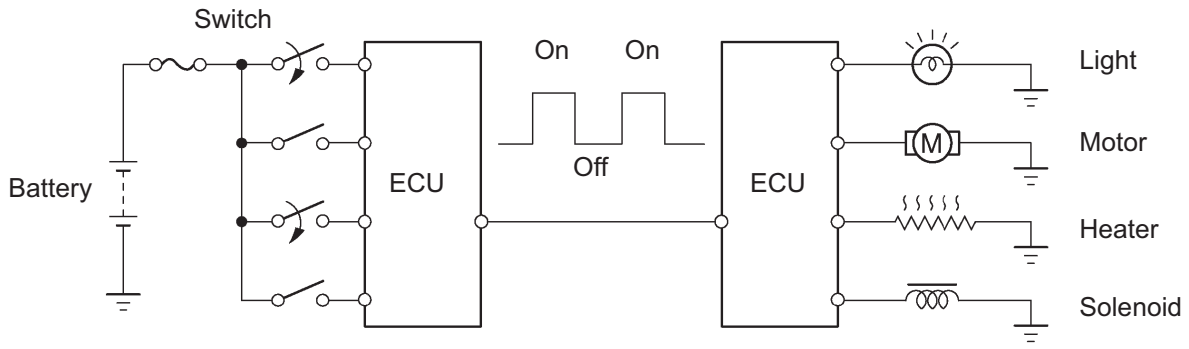

Serial Communication

Y B079348E02

(b) Serial communication data consist of bits and frames. A bit is a basic unit that represents one piece of information. A bit is represented by the binary values "0" or "1". A frame is a body of data that is transmitted as a packet. A frame contains a "header" that indicates the beginning of the data and an "end" message that indicates the end of the data.



Y B078766E02

MP

(c) Based on serial communication, various ECUs are connected on a network to exchange various pieces of information. Such a system is called a multiplex communication system.

(1) The CAN uses a multi star style bus connection. The 3 junction connectors are connected by a main bus line. Junction connectors communicate with ECUs using a sub bus line.

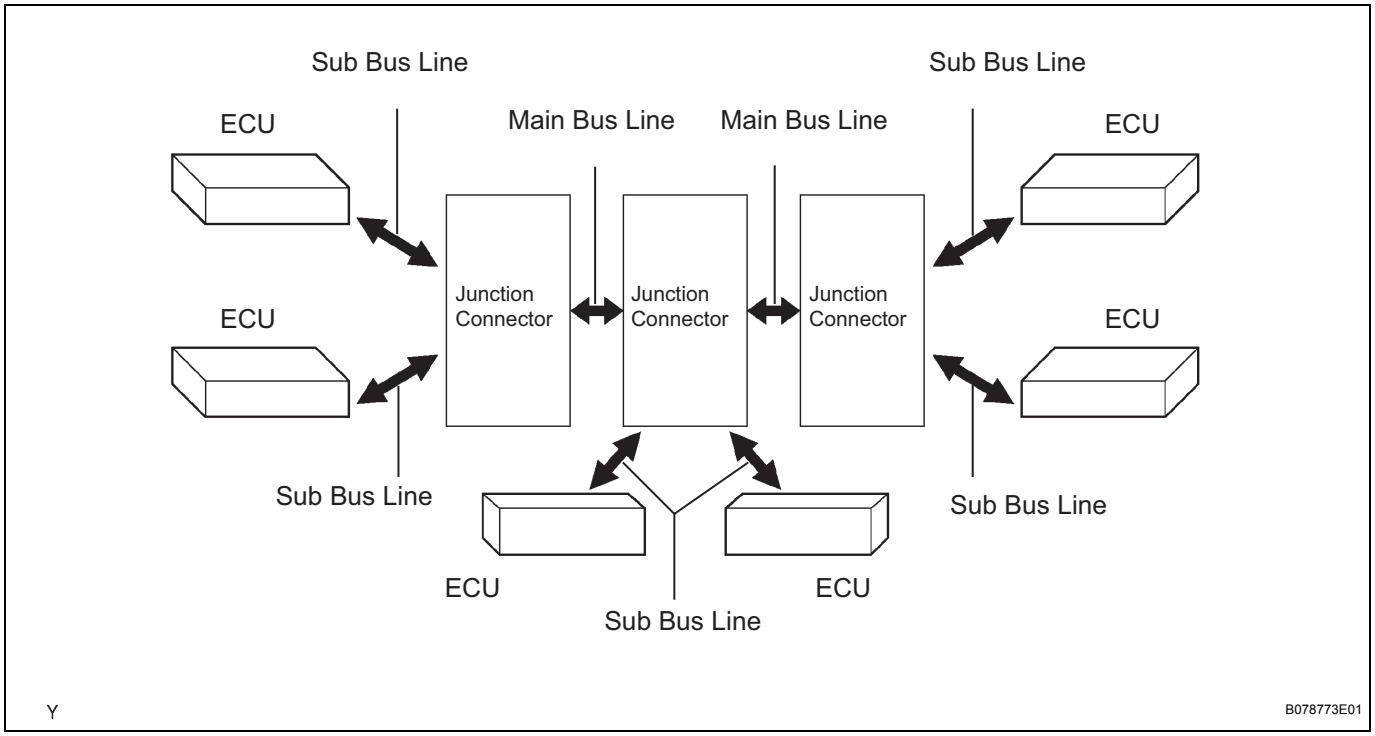

(2) The BEAN uses ring and bus styles of networks to connect ECUs. This style of connection is called a daisy chain. In a daisy chain, communication can be maintained even if there is an area that has an open circuit.

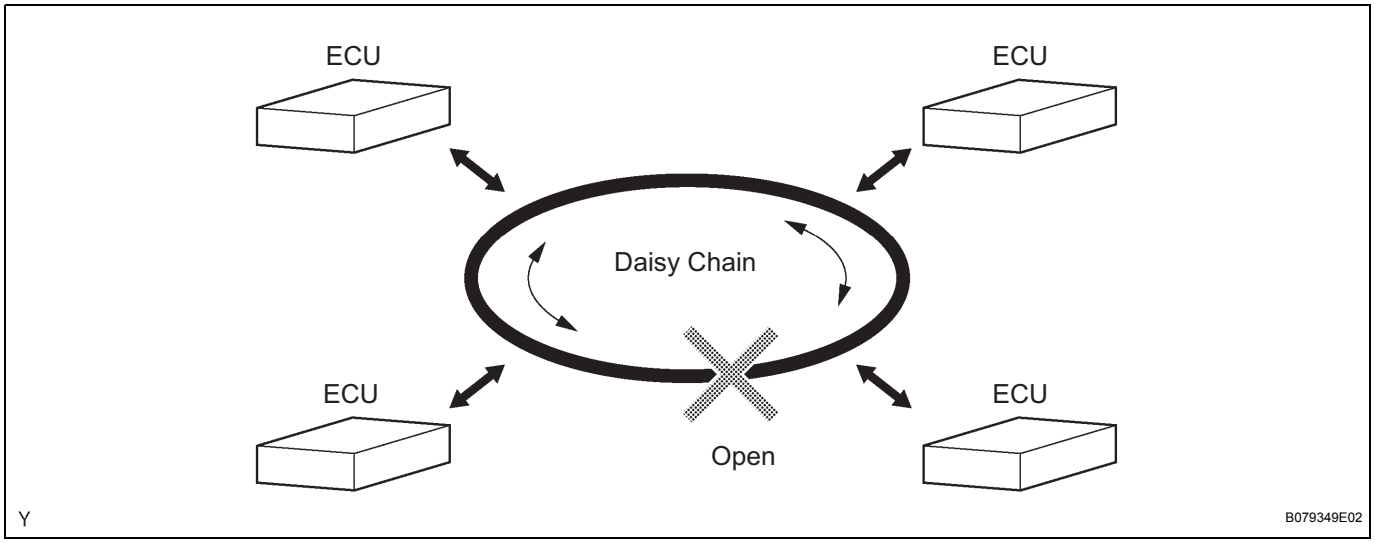

MP

(3) The AVC-LAN uses a star configuration, which is centered on the multi display or audio head unit.

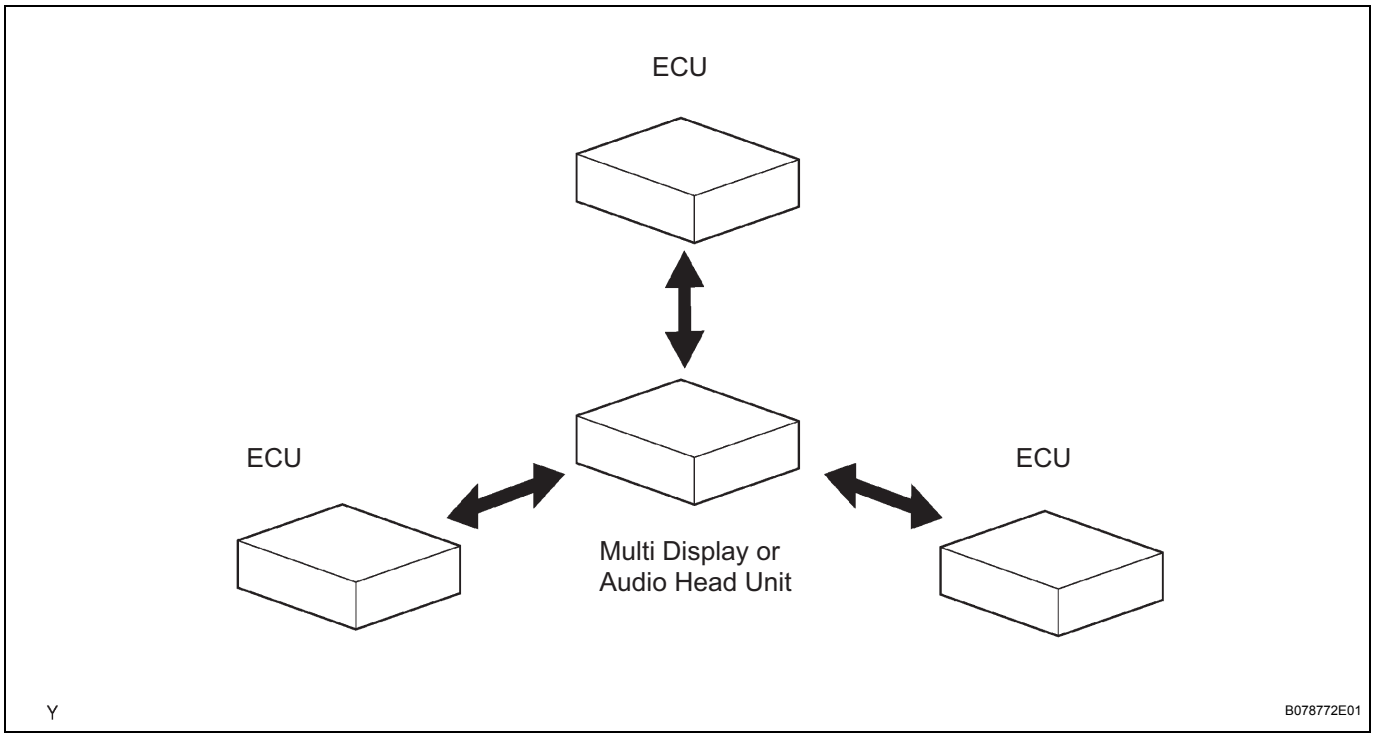

(d) Differences between CAN, BEAN and AVC-LAN

(1) Protocols, which are rules for establishing data communication, differ between the CAN, BEAN and the AVC-LAN. If ECUs use different types of data such as communication speed, communication wire, and signals, they will be unable to communicate with each other. Therefore, protocols (rules) must be established among them.

Control	Driving Control System	Body Electrical Control System	Body Electrical Control System
Protocol	CAN (ISO Standard)	BEAN (TOYOTA Original)	AVC-LAN (TOYOTA Original)
Communication Speed	500 k bps* (Max. 1 M bps)	Max. 10 k bps*	Max. 17. 8 k bps*
Communication Wire	Twisted-pair Wire	AV Single Wire	Twisted-pair Wire
Drive Type	Differential Voltage Drive	Single Wire Voltage Drive	Differential Voltage Drive
Data Length	1 to 8 Byte (Variable)	1 to 11 Byte (Variable)	0 to 32 Byte (Variable)

MP

HINT:
*: The abbreviation "bps" stands for "bits per second" (the number of bits that can be transmitted per second).

(2) A single, Automobile Vinyl (AV) wire is used for BEAN communication. A twisted-pair wire is used for CAN and AVC-LAN communication.

Communication Wire	Outline
AV Single Wire	Lightweight single communication wire that consists of single core line surrounded by insulation. Voltage is applied to this line in order to drive communication. This system is called a "Single Wire Voltage Drive".

Communication Wire	Outline
• Twisted-pair Wire for AVC-LAN • Twisted-pair Wire for CAN	Pair of lines Twisted together and covered with insulation. Communication is driven by applying positive (+) and negative (-) voltage to the 2 lines in order to send a single signal. This system, which is called "Differential Voltage Drive", can reduce noise.

▶ Single Wire Voltage Drive ◀

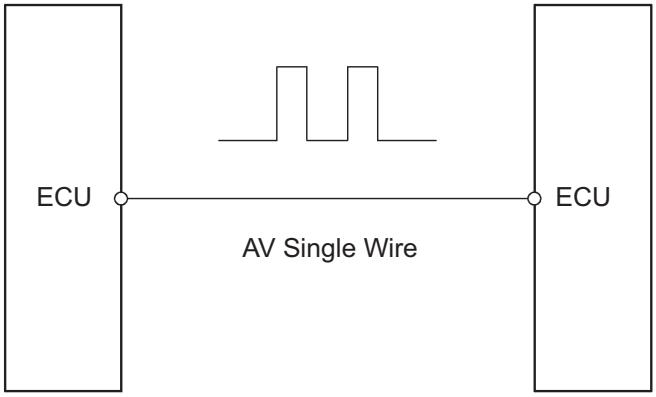

▶ Differential Voltage Drive ◀

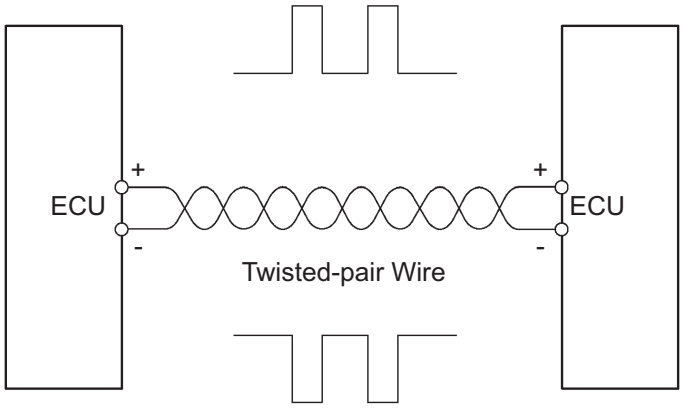

Y

B078778E01

MP

2. NETWORK GATEWAY ECU

(a) The network gateway ECU of the AVALON has the following functions:

Function	Outline
Gateway	Data for respective protocols (CAN, BEAN and AVC-LAN) are arranged differently. Therefore, it is not possible to exchange data between different protocols. For this reason, data arrangement must be converted before transferring data to a communication bus (CAN, BEAN and AVC-LAN). This conversion is called a gateway function. It is preformed by a gateway ECU.

Function	Outline
Diagnosis (only for BEAN)	By connecting an intelligent tester (with CAN VIM) to DLC3 and operating the tester, technicians can access ECUs via the gateway ECU and BEAN communication bus. In this manner, DTCs for BEAN can be output, DATA LIST (for checking ECU data) can be displayed, and ACTIVE TEST (to actuate desired actuator) can be performed.
Customize (only for BEAN)	Customized body electronics system enables control function settings of ECUs to be changed through use of an intelligent tester. However, this system can change settings only of ECUs that belong to the bus in which communication is centered on gateway ECU.

HOW TO PROCEED WITH TROUBLESHOOTING

HINT:
Use this procedure to troubleshoot the multiplex communication system.

1 VEHICLE BROUGHT TO WORKSHOP

NEXT

2 CHECK FOR DTC

(a) Check for DTCs and note any codes that are output.
(b) Delete the DTC.
(c) Recheck for DTCs. Try to prompt the DTC by simulating the original activity that the DTC suggests.

Result

Result	Proceed to
DTC does not reoccur	A
DTC reoccurs	B

B → **Go to step 4**

A

3 OVERALL ANALYSIS AND TROUBLESHOOTING

(a) Terminals of ECU (See page MP-11).

NEXT

4 ADJUST, REPAIR OR REPLACE

NEXT

5 CONFIRMATION TEST

NEXT

END

TERMINALS OF ECU

1. CHECK GATEWAY ECU

(a) Disconnect the E23 ECU connector.

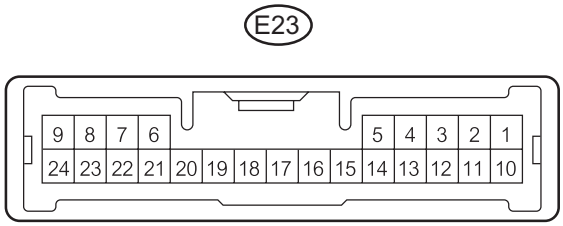

H

C129903E01

(b) Measure the voltage between the specified terminals on the wire harness side connector.

Voltage:

Symbol (Terminal No.)	Wiring Color	Terminal Description	Condition	Specified Condition
BATT (E23-10) - Body ground	B - Body ground	Power supply (Back-up)	Always	10 to 14 V
IG (E23-1) - Body ground	W - Body ground	Power supply (IG)	Ignition switch: OFF → ON (IG)	Below 1 V → 10 to 14 V
ACC (E23-2) - Body ground	R - Body ground	Power supply (ACC)	Ignition switch: OFF → ON (ACC)	Below 1 V → 10 to 14 V

If the values do not conform to the conditions specified, there may be a malfunction on the wire harness side.

(c) Measure the resistance between the specified terminals on the wire harness side connector.

Resistance:

Symbol (Terminal No.)	Wiring Color	Terminal Description	Condition	Specified Condition
GND (E23-24) - Body ground	W-B - Body ground	Ground	Always	Below 1 Ω
MPD1 (E23-3) - Body ground	G - Body ground	MPX line	Always	10 kΩ or higher
MPD2 (E23-12) - Body ground	P - Body ground	MPX line	Always	10 kΩ or higher

If the values do not conform to the conditions specified, there may be a malfunction on the wire harness side.

2. CHECK RAIN SENSOR

(a) Disconnect the O3 ECU connector.

MP

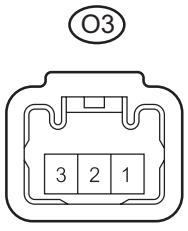

H

C129904E02

(b) Measure the voltage between the specified terminals on the wire harness side connector.

Voltage:

Symbol (Terminal No.)	Wiring Color	Terminal Description	Condition	Specified Condition
SIG (O3-1) - Body ground	V - Body ground	Power supply (IG)	Ignition switch: OFF → ON (IG)	Below 1 V → 10 to 14 V

If the values do not conform to the conditions specified, there may be a malfunction on the wire harness side.

(c) Measure the resistance between the specified terminals on the wire harness side connector.

Resistance:

Symbol (Terminal No.)	Wiring Color	Terminal Description	Condition	Specified Condition
ES (O3-3) - Body ground	W-B - Body ground	Ground	Always	Below 1 Ω
MPX (O3-2) - Body ground	L - Body ground	MPX line	Always	10 kΩ or higher

If the values do not conform to the conditions specified, there may be a malfunction on the wire harness side.

3. CHECK BODY ECU

(a) Disconnect the 1I, 1A, 1F, 1M, 1R and D6 ECU connectors.

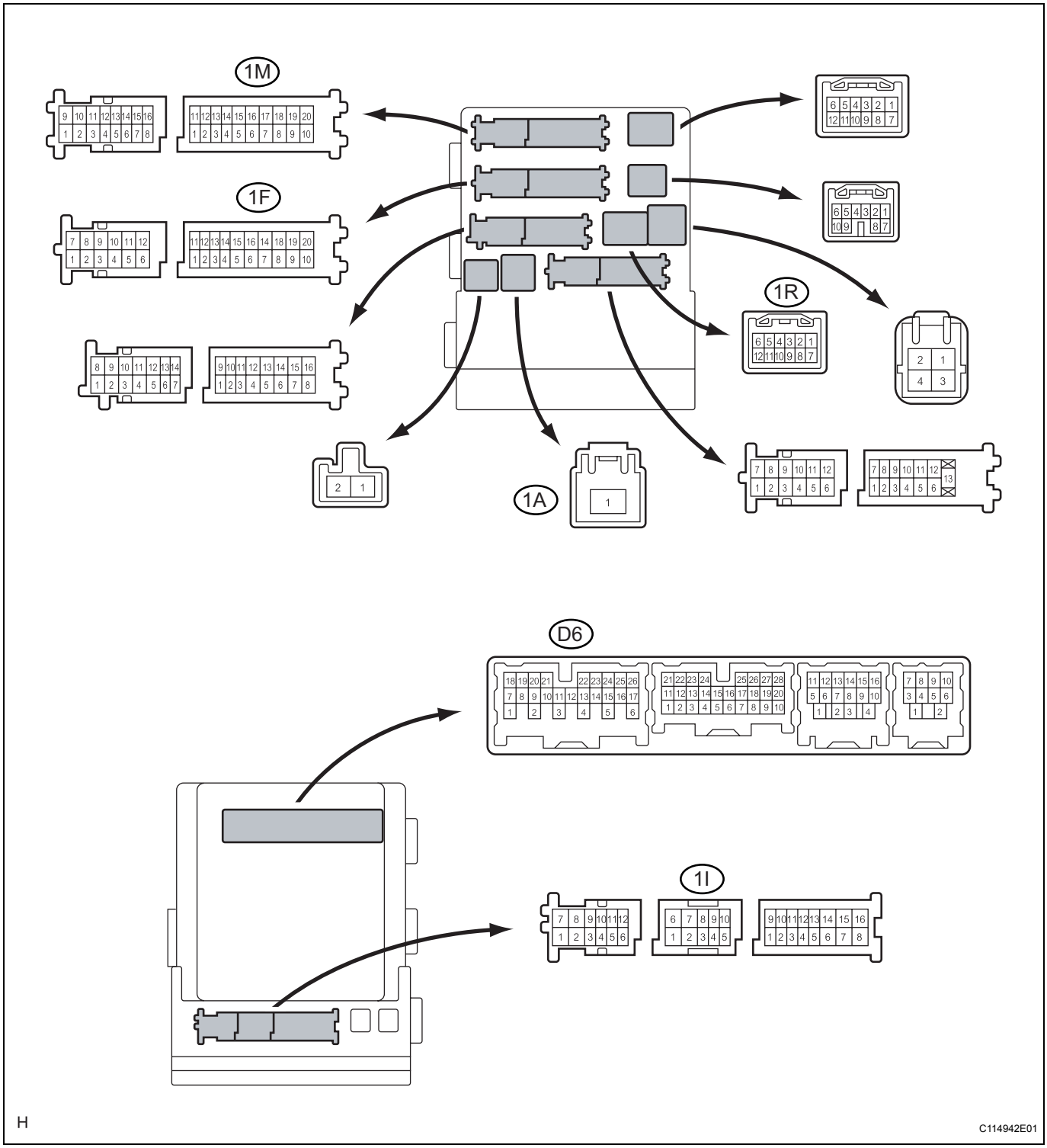

(b) Measure the voltage between the specified terminals on the wire harness side connector.

Voltage:

Symbol (Terminal No.)	Wiring Color	Terminal Description	Condition	Specified Condition
IG (1I-9) - Body ground	LG - Body ground (*1) G - Body ground (*2)	Power supply (IG)	Ignition switch: OFF → ON (IG)	Below 1 V → 10 to 14 V
ACC (1I-3) - Body ground	R - Body ground (*1) O - Body ground (*2)	Power supply (ACC)	Ignition switch: OFF → ON (ACC)	Below 1 V → 10 to 14 V

MP

Symbol (Terminal No.)	Wiring Color	Terminal Description	Condition	Specified Condition
BATB (1A-1) - Body ground	B - Body ground	Power supply (Back-up)	Always	10 to 14 V

(*1): w/ Smart Key System
(*2): w/o Smart Key System
If the values do not conform to the conditions specified, there may be a malfunction on the wire harness side.

(c) Measure the resistance between the specified terminals on the wire harness side connector.

Resistance:

Symbol (Terminal No.)	Wiring Color	Terminal Description	Condition	Specified Condition
GND1 (1F-10) - Body ground	W-B - Body ground	Ground	Always	Below 1 Ω
GND2 (1M-9) - Body ground	W-B - Body ground	Ground	Always	Below 1 Ω
MPX1 (1R-9) - Body ground	B - Body ground	MPX line	Always	10 kΩ or higher
MPX2 (D6-21) - Body ground	BR - Body ground	MPX line	Always	10 kΩ or higher

If the values do not conform to the conditions specified, there may be a malfunction on the wire harness side.

4. CHECK A/C ECU

(a) Disconnect the D37 ECU connector.

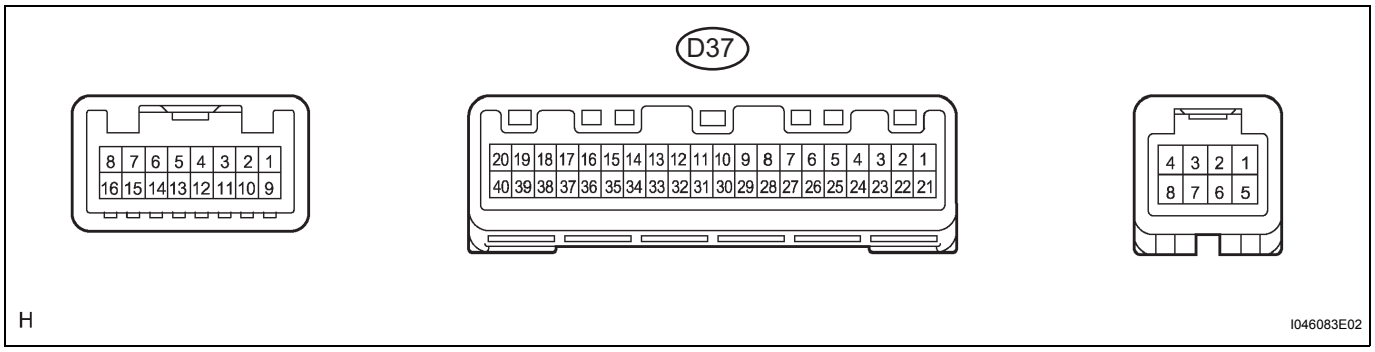

(b) Measure the voltage between the specified terminals on the wire harness side connector.

Voltage:

Symbol (Terminal No.)	Wiring Color	Terminal Description	Condition	Specified Condition
IG+ (D37-21) - Body ground	G - Body ground	Power supply (IG)	Ignition switch: OFF → ON (IG)	Below 1 V → 10 to 14 V
B (D37-1) - Body ground	SB - Body ground	Power supply (Back-up)	Always	10 to 14 V

If the values do not conform to the conditions specified, there may be a malfunction on the wire harness side.

(c) Measure the resistance between the specified terminals on the wire harness side connector.

Resistance:

Symbol (Terminal No.)	Wiring Color	Terminal Description	Condition	Specified Condition
GND (D37-20) - Body ground	W-B - Body ground	Ground	Always	Below 1 Ω
MPX+ (D37-30) - Body ground	LG - Body ground (*1) B - Body ground (*2)	MPX line	Always	10 kΩ or higher

Symbol (Terminal No.)	Wiring Color	Terminal Description	Condition	Specified Condition
MPX- (D37-31) - Body ground	L - Body ground	MPX line	Always	10 kΩ or higher

(*1): w/ Smart Key System
(*2): w/o Smart Key System
If the values do not conform to the conditions specified, there may be a malfunction on the wire harness side.

5. CHECK POWER SOURCE CONTROL ECU

(a) Disconnect the D44 ECU connector.

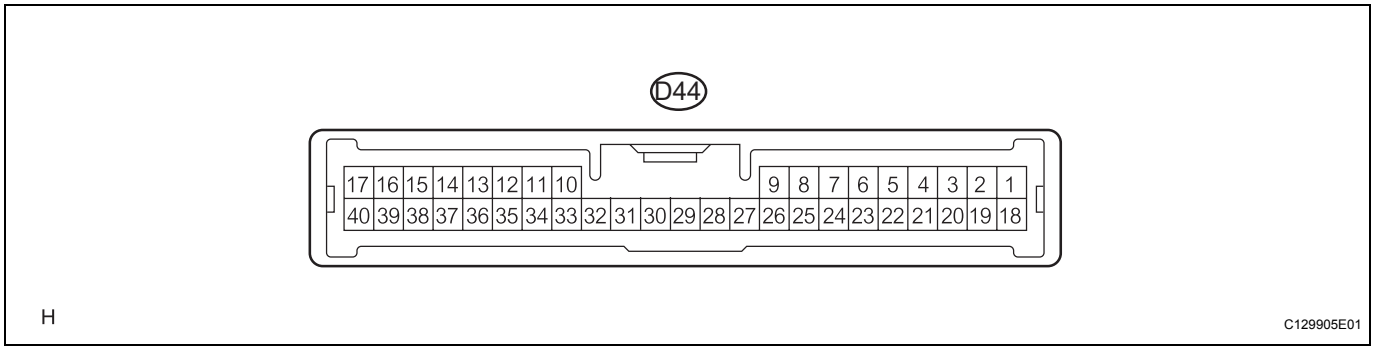

(b) Measure the voltage between the specified terminals on the wire harness side connector.

Voltage:

Symbol (Terminal No.)	Wiring Color	Terminal Description	Condition	Specified Condition
ACCD (D44-11) - Body ground	R - Body ground	Power supply (ACC)	Ignition switch: OFF → ON (ACC)	Below 1 V → 10 to 14 V
AM1 (D44-33) - Body ground	W - Body ground	Power supply (Back-up)	Always	10 to 14 V
AM2 (D44-12) - Body ground	L - Body ground	Power supply (Back-up)	Always	10 to 14 V

If the values do not conform to the conditions specified, there may be a malfunction on the wire harness side.

(c) Measure the resistance between the specified terminals on the wire harness side connector.

Resistance:

Symbol (Terminal No.)	Wiring Color	Terminal Description	Condition	Specified Condition
GND2 (D44-6) - Body ground	W-B - Body ground	Ground	Always	Below 1 Ω
MPX1 (D44-7) - Body ground	B - Body ground	MPX line	Always	10 kΩ or higher
MPX2 (D44-24) - Body ground	LG - Body ground	MPX line	Always	10 kΩ or higher

If the values do not conform to the conditions specified, there may be a malfunction on the wire harness side.

6. CHECK CERTIFICATION ECU

(a) Disconnect the D39 ECU connectors.

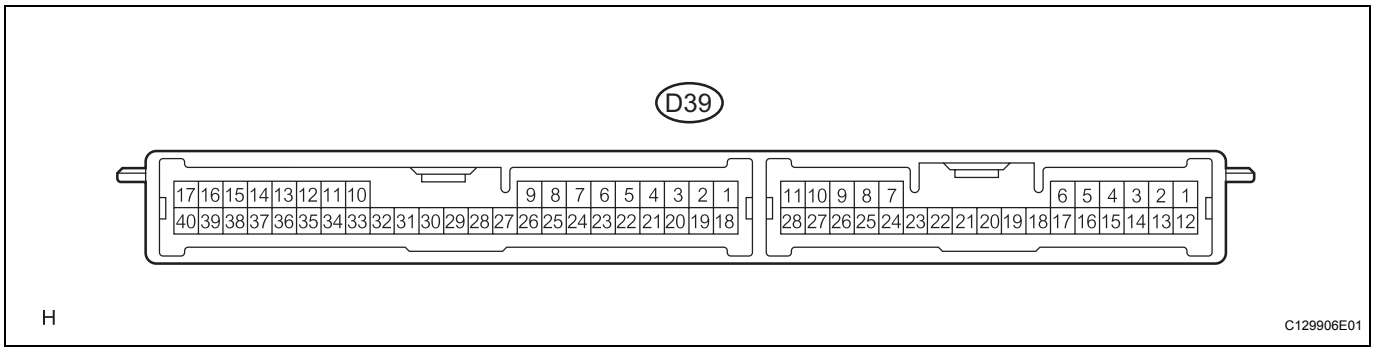

(b) Measure the voltage between the specified terminals on the wire harness side connector.

Voltage:

Symbol (Terminal No.)	Wiring Color	Terminal Description	Condition	Specified Condition
IG (D39-18) - Body ground	Y - Body ground	Power supply (IG)	Ignition switch: OFF → ON (IG)	Below 1 V → 10 to 14 V
ACC (D39-19) - Body ground	SB - Body ground	Power supply (ACC)	Ignition switch: OFF → ON (ACC)	Below 1 V → 10 to 14 V
+B1 (D39-1) - Body ground	R - Body ground	Power supply (Back-up)	Always	10 to 14 V

If the values do not conform to the conditions specified, there may be a malfunction on the wire harness side.

(c) Measure the resistance between the specified terminals on the wire harness side connector.

Resistance:

Symbol (Terminal No.)	Wiring Color	Terminal Description	Condition	Specified Condition
E (D39-17) - Body ground	W-B - Body ground	Ground	Always	Below 1 Ω
MPX1 (D39-27) - Body ground	R - Body ground	MPX line	Always	10 kΩ or higher
MPX2 (D39-28) - Body ground	B - Body ground	MPX line	Always	10 kΩ or higher

If the values do not conform to the conditions specified, there may be a malfunction on the wire harness side.

7. CHECK COMBINATION SWITCH ECU

(a) Disconnect the D13 ECU connector.

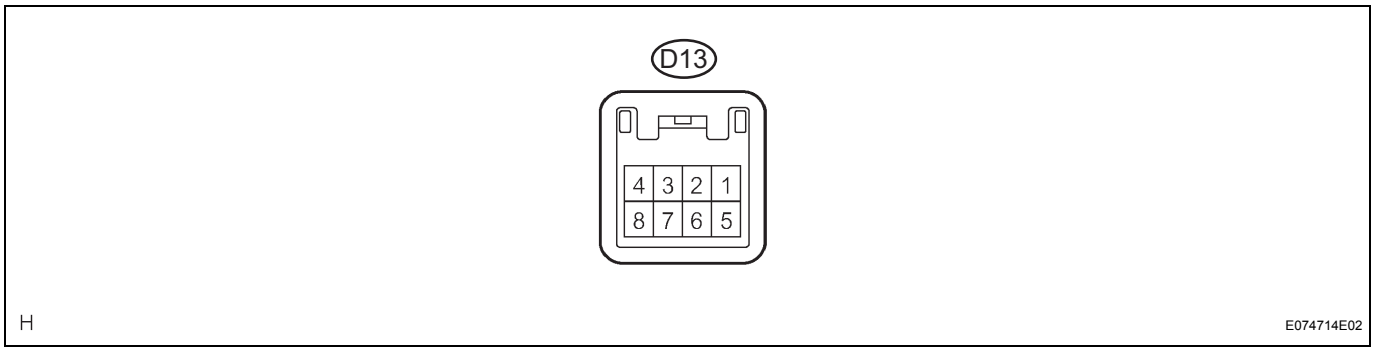

MP

(b) Measure the voltage between the specified terminals on the wire harness side connector.

Voltage:

Symbol (Terminal No.)	Wiring Color	Terminal Description	Condition	Specified Condition
IG (D13-2) - Body ground	L - Body ground	Power supply (IG)	Ignition switch: OFF → ON (IG)	Below 1 V → 10 to 14 V
B (D13-1) - Body ground	W - Body ground	Power supply (Back-up)	Always	10 to 14 V

If the values do not conform to the conditions specified, there may be a malfunction on the wire harness side.

(c) Measure the resistance between the specified terminals on the wire harness side connector.

Resistance:

Symbol (Terminal No.)	Wiring Color	Terminal Description	Condition	Specified Condition
E (D13-5) - Body ground	W-B - Body ground	Ground	Always	Below 1 Ω
MPX1 (D13-6) - Body ground	BR - Body ground	MPX line	Always	10 kΩ or higher
MPX2 (D13-7) - Body ground	R - Body ground (*1) B - Body ground (*2)	MPX line	Always	10 kΩ or higher

(*1): w/ Smart Key System
(*2): w/o Smart Key System
If the values do not conform to the conditions specified, there may be a malfunction on the wire harness side.

8. CHECK POWER SEAT ECU

(a) Disconnect the Q14 and Q15 ECU connectors.

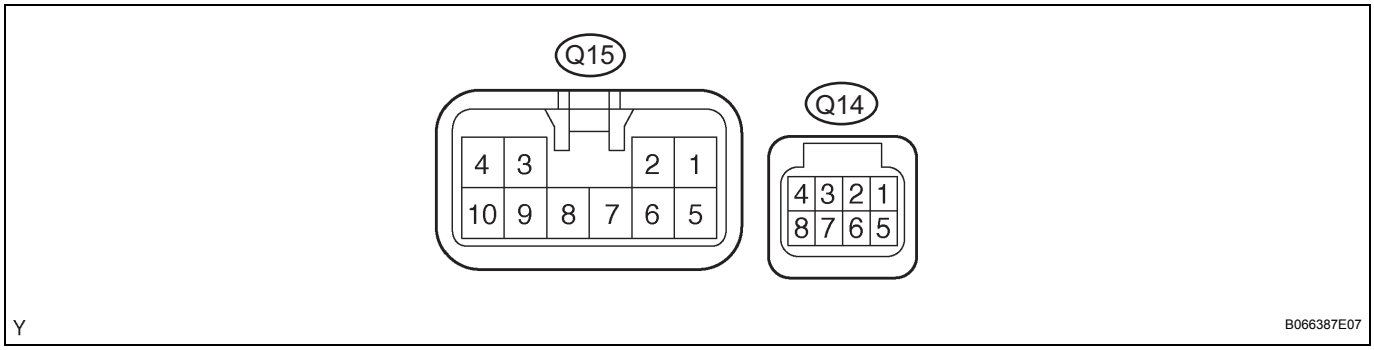

(b) Measure the voltage between the specified terminals on the wire harness side connector.

Voltage:

Symbol (Terminal No.)	Wiring Color	Terminal Description	Condition	Specified Condition
IG (Q14-4) - Body ground	Y - Body ground	Power supply (IG)	Ignition switch: OFF → ON (IG)	Below 1 V → 10 to 14 V
+B (Q15-5) - Body ground	LG - Body ground	Power supply (Back-up)	Always	10 to 14 V

If the values do not conform to the conditions specified, there may be a malfunction on the wire harness side.

(c) Measure the resistance between the specified terminals on the wire harness side connector.

Resistance:

Symbol (Terminal No.)	Wiring Color	Terminal Description	Condition	Specified Condition
GND (Q15-1) - Body ground	W-B - Body ground	Ground	Always	Below 1 Ω

MP

Symbol (Terminal No.)	Wiring Color	Terminal Description	Condition	Specified Condition
MPX1 (Q14-1) - Body ground	O - Body ground	MPX line	Always	10 kΩ or higher

If the values do not conform to the conditions specified, there may be a malfunction on the wire harness side.

9. CHECK MEMORY MIRROR ECU (LH)

(a) Disconnect the I1 ECU connector.

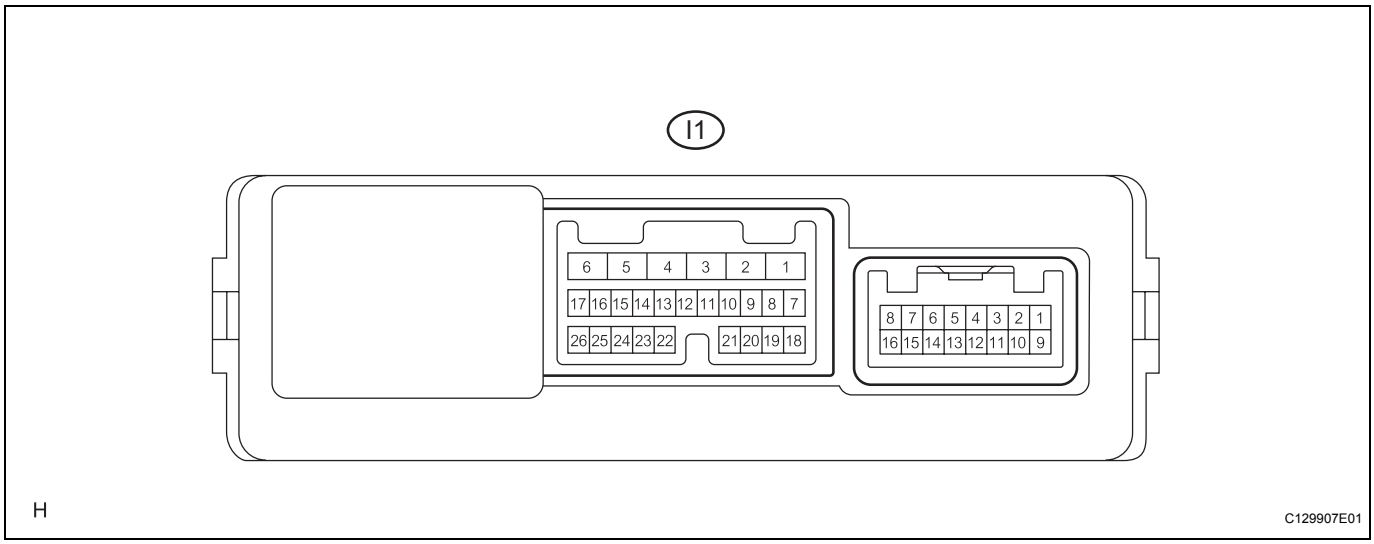

(b) Measure the voltage between the specified terminals on the wire harness side connector.

Voltage:

Symbol (Terminal No.)	Wiring Color	Terminal Description	Condition	Specified Condition
SIG (I1-3) - Body ground	GR - Body ground	Power supply (IG)	Ignition switch: OFF → ON (IG)	Below 1 V → 10 to 14 V
CPUB (I1-4) - Body ground	W - Body ground	Power supply (Back-up)	Always	10 to 14 V
BDR (I1-6) - Body ground	W - Body ground	Power supply (Back-up)	Always	10 to 14 V

If the values do not conform to the conditions specified, there may be a malfunction on the wire harness side.

(c) Measure the resistance between the specified terminals on the wire harness side connector.

Resistance:

Symbol (Terminal No.)	Wiring Color	Terminal Description	Condition	Specified Condition
GND (I1-1) - Body ground	W-B - Body ground	Ground	Always	Below 1 Ω
MPX1 (I1-8) - Body ground	BR - Body ground	MPX line	Always	10 kΩ or higher

If the values do not conform to the conditions specified, there may be a malfunction on the wire harness side.

10. CHECK MEMORY MIRROR ECU (RH)

(a) Disconnect the H1 ECU connector.

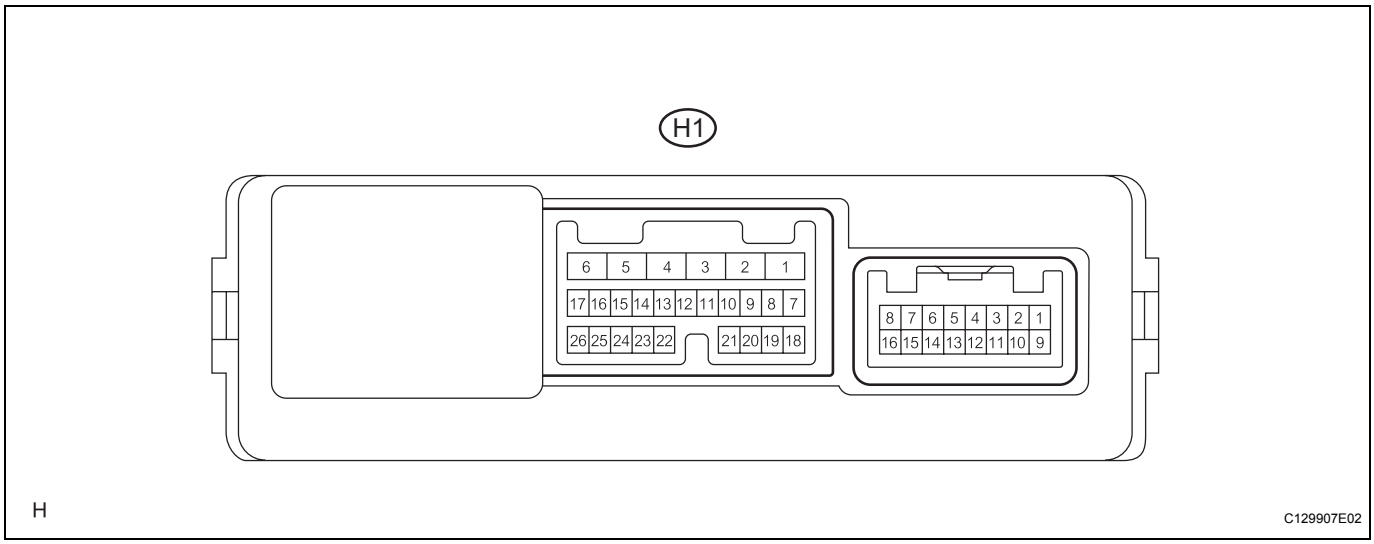

(b) Measure the voltage between the specified terminals on the wire harness side connector.

Voltage:

Symbol (Terminal No.)	Wiring Color	Terminal Description	Condition	Specified Condition
SIG (H1-3) - Body ground	GR - Body ground	Power supply (IG)	Ignition switch: OFF → ON (IG)	Below 1 V → 10 to 14 V
CPUB (H1-4) - Body ground	W - Body ground	Power supply (Back-up)	Always	10 to 14 V
BDR (H1-6) - Body ground	V - Body ground	Power supply (Back-up)	Always	10 to 14 V

If the values do not conform to the conditions specified, there may be a malfunction on the wire harness side.

(c) Measure the resistance between the specified terminals on the wire harness side connector.

Resistance:

Symbol (Terminal No.)	Wiring Color	Terminal Description	Condition	Specified Condition
GND (H1-1) - Body ground	W-B - Body ground	Ground	Always	Below 1 Ω
MPX1 (H1-8) - Body ground	B - Body ground	MPX line	Always	10 kΩ or higher

If the values do not conform to the conditions specified, there may be a malfunction on the wire harness side.

11. CHECK FRONT CONTROLLER

(a) Disconnect the 1E, 1H and 1G ECU connectors.

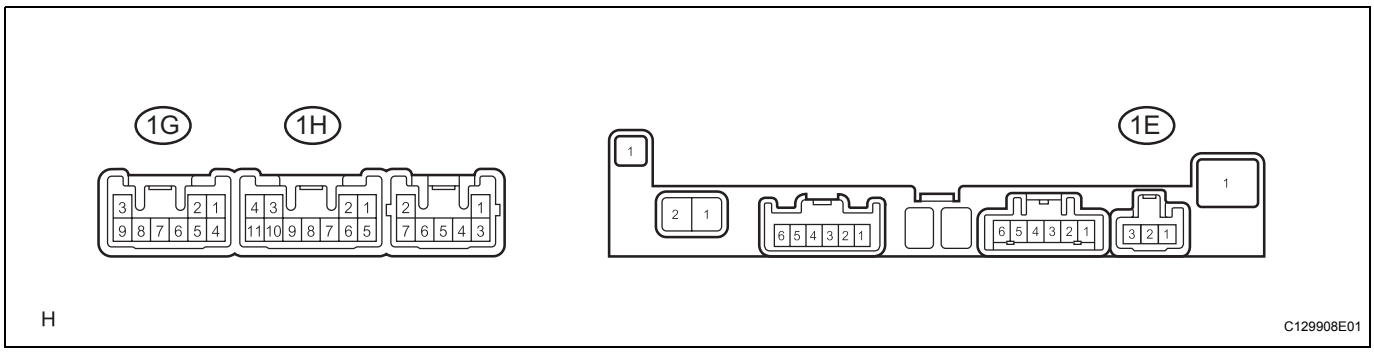

(b) Measure the voltage between the specified terminals on the wire harness side connector.

Voltage:

Symbol (Terminal No.)	Wiring Color	Terminal Description	Condition	Specified Condition
1E-2 - Body ground	Y - Body ground	Power supply (IG)	Ignition switch: OFF → ON (IG)	Below 1 V → 10 to 14 V
1H-4 - Body ground	LG - Body ground	Power supply (Back-up)	Always	10 to 14 V

If the values do not conform to the conditions specified, there may be a malfunction on the wire harness side.

(c) Measure the resistance between the specified terminals on the wire harness side connector.

Resistance:

Symbol (Terminal No.)	Wiring Color	Terminal Description	Condition	Specified Condition
1G-7 - Body ground	Y - Body ground	MPX line	Always	10 kΩ or higher
1G-8 - Body ground	B - Body ground	MPX line	Always	10 kΩ or higher

If the values do not conform to the conditions specified, there may be a malfunction on the wire harness side.

12. CHECK COMBINATION METER ECU

(a) Disconnect the E2 ECU connectors.

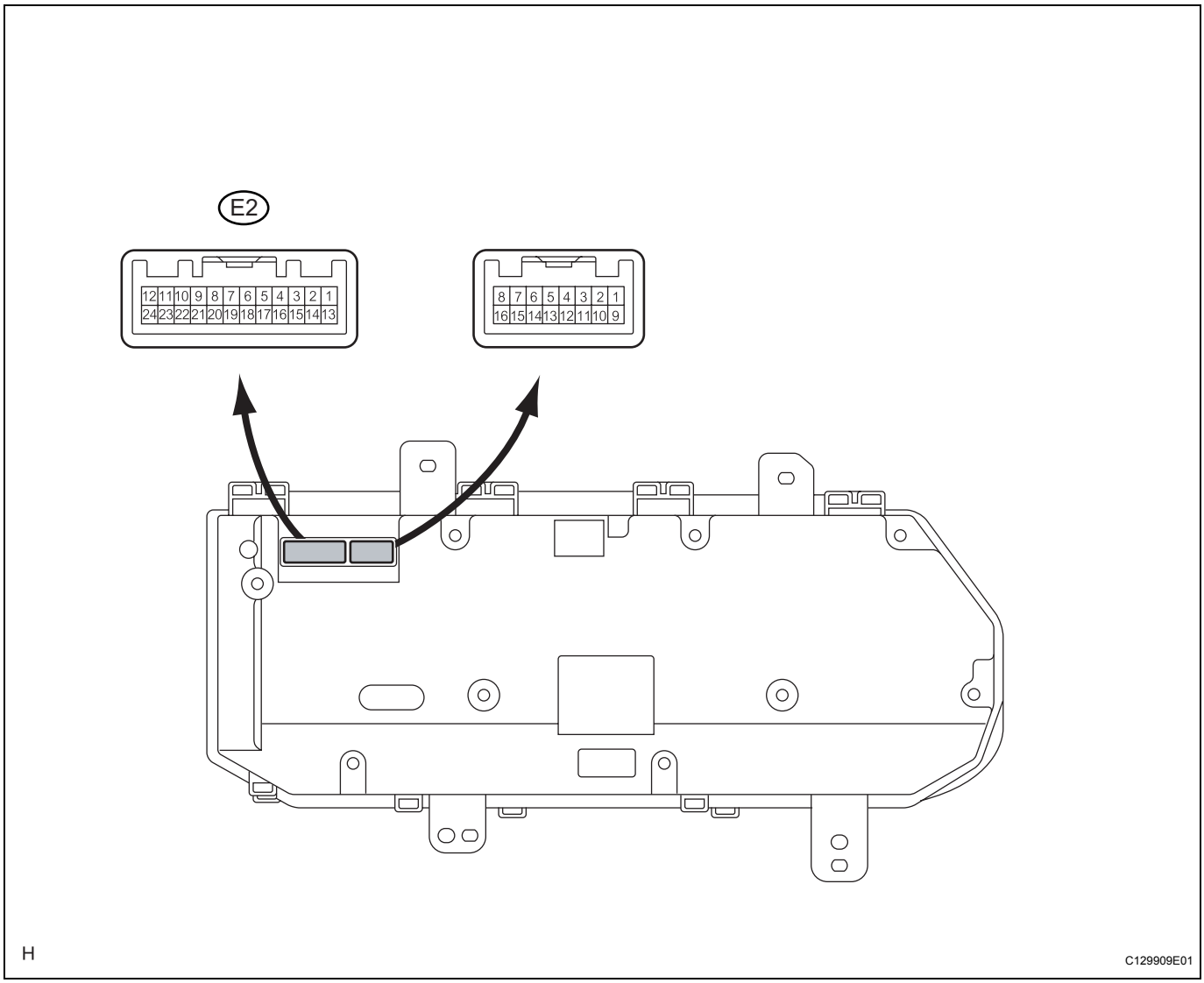

(b) Measure the voltage between the specified terminals on the wire harness side connector.

Voltage:

Symbol (Terminal No.)	Wiring Color	Terminal Description	Condition	Specified Condition
E2-13 - Body ground	R - Body ground	Power supply (IG)	Ignition switch: OFF → ON (IG)	Below 1 V → 10 to 14 V
E2-2 - Body ground	B - Body ground	Power supply (Back-up)	Always	10 to 14 V

MP

If the values do not conform to the conditions specified, there may be a malfunction on the wire harness side.

(c) Measure the resistance between the specified terminals on the wire harness side connector.

Resistance:

Symbol (Terminal No.)	Wiring Color	Terminal Description	Condition	Specified Condition
E2-10 - Body ground	W-B - Body ground	Ground	Always	Below 1 Ω
E2-4 - Body ground	P - Body ground	MPX line	Always	10 kΩ or higher
E2-16 - Body ground	LG - Body ground	MPX line	Always	10 kΩ or higher

If the values do not conform to the conditions specified, there may be a malfunction on the wire harness side.

13. CHECK OPTION CONNECTOR

(a) Disconnect the D16 ECU connector.

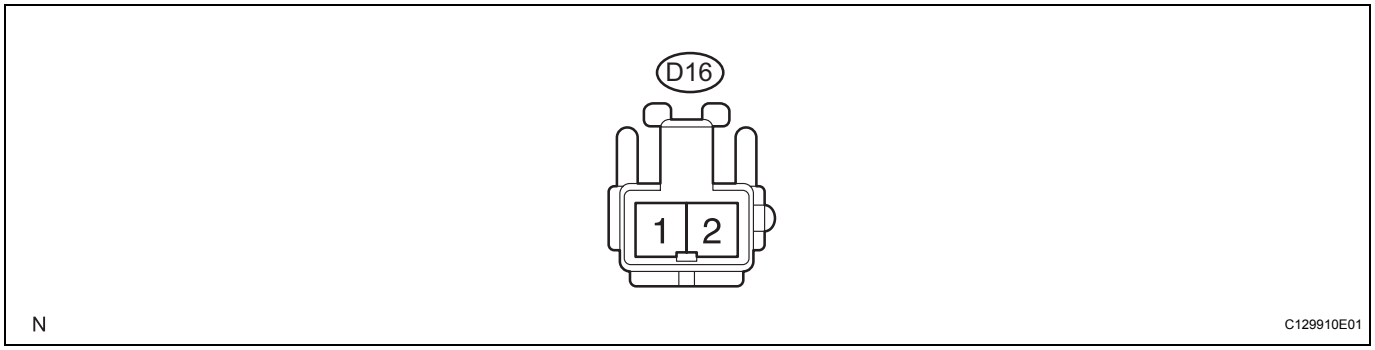

(b) Measure the resistance between the specified terminals on the wire harness side connector.

Resistance:

Symbol (Terminal No.)	Wiring Color	Terminal Description	Condition	Specified Condition
D16-1 (MPX+) - Body ground	W - Body ground	MPX line	Always	10 kΩ or higher

If the values do not conform to the conditions specified, there may be a malfunction on the wire harness side.

DIAGNOSIS SYSTEM

1. DESCRIPTION

(a) Multiplex communication system data can be read in the Data Link Connector 3 (DLC3) of the vehicle. When the system seems to be malfunctioning, use the intelligent tester to check for malfunctions and make necessary repairs.

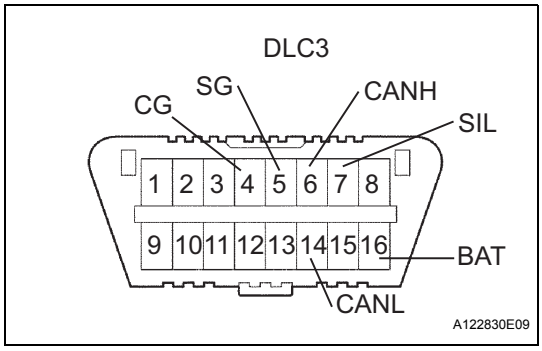

2. CHECK DLC3

(a) The vehicle's ECU uses the ISO 15765-4 communication protocol. The terminal arrangement of the DLC3 complies with SAE J1962 and matches the ISO 15765-4 format.

HINT:

Connect the cable of the intelligent tester (with CAN VIM) to the DLC3, turn the ignition switch on (IG) and attempt to use the intelligent tester. If the screen displays a communication error message, a problem exists on the vehicle side or the tester side. If the communication is normal when the tester is connected to another vehicle, inspect the DLC3 on the original vehicle.

If the communication is still impossible when the tester is connected to another vehicle, the problem is probably in the tester itself. Consult the Service Department listed in the tester's instruction manual.

Symbol (Terminals No.)	Terminal Description	Condition	Specified Condition
SIL (7) - SG (5)	Bus "+" line	During transmission	Pulse generation
CG (4) - Body ground	Chassis ground	Always	Below 1 Ω
SG (5) - Body ground	Signal ground	Always	Below 1 Ω
BAT (16) - Body ground	Battery positive	Always	11 to 14 V

3. INSPECT BATTERY VOLTAGE

Standard:

11 to 14 V

If the voltage is below 11 V, recharge or replace the battery before proceeding.

DTC CHECK / CLEAR

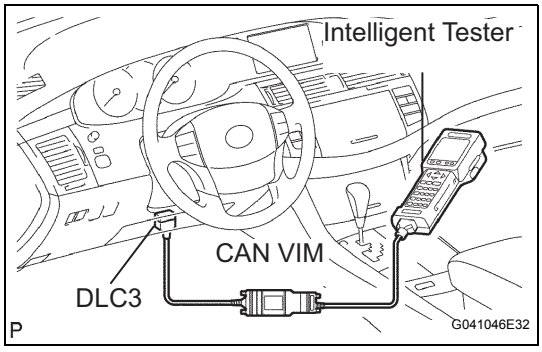

1. CHECK DTC

(a) Connect the intelligent tester to the DLC3.

(b) Turn the ignition switch on (IG).

(c) Read DTCs on the tester screen.

HINT:

Refer to the intelligent tester operator's manual for further details.

2. CLEAR DTC

(a) Connect the intelligent tester to the DLC3.

(b) Turn the ignition switch on (IG).

(c) Clear the DTCs following the prompts on the tester screen.

HINT:

Refer to the intelligent tester operator's manual for further details.

MP

DIAGNOSTIC TROUBLE CODE CHART

If a trouble code is displayed during DTC check, check the circuit corresponding to the code in the table below. Proceed to the page given for the circuit.

MULTIPLEX COMMUNICATION SYSTEM

DTC No.	Detection Item	Trouble Area	See page
B1200	MPX Body ECU Stop	1. Body ECU 2. Wire harness	MP-25
B1207	Certification ECU Communication Malfunction	1. Certification ECU 2. Wire harness	MP-29
B1208	Passenger Side Outer Mirror ECU	1. Memory mirror ECU (RH) 2. Wire harness	MP-32
B1209	Driver Side Outer Mirror	1. Memory mirror ECU (LH) 2. Wire harness	MP-34
B1210	Power ECU Stop	1. Power source control ECU 2. Wire harness	MP-36
B1214	Short to B+ in Door System Communication Bus Malfunction	1. ECUs 2. Wire harness	MP-39
B1215	Short to GND in Door System Communication Bus Malfunction	1. ECUs 2. Wire harness	MP-39
B1248	AVC-LAN Communication Impossible	1. AVC-LAN (radio receiver assembly or multi-display assembly) 2. Wire harness	MP-47
B1262	A/C ECU Communication Stop	1. A/C ECU 2. Wire harness	MP-48
B1271	Combination Meter ECU Communication Stop	1. Combination meter ECU 2. Wire harness	MP-51
B1272	Power Seat ECU Communication Stop	1. Driver seat ECU (Power seat ECU) 2. Wire harness	MP-55
B1275	Accessory Bus Buffer Communication Stop	1. Option connector (BEAN bus buffer) 2. Wire harness	MP-58
B1278	Combination Switch ECU Communication Stop	1. Combination switch 2. Wire harness	MP-60
B1279	Rain Sensor Communication Stop	1. Rain sensor 2. Wire harness	MP-63
B1296	Front Light ECU Communication Stop	1. Front controller 2. Wire harness	MP-65

When DTCs indicating "+B or GND short malfunction of communication bus" (B1214, B1215, etc.) are detected at the same time as DTCs indicating "communication stop" (B1200, B1207, etc.), repair DTCs indicating "+B or GND short malfunction of communication bus" first.

DTC	B1200	MPX Body ECU Stop

DESCRIPTION

This DTC is detected when communication between the body ECU and the gateway ECU stops for more than 10 seconds.

DTC No.	DTC Detection Condition	Trouble Area
B1200	Body ECU Communication stops	• Body ECU • Wire harness

WIRING DIAGRAM

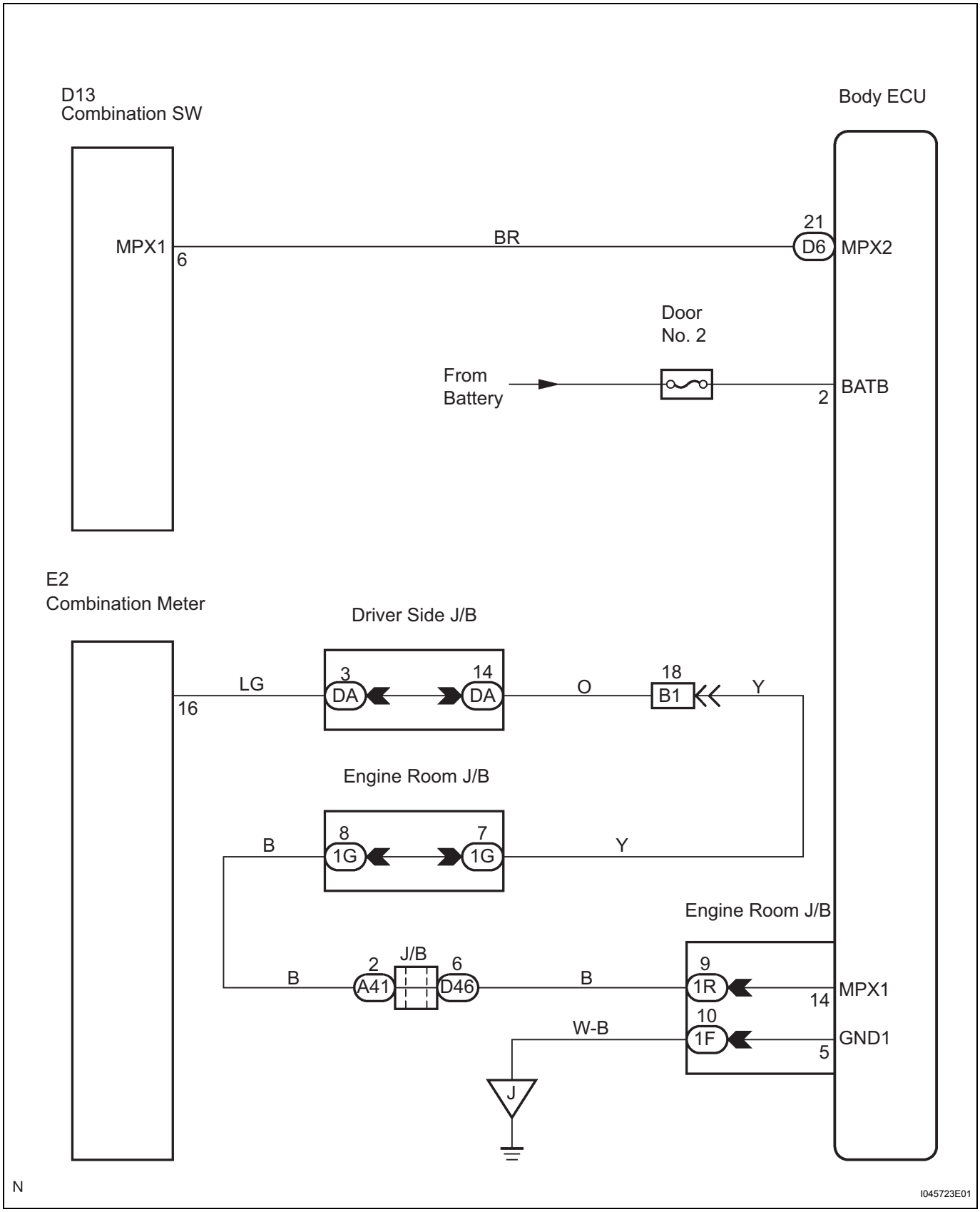

MP

INSPECTION PROCEDURE

1	CHECK HARNESS AND CONNECTOR (BODY ECU - BATTERY AND BODY GROUND)

Body ECU Connector Front View:

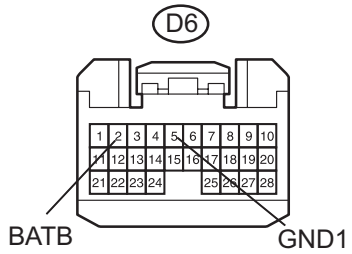

(a) Disconnect the D6 ECU connector.
(b) Measure the voltage between the specified terminals on the wire harness side connector.
Voltage

Tester Connection	Condition	Specified Condition
D6-2 (BATB) - Body ground	Always	10 to 14 V

(c) Measure the resistance between the specified terminals on the wire harness side connector.
Resistance

Tester Connection	Condition	Specified Condition
D6-5 (GND1) - Body ground	Always	Below 1 Ω

NG → **REPAIR OR REPLACE HARNESS OR CONNECTOR**

OK

2	CHECK RESISTANCE OF COMMUNICATION LINE

(a) Disconnect the D6, D13 and E2 ECU connectors.

Body ECU Connector Front View:

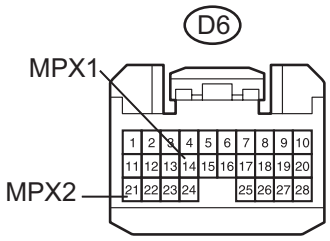

Combination Switch Connector Front View:

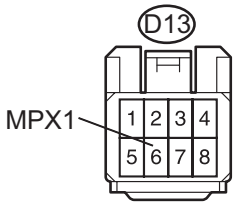

Combination Meter Connector Front View:

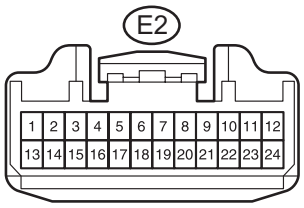

N

C129912E01

(b) Measure the resistance between the specified terminals on the wire harness side connectors.

Resistance

Tester Connection	Specified Condition
D6-14 (MPX1) - E2-16	Below 1 Ω
D6-21 (MPX2) - D13-6 (MPX1)	Below 1 Ω

Result

Result	Proceed to
Both are OK	A
One is OK	B
Both are NG	C

B → **REPLACE BODY ECU AND REPAIR OR REPLACE HARNESS OR CONNECTOR**

C → **REPAIR OR REPLACE HARNESS OR CONNECTOR**

A

REPLACE BODY ECU

MP

DTC	B1207	Certification ECU Communication Malfunction

DESCRIPTION

This DTC is detected when communication between the certification ECU and gateway ECU stops for more than 10 seconds.

DTC No.	DTC Detection Condition	Trouble Area
B1207	Certification ECU communication stops	• Certification ECU • Wire harness

WIRING DIAGRAM

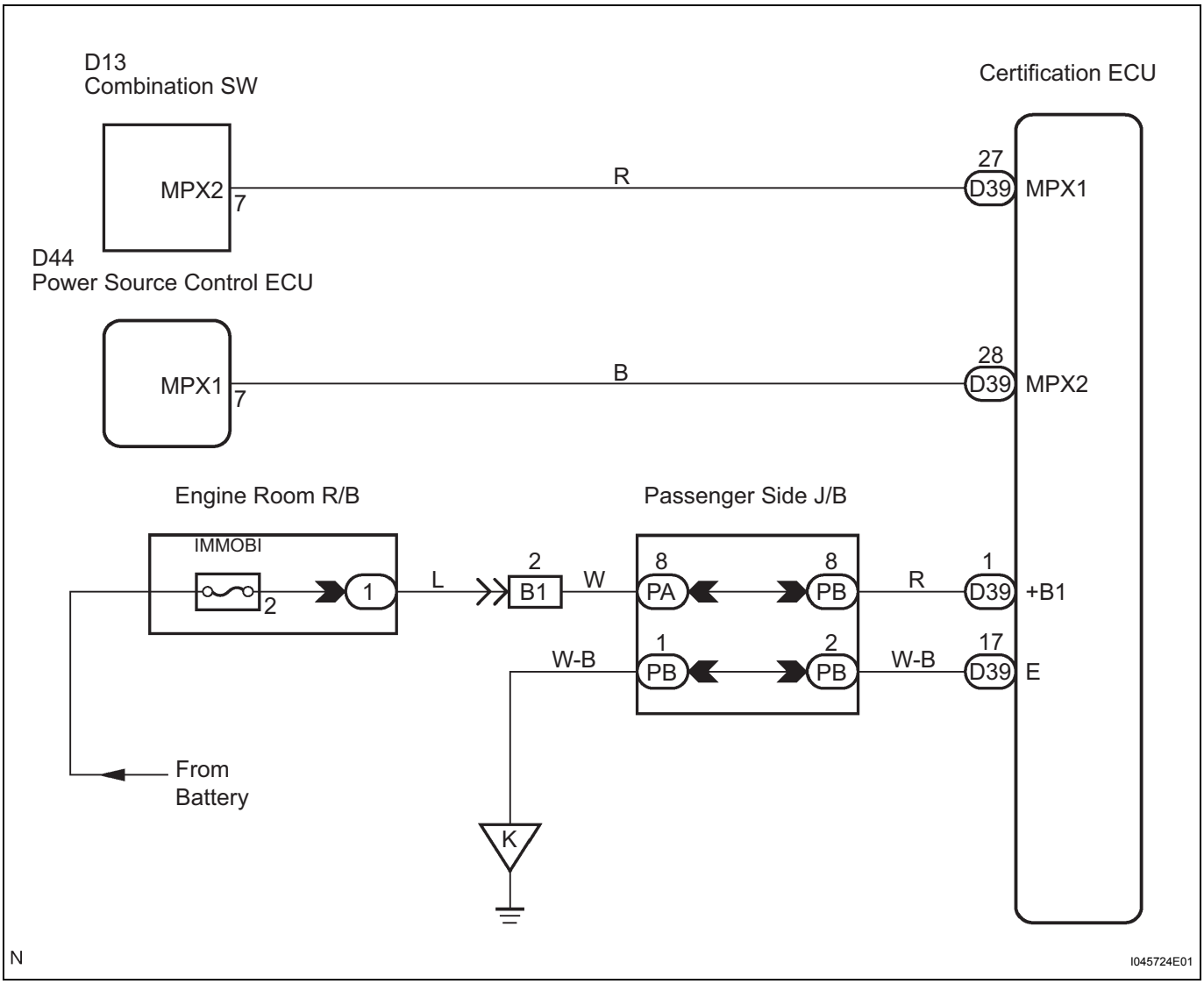

INSPECTION PROCEDURE

1	CHECK HARNESS AND CONNECTOR (CERTIFICATION ECU - BATTERY AND BODY GROUND)

(a) Disconnect the D39 ECU connector.

Certification ECU Connector Front View:

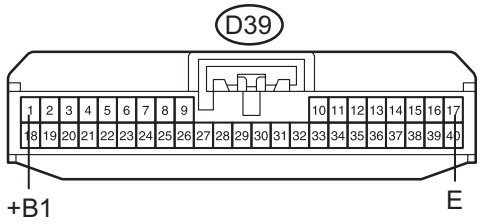

(b) Measure the voltage between the specified terminals on the wire harness side connector.

Voltage

Tester Connection	Specified Condition
D39-1 (+B1) - Body ground	10 to 14 V

(c) Measure the resistance between the specified terminals on the wire harness side connector.

Resistance

Tester Connection	Specified Condition
D39-17 (E) - Body ground	Below 1 Ω

NG → **REPAIR OR REPLACE HARNESS OR CONNECTOR**

OK

2 CHECK RESISTANCE OF COMMUNICATION LINE

Combination Switch Connector Front View:

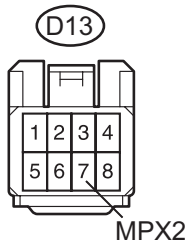

Certification ECU Connector Front View:

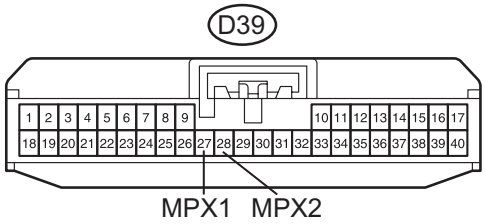

Power Source Control ECU Connector Front View:

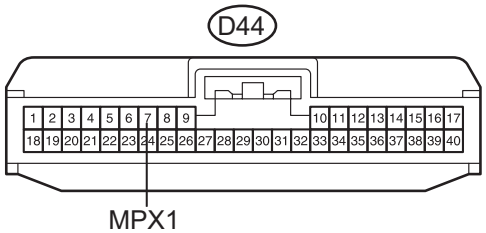

(a) Disconnect the D13, D39 and D44 ECU connectors.

(b) Measure the resistance between the specified terminals on the wire harness side connector.

Resistance

Tester Connection	Specified Condition
D39-27 (MPX1) - D13-7 (MPX2)	Below 1 Ω
D39-28 (MPX2) - D44-7 (MPX1)	Below 1 Ω

Result

Result	Proceed to
Both are OK	A
One is OK	B
Both are NG	C

B → **REPLACE CERTIFICATION ECU AND REPAIR OR REPLACE HARNESS OR CONNECTOR**

C → **REPAIR OR REPLACE HARNESS OR CONNECTOR**

MP

A

REPLACE CERTIFICATION ECU

DTC	B1208	Passenger Side Outer Mirror ECU

DESCRIPTION

This DTC is detected when communication between the passenger side outer mirror ECU (memory mirror ECU) and gateway ECU stops for more than 10 seconds.

DTC No.	DTC Detecting Condition	Trouble Area
B1208	Passenger side outer mirror ECU communication stops	• Memory mirror ECU (RH) • Wire harness

WIRING DIAGRAM

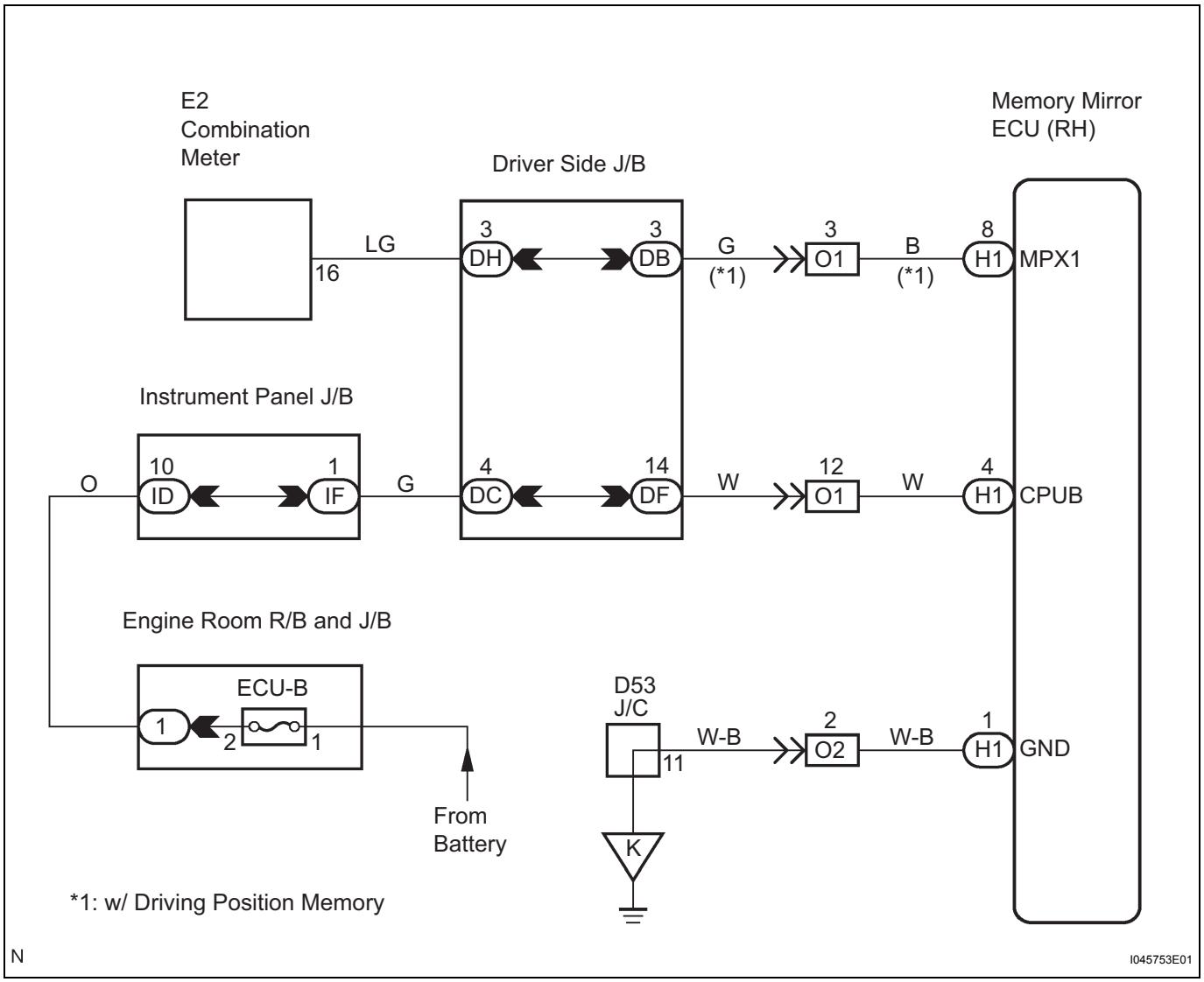

INSPECTION PROCEDURE

1	CHECK HARNESS AND CONNECTOR (MEMORY MIRROR ECU - BATTERY AND BODY GROUND)

(a) Disconnect the H1 ECU connector.

MP

Memory Mirror ECU Connector
Front View:

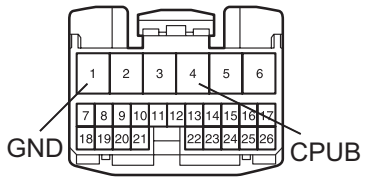

N C129915E01

(b) Measure the voltage between the specified terminals on the wire harness side connector.
Voltage

Tester Connection	Specified Connection
H1-4 (CPUB) - Body ground	10 to 14 V

(c) Measure the resistance between the specified terminals on the wire harness side connector.
Resistance

Tester Connection	Specified Connection
H1-1 (GND) - Body ground	Below 1 Ω

NG → **REPAIR OR REPLACE HARNESS OR CONNECTOR**

OK

2 CHECK RESISTANCE OF COMMUNICATION LINE

(a) Disconnect the H1 and E2 ECU connectors.
(b) Measure the resistance between the specified terminals on the wire harness side connector.
Resistance

Tester Connection	Specified Connection
H1-8 (MPX1) - E2-16	Below 1 Ω

NG → **REPAIR OR REPLACE HARNESS OR CONNECTOR**

Memory Mirror ECU Connector
Front View:

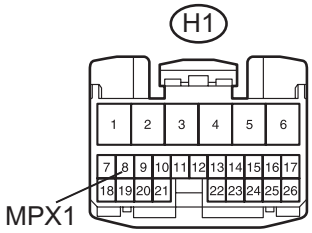

Combination Meter Connector
Front View:

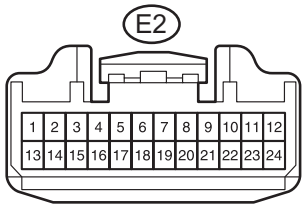

N C129916E01

OK

REPLACE MEMORY MIRROR ECU

DTC	B1209	Driver Side Outer Mirror

DESCRIPTION

This DTC is detected when communication between the driver side outer mirror ECU (memory mirror ECU) and gateway ECU stops for more than 10 seconds.

DTC No.	DTC Detection Condition	Trouble Area
B1209	Driver side outer mirror ECU Communication stops	• Memory mirror ECU (LH) • Wire harness

WIRING DIAGRAM

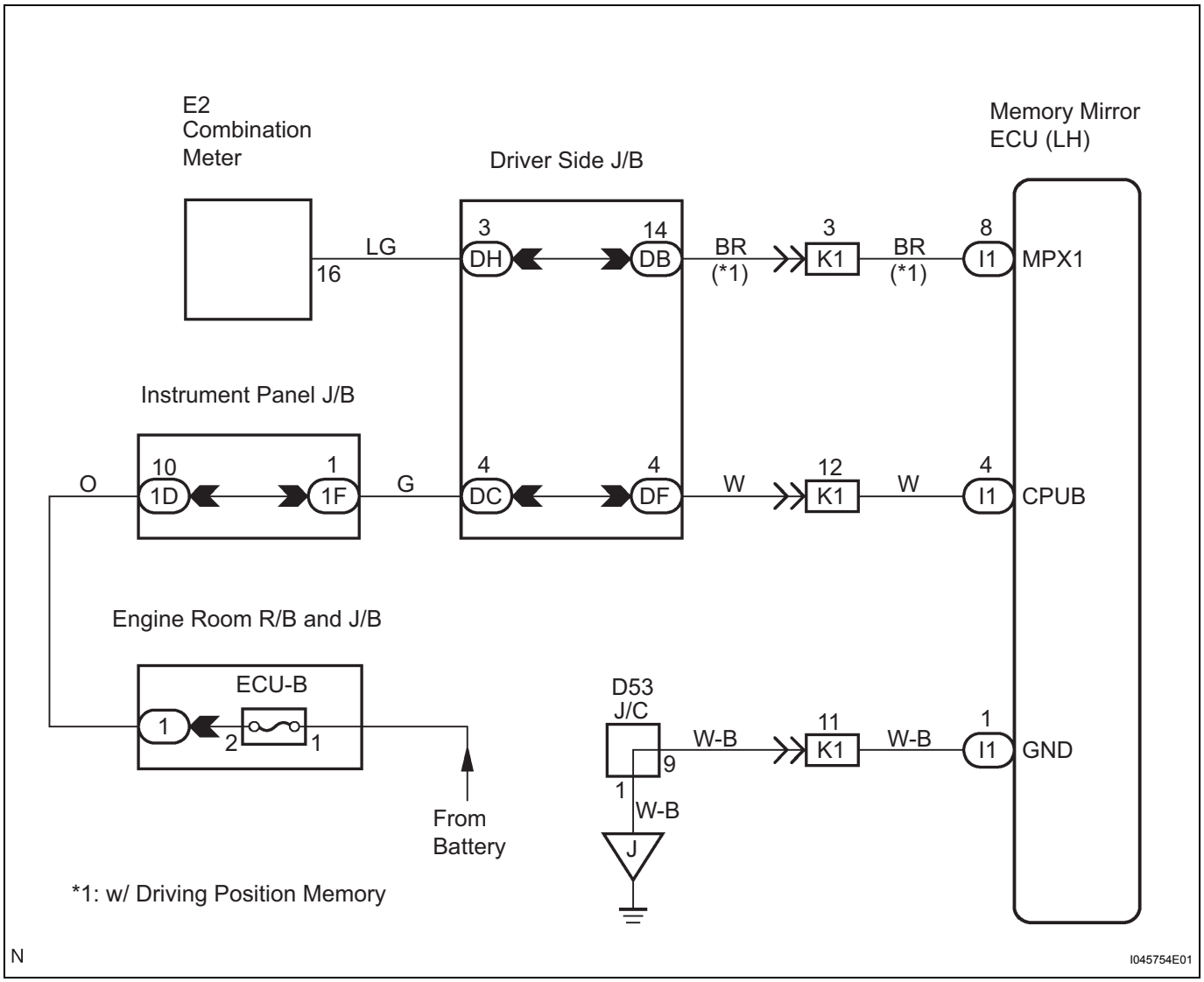

INSPECTION PROCEDURE

1	CHECK HARNESS AND CONNECTOR (MEMORY MIRROR ECU - BATTERY AND BODY GROUND)

(a) Disconnect the I1 ECU connector.

MP

Memory Mirror ECU Connector
Front View:

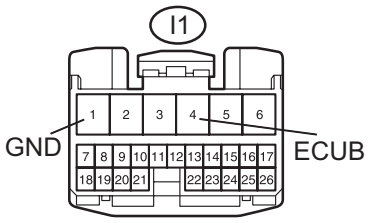

N C129917E01

(b) Measure the voltage between the specified terminals on the wire harness side connector.
Voltage

Tester Connection	Specified Connection
I1-4 (ECUB) - Body ground	10 to 14 V

(c) Measure the resistance between the specified terminals on the wire harness side connector.
Resistance

Tester Connection	Specified Connection
I1-1 (GND) - Body ground	Below 1 Ω

NG → **REPAIR OR REPLACE HARNESS OR CONNECTOR**

OK

2 CHECK RESISTANCE OF COMMUNICATION LINE

Memory Mirror ECU Connector
Front View:

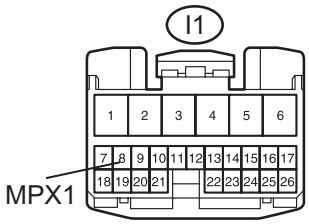

Combination Meter Connector
Front View:

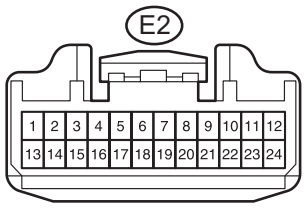

N C129918E01

(a) Disconnect the I1 and E2 ECU connectors.
(b) Measure the resistance between the specified terminals on the wire harness side connector.
Resistance

Tester Connection	Specified Connection
I1-8 (MPX1) - E2-16	Below 1 Ω

NG → **REPAIR OR REPLACE HARNESS OR CONNECTOR**

OK

REPLACE MEMORY MIRROR ECU

MP

DTC	B1210	Power ECU Stop

DESCRIPTION

This DTC is detected when communication between the power source control ECU and gateway ECU stops for more than 10 seconds.

DTC No.	DTC Detection Condition	Trouble Area
B1210	Power source control ECU communication stops	• Power source control ECU • Wire harness

WIRING DIAGRAM

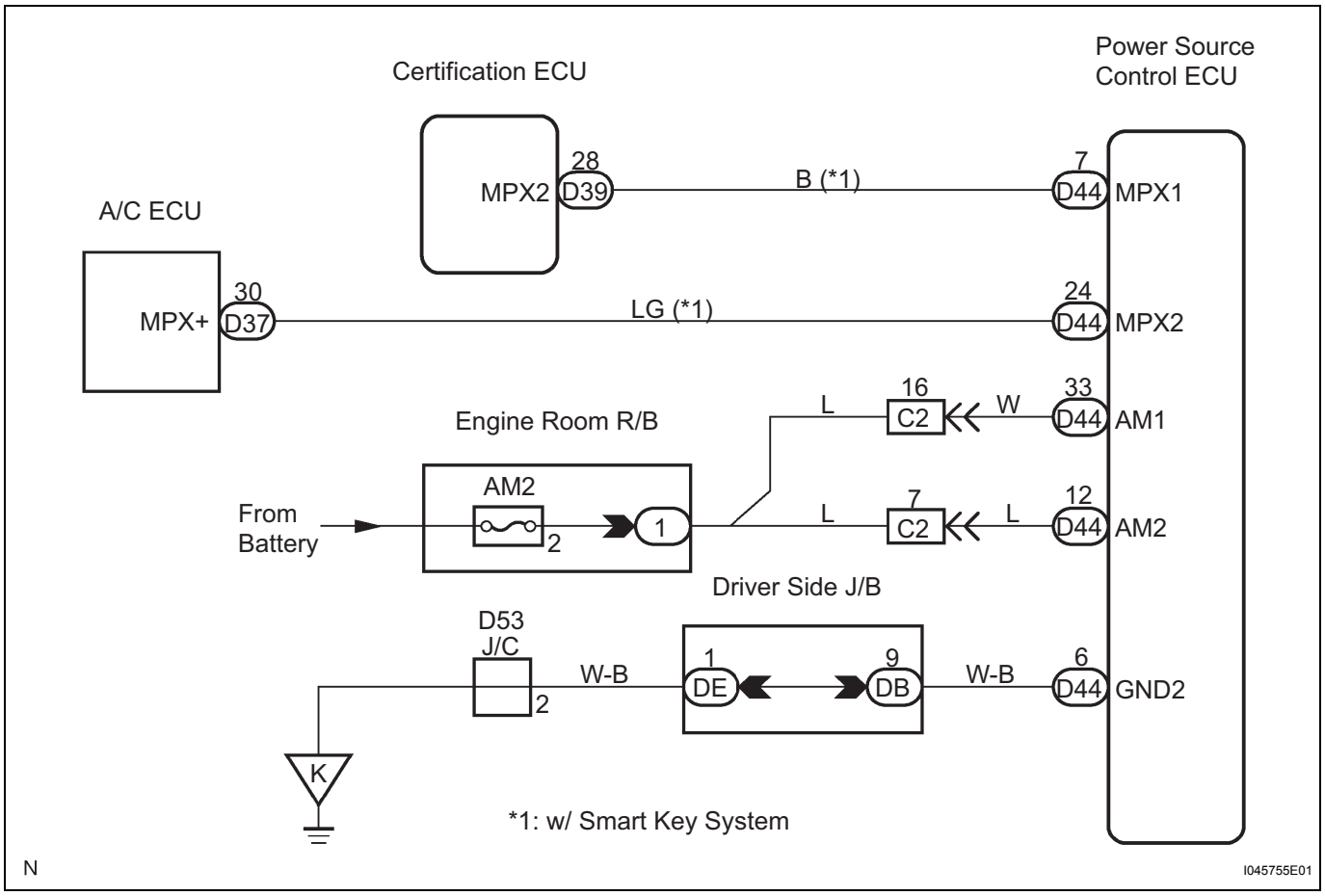

INSPECTION PROCEDURE

1	CHECK HARNESS AND CONNECTOR (POWER SOURCE CONTROL ECU - BATTERY AND BODY GROUND)

(a) Disconnect the D44 ECU connector.

MP

Power Source Control ECU Connector Front View:

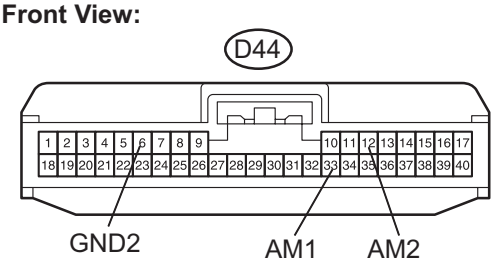

(b) Measure the voltage between the specified terminals on the wire harness side connector.

Voltage

Tester Connection	Specified Condition
D44-33 (AM1) - Body ground	10 to 14 V
D44-12 (AM2) - Body ground	10 to 14 V

(c) Measure the resistance between the specified terminals on the wire harness side connector.

Resistance

Tester Connection	Specified Condition
D44-6 (GND2) - Body ground	Below 1 Ω

NG → **REPAIR OR REPLACE HARNESS OR CONNECTOR**

OK

2	CHECK RESISTANCE OF COMMUNICATION LINE

(a) Disconnect the D44, D37 and D39 ECU connectors.

Power Source Control ECU Connector Front View:

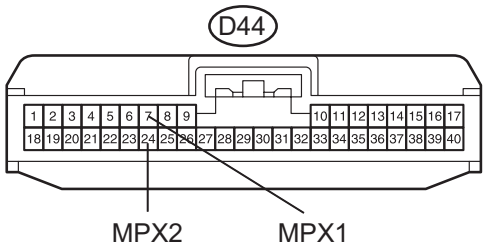

A/C ECU Connector Front View:

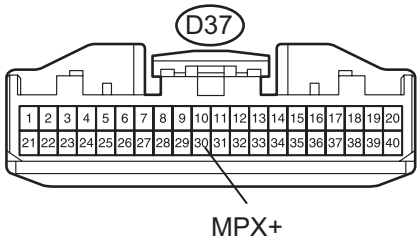

Certification ECU Connector Front View:

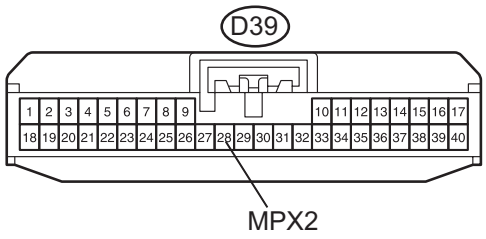

N

C129920E01

(b) Measure the resistance between the specified terminals on the wire harness side connectors.

Resistance

Tester Connection	Specified Condition
D44-7 (MPX1) - D39-28 (MPX2)	Below 1 Ω
D44-24 (MPX2) - D37-30 (MPX+)	Below 1 Ω

Result

Result	Proceed to
Both are OK	A
One is OK	B
Both are NG	C

B → **REPLACE POWER SOURCE CONTROL ECU AND REPAIR OR REPLACE HARNESS OR CONNECTOR**

C → **REPAIR OR REPLACE HARNESS OR CONNECTOR**

A

REPLACE POWER SOURCE CONTROL ECU

MP

DTC	B1214	Short to B+ in Door System Communication Bus Malfunction

DTC	B1215	Short to GND in Door System Communication Bus Malfunction

DESCRIPTION

DTC B1214 is detected when the door system communication circuit and +B battery are shorted. DTC B1215 is detected when the communication circuit and body ground are shorted. When this condition is detected, the door system communication bus (BEAN) will be disabled and some diagnosis codes will be output.

DTC No.	DTC Detection Condition	Trouble Area
B1214	Door system communication circuit and +B battery system are shorted	• A/C ECU • Power source ECU *1 • Certification ECU • Combination switch ECU • Body ECU • Option connector *1, *3 • Front controller • Power seat ECU *2 • Memory mirror ECU (RH) *2 • Memory mirror ECU (LH) *2 • Wire harness
B1215	Door system communication circuit and body ground are shorted	• A/C ECU • Power source ECU *1 • Certification ECU • Combination switch ECU • Body ECU • Option connector *1, *3 • Front controller • Power seat ECU *2 • Memory mirror ECU (RH) *2 • Memory mirror ECU (LH) *2 • Wire harness

HINT:
*1: w/ Smart key system
*2: w/ Driving position memory
*3: w/ Engine immobilizer w/ alarm

WIRING DIAGRAM

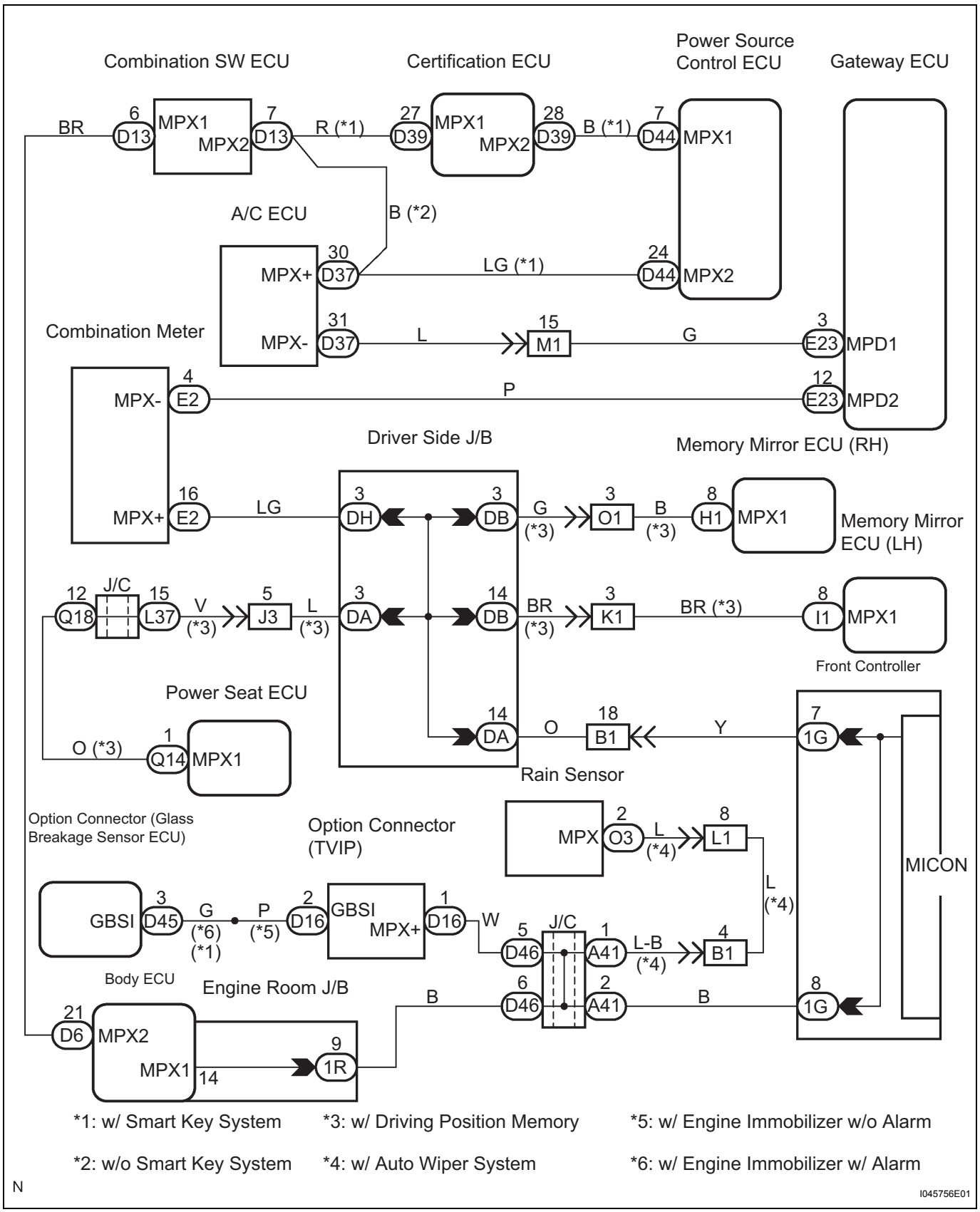

MP

INSPECTION PROCEDURE

1	CHECK DIAGNOSTIC TROUBLE CODE (A ECU)

(a) Disconnect the A ECU connector and check for DTCs B1214 and B1215.

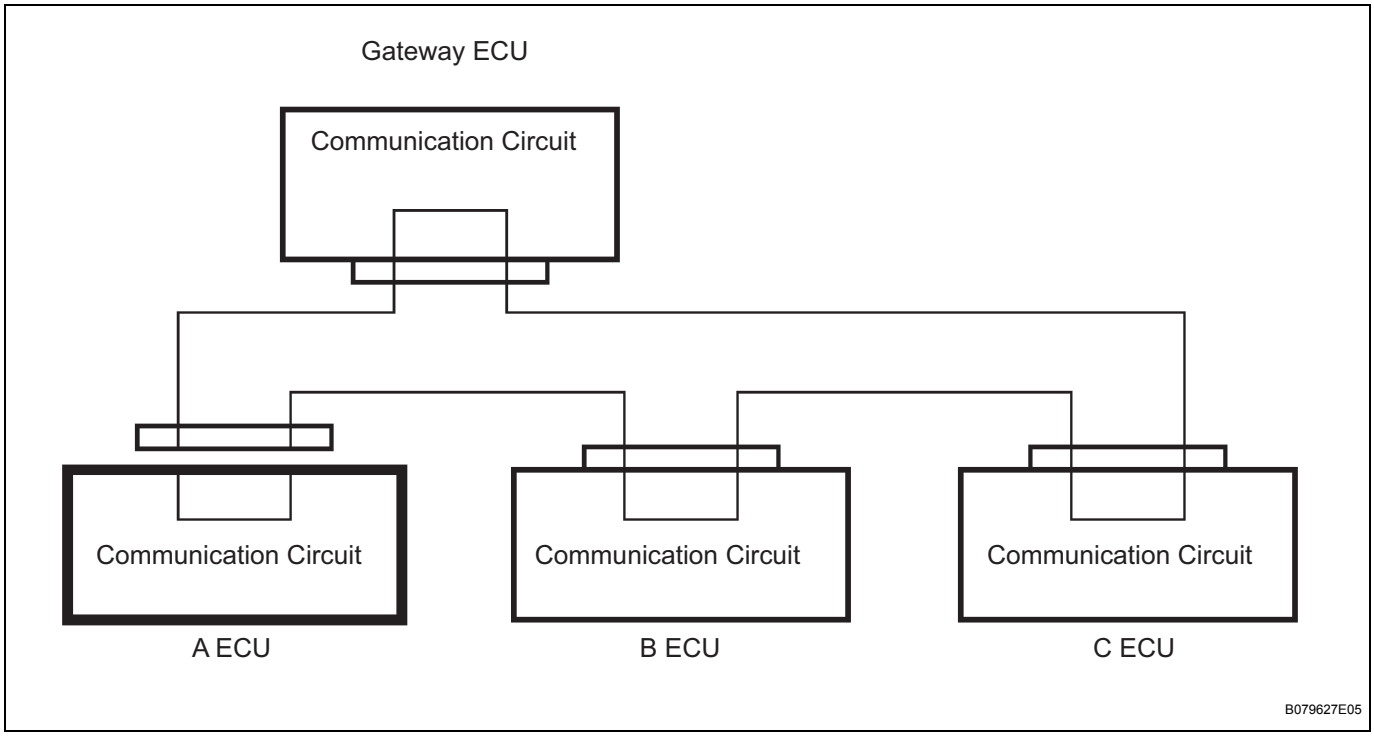

OK:

Neither DTC B1214 nor DTC B1215 is output.

NOTICE:

Disconnect the connectors one by one. Reconnect the connectors before starting the next check.

HINT:

- The A ECU represents the A/C ECU.
- If any of the stated DTCs are not output, the disconnected A ECU (A/C ECU) is malfunctioning.

NG → **Go to step 2**

OK

REPLACE A ECU

2	CHECK DIAGNOSTIC TROUBLE CODE (B ECU)

(a) Disconnect the A ECU and B ECU connectors and check for DTCs B1214 and B1215.

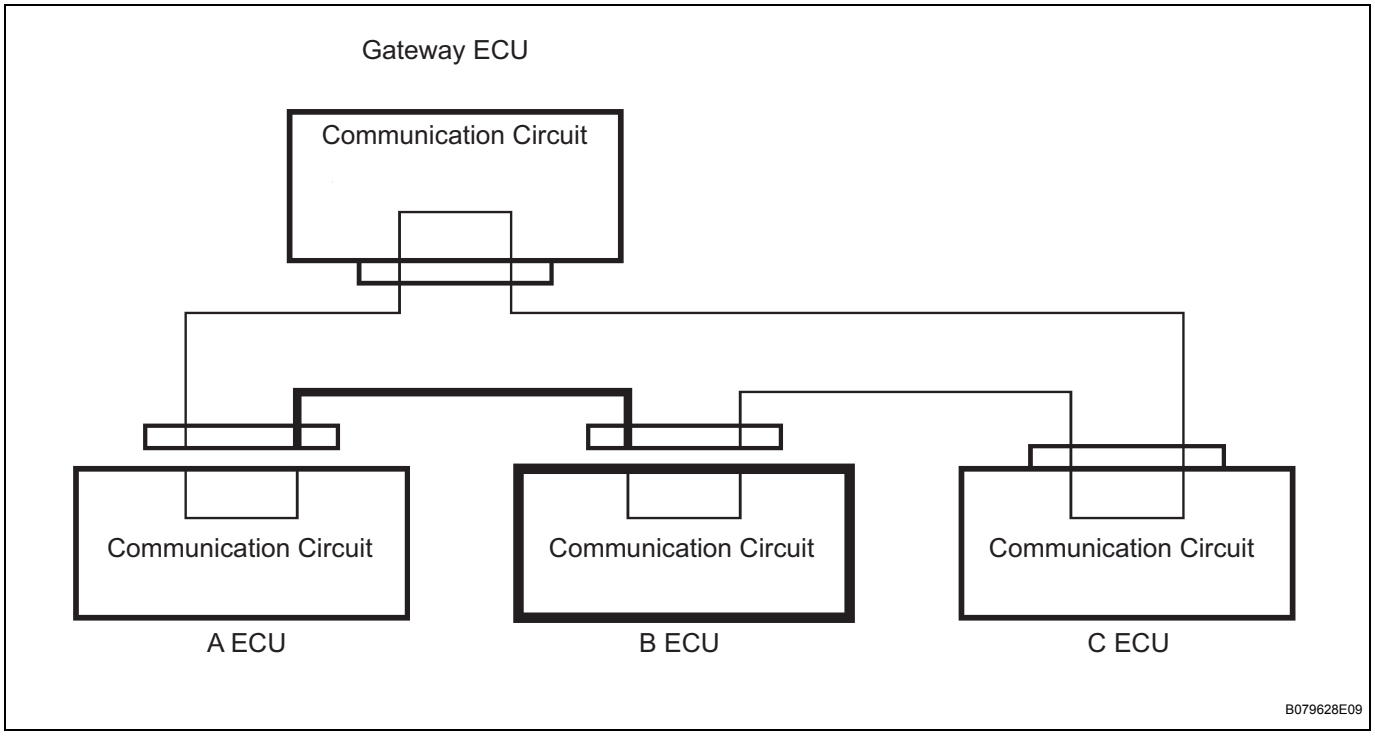

OK:

Neither DTC B1214 nor DTC B1215 is output.

NOTICE:

Disconnect the connectors one by one. Reconnect the connectors before starting the next check.

HINT:

- Remove the B ECUs in the following order:
  - Power source ECU
  - Certification ECU
  - Combination switch ECU
  - Body ECU
  - Option connector
  - Front controller
  - Rain sensor
  - Front controller
  - Power seat ECU
  - Memory mirror ECU (LH)
  - Memory mirror ECU (RH)
- If any of the stated DTCs are not output, the disconnected B ECU (one of the ECUs from the above list) or the wire harness between the A ECU and B ECU is malfunctioning.
- After the DTC is cleared, proceed to the next step.

NG	**Go to step 4**

OK

3	**CHECK WIRE HARNESS BETWEEN A ECU AND B ECU**

(a) Disconnect the B ECU connectors and check for DTCs B1214 and B1215.

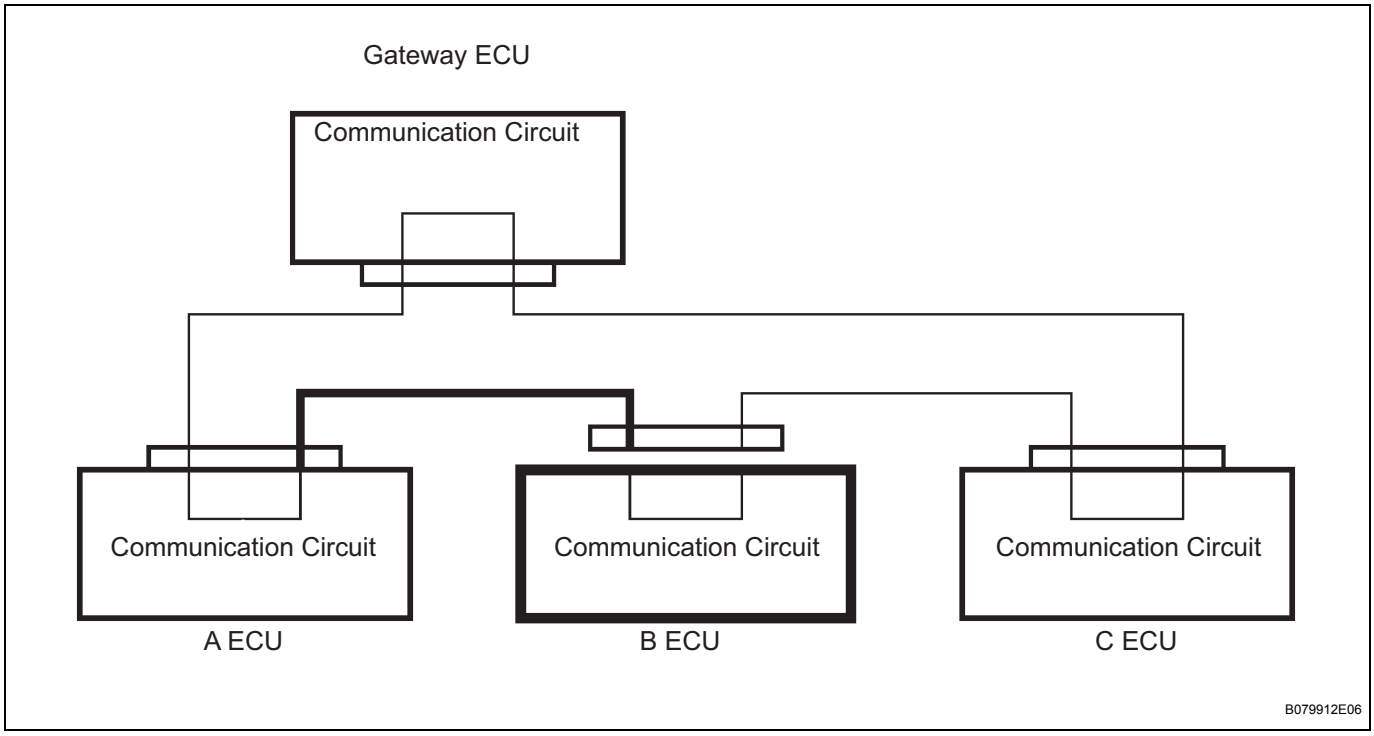

OK:
Neither DTC B1214 nor DTC B1215 is output.
NOTICE:
Disconnect the connectors one by one. Reconnect the connectors before starting the next check.
HINT:
If any of the stated DTCs are not output, the wire harness between the A ECU and B ECU is functioning normally but the disconnected B ECU is malfunctioning.

NG → **REPAIR OR REPLACE WIRE HARNESS BETWEEN A ECU AND B ECU**

OK

REPLACE B ECU

4	CHECK DIAGNOSTIC TROUBLE CODE (C ECU)

MP

(a) Disconnect the B ECU and C ECU connectors and check for DTCs B1214 and B1215.

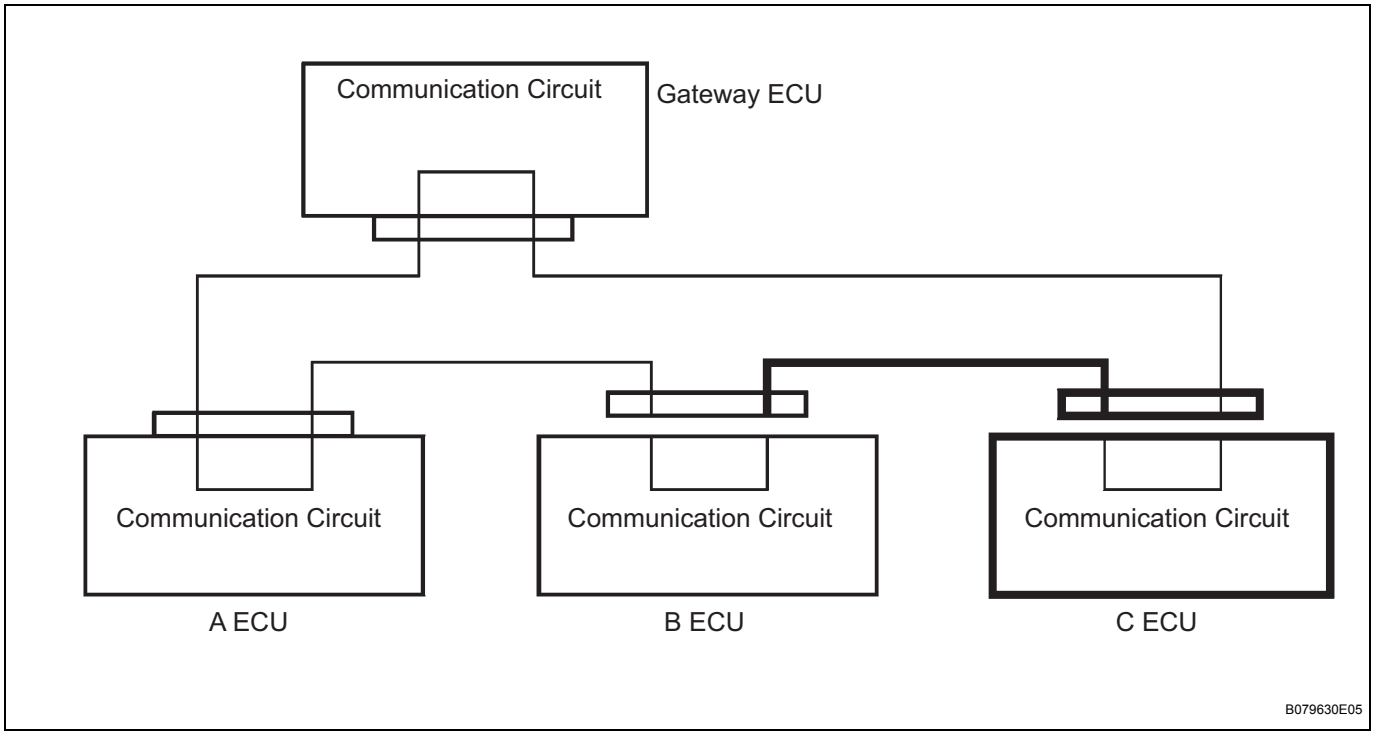

OK:

Neither DTC B1214 nor DTC B1215 is output.

NOTICE:

Disconnect the connectors one by one. Reconnect the connectors before starting the next check.

HINT:

- The C ECU represents the combination meter ECU.
- If any of the stated DTCs are not output, the disconnected C ECU (combination meter ECU) or the wire harness between the B ECU and C ECU is malfunctioning.

NG	**Go to step 6**

OK

5	**CHECK WIRE HARNESS BETWEEN B ECU AND C ECU**

(a) Disconnect the C ECU connector and check for DTCs B1214 and B1215.

MP

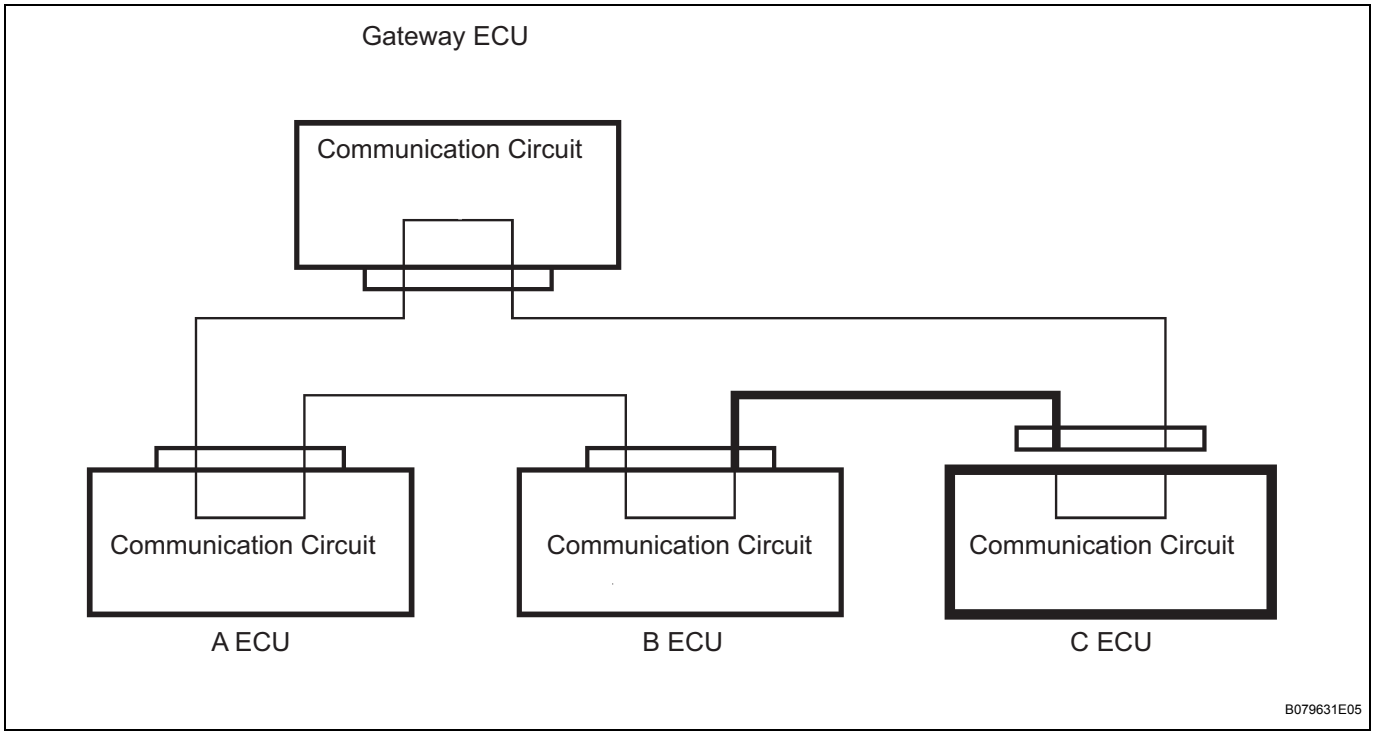

OK:
Neither DTC B1214 nor DTC B1215 is output.
NOTICE:
Disconnect the connectors one by one. Reconnect the connectors before starting the next check.
HINT:
If any of the stated DTCs are not output, the wire harness between the B ECU and C ECU is functioning normally but the disconnected C ECU is malfunctioning.

NG → **REPAIR OR REPLACE WIRE HARNESS BETWEEN B ECU AND C ECU**

OK

REPLACE C ECU

6	CHECK WIRE HARNESS BETWEEN GATEWAY ECU AND A ECU OR C ECU

(a) Check for a short-circuit in B+ or body ground.

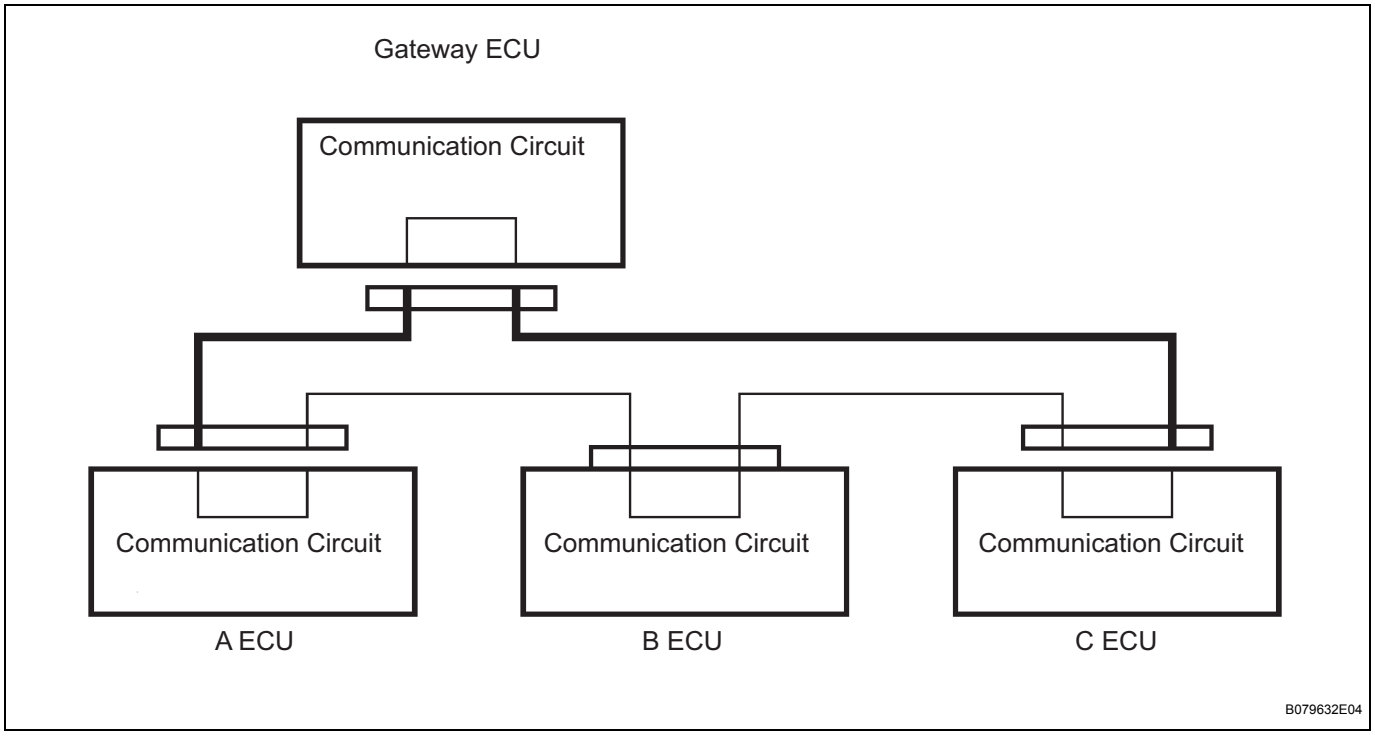

(1) Disconnect the A ECU, C ECU and gateway ECU connectors.
(2) Measure the voltage between the specified terminals on the wire harness side connectors.

Voltage

Tester Connection	Specified Condition
A ECU connector / gateway ECU connector - Body ground	0 V
C ECU connector / gateway ECU connector - Body ground	0 V

(3) Measure the resistance between the specified terminals on the wire harness side connectors.

Resistance

Tester Connection	Specified Condition
A ECU connector / gateway ECU connector - Body ground	10 kΩ or higher
C ECU connector / gateway ECU connector - Body ground	10 kΩ or higher

HINT:
- The A ECU represents the A/C ECU.
- The C ECU represents the combination meter ECU.

NG → **REPAIR OR REPLACE WIRE HARNESS BETWEEN GATEWAY ECU AND A ECU OR C ECU**

OK

REPLACE MULTIPLEX NETWORK GATEWAY ECU

MP

DTC	B1248	AVC-LAN Communication Impossible

DESCRIPTION

This DTC is detected when communication between the AVC-LAN (radio receiver assembly or multi-display assembly) and multiplex network gateway ECU stops for more than 10 seconds.

DTC No.	DTC Detection Condition	Trouble Area
B1248	AVC-LAN communication is impossible	• AVC-LAN (radio receiver assembly or multi-display assembly) • Wire harness

INSPECTION PROCEDURE

1	CHECK OPERATION

(a) Check for AVC-LAN communication DTCs.
OK:
AVC-LAN communication DTCs are not output.

NG → **GO TO "DIAGNOSTICS TROUBLE CODE CHART" OF AUDIO SYSTEM OR NAVIGATION SYSTEM**

OK

GO TO "PROBLEM SYMPTOMS TABLE" OF AUDIO SYSTEM OR NAVIGATION SYSTEM

DTC	B1262	A/C ECU Communication Stop

DESCRIPTION

This DTC is detected when communication between the A/C control (A/C ECU) and gateway ECU stops for more than 10 seconds.

DTC No.	DTC Detection Condition	Trouble Area
B1262	A/C ECU communication stops	• A/C ECU • Wire harness

WIRING DIAGRAM

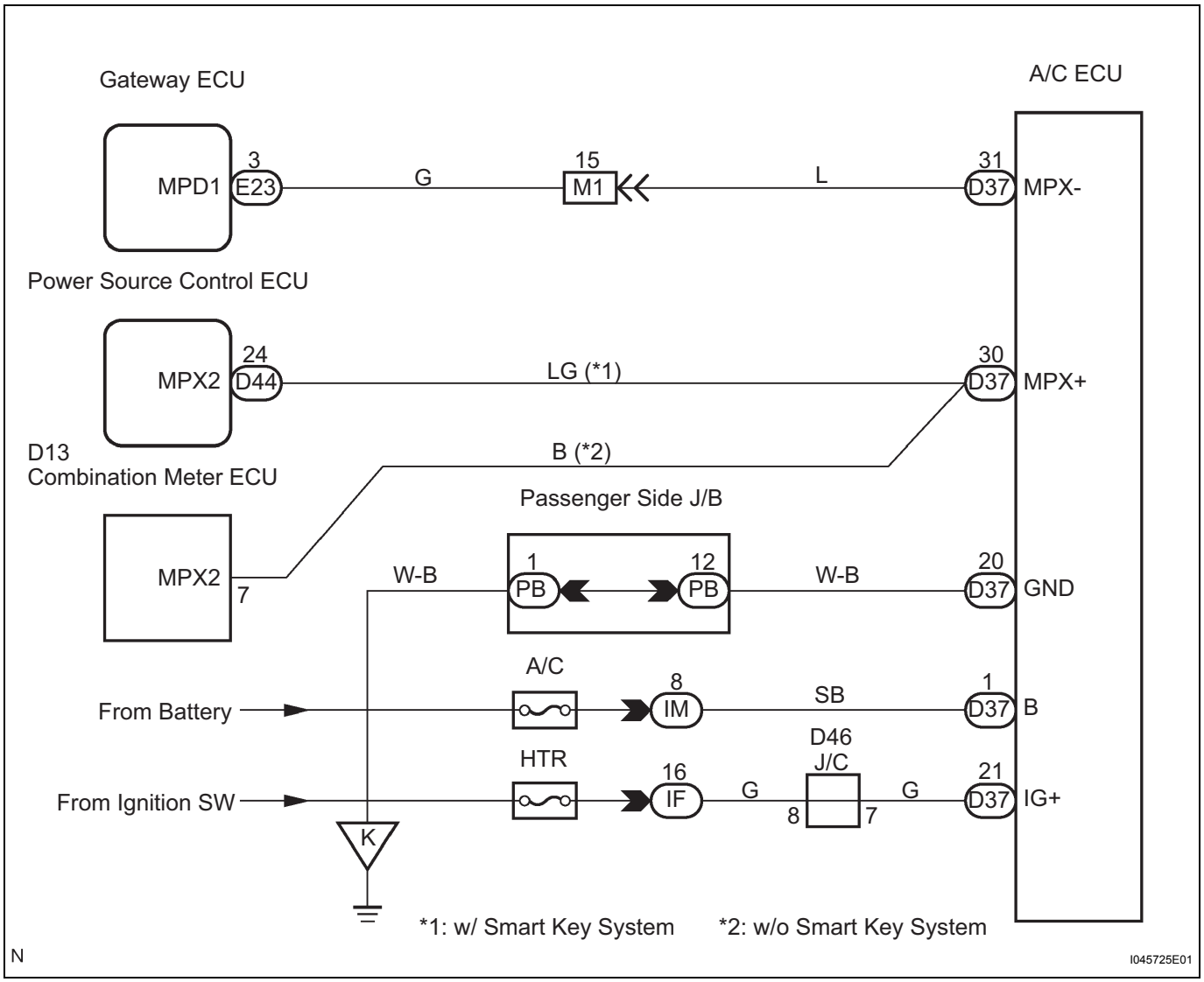

INSPECTION PROCEDURE

1	CHECK HARNESS AND CONNECTOR (A/C ECU - BATTERY AND BODY GROUND)

(a) Disconnect the D37 ECU connector.

MP

A/C ECU Connector Front View:

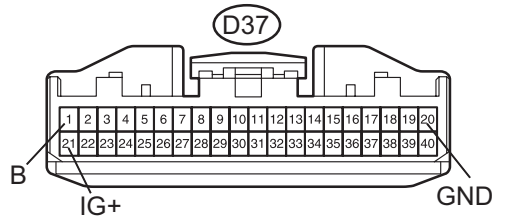

(b) Measure the voltage between the specified terminals on the wire harness side connector.

Voltage

Tester Connection	Condition	Specified Condition
D37-21 (IG+) - Body ground	Ignition switch OFF → ON (IG)	0 V → 10 to 14 V
D37-1 (B) - Body ground	Always	10 to 14 V

(c) Measure the resistance between the specified terminals on the wire harness side connector.

Resistance

Tester Connection	Condition	Specified Condition
D37-20 (GND) - Body ground	Always	Below 1 Ω

NG → **REPAIR OR REPLACE HARNESS OR CONNECTOR**

OK

2	CHECK RESISTANCE OF COMMUNICATION LINE

(a) Disconnect the D37, E23, and D44[*1] or D13[*2] ECU connectors.

A/C ECU Connector Front View:

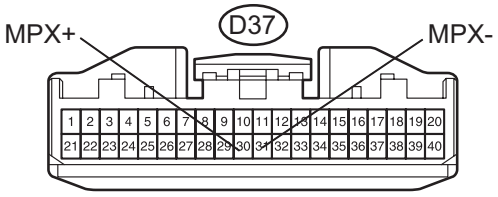

Power Source Control ECU Connector Front View:

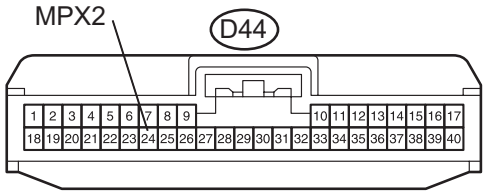

Combination Meter ECU Connector Front View:

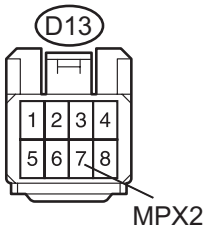

Gateway ECU Connector Front View:

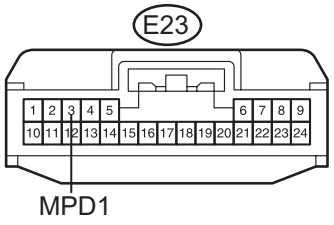

N

C129922E01

(b) Measure the resistance between the specified terminals on the wire harness side connectors.

Resistance

Tester Connection	Specified Condition
D37-30 (MPX+) - D44-24 (MPX2) *1	Below 1 Ω
D37-30 (MPX+) - D13-7 (MPX2) *2	Below 1 Ω
D37-31 (MPX-) - E23-3 (MPD1)	Below 1 Ω

HINT:

*1: w/ Smart key system

*2: w/o Smart key system

Result

Result	Proceed to
Both are OK	A
One is OK	B
Both are NG	C

B → **REPLACE A/C ECU AND REPAIR OR REPLACE HARNESS OR CONNECTOR**

C → **REPAIR OR REPLACE HARNESS OR CONNECTOR**

A

REPLACE A/C ECU

DTC	B1271	Combination Meter ECU Communication Stop

DESCRIPTION

This DTC is detected when communication between the combination meter (combination meter ECU) and gateway ECU stops for more than 10 seconds.

DTC No.	DTC Detection Condition	Trouble Area
B1271	Combination meter ECU communication stops	• Combination meter ECU • Wire harness

WIRING DIAGRAM

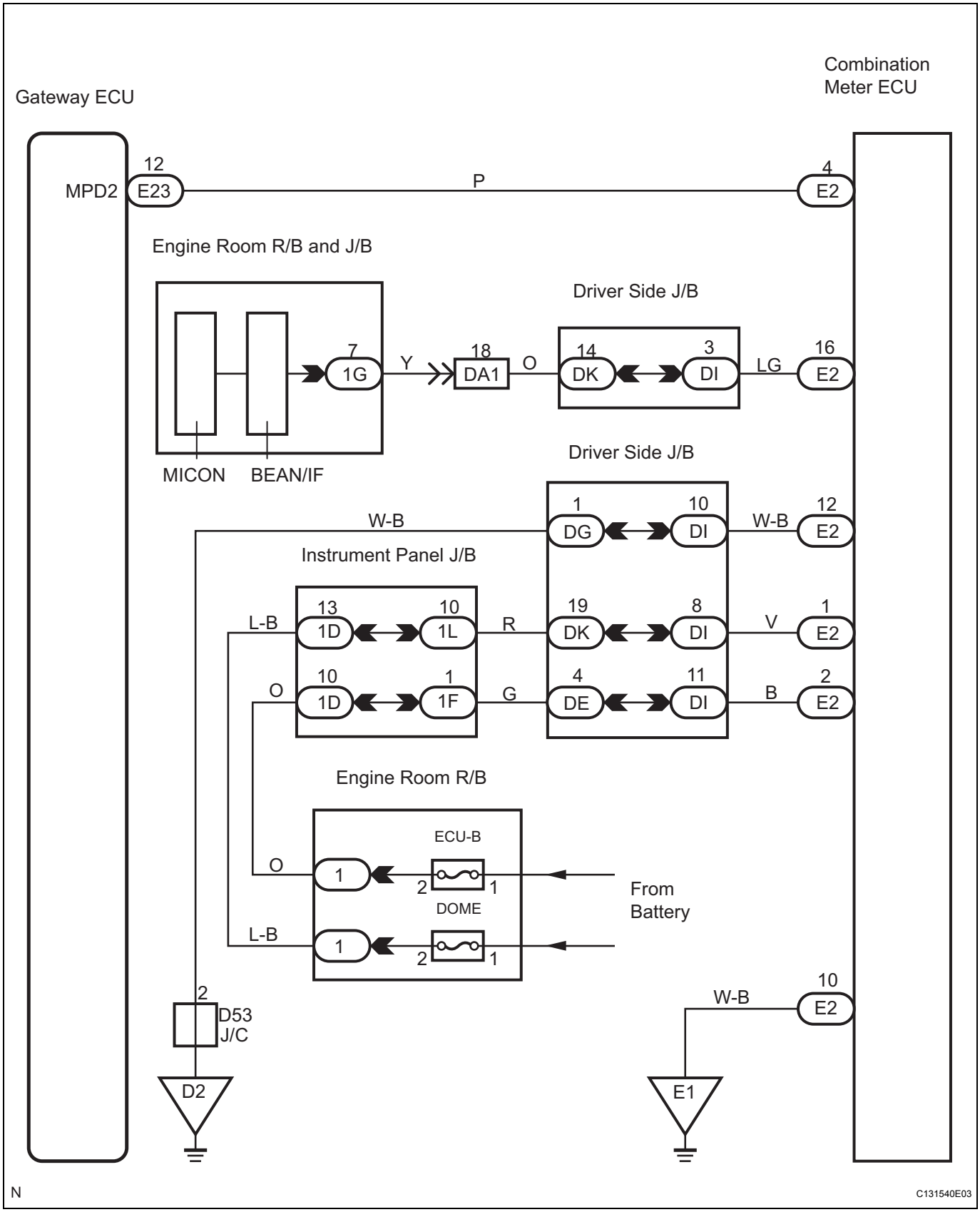

MP

INSPECTION PROCEDURE

1	CHECK WIRE HARNESS (COMBINATION METER ECU - BATTERY AND BODY GROUND)

Combination Meter ECU Connector Front View:

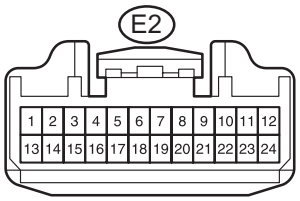

N C129923E01

(a) Disconnect the E2 meter connector.
(b) Measure the voltage between the specified terminals on the wire harness side connectors.
Voltage

Tester Connection	Specified Condition
E2-1 - Body ground	10 to 14 V
E2-2 - Body ground	10 to 14 V

(c) Measure the resistance between the specified terminals on the wire harness side connectors.
Resistance

Tester Connection	Specified Condition
E2-10 - Body ground	Below 1 Ω
E2-12 - Body ground	Below 1 Ω

NG → **REPAIR OR REPLACE HARNESS OR CONNECTOR**

OK

2	CHECK RESISTANCE OF COMMUNICATION LINE

(a) Disconnect the E2, E23 and 1G ECU connectors.

Combination Meter ECU Connector Front View:

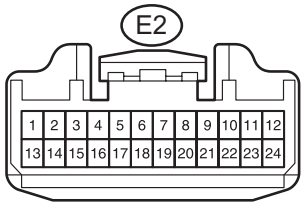

Gateway ECU Connector Front View:

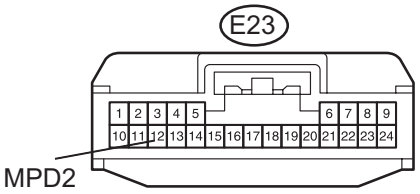

Engine Room R/B & J/B Connector Front View:

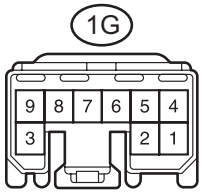

N

C129924E01

(b) Measure the resistance between the specified terminals on the wire harness side connectors.

Resistance

Tester Condition	Specified Condition
E2-4 - E23-12 (MDP2)	Below 1 Ω
E2-16 - 1G-7	Below 1 Ω

Result

Result	Proceed to
Both are OK	A
One is OK	B
Both are NG	C

B → **REPLACE COMBINATION METER ECU AND REPAIR OR REPLACE HARNESS OR CONNECTOR**

C → **REPAIR OR REPLACE HARNESS OR CONNECTOR**

A

REPLACE COMBINATION METER ECU

DTC	B1272	Power Seat ECU Communication Stop

DESCRIPTION

This DTC is detected when communication between the power seat ECU and gateway ECU stops for more than 10 seconds.

DTC No.	DTC Detection Condition	Trouble Area
B1272	Power seat ECU communication stops	• Driver seat ECU (Power seat ECU) • Wire harness

WIRING DIAGRAM

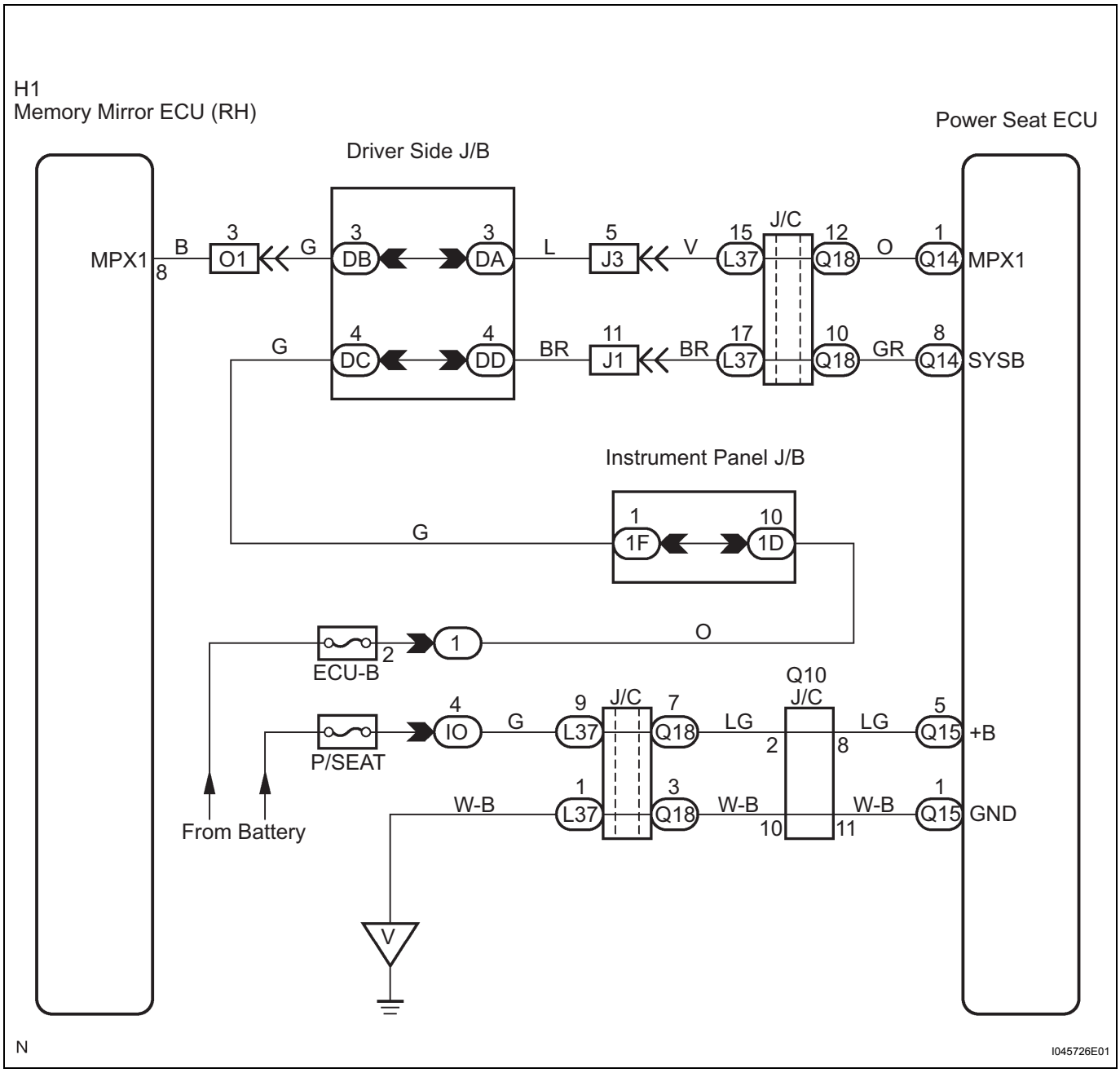

MP

INSPECTION PROCEDURE

1	CHECK HARNESS AND CONNECTOR (POWER SEAT ECU - BATTERY AND BODY GROUND)

Power Seat ECU Connector Front View:

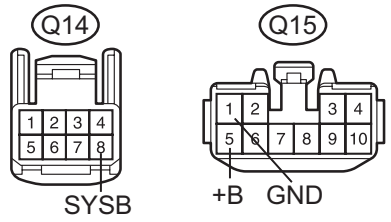

N C129925E01

(a) Disconnect the Q14 and Q15 ECU connectors.
(b) Measure the voltage between the specified terminals on the wire harness side connector.
Voltage

Tester Connection	Specified Condition
Q14-8 (SYSB) - Body ground	10 to 14 V
Q15-5 (+B) - Body ground	10 to 14 V

(c) Measure the resistance between the specified terminals on the wire harness side connector.
Resistance

Tester Connection	Specified Condition
Q15-1 (GND) - Body ground	Below 1 Ω

NG → **REPAIR OR REPLACE HARNESS OR CONNECTOR**

OK

2	CHECK RESISTANCE OF COMMUNICATION LINE

Power Seat ECU Connector Front View:

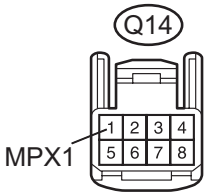

Memory Mirror ECU (RH) Connector Front View:

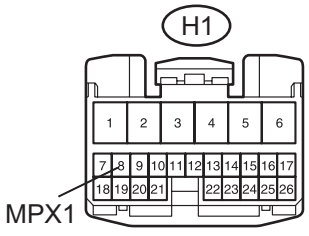

N C129926E01

(a) Disconnect the Q14 and H1 ECU connectors.
(b) Measure the resistance between the specified terminals on the wire harness side connector.
Resistance

Tester Connection	Specified Condition
Q14-1 (MPX1) - H1-8 (MPX1)	Below 1 Ω

NG → **REPAIR OR REPLACE HARNESS OR CONNECTOR**

MP

OK

REPLACE POWER SEAT ECU

DTC	B1275	Accessory Bus Buffer Communication Stop

DESCRIPTION

This DTC is detected when communication between the BEAN bus buffer and the gateway ECU stops for more than 10 seconds.

DTC No.	DTC Detection Condition	Trouble Area
B1275	BEAN bus buffer communication stops	• Option connector (BEAN bus buffer) • Wire harness

WIRING DIAGRAM

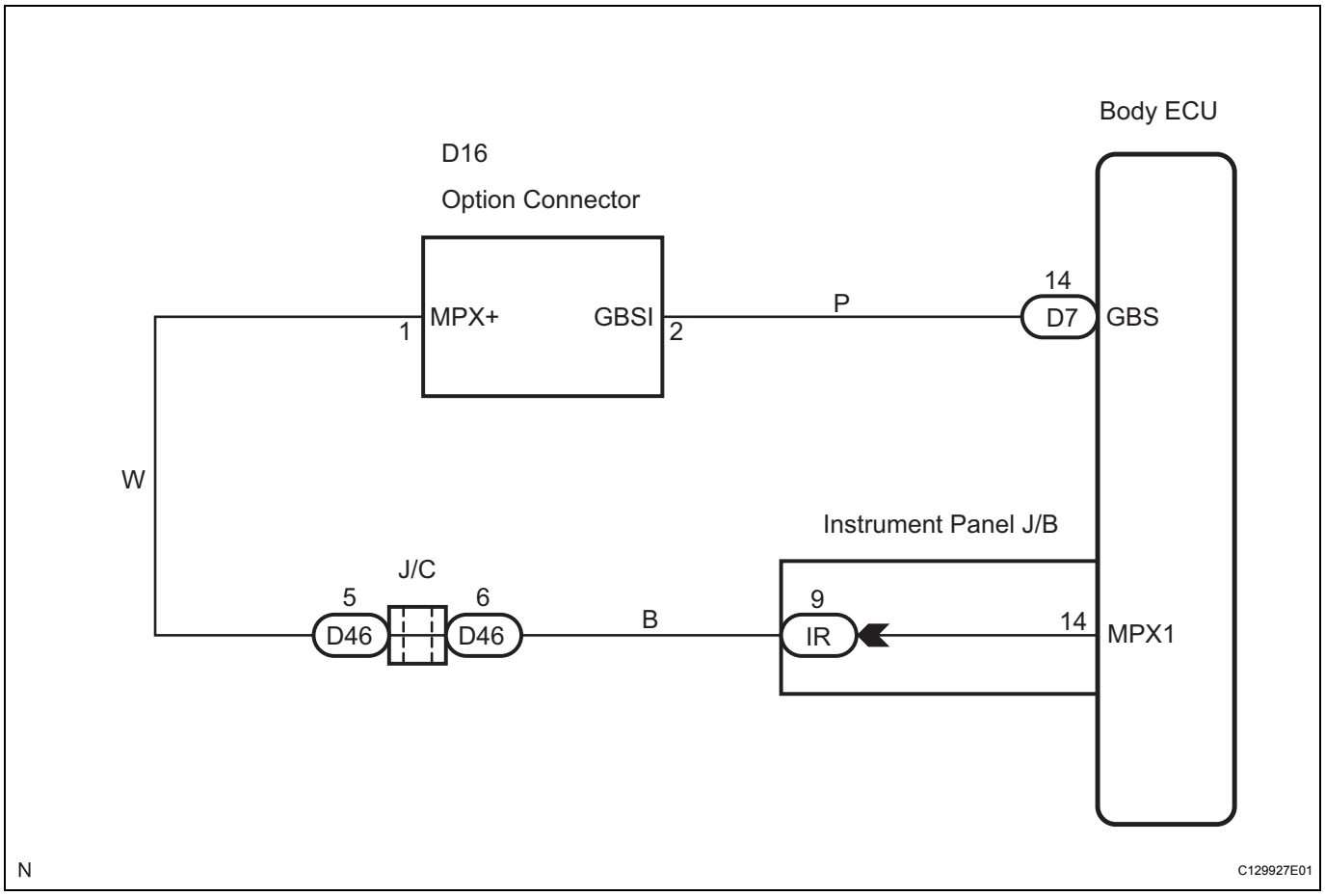

INSPECTION PROCEDURE

1	CHECK RESISTANCE OF COMMUNICATION LINE

(a) Disconnect the D16, D7 and IR connectors.

MP

Option Connector Front View:

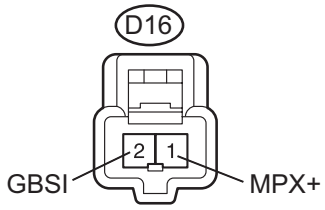

Body ECU Connector Front View:

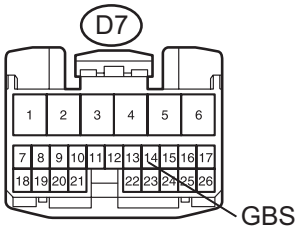

Instrument Panel J/B Connector Front View:

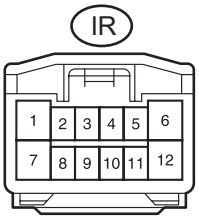

N

C129988E01

(b) Measure the resistance between the specified terminals on the wire harness side connectors.

Resistance

Tester Connection	Specified Condition
D16-1 (MPX+) - IR-9	Below 1 Ω
D16-2 (GBSI) - D7-14 (GBS)	Below 1 Ω

Result

Result	Proceed to
Both are OK	A
One is OK	B
Both are NG	C

B → **REPLACE OPTION CONNECTOR AND REPAIR OR REPLACE HARNESS OR CONNECTOR**

C → **REPAIR OR REPLACE HARNESS OR CONNECTOR**

A

REPLACE OPTION CONNECTOR

DTC	B1278	Combination Switch ECU Communication Stop

DESCRIPTION

This DTC is detected when communication between the combination switch (combination switch ECU) and gateway ECU stops for more than 10 seconds.

DTC No.	DTC Detection Condition	Trouble Area
B1278	Combination switch ECU communication stops	• Combination switch • Wire harness

WIRING DIAGRAM

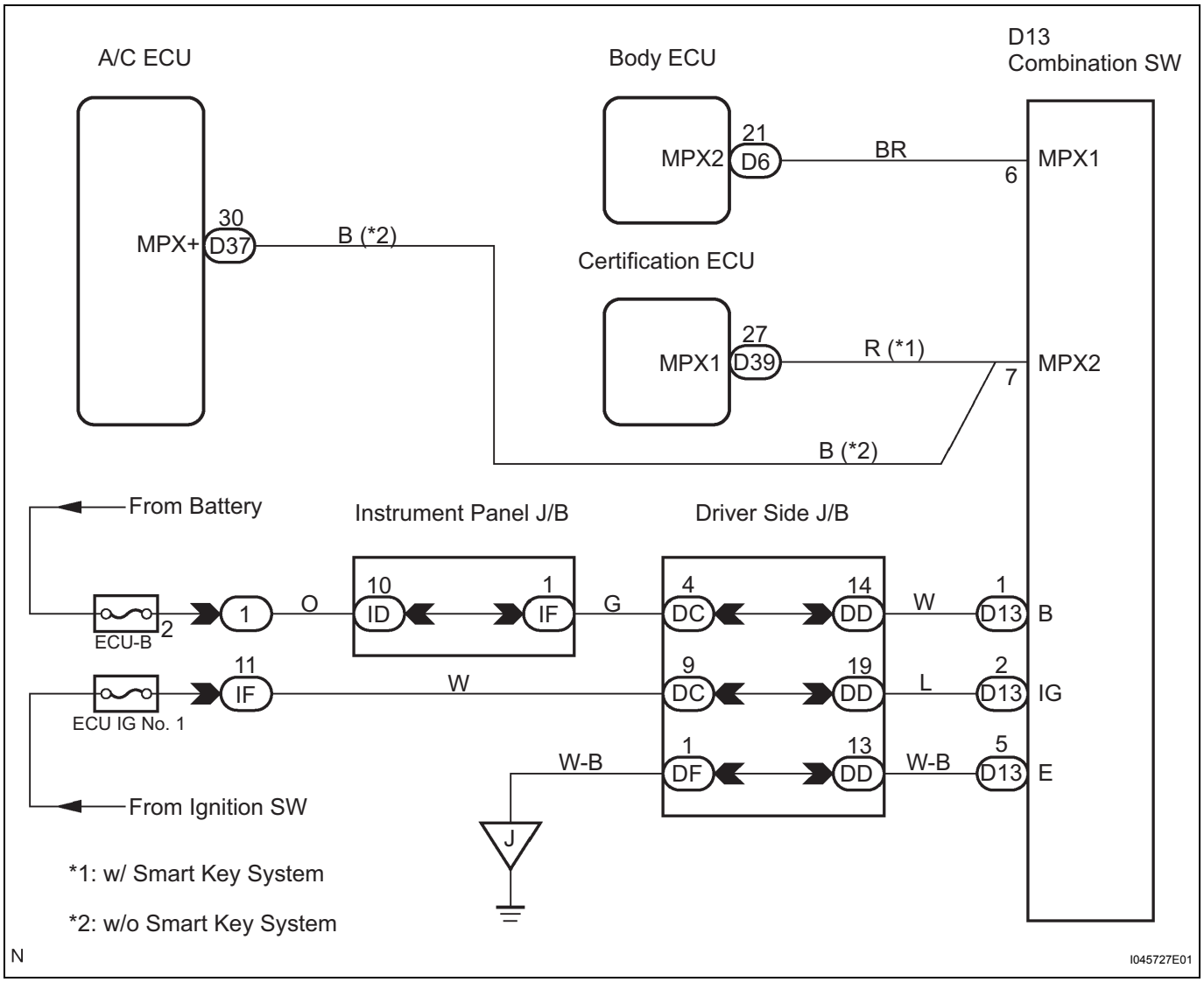

MP

INSPECTION PROCEDURE

1	CHECK HARNESS AND CONNECTOR (COMBINATION SWITCH - BATTERY AND BODY GROUND)

(a) Disconnect the D13 combination switch connector.

Combination Switch Connector Front View:

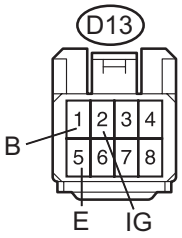

N C129989E01

(b) Measure the voltage between the specified terminals on the wire harness side connector.

Voltage

Tester Connection	Condition	Specified Condition
D13-1 (B) - Body ground	Always	10 to 14 V
D13-2 (IG) - Body ground	Ignition switch OFF → ON (IG)	0 V → 10 to 14 V

(c) Measure the resistance between the specified terminals on the wire harness side connector.

Resistance

Tester Connection	Condition	Specified Condition
D13-5 (E) - Body ground	Always	Below 1 Ω

NG → **REPAIR OR REPLACE HARNESS OR CONNECTOR**

OK

2	CHECK RESISTANCE OF COMMUNICATION LINE

(a) Disconnect the D13, D6, and D39[*1] or D37[*2] ECU connectors.

Combination Switch ECU Connector Front View:

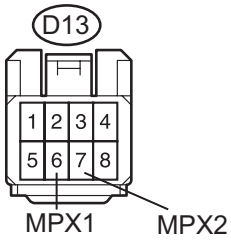

Body ECU Connector Front View:

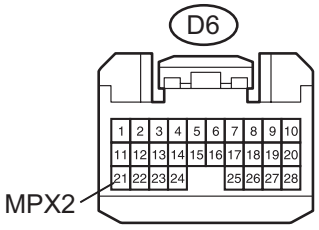

Certification ECU Connector Front View:

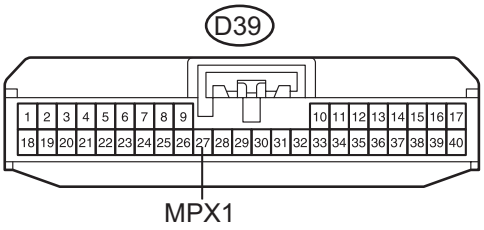

A/C ECU Connector Front View:

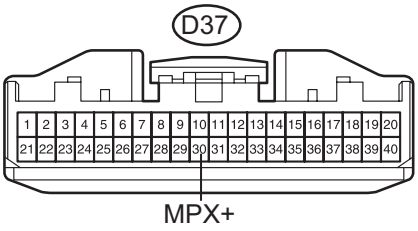

N

C129990E01

(b) Measure the resistance between the specified terminals on the wire harness side connectors.

Resistance

Tester Connection	Specified Condition
D13-6 (MPX1) - D6-21 (MPX2)	Below 1 Ω
D13-7 (MPX2) - D39-27 (MPX1) *1	Below 1 Ω
D13-7 (MPX2) - D37-30 (MPX+) *2	Below 1 Ω

HINT:

*1: w/ Smart key system

*2: w/o Smart key system

Result

Result	Proceed to
Both are OK	A
One is OK	B
Both are NG	C

B → **REPLACE COMBINATION SWITCH AND REPAIR OR REPLACE HARNESS OR CONNECTOR**

C → **REPAIR OR REPLACE HARNESS OR CONNECTOR**

A

REPLACE COMBINATION SWITCH ECU

MP

DTC	B1279	Rain Sensor Communication Stop

DESCRIPTION

This DTC is detected when communication between the rain sensor and overhead J/B stops for more than 10 seconds.

DTC No.	DTC Detection Condition	Trouble Area
B1279	Rain sensor communication stops	• Rain sensor • Wire harness

WIRING DIAGRAM

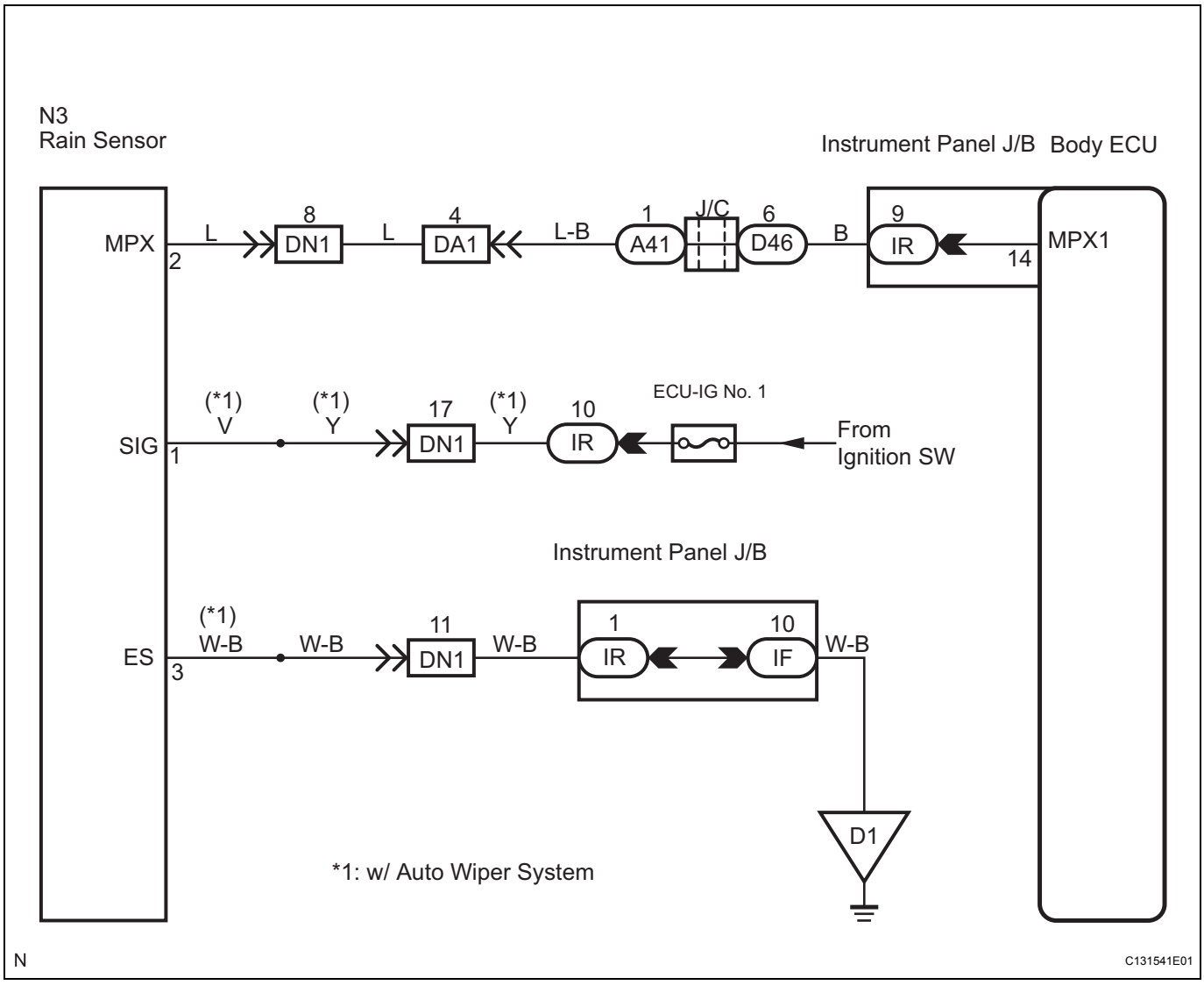

INSPECTION PROCEDURE

1	CHECK WIRE HARNESS (RAIN SENSOR - BATTERY AND BODY GROUND)

(a) Disconnect the O3 sensor connector.

Rain Sensor Connector Front View:

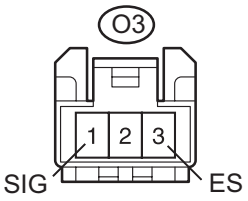

N C129991E01

(b) Measure the voltage between the specified terminals on the wire harness side connector.

Voltage

Tester Connection	Condition	Specified Condition
O3-1 (SIG) - Body ground	Always	10 to 14 V

(c) Measure the resistance between the specified terminals on the wire harness side connector.

Resistance

Tester Connection	Condition	Specified Condition
O3-3 (ES) - Body ground	Always	Below 1 Ω

NG → **REPAIR OR REPLACE HARNESS OR CONNECTOR**

OK

2 CHECK RESISTANCE OF COMMUNICATION LINE

Rain Sensor Connector Front View:

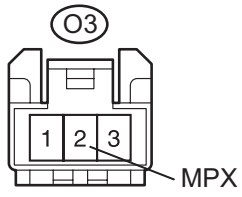

Instrument Panel J/B Connector Front View:

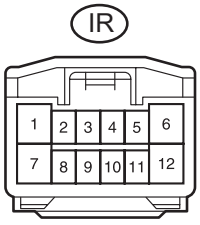

N C129992E01

(a) Disconnect the O3 and IR ECU connectors.
(b) Measure the resistance between the specified terminals on the wire harness side connector.

Resistance

Tester Connection	Specified Condition
O3-2 (MPX) - IR-9	Below 1 Ω

NG → **REPAIR OR REPLACE HARNESS OR CONNECTOR**

OK

REPLACE RAIN SENSOR

MP

DTC	B1296	Front Light ECU Communication Stop

DESCRIPTION

This DTC is detected when communication between the front controller and gateway ECU stops for more than 10 seconds.

DTC No.	DTC Detection Condition	Trouble Area
B1296	Front controller communication stops	• Front controller • Wire harness

WIRING DIAGRAM

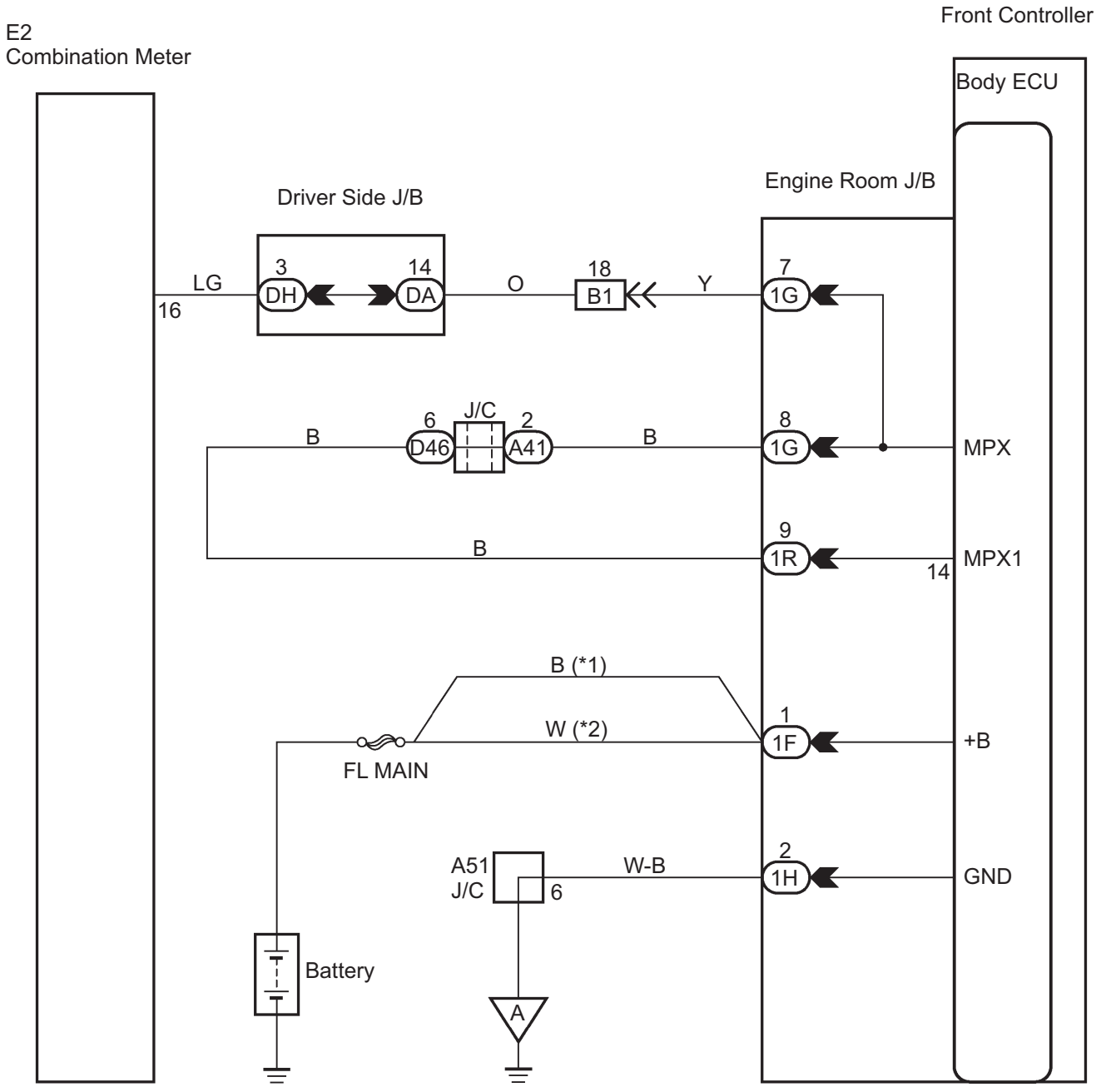

MP

INSPECTION PROCEDURE

1	CHECK HARNESS AND CONNECTOR (FRONT CONTROLLER - BATTERY AND BODY GROUND)

Front Controller:

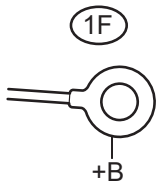

Front Controller Connector Front View:

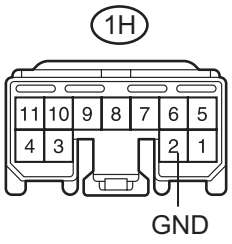

N C129993E01

(a) Disconnect the 1F and 1H front controller connectors.
(b) Measure the voltage between the specified terminals on the wire harness side connector.
Voltage

Tester Connection	Condition	Specified Condition
1F-1 (+B) - Body ground	Always	10 to 14 V

(c) Measure the resistance between the specified terminals on the wire harness side connector.
Resistance

Tester Connection	Condition	Specified Condition
1H-2 (GND) - Body ground	Always	Below 1 Ω

NG → **REPAIR OR REPLACE HARNESS OR CONNECTOR**

OK

2	CHECK RESISTANCE OF COMMUNICATION LINE

(a) Disconnect the 1G, 1R, and E2 connectors.

Body ECU Connector Front View:

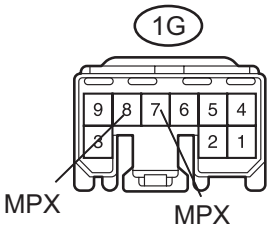

Front Controller Connector Front View:

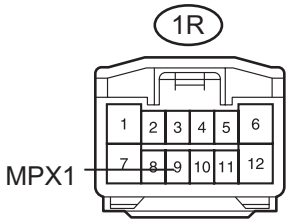

Combination Meter Connector Front View:

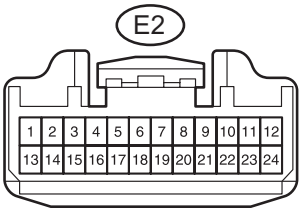

N C129994E01

(b) Measure the resistance between the specified terminals on the wire harness side connector.

Resistance

Tester Connection	Specified Condition
1G-7 (MPX) - E2-16	Below 1 Ω
1G-8 (MPX) - 1R-9 (MPX1)	Below 1 Ω

NG → **REPAIR OR REPLACE HARNESS OR CONNECTOR**

OK

REPLACE FRONT CONTROLLER

NAVIGATION SYSTEM

PRECAUTION

1. INITIALIZATION

NOTICE:

When disconnecting the negative (-) battery terminal, initialize the following systems after the terminal is reconnected.

System Name	See procedure
Power Window Control	IN-29
Sliding Roof System	

2. EXPRESSIONS OF IGNITION SWITCH

The type of ignition switch used on this model differs according to the specifications of the vehicle.

The expressions listed in the table below are used in this section.

Expression	Switch Type	
	Ignition Switch (position)	Engine Switch (condition)
Ignition Switch off	LOCK	Off
Ignition Switch on (IG)	ON	On (IG)
Ignition Switch on (ACC)	ACC	On (ACC)
Engine Start	START	Start

PARTS LOCATION

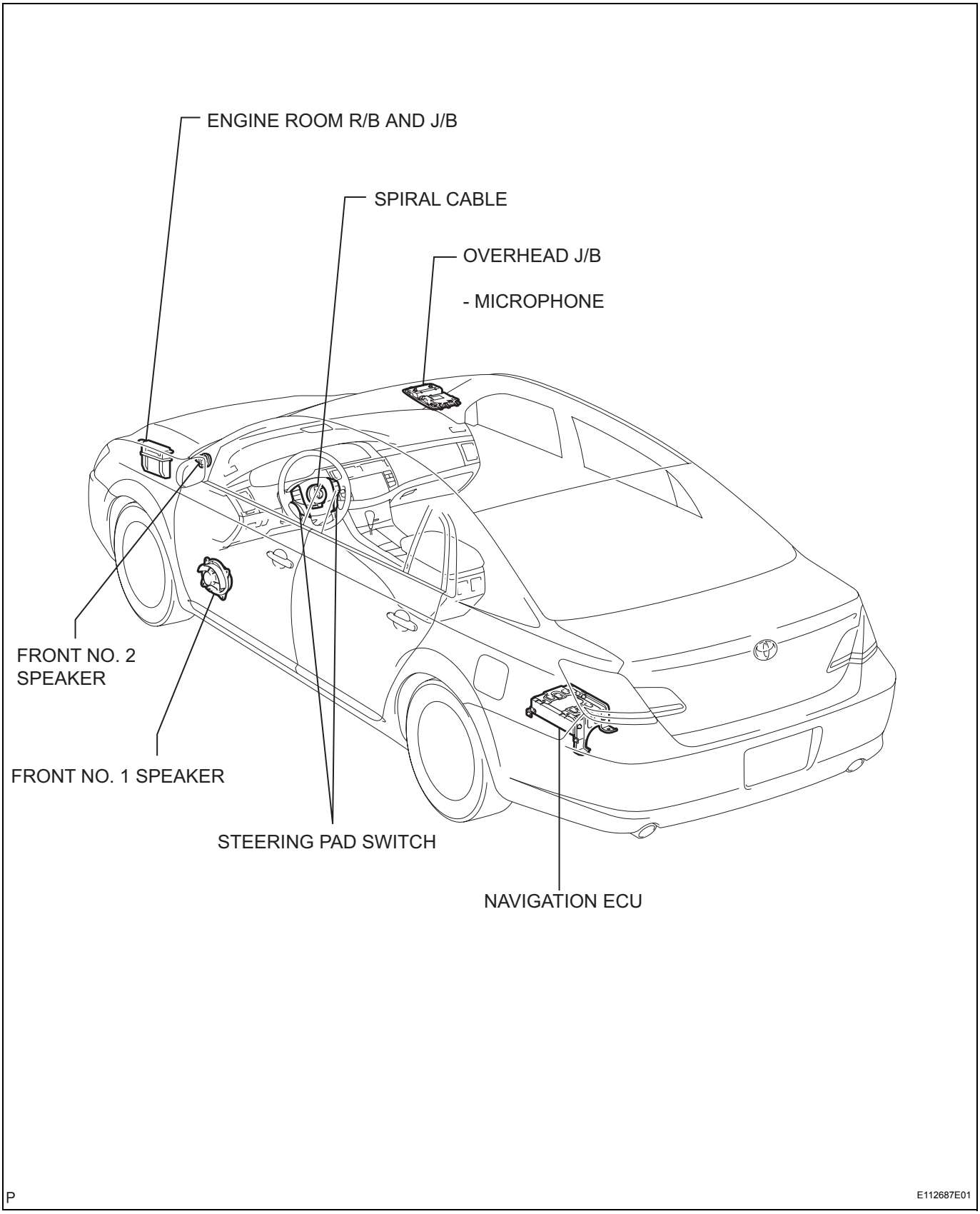

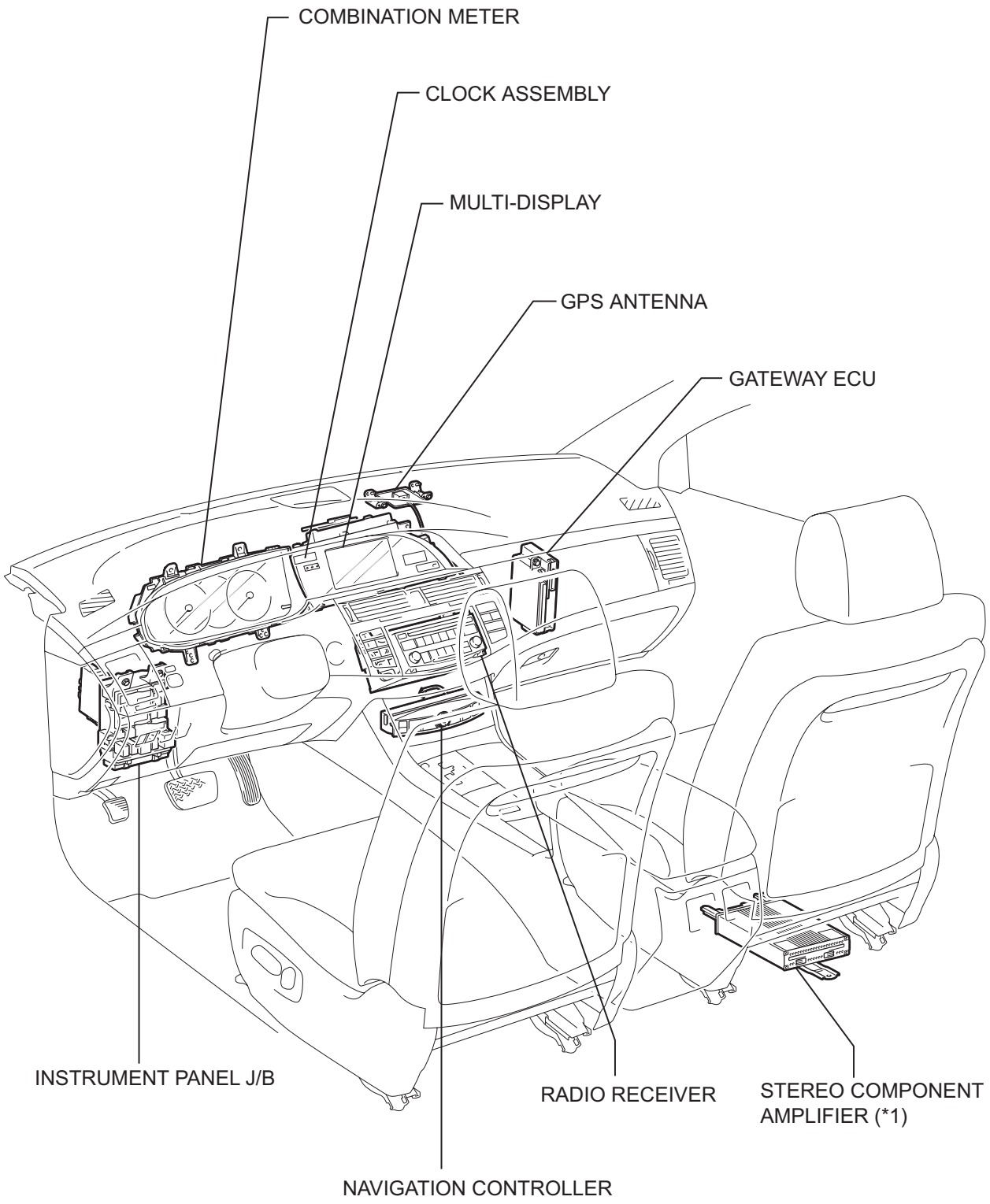

*1: 12 Speaker System

P

E112688E01

NS

SYSTEM DIAGRAM

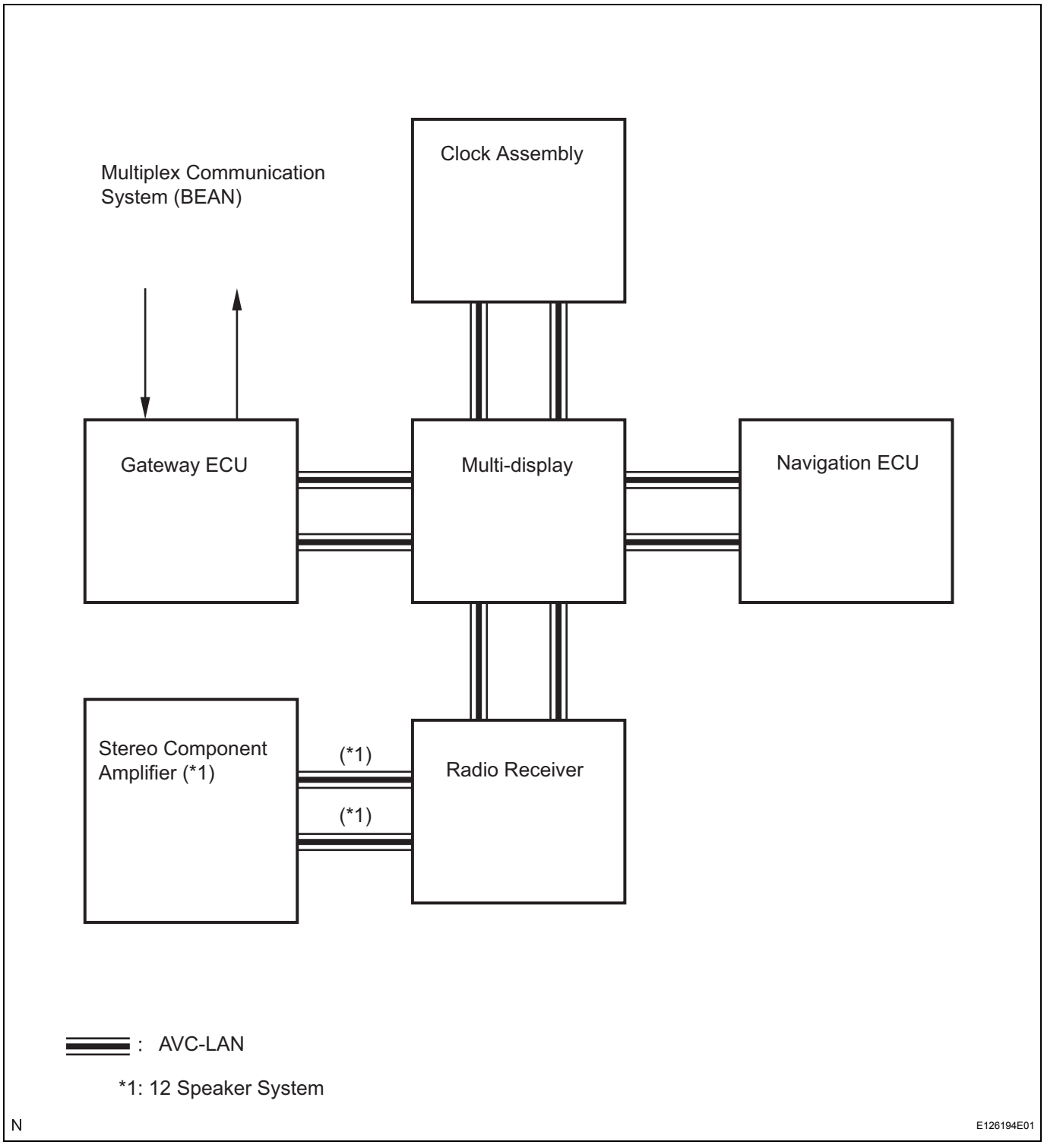

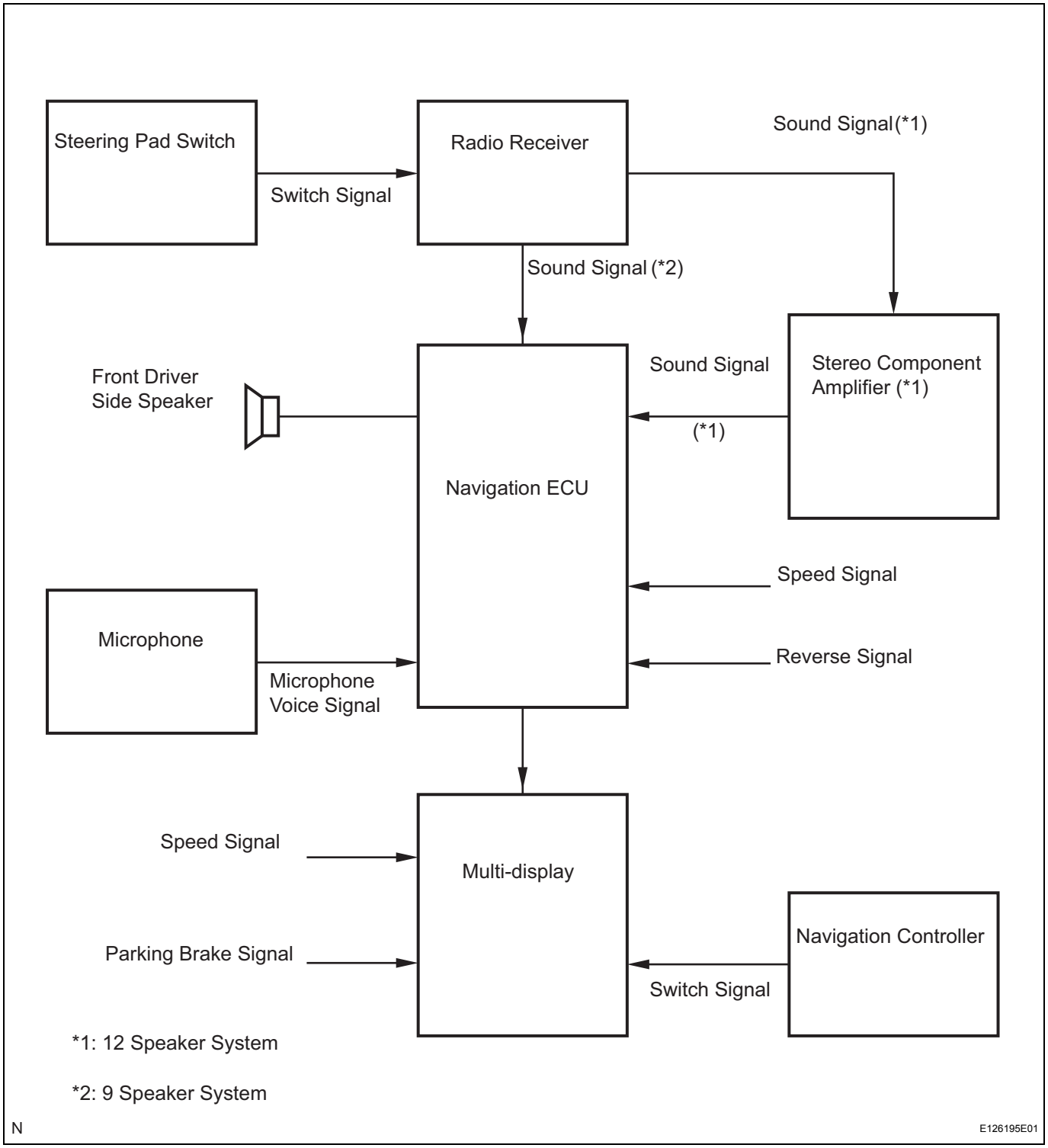
Steering Pad Switch
Switch Signal
Radio Receiver
Sound Signal (*1)
Sound Signal (*2)
Front Driver
Side Speaker
Navigation ECU
Sound Signal
(*1)
Stereo Component
Amplifier (*1)
Speed Signal
Microphone
Reverse Signal
Microphone
Voice Signal
Speed Signal
Multi-display
Navigation Controller
Parking Brake Signal
Switch Signal
*1: 12 Speaker System
*2: 9 Speaker System
N
E126195E01

NS

SYSTEM DESCRIPTION

1. Navigation system outline

(a) Vehicle position tracking methods

It is essential that the navigation system correctly tracks the current vehicle position and displays it on the map. There are 2 methods to track the current vehicle position: autonomous (dead reckoning) and GPS* (satellite) navigation. Both navigation methods are used in conjunction with each other.

* GPS (Global Positioning System)

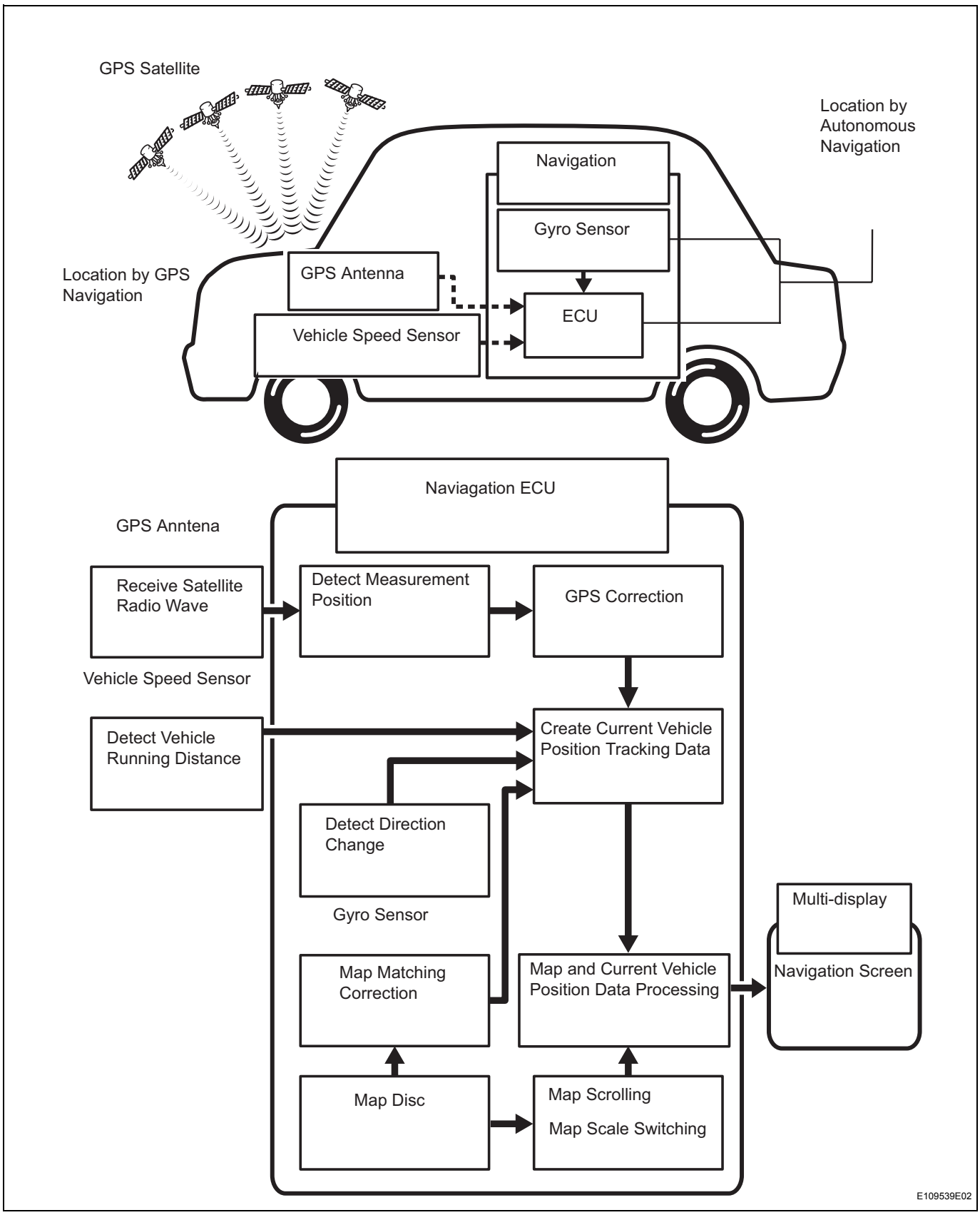

Operation	Description
Vehicle Position Calculation	The navigation ECU calculates the current vehicle position (direction and current position) using the direction deviation signal from the gyro sensor and the running distance signal from the vehicle speed sensor and creates the driving route.
Map Display Processing	The navigation ECU displays the vehicle track on the map by processing the vehicle position data, vehicle running track, and map data from the map disc.

NS

Operation	Description
Map Matching	The map data from the map disc is compared to the vehicle position and running track data. Then, the vehicle position is matched with the nearest road.
GPS Correction	The vehicle position is matched to the position measured by GPS. Then, the measurement position data from the GPS unit is compared with the vehicle position and running track data. If the position is widely different, the GPS measurement position is used.
Distance Correction	The running distance signal from the vehicle speed sensor includes the error caused by tire wear and slippage between the tires and road surface. Distance correction is performed to account for this. The navigation ECU automatically offsets the running distance signal to make up for the difference between it and the distance data of the map. The offset is automatically updated.

HINT:
The combination of autonomous and GPS navigation makes it possible to display the vehicle position even when the vehicle is in places where the GPS radio wave cannot receive a signal. When only autonomous navigation is used, however, the mapping accuracy may slightly decline.

Navigation is performed even where the GPS radio wave does not reach.

- In a tunnel
- In an indoor parking lot
- Between tall buildings
- Under an overpass
- On a forest or tree-lined path

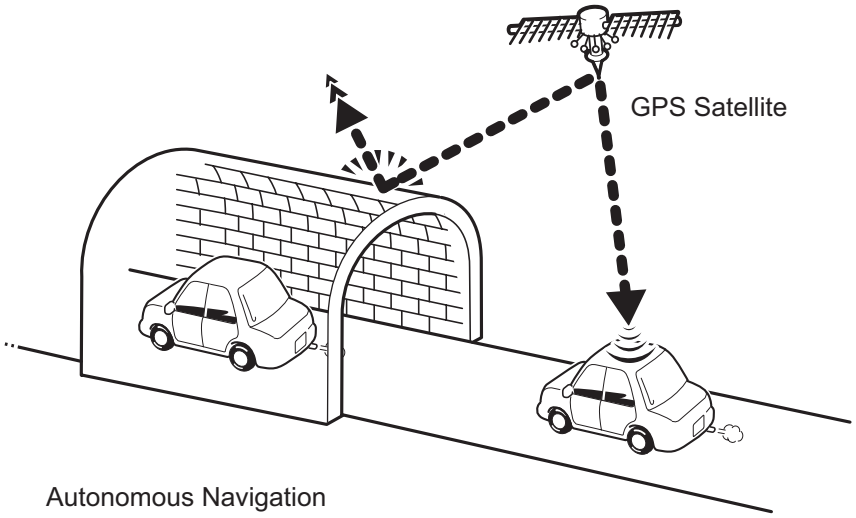

Autonomous Navigation

Autonomous Navigation and
GPS Wave Navigation

P

I100028E07

(b) Autonomous navigation
This method determines the relative vehicle position based on the running track determined by the gyro and vehicle speed sensors located in the navigation ECU.
(1) Gyro sensor
Calculates the direction by detecting angular velocity. It is located in the navigation ECU.
(2) Vehicle speed sensor
Used to calculate the vehicle running distance.

(c) GPS navigation (Satellite navigation)
This method detects the absolute vehicle position using radio waves from a GPS satellite.
* GPS satellites were launched by the U.S. Department of Defence for military purposes.

Current longitude/latitude/altitude is determined using the radio wave arrival time from four satellites.

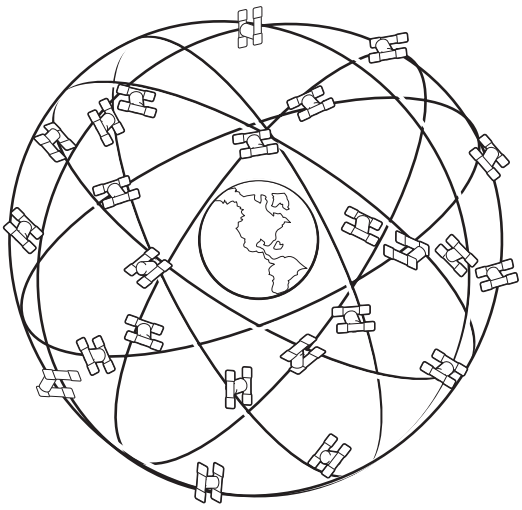

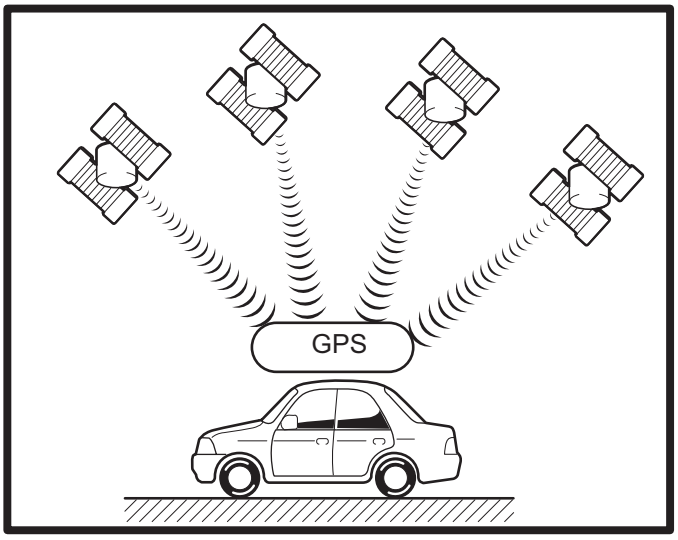

P

I100029E03

Number of satellites	Measurement	Description
2 or less	Measurement impossible	Vehicle position cannot be obtained because the number of satellites is not enough.
3	2-dimensional measurement is possible	Vehicle position is obtained based on the current longitude and latitude. (This is less precise than 3-dimensional measurement.)
4	3-dimensional measurement is possible	Vehicle position is obtained based on the current longitude, latitude and altitude.

(d) Map matching
The current driving route is calculated by autonomous navigation (according to the gyro sensor and vehicle speed sensor) and GPS navigation. This information is then compared with possible road shapes from the map data in the map disc and the vehicle position is set onto the most appropriate road.

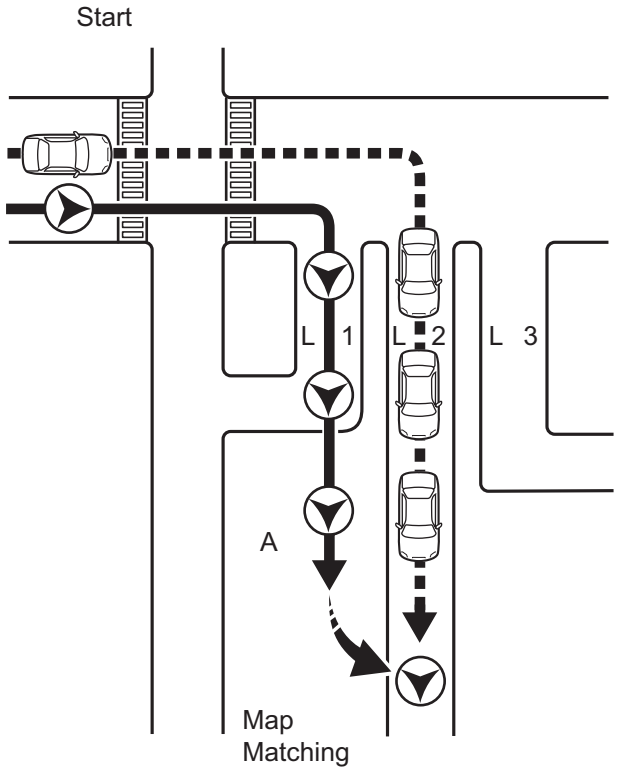

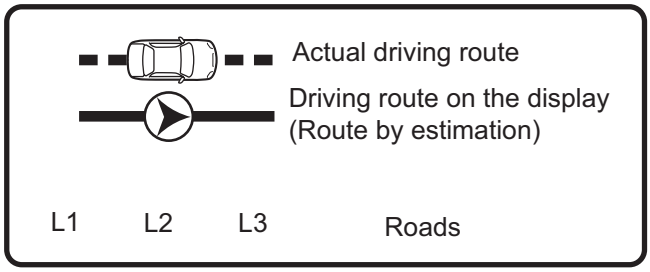

The system compares the shape of the roads L1, L2 and L3 to the estimated running track after the vehicle makes a right turn. At point A, the vehicle position differs enough from the shape of L1 that the display switches to the road L2.

P

I100030E08

2. DVD (Digital Versatile Disc) player outline (for navigation map)

(a) The navigation ECU uses a laser pickup to read the digital signals recorded on a DVD.
HINT:
- Do not disassemble any part of the navigation ECU.
- Do not apply oil to the navigation ECU.
- Do not insert anything but a DVD into the navigation ECU.

CAUTION:
Do not look directly at the laser pickup because the navigation system uses an invisible laser beam.
Be sure to only operate the navigation system as instructed.

3. AVC-LAN Description

(a) What is AVC-LAN?
AVC-LAN, an abbreviation for "Audio Visual Communication Local Area Network", is a united standard developed by the manufacturers in affiliation with Toyota Motor Corporation. This standard pertains to audio and visual signals as well as switch and communication signals.

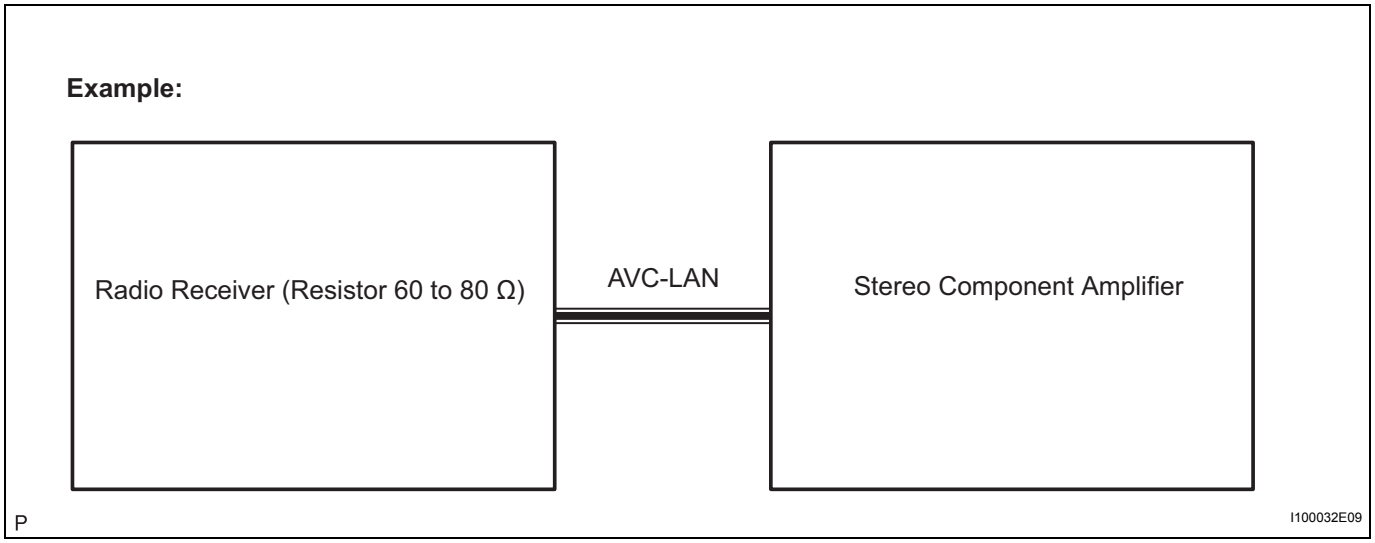

(b) Purpose:
Recently, car audio systems have rapidly developed and the functions have vastly changed. The conventional car audio system is being integrated with multi-media interfaces similar to those in navigation systems. At the same time, customers are demanding higher quality from their audio systems. This is merely an overview of the standardization background. The specific purposes are as follows.

(1) To solve sound problems, etc. caused by using components of different manufacturers through signal standardization.

(2) To allow each manufacturer to concentrate on developing products they do best. From this, reasonably priced products can be produced.
HINT:
- If a short to +B or short to ground is detected in the AVC-LAN circuit, communication is interrupted and the audio system will stop functioning.
- If an audio system is equipped with a navigation system, the multi-display unit acts as the master unit.
  If the navigation system is not equipped, the audio head unit acts as the master unit instead. If the radio and navigation assembly is equipped, it is the master unit.
- The radio receiver provides resistance to make communication possible.
- The car audio system with an AVC-LAN circuit has a diagnostic function.
- Each component has a specified number (3-digit) called a physical address. Each function has a number (2-digit) called a logical address.

4. Communication system outline

(a) Components of the navigation system communicate with each other via the AVC-LAN.

(b) The radio receiver has enough resistance (60 to 80 Ω) necessary for communication.

(c) If a short circuit or open circuit occurs in the AVC-LAN circuit, communication is interrupted and the navigation system will stop functioning.

5. Diagnostic function outline

(a) The audio system has a diagnostic function (the result is indicated on the master unit).

(b) A 3-digit hexadecimal component code (physical address) is allocated to each component on the AVC-LAN. Using this code, the component in the diagnostic function can be displayed.

HOW TO PROCEED WITH TROUBLESHOOTING

1	VEHICLE BROUGHT INTO A WORKSHOP

NEXT

2	DIAGNOSTIC QUESTIONING AND SYMPTOM CONFIRMATION

(a) Ask the customer about symptoms and confirm malfunctions.

- **THE SCREEN DISPLAYS NOTHING (GO TO STEP 7, AND PROCEED TO "No Image Appears on Multi-display")**
- **OTHER SYMPTOMS (GO TO STEP 3)**

3	CHECK MULTIPLEX COMMUNICATION SYSTEM (BEAN)

(a) Use the intelligent tester to check for normal function of the body multiplex communication system.

- **A CODE IS OUTPUT (PROCEED TO "BODY MULTIPLEX COMMUNICATION SYSTEM")**
- **A CODE IS NOT OUTPUT (GO TO STEP 4)**

4	CONFIRM THE SYSTEM NORMAL CONDITION

- **APPLICABLE (THIS IS NOT A MALFUNCTION)**
- **NOT APPLICABLE (GO TO STEP 5)**

5	CHECK THE DIAGNOSTIC TROUBLE CODES

HINT:

- If the system cannot enter the diagnosis mode, inspect each AVC-LAN communication signal and repair or replace problem parts.
- Even if the malfunction symptom is not confirmed, check for diagnostic trouble codes. This is because the system stores past diagnostic trouble codes.
- Check and clear past diagnostic trouble codes. Check the diagnostic trouble code and inspect the area the code indicates.

- **A CODE IS OUTPUT (GO TO STEP 6)**

NS

A CODE IS NOT OUTPUT (GO TO STEP 7)

6	DIAGNOSTIC TROUBLE CODE CHART

(a) Find the output code on the diagnostic trouble code chart.

NEXT → GO TO STEP 9

7	PROBLEM SYMPTOMS TABLE

(a) Find the applicable symptom code in the problem symptoms table.
HINT:
If the symptom does not recur and no code is output, perform the symptom reproduction method (See page IN-36).

- THERE IS AN APPLICABLE SYMPTOM CODE IN THE TABLE (GO TO STEP 9)
- THERE IS NO APPLICABLE SYMPTOM CODE IN THE TABLE (GO TO STEP 8)

8	CHECK THE ECU TERMINAL ARRANGEMENT BASED ON THE MALFUNCTION SYMPTOM

NEXT

9	CHECK THE CIRCUIT

(a) Adjust, repair or replace as necessary.

NEXT

10	RECHECK THE DIAGNOSTIC TROUBLE CODE

HINT:
After deleting the DTC, recheck for diagnostic trouble codes.

NEXT

11	PERFORM CONFIRMATION TEST

NEXT

END

SYSTEM NORMAL CONDITION CHECK

1. CHECK NORMAL CONDITION

(a) If the symptom is applicable to any of the following, it is intended behavior, and not a malfunction.

Symptom	Answer
A longer route than expected is chosen.	Depending on the road conditions, the navigation ECU may determine that a longer route is quicker.
Even when distance priority is high, the shortest route is not shown.	Some paths may not be advised due to safety concerns.
When the vehicle is put into motion immediately after the engine starts, the navigation system deviates from the actual position.	If the vehicle starts before the navigation system activates, the system may not react.
When running on certain types of roads, especially new roads, the vehicle position deviates from the actual position.	When the vehicle is driving on new roads not available on the map disc, the system attempts to match it to another nearby road, causing the position mark to deviate.

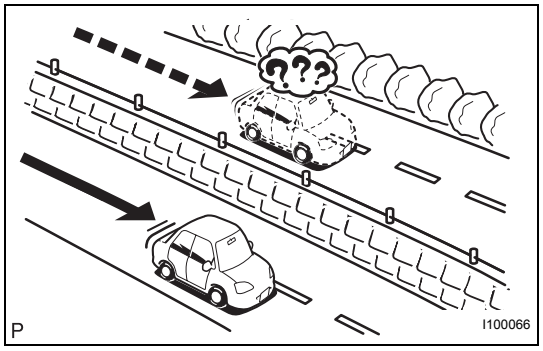

(b) The following symptoms are not a malfunction, but are caused by errors inherent in the GPS, gyro sensor, speed sensor, and navigation ECU.

(1) The current position mark may be displayed on a nearby parallel road.

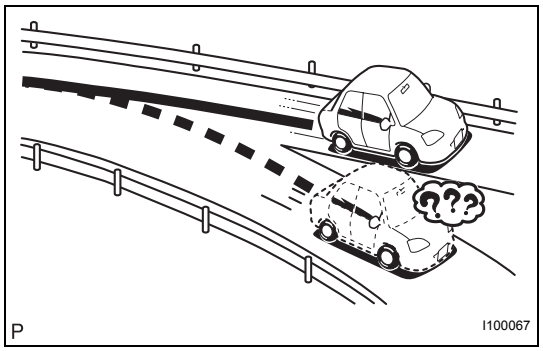

(2) Immediately after a fork in the road, the current vehicle position mark may be displayed on the wrong road.

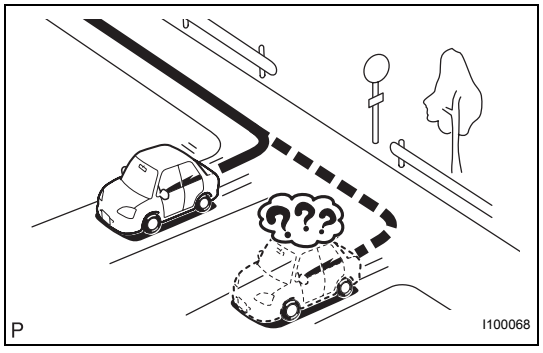

(3) When the vehicle turns right or left at an intersection, the current vehicle position mark may be displayed on a nearby parallel road.

NS

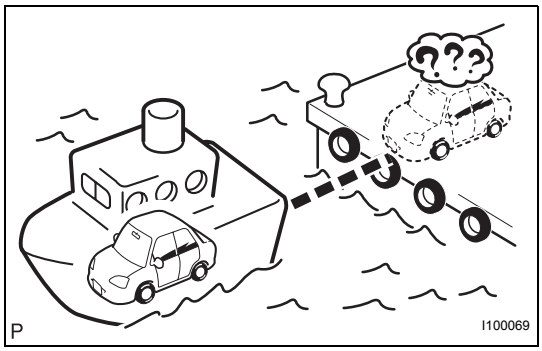

(4) When the vehicle is carried, such as on a ferry, and the vehicle itself is not running, the current vehicle position mark may be displayed in the position where the vehicle was until a measurement can be performed by GPS.

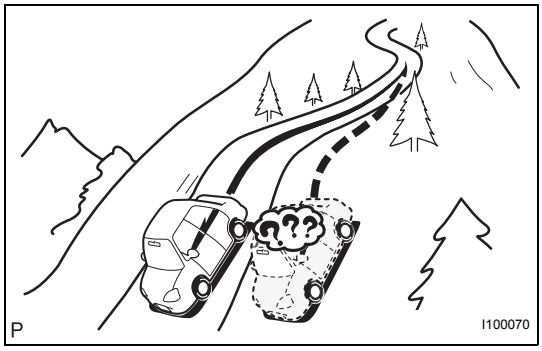

(5) When the vehicle runs on a steep hill, the current vehicle position mark may deviate from the correct position.

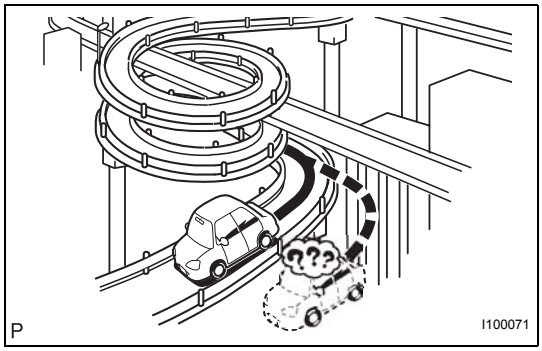

(6) When the vehicle makes a continuous turn of 360, 720, 1,080, etc. degrees, the current vehicle position mark may deviate from the correct position.

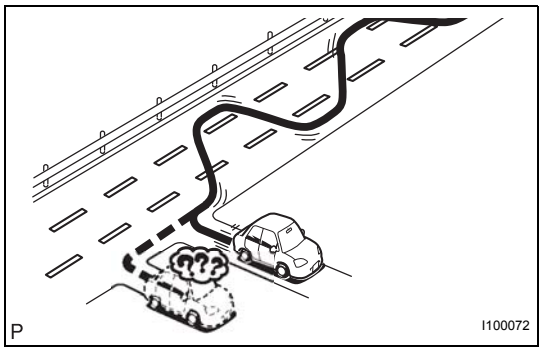

(7) When the vehicle moves erratically, such as constant lane changes, the current vehicle position mark may deviate from the correct position.

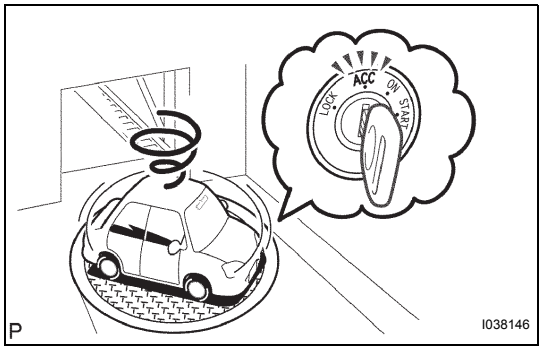

(8) When the ignition switch is turned on (ACC or IG) on a turntable before parking, the current vehicle position mark may not point in the correct direction. The same will occur when the vehicle comes out of parking.

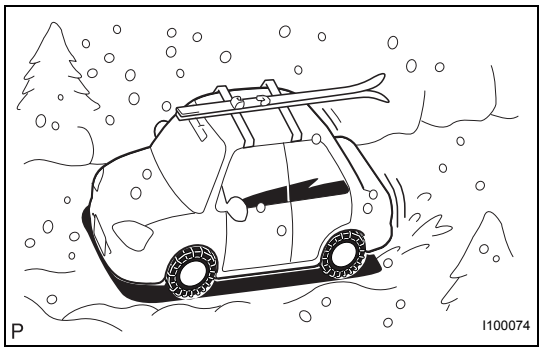

(9) When the vehicle runs on a snowy road or a mountain path with the chains installed or using a spare tire, the current vehicle position mark may deviate from the correct position.

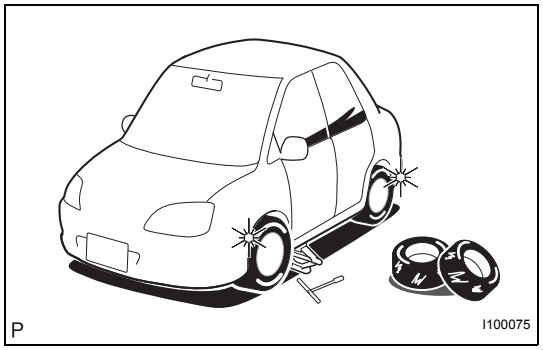

(10) When a tire is changed, the current vehicle position mark may deviate from the correct position.
HINT:
- Diameter of the tire may change, causing a speed sensor error.
- Performing the "tire change" in calibration mode will allow the system to correct the current vehicle position faster.

DISPLAY CHECK MODE

HINT:

- This mode checks the color display on the multi-display.
- Illustrations may differ from the actual vehicle depending on the device settings and options. Therefore, some detailed areas may not be shown exactly the same as on the actual vehicle.

1. **Enter diagnostic mode (See page NS-28).**
2. **Read the display check result.**

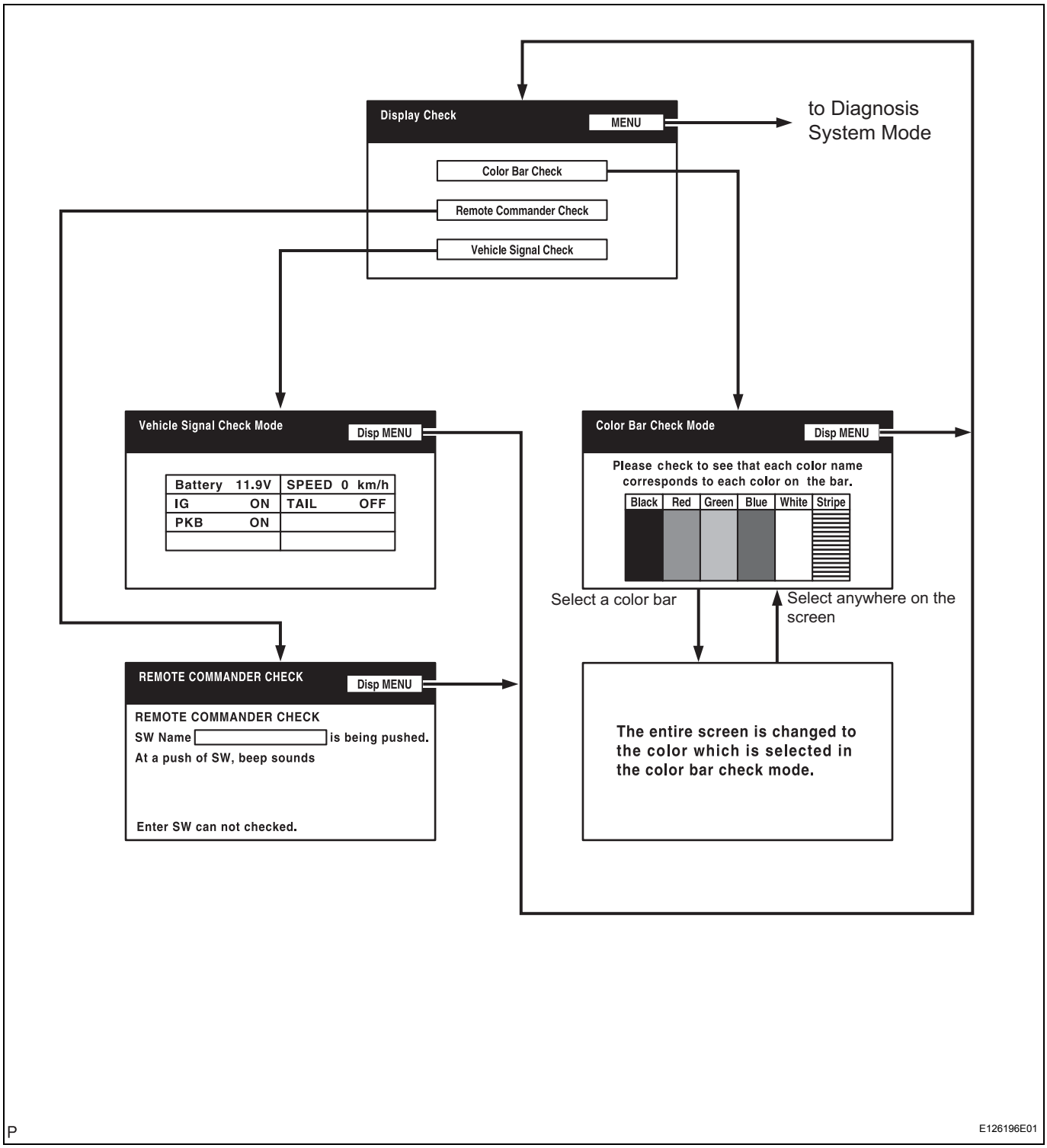

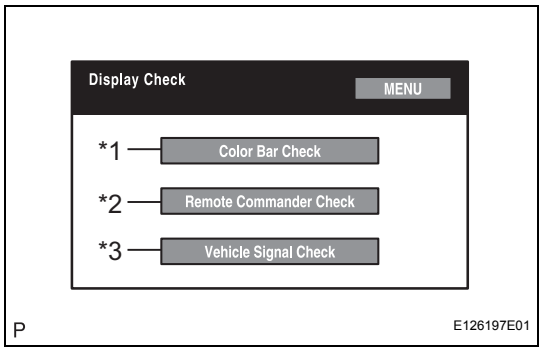

(a) Display Check Mode

Display	Contents
Color Bar Check/*1	Color display is checked.
Remote Commander Check/*2	Operating condition of switches on navigation controller is checked.
Vehicle Signal Check/*3	Status of the vehicle signal which has been loaded into the display is checked.

HINT:
In Display Check Mode, above checks can be performed.

Display Item	Meaning
MENU	Selecting this activates the "Diagnosis MENU".

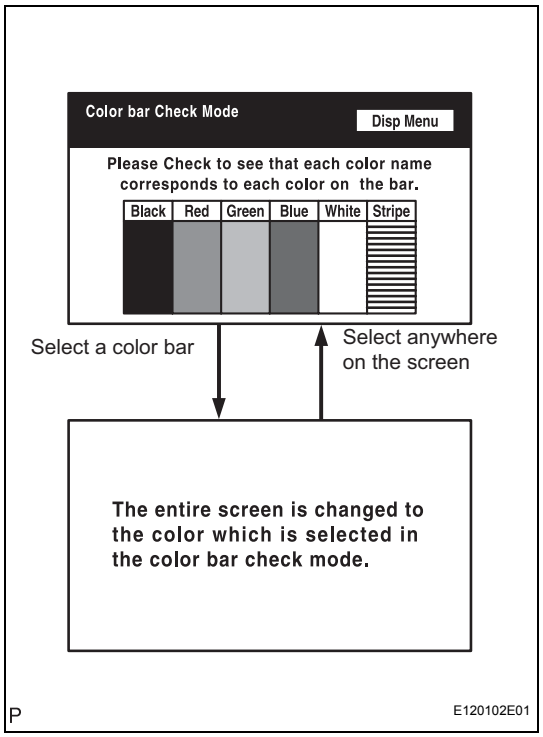

(b) Display Color Bar Check
(1) Start Diagnosis System.
(2) Select "MENU".
(3) Select "Display Check".
(4) Select "Color Bar Check".
(5) Make sure that each color name is corresponding to each color on the bar.
HINT:
Select Black, Red, Green, Blue, White and Stripe to display selected colors and stripe on the entire screen.
(6) Compare with the Color Bar Check in the Navigation Check and make sure that no difference is found.

Display Item	Meaning
Disp MENU	Selecting this activates the "Display Check".

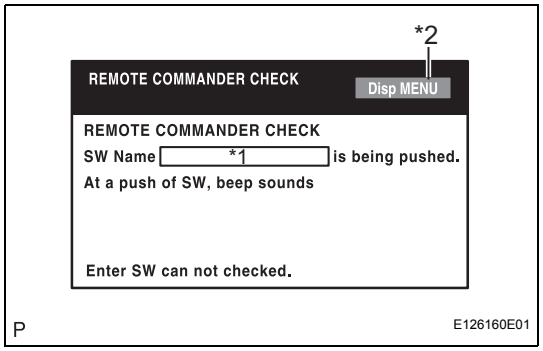

(c) Remote Commander Check
(1) Start the Diagnosis System.
(2) Select "MENU".
(3) Select "Display Check".
(4) Select "Remote Commander Check".
(5) Press each switch and make sure that it corresponds to the display on the screen.

Display Data	Description
Names of push-button switches/*1	• Names of push-button switches pressed are displayed. • "MULTIPLE" is displayed when 2 or more push-button switches are pressed. • After that if the number of push-button switches being pressed becomes 1, the name of the push-button switch being pressed is displayed.
Disp MENU/*2	Pressing this switch activates Display Check Menu.

NS

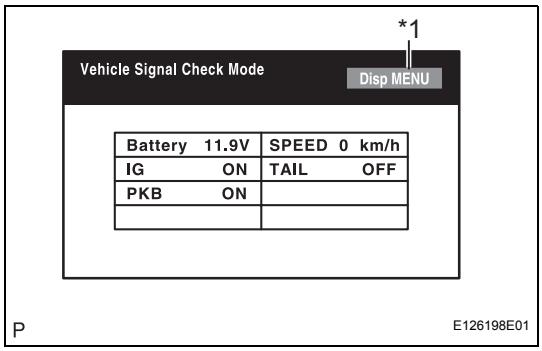

(d) Display Vehicle Signal Check
(1) Start the Diagnosis System.
(2) Select "MENU".
(3) Select "Display Check".
(4) Select "Vehicle Signal Check".
(5) Check the status of the vehicle signal loaded into the display.
HINT:
Vehicle signal data is updated every second.

Display Item	Meaning
Battery	Battery voltage is displayed by V.
IG	IG (Signal State) is displayed by ON/ OFF.
PKB	IG (Signal State) is displayed by ON/ OFF. (Ignition switch is on (IG))
SPEED	SPD is displayed by calculating the vehicle speed from the pulse signal.
TAIL	TAIL (Signal State) is displayed by ON/ OFF.
Disp MENU/*1	Selecting this activates Display Check Menu.

NAVIGATION CHECK MODE

HINT:

- This mode displays product information on the navigation systems and discs.
- Illustrations may differ from the actual vehicle depending on the device settings and options. Therefore, some detailed areas may not be shown exactly the same as on the actual vehicle.

1. **Enter diagnostic mode (See page NS-28).**

2. Read the navigation check result.

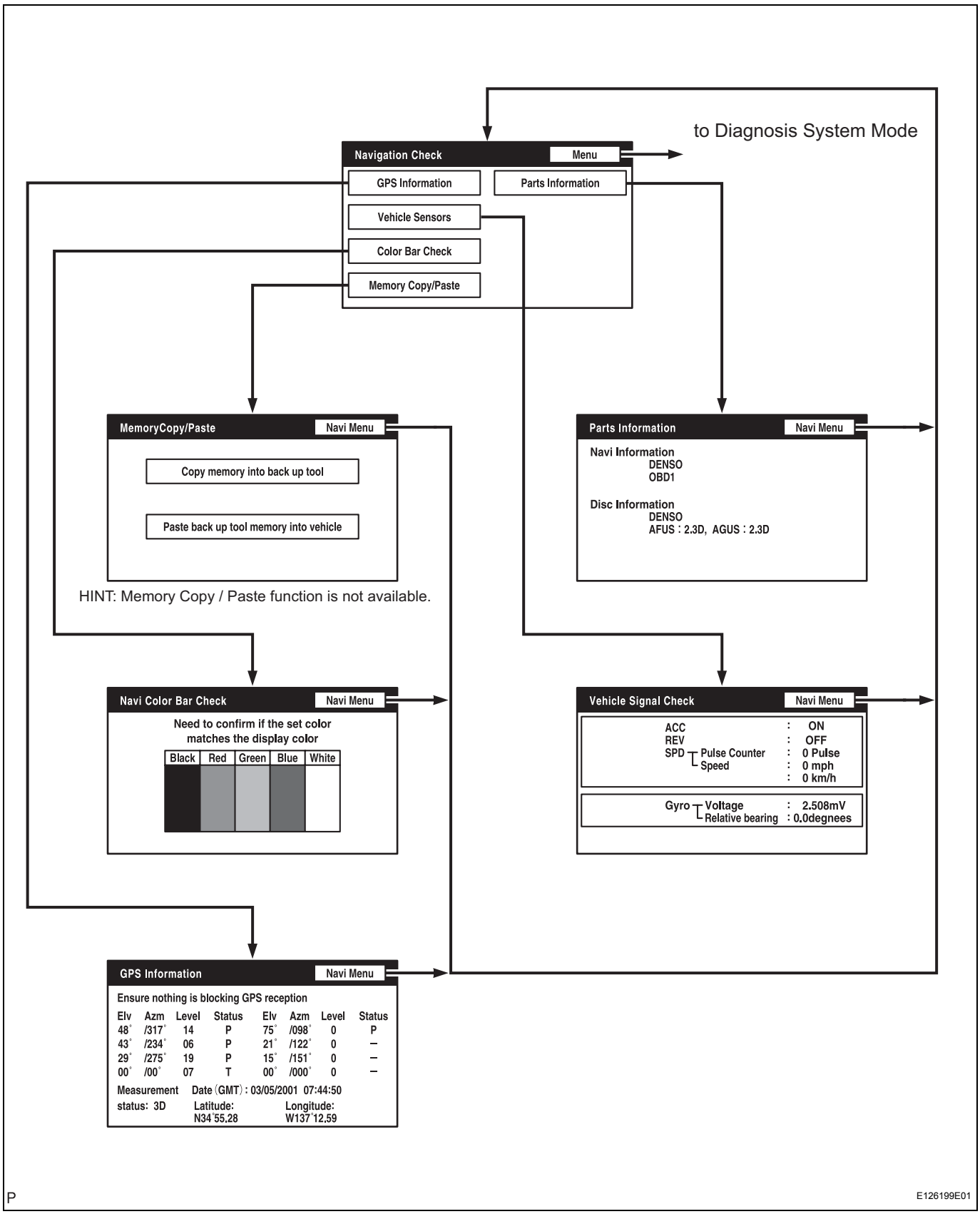

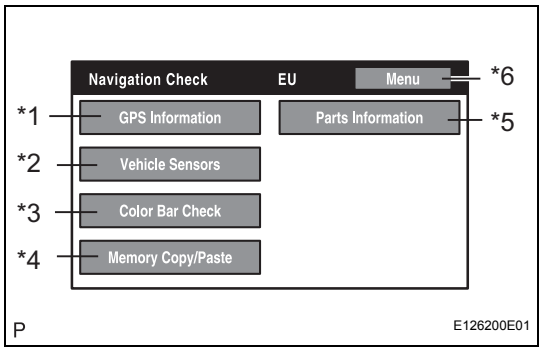

(a) Navigation Check Mode

Display	Description
GPS Information/*1	Information related to GPS is displayed (updated every second).
Vehicle Sensors/*2	Vehicle signal information to be loaded in the Navigation ECU is displayed (updated every second).
Color Bar Check/*3	Color display of the Navigation ECU is checked. (Compare with the Color Bar Check results in the Display Check.)
Memory Copy / Paste/*4	This function is not available.
Parts Information/*5	Navigation program version and disc version are displayed.

HINT:

- In the Navigation Check mode, the checks mentioned above can be conducted.
- The Navigation ECU operates each Navigation Check screen.

Display Item	Meaning
MENU/*6	Selecting this activates the "Diagnosis MENU".

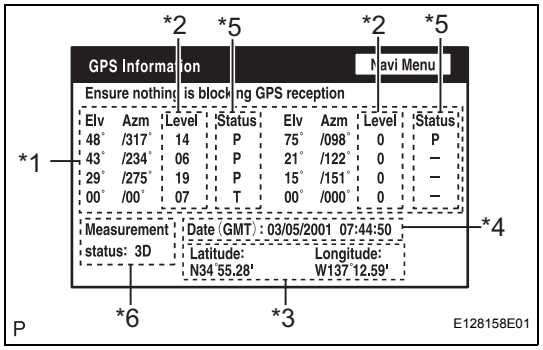

(b) GPS Information

(1) Start Diagnosis System.
(2) Select "MENU".
(3) Select "Navigation Check".
(4) Select "GPS Information".
(5) Check the GPS-related information.

Display Data	Description
Satellite Information/*1	"Angle of elevation", "Azimuth", "Level of Signal" and "Status of Wave Reception" of the Satellite captured by the antenna are displayed (for 8 satellites max.).
Level of Signal/*2	As the level of signal gets higher, the receiving sensitivity becomes better.
Position Data/*3	The latitude and longitude of the current position are displayed in degree, minute and second.
Time Data/*4	Date and time data obtained from the GPS receiver is displayed.

Status of Wave Reception: /*5

Display	Conditions
-	Unable to receive GPS
T	Receiving but not using GPS
P	Using GPS

Measurement Status: /*6

Display	Conditions
2D	Measurement on 2 dimensions
3D	Measurement on 3 dimensions
NG	GPS information cannot be used.
Error	Reception error occurs.
-	Other than the above

NS

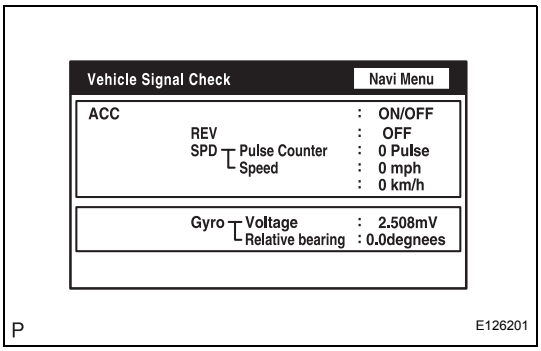

(c) Vehicle Sensors
(1) Start Diagnosis System.
(2) Select "MENU".
(3) Select "Navigation Check".
(4) Select "Vehicle Sensors".
(5) Check the vehicle signals (ACC, REV, SPD) and the output signal of the gyro sensor introduced into the navigation ECU.

Items	Display Method
ACC signal status	Displayed as ON/OFF
REV signal status	Displayed as ON/OFF
SPD signal status	The cumulative value of input pulse count and the vehicle speed [km/h] [mph] are displayed. [The cumulative value of input pulse count is set to 0 when this screen is displayed. When the vehicle starts to drive, it is counted and displayed continually.]
Output signal of the gyro sensor	Voltage [V] and relative azimuthal angle [degree] are displayed. [The position of the vehicle when this screen is displayed is set to 0 degree in azimuth. Based on this, relative azimuthal angle is measured and displayed continually.]
Navi Menu	Selecting this activates the "Navigation Check".

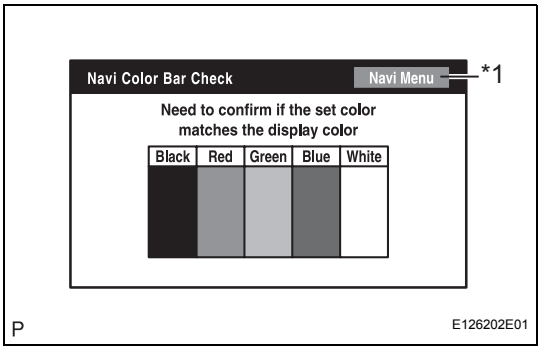

(d) Navigation Color Bar Check
(1) Start Diagnosis System.
(2) Select "MENU".
(3) Select "Navigation Check".
(4) Select "Color Bar Check".
(5) Make sure that the set color matches the display color.
(6) Compare with the Color Bar Check in the Display Check and make sure that no difference is found.

Display Item	Meaning
Navi Menu/*1	Selecting this activates the "Navigation Check".

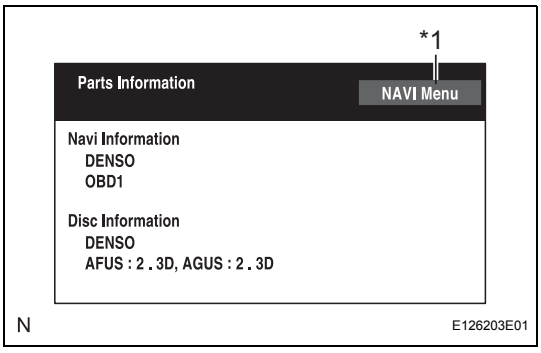

(e) Parts Information
(1) Start Diagnosis System.
(2) Select "MENU".
(3) Select "Navigation Check".
(4) Select "Parts Information".
(5) Check the program and disc version.

Display Item	Meaning
Navi Menu/*1	Selecting this activates the "Navigation Check".

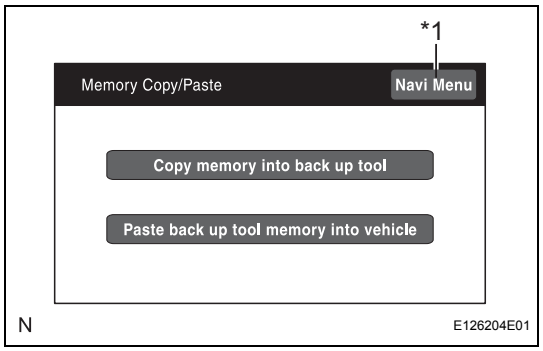

(f) Memory Copy/Paste
HINT:
This function is not available.

Display Item	Meaning
Navi Menu/*1	Selecting this activates the "Navigation Check".

PROBLEM SYMPTOMS TABLE

HINT:

- Before performing verification listed in the table below, check the fuse and relay.
- Methods used to verify the cause of the problem are listed in order of probability in the verification column.

Display function:

Symptom	Suspected area	See page
Black screen (No image appears on navigation / audio screen).	1. "No Image Appears on Multi-display"	NS-82
	2. Illumination circuit	NS-106
	3. Multi-display power source circuit	NS-161
	4. Replace multi-display	AV-162
Illumination for navigation controller does not come on with TAIL switch on.	1. Illumination circuit	NS-106
	2. Replace navigation controller	NS-175
Display does not dim (Night Screen) with TAIL switch on.	1. "Display does not Dim when Light Control Switch is Turned ON"	NS-83
	2. Illumination circuit	NS-106
	3. Replace multi-display	AV-162
Power does not turn off (Screen remains on).	1. Multi-display power source circuit	NS-161
	2. Navigation controller power source circuit	NS-159
	3. Switch Signal Circuit between Multi-display and Navigation Controller	NS-130
	4. Replace multi-display	AV-162
	5. Replace navigation controller	NS-175
Navigation controller does not function.	1. "Panel Switches do not Function"	NS-84
	2. Multi-display power source circuit	NS-161
	3. Navigation controller power source circuit	NS-159
	4. Switch Signal Circuit between Multi-display and Navigation Controller	NS-130
	5. Steering pad switch circuit	NS-102
	6. Replace navigation controller	NS-175
	7. Replace multi-display	AV-162
Only navigation screen is not displayed.	1. Display Signal Circuit between Navigation ECU and Multi-display	NS-127
	2. Replace map disc	-
	3. Replace multi-display	AV-162
	4. Replace navigation ECU	NS-171
Screen flicker or color distortion	1. "Screen Flicker or Color Distortion"	NS-85
	2. Display Signal Circuit between Navigation ECU and Multi-display	NS-127
	3. Replace map disc	-
	4. Replace multi-display	AV-162
	5. Replace navigation ECU	NS-171
Navigation function switches can be operated while vehicle is running.	Vehicle Speed Signal Circuit between Multi-display and Combination Meter	NS-117

Navigation function:

Symptom	Suspected area	See page
Map disc cannot be inserted.	1. "MAP Disc cannot be Inserted"	NS-87
	2. Navigation ECU power source circuit	NS-164
	3. Replace navigation ECU	NS-171
Map disc cannot be ejected.	1. Navigation ECU power source circuit	NS-164
	2. Replace navigation ECU	NS-171

Symptom	Suspected area	See page
Vehicle position mark deviates greatly.	1. "Vehicle Position Mark Deviates Greatly"	NS-88
	2. Replace GPS antenna	NS-178
	3. Replace navigation ECU	NS-171
Cursor or map rotates when vehicle is stopped.	1. "Cursor or MAP Rotates when Vehicle is Stopped"	NS-90
	2. Replace navigation ECU	NS-171
Vehicle position mark is not updated.	1. "Vehicle Position Mark is not Updated"	NS-91
	2. Replace map disc	-
	3. Replace navigation ECU	NS-171
Current position display does not appear.	1. "Current Position Display does not Appear"	NS-92
	2. Replace map disc	-
	3. Replace navigation ECU	NS-171
GPS mark is not displayed.	1. "GPS Mark is not Displayed"	NS-93
	2. Replace GPS antenna	NS-178
	3. Replace navigation ECU	NS-171
Voice guidance does not function.	1. "Voice Guidance does not Function"	NS-96
	2. Navigation Voice Speaker Circuit	NS-124
	3. Replace map disc	-
	4. Replace navigation ECU	NS-171
Map display incomplete	1. "MAP Display Incomplete"	NS-98
	2. Replace map disc	-
	3. Replace navigation ECU	NS-171
Route cannot be calculated.	1. "Route cannot be Calculated"	NS-99
	2. Replace map disc	-
	3. Replace navigation ECU	NS-171
Voice recognition difficulty	1. "Voice Recognition Difficulty"	NS-100
	2. Replace navigation ECU	NS-171
Voice is not recognized.	1. "Voice is not Recognized"	NS-101
	2. Microphone Circuit between Overhead J/B and Navigation ECU	NS-132
	3. Steering pad switch circuit	NS-102
	4. Replace microphone	AV-219
	5. Replace microphone amplifier	AV-222
	6. Replace navigation ECU	NS-171
	7. Replace radio receiver	AV-159
Speed signal does not change in the navigation check mode.	"Vehicle Speed Signal Circuit between Navigation ECU and Combination meter"	NS-113
Reverse signal does not change in the navigation check mode.	"Reverse Signal Circuit"	NS-121

Steering pad switch function:

Symptom	Suspected area	See page
Voice navigation cannot be operated with steering pad switch.	1. Steering pad switch circuit	NS-102
	2. Replace radio receiver	AV-159
	3. Replace navigation ECU	NS-171

NS

TERMINALS OF ECU

1. MULTI-DISPLAY:

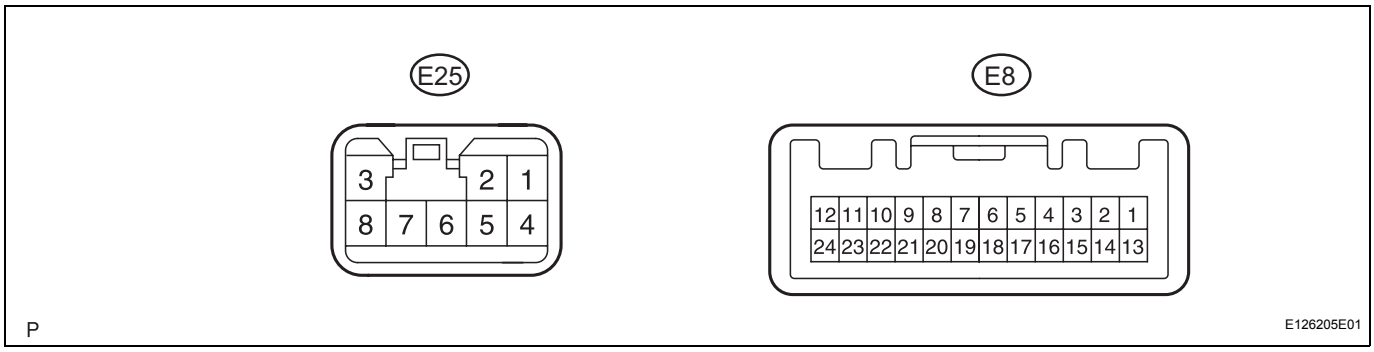

Symbols (Terminal No.)	Wiring Color	Terminal Description	Condition	Specified Condition
GND4 (E8-1) - Body ground	W-B - Body ground	Ground	Always	Below 1 V
PKB (E8-2) - GND1 (E25-6)	R - W-B	Parking Brake signal	Turn parking Brake switch ON → OFF	Below 1 V → 10 to 14 V
VR (E8-3) - GND1 (E25-6)	Y - W-B	Video return signal	Turn ignition switch off	Below 1 V
R (E8-4) - GND1 (E25-6)	G - W-B	Display signal (red)	Navigation display is on	-
B (E8-5) - GND1 (E25-6)	R - W-B	Display signal (blue)	Navigation display is on	-
TX+ (E8-6) - GND1 (E25-6)	Y - W-B	AVC-LAN communication signal	Turn ignition switch on (ACC)	2 to 3 V
TX1+ (E8-7) - GND1 (E25-6)	V - W-B	AVC-LAN communication signal	Turn ignition switch on (ACC)	2 to 3 V
RE1 (E8-8) - GND1 (E25-6)	B - W-B	Navigation controller communication signal	Navigation controller switch is ON	-
TX2+ (E8-9) - GND1 (E25-6)	BR - W-B	AVC-LAN communication signal	Turn ignition switch on (ACC)	2 to 3 V
TX4+ (E8-10) - GND1 (E25-6)	GR - W-B	AVC-LAN communication signal	Turn ignition switch on (ACC)	2 to 3 V
GND2 (E8-11) - Body ground	W-B - Body ground	Ground	Always	Below 1 V
SGD1 (E8-12) - Body ground	W-B - Body ground	Ground	Always	Below 1 V
SGND (E8-13) - Body ground	W-B - Body ground	Ground	Always	Below 1 V
TC (E8-14) - GND1 (E25-6)	Y - W-B	Diagnosis ON signal	Turn ignition switch on (IG)	9 to 14 V
VG (E8-15) - Body ground	W-B - Body ground	Shielded ground	Always	Below 1 V
G (E8-16) - GND1 (E25-6)	W - W-B	Display signal (green)	Navigation display is on	-
SYNC (E8-17) - GND1 (E25-6)	B - W-B	Display signal (synchronize)	Navigation display is on	-
TX- (E8-18) - GND1 (E25-6)	B - W-B	AVC-LAN communication signal	Turn ignition switch on (ACC)	2 to 3 V
TX1- (E8-19) - GND1 (E25-6)	LG - W-B	AVC-LAN communication signal	Turn ignition switch on (ACC)	2 to 3 V
SG (E8-20) - Body ground	Shielded - Body ground	Shielded ground	Always	Below 1 V
TX2- (E8-21) - GND1 (E25-6)	R - W-B	AVC-LAN communication signal	Turn ignition switch on (ACC)	2 to 3 V
TX4- (E8-22) - GND1 (E25-6)	B - W-B	AVC-LAN communication signal	Turn ignition switch on (ACC)	2 to 3 V
GND3 (E8-23) - Body ground	W-B - Body ground	Ground	Always	Below 1 V
SGD2 (E8-24) - Body ground	W-B - Body ground	Ground	Always	Below 1 V
+B1 (E25-1) - GND1 (E25-6)	R - W-B	Battery	Always	10 to 14 V
IG (E25-2) - GND1 (E25-6)	B - W-B	Ignition (ON)	Turn ignition switch off → on (IG)	Below 1 V → 10 to 14 V

NS

Symbols (Terminal No.)	Wiring Color	Terminal Description	Condition	Specified Condition
ACC (E25-4) - GND1 (E25-6)	GR - W-B	Accessory (ON)	Turn ignition switch off → on (ACC or IG)	Below 1 V → 10 to 14 V
SPD (E25-5) - GND1 (E25-6)	L - W-B	Speed signal from combination meter	See "Display Check Mode" (See page NS-17)	-
GND1 (E25-6) - Body ground	W-B - Body ground	Ground	Always	Below 1 V
GND5 (E25-7) - Body ground	W-B - Body ground	Ground	Always	Below 1 V
ILL+ (E25-8) - GND1 (E25-6)	G - W-B	Illumination signal	Light control switch OFF → TAIL or ON	Below 1 V → 10 to 14 V

2. NAVIGATION ECU:

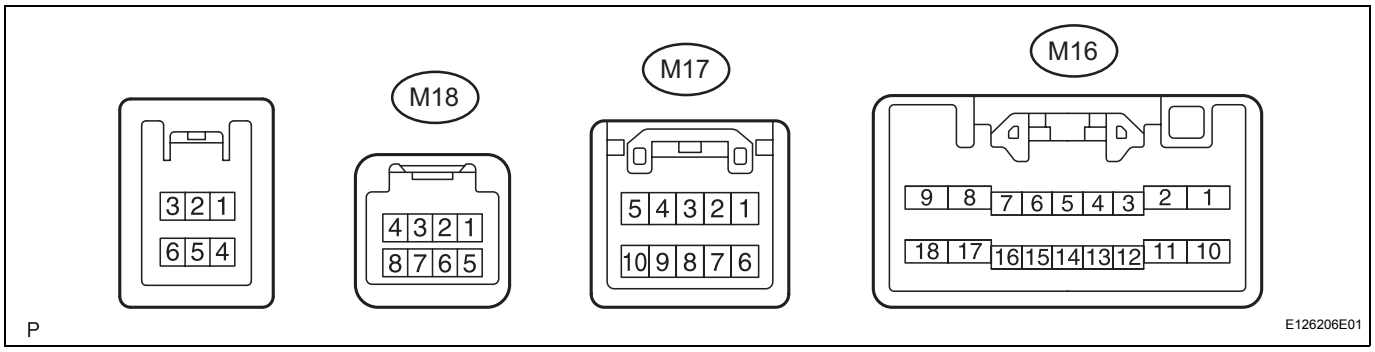

Symbols (Terminal No.)	Wiring Color	Terminal Description	Condition	Specified Condition
AUI+ (M16-1) - GND1 (M16-17)	GR - W-B	Sound signal (input)	Audio system is playing	-
AUO+ (M16-2) - GND1 (M16-17)	P - W-B	Sound signal (output)	Audio system is playing	-
SPD (M16-5) - GND1 (M16-17)	BR - W-B	Speed signal from combination meter	See "Navigation Check Mode" (See page NS-20)	-
+B (M16-9) - GND1 (M16-17)	R - W-B	Battery	Always	10 to 14 V
AUI- (M16-10) - GND1 (M16-17)	Y - W-B	Sound signal (input)	Audio system is playing	-
AUO- (M16-11) - GND1 (M16-17)	V - W-B	Sound signal (output)	Audio system is playing	-
REV (M16-14) - GND1 (M16-17)	B - W-B	Reverse signal from combination meter	See "Navigation Check Mode" (See page NS-20)	-
GND1 (M16-17) - Body ground	W-B - Body ground	Ground	Always	Below 1 V
ACC (M16-18) - GND1 (M16-17)	L - W-B	Accessory (ON)	Turn ignition switch off → on (ACC or IG)	Below 1 V → 10 to 14 V
VR (M17-1) - GND1 (M16-17)	Y - W-B	Video return signal	Turn ignition switch off	Below 1 V
R (M17-2) - GND1 (M16-17)	G - W-B	Display signal (red)	Navigation display is on	-
B (M17-3) - GND1 (M16-17)	R - W-B	Display signal (blue)	Navigation display is on	-
TX1+ (M17-5) - GND1 (M16-17)	GR - W-B	AVC-LAN communication signal	Turn ignition switch on (ACC)	2 to 3 V
VG (M17-6) - Body ground	Shielded - Body ground	Shielded ground	Always	Below 1 V
G (M17-7) - GND1 (M16-17)	W - W-B	Display signal (green)	Navigation display is on	-
SYNC (M17-8) - GND1 (M16-17)	B - W-B	Display signal (synchronize)	Navigation display is on	-
TX1- (M17-10) - GND1 (M16-17)	LG - W-B	AVC-LAN communication signal	Turn ignition switch on (ACC)	2 to 3 V
MIC+ (M18-3) - GND1 (M16-17)	R - W-B	Microphone voice signal	Steering pad switch RH (VOICE) is pushed	-
MACC (M18-4) - GND1 (M16-3)	W - W-B	Microphone AMP power supply	Turn ignition switch off → on (IG)	Below 1 V → 5 V
MIC- (M18-5) - GND1 (M16-17)	G - W-B	Microphone voice signal	Always	Below 1 V
SGND (M18-6) - GND1 (M16-17)	G - W-B	Microphone voice signal	Always	Below 1 V
SNSE (M18-7) - Body ground	W-B - Body ground	Microphone connection detection signal	Always	Below 1 V

3. CLOCK ASSEMBLY:

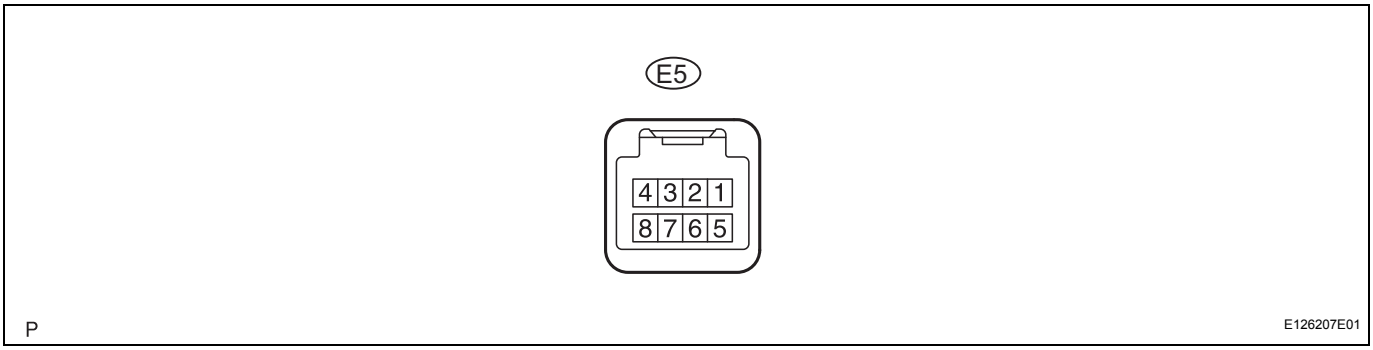

Symbols (Terminal No.)	Wiring Color	Terminal Description	Condition	Specified Condition
TX-1 (E5-5) - E (E5-7)	LG - W-B	AVC-LAN communication signal	Turn ignition switch on (ACC)	2 to 3 V
TX+1 (E5-6) - E (E5-7)	V - W-B	AVC-LAN communication signal	Turn ignition switch on (ACC)	2 to 3 V
E (E5-7) - Body ground	W-B - Body ground	Ground	Always	Below 1 V
B (E5-8) - E (E5-7)	W - W-B	Battery	Always	10 to 14 V
ACC (E5-4) - E (E5-7)	B - W-B	Accessory (ON)	Turn ignition switch off → on (ACC or IG)	Below 1 V → 10 to 14 V

NS

4. NAVIGATION CONTROLLER ASSEMBLY:

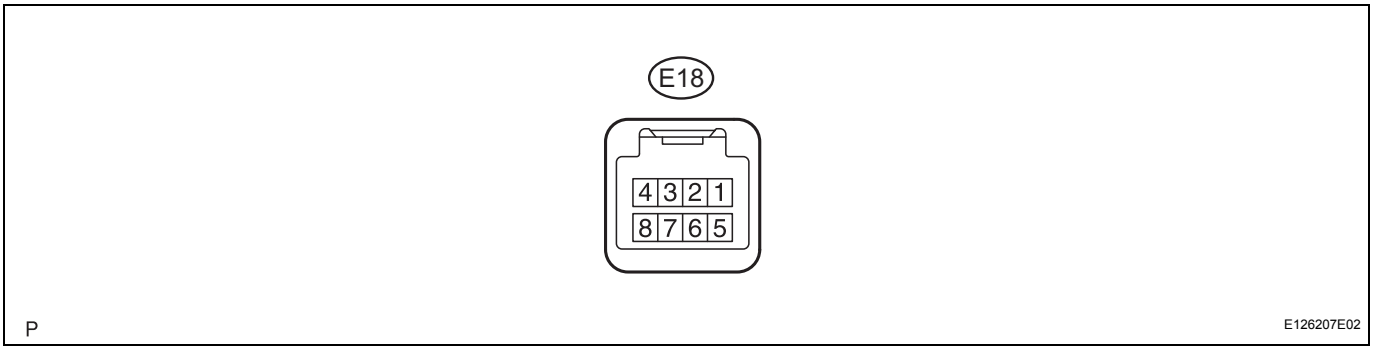

Symbols (Terminal No.)	Wiring Color	Terminal Description	Condition	Specified Condition
+B (E18-1) - GND (E18-8)	Y - W-B	Battery	Always	10 to 14 V
RE (E18-2) - GND (E18-8)	B - W-B	Navigation controller communication signal	Navigation controller switch is pushed	-
ACC (E18-4) - GND (E18-8)	GR - W-B	Accessory (ON)	Turn ignition switch off → on (ACC or IG)	Below 1 V → 10 to 14 V
SGND (E18-6) - Body ground	Shielded - Body ground	Shielded ground	Always	Below 1 V
GND (E18-8) - Body ground	W-B - Body ground	Ground	Always	Below 1 V

5. RADIO RECEIVER (See page AV-13)

6. STEREO COMPONENT AMPLIFIER (See page AV-13)

7. GATEWAY ECU (See page AV-13)

DTC CHECK / CLEAR

HINT:

- Illustrations may differ from the actual vehicle depending on the device settings and options. Therefore, some detailed areas may not be shown exactly the same as on the actual vehicle.
- After the ignition switch is turned on (IG), check that the map is displayed before starting the diagnostic mode. Otherwise, some items cannot be checked.

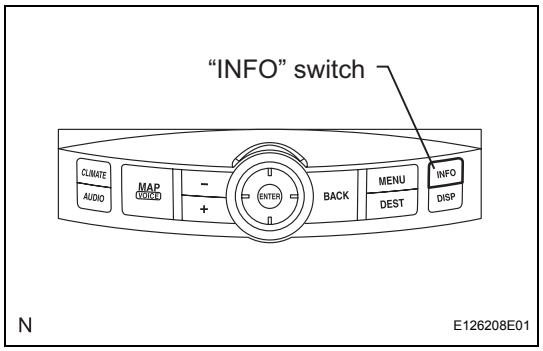

1. Starting diagnostic mode

(a) Start the engine.

(b) While pressing and holding the "INFO" switch, operate the light control switch: OFF → ON → OFF → ON → OFF → ON → OFF.

(c) The diagnostic mode starts and the "Service Check Mode" screen will be displayed. Service inspection starts automatically and the result will be displayed.

2. Diagnosis system mode

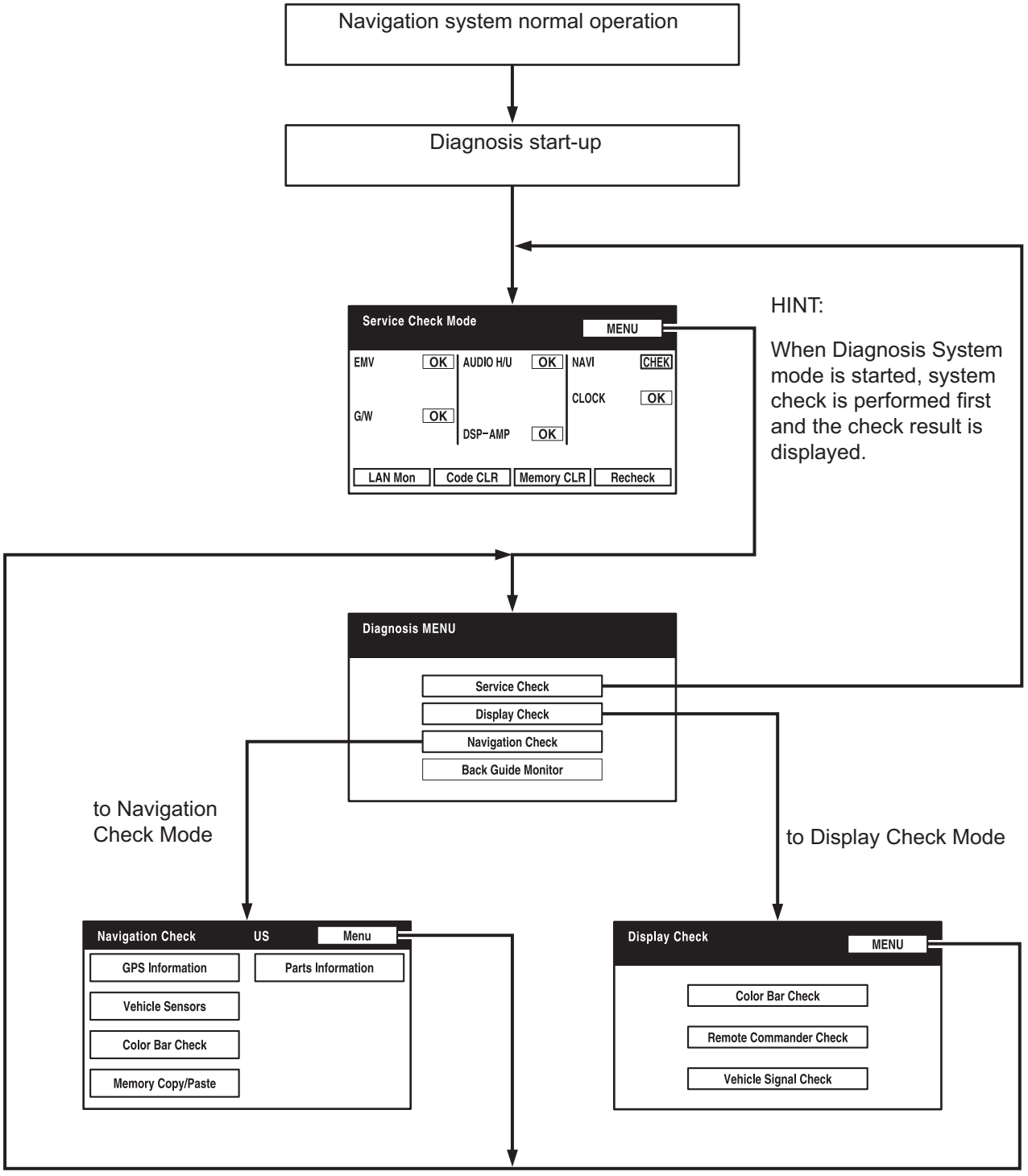

P

E126209E01

NS

3. Read the system check result.

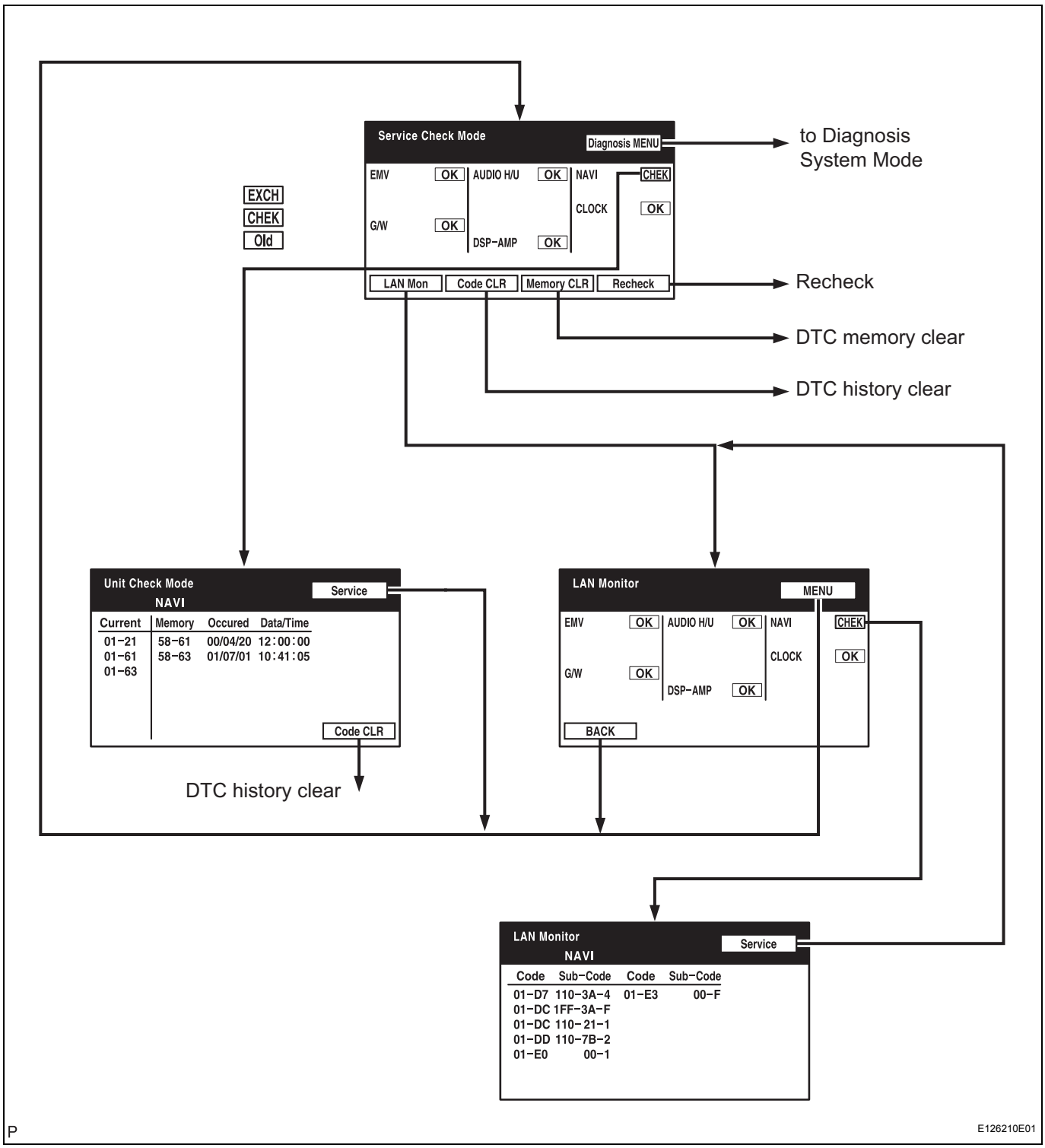

NS

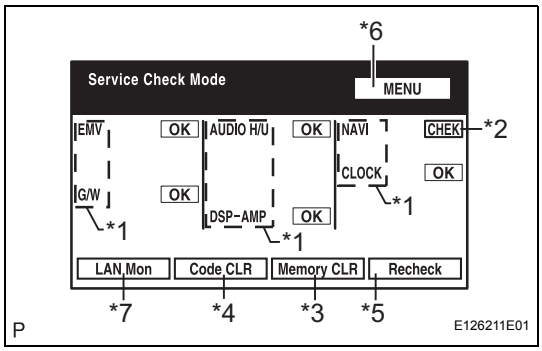

(a) Service Check Mode

(b) System Check

(1) Start the diagnosis system.

Display Item	Function
Component/*1	List of components including optional components (15 components max.) is displayed. When the names are not identified, their physical addresses are displayed.
Check/*2	Check results are displayed.
Memory CLR/*3	Selecting this for 3 sec. deletes all the information about master component registration.
Code CLR/*4	Selecting this for 3 sec. deletes diagnosis memory of all the components. It deletes Service Check results and the screen displaying the check results.
Recheck/*5	Selecting this performs System Check again.
MENU/*6	Selecting this activates the Diagnosis Menu screen.
LAN Mon/*7	Selecting this activates the LAN monitor screen.

Abbreviated component names are shown on the display. Details of each abbreviation are as follows:

Display	Name
EMV	Multi-display
NAVI	Navigation ECU
G/W	Gateway ECU
AUDIO H/U	Radio receiver
DSP-AMP	Stereo component amplifier
CLOCK	Clock assembly
-	-

HINT:
Service check displays the check results based on the information obtained from each component's response to "System Check Execution" and "Diagnosis Memory Request", and the information of "Current DTC Notification" (the Unit Check Mode and the LAN Monitor information that will be displayed on the next screens).

(2) Read Check Result.

Check Result	Meaning
OK	No DTC is identified.
EXCH	One or more DTCs requesting for exchange are detected.
CHEK	One or more DTCs requesting for check are detected.
NCON	No connection response to Diagnosis System start-up, whereas it has the connection response to the AVC-LAN system when the ignition switch is turned on (when IG is turned to ACC).
Old	One or more DTCs are detected because of old version.
NRES	No response to the information about the Diagnosis System, whereas it responds to the Diagnosis System start-up.

NS

Check Result	Meaning
No Err	No DTC is identified.

HINT:
- After repair and check, select "Code CLR" for more than 3 sec. to delete diagnosis memory.
- After deleting diagnosis memory, select "Recheck" and make sure "OK" is displayed on the screen.

(3) "EXCH", "CHEK" and "Old" can be used as switches to activate "Unit Check Mode" for detailed information. Check troubled parts of the components in these modes by referring to the DTC code list.

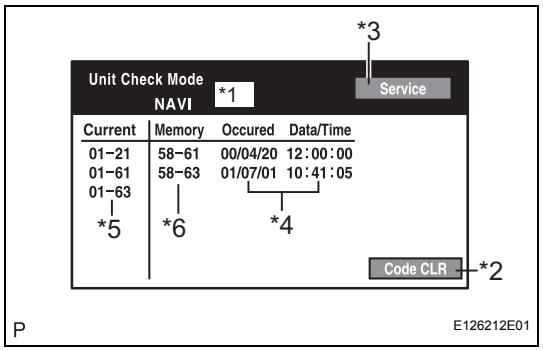

Display Item	Description
Component/*1	Component to be checked is displayed.
Code CLR/*2	Selecting this for 3 sec. deletes DTC memory of the selected diagnosis component.
Service/*3	Selecting this returns to the System Check Mode screen.
Data/Time/*4	The date and time stamped at the time of DTC occurrence are displayed in the order of year - month - day - hour - minute - second. (If the date and time data is invalid, it is displayed as a blank.)
Current/*5	Up to 6 DTC codes detected during the System Check are displayed.
Memory/*6	DTC memories stored and current DTC Notification are displayed.

HINT:
- Detecting Unit DTC activates the Unit Check Mode on the screen.
- In the Unit Check Mode, DTC identified as "EXCH" in the Service Check is displayed as classified into Current DTC and Past DTC.

(c) LAN Monitor
(1) Start the Diagnosis System.

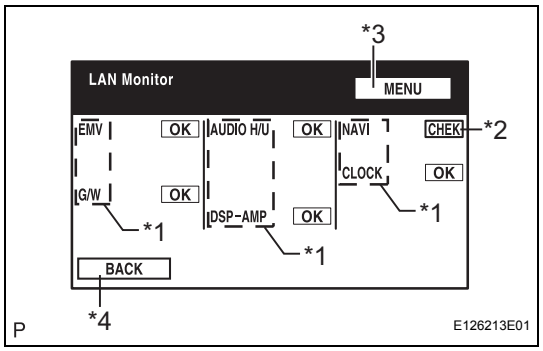

Display Item	Function
Component/*1	List of components including optional components (15 components max.) is displayed. When the names are not identified, their physical addresses are displayed.
CHEK/*2	Check results are displayed.
MENU/*3	Selecting this activates the service check mode screen.
BACK/*4	Selecting this activates the service check mode screen.

NS

HINT:
System check displays the check results based on the information obtained from each component's response to "System Check Execution" and "Diagnosis Memory Request", and the information of "Current DTC Notification" (the LAN Monitor that will be displayed on the next screens).

(2) Read Check Result

Check Result	Meaning
OK	No DTC is identified.
EXCH	One or more DTCs requesting for exchange are detected.
CHEK	One or more DTCs requesting for check are detected.
NCON	No connection response to Diagnosis System start-up, whereas it has the connection response to the AVC-LAN system when the ignition switch is turned on (when IG is turned to ACC).
Old	One or more DTCs are detected because of old version.
NRES	No response to the information about the Diagnosis System, whereas it responds to the Diagnosis System start-up.
No Err	No DTC is identified.

HINT:
- After repair and check, select "Code CLR" for more than 3 sec. to delete diagnosis memory.
- After deleting diagnosis memory, select "Recheck" and make sure "OK" is displayed on the screen.

(3) "CHEK" can be used as a switch to activate "LAN Monitor" for detailed information. Check troubled parts of the components in these modes by referring to the DTC code list.

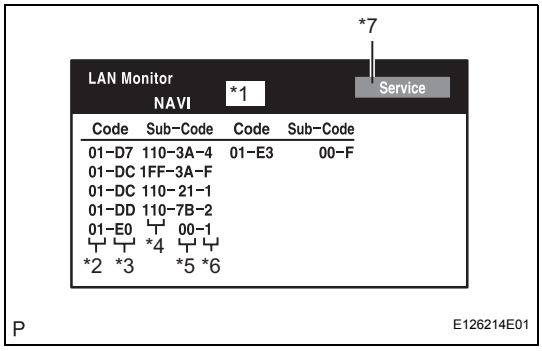

Display Item	Description
Component/*1	Component to be checked is displayed.
Segment/*2	Logical address codes corresponding to DTC are displayed.
DTC/*3	DTC is displayed.
Sub-code (address numbers of related components)/*4	Physical address codes memorized together with DTC are displayed.
Sub-code (Connection confirmation number)/*5	Connection confirmation numbers memorized together with DTC are displayed.
Sub-code (Number of occurrence)/*6	The number of occurrence of the same DTC is displayed.
Service/*7	Selecting this returns to the LAN monitor screen.

HINT:
Detecting no LAN DTC activates the LAN Check Mode on the screen.

4. Finish diagnostic mode.

(a) Turn the ignition switch off.

DIAGNOSTIC TROUBLE CODE CHART

COMMUNICATION DIAGNOSIS:

DTC No.	Detection Item	Trouble Area	See page
01-21	ROM Error	Multi-display	NS-39
01-22	RAM Error	Multi-display	NS-39
01-D5	Absence of Registration Unit	1. Power source circuit of the component shown by the sub-code 2. AVC-LAN circuit between the multi-display and the component shown by the sub-code 3. Component shown by the sub-code	NS-40
01-D6	No Master	1. Multi-display power source circuit 2. Power source circuit of the component which has stored this code 3. AVC-LAN circuit between the multi-display and the component which has stored this code 4. Component which has stored this code 5. Multi-display	NS-42
01-D7	Connection Check Error	1. Multi-display power source circuit 2. Power source circuit of the component which has stored this code 3. AVC-LAN circuit between the multi-display and the component which has stored this code 4. Component which has stored this code 5. Multi-display	NS-42
01-D8	No Response for Connection Check	1. Power source circuit of the component shown by the sub-code 2. AVC-LAN circuit between the multi-display and the component shown by the sub-code 3. Component shown by the sub-code	NS-40
01-D9	Last Mode Error	1. Power source circuit of the component shown by the sub-code 2. AVC-LAN circuit between the multi-display and the component shown by the sub-code 3. Component shown by the sub-code	NS-40
01-DA	No Response Against ON / OFF Command	1. Power source circuit of the component shown by the sub-code 2. AVC-LAN circuit between the multi-display and the component shown by the sub-code 3. Component shown by the sub-code	NS-40

DTC No.	Detection Item	Trouble Area	See page
01-DB	Mode Status Error	1. Power source circuit of the component shown by the sub-code 2. AVC-LAN circuit between the multi-display and the component shown by the sub-code 3. Component shown by the sub-code	NS-40
01-DC	Transmission Error	If the same sub-code is recorded in other components, check harness for power supply and communication system of all components shown by code	NS-47
01-DD	Master Reset	1. Multi-display power source circuit 2. AVC-LAN circuit between the multi-display and the component which has stored this code 3. Multi-display 4. Component which has stored this code	NS-50
01-DE	Slave Reset	1. Power source circuit of the component shown by the sub-code 2. AVC-LAN circuit between the multi-display and the component shown by the sub-code 3. Component shown by the sub-code	NS-40
01-DF	Master Error	1. Multi-display power source circuit 2. AVC-LAN circuit between the multi-display and the component which has stored this code 3. AVC-LAN circuit between the multi-display and the radio receiver 4. Multi-display 5. Component which has stored this code	NS-55
01-E0	Registration Complete Indication Error	-	NS-60
01-E1	Voice Processing Device ON Error	1. Multi-display power source circuit 2. AVC-LAN circuit between the multi-display and the component which has stored this code 3. Multi-display 4. Component which has stored this code	NS-50
01-E2	ON / OFF Indication Parameter Error	Multi-display	NS-61
01-E3	Registration Demand Transmission	-	NS-60
01-E4	Multiple Frame Incomplete	-	NS-60

FRONT MONITOR:

DTC No.	Detection Item	Trouble Area	See page
34-10	Error in Picture Circuit	Multi-display	NS-62
34-11	No Current in Back-light Error	Multi-display	NS-62
34-12	Excess Current in Back-light Error	Multi-display	NS-62

NAVI:

DTC No.	Detection Item	Trouble Area	See page
58-10	Gyro Error	1. Gyro sensor 2. Navigation ECU	NS-63
58-11	GPS Receiver Error	Navigation ECU	NS-65
58-40	GPS Antenna Error	1. Wire harness 2. GPS antenna 3. Navigation ECU	NS-66
58-41	GPS Antenna Power Source Error	1. Wire harness 2. GPS antenna 3. Navigation ECU	NS-66
58-42	Map Disc Read Error	1. Map Disc 2. Navigation ECU	NS-67
58-43	SPD Signal Error	1. Speed signal circuit 2. Navigation ECU	NS-69
58-44	Player Error	Navigation ECU	NS-70
58-45	High Temperature	Navigation ECU	NS-71

CD PLAYER:

DTC No.	Detection Item	Trouble Area	See page
62-10	CD Player Mechanical Error	Radio Receiver	NS-73
62-11	CD Insertion and Eject Error	Radio Receiver	NS-73
62-12	CD Reading Abnormal	Radio Receiver	NS-73
62-40	No Disc	Radio Receiver	NS-72
62-41	Wrong Disc	1. CD 2. Radio Receiver	NS-74
62-42	Disc cannot be Read	1. CD 2. Radio Receiver	NS-74
62-43	CD-ROM Abnormal	1. CD 2. Radio Receiver	NS-76
62-44	CD Abnormal	Radio Receiver	NS-77
62-45	Eject Error	Radio Receiver	NS-78
62-46	Scratched / Reversed Disc	1. CD 2. Radio Receiver	NS-79
62-47	High Temperature	Radio Receiver	NS-81
62-48	Excess Current	Radio Receiver	NS-77
62-50	Tray Insertion / Ejection Error	Radio Receiver	NS-77
62-51	Elevator Error	Radio Receiver	NS-78
62-52	Clamp Error	Radio Receiver	NS-78

IN-DASH CD CHANGER:

DTC No.	Detection Item	Trouble Area	See page
63-10	CD Changer Mechanical Error	Radio Receiver	NS-73
63-11	CD Insertion and Eject Error	Radio Receiver	NS-73
63-12	CD Reading Abnormal	Radio Receiver	NS-73
63-40	No Disc	Radio Receiver	NS-72
63-41	Wrong Disc	1. CD 2. Radio Receiver	NS-74
63-42	Disc cannot be Read	1. CD 2. Radio Receiver	NS-74
63-43	CD-ROM Abnormal	1. CD 2. Radio Receiver	NS-76
63-44	CD Abnormal	Radio Receiver	NS-77
63-45	Eject Error	Radio Receiver	NS-78
63-46	Scratched / Reversed Disc	1. CD 2. Radio Receiver	NS-79

DTC No.	Detection Item	Trouble Area	See page
63-47	High Temperature	Radio Receiver	NS-81
63-48	Excess Current	Radio Receiver	NS-77
63-50	Tray Insertion / Ejection Error	Radio Receiver	NS-77
63-51	Elevator Error	Radio Receiver	NS-78
63-52	Clamp Error	Radio Receiver	NS-78

GPS:

DTC No.	Detection Item	Trouble Area	See page
80-10	Gyro Error	1. Gyro sensor 2. Navigation ECU	NS-63
80-11	GPS Receiver Error	Navigation ECU	NS-65
80-40	GPS Antenna Error	1. Wire harness 2. GPS antenna 3. Navigation ECU	NS-66
80-41	GPS Antenna Power Source Error	1. Wire harness 2. GPS antenna 3. Navigation ECU	NS-66
80-42	Map Disc Read Error	1. Map disc 2. Navigation ECU	NS-67
80-43	SPD Signal Error	1. Speed signal circuit 2. Navigation ECU	NS-69
80-44	Player Error	Navigation ECU	NS-70
80-45	High Temperature	Navigation ECU	NS-71

DTC	01-21	ROM Error

DTC	01-22	RAM Error

DESCRIPTION

DTC No.	DTC Detection Condition	Trouble Area
01-21	A malfunction exists in ROM.	Multi-display
01-22	A malfunction exists in RAM.	

INSPECTION PROCEDURE

HINT:
After the inspection is completed, clear the DTCs.

1	REPLACE MULTI-DISPLAY

NEXT

END

DTC	01-D5	Absence of Registration Unit

DTC	01-D8	No Response for Connection Check

DTC	01-D9	Last Mode Error

DTC	01-DA	No Response Against ON / OFF Command

DTC	01-DB	Mode Status Error

DTC	01-DE	Slave Reset

DESCRIPTION

DTC No.	DTC Detection Condition	Trouble Area
01-D5 *1, *3	• A component shown by the sub-code is (was) disconnected from the system when turning the ignition switch on (IG or ACC). • The communication condition with the device that the code shows cannot be obtained when the engine starts.	• Power source circuit of the component shown by the sub-code • AVC-LAN circuit between the multi-display and the component shown by the sub-code • Component shown by the sub-code
01-D8 *2, *3	A component shown by the sub-code is (was) disconnected from the system after engine start.	
01-D9 *1, *3	The device that had functioned before the engine stopped is (was) disconnected from the system when the ignition switch is (was) on (IG or ACC).	
01-DA *3	• No response is identified when changing mode. • Sound and image do not change by switch operation.	
01-DB *1, *3	A dual alarm is detected.	
01-DE *3, *4	A slave device has been disconnected after engine start.	

HINT:

- *1: Even if no fault is present, this trouble code may be stored depending on the battery condition or engine start voltage.
- *2: If the power connector is disconnected after the engine starts, this code is stored after 180 seconds.
- *3: If it is reported that the device does not exist during verification, check the power source circuit and AVC-LAN circuit for the device.
- *4: This code may be stored if the engine is started and the ignition switch is turned to the START position again. (Key type ignition switch only)

NOTICE:

- **Before starting troubleshooting, be sure to clear DTCs to erase codes stored due to the reasons described in the HINT above. Then, check for DTCs and troubleshoot according to the output DTCs.**
- **The multi-display is the master unit.**
- **Be sure to clear and recheck DTCs after the inspection is completed to confirm that no DTCs are output.**

INSPECTION PROCEDURE

NOTICE:

Be sure to read DESCRIPTION before performing the following procedures.

1	CHECK "MULTI-DISPLAY COMMUNICATION ERROR" IN FLOW CHART

Refer to the multi-display communication error (See page NS-147).

NEXT

END

DTC	01-D6	No Master

DTC	01-D7	Connection Check Error

DESCRIPTION

DTC No.	DTC Detection Condition	Trouble Area
01-D6 *1	When either of the following conditions is met: • The component which has stored the code has (had) been disconnected when the ignition switch is on (ACC or IG). • The master device has (had) been disconnected when this code is stored.	• Multi-display power source circuit • Power source circuit of the component which has stored this code • AVC-LAN circuit between the multi-display and the component which has stored this code • Component which has stored this code • Multi-display
01-D7 *2	When either of the following conditions is met: • The component which has stored the code has (had) been disconnected after the engine starts (started). • The master device has (had) been disconnected when this code is (was) stored.	

HINT:

- *1: Even if no fault is present, this trouble code may be stored depending on the battery condition or engine start voltage.
- *2: When 210 seconds have elapsed after disconnecting the power supply connector of the master component with the ignition switch on (ACC or IG), this code is stored.

NOTICE:

- **Before starting troubleshooting, be sure to clear DTCs to erase codes stored due to the reasons described in the HINT above. Then, check for DTCs and troubleshoot according to the output DTCs.**
- **The multi-display is the master unit.**
- **Be sure to clear and recheck DTCs after the inspection is completed to confirm that no DTCs are output.**

INSPECTION PROCEDURE

NOTICE:

Be sure to read DESCRIPTION before performing the following procedures.

1	CHECK MULTI-DISPLAY POWER SOURCE CIRCUIT

Refer to the multi-display power source circuit (See page NS-161).

If the power source circuit is operating normally, proceed to the next step.

NEXT

2 IDENTIFY THE COMPONENT WHICH HAS STORED THIS CODE

Example:

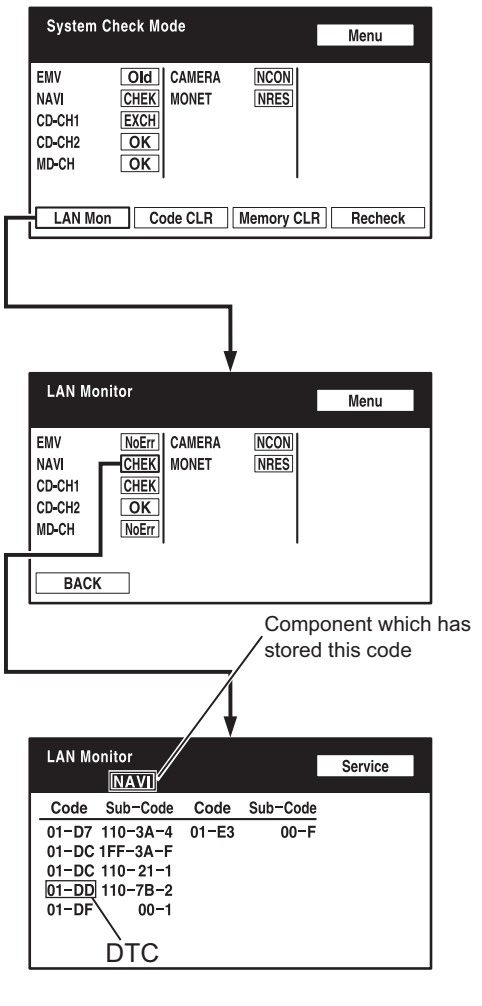

P E121199E06

(a) Enter the diagnostic mode.
(b) Press the "LAN Mon" switch to change to "LAN Monitor" mode.
(c) Identify the component which has stored this code.

Component Table:

Display	Component
AUDIO H/U	Radio receiver
DSP-AMP	Stereo component amplifier
G/W	Gateway ECU
NAVI	Navigation ECU
CLOCK	Clock assembly

HINT:
"NAVI" is the component which has stored this code in the example shown in the illustration.

NEXT

3 CHECK POWER SOURCE CIRCUIT OF COMPONENT WHICH HAS STORED THIS CODE

(a) Inspect the power source circuit of the component which has stored this code.
If the power source circuit is operating normally, proceed to the next step.

Component Table:

Component	Proceed to
Radio receiver (AUDIO H/U)	Radio receiver power source circuit (See page AV-147)
Stereo component amplifier (DSP-AMP)	Stereo component amplifier power source circuit (See page AV-149)
Gateway ECU (G/W)	Gateway ECU power source circuit (See page NS-166)
Navigation ECU (NAVI)	Navigation ECU power source circuit (See page NS-164)
Clock assembly (CLOCK)	Clock power source circuit (See page NS-168)

NS

NEXT

4	CHECK RADIO RECEIVER

Wire Harness View (12 Speaker):

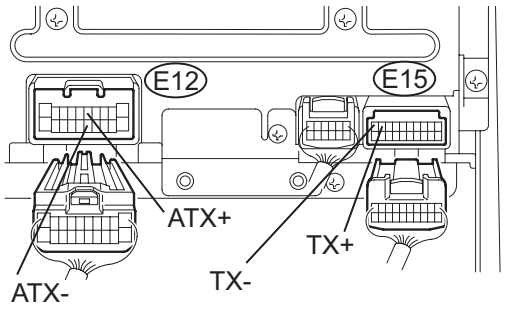

Wire Harness View (9 Speaker):

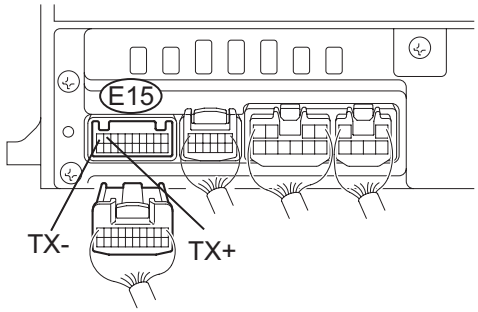

P

E126157E01

(a) Disconnect the radio receiver connectors.
(b) Measure the resistance according to the value(s) in the table below.

Standard resistance

Tester Connection	Condition	Specified Condition
ATX+ (E12-5) - ATX- (E12-15) (*1)	Always	60 to 80 Ω
TX+ (E15-9) - TX- (E15-10)	Always	60 to 80 Ω

*1: for 12 Speaker System

NG → REPLACE RADIO RECEIVER

OK

5	CHECK HARNESS AND CONNECTOR (MULTI-DISPLAY - COMPONENT WHICH HAS STORED THIS CODE)

HINT:
For details of the connectors, refer to "TERMINALS OF ECU" (See page NS-26).

(a) Referring to the AVC-LAN wiring diagram below, check the AVC-LAN circuit between the multi-display and the component which has stored this code.
  (1) Disconnect all connectors between the multi-display and the component which has stored this code.
  (2) Check for an open or short in the AVC-LAN circuit between the multi-display and the component which has stored this code.

OK:

There is no open or short circuit.

AVC-LAN WIRING DIAGRAM

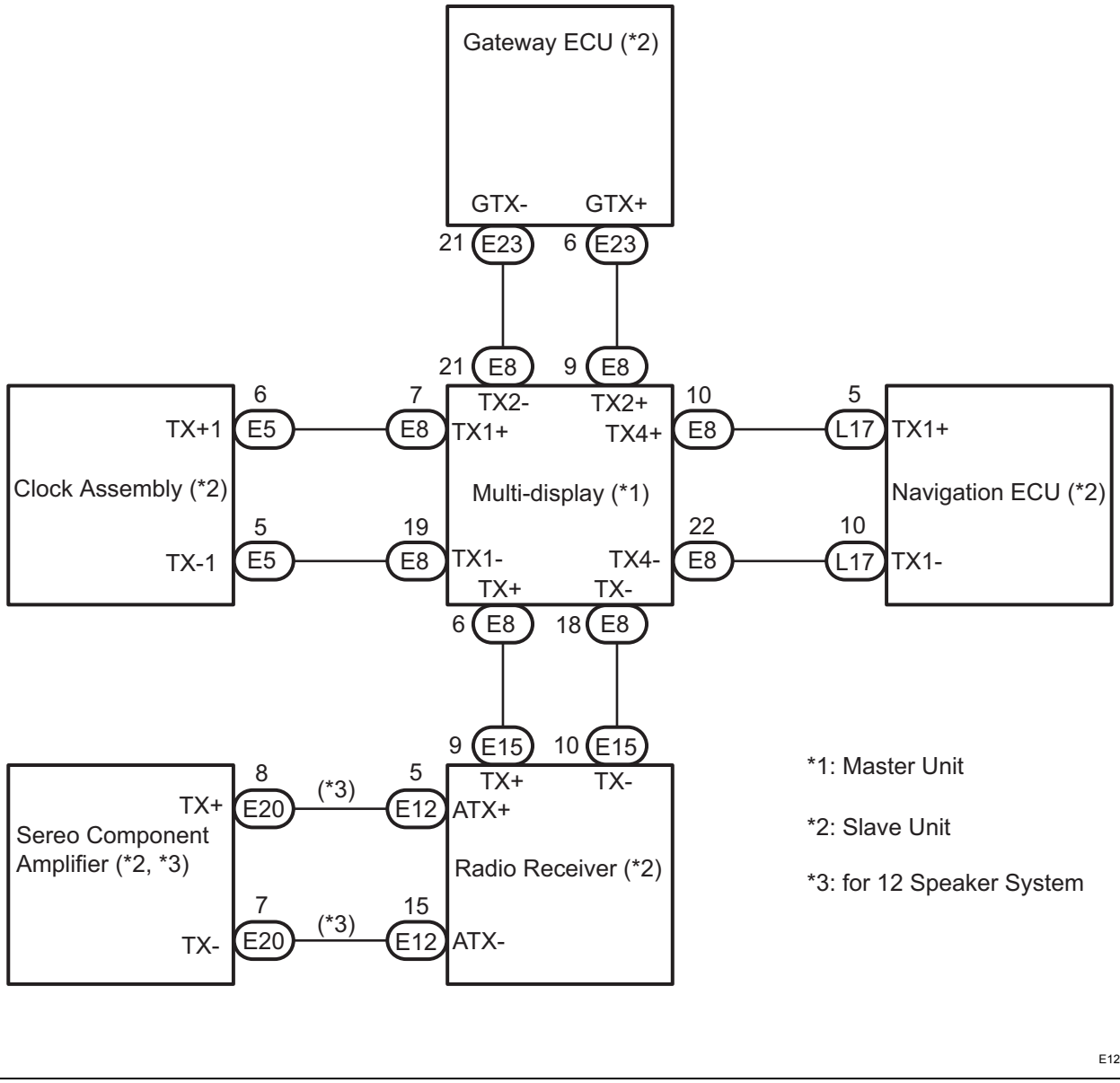

NS

NG → **REPAIR OR REPLACE HARNESS OR CONNECTOR**

OK

6	REPLACE COMPONENT WHICH HAS STORED THIS CODE

(a) Replace the component which has stored this code with a normal one and check if the same problem occurs again.
OK:
Same problem does not occur.

NG → **REPLACE MULTI-DISPLAY**

OK

END

DTC	01-DC	Transmission Error

DESCRIPTION

DTC No.	DTC Detection Condition	Trouble Area
01-DC *1	Transmission to component shown by sub-code failed. (Detecting this DTC does not always mean actual failure.)	If the same sub-code is recorded in other components, check harness for power supply and communication system of all components shown by code

HINT:
*1: This code may be stored if the engine is started, idled for 60 seconds and then started again (Key type ignition switch only).

NOTICE:

- **Before starting troubleshooting, be sure to clear DTCs to erase codes stored due to the reasons described in the HINT above. Then, check for DTCs and troubleshoot according to the output DTCs.**
- **The multi-display is the master unit.**
- **Be sure to clear and recheck DTCs after the inspection is completed to confirm that no DTCs are output.**

INSPECTION PROCEDURE

NOTICE:
Be sure to read DESCRIPTION before performing the following procedures.

NS

1	CHECK FOR DTC OF OTHER COMPONENTS

(a) Check if the component shown by the sub-code is displayed in the check result of the other components.
  (1) Check if "01-DC" is output for the other components.
  (2) If "01-DC" is output for any other components, check if the same physical address is displayed.
  HINT:
  For the list of the components shown by sub-codes, refer to the table in step 2.
  Result

Result	Proceed to
"01-DC" is output and the same physical address is displayed	**A**
"01-DC" is not output or the same physical address is not displayed	**B**

B → **Go to step 4**

A

2 IDENTIFY THE COMPONENT WHICH HAS STORED THIS CODE

Example:

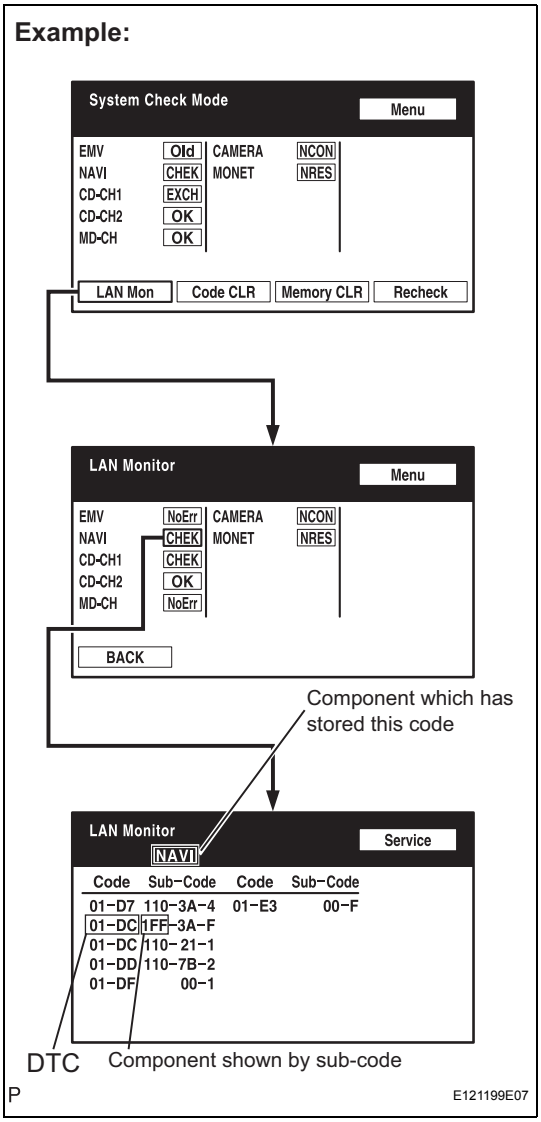

(a) Enter the diagnostic mode.
(b) Press the "LAN Mon" switch to change to "LAN Monitor" mode.
(c) Identify the component which has stored this code.

Component Table:

Display	Component
AUDIO H/U (190)	Radio receiver
DSP-AMP (440)	Stereo component amplifier
G/W (1C6)	Gateway ECU
NAVI (178)	Navigation ECU
EMV (110)	Multi-display
CLOCK (1D6)	Clock assembly

HINT:
"NAVI" is the component which has stored this code in the example shown in the illustration.

NEXT

3 CHECK COMPONENT WHICH HAS STORED THIS CODE

(a) Select the component which has stored this code.

Component Table:

Component	Proceed to
Gateway ECU (G/W)	Gateway ECU communication error (See page NS-135)
Radio receiver (AUDIO H/U)	Radio receiver communication error (See page NS-139)
Stereo component amplifier (DSP-AMP)	Stereo component amplifier communication error (See page NS-143)
Navigation ECU (NAVI)	Navigation ECU communication error (See page NS-151)
Multi-display (EMV)	Multi-display communication error (See page NS-147)
Clock assembly (1D6)	Clock communication error (See page NS-155)

NEXT

END

4	CLEAR DTC

(a) Clear the DTCs (See page NS-28).
HINT:
If "01-DC" is output for only one component, this may not indicate a malfunction.

NEXT

5	RECHECK DTC

(a) Recheck for DTCs and check if the same trouble occurs again.

OK:

Malfunction disappears.

NG → **Go to step 3**

OK

END

DTC	01-DD	Master Reset

DTC	01-E1	Voice Processing Device ON Error

DESCRIPTION

DTC No.	DTC Detection Condition	Trouble Area
01-DD *1	The device that should be the master has been disconnected after the engine starts.	• Multi-display power source circuit • AVC-LAN circuit between the multi-display and the component which has stored this code • Multi-display • Component which has stored this code
01-E1 *2	The AMP device records that the AMP output does not function even while the source device is operating.	

HINT:

- *1: This code may be stored if the engine is started and the ignition switch is turned to the START position again. (Key type ignition switch only)
- *2: Even if no fault is present, this trouble code may be stored depending on the battery condition or engine start voltage.

NOTICE:

- **Before starting troubleshooting, be sure to clear DTCs to erase codes stored due to the reasons described in the HINT above. Then, check for DTCs and troubleshoot according to the output DTCs.**
- **The multi-display is the master unit.**
- **Be sure to clear and recheck DTCs after the inspection is completed to confirm that no DTCs are output.**

NS

INSPECTION PROCEDURE

NOTICE:

Be sure to read DESCRIPTION before performing the following procedures:

1	CHECK MULTI-DISPLAY POWER SOURCE CIRCUIT

Refer to the multi-display power source circuit (See page NS-161).

If the power source circuit is operating normally, proceed to the next step.

NEXT

2	**INSPECT RADIO RECEIVER**

Wire Harness View (12 Speaker):

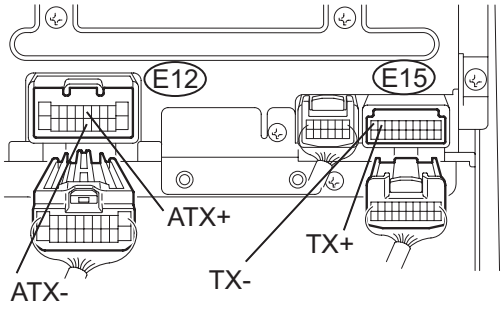

Wire Harness View (9 Speaker):

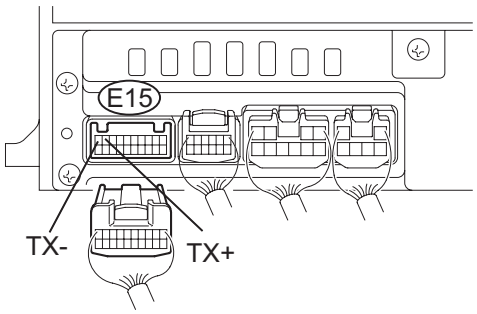

P E126157E01

(a) Disconnect the radio receiver connectors.
(b) Measure the resistance according to the value(s) in the table below.

Standard resistance

Tester Connection	Condition	Specified Condition
ATX+ (E12-5) - ATX- (E12-15) (*1)	Always	60 to 80 Ω
TX+ (E15-9) - TX- (E15-10)	Always	60 to 80 Ω

*1: for 12 Speaker System

NG → **REPLACE RADIO RECEIVER**

OK

NS

3	IDENTIFY THE COMPONENT WHICH HAS STORED THIS CODE

Example:

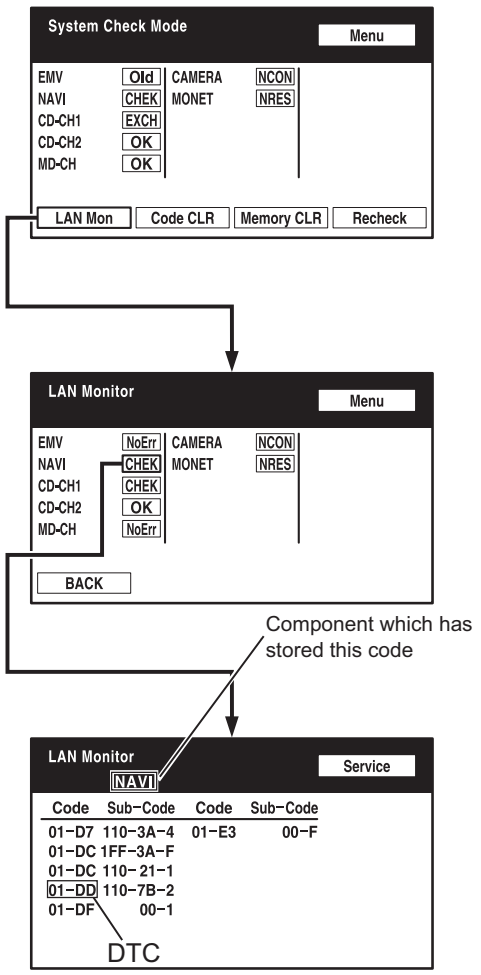

P E121199E06

(a) Enter the diagnostic mode.
(b) Press the "LAN Mon" switch to change to "LAN Monitor" mode.
(c) Identify the component which has stored this code.

Component Table:

Display	Component
AUDIO H/U	Radio receiver
DSP-AMP	Stereo component amplifier
G/W	Gateway ECU
NAVI	Navigation ECU
CLOCK	Clock assembly

HINT:
"NAVI" is the component which has stored this code in the example shown in the illustration.

NS

NEXT

4	CHECK HARNESS AND CONNECTOR (MULTI-DISPLAY - COMPONENT WHICH HAS STORED THIS CODE)

HINT:
For details of the connectors, refer to "TERMINALS OF ECU" (See page NS-26).

(a) Referring to the AVC-LAN wiring diagram below, check the AVC-LAN circuit between the multi-display and the component which has stored this code.
  (1) Disconnect all connectors between the multi-display and the component which has stored this code.
  (2) Check for an open or short in the AVC-LAN circuit between the multi-display and the component which has stored this code.

OK:
There is no open or short circuit.

AVC-LAN WIRING DIAGRAM

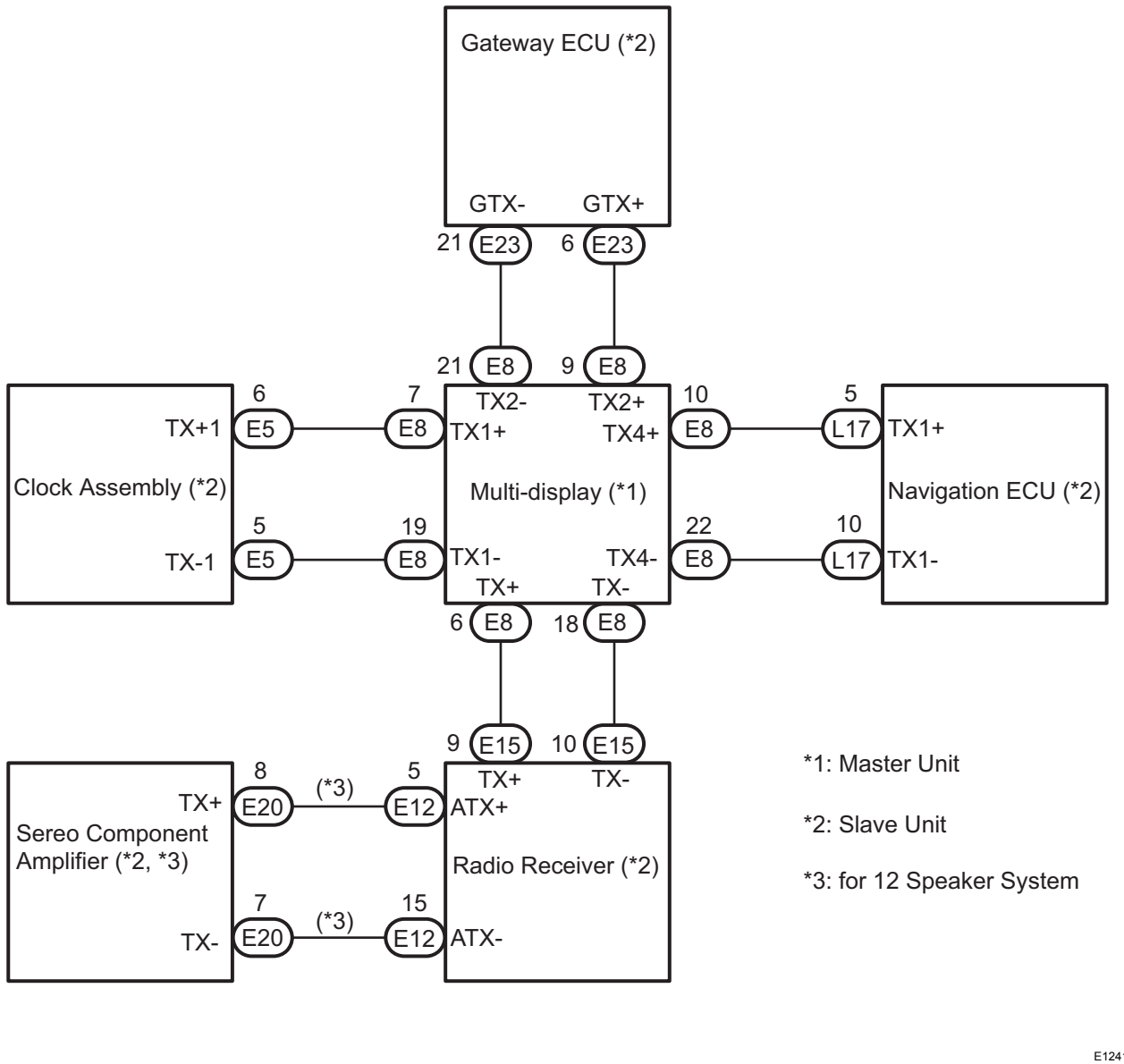

NG → **REPAIR OR REPLACE HARNESS OR CONNECTOR**

OK

5	**REPLACE MULTI-DISPLAY**

(a) Replace the multi-display with a normal one and check if the same problem occurs again.
OK:
Same problem does not occur.

NS

NG → REPLACE COMPONENT WHICH HAS STORED THIS CODE

OK

END

DTC	01-DF	Master Error

DESCRIPTION

DTC No.	DTC Detection Condition	Trouble Area
01-DF *1	• The device with a display fails and the master is switched to the audio device. • A communication error between sub-master (radio receiver) and master occurs.	• Multi-display power source circuit • AVC-LAN circuit between the multi-display and the component which has stored this code • AVC-LAN circuit between the multi-display and the radio receiver • Multi-display • Component which has stored this code

HINT:
*1: When 210 seconds have elapsed after disconnecting the power supply connector of the master component with the ignition switch on (ACC or IG), this code is stored.

NOTICE:

- **Before starting troubleshooting, be sure to clear DTCs to erase codes stored due to the reasons described in the HINT above. Then, check for DTCs and troubleshoot according to the output DTCs.**
- **The multi-display is the master unit.**
- **Be sure to clear and recheck DTCs after the inspection is completed to confirm that no DTCs are output.**

INSPECTION PROCEDURE

NOTICE:

Be sure to read DESCRIPTION before performing the following procedures:

1	CHECK MULTI-DISPLAY POWER SOURCE CIRCUIT

Refer to the multi-display power source circuit (See page NS-161).

If the power source circuit is operating normally, proceed to the next step.

NEXT

2	**INSPECT RADIO RECEIVER**

Wire Harness View (12 Speaker):

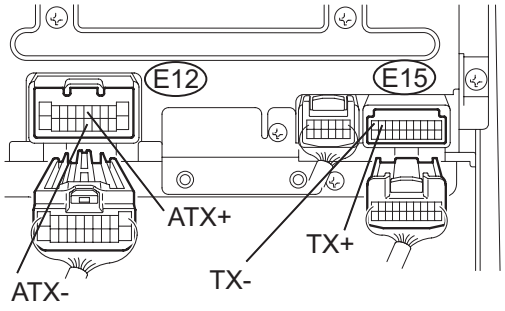

Wire Harness View (9 Speaker):

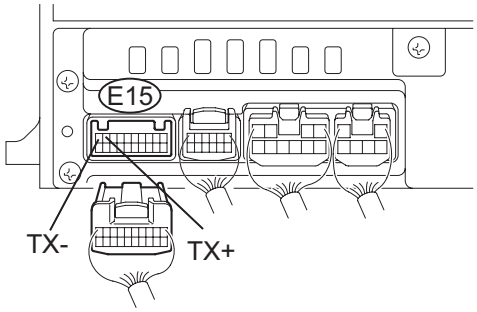

P

E126157E01

(a) Disconnect the radio receiver connectors.
(b) Measure the resistance according to the value(s) in the table below.

Standard resistance

Tester Connection	Condition	Specified Condition
ATX+ (E12-5) - ATX- (E12-15) (*1)	Always	60 to 80 Ω
TX+ (E15-9) - TX- (E15-10)	Always	60 to 80 Ω

*1: for 12 Speaker System

NG → **REPLACE RADIO RECEIVER**

OK

NS

3 IDENTIFY THE COMPONENT WHICH HAS STORED THIS CODE

Example:

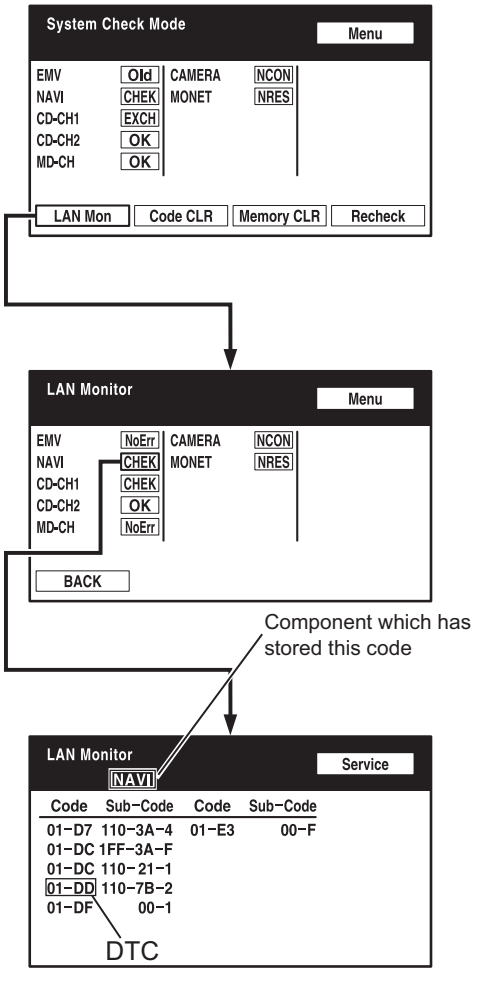

P E121199E06

(a) Enter the diagnostic mode.
(b) Press the "LAN Mon" switch to change to "LAN Monitor" mode.
(c) Identify the component which has stored this code.

Component Table:

Display	Component
AUDIO H/U	Radio receiver
DSP-AMP	Stereo component amplifier
G/W	Gateway ECU
NAVI	Navigation ECU
CLOCK	Clock assembly

HINT:
"NAVI" is the component which has stored this code in the example shown in the illustration.

NS

NEXT

4 CHECK HARNESS AND CONNECTOR (MULTI-DISPLAY - COMPONENT WHICH HAS STORED THIS CODE)

HINT:
For details of the connectors, refer to "TERMINALS OF ECU" (See page NS-26).

(a) Referring to the AVC-LAN wiring diagram below, check the AVC-LAN circuit between the multi-display and the component which has stored this code.
  (1) Disconnect all connectors between the multi-display and the component which has stored this code.
  (2) Check for an open or short in the AVC-LAN circuit between the multi-display and the component which has stored this code.

OK:
There is no open or short circuit.

AVC-LAN WIRING DIAGRAM

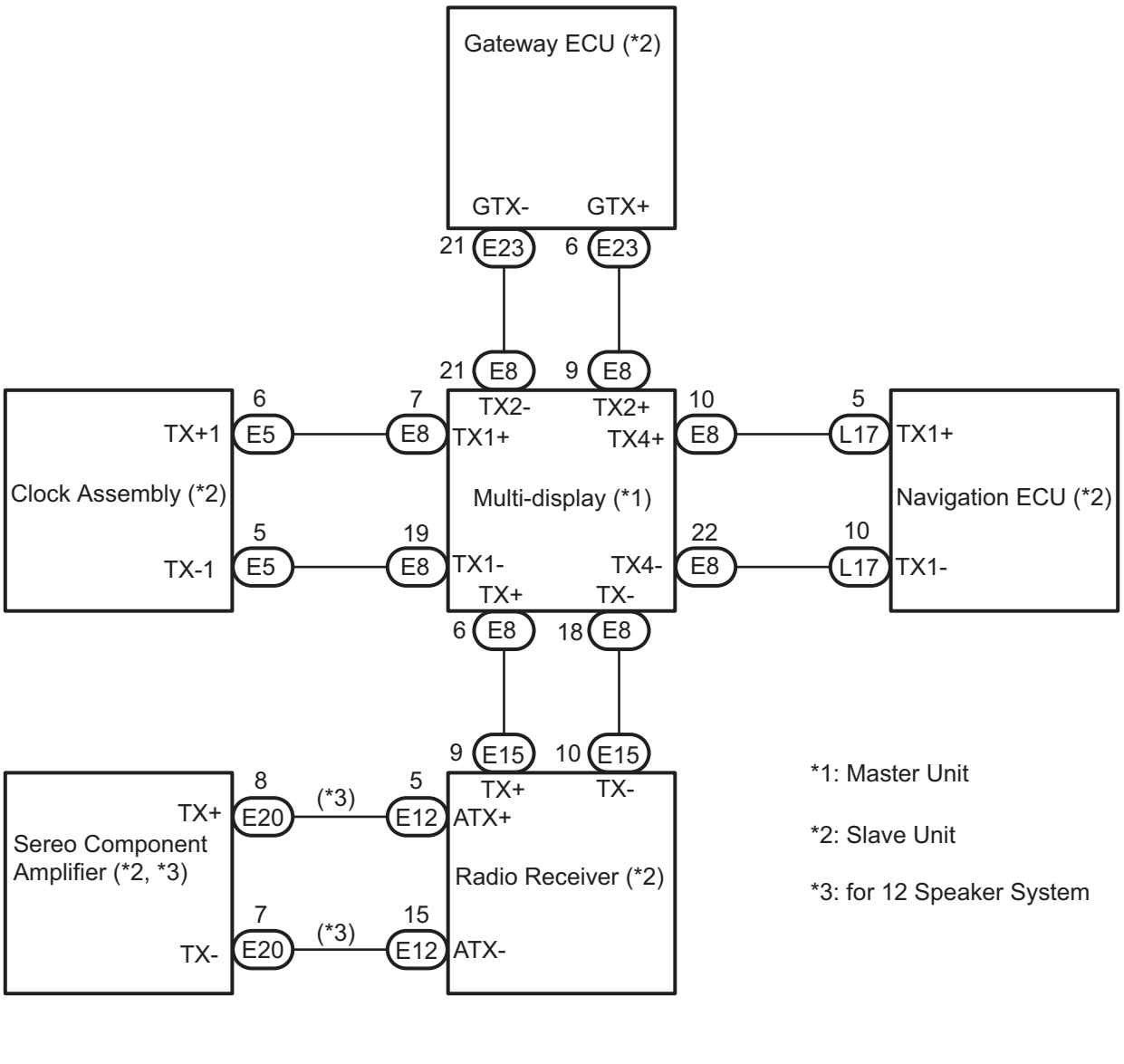

NG → **REPAIR OR REPLACE HARNESS OR CONNECTOR**

OK

5	CHECK HARNESS AND CONNECTOR (MULTI-DISPLAY - RADIO RECEIVER)

HINT:
For details of the connectors, refer to "TERMINALS OF ECU" (See page NS-26).

(a) Referring to the AVC-LAN wiring diagram below, check the AVC-LAN circuit between the multi-display and the radio receiver.

(1) Disconnect all connectors between the multi-display and the radio receiver.
(2) Check for an open or short in the AVC-LAN circuit between the multi-display and the radio receiver.
OK:
There is no open or short circuit.

AVC-LAN WIRING DIAGRAM

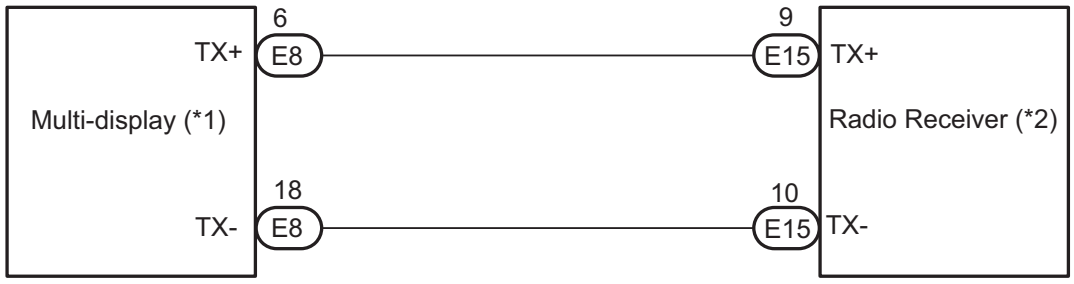

*1: Master Unit

*2: Slave Unit

P E111831E07

NS

NG → **REPAIR OR REPLACE HARNESS OR CONNECTOR**

OK

6	REPLACE MULTI-DISPLAY

(a) Replace the multi-display with a normal one and check if the same problem occurs again.
OK:
Same problem does not occur.

NG → **REPLACE COMPONENT WHICH HAS STORED THIS CODE**

OK

END

DTC	01-E0	Registration Complete Indication Error

DTC	01-E3	Registration Demand Transmission

DTC	01-E4	Multiple Frame Incomplete

DESCRIPTION

DTC No.	DTC Detection Condition	Trouble Area
01-E0	"Registration complete" signal from the master device cannot be received.	-
01-E3	The registration demand signal from the slave device is output. Or the registration demand signal is output by receiving connection confirmation signal from the sub-master device.	-
01-E4	The multiple frame transmission is incomplete.	-

HINT:
Even if no fault is present, this trouble code may be stored depending on the battery condition or engine start voltage.

INSPECTION PROCEDURE

HINT:
- After the inspection is completed, clear the DTCs.
- These DTCs do not indicate a malfunction.

DTC	01-E2	ON / OFF Indication Parameter Error

DESCRIPTION

DTC No.	DTC Detection Condition	Trouble Area
01-E2	The signal for ON/OFF control from the master device has a problem.	Multi-display

INSPECTION PROCEDURE

HINT:
After the inspection is completed, clear the DTCs.

1	REPLACE MULTI-DISPLAY

NEXT

END

DTC	34-10	Error in Picture Circuit

DTC	34-11	No Current in Back-light Error

DTC	34-12	Excess Current in Back-light Error

DESCRIPTION

DTC No.	DTC Detection Condition	Trouble Area
34-10	Error in power supply system for picture circuit	Multi-display
34-11	Decline in power output from inverter circuit for back-light	
34-12	Excess power output from inverter circuit for back-light	

INSPECTION PROCEDURE

HINT:
After the inspection is completed, clear the DTCs.

1	REPLACE MULTI-DISPLAY

NEXT

END

DTC	58-10	Gyro Error

DTC	80-10	Gyro Error

DESCRIPTION

DTC No.	DTC Detection Condition	Trouble Area
58-10	Ground short, power supply short, or open circuit in the gyro signal	• Gyro sensor • Navigation ECU
80-10	Ground short, power supply short, or open circuit in the gyro signal	

INSPECTION PROCEDURE

HINT:
After the inspection is completed, clear the DTCs.

1	CHECK VEHICLE SENSOR (NAVIGATION CHECK MODE)

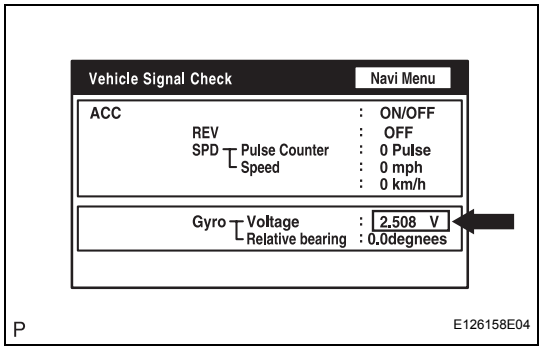

(a) Enter the "Navigation Check" mode (Vehicle Sensors) (See page NS-20).
(b) Check the gyro voltage.
Standard voltage:
0.1 to 4.5 V

NG → **REPLACE NAVIGATION ECU**

OK

2	CLEAR DTC

(a) Clear the DTCs (See page NS-28).

NEXT

3	RECHECK DTC

(a) Recheck for DTCs and check if the same trouble occurs again.
HINT:
If DTCs are detected frequently, replace the navigation ECU.
OK:
Malfunction disappears.

NG → **REPLACE NAVIGATION ECU**

NS

OK

END

DTC	58-11	GPS Receiver Error

DTC	80-11	GPS Receiver Error

DESCRIPTION

DTC No.	DTC Detection Condition	Trouble Area
58-11	• RTC, ROM, and RAM of the GPS receiver and TCXO error • GPS receiver is failed.	Navigation ECU
80-11	• RTC, ROM, and RAM of the GPS receiver and TCXO error • GPS receiver is failed.	

INSPECTION PROCEDURE

HINT:
After the inspection is completed, clear the DTCs.

1	REPLACE NAVIGATION ECU

NEXT

END

DTC	58-40	GPS Antenna Error

DTC	58-41	GPS Antenna Power Source Error

DTC	80-40	GPS Antenna Error

DTC	80-41	GPS Antenna Power Source Error

DESCRIPTION

DTC No.	DTC Detection Condition	Trouble Area
58-40	GPS antenna error	• Wire harness • GPS antenna • Navigation ECU
58-41	Error of the power source to the GPS antenna	
80-40	GPS antenna error	
80-41	Error of the power source to the GPS antenna	

INSPECTION PROCEDURE

HINT:
After the inspection is completed, clear the DTCs.

NS

1	CHECK HARNESS AND CONNECTOR (GPS ANTENNA - NAVIGATION ECU)

(a) Check that the GPS antenna cord is securely connected to the navigation ECU connector.
OK:
The cord is securely connected.

NG → **REPAIR OR REPLACE HARNESS OR CONNECTOR**

OK

2	REPLACE GPS ANTENNA

(a) Replace the GPS antenna with a normal one and check if the same problem occurs again.
(1) Clear the DTCs (See page NS-28).
(2) Recheck for DTCs and check if the same trouble occurs again.
OK:
Same problem does not occur.

NG → **REPLACE NAVIGATION ECU**

OK

END

DTC	58-42	Map Disc Read Error

DTC	80-42	Map Disc Read Error

DESCRIPTION

DTC No.	DTC Detection Condition	Trouble Area
58-42	• Player error • Scratches or dirt on the disc • Access to an invalid address due to software error	• Map disc • Navigation ECU
80-42	• Player error • Scratches or dirt on the disc • Access to an invalid address due to software error	

INSPECTION PROCEDURE

HINT:
After the inspection is completed, clear the DTCs.

1	CHECK MAP DISC

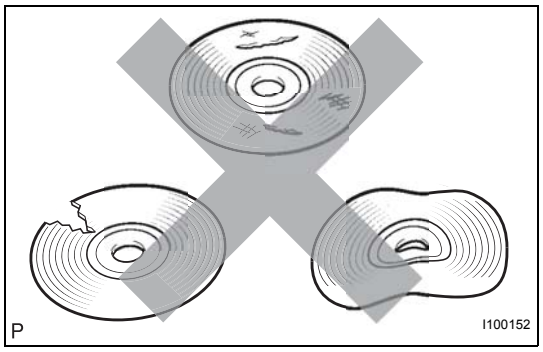

(a) Check that the map disc is not deformed or cracked.
OK:
No deformations or cracks on the map disc.

NG → **Go to step 4**

OK

2	CLEAN DISC

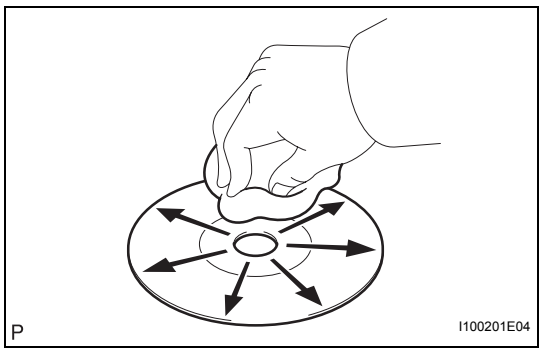

(a) Disc cleaning
(1) If dirt is on the disc surface, wipe it clean with a soft cloth from the inside to the outside in a radial direction.
NOTICE:
Do not use a conventional record cleaner or anti-static preservative.

NEXT

3	RECHECK DTC

(a) Clear the DTCs (See page NS-28).

NS

(b) Recheck for DTCs and check if the same trouble occurs again.
OK:
Same problem does not occur.

OK → **END**

NG

4	REPLACE MAP DISC

(a) Replace the map disc.
(b) Clear the DTCs and recheck for DTCs.
(c) Check if the same trouble occurs again.
OK:
Same problem does not occur.

OK → **END**

NG

REPLACE NAVIGATION ECU

DTC	58-43	SPD Signal Error

DTC	80-43	SPD Signal Error

DESCRIPTION

DTC No.	DTC Detection Condition	Trouble Area
58-43	A difference between the GPS speed and SPD pulse is detected.	• Speed signal circuit • Navigation ECU
80-43	A difference between the GPS speed and SPD pulse is detected.	

INSPECTION PROCEDURE

HINT:
After the inspection is completed, clear the DTCs.

1	CHECK VEHICLE SENSOR (NAVIGATION CHECK MODE)

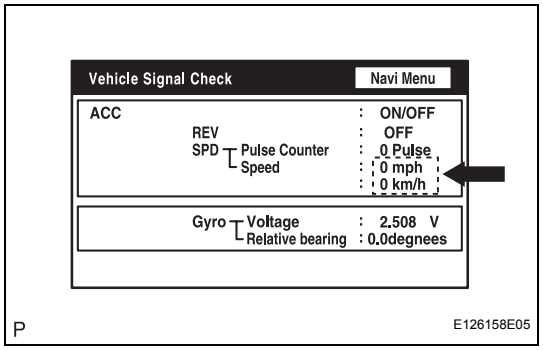

(a) Enter the "Navigation Check" mode (Vehicle Sensors) (See page NS-20).
(b) While driving the vehicle, compare the "SPD" indicator to the reading on the speedometer. Check if these readings are almost equal.
OK:
The readings are almost equal.

OK → **REPLACE NAVIGATION ECU**

NG

2	PROCEED TO NEXT CIRCUIT INSPECTION SHOWN IN PROBLEM SYMPTOMS TABLE

Refer to "Speed signal does not change in the navigation check mode" in the problem symptoms table (See page NS-24).

NEXT

END

NS

DTC	58-44	Player Error

DTC	80-44	Player Error

DESCRIPTION

DTC No.	DTC Detection Condition	Trouble Area
58-44	Map player error is detected.	Navigation ECU
80-44	Map player error is detected.	

INSPECTION PROCEDURE

HINT:
After the inspection is completed, clear the DTCs.

1	CHECK NAVIGATION ECU

(a) Check if a disc can be inserted or ejected normally.
OK:
A disc can be inserted or ejected normally.

NG → **REPLACE NAVIGATION ECU**

OK

2	RECHECK DTC

(a) Clear the DTCs (See page NS-28).
(b) Recheck for DTCs and check if the same trouble occurs again.
OK:
Same problem does not occur.

OK → **END**

NG

REPLACE NAVIGATION ECU

DTC	58-45	High Temperature

DTC	80-45	High Temperature

DESCRIPTION

DTC No.	DTC Detection Condition	Trouble Area
58-45	High map disc player temperature is detected. (Over 80°C)	Navigation ECU
80-45	High map disc player temperature is detected. (Over 80°C)	

INSPECTION PROCEDURE

HINT:
After the inspection is completed, clear the DTCs.

1	CHECK NAVIGATION ECU

(a) Park the vehicle in a cool place.
(b) Check that the temperature of the navigation ECU has become sufficiently low, then start the engine to verify the malfunction symptom.
OK:
Same problem does not occur.

NS

NG → **REPLACE NAVIGATION ECU**

OK

END

DTC	62-40	No Disc

DTC	63-40	No Disc

DESCRIPTION

DTC No.	DTC Detection Condition	Trouble Area
62-40	No disc is inserted	Radio receiver
63-40	No disc is inserted	

INSPECTION PROCEDURE

HINT:
After the inspection is completed, clear the DTCs.

1	CHECK RADIO RECEIVER

(a) Check if a disc is inserted.
OK:
A disc is inserted.

OK → **REPLACE RADIO RECEIVER**

NG

END

DTC	63-10	CD Changer Mechanical Error
DTC	62-10	CD Player Mechanical Error
DTC	62-11	CD Insertion and Eject Error
DTC	62-12	CD Reading Abnormal
DTC	63-11	CD Insertion and Eject Error
DTC	63-12	CD Reading Abnormal

DESCRIPTION

DTC No.	DTC Detection Condition	Trouble Area
63-10	A mechanical error in the CD changer is detected while the CD is not being inserted or ejected.	Radio receiver
63-11	CD insertion or ejection is failed.	
63-12	CD read problem occurs.	
62-10	A mechanical error in the CD player is detected while the CD is not being inserted or ejected.	
62-11	CD insertion or ejection is failed.	
62-12	CD read problem occurs.	

NS

INSPECTION PROCEDURE

HINT:
After the inspection is completed, clear the DTCs.

1	REPLACE RADIO RECEIVER

NEXT

END

DTC	63-41	Wrong Disc

DTC	62-41	Wrong Disc

DTC	62-42	Disc cannot be Read

DTC	63-42	Disc cannot be Read

DESCRIPTION

DTC No.	DTC Detection Condition	Trouble Area
63-41	An unsuitable disc is inserted.	• CD • Radio receiver
63-42	The disc cannot be read.	
62-41	An unsuitable disc is inserted.	
62-42	The disc cannot be read.	

INSPECTION PROCEDURE

HINT:
After the inspection is completed, clear the DTCs.

NS

1	CHECK DISC

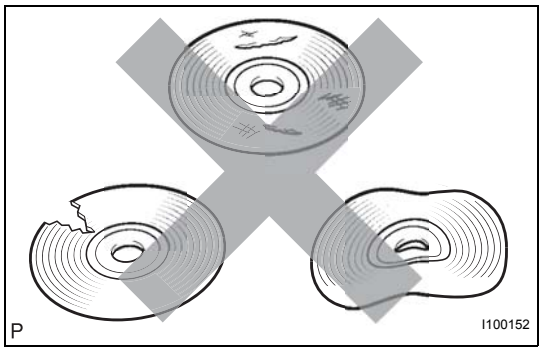

(a) Check that the disc is not deformed or cracked.
OK:
No deformations or cracks on the disc.

NG → **CHANGE DISC**

OK

2	CLEAN DISC

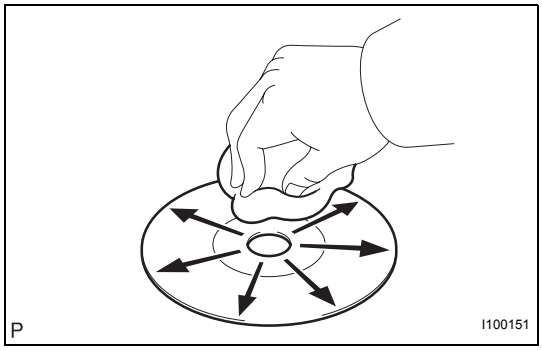

(a) Disc cleaning
(1) If dirt is on the disc surface, wipe it clean with a soft cloth from inside to outside in a radial direction.
NOTICE:
Do not use a conventional record cleaner or anti-static preservative.

NEXT

3	CLEAR DTC

(a) Clear the DTCs (See page NS-28).

NEXT

4	RECHECK DTC

(a) Recheck for DTCs and check if the same trouble occurs again.
OK:
Malfunction disappears.

OK → END

NG

5	REPLACE DISC

(a) Replace the disc with another and recheck.
(1) Replace the disc with another normal one.
(2) Clear the DTCs (See page NS-28).
(3) Recheck for DTCs and check if the same trouble occurs again.
OK:
Malfunction disappears.

NG → REPLACE RADIO RECEIVER

OK

END

DTC	63-43	CD-ROM Abnormal

DTC	62-43	CD-ROM Abnormal

DESCRIPTION

DTC No.	DTC Detection Condition	Trouble Area
63-43	CD-ROM operation is abnormal.	• CD • Radio receiver
62-43	CD-ROM operation is abnormal.	

INSPECTION PROCEDURE

HINT:
After the inspection is completed, clear the DTCs.

1	CHECK DISC

(a) Make sure that the disc is a normal disc, and that it is not deformed, flawed, stained, burred, or otherwise defective.
OK:
Normal disc
HINT:
Translucent or uniquely-shaped CDs cannot be played.

NG → **DISC IS FAULTY**

OK ↓

2	CHANGE DISC

(a) Replace the CD with another disc and recheck.
(1) Replace the CD with another normal disc.
(2) Clear the DTCs (See page NS-28).
(3) Recheck for DTCs and check if the same trouble occurs again.
OK:
Malfunction disappears.

NG → **REPLACE RADIO RECEIVER**

OK ↓

END

DTC	63-44	CD Abnormal
DTC	62-44	CD Abnormal
DTC	62-48	Excess Current
DTC	62-50	Tray Insertion / Ejection Error
DTC	63-48	Excess Current
DTC	63-50	Tray Insertion / Ejection Error

DESCRIPTION

DTC No.	DTC Detection Condition	Trouble Area
63-44	Operation error in the CD mechanism	Radio receiver
63-48	Excess current is present in the CD changer.	
63-50	Malfunction in insertion/ejection system	
62-44	Operation error in the CD mechanism	
62-48	Excess current is present in the CD player	
62-50	Malfunction in insertion / ejection system	

NS

INSPECTION PROCEDURE

HINT:
After the inspection is completed, clear the DTCs.

1	CLEAR DTC

(a) Clear the DTCs (See page NS-28).

NEXT

2	RECHECK DTC

(a) Recheck for DTCs and check if the same trouble occurs again.
HINT:
If DTCs are detected frequently, replace the radio receiver.
OK:
Malfunction disappears.

NG → **REPLACE RADIO RECEIVER**

OK

END

DTC	63-45	Eject Error

DTC	62-45	Eject Error

DTC	62-51	Elevator Error

DTC	62-52	Clamp Error

DTC	63-51	Elevator Error

DTC	63-52	Clamp Error

DESCRIPTION

DTC No.	DTC Detection Condition	Trouble Area
63-45	Magazine cannot be ejected.	Radio receiver
63-51	Mechanical error occurs during elevator operation.	
63-52	Error occurs in CD changer clamp.	
62-45	Magazine cannot be ejected.	
62-51	Mechanical error occurs during elevator operation.	
62-52	Error occurs in CD player clamp.	

INSPECTION PROCEDURE

HINT:
After the inspection is completed, clear the DTCs.

1	CHECK RADIO RECEIVER

(a) Check if a disc can be changed, inserted, or ejected normally.
OK:
Malfunction disappears.

NG → **REPLACE RADIO RECEIVER**

OK

END

DTC	63-46	Scratched / Reversed Disc

DTC	62-46	Scratched / Reversed Disc

DESCRIPTION

DTC No.	DTC Detection Condition	Trouble Area
63-46	Scratches or dirt is found on CD surface or CD is inserted upside down.	• CD • Radio receiver
62-46	Scratches or dirt is found on CD surface or CD is inserted upside down.	

INSPECTION PROCEDURE

HINT:
After the inspection is completed, clear the DTCs.

1	CHECK DISC

(a) Check that the CD is not inserted upside down.
OK:
CD or DVD is properly inserted.

NG → **INSERT DISC**

OK

2	CHECK DISC

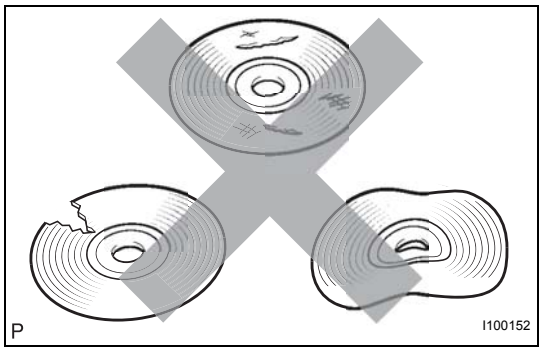

(a) Check that the disc is not deformed or cracked.
OK:
No deformations or cracks on the disc.

NG → **CHANGE DISC**

OK

3	CLEAN DISC

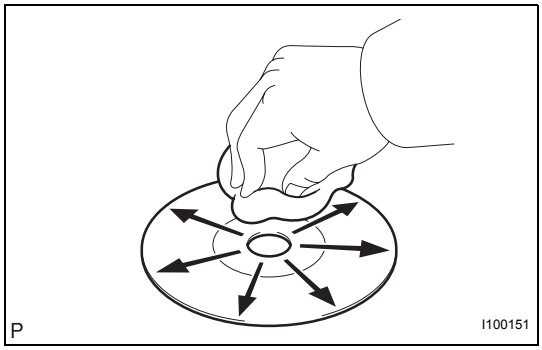

(a) Disc cleaning
(1) If dirt is on the disc surface, wipe it clean with a soft cloth from the inside to the outside in a radial direction.
NOTICE:
Do not use a conventional record cleaner or anti-static preservative.

NEXT

4	CLEAR DTC

(a) Clear the DTCs (See page NS-28).

NEXT

5	RECHECK DTC

(a) Recheck for DTCs and check if the same trouble occurs again.
OK:
Malfunction disappears.

OK	END

NG

6	REPLACE DISC

(a) Replace the disc with another and recheck.
(1) Replace the disc with another normal one.
(2) Clear the DTCs (See page NS-28).
(3) Recheck for DTCs and check if the same trouble occurs again.
OK:
Malfunction disappears.

NG	REPLACE RADIO RECEIVER

OK

END

DTC	63-47	High Temperature

DTC	62-47	High Temperature

DESCRIPTION

DTC No.	DTC Detection Condition	Trouble Area
63-47	Sensor detects that CD unit temperature is high. (Over 80°C)	Radio receiver
62-47	Sensor detects that CD unit temperature is high. (Over 80°C)	

INSPECTION PROCEDURE

HINT:
After the inspection is completed, clear the DTCs.

1	CHECK RADIO RECEIVER

(a) Park the vehicle in a cool place.
(b) Check that the temperature of the radio receiver has become sufficiently low, then start the engine. Check that the malfunction disappears.
OK:
Malfunction disappears.

NS

NG → **REPLACE RADIO RECEIVER**

OK

END

No Image Appears on Multi-display

INSPECTION PROCEDURE

1	CHECK DISPLAY SETTING

(a) Check that the display is not in "Screen OFF" mode.
OK:
The display setting is not in "Screen OFF" mode.

NG → **CHANGE SCREEN TO "SCREEN ON" MODE**

OK ↓

2	CHECK IMAGE QUALITY SETTING

(a) Check that the screen color quality can be set.
OK:
Setting is possible.

NG → **Go to step 3**

OK ↓

SET SCREEN COLOR QUALITY TO NORMAL

3	CHECK CABIN

(a) Check that condensation is not likely to occur in the cabin, and that the temperature is not high or extremely low in the cabin.
HINT:
- A humid cabin and a rapid change in temperature may lead to condensation. Condensation in the cabin may short circuit the screen.
- The appropriate cabin temperature is 20 to 30°C (68 to 86°F).

OK:
Condensation is not likely and temperature is not high or extremely low.

NG → **SET CABIN TO APPROPRIATE TEMPERATURE**

OK ↓

PROCEED TO NEXT CIRCUIT INSPECTION SHOWN IN PROBLEM SYMPTOMS TABLE

Display does not Dim when Light Control Switch is Turned ON

INSPECTION PROCEDURE

1 CHECK IMAGE QUALITY SETTING

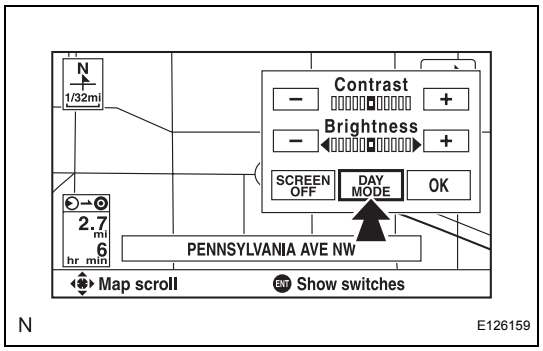

(a) Enter the display adjustment screen by pressing the "DISP" switch.
(b) Turn the light control switch to the TAIL position.
(c) Check if "DAY MODE" on the display adjustment is ON.
OK:
"DAY MODE" is ON.

NG → **Go to step 2**

OK

TURN "DAY MODE" SETTING OFF

NS

2 CHECK VEHICLE SIGNAL (DISPLAY CHECK MODE)

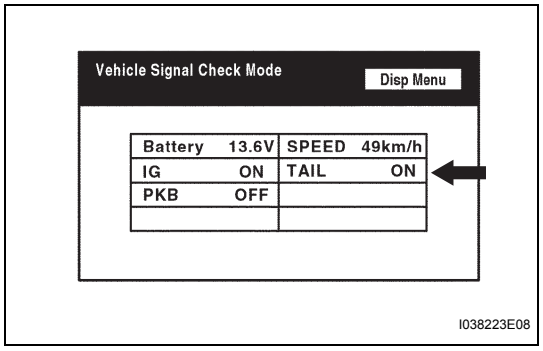

(a) Enter the "Display Check Mode" (See page NS-17).
(b) Check that the display changes between ON and OFF according to the light control switch operation.
OK

Light Control Switch	Display
TAIL or ON	ON
OFF	OFF

HINT:
The display is updated once per second. It is normal for the display to lag behind the actual switch operation.

NG → **PROCEED TO NEXT CIRCUIT INSPECTION SHOWN IN PROBLEM SYMPTOMS TABLE**

OK

REPLACE MULTI-DISPLAY

Panel Switches do not Function

INSPECTION PROCEDURE

1	CHECK NAVIGATION CONTROLLER

(a) Check for foreign matter around the switches that might prevent operation.
OK:
No foreign matter is found.

NG → **REMOVE ANY FOREIGN OBJECT**

OK

2	CHECK REMOTE COMMANDER CHECK (DISPLAY CHECK MODE)

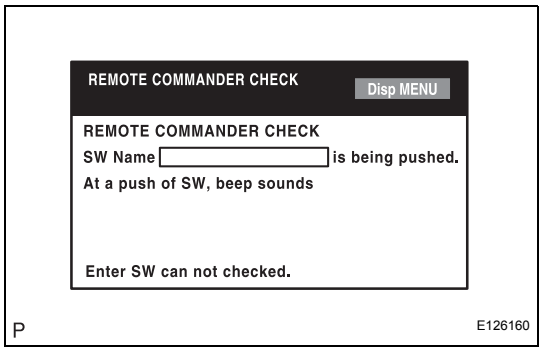

(a) Enter the "Display Check Mode" (See page NS-17).
(b) Operate the abnormal switch and check if the switch name and status are correctly displayed.
OK:
The switch name and status are correctly displayed as operated.

NG → **PROCEED TO NEXT CIRCUIT INSPECTION SHOWN IN PROBLEM SYMPTOMS TABLE**

OK

REPLACE MULTI-DISPLAY

NS

Screen Flicker or Color Distortion

INSPECTION PROCEDURE

1	CHECK DISPLAY SETTING

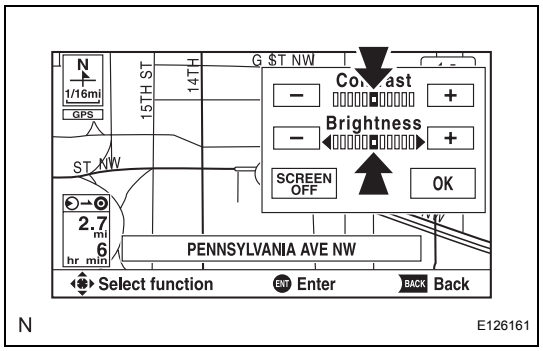

(a) Enter the display adjustment screen by pressing the "DISP" switch.
(b) Reset display settings (contrast, brightness) and check that the screen appears normal.
OK:
Returns to normal.

NG → **Go to step 2**

OK

END

2	CHECK CABIN

(a) Check that the cabin temperature is warmer than -20°C (-4.0°F).
OK:
Cabin is warmer than -20°C (-4.0°F).

NG → **HEAT CABIN**

OK

NS

3	CHECK COLOR BAR (DISPLAY CHECK MODE)

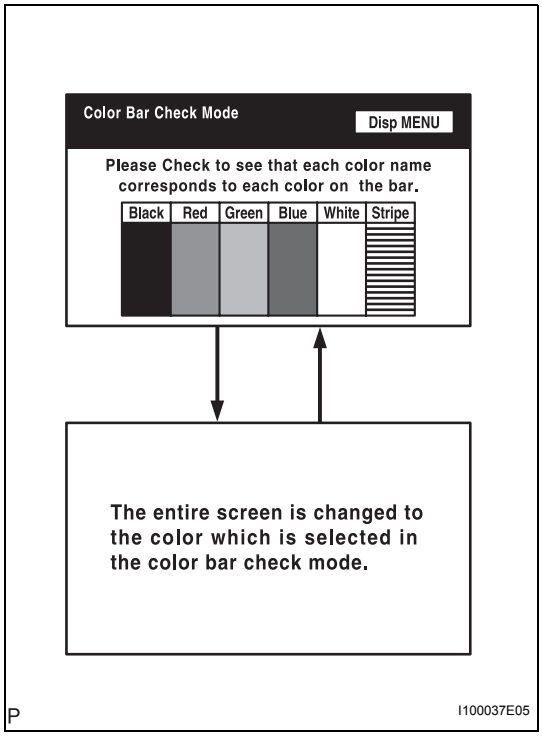

(a) Enter the "Display Check Mode" (See page NS-17).
(b) Check that the color bars match the displayed names.
OK:
Color bars match the displayed names.

NG → **REPLACE MULTI-DISPLAY**

OK

4	CHECK NAVI COLOR BAR (NAVIGATION CHECK MODE)

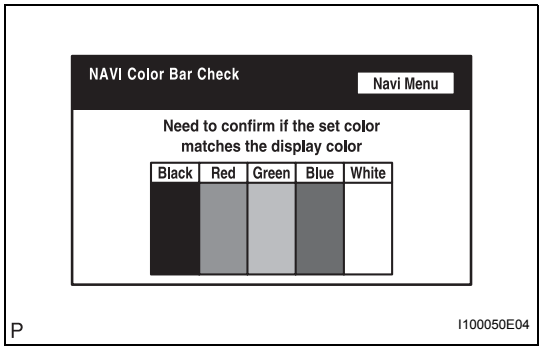

(a) Enter the "Navigation Check Mode" (See page NS-20).
(b) Check that the color bars match the displayed names.
OK:
Color bars match the displayed names.

NG → **REPLACE MULTI-DISPLAY**

OK

PROCEED TO NEXT CIRCUIT INSPECTION SHOWN IN PROBLEM SYMPTOMS TABLE

NS

MAP Disc cannot be Inserted

INSPECTION PROCEDURE

1	CHECK MAP DISC

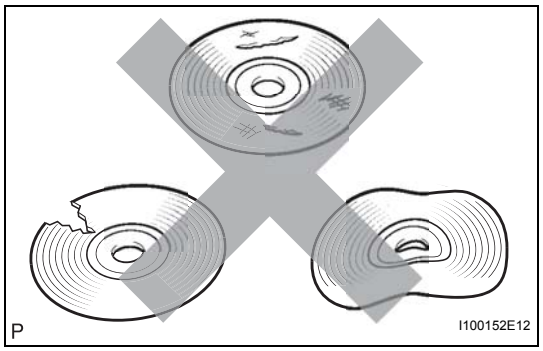

(a) Check that the map disc is not deformed or cracked.
OK:
No deformations or cracks on map disc.

NG → **REPLACE MAP DISC**

OK

PROCEED TO NEXT CIRCUIT INSPECTION SHOWN IN PROBLEM SYMPTOMS TABLE

Vehicle Position Mark Deviates Greatly

INSPECTION PROCEDURE

1 CHECK GPS MARK

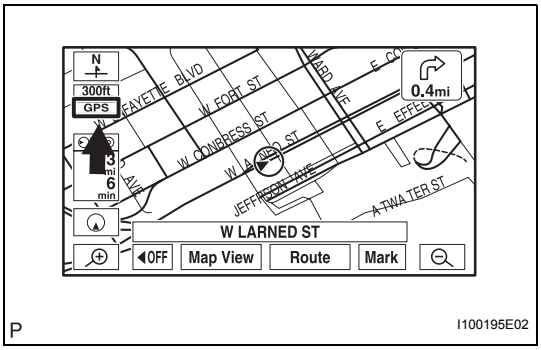

(a) Check that the GPS mark is displayed.
OK:
GPS mark is displayed.

NG → **GO TO "GPS MARK IS NOT DISPLAYED" IN PROBLEM SYMPTOMS TABLE**

OK

2 CHECK VEHICLE SIGNAL (NAVIGATION CHECK MODE)

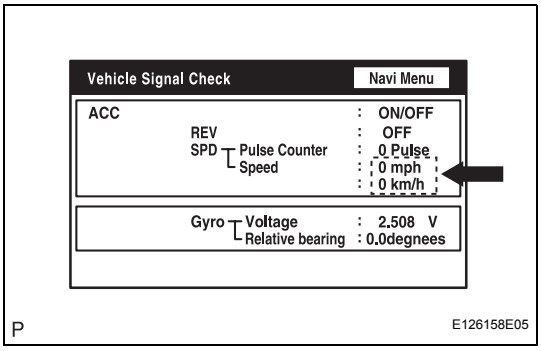

(a) Enter the "Navigation Check Mode" (See page NS-20).
(b) While driving the vehicle, compare the "Speed" indicator to the reading on the speedometer. Check that these readings are almost equal.
OK:
The readings are almost equal.

NG → **GO TO "SPEED SIGNAL DOES NOT CHANGE IN NAVIGATION CHECK MODE" IN PROBLEM SYMPTOMS TABLE**

OK

3 CHECK VEHICLE SIGNAL (NAVIGATION CHECK MODE)

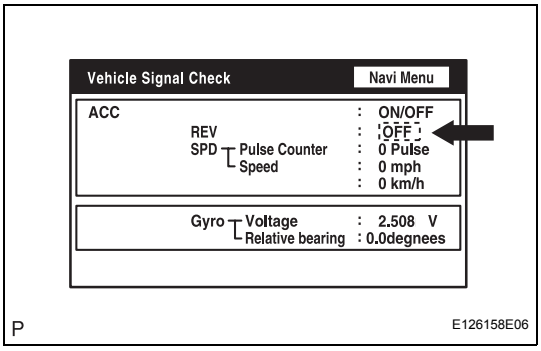

(a) Check that the display changes between ON and OFF according to the shift lever operation (P and R).
OK

Shift Lever Position	Display
P	OFF
R	ON

HINT:
The display is updated once per second. It is normal for the display to lag behind the actual switch operation.

NG → **GO TO "REVERSE SIGNAL DOES NOT CHANGE IN NAVIGATION CHECK MODE" IN PROBLEM SYMPTOMS TABLE**

OK

PROCEED TO NEXT CIRCUIT INSPECTION SHOWN IN PROBLEM SYMPTOMS TABLE

Cursor or MAP Rotates when Vehicle Stopped

INSPECTION PROCEDURE

1	CHECK CONDITION

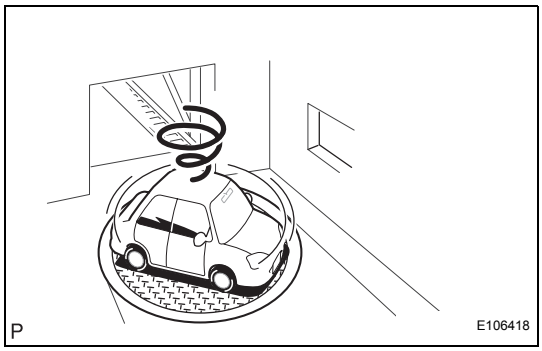

(a) Check with the customer if the vehicle has been turned by a turntable.
OK:
Vehicle has not been turned by turntable.
HINT:
If the vehicle is rotated on a turntable with the ignition switch is turned on (ACC or IG), the system may store the angular velocity. As a result, the vehicle position cursor may deviate.

NG → **TURN IGNITION SWITCH TO ON (IG) POSITION WHEN VEHICLE IS COMPLETELY STOPPED**

OK

PROCEED TO NEXT CIRCUIT INSPECTION SHOWN IN PROBLEM SYMPTOMS TABLE

Vehicle Position Mark is not Updated

INSPECTION PROCEDURE

1 CHECK MAP DISC

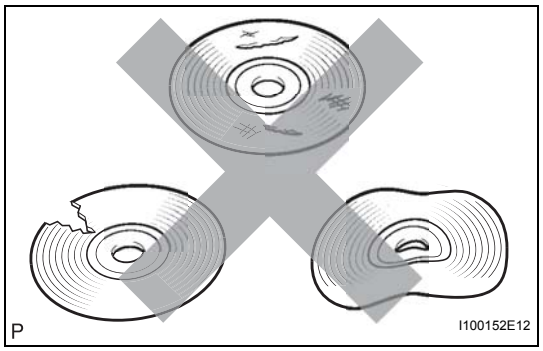

(a) Check that the map disc is not deformed or cracked.
OK:
No deformations or cracks on map disc.

NG → **REPLACE MAP DISC**

OK

2 CHECK NAVIGATION DISPLAY

(a) Check if a touch scroll can be performed on the map display.
OK:
Touch scroll can be performed.

NG → **PROCEED TO NEXT CIRCUIT INSPECTION SHOWN IN PROBLEM SYMPTOMS TABLE**

OK

3 CHECK VEHICLE SIGNAL (NAVIGATION CHECK MODE)

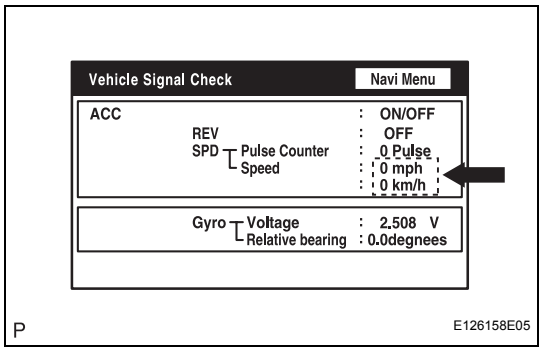

(a) Enter the "Navigation Check Mode" (See page NS-20).
(b) While driving the vehicle, compare the "Speed" indicator to the reading on the speedometer. Check if these readings are almost equal.
OK:
The readings are almost equal.

NG → **GO TO "SPEED SIGNAL DOES NOT CHANGE IN NAVIGATION CHECK MODE" IN PROBLEM SYMPTOMS TABLE**

OK

PROCEED TO NEXT CIRCUIT INSPECTION SHOWN IN PROBLEM SYMPTOMS TABLE

NS

Current Position Display does not Appear

INSPECTION PROCEDURE

1	CHECK MAP DISC

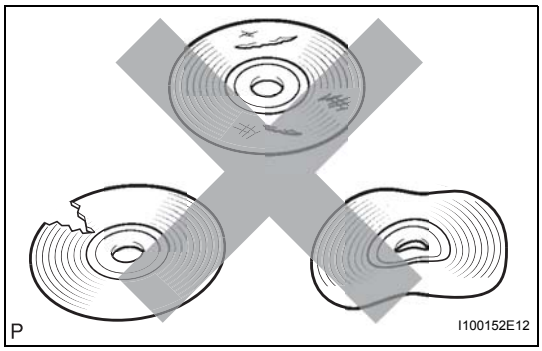

(a) Check that the map disc is not deformed or cracked.
OK:
No deformations or cracks on map disc.

NG → **REPLACE MAP DISC**

OK

PROCEED TO NEXT CIRCUIT INSPECTION SHOWN IN PROBLEM SYMPTOMS TABLE

GPS Mark is not Displayed

INSPECTION PROCEDURE

1	CHECK CABIN

(a) Check the cabin for any object that might interrupt radio reception on the instrument panel. If such an object exists, remove it and check if the GPS mark reappears.
HINT:
The GPS uses extremely faint radio waves originating from satellites. If the signal is interrupted by obstructions or other radio waves, the GPS may not be able to properly receive the signal.
OK:
Mark appears.

NG → **Go to step 2**

OK

END

2	CHECK SURROUNDINGS

(a) Check if the vehicle is in a location where GPS signal reception is poor. If the vehicle is in such a place, relocate the vehicle and check if the GPS mark reappears.
HINT:
The GPS uses 24 satellites in 6 orbits. At any point in time, 4 satellites should be able to pinpoint your vehicle. However, GPS signals may not reach the vehicle due to influence from the surroundings, vehicle direction and time. For illustrated examples, see below.

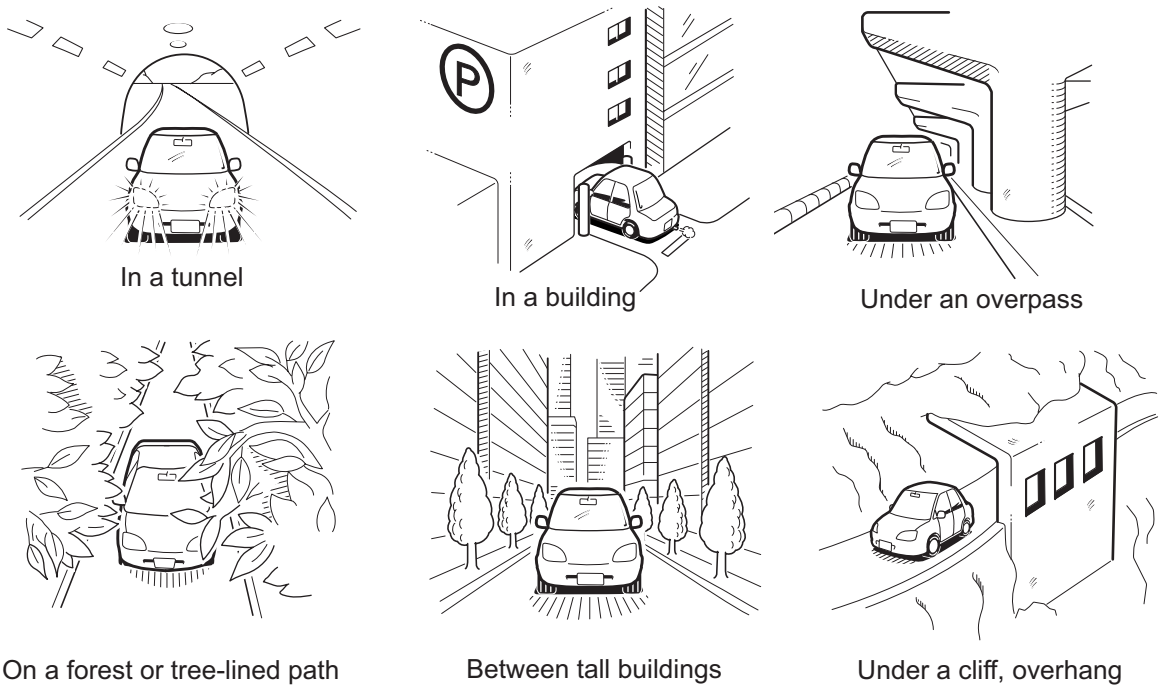

OK:
GPS mark is displayed.

NG → **Go to step 3**

OK

SYSTEM RETURN TO NORMAL

3 CHECK GPS INFORMATION (NAVIGATION CHECK MODE)

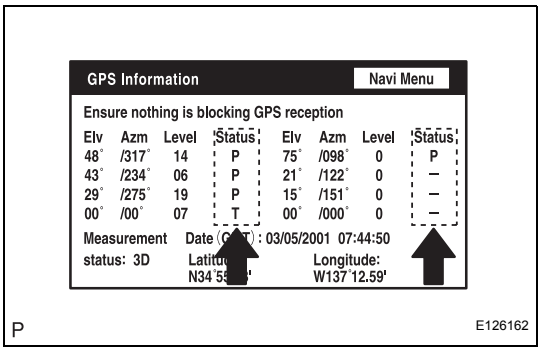

(a) Enter the "Navigation Check Mode" (See page NS-20).
(b) Check how many of the following codes appear in the "STS" column.
For DENSO Made:
T, P
For AISIN AW Made:
08H, 04H
OK:
At least 3 codes appear.

NG → **PROCEED TO NEXT CIRCUIT INSPECTION SHOWN IN PROBLEM SYMPTOMS TABLE**

OK

REPLACE NAVIGATION ECU

Voice Guidance does not Function

INSPECTION PROCEDURE

1 CHECK NAVIGATION SETTING

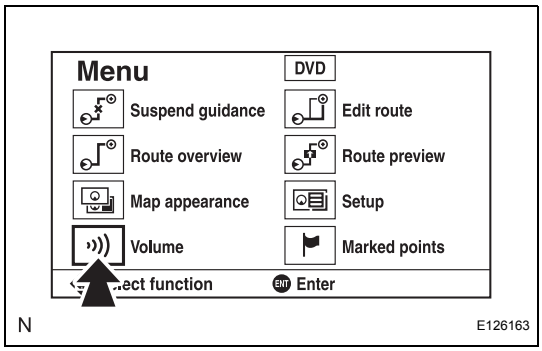

(a) Enter the "Menu" screen by pressing the "MENU" switch.
(b) Select "Volume".

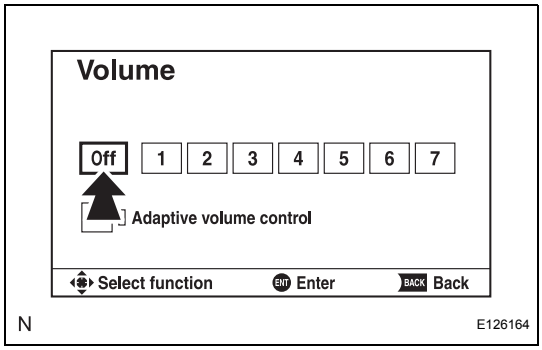

(c) Check that "Off" is not selected.
OK:
"Off" is not selected.

NG → **TURN VOICE GUIDANCE VOLUME UP TO 4 USING VOICE ADJUSTMENT SWITCHES**

OK

2 CHECK NAVIGATION SETTING

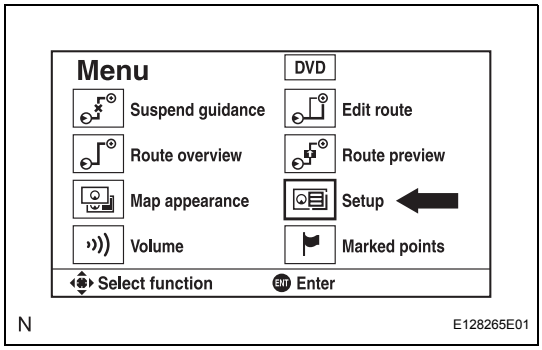

(a) Enter the "Menu" screen by pressing the "MENU" switch.
(b) Select "Setup".

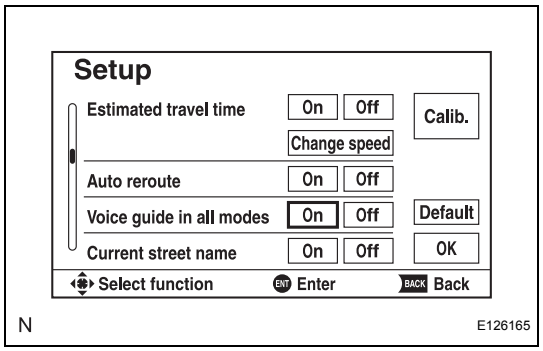

(c) Check that "Voice guide in all modes" is not OFF.
OK:
Voice guide in all modes is not OFF.

NG → **TURN VOICE GUIDANCE IN ALL MODES "ON"**

OK

3	CHECK MAP DISC

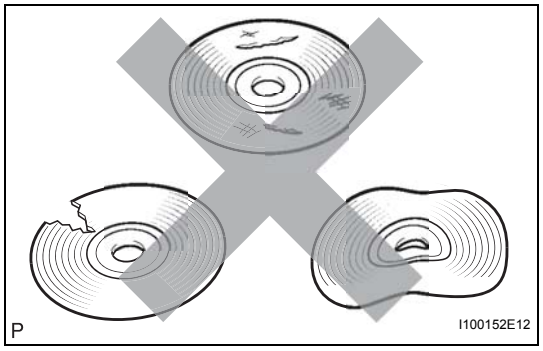

(a) Check that the map disc is not deformed or cracked.
OK:
No deformations or cracks on map disc.

NG → **REPLACE MAP DISC**

OK

4	CHECK RADIO RECEIVER

(a) Check that audio sound can be heard from the driver side speaker.
OK:
Audio sound can be heard.

NG → **PROCEED TO NEXT CIRCUIT INSPECTION SHOWN IN PROBLEM SYMPTOMS TABLE**

OK

REPLACE NAVIGATION ECU

NS

MAP Display Incomplete

INSPECTION PROCEDURE

1	CHECK MAP DISC

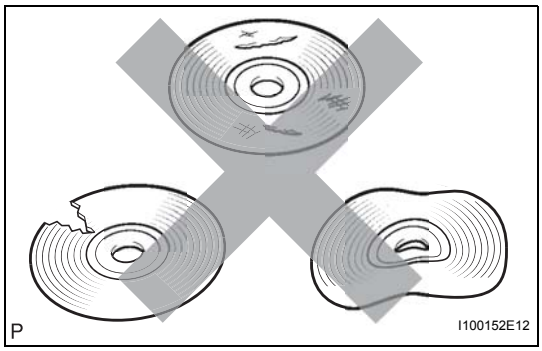

(a) Check that the map disc is not deformed or cracked.
OK:
No deformations or cracks on map disc.

NG → **REPLACE MAP DISC**

OK

2	CHECK NAVIGATION DISPLAY

(a) Check that displays other than the navigation display are complete.
OK:
No other incomplete displays are found.

NG → **PROCEED TO NEXT CIRCUIT INSPECTION SHOWN IN PROBLEM SYMPTOMS TABLE**

OK

REPLACE NAVIGATION ECU

Route cannot be Calculated

INSPECTION PROCEDURE

1	CHECK MAP DISC

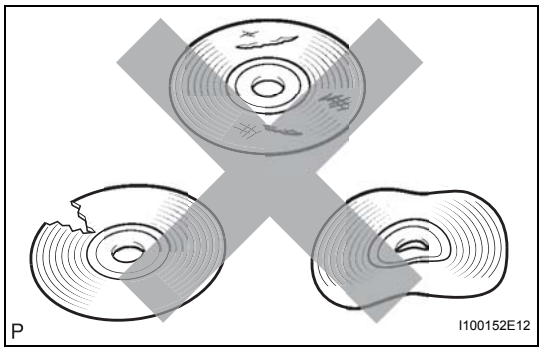

(a) Check that the map disc is not deformed or cracked.
OK:
No deformations or cracks on map disc.

NG	REPLACE MAP DISC

OK

2	SET DESTINATION

(a) Set another destination and check if the system can calculate the route correctly.
OK:
Route can be correctly calculated.

NG	PROCEED TO NEXT CIRCUIT INSPECTION SHOWN IN PROBLEM SYMPTOMS TABLE

OK

END

NS

Voice Recognition Difficulty

INSPECTION PROCEDURE

1	CHECK CONDITION

(a) Check if the system's voice recognition level is low by using only one particular voice.
OK:
System's voice recognition level is low with any voice.

NG → **END**

OK ↓

2	CHECK MAP DISC

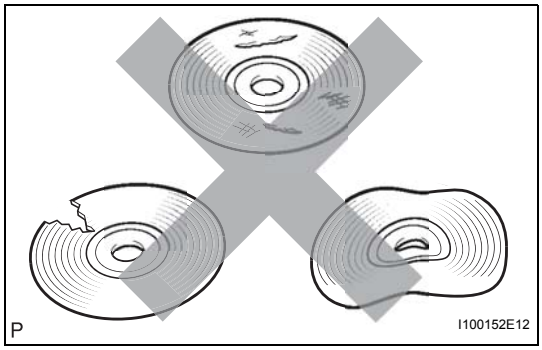

(a) Check that the map disc is not deformed or cracked.
OK:
No deformations or cracks on map disc.

NG → **REPLACE MAP DISC**

OK ↓

3	CHECK MAP DISC

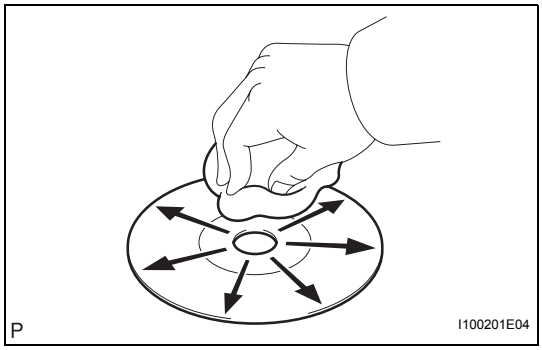

(a) Check for dirt on the map disc surface.
OK:
No dirt is on map disc surface.
NOTICE:
Do not use a conventional record cleaner or anti-static preservative.
HINT:
If the disc is dirty, clean the disc by wiping the disc's surface radially with a soft cloth.

NG → **CLEAN MAP DISC**

OK ↓

PROCEED TO NEXT CIRCUIT INSPECTION SHOWN IN PROBLEM SYMPTOMS TABLE

Voice is not Recognized

INSPECTION PROCEDURE

1	CHECK MAP DISC

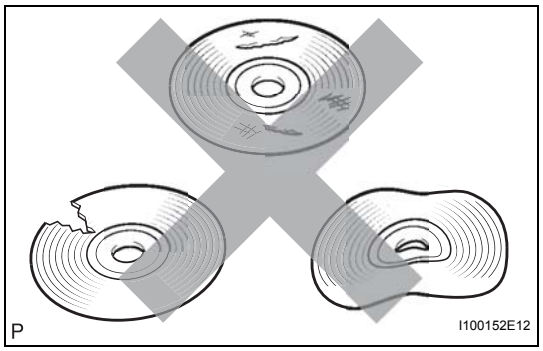

(a) Check that the map disc is not deformed or cracked.
OK:
No deformations or cracks on map disc.

NG → **REPLACE MAP DISC**

OK

2	CHECK MAP DISC

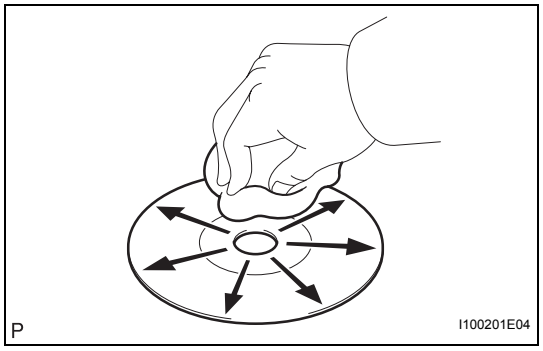

(a) Check for dirt on the map disc surface.
OK:
No dirt is on the map disc surface.
NOTICE:
Do not use a conventional record cleaner or anti-static preservative.
HINT:
If the disc is dirty, clean the disc by wiping the disc surface radially with a soft cloth.

NG → **CLEAN MAP DISC**

OK

PROCEED TO NEXT CIRCUIT INSPECTION SHOWN IN PROBLEM SYMPTOMS TABLE

NS

Steering Pad Switch Circuit

DESCRIPTION

This circuit sends an operation signal from the steering pad switch to the radio receiver.
If there is an open in the circuit, the navigation system cannot be operated by the steering pad switch.
If there is a short in the circuit, the resulting condition is the same as if the switch were continuously depressed. Therefore, the navigation system cannot be operated by the steering pad switch, and the navigation system itself cannot function.

WIRING DIAGRAM

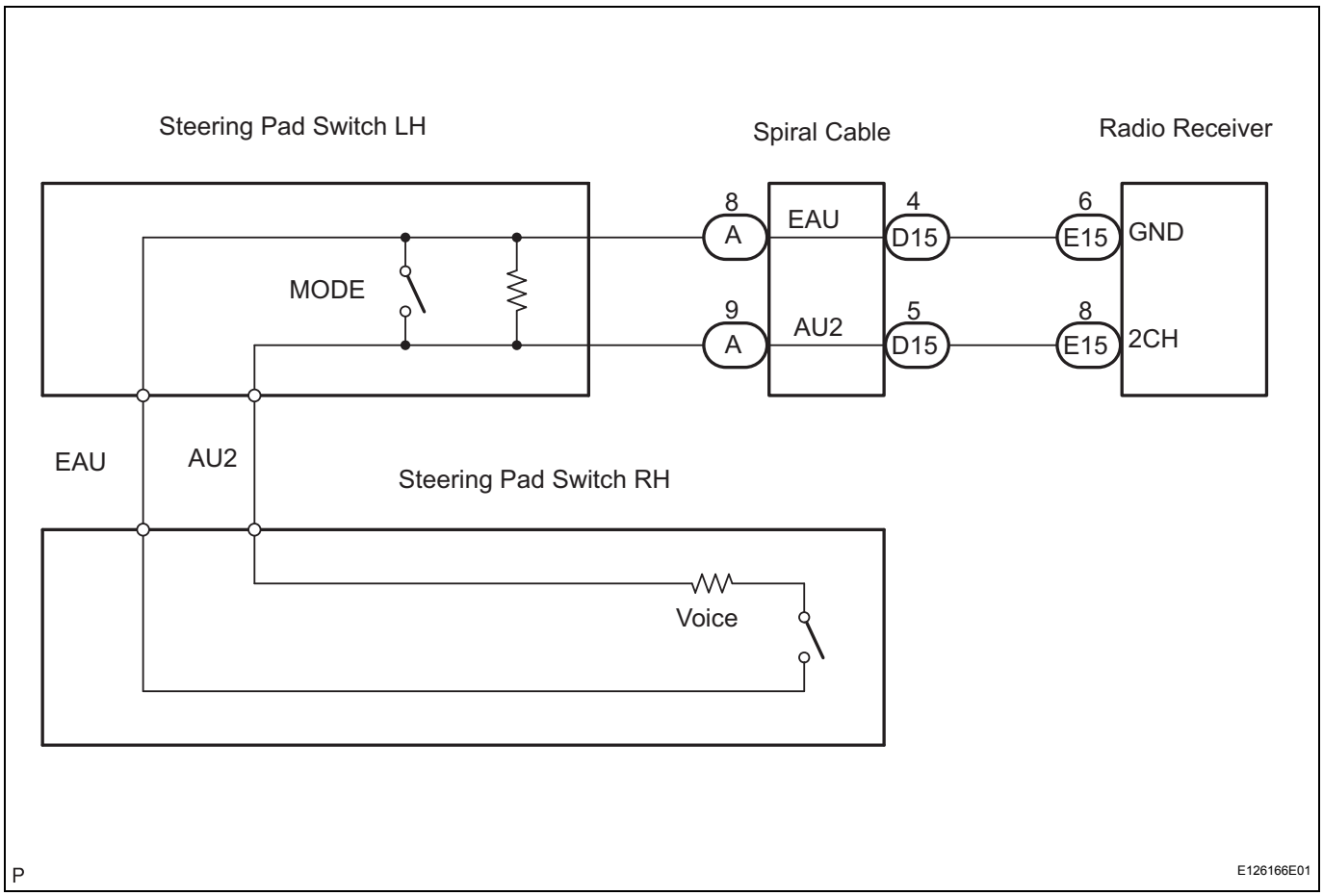

INSPECTION PROCEDURE

NOTICE:

The vehicle is equipped with an SRS (Supplemental Restraint System) such as airbags. Before servicing (including removal or installation of parts), be sure to read the precautionary notice for the Supplemental Restraint System (See page RS-1).

1	INSPECT RADIO RECEIVER

Wire Harness View (12 Speaker):

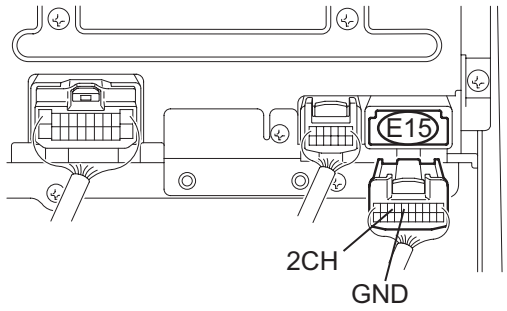

Wire Harness View (9 Speaker):

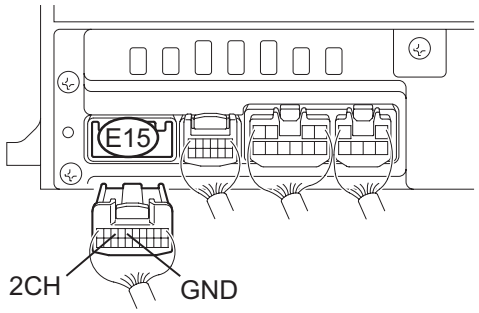

P E126167E01

(a) Disconnect the radio receiver connector E15.
(b) Measure the resistance according to the value(s) in the table below.

Standard resistance

Tester connection	Condition	Specified condition
2CH - GND	No switch is pushed	Approx. 100 kΩ
2CH - GND	VOICE switch: push	Approx. 3.2 kΩ

NG → **Go to step 2**

OK

PROCEED TO NEXT CIRCUIT INSPECTION SHOWN IN PROBLEM SYMPTOMS TABLE

2	INSPECT STEERING PAD SWITCH ASSEMBLY

(a) Disconnect the steering pad switch assembly connector A.

NS

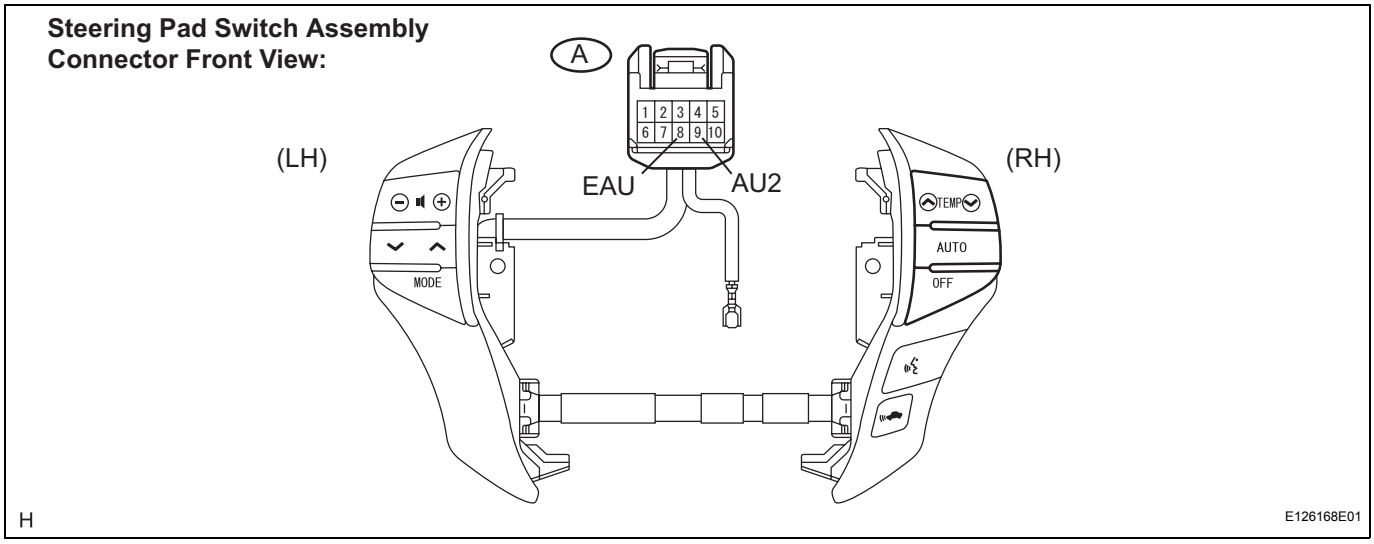

(b) Measure the resistance according to the value(s) in the table below.

Standard resistance

Tester connection	Condition	Specified condition
AU2 - EAU	No switch is pushed	Approx. 100 kΩ
AU2 - EAU	VOICE switch: push	Approx. 3.2 kΩ

NS

NG → **REPLACE STEERING PAD SWITCH ASSEMBLY**

OK

3	INSPECT SPIRAL CABLE

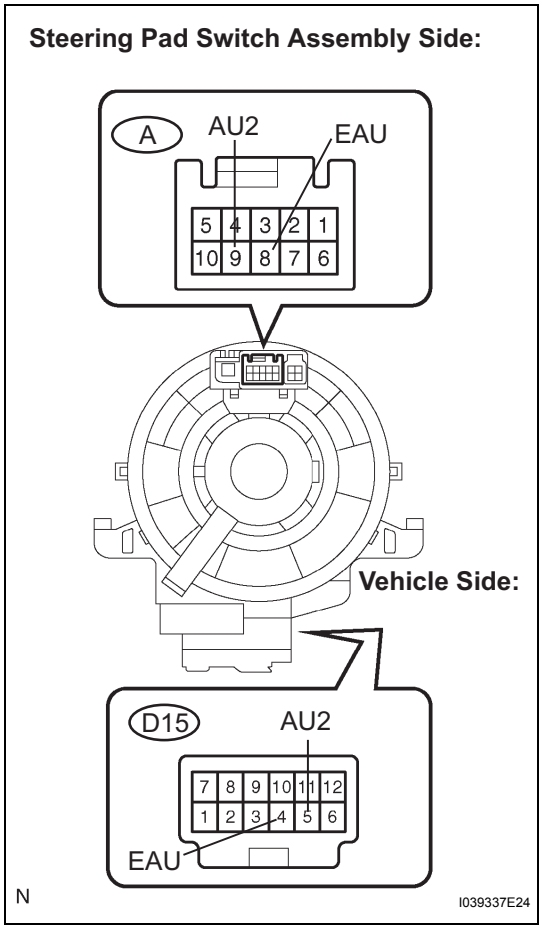

(a) Disconnect the spiral cable connectors.
(b) Measure the resistance according to the value(s) in the table below.

Standard resistance

Tester connection	Condition	Specified condition
EAU - EAU	Always	Below 1 Ω
AU2 - AU2	Always	Below 1 Ω

NG → **REPLACE SPIRAL CABLE**

OK

REPAIR OR REPLACE HARNESS OR CONNECTOR (SPIRAL CABLE - RADIO RECEIVER)

NS

Illumination Circuit

DESCRIPTION

Power is supplied to the multi-display and navigation controller illumination when the light control switch is in the TAIL or HEAD position.

WIRING DIAGRAM

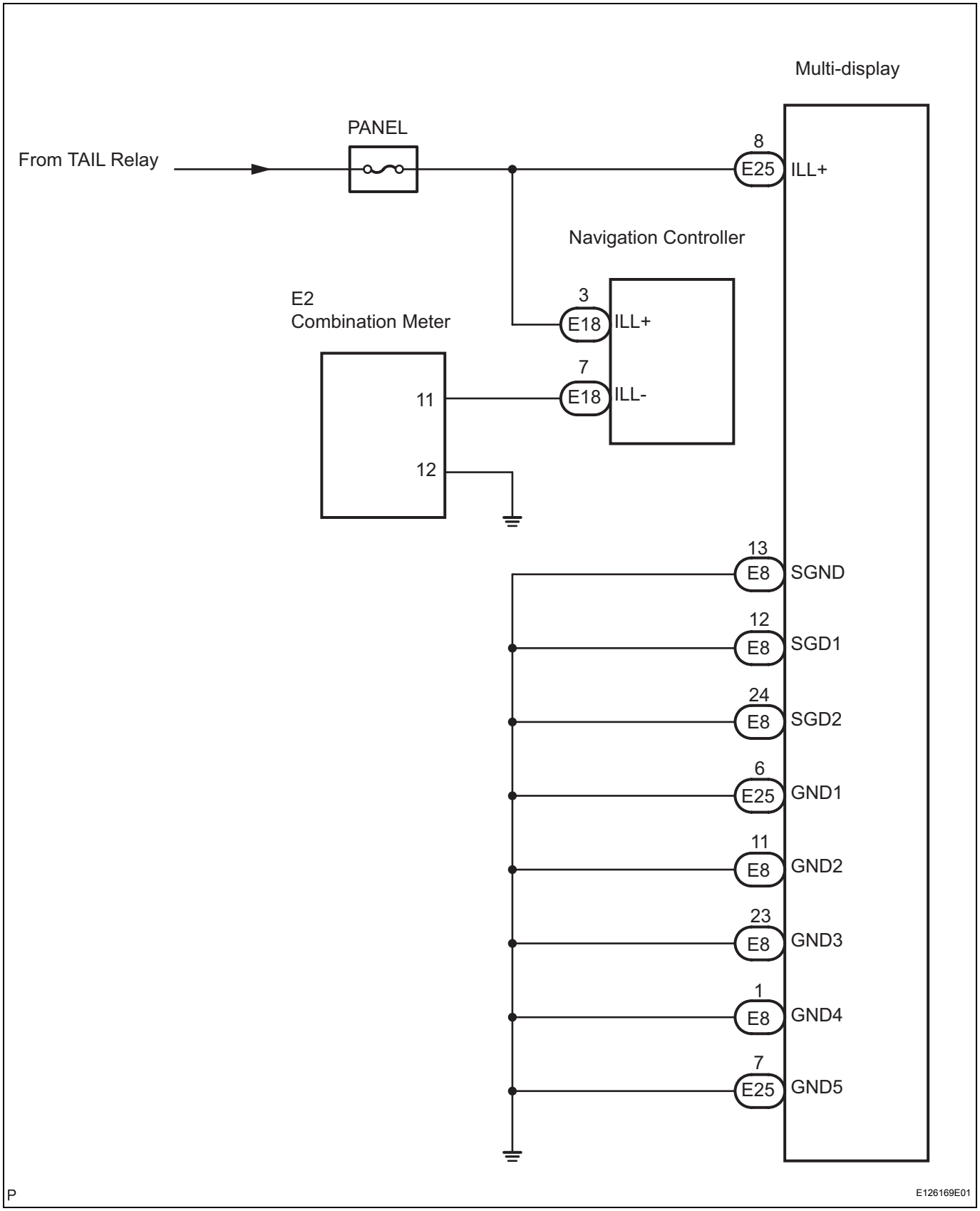

NS

INSPECTION PROCEDURE

1	CHECK ILLUMINATION

(a) Check if the illumination for the multi-display, radio receiver, navigation controller or others (transmission control SW, hazard warning switch, cigarette lighter, etc.) comes on when the light control switch is turned to the HEAD or TAIL position.

Result

Condition	Proceed to
Illumination comes on for components except multi-display	A
Illumination comes on for components except navigation controller	B
No illumination comes on (multi-display, radio receiver, navigation controller, etc.)	C

B → **Go to step 4**

C → **GO TO LIGHTING SYSTEM**

A

2	INSPECT MULTI-DISPLAY

Wire Harness View:

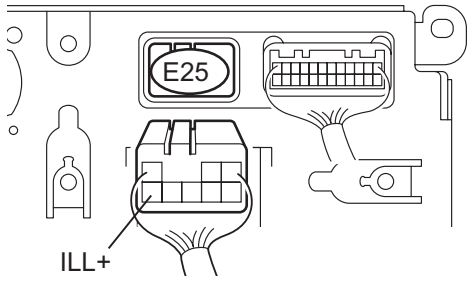

(a) Disconnect the multi-display connector E25.
(b) Measure the voltage according to the value(s) in the table below.

Standard voltage

Tester connection	Condition	Specified condition
ILL+ - Body ground	Light control SW HEAD or TAIL	10 to 14 V

NG → **REPAIR OR REPLACE HARNESS OR CONNECTOR**

OK

3	CHECK HARNESS AND CONNECTOR (MULTI-DISPLAY - BODY GROUND)

Wire Harness View:

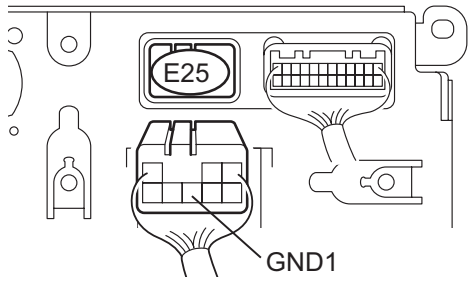

N E126170E02

(a) Disconnect the multi-display connector E25.
(b) Measure the resistance according to the value(s) in the table below.

Standard resistance

Tester connection	Condition	Specified condition
GND1 - Body ground	Always	Below 1 Ω

NG → **REPAIR OR REPLACE HARNESS OR CONNECTOR**

OK

REPLACE MULTI-DISPLAY

4	INSPECT NAVIGATION CONTROLLER

Wire Harness View:

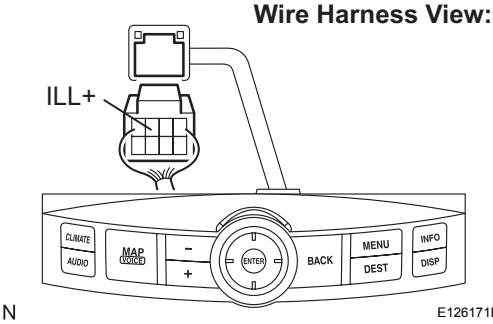

N E126171E02

(a) Disconnect the navigation controller connector E18.
(b) Measure the voltage according to the value(s) in the table below.

Standard voltage

Tester connection	Condition	Specified condition
ILL+ - Body ground	Light control SW HEAD or TAIL	10 to 14 V

NG → **REPAIR OR REPLACE HARNESS OR CONNECTOR**

OK

NS

5	**CHECK HARNESS AND CONNECTOR (NAVIGATION CONTROLLER - COMBINATION METER)**

Navigation Controller Wire Harness View:

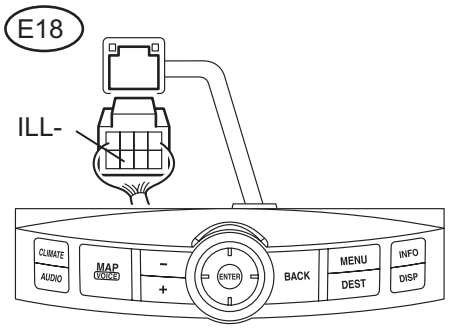

Combination Meter Wire Harness View:

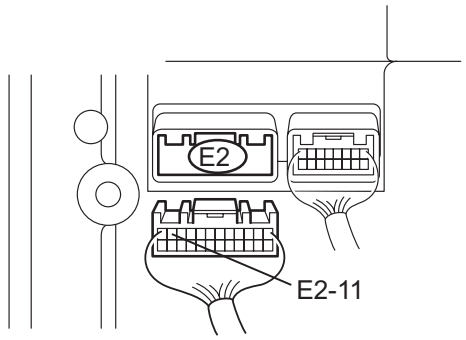

N

E126172E01

(a) Disconnect the combination meter connector E2.
(b) Measure the resistance according to the value(s) in the table below.

Standard resistance

Tester connection	Condition	Specified condition
ILL- - E2-11	Always	Below 1 Ω

NG → **REPAIR OR REPLACE HARNESS OR CONNECTOR**

OK

REPLACE NAVIGATION CONTROLLER

NS

AVC-LAN Circuit

DESCRIPTION

Each unit of the navigation system connected to the AVC-LAN (communication bus) transfers the signal of each switch by communication.
When a short to +B or short to ground occurs in this AVC-LAN, the navigation system will not function normally as the communication is discontinued.

INSPECTION PROCEDURE

1 INSPECT RADIO RECEIVER

Wire Harness View (12 Speaker):

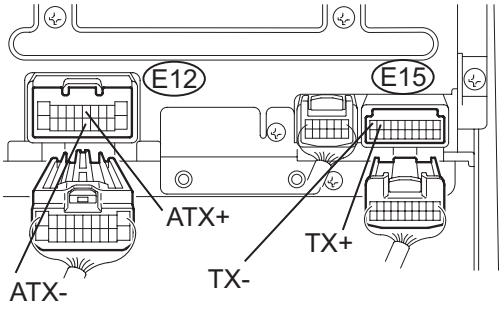

Wire Harness View (9 Speaker):

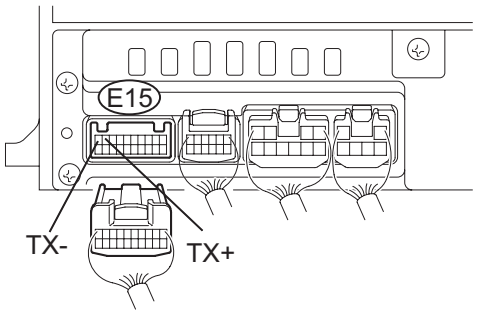

P

E126157E01

(a) Disconnect the radio receiver connectors.
(b) Measure the resistance according to the value(s) in the table below.

Standard resistance

Tester Connection	Condition	Specified Condition
ATX+ (E12-5) - ATX- (E12-15) (*1)	Always	60 to 80 Ω
TX+ (E15-9) - TX- (E15-10)	Always	60 to 80 Ω

*1: for 12 Speaker System

NG → REPLACE RADIO RECEIVER

OK

2 CHECK HARNESS AND CONNECTOR

HINT:
For details of the connectors, refer to "TERMINALS OF ECU" (See page NS-26).

(a) Referring to the AVC-LAN wiring diagram below, check all AVC-LAN circuits.
  (1) Check for an open or short in all AVC-LAN circuits.
    OK:
    There is no open or short circuit.

NS

AVC-LAN WIRING DIAGRAM

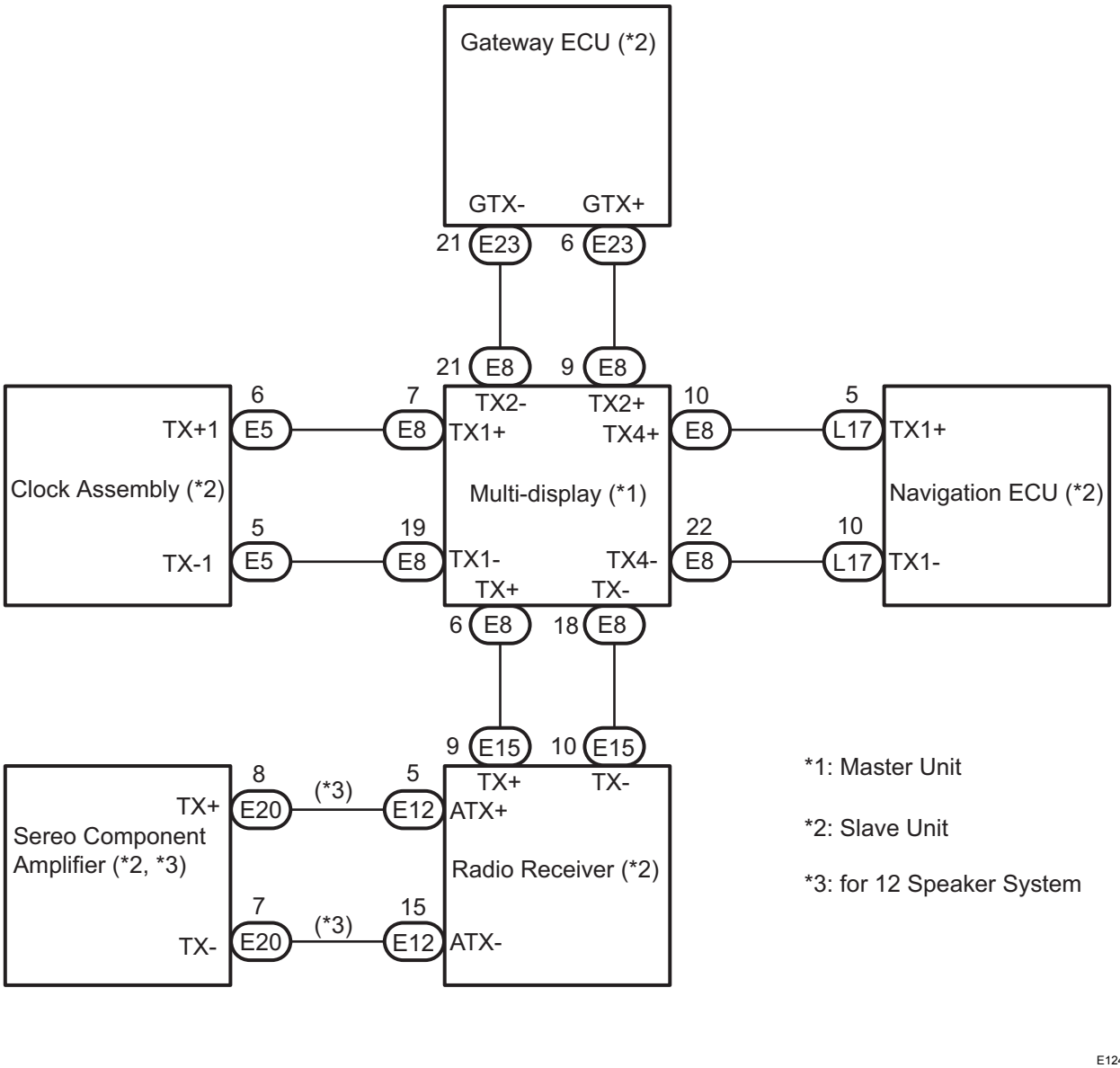

NS

NG → **REPAIR OR REPLACE HARNESS OR CONNECTOR**

OK

PROCEED TO NEXT CIRCUIT INSPECTION SHOWN IN PROBLEM SYMPTOMS TABLE

Vehicle Speed Signal Circuit between Navigation ECU and Combination Meter

DESCRIPTION

The navigation ECU receives a vehicle speed signal from the combination meter and information about the GPS antenna, and then adjusts vehicle position.
HINT:

- A voltage of 12 V or 5 V is output from each ECU and then input to the combination meter. The signal is changed to a pulse signal at the transistor in the combination meter. Each ECU controls the respective system based on the pulse signal.
- If a short occurs in an ECU, all systems in the diagram below will not operate normally.

WIRING DIAGRAM

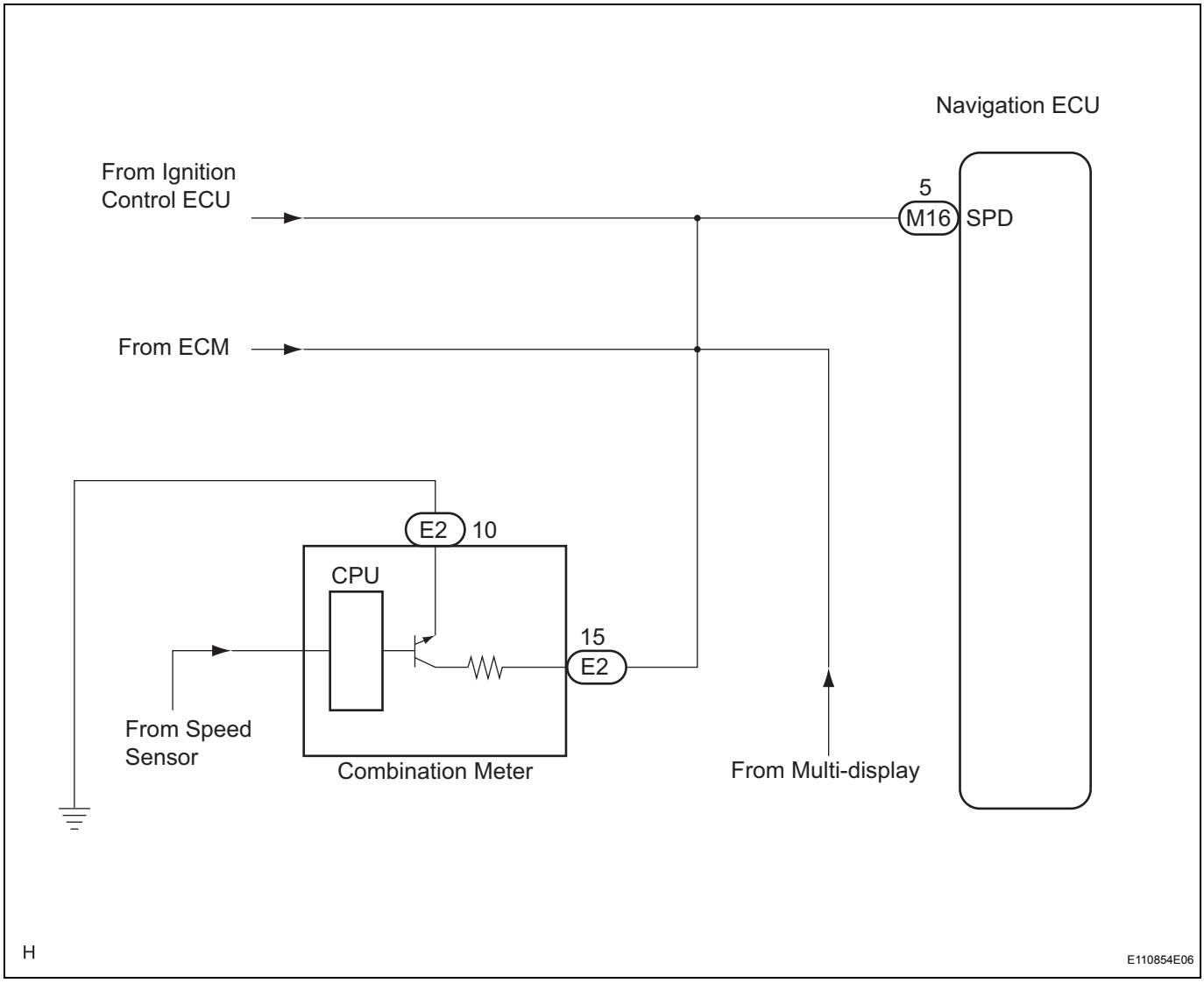

INSPECTION PROCEDURE

1	CHECK SPEEDOMETER

(a) Drive the vehicle and check if the function of the speedometer in the combination meter is normal.
OK:
Actual vehicle speed and the speed indicated on the speedometer are the same.
HINT:
The vehicle speed sensor is functioning normally when the indication on the speedometer is normal.

NG → **GO TO COMBINATION METER SYSTEM**

OK

2	INSPECT NAVIGATION ECU

Wire Harness View:

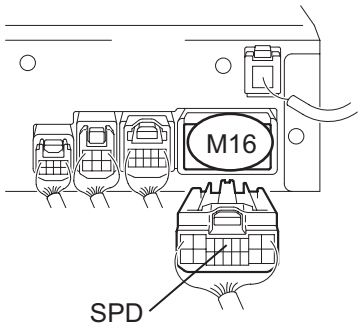

P E126173E01

(a) Disconnect the navigation ECU connector M16.
(b) Measure voltage.
(1) Jack up either one of the drive wheels.
(2) Move the shift lever to the neutral position.
(3) Turn the ignition switch on (IG).

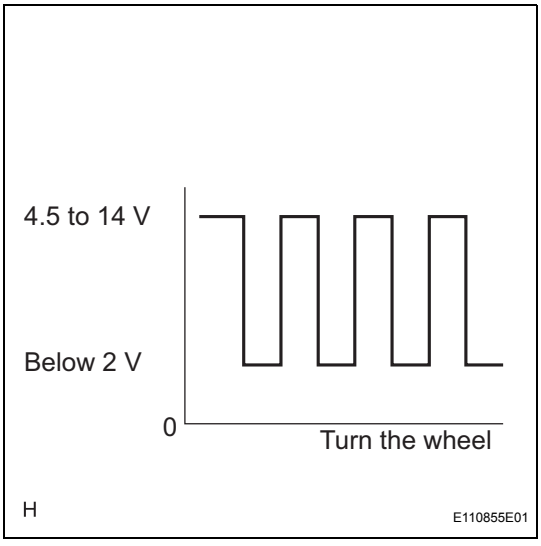

H E110855E01

(4) Measure the voltage between terminal SPD of the navigation ECU and body ground when the drive wheels are turned slowly.
OK:
Voltage pulses as shown in the illustration.

OK → **REPLACE NAVIGATION ECU**

NG

3	CHECK HARNESS AND CONNECTOR (COMBINATION METER - NAVIGATION ECU)

Navigation ECU
Wire Harness View:

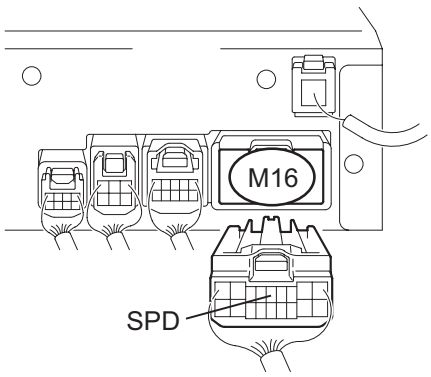

Combination Meter
Wire Harness View:

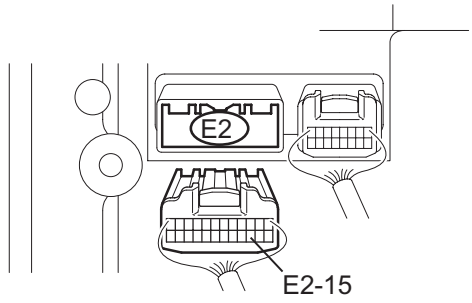

P E126174E01

(a) Disconnect the navigation ECU connector M16 and combination meter connector E2.
(b) Measure the resistance according to the value(s) in the table below.

Standard resistance

Tester connection	Condition	Specified condition
SPD - E2-15	Ignition switch OFF	Below 1 Ω

NG → **REPAIR OR REPLACE HARNESS OR CONNECTOR**

OK

NS

4	CHECK HARNESS AND CONNECTOR (COMBINATION METER - NAVIGATION ECU)

Navigation ECU
Wire Harness View:

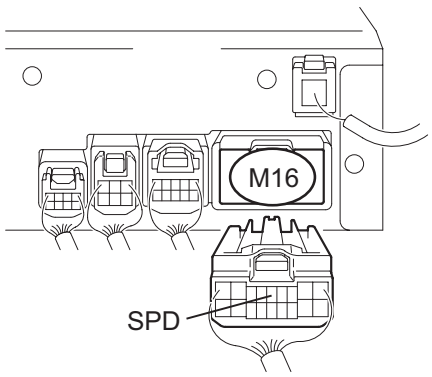

Combination Meter
Wire Harness View:

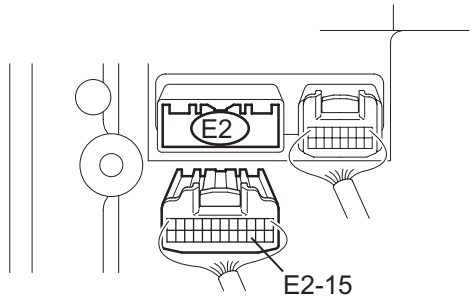

P E126174E01

(a) Disconnect the navigation ECU connector M16 and combination meter connector E2.
(b) Measure the resistance according to the value(s) in the table below.

Standard resistance

Tester connection	Condition	Specified condition
SPD - Body ground	Ignition switch OFF	10 kΩ or higher

HINT:
If the resistance between terminal SPD and body ground is less than 10 kΩ, there may be a short in a wire harness, connector, or ECU.

NG → **REPAIR OR REPLACE HARNESS OR CONNECTOR OR EACH ECU**

OK

REPLACE COMBINATION METER

NS

Vehicle Speed Signal Circuit between Multi-display and Combination Meter

DESCRIPTION

The multi-display performs switch operation control during driving by receiving a vehicle speed signal from the combination meter.
HINT:

- A voltage of 12 V or 5 V is output from each ECU and then input to the combination meter. The signal is changed to a pulse signal at the transistor in the combination meter. Each ECU controls the respective system based on the pulse signal.
- If a short occurs in an ECU, all systems in the diagram below will not operate normally.

WIRING DIAGRAM

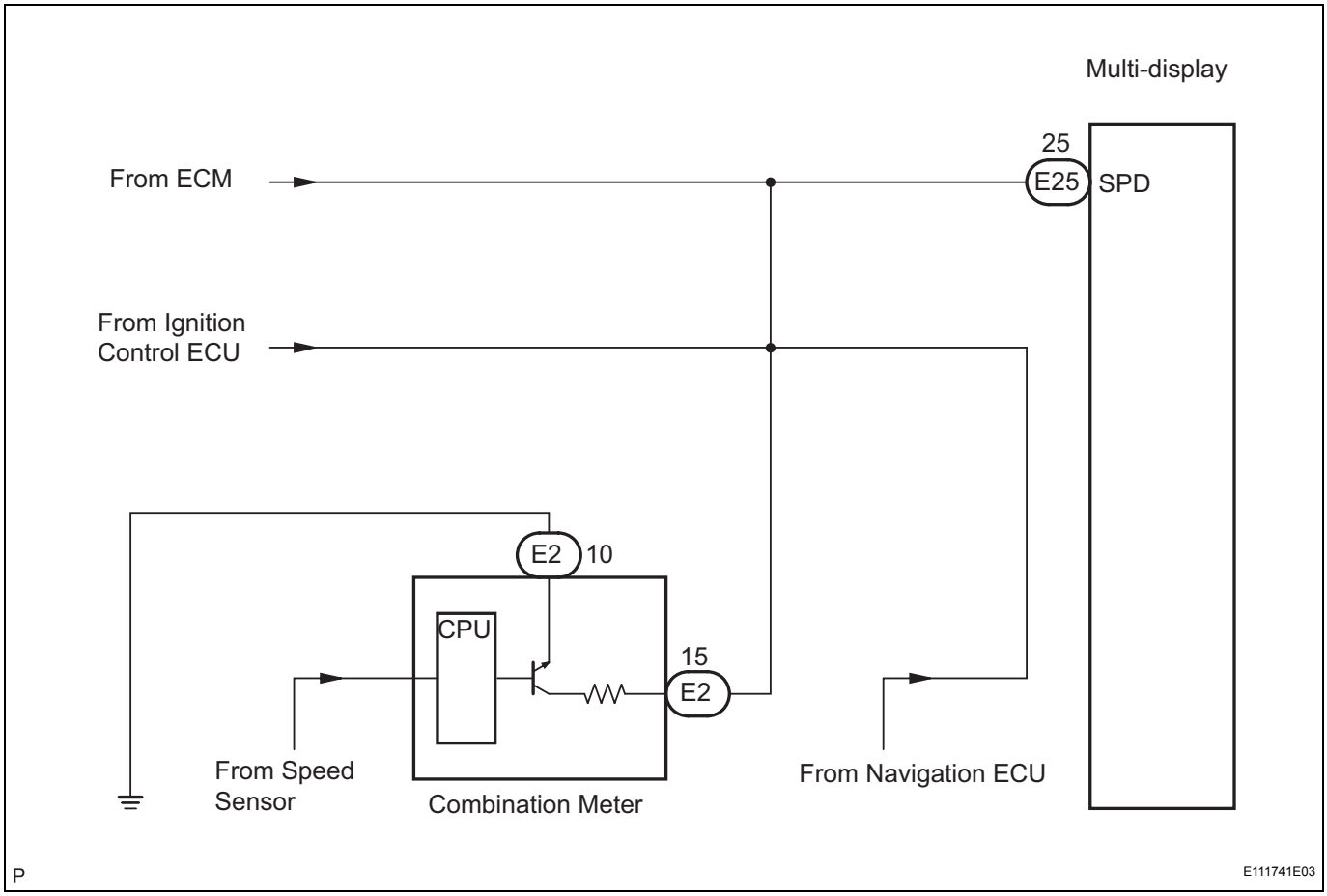

NS

INSPECTION PROCEDURE

1	CHECK SPEEDOMETER

(a) Drive the vehicle and check if the function of the speedometer in the combination meter is normal.
OK:
Actual vehicle speed and the speed indicated on the speedometer are the same.

HINT:
The vehicle speed sensor is functioning normally when the indication on the speedometer is normal.

NG → **GO TO COMBINATION METER SYSTEM**

OK

2	INSPECT MULTI-DISPLAY

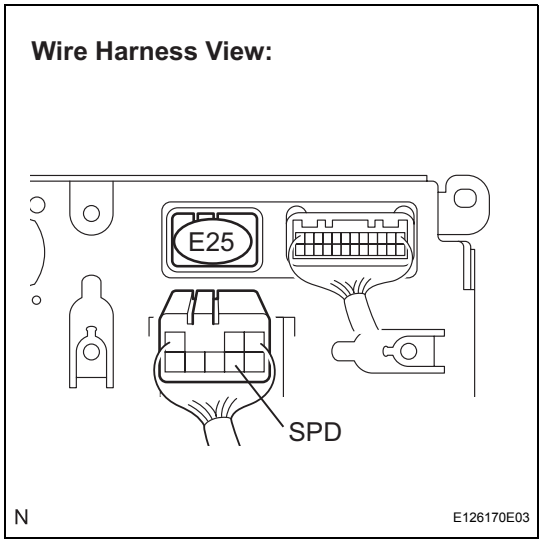

(a) Disconnect the multi-display connector E25.
(b) Measure voltage.
  (1) Jack up either one of the drive wheels.
  (2) Move the shift lever to the neutral position.
  (3) Turn the ignition switch on (IG).

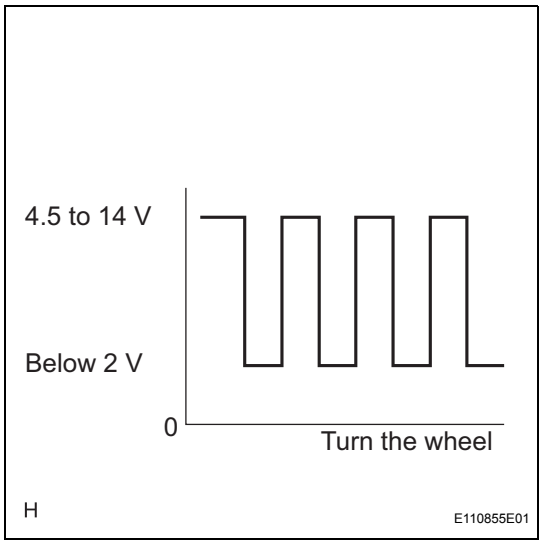

(4) Measure the voltage between terminal SPD of the multi-display and body ground when the drive wheels are turned slowly.
OK:
Voltage pulses as shown in the illustration.

OK → **REPLACE MULTI-DISPLAY**

NG

NS

3	CHECK HARNESS AND CONNECTOR (COMBINATION METER - MULTI-DISPLAY)

Multi-display Wire Harness View:

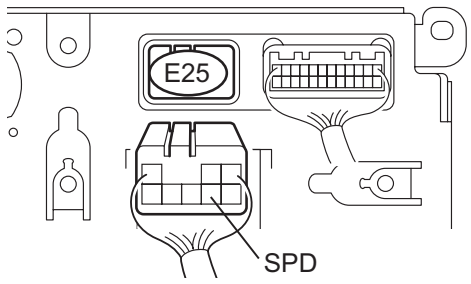

Combination Meter Wire Harness View:

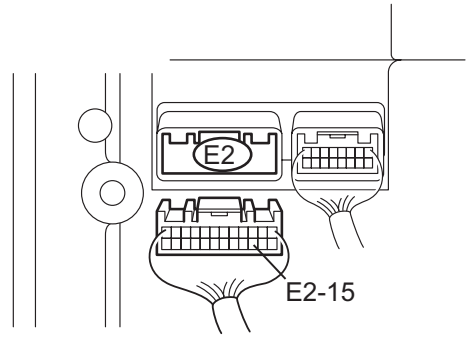

N

E126175E01

(a) Disconnect the multi-display connector E25 and combination meter connector E2.

(b) Measure the resistance according to the value(s) in the table below.

Standard resistance

Tester connection	Condition	Specified condition
SPD - E2-15	Ignition switch OFF	Below 1 Ω

NG → **REPAIR OR REPLACE HARNESS OR CONNECTOR**

OK

NS

4	CHECK HARNESS AND CONNECTOR (COMBINATION METER - MULTI-DISPLAY)

Multi-display Wire Harness View:

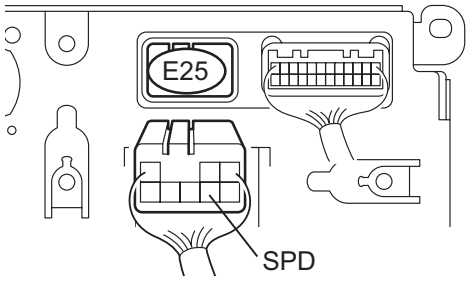

Combination Meter Wire Harness View:

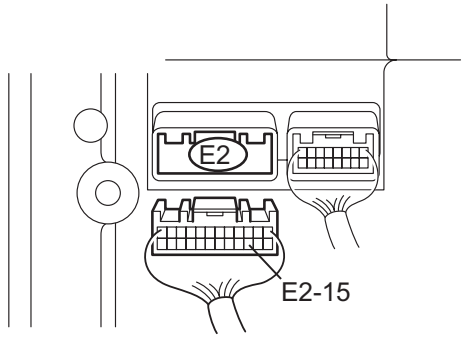

N

E126175E01

(a) Disconnect the multi-display connector E25 and combination meter connector E2.
(b) Measure the resistance according to the value(s) in the table below.

Standard resistance

Tester connection	Condition	Specified condition
SPD - Body ground	Ignition switch OFF	10 kΩ or higher

HINT:
If the resistance between terminal SPD and body ground is less than 10 kΩ, there may be a short in a wire harness, connector, or ECU.

NG → **REPAIR OR REPLACE HARNESS OR CONNECTOR OR EACH ECU**

OK

REPLACE COMBINATION METER

NS

Reverse Signal Circuit

DESCRIPTION

The navigation ECU receives a reverse signal from the park / neutral position switch and information about the GPS antenna, and then adjusts vehicle position.

WIRING DIAGRAM

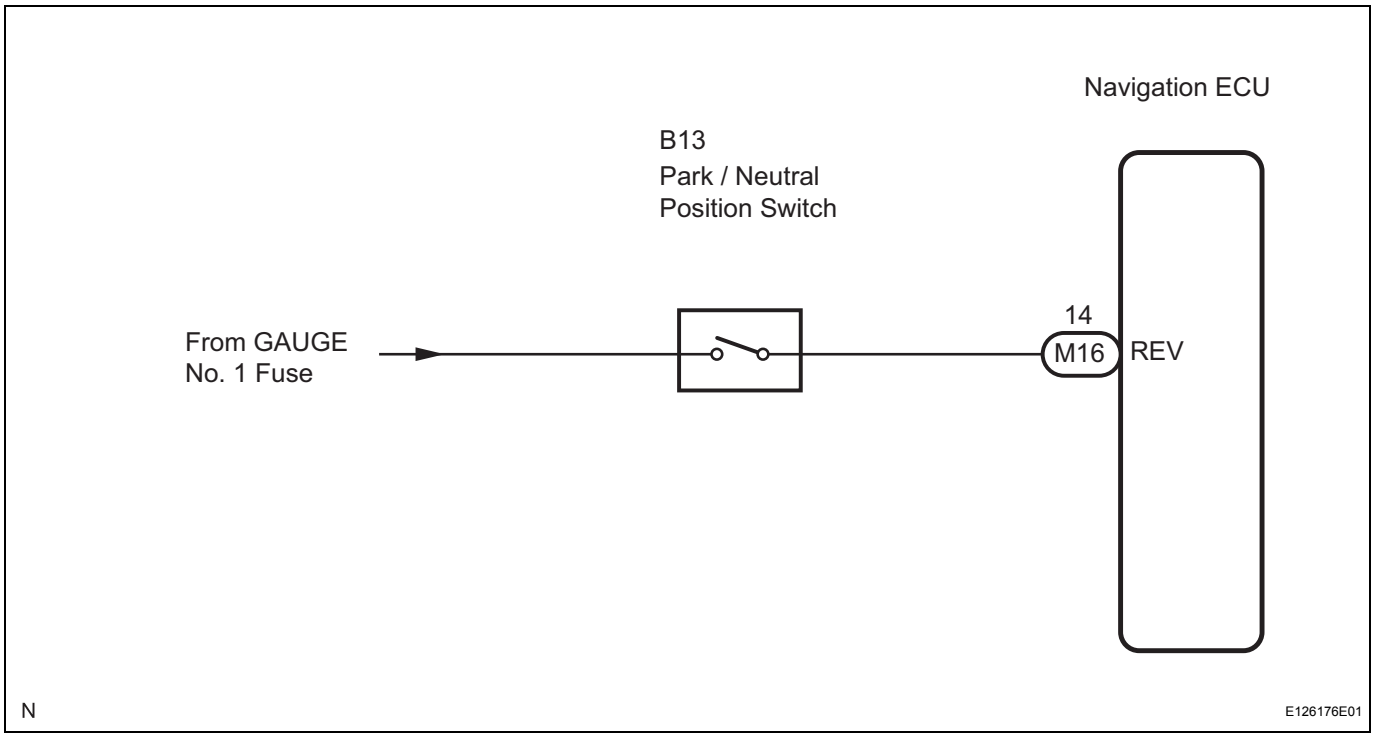

INSPECTION PROCEDURE

1	INSPECT NAVIGATION ECU

Wire Harness View:

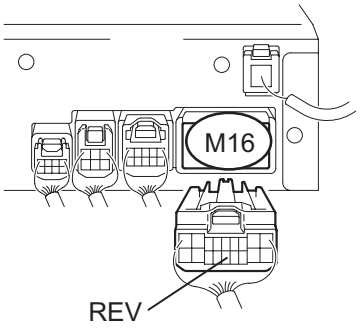

(a) Disconnect the navigation ECU connector M16.
(b) Measure the voltage according to the value(s) in the table below.

Standard voltage

Tester connection	Condition	Specified condition
REV - Body ground	Ignition switch is on (IG). Shift lever is moved to R position.	10 to 14 V
REV - Body ground	Ignition switch is on (IG). Shift lever is moved to any position except R.	Below 1 V

OK → REPLACE NAVIGATION ECU

NG

2	CHECK HARNESS AND CONNECTOR (NAVIGATION ECU - PARK / NEUTRAL POSITION SWITCH)

Navigation ECU
Wire Harness View:

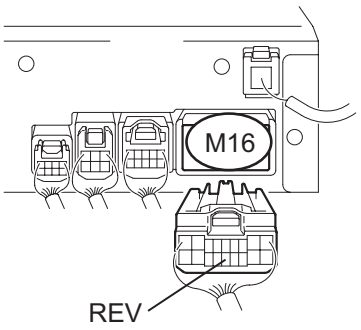

Park / Neutral Position Switch
Connector Front View:

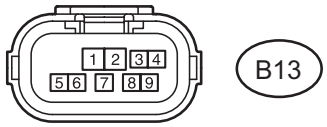

P E126177E01

(a) Disconnect the navigation ECU connector M16 and park / neutral position switch connector B13.
(b) Measure the resistance according to the value(s) in the table below.

Standard resistance

Tester connection	Condition	Specified condition
REV - B13-1	Always	Below 1 Ω
REV - Body ground	Always	10 kΩ or higher

NG → **REPAIR OR REPLACE HARNESS OR CONNECTOR**

OK

3	INSPECT PARK / NEUTRAL POSITION SWITCH

Park / Neutral Position Switch:

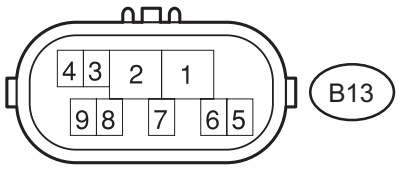

P E126178E01

(a) Disconnect the park / neutral position switch connector B13.
(b) Measure the resistance according to the value(s) in the table below.

Standard resistance

Tester connection	Condition	Specified condition
B13-1 - B13-2	Shift lever is moved to R position.	Below 1 Ω
B13-1 - B13-2	Shift lever is moved to any position except R.	10 kΩ or higher

NG → **REPLACE PARK / NEUTRAL POSITION SWITCH**

NS

OK

REPAIR OR REPLACE HARNESS OR CONNECTOR

Navigation Voice Speaker Circuit

DESCRIPTION

This circuit is used when the voice guidance in the navigation system is on.

WIRING DIAGRAM

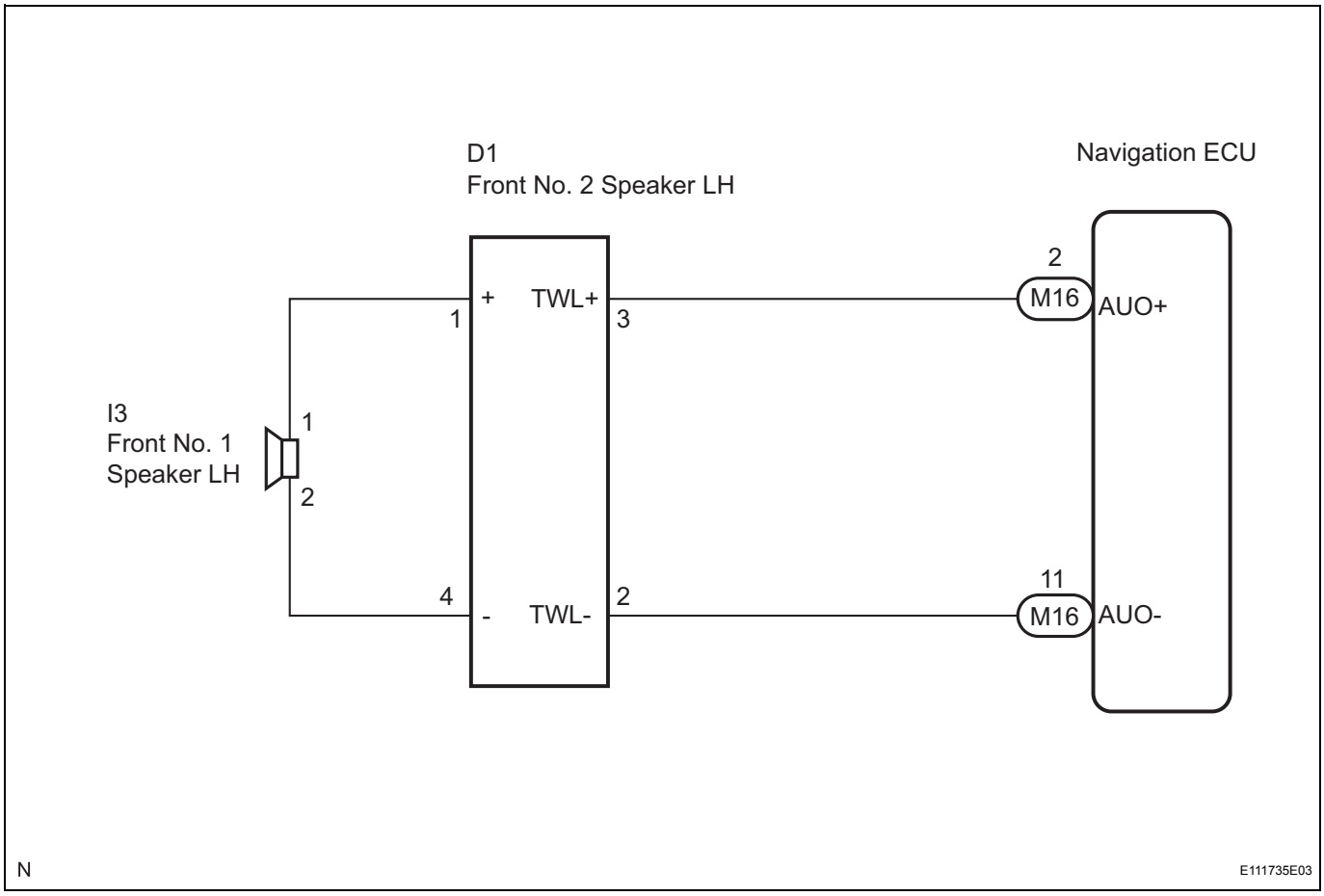

INSPECTION PROCEDURE

1	CHECK HARNESS AND CONNECTOR (NAVIGATION ECU - FRONT NO. 2 SPEAKER)

Navigation ECU
Wire Harness View:

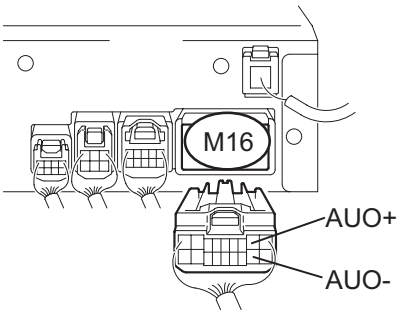

Front No. 2 Speaker
Connector Front View:

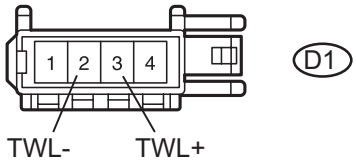

P E126179E01

(a) Disconnect the navigation ECU connector M16 and front No. 2 speaker connector D1.
(b) Measure the resistance according to the value(s) in the table below.

Standard resistance

Tester connection	Condition	Specified condition
TWL+ - AUO+	Always	Below 1 Ω
TWL- - AUO-	Always	Below 1 Ω
AUO+ - Body ground	Always	10 kΩ or higher
AUO- - Body ground	Always	10 kΩ or higher

NG → **REPAIR OR REPLACE HARNESS OR CONNECTOR**

OK

2	INSPECT FRONT NO. 2 SPEAKER

(a) Check that the malfunction disappears when another speaker in good condition is installed.

OK:

Malfunction disappears.

HINT:

- Connect all the connectors to the speakers.
- When there is a possibility that either the right or left front speaker is defective, inspect by interchanging the right one with the left one.

OK → **REPLACE FRONT NO. 2 SPEAKER**

NG

3	CHECK HARNESS AND CONNECTOR (FRONT NO. 1 SPEAKER - FRONT NO. 2 SPEAKER)

Front No. 2 Speaker Connector Front View:

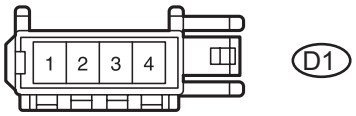

Front No. 1 Speaker Connector Front View:

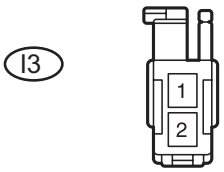

P E126180E01

(a) Disconnect the front No. 1 speaker connector I3.
(b) Measure the resistance according to the value(s) in the table below.

Standard resistance

Tester connection	Condition	Specified condition
D1-4 - I3-1	Always	Below 1 Ω
D1-1 - I3-2	Always	Below 1 Ω
D1-4 - Body ground	Always	10 kΩ or higher
D1-1 - Body ground	Always	10 kΩ or higher

NG → **REPAIR OR REPLACE HARNESS OR CONNECTOR**

OK

4	INSPECT FRONT NO. 1 SPEAKER

(a) Resistance check
(1) Measure the resistance between the terminals of the speaker.

Standard resistance:
1.8 to 2.6 Ω

NG → **REPLACE FRONT NO. 1 SPEAKER**

OK

PROCEED TO NEXT CIRCUIT INSPECTION SHOWN IN PROBLEM SYMPTOMS TABLE

NS

Display Signal Circuit between Navigation ECU and Multi-display

DESCRIPTION

This is the display signal circuit from the navigation ECU to the multi-display.

WIRING DIAGRAM

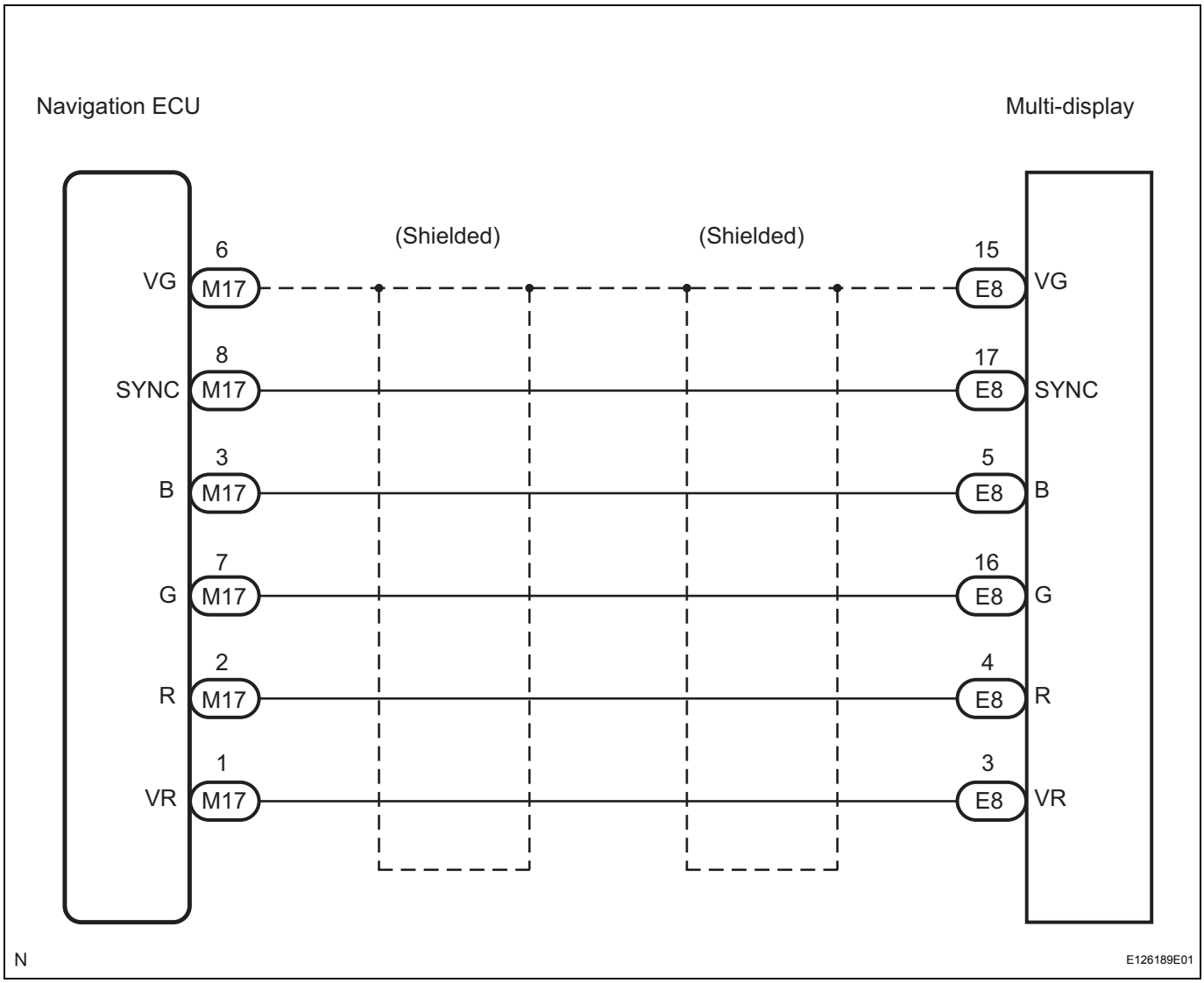

INSPECTION PROCEDURE

1 CHECK HARNESS AND CONNECTOR (NAVIGATION ECU - MULTI-DISPLAY)

Navigation ECU Wire Harness View:

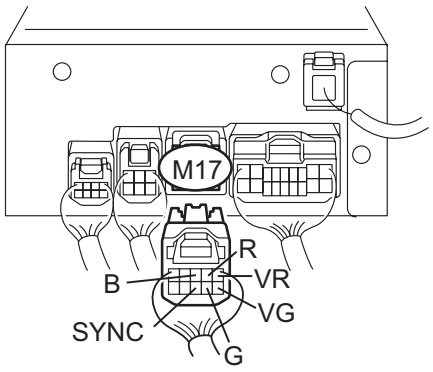

Multi-display Wire Harness View:

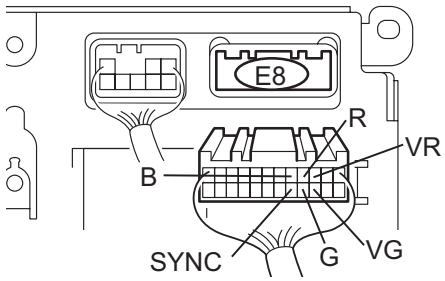

N

E126182E01

(a) Disconnect the navigation ECU connector M17 and multi-display connector E8.
(b) Measure the resistance according to the value(s) in the table below.

Standard resistance

Tester connection	Condition	Specified condition
R - R	Always	Below 1 Ω
G - G	Always	Below 1 Ω
B - B	Always	Below 1 Ω
SYNC - SYNC	Always	Below 1 Ω
VR - VR	Always	Below 1 Ω
VG - VG	Always	Below 1 Ω
R - Body ground	Always	10 kΩ or higher
G - Body ground	Always	10 kΩ or higher
B - Body ground	Always	10 kΩ or higher
SYNC - Body ground	Always	10 kΩ or higher
VR - Body ground	Always	10 kΩ or higher
VG - Body ground	Always	10 kΩ or higher

NG → **REPAIR OR REPLACE HARNESS OR CONNECTOR**

OK

2 INSPECT NAVIGATION ECU (OUTPUT SIGNAL)

Multi-display Wire Harness View:

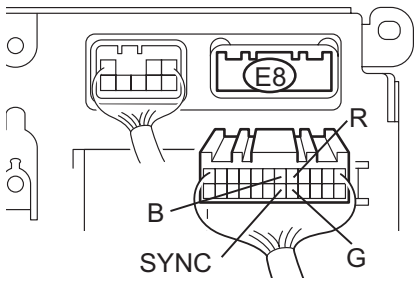

N

E126183E01

(a) Reconnect the navigation ECU connector M17.
(b) Measure the waveform according to the table below.

Standard

Tester connection	Condition	Specified condition
R - Body ground	Navigation display is ON.	A waveform synchronized with display signals is output.
G - Body ground	Navigation display is ON.	A waveform synchronized with display signals is output.
B - Body ground	Navigation display is ON.	A waveform synchronized with display signals is output.
SYNC - Body ground	Navigation display is ON.	A waveform synchronized with display signals is output.

HINT:

- If SYNC signals are not being input to the multi-display due to an open circuit or other causes, the green initial screen may seem pinkish-green.
- The waveform pattern may differ from those shown in the illustrations below due to differences in oscilloscope settings. A normal navigation ECU operating condition can be determined if any waveform is output.

(1) Oscilloscope wave

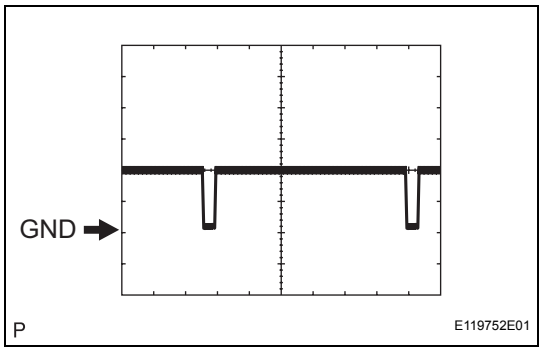

Terminals	SYNC - Body ground
Setting	500 mV/DIV 10 sμ/DIV
Condition	Navigation display is on.

(2) Oscilloscope wave

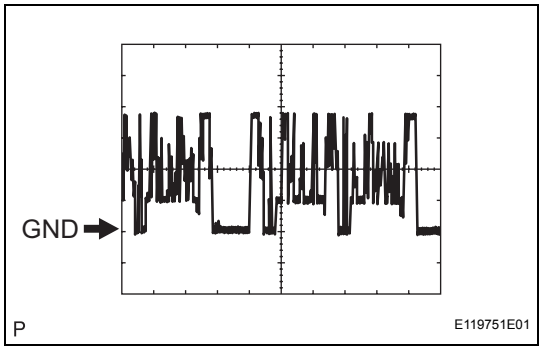

Terminals	R, G, B - Body ground
Setting	200 mV/DIV 10 sμ/DIV
Condition	Navigation display is on.

NS

NG → **REPLACE NAVIGATION ECU**

OK

PROCEED TO NEXT CIRCUIT INSPECTION SHOWN IN PROBLEM SYMPTOMS TABLE

Switch Signal Circuit between Multi-display and Navigation Controller

DESCRIPTION

This circuit is from navigation controller to the multi-display.
This is a communication circuit. If an open or short occurs, navigation control will be impossible.

WIRING DIAGRAM

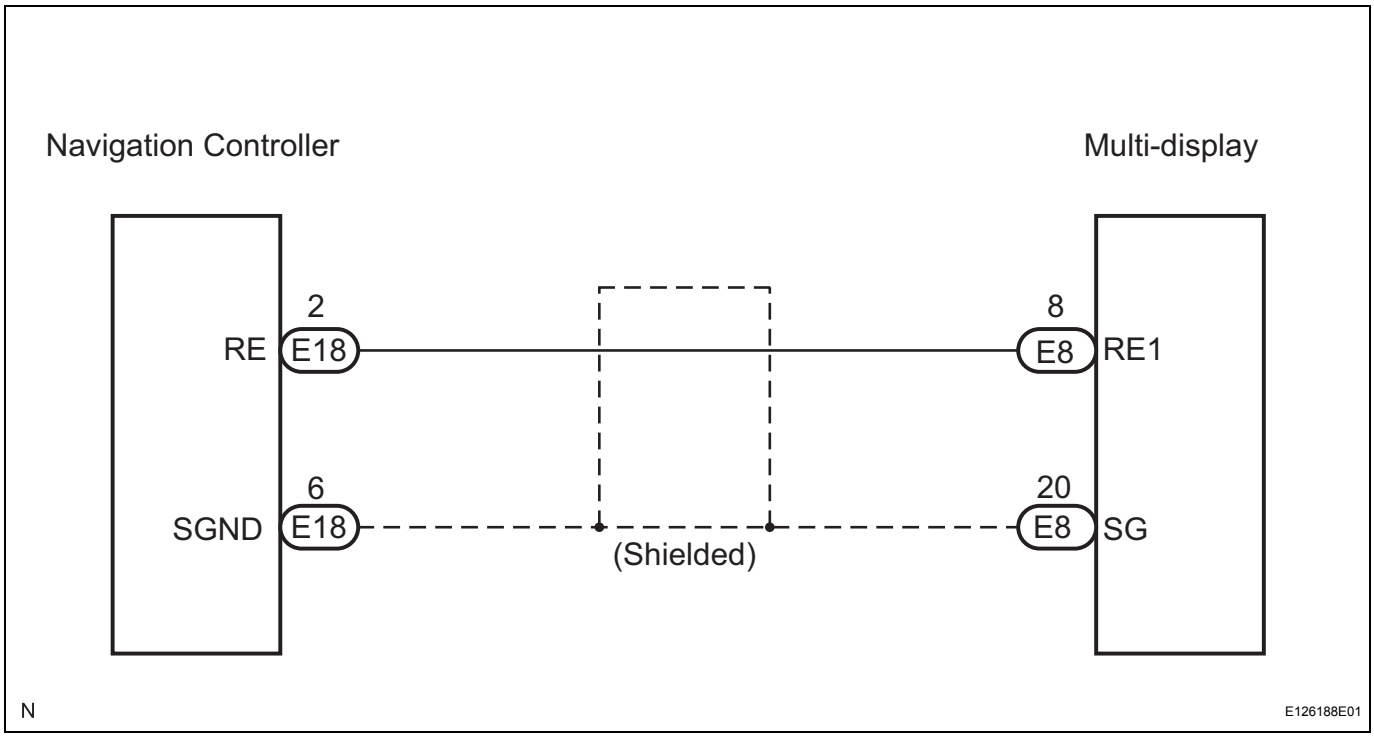

INSPECTION PROCEDURE

1	CHECK HARNESS AND CONNECTOR (NAVIGATION CONTROLLER - MULTI-DISPLAY)

Multi-display Wire Harness View:

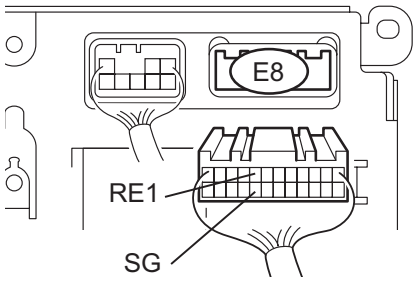

Navigation Controller Wire Harness View:

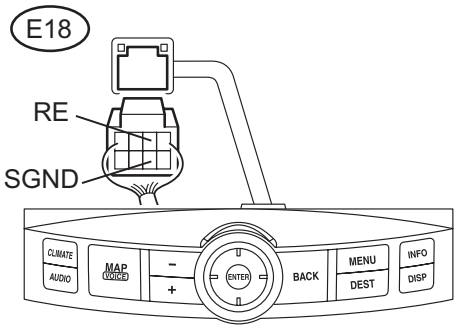

N E126181E01

(a) Disconnect the multi-display connector E8 and navigation controller connector E18.
(b) Measure the resistance according to the value(s) in the table below.

Standard resistance

Tester connection	Condition	Specified condition
RE1 - RE	Always	Below 1 Ω
SG - SGND	Always	Below 1 Ω
RE1 - Body ground	Always	10 kΩ or higher
SGND - Body ground	Always	10 kΩ or higher

NG → **REPAIR OR REPLACE HARNESS OR CONNECTOR**

OK

PROCEED TO NEXT CIRCUIT INSPECTION SHOWN IN PROBLEM SYMPTOMS TABLE

NS

Microphone Circuit between Overhead J/B and Navigation ECU

DESCRIPTION

This circuit sends a microphone signal from the overhead J/B to the navigation ECU. It also supplies power from the navigation ECU to the overhead J/B.

WIRING DIAGRAM

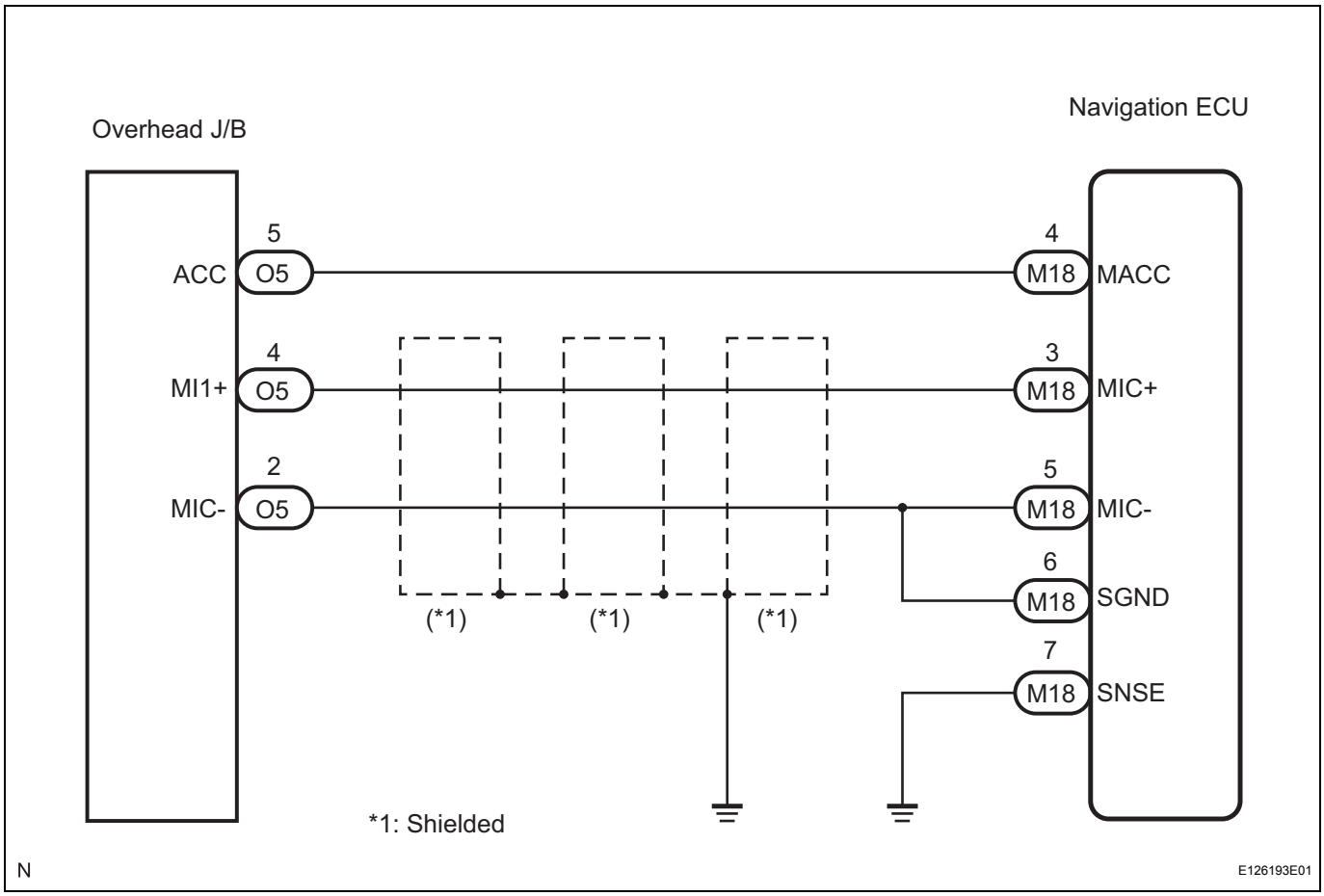

INSPECTION PROCEDURE

1 INSPECT NAVIGATION ECU

Wire Harness View:

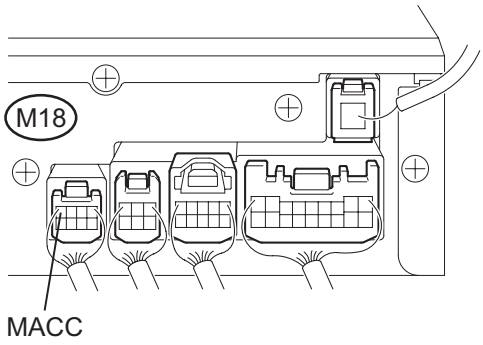

(a) Measure the voltage according to the value(s) in the table below.

Standard voltage

Tester connection	Condition	Specified condition
MACC - Body ground	Ignition switch on (ACC)	4 to 6 V

NG → **REPLACE NAVIGATION ECU**

OK

2 CHECK HARNESS AND CONNECTOR (NAVIGATION ECU - BODY GROUND)

Wire Harness View:

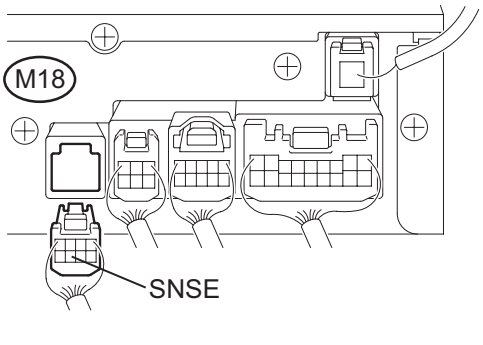

(a) Disconnect the navigation ECU connector M18.
(b) Measure the resistance according to the value(s) in the table below.

Standard resistance

Tester connection	Condition	Specified condition
SNSE - Body ground	Always	Below 1 Ω

NG → **REPAIR OR REPLACE HARNESS OR CONNECTOR**

OK

NS

3	CHECK HARNESS AND CONNECTOR (OVERHEAD J/B - NAVIGATION ECU)

Overhead J/B Connector Front View:

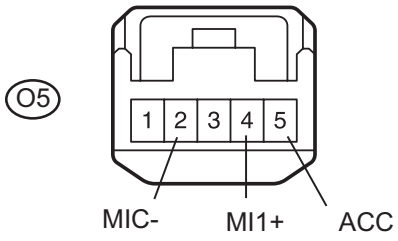

Navigation ECU Wire Harness View:

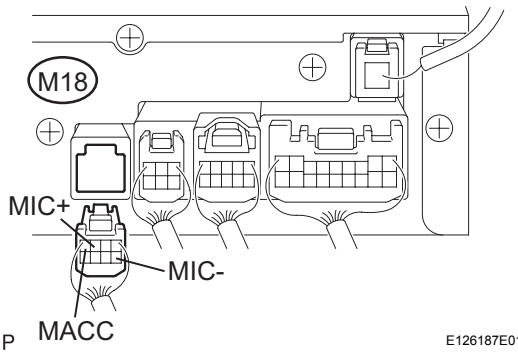

(a) Disconnect the overhead J/B connector O5 and navigation ECU connector M18.
(b) Measure the resistance according to the value(s) in the table below.

Standard resistance

Tester connection	Condition	Specified condition
MACC - ACC	Always	Below 1 Ω
MIC+ - MI1+	Always	Below 1 Ω
MIC- - MIC-	Always	Below 1 Ω
MACC - Body ground	Always	10 kΩ or higher
MIC+ - Body ground	Always	10 kΩ or higher
MIC- - Body ground	Always	10 kΩ or higher

NG → **REPAIR OR REPLACE HARNESS OR CONNECTOR**

OK

PROCEED TO NEXT CIRCUIT INSPECTION SHOWN IN PROBLEM SYMPTOMS TABLE

NS

Gateway ECU Communication Error

INSPECTION PROCEDURE

1 IDENTIFY THE COMPONENT SHOWN BY SUB-CODE

Example:

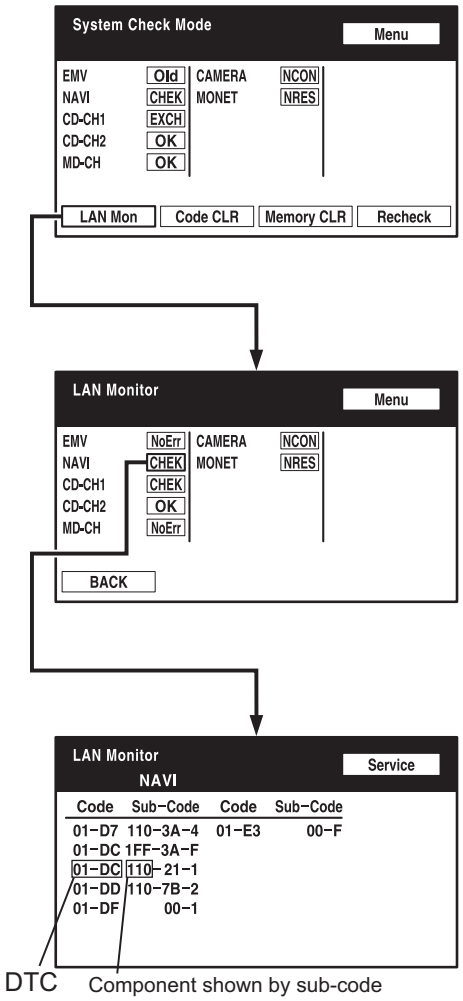

(a) Enter the diagnostic mode.
(b) Press the "LAN Mon" switch to change to "LAN Monitor" mode.
(c) Identify the component shown by the sub-code.
HINT:
- "110 (multi-display)" is the component shown by the sub-code in the example shown in the illustration.
- The sub-code will be indicated by its physical address.

NEXT

2 CHECK POWER SOURCE CIRCUIT OF COMPONENT SHOWN BY SUB-CODE

(a) Inspect the power source circuit of the component shown by the sub-code.
If the power source circuit is operating normally, proceed to the next step.

Component Table:

Component	Proceed to
Radio receiver (190)	Radio receiver power source circuit (See page AV-147)
Stereo component amplifier (440)	Stereo component amplifier power source circuit (See page AV-149)

Component	Proceed to
Multi-display (110)	Multi-display power source circuit (See page NS-161)
Navigation ECU (178)	Navigation ECU power source circuit (See page NS-164)
Clock assembly (1D6)	Clock power source circuit (See page NS-168)

NEXT

3 INSPECT RADIO RECEIVER

Wire Harness View (12 Speaker):

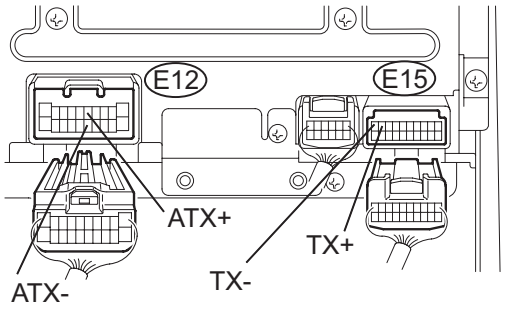

Wire Harness View (9 Speaker):

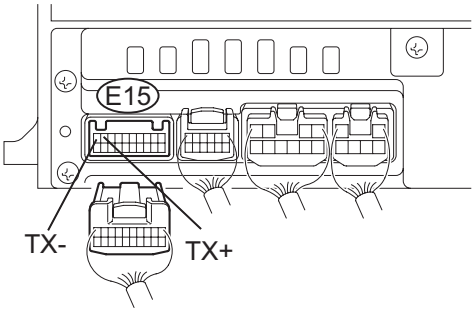

P

E126157E01

(a) Disconnect the radio receiver connectors.
(b) Measure the resistance according to the value(s) in the table below.

Standard resistance

Tester Connection	Condition	Specified Condition
ATX+ (E12-5) - ATX- (E12-15) (*1)	Always	60 to 80 Ω
TX+ (E15-9) - TX- (E15-10)	Always	60 to 80 Ω

*1: for 12 Speaker System

NG → REPLACE RADIO RECEIVER

OK

4 CHECK HARNESS AND CONNECTOR (GATEWAY ECU - COMPONENT SHOWN BY SUB-CODE)

HINT:
- Start the check from the circuit that is near the component shown by the sub-code first.
- For details of the connectors, refer to "TERMINALS OF ECU" (See page NS-26).

(a) Referring to the AVC-LAN wiring diagram below, check the AVC-LAN circuit between the gateway ECU and the component shown by the sub-code.
  (1) Disconnect all connectors between the gateway ECU and the component shown by sub-code.

(2) Check for an open or short in the AVC-LAN circuit between the gateway ECU and the component shown by the sub-code.
OK:
There is no open or short circuit.

AVC-LAN WIRING DIAGRAM

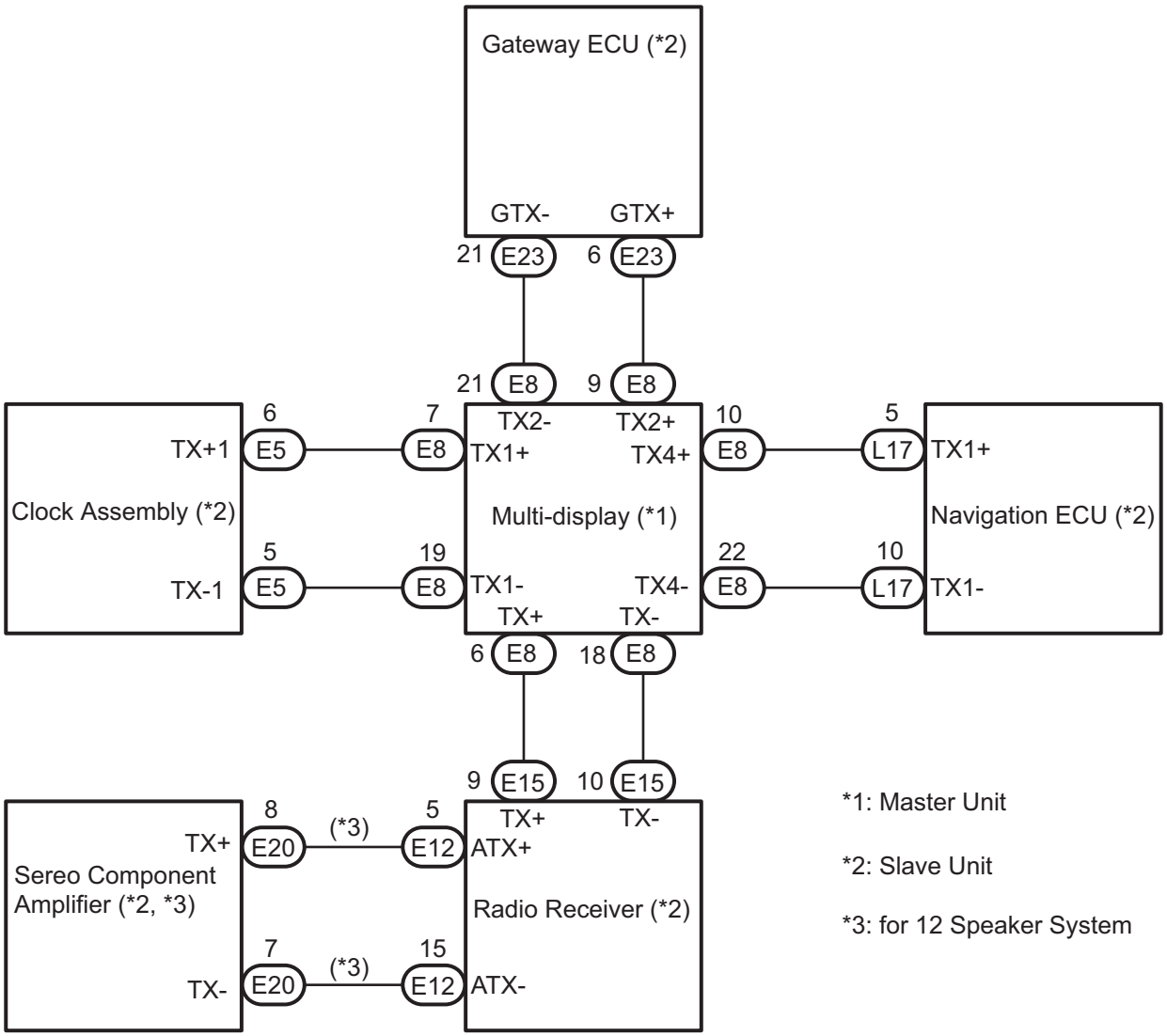

NG → **REPAIR OR REPLACE HARNESS OR CONNECTOR**

OK

5	REPLACE COMPONENT SHOWN BY SUB-CODE

(a) Replace the component shown by the sub-code with a normal one and check if the same problem occurs again.

OK:
Same problem does not occur.

NG → **REPLACE GATEWAY ECU**

OK

END

Radio Receiver Communication Error

INSPECTION PROCEDURE

1 IDENTIFY THE COMPONENT SHOWN BY SUB-CODE

Example:

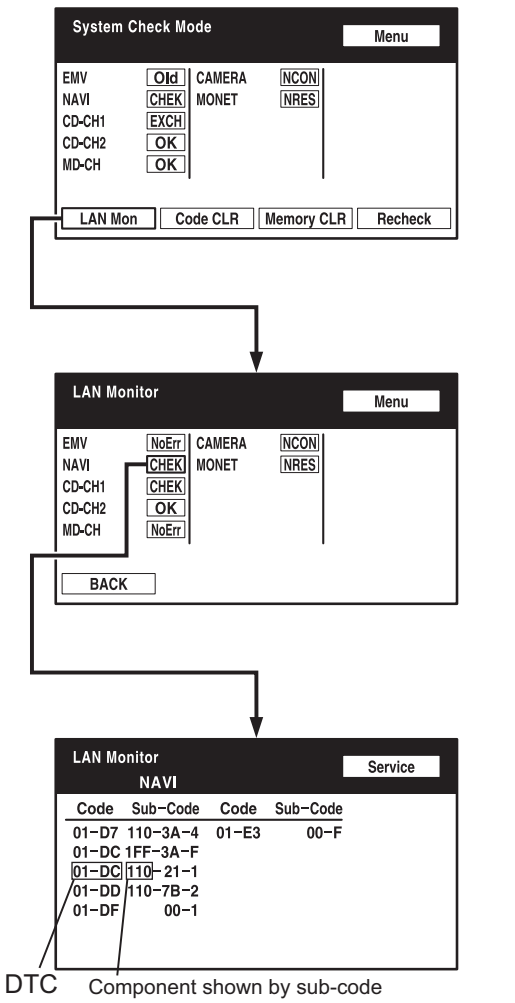

(a) Enter the diagnostic mode.
(b) Press the "LAN Mon" switch to change to "LAN Monitor" mode.
(c) Identify the component shown by the sub-code.
HINT:
- "110 (multi-display)" is the component shown by the sub-code in the example shown in the illustration.
- The sub-code will be indicated by its physical address.

NEXT

2 CHECK POWER SOURCE CIRCUIT OF COMPONENT SHOWN BY SUB-CODE

(a) Inspect the power source circuit of the component shown by the sub-code.
If the power source circuit is operating normally, proceed to the next step.

Component Table:

Component	Proceed to
Gateway ECU (1C6)	Gateway ECU power source circuit (See page NS-166)
Stereo component amplifier (440)	Stereo component amplifier power source circuit (See page AV-149)

Component	Proceed to
Multi-display (110)	Multi-display power source circuit (See page NS-161)
Navigation ECU (178)	Navigation ECU power source circuit (See page NS-164)
Clock assembly (1D6)	Clock power source circuit (See page NS-168)

NEXT

3 INSPECT RADIO RECEIVER

Wire Harness View (12 Speaker):

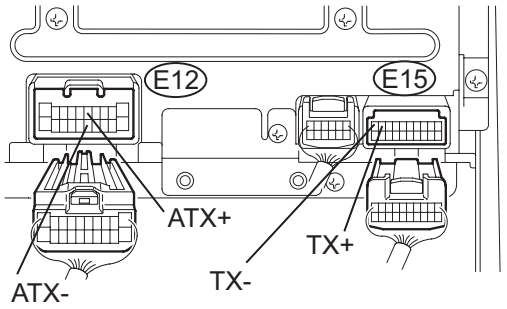

Wire Harness View (9 Speaker):

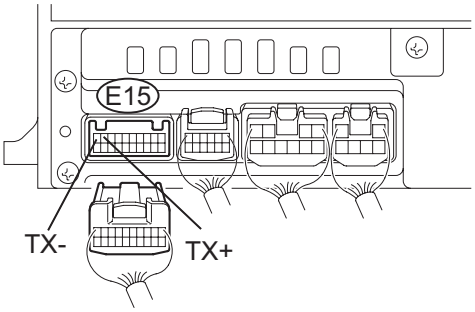

P

E126157E01

(a) Disconnect the radio receiver connectors.
(b) Measure the resistance according to the value(s) in the table below.

Standard resistance

Tester Connection	Condition	Specified Condition
ATX+ (E12-5) - ATX- (E12-15) (*1)	Always	60 to 80 Ω
TX+ (E15-9) - TX- (E15-10)	Always	60 to 80 Ω

*1: for 12 Speaker System

NG → REPLACE RADIO RECEIVER

OK

4 CHECK HARNESS AND CONNECTOR (RADIO RECEIVER - COMPONENT SHOWN BY SUB-CODE)

HINT:
- Start the check from the circuit that is near the component shown by the sub-code first.
- For details of the connectors, refer to "TERMINALS OF ECU" (See page NS-26).

(a) Referring to the AVC-LAN wiring diagram below, check the AVC-LAN circuit between the radio receiver and the component shown by the sub-code.
  (1) Disconnect all connectors between the radio receiver and the component shown by sub-code.

(2) Check for an open or short in the AVC-LAN circuit between the radio receiver and the component shown by the sub-code.
OK:
There is no open or short circuit.

AVC-LAN WIRING DIAGRAM

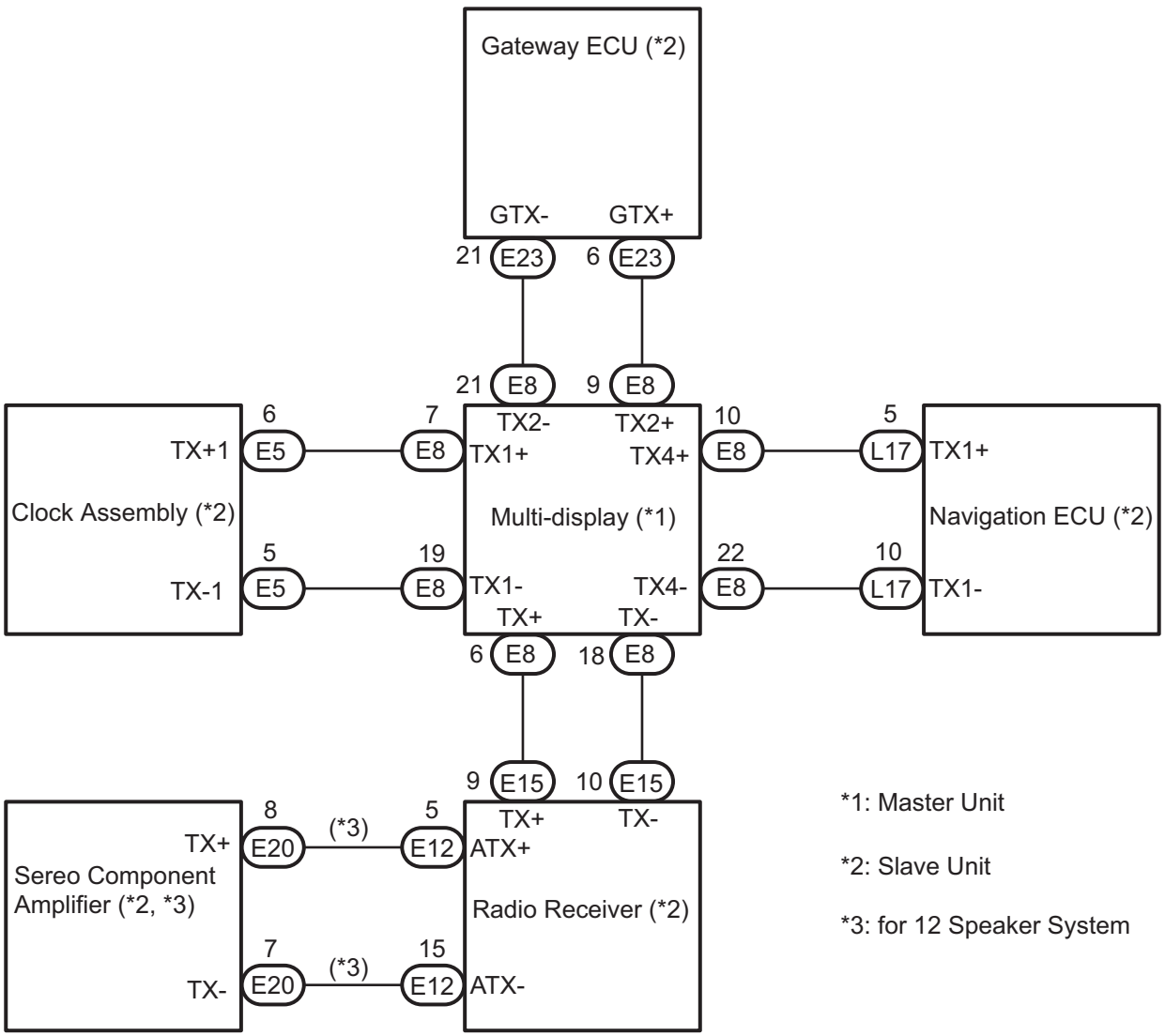

NG → **REPAIR OR REPLACE HARNESS OR CONNECTOR**

OK

5	REPLACE COMPONENT SHOWN BY SUB-CODE

(a) Replace the component shown by the sub-code with a normal one and check if the same problem occurs again.

NS

OK:
Same problem does not occur.

NG → **REPLACE RADIO RECEIVER**

OK

END

Stereo Component Amplifier Communication Error

INSPECTION PROCEDURE

1 IDENTIFY THE COMPONENT SHOWN BY SUB-CODE

Example:

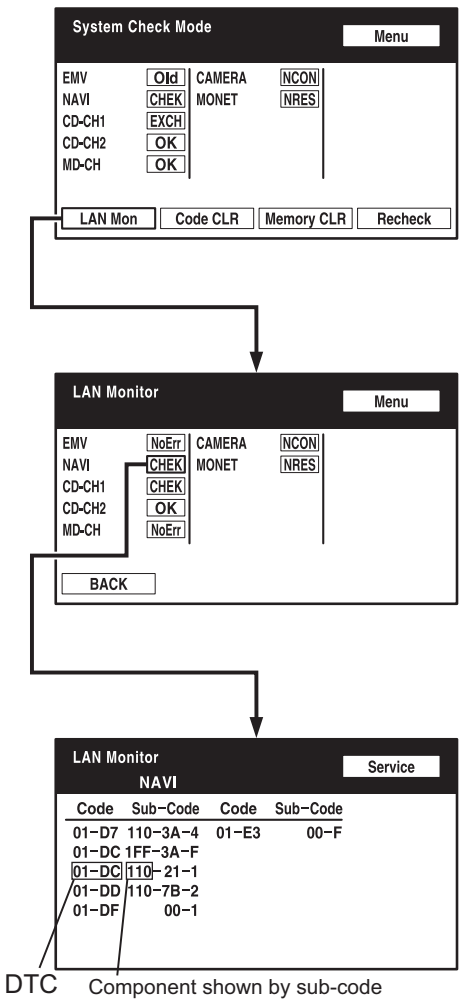

(a) Enter the diagnostic mode.
(b) Press the "LAN Mon" switch to change to "LAN Monitor" mode.
(c) Identify the component shown by the sub-code.
HINT:
- "110 (multi-display)" is the component shown by the sub-code in the example shown in the illustration.
- The sub-code will be indicated by its physical address.

NEXT

2 CHECK POWER SOURCE CIRCUIT OF COMPONENT SHOWN BY SUB-CODE

(a) Inspect the power source circuit of the component shown by the sub-code.
If the power source circuit is operating normally, proceed to the next step.

Component Table:

Component	Proceed to
Radio receiver (190)	Radio receiver power source circuit (See page AV-147)
Gateway ECU (1C6)	Gateway ECU power source circuit (See page NS-166)

Component	Proceed to
Multi-display (110)	Multi-display power source circuit (See page NS-161)
Navigation ECU (178)	Navigation ECU power source circuit (See page NS-164)
Clock assembly (1D6)	Clock power source circuit (See page NS-168)

NEXT

3 INSPECT RADIO RECEIVER

Wire Harness View (12 Speaker):

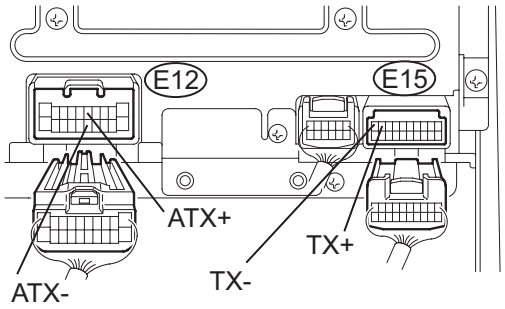

Wire Harness View (9 Speaker):

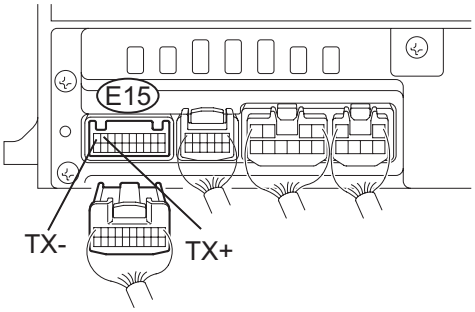

P

E126157E01

(a) Disconnect the radio receiver connectors.
(b) Measure the resistance according to the value(s) in the table below.

Standard resistance

Tester Connection	Condition	Specified Condition
ATX+ (E12-5) - ATX- (E12-15) (*1)	Always	60 to 80 Ω
TX+ (E15-9) - TX- (E15-10)	Always	60 to 80 Ω

*1: for 12 Speaker System

NG → REPLACE RADIO RECEIVER

OK

4 CHECK HARNESS AND CONNECTOR (STEREO COMPONENT AMPLIFIER - COMPONENT SHOWN BY SUB-CODE)

HINT:
- Start the check from the circuit that is near the component shown by the sub-code first.
- For details of the connectors, refer to "TERMINALS OF ECU" (See page NS-26).

(a) Referring to the AVC-LAN wiring diagram below, check the AVC-LAN circuit between the stereo component amplifier and the component shown by the sub-code.
  (1) Disconnect all connectors between the stereo component amplifier and the component shown by sub-code.

(2) Check for an open or short in the AVC-LAN circuit between the stereo component amplifier and the component shown by the sub-code.
OK:
There is no open or short circuit.

AVC-LAN WIRING DIAGRAM

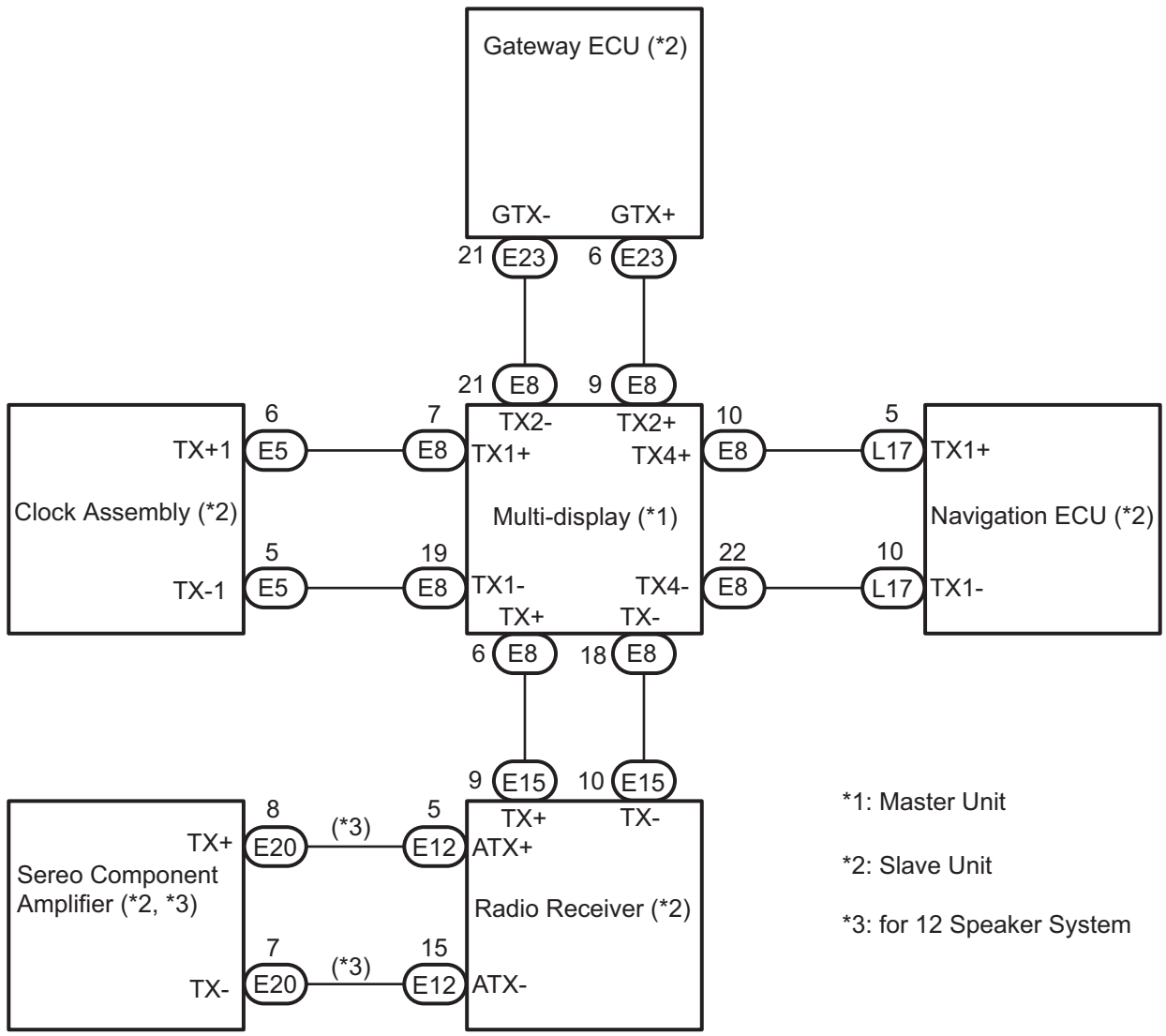

NG → **REPAIR OR REPLACE HARNESS OR CONNECTOR**

OK →

5	REPLACE COMPONENT SHOWN BY SUB-CODE

(a) Replace the component shown by the sub-code with a normal one and check if the same problem occurs again.

OK:
Same problem does not occur.

NG → **REPLACE STEREO COMPONENT AMPLIFIER**

OK

END

Multi-display Communication Error

INSPECTION PROCEDURE

1 IDENTIFY THE COMPONENT SHOWN BY SUB-CODE

Example:

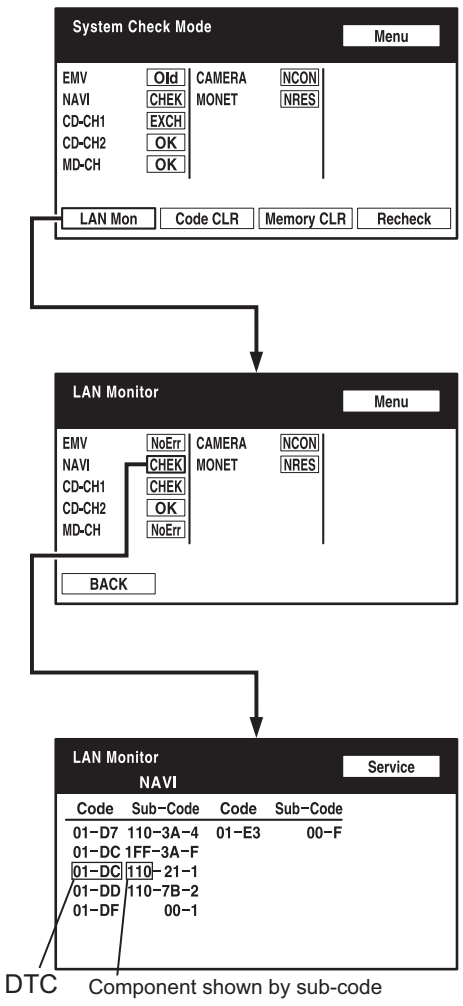

(a) Enter the diagnostic mode.
(b) Press the "LAN Mon" switch to change to "LAN Monitor" mode.
(c) Identify the component shown by the sub-code.
HINT:
- "110 (multi-display)" is the component shown by the sub-code in the example shown in the illustration.
- The sub-code will be indicated by its physical address.

NEXT

2 CHECK POWER SOURCE CIRCUIT OF COMPONENT SHOWN BY SUB-CODE

(a) Inspect the power source circuit of the component shown by the sub-code.
If the power source circuit is operating normally, proceed to the next step.

Component Table:

Component	Proceed to
Radio receiver (190)	Radio receiver power source circuit (See page AV-147)
Stereo component amplifier (440)	Stereo component amplifier power source circuit (See page AV-149)

Component	Proceed to
Gateway ECU (1C6)	Gateway ECU power source circuit (See page NS-166)
Navigation ECU (178)	Navigation ECU power source circuit (See page NS-164)
Clock assembly (1D6)	Clock power source circuit (See page NS-168)

NEXT

3 INSPECT RADIO RECEIVER

Wire Harness View (12 Speaker):

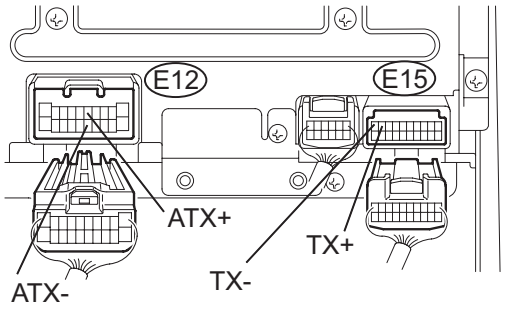

Wire Harness View (9 Speaker):

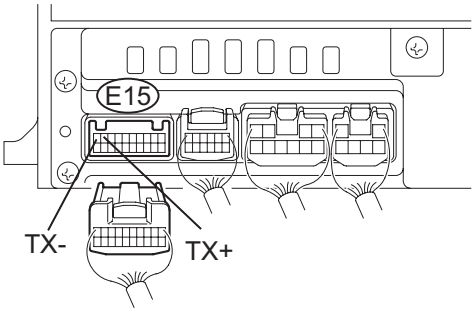

P

E126157E01

(a) Disconnect the radio receiver connectors.
(b) Measure the resistance according to the value(s) in the table below.

Standard resistance

Tester Connection	Condition	Specified Condition
ATX+ (E12-5) - ATX- (E12-15) (*1)	Always	60 to 80 Ω
TX+ (E15-9) - TX- (E15-10)	Always	60 to 80 Ω

*1: for 12 Speaker System

NG → REPLACE RADIO RECEIVER

OK

4 CHECK HARNESS AND CONNECTOR (MULTI-DISPLAY - COMPONENT SHOWN BY SUB-CODE)

HINT:
- Start the check from the circuit that is near the component shown by the sub-code first.
- For details of the connectors, refer to "TERMINALS OF ECU" (See page NS-26).

(a) Referring to the AVC-LAN wiring diagram below, check the AVC-LAN circuit between the multi-display and the component shown by the sub-code.
  (1) Disconnect all connectors between the multi-display and the component shown by sub-code.

(2) Check for an open or short in the AVC-LAN circuit between the multi-display and the component shown by the sub-code.
OK:
There is no open or short circuit.

AVC-LAN WIRING DIAGRAM

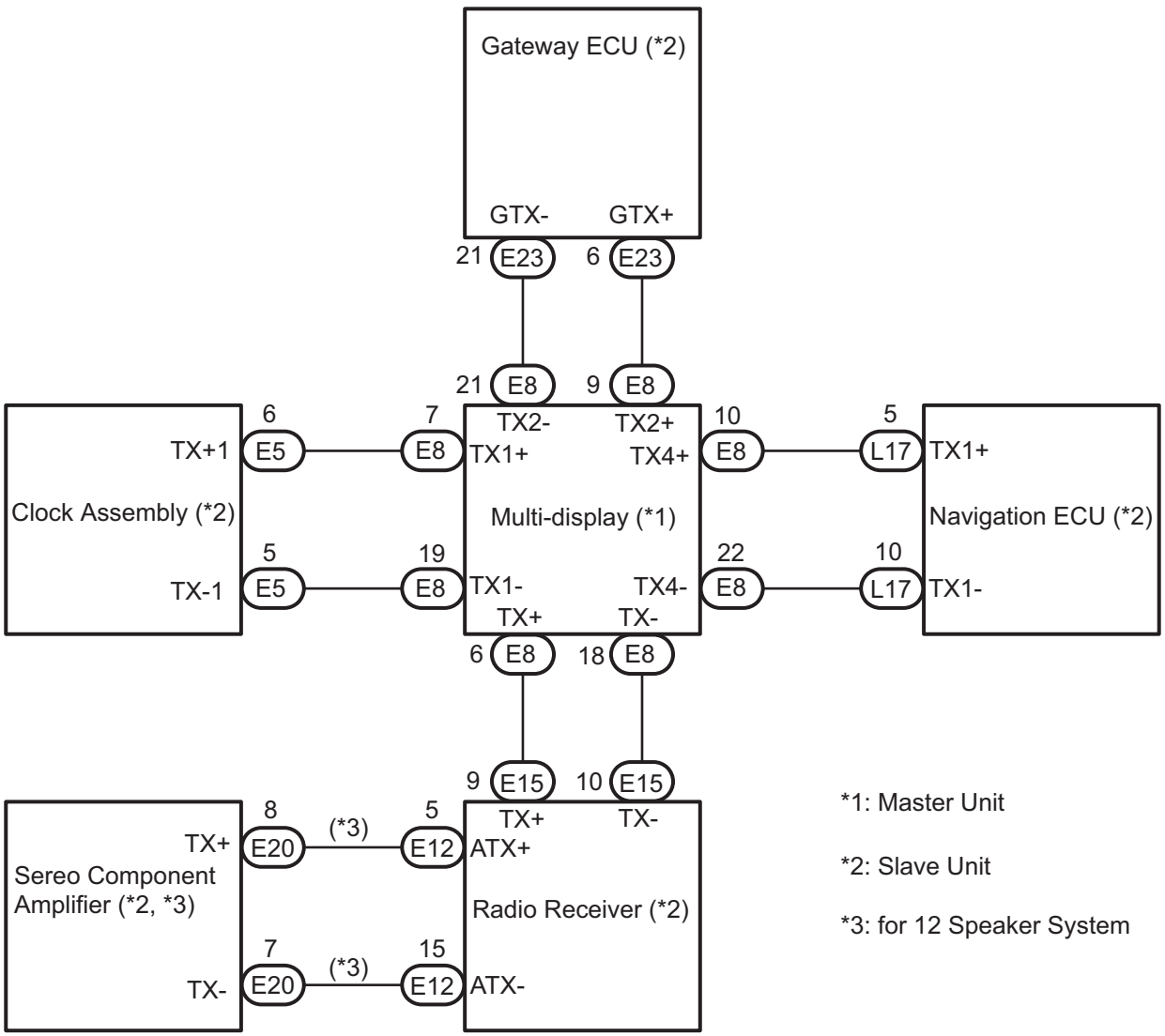

NG → **REPAIR OR REPLACE HARNESS OR CONNECTOR**

OK

5	REPLACE COMPONENT SHOWN BY SUB-CODE

(a) Replace the component shown by the sub-code with a normal one and check if the same problem occurs again.

OK:
Same problem does not occur.

NG → **REPLACE MULTI-DISPLAY**

OK

END

Navigation ECU Communication Error

INSPECTION PROCEDURE

1 IDENTIFY COMPONENT SHOWN BY SUB-CODE

Example:

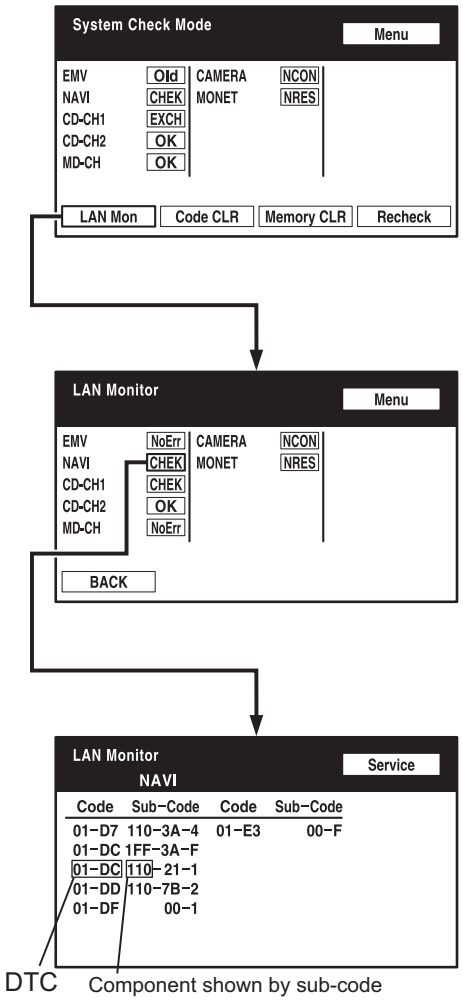

(a) Enter the diagnostic mode.
(b) Press the "LAN Mon" switch to change to "LAN Monitor" mode.
(c) Identify the component shown by the sub-code.
HINT:
- "110 (multi-display)" is the component shown by the sub-code in the example shown in the illustration.
- The sub-code will be indicated by its physical address.

NEXT

2 CHECK POWER SOURCE CIRCUIT OF COMPONENT SHOWN BY SUB-CODE

(a) Inspect the power source circuit of the component shown by the sub-code.
If the power source circuit is operating normally, proceed to the next step.

Component Table:

Component	Proceed to
Radio receiver (190)	Radio receiver power source circuit (See page AV-147)
Stereo component amplifier (440)	Stereo component amplifier power source circuit (See page AV-149)

Component	Proceed to
Multi-display (110)	Multi-display power source circuit (See page NS-161)
Gateway ECU (1C6)	Gateway ECU power source circuit (See page NS-166)
Clock assembly (1D6)	Clock power source circuit (See page NS-168)

NEXT

3 INSPECT RADIO RECEIVER

Wire Harness View (12 Speaker):

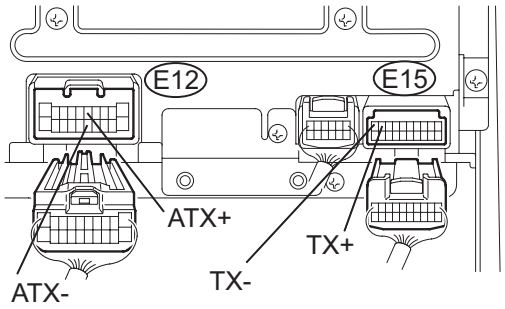

Wire Harness View (9 Speaker):

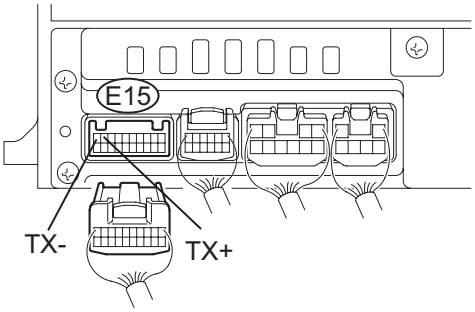

P

E126157E01

(a) Disconnect the radio receiver connectors.
(b) Measure the resistance according to the value(s) in the table below.

Standard resistance

Tester Connection	Condition	Specified Condition
ATX+ (E12-5) - ATX- (E12-15) (*1)	Always	60 to 80 Ω
TX+ (E15-9) - TX- (E15-10)	Always	60 to 80 Ω

*1: for 12 Speaker System

NG → REPLACE RADIO RECEIVER

OK

4 CHECK HARNESS AND CONNECTOR (NAVIGATION ECU - COMPONENT SHOWN BY SUB-CODE)

HINT:
- Start the check from the circuit that is near the component shown by the sub-code first.
- For details of the connectors, refer to "TERMINALS OF ECU" (See page NS-26).

(a) Referring to the AVC-LAN wiring diagram below, check the AVC-LAN circuit between the navigation ECU and the component shown by the sub-code.
  (1) Disconnect all connectors between the navigation ECU and the component shown by sub-code.

(2) Check for an open or short in the AVC-LAN circuit between the navigation ECU and the component shown by the sub-code.
OK:
There is no open or short circuit.

AVC-LAN WIRING DIAGRAM

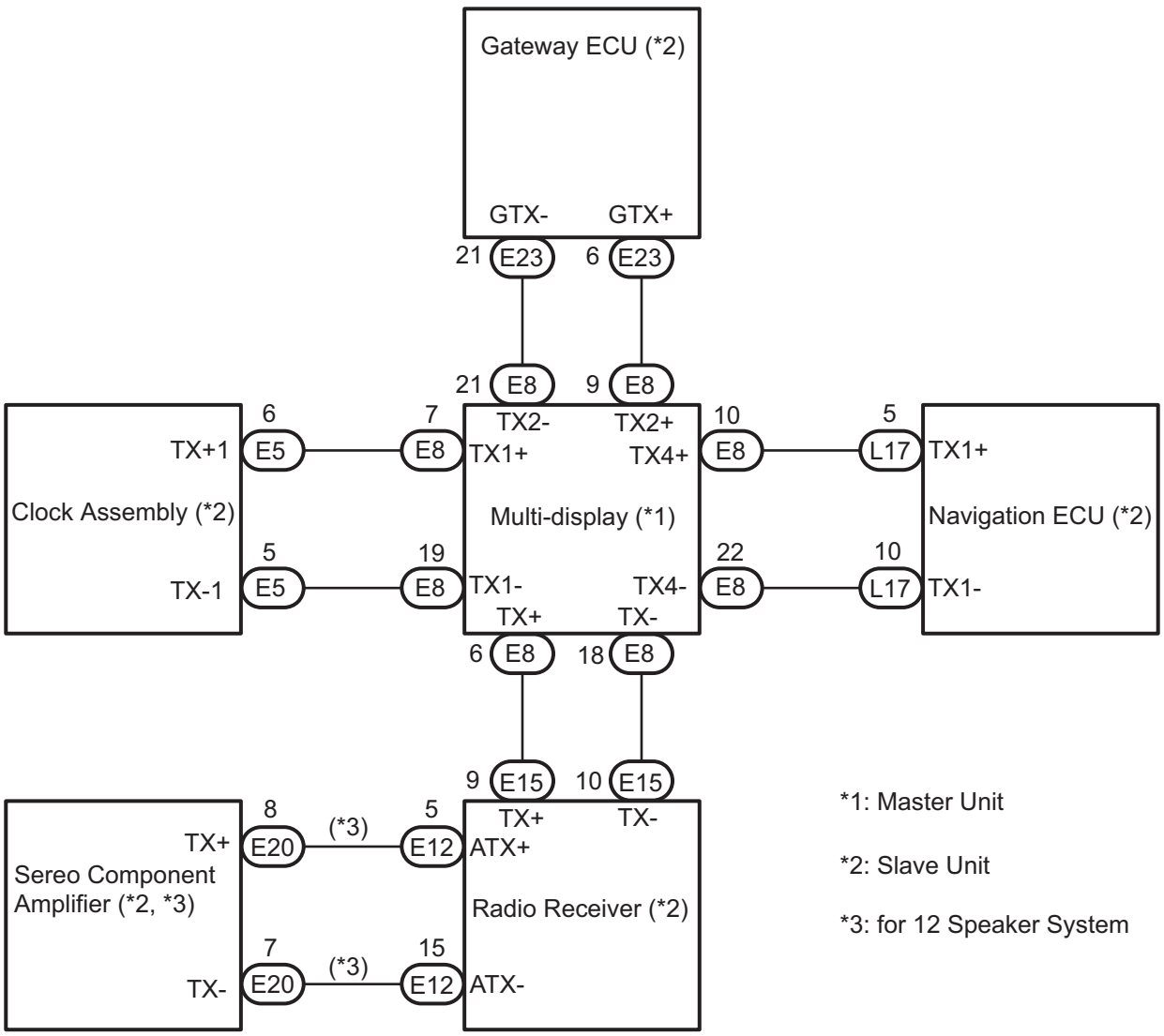

NG → **REPAIR OR REPLACE HARNESS OR CONNECTOR**

OK

5	REPLACE COMPONENT SHOWN BY SUB-CODE

(a) Replace the component shown by the sub-code with a normal one and check if the same problem occurs again.

NS

OK:
Same problem does not occur.

NG → **REPLACE NAVIGATION ECU**

OK

END

Clock Communication Error

INSPECTION PROCEDURE

1 IDENTIFY THE COMPONENT SHOWN BY SUB-CODE

Example:

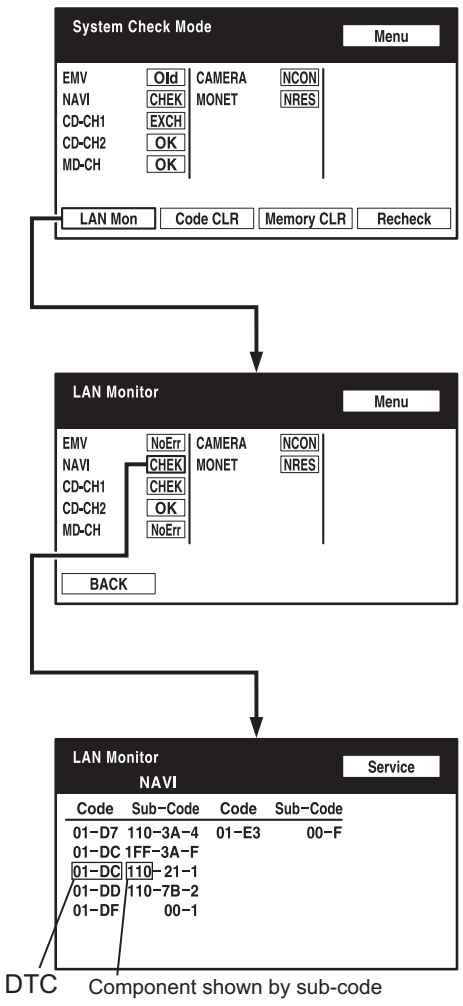

(a) Enter the diagnostic mode.
(b) Press the "LAN Mon" switch to change to "LAN Monitor" mode.
(c) Identify the component shown by the sub-code.
HINT:
- "110 (multi-display)" is the component shown by the sub-code in the example shown in the illustration.
- The sub-code will be indicated by its physical address.

NEXT

2 CHECK POWER SOURCE CIRCUIT OF COMPONENT SHOWN BY SUB-CODE

(a) Inspect the power source circuit of the component shown by the sub-code.
If the power source circuit is operating normally, proceed to the next step.

Component Table:

Component	Proceed to
Gateway ECU (1C6)	Gateway ECU power source circuit (See page NS-166)
Stereo component amplifier (440)	Stereo component amplifier power source circuit (See page AV-149)

Component	Proceed to
Multi-display (110)	Multi-display power source circuit (See page NS-161)
Navigation ECU (178)	Navigation ECU power source circuit (See page NS-164)
Radio receiver (190)	Radio receiver power source circuit (See page AV-147)

NEXT

3 INSPECT RADIO RECEIVER

Wire Harness View (12 Speaker):

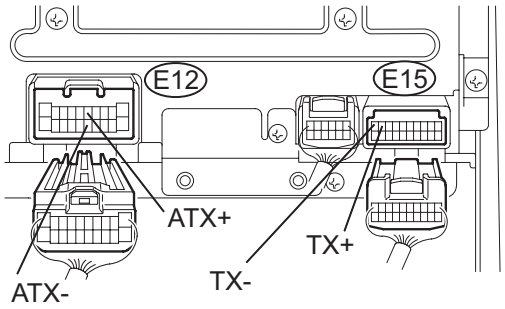

Wire Harness View (9 Speaker):

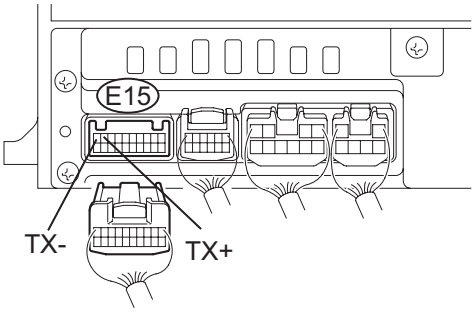

P

E126157E01

(a) Disconnect the radio receiver connectors.
(b) Measure the resistance according to the value(s) in the table below.

Standard resistance

Tester connection	Condition	Specified condition
ATX+ (E12-5) - ATX- (E12-15) (*1)	Always	60 to 80 Ω
TX+ (E15-9) - TX- (E15-10)	Always	60 to 80 Ω

*1: for 12 Speaker System

NG → REPLACE RADIO RECEIVER

OK

4 CHECK HARNESS AND CONNECTOR (CLOCK ASSEMBLY - COMPONENT SHOWN BY SUB-CODE)

HINT:
- Start the check from the circuit that is near the component shown by the sub-code first.
- For details of the connectors, refer to "TERMINALS OF ECU" (See page NS-26).

(a) Referring to the AVC-LAN wiring diagram below, check the AVC-LAN circuit between the clock assembly and the component shown by the sub-code.
  (1) Disconnect all connectors between the clock assembly and the component shown by sub-code.

(2) Check for an open or short in the AVC-LAN circuit between the clock assembly and the component shown by the sub-code.

AVC-LAN WIRING DIAGRAM

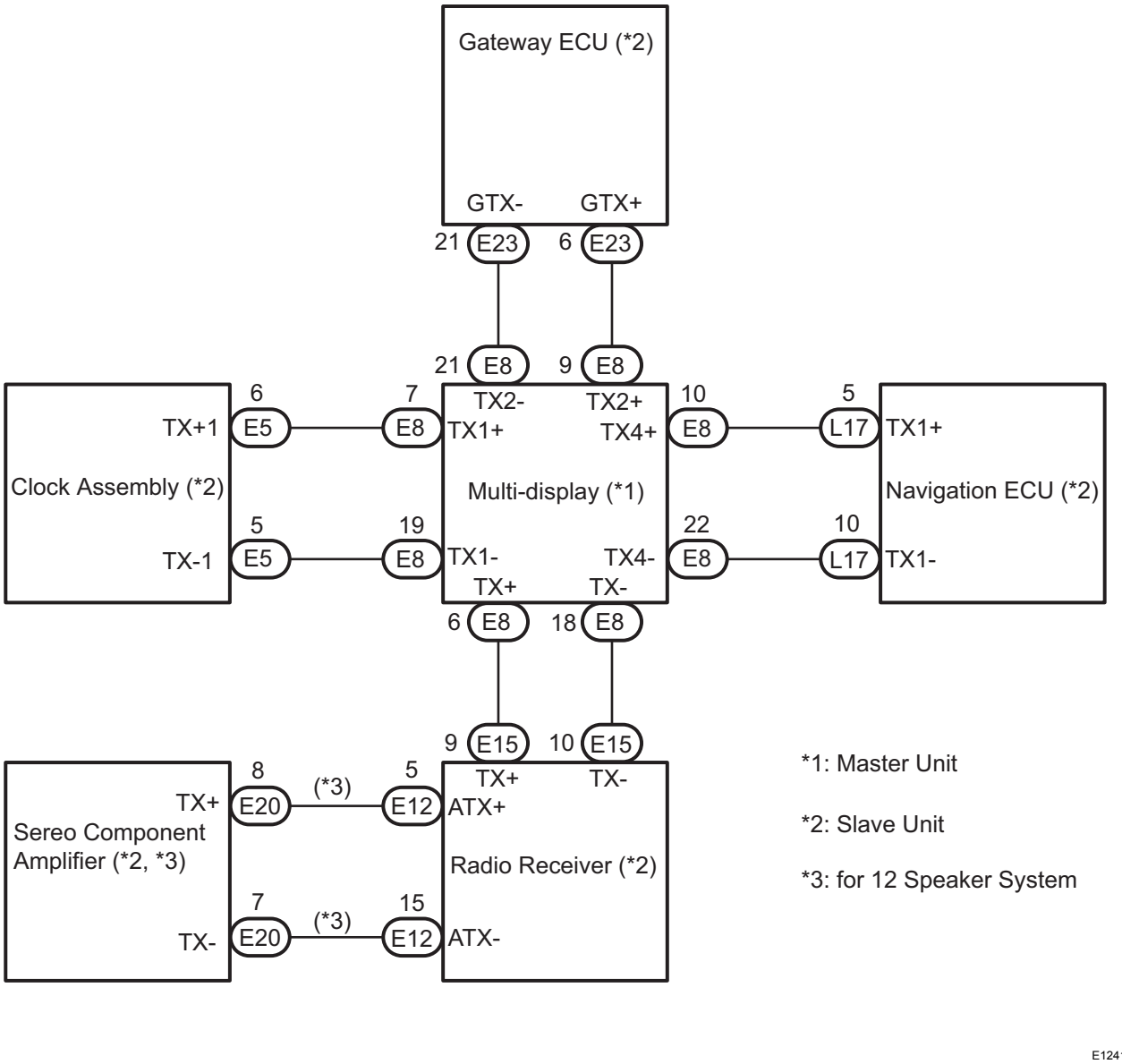

OK:

There is no open or short circuit.

NG	**REPAIR OR REPLACE HARNESS OR CONNECTOR**

OK

5	**REPLACE COMPONENT SHOWN BY SUB-CODE**

(a) Replace the component shown by the sub-code with a normal one and check if the same problem occurs again.

NS

OK:
Same problem does not occur.

NG → **REPLACE CLOCK ASSEMBLY**

OK

END

Navigation Controller Power Source Circuit

DESCRIPTION

This circuit provides power to the navigation controller.

WIRING DIAGRAM

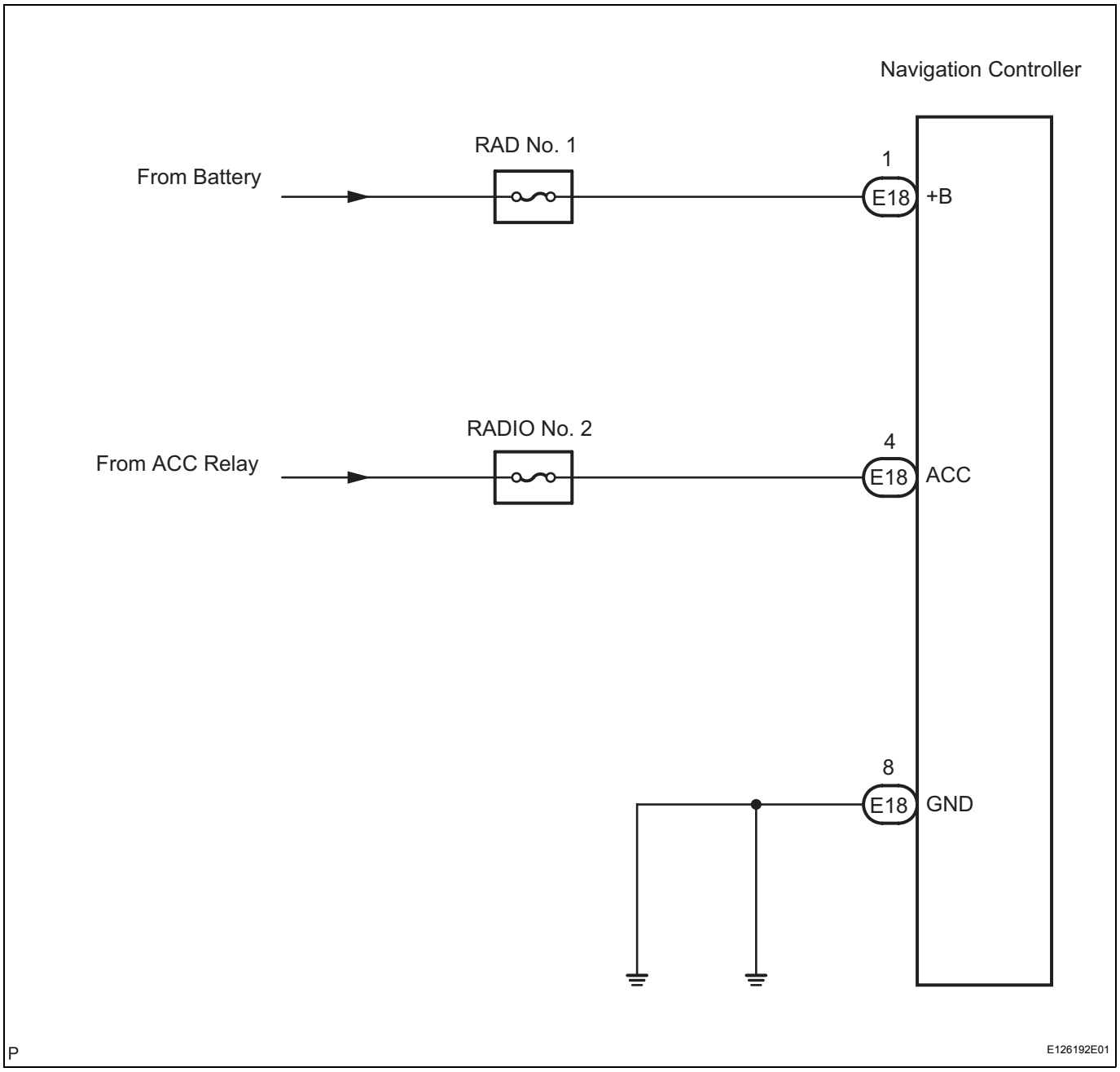

INSPECTION PROCEDURE

1	INSPECT NAVIGATION CONTROLLER

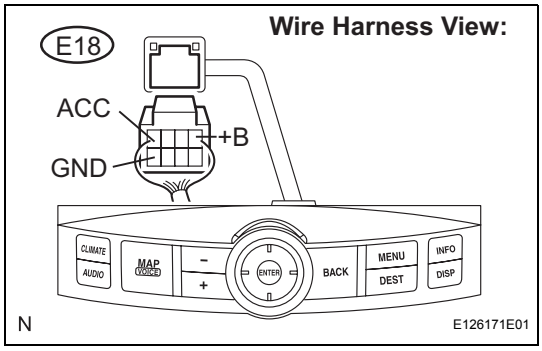

(a) Disconnect the navigation controller E18 connector.
(b) Measure the resistance according to the value(s) in the table below.

Standard resistance

Tester connection	Condition	Specified condition
GND - Body ground	Always	Below 1 Ω

(c) Measure the voltage according to the value(s) in the table below.

Standard voltage

Tester connection	Condition	Specified condition
+B - GND	Always	10 to 14 V
ACC - GND	Ignition switch on (ACC)	10 to 14 V

NG → **REPAIR OR REPLACE HARNESS OR CONNECTOR**

NS

OK

PROCEED TO NEXT CIRCUIT INSPECTION SHOWN IN PROBLEM SYMPTOMS TABLE

Multi-display Power Source Circuit

DESCRIPTION

This is the power source circuit to operate the multi-display.

WIRING DIAGRAM

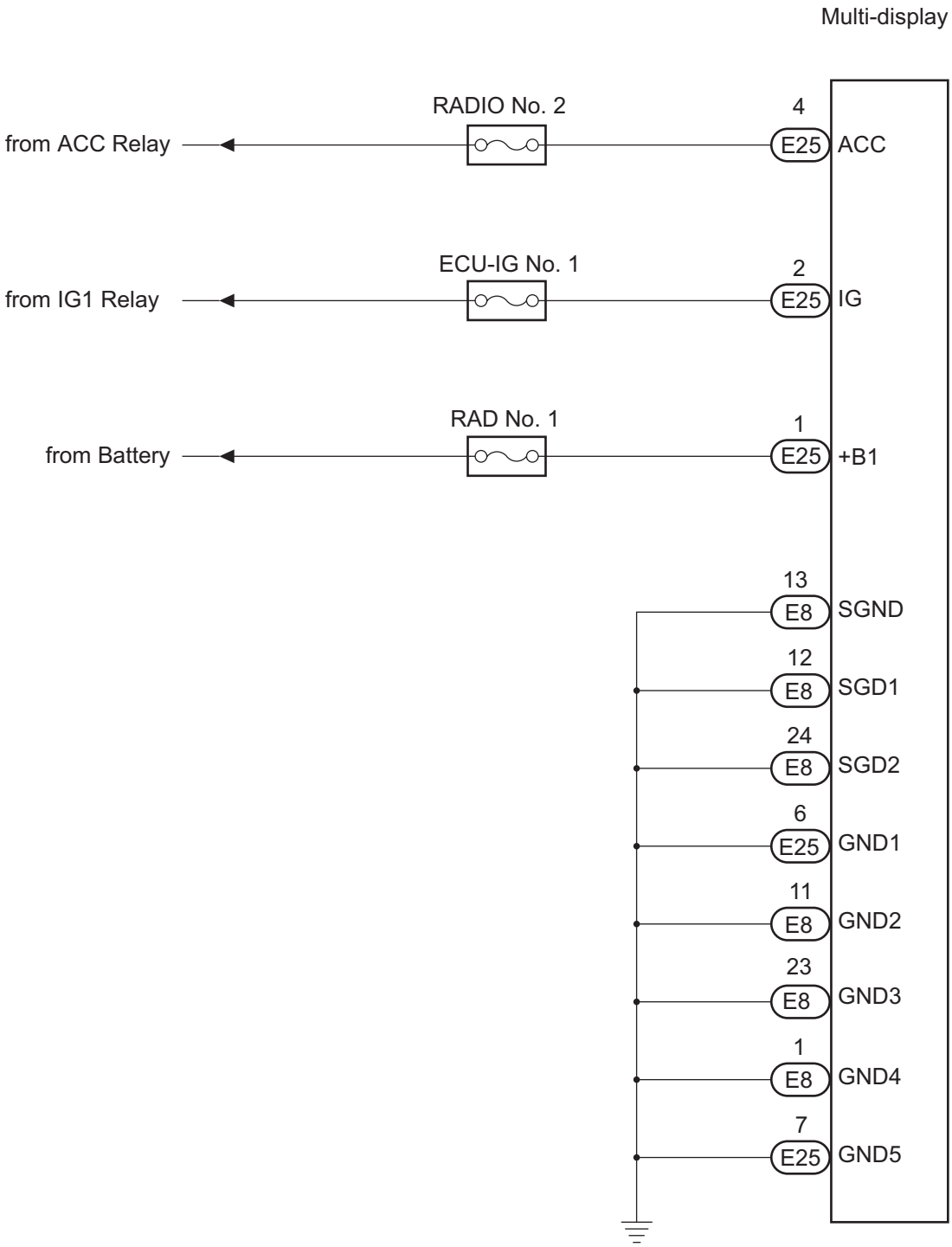

H

E126190E01

NS

INSPECTION PROCEDURE

1	INSPECT MULTI-DISPLAY

Wire Harness View:

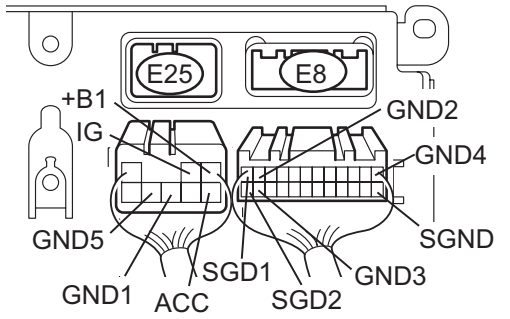

(a) Disconnect the multi-display connectors E25 and E8.
(b) Measure the resistance according to the value(s) in the table below.

Standard resistance

Tester connection	Condition	Specified condition
GND1 - Body ground	Always	Below 1 Ω
GND2 - Body ground	Always	Below 1 Ω
GND3 - Body ground	Always	Below 1 Ω
GND4 - Body ground	Always	Below 1 Ω
GND5 - Body ground	Always	Below 1 Ω
SGD1 - Body ground	Always	Below 1 Ω
SGD2 - Body ground	Always	Below 1 Ω
SGND - Body ground	Always	Below 1 Ω

(c) Measure the voltage according to the value(s) in the table below.

Standard voltage

Tester connection	Condition	Specified condition
+B1 - GND1	Always	10 to 14 V
ACC - GND1	Ignition SW on (ACC)	10 to 14 V
IG - GND1	Ignition SW on (IG)	10 to 14 V

NG → REPAIR OR REPLACE HARNESS OR CONNECTOR

OK

PROCEED TO NEXT CIRCUIT INSPECTION SHOWN IN PROBLEM SYMPTOMS TABLE

Navigation ECU Power Source Circuit

DESCRIPTION

This is the power source circuit to operate the navigation ECU.

WIRING DIAGRAM

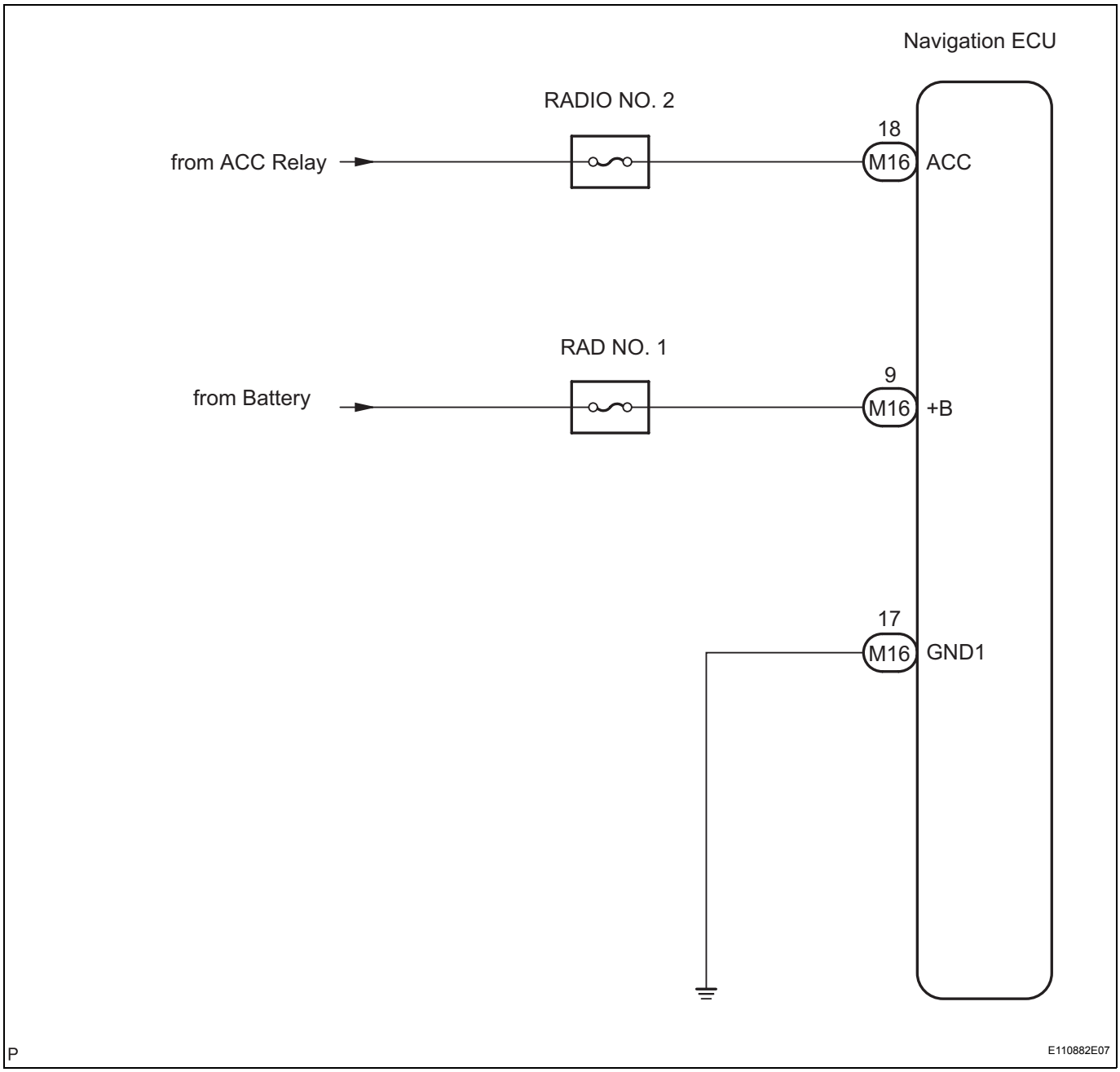

INSPECTION PROCEDURE

1 INSPECT NAVIGATION ECU

Wire Harness View:

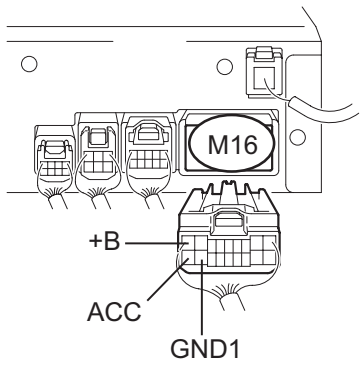

P E126173E03

(a) Disconnect the navigation ECU connector M16.
(b) Measure the resistance according to the value(s) in the table below.

Standard resistance

Tester connection	Condition	Specified condition
GND1 - Body ground	Always	Below 1 Ω

(c) Measure the voltage according to the value(s) in the table below.

Standard voltage

Tester connection	Condition	Specified condition
+B - GND1	Always	10 to 14 V
ACC - GND1	Ignition SW on (ACC)	10 to 14 V

NG → **REPAIR OR REPLACE HARNESS OR CONNECTOR**

OK

PROCEED TO NEXT CIRCUIT INSPECTION SHOWN IN PROBLEM SYMPTOMS TABLE

NS

Gateway ECU Power Source Circuit

DESCRIPTION

This is the power source circuit to operate the gateway ECU.

WIRING DIAGRAM

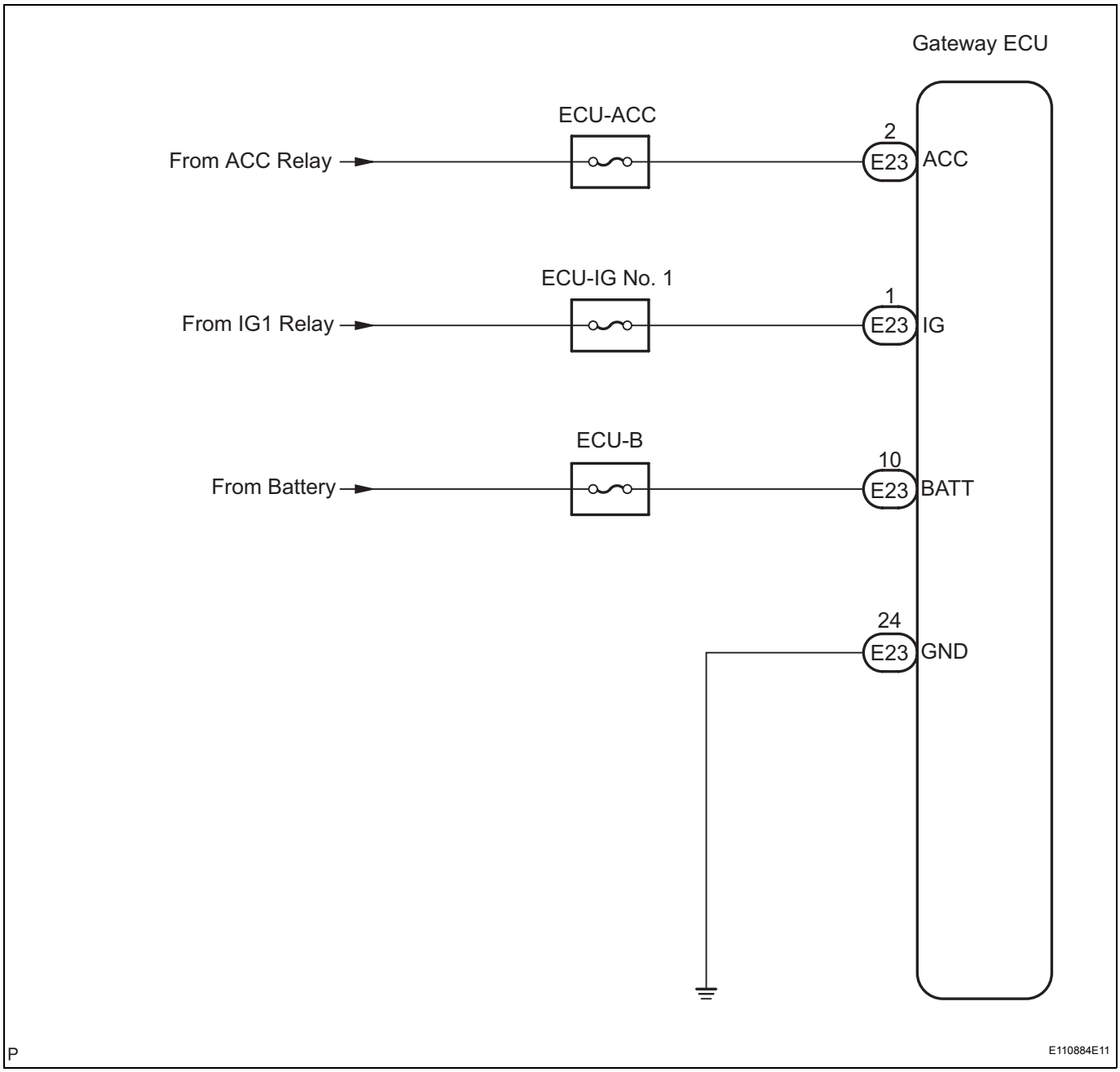

INSPECTION PROCEDURE

1	INSPECT GATEWAY ECU

Wire Harness View:

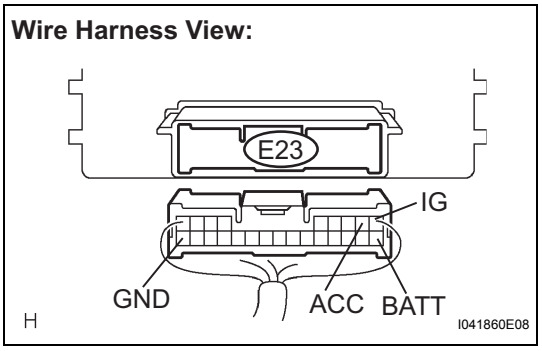

(a) Disconnect the gateway ECU connector E23.
(b) Measure the resistance according to the value(s) in the table below.

Standard resistance

Tester connection	Condition	Specified condition
GND - Body ground	Always	Below 1 Ω

(c) Measure the voltage according to the value(s) in the table below.

Standard voltage

Tester connection	Condition	Specified condition
BATT - GND	Always	10 to 14 V
ACC - GND	Ignition SW on (ACC)	10 to 14 V
IG - GND	Ignition SW on (IG)	10 to 14 V

NG → REPAIR OR REPLACE HARNESS OR CONNECTOR

OK

PROCEED TO NEXT CIRCUIT INSPECTION SHOWN IN PROBLEM SYMPTOMS TABLE

Clock Power Source Circuit

DESCRIPTION

This is the power source circuit to operate the clock assembly.

WIRING DIAGRAM

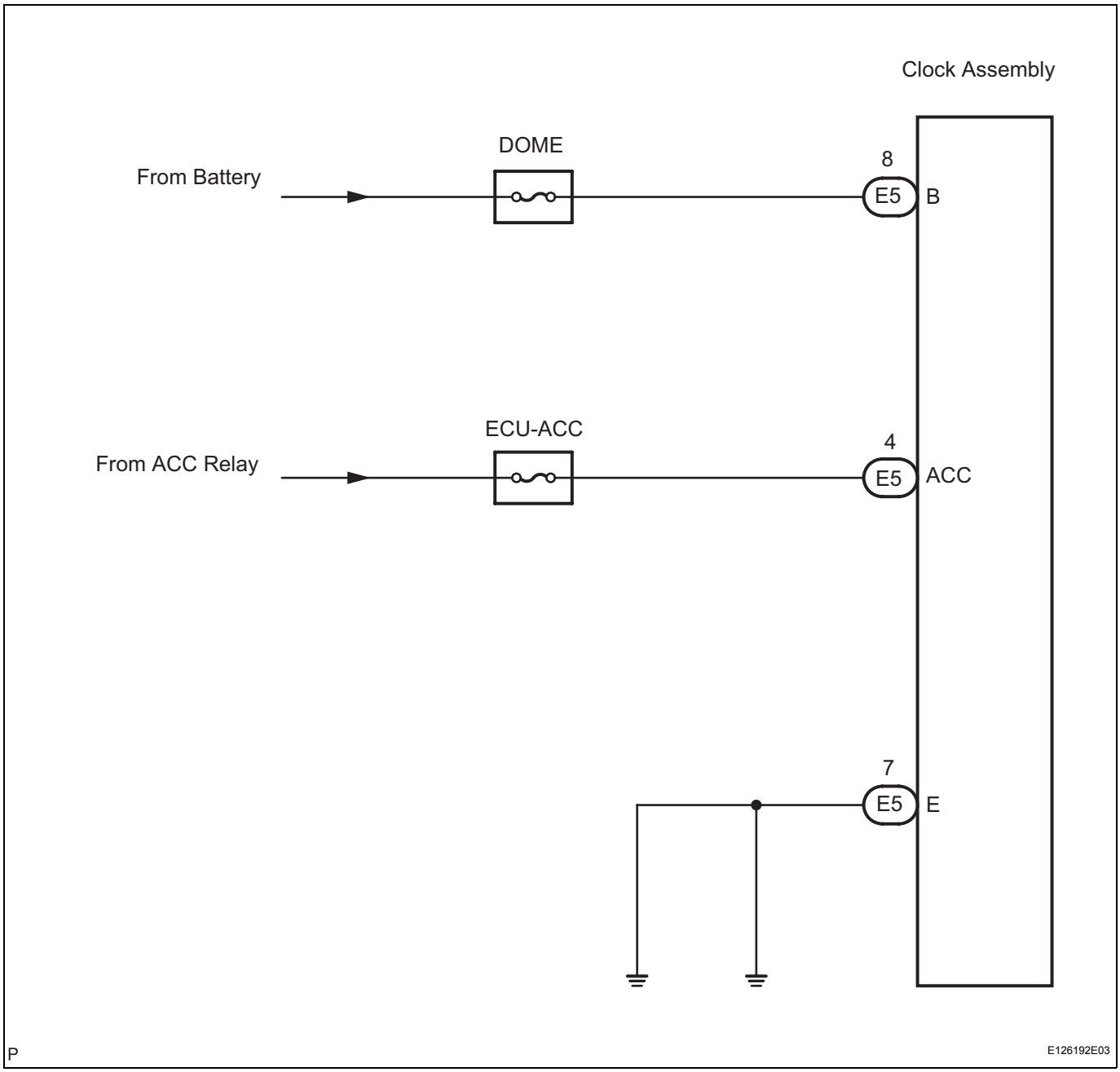

INSPECTION PROCEDURE

1	INSPECT CLOCK ASSEMBLY

Wire Harness View:

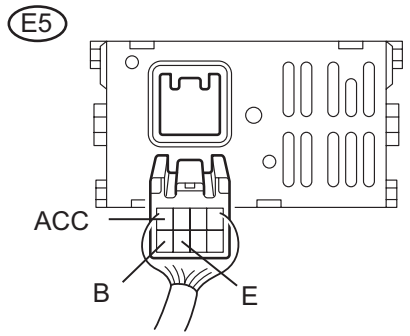

N E126184E01

(a) Disconnect the clock assembly connector E5.
(b) Measure the resistance according to the value(s) in the table below.

Standard resistance

Tester connection	Condition	Specified condition
E - Body ground	Always	Below 1 Ω

(c) Measure the voltage according to the value(s) in the table below.

Standard voltage

Tester connection	Condition	Specified condition
B - E	Always	10 to 14 V
ACC - E	Ignition switch on (ACC)	10 to 14 V

NG → **REPAIR OR REPLACE HARNESS OR CONNECTOR**

OK

PROCEED TO NEXT CIRCUIT INSPECTION SHOWN IN PROBLEM SYMPTOMS TABLE

NS

NAVIGATION ECU

COMPONENTS

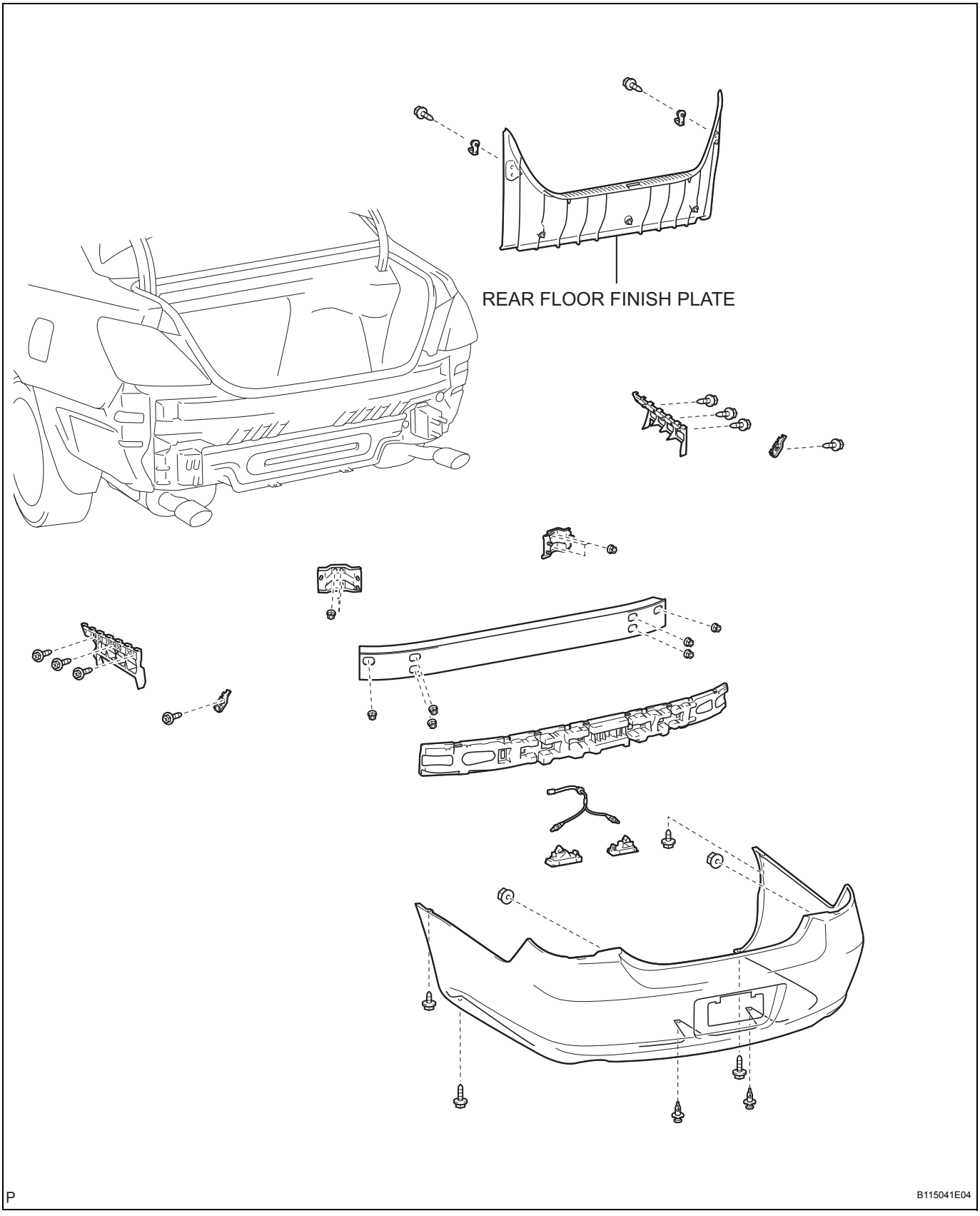

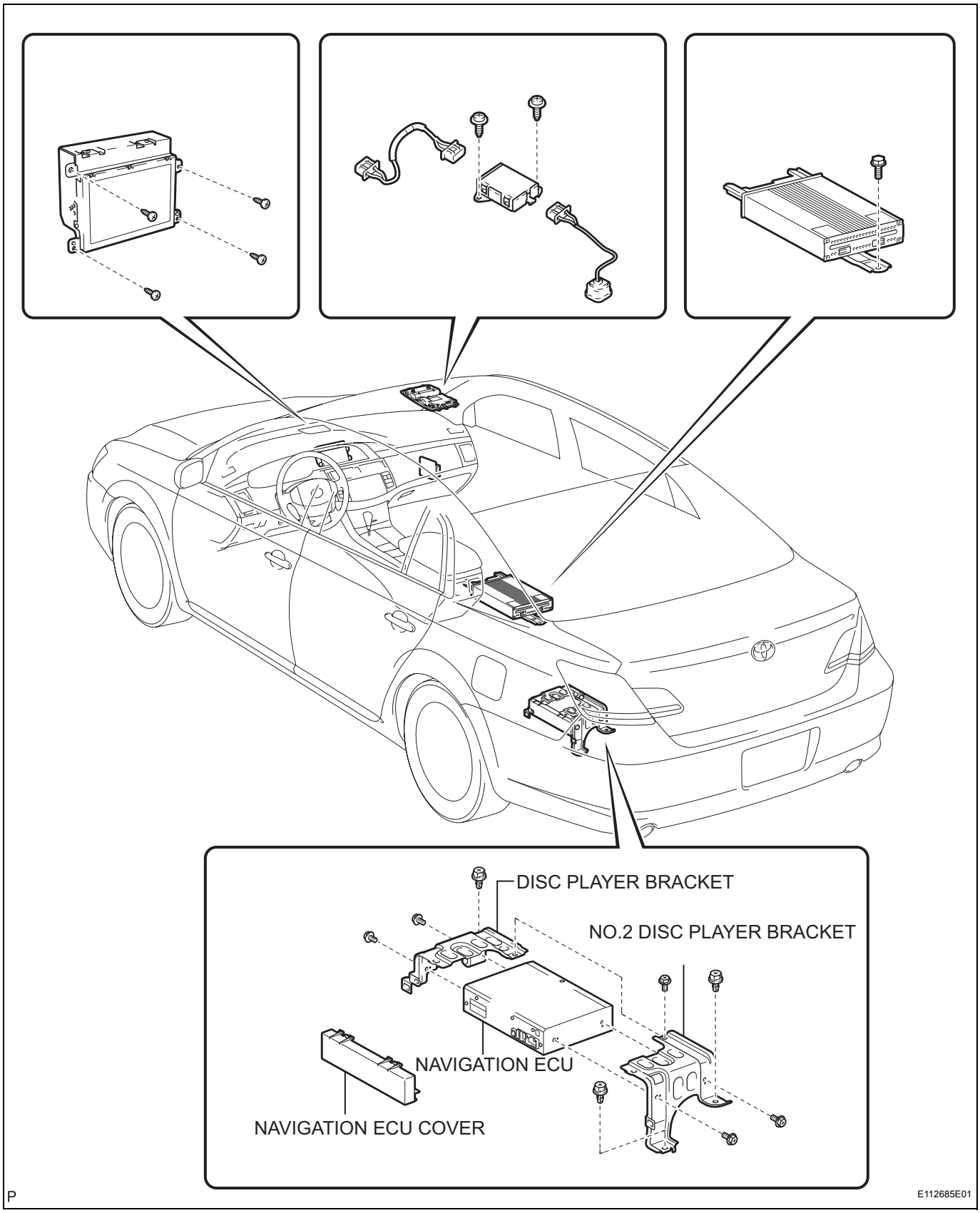
DISC PLAYER BRACKET
NO.2 DISC PLAYER BRACKET
NAVIGATION ECU
NAVIGATION ECU COVER
P
E112685E01

REMOVAL

1. **REMOVE LUGGAGE COMPARTMENT TRIM COVER INNER LH**
2. **REMOVE REAR FLOOR FINISH PLATE (See page ET-6)**
3. **REMOVE DISC PLAYER DISC**
   (a) Eject the disc player disc.
4. **REMOVE NAVIGATION ECU COVER**
   (a) Disengage the 4 claws and remove the navigation ECU cover.

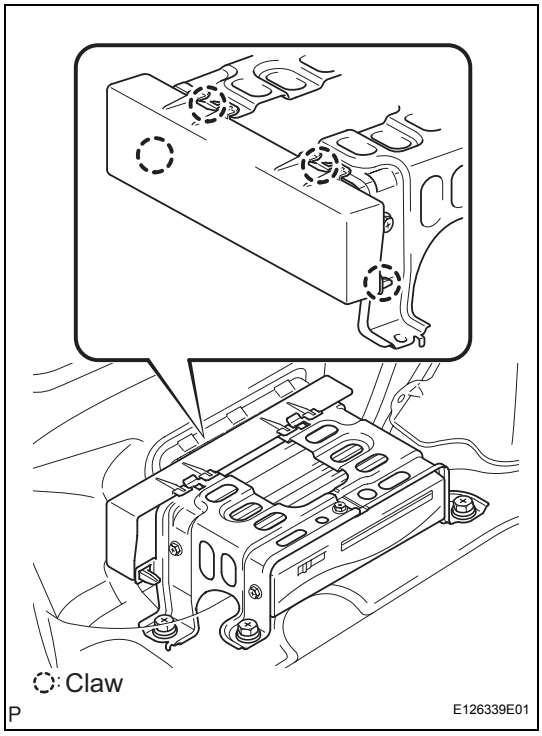

5. **REMOVE NAVIGATION COMPUTER WITH BRACKET**
   (a) Remove the 3 screws and navigation computer w/ bracket.

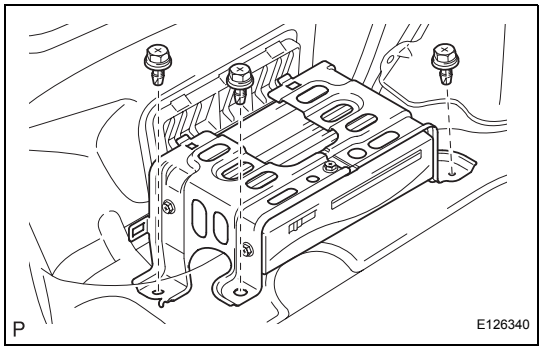

6. **REMOVE NO.2 DISC PLAYER BRACKET**
   (a) Remove the 3 bolts and No. 2 disc player bracket.

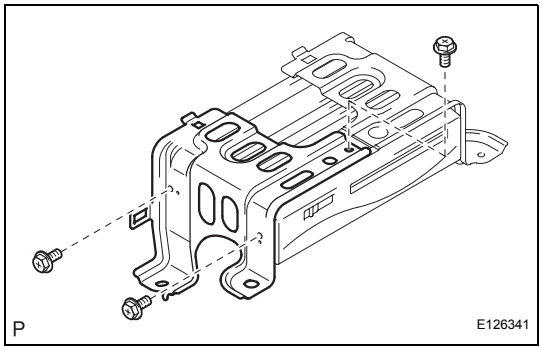

NS

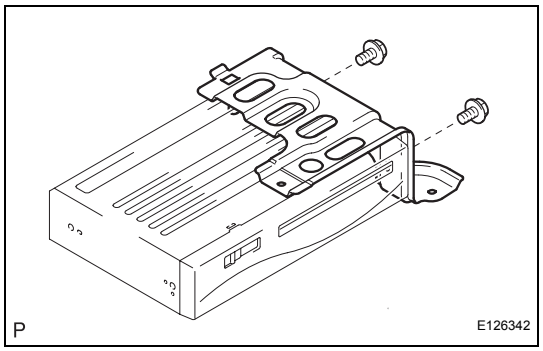

7. REMOVE DISC PLAYER BRACKET

(a) Remove the 2 bolts and disc player bracket.

8. REMOVE NAVIGATION ECU

INSTALLATION

1. **INSTALL NAVIGATION ECU**
2. **INSTALL DISC PLAYER BRACKET**
3. **INSTALL NO.2 DISC PLAYER BRACKET**
4. **INSTALL NAVIGATION COMPUTER WITH BRACKET**
5. **INSTALL NAVIGATION ECU COVER**
6. **INSTALL DISC PLAYER DISC**
7. **INSTALL REAR FLOOR FINISH PLATE**
8. **INSTALL LUGGAGE COMPARTMENT TRIM COVER INNER LH**

NAVIGATION CONTROLLER

COMPONENTS

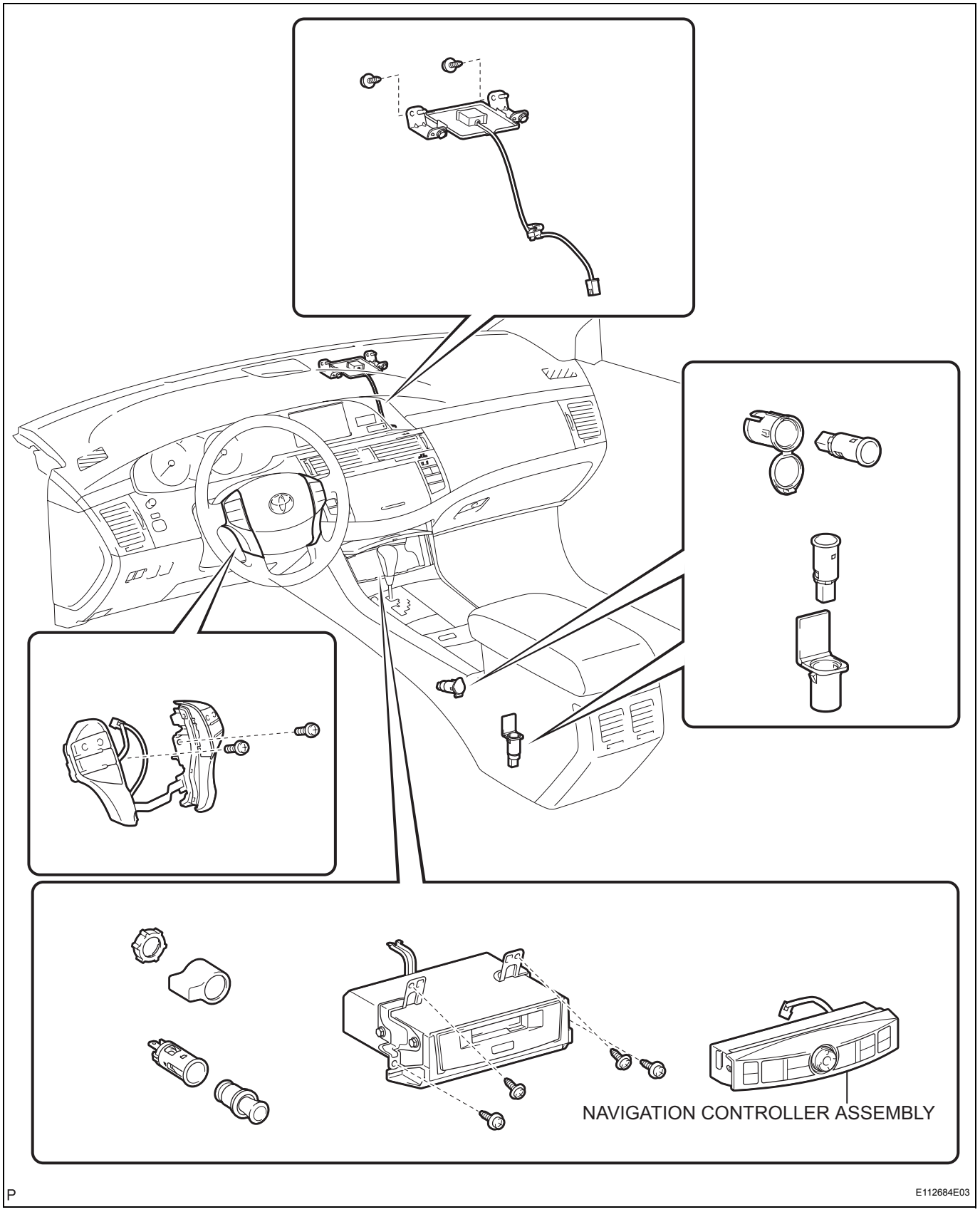

REMOVAL

1. **REMOVE CONSOLE PANEL SUB-ASSEMBLY UPPER (See page IP-13)**

2. **REMOVE NAVIGATION CONTROLLER ASSEMBLY**
   (a) Disengage the 5 claws and remove the navigation controller assembly.

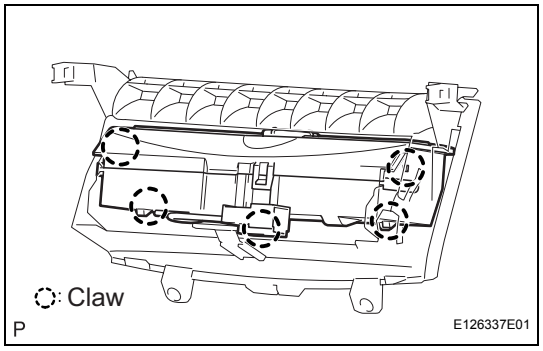

INSTALLATION

1. **INSTALL NAVIGATION CONTROLLER ASSEMBLY**
2. **INSTALL CONSOLE PANEL SUB-ASSEMBLY UPPER**

NAVIGATION ANTENNA

COMPONENTS

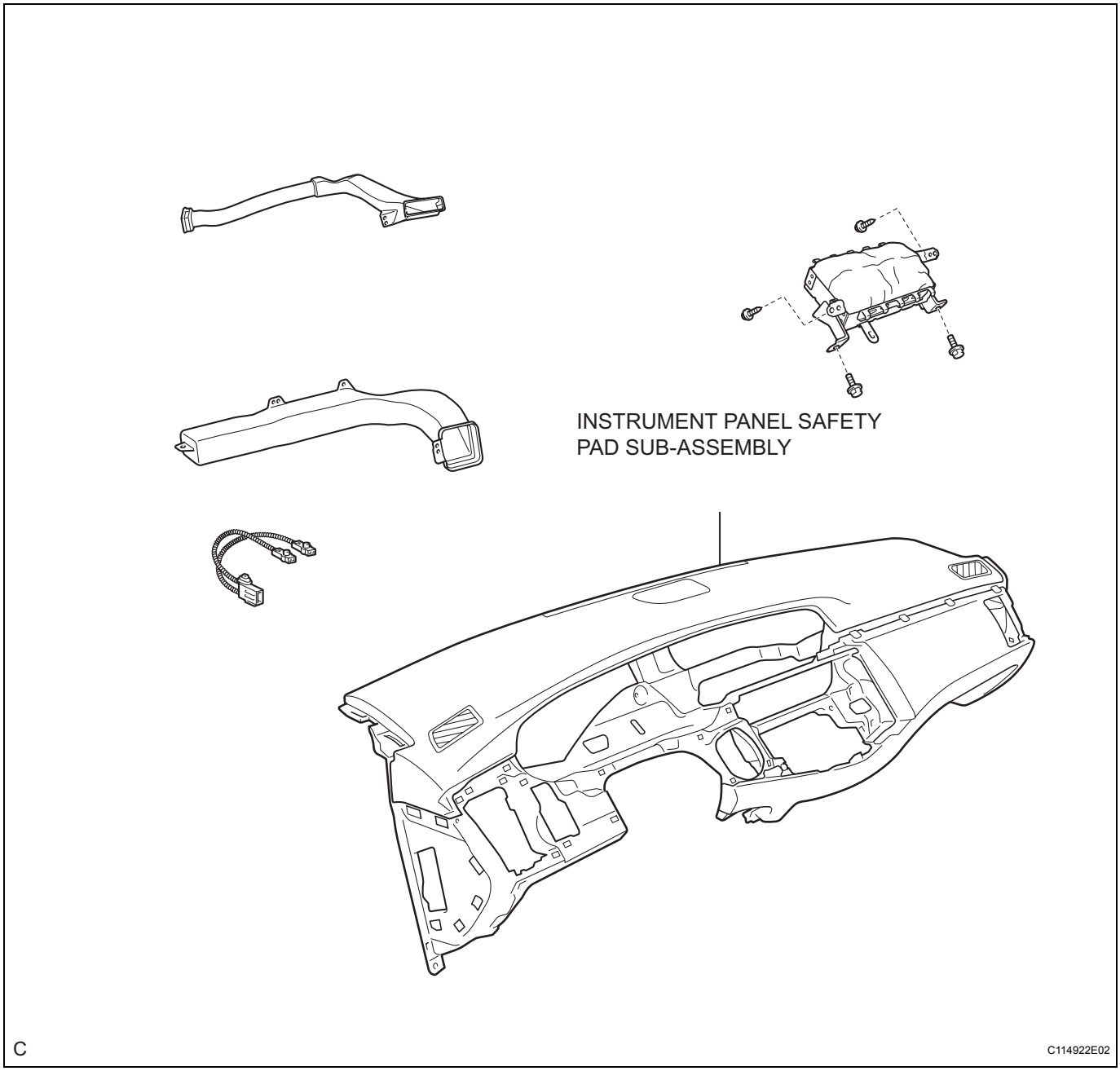

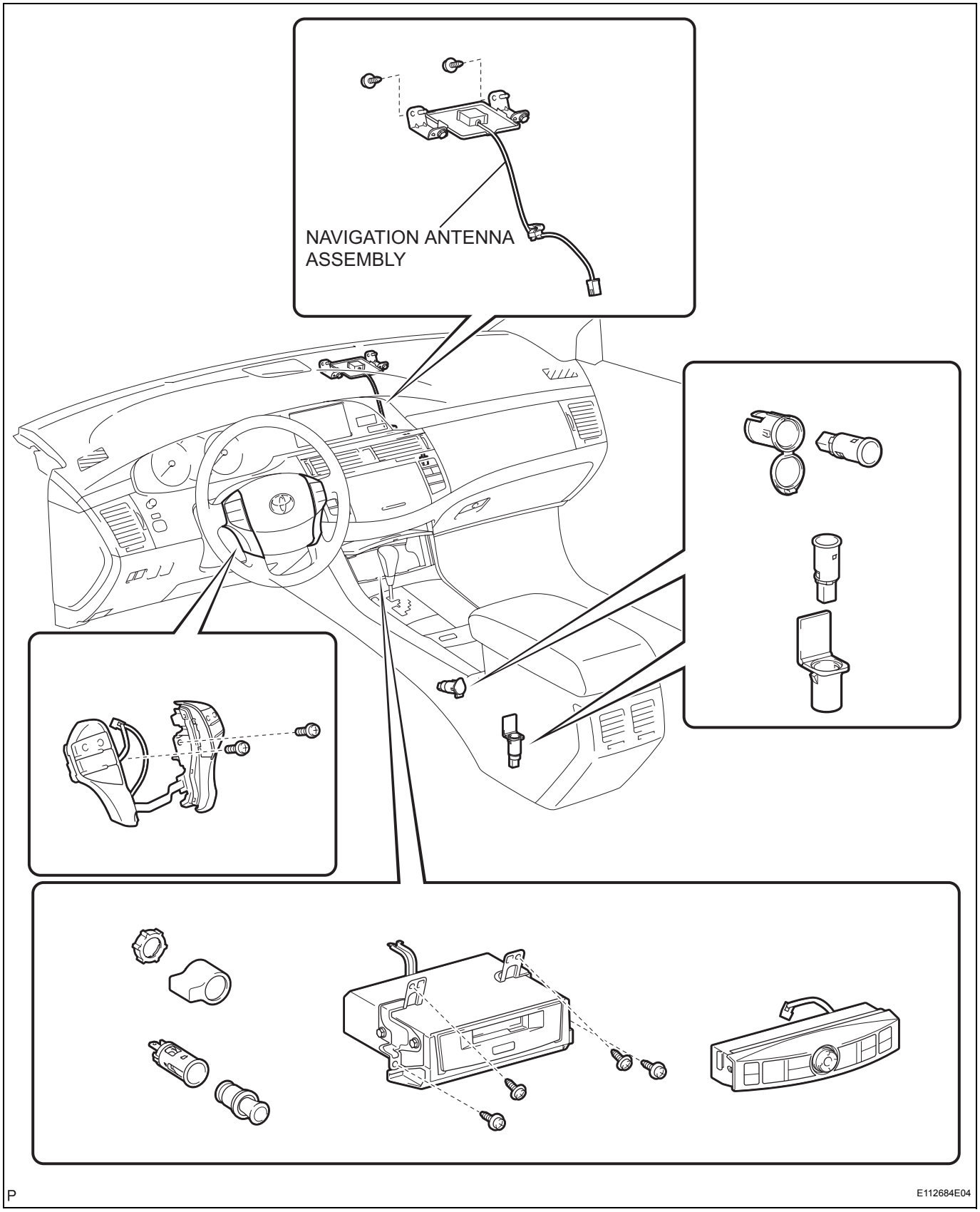
NAVIGATION ANTENNA ASSEMBLY
P
E112684E04

REMOVAL

1. REMOVE INSTRUMENT PANEL SAFETY PAD SUB-ASSEMBLY (w/ Front Passenger Airbag)

HINT:

Refer to the procedures up to the removal of the instrument panel safety pad sub-assembly (w/ front passenger airbag) (See page IP-8).

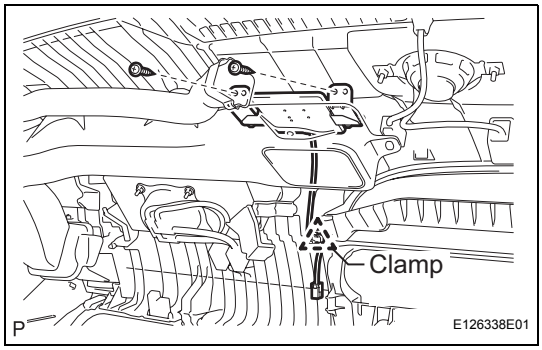

2. REMOVE NAVIGATION ANTENNA ASSEMBLY

(a) Remove the clamp.

(b) Remove the 2 screws and remove the navigation antenna assembly.

INSTALLATION

1. INSTALL NAVIGATION ANTENNA ASSEMBLY
2. INSTALL INSTRUMENT PANEL SAFETY PAD SUB-ASSEMBLY (w/ Front Passenger Airbag) (See page IP-17)
3. ADJUST SPIRAL CABLE
4. INSTALL STEERING WHEEL ASSEMBLY (See page SR-46)
5. INSTALL STEERING PAD (See page RS-305)
6. CONNECT CABLE TO NEGATIVE BATTERY TERMINAL
7. PERFORM SYSTEM INITIALIZE (See page IP-18)
8. INSPECT STEERING PAD (See page RS-315)
9. INSPECT SRS WARNING LIGHT (See page IP-18)

PARKING BRAKE SYSTEM

PROBLEM SYMPTOMS TABLE

Use the table below to help find the cause of the problem. The likely causes are displayed in numerical order. Check each part in order and replace each part if necessary.

PARKING BRAKE SYSTEM

Symptom	Suspected Area	See page
Brake drag	1. Parking brake pedal travel (Out of adjustment)	PB-1
	2. Parking brake wire (Sticking)	PB-12
	3. Parking brake shoe clearance (Out of adjustment)	PB-1
	4. Parking brake shoe (Cracked or distorted)	PB-18
	5. Tension spring (Damaged)	PB-19

ADJUSTMENT

1. **REMOVE REAR WHEEL**
2. **ADJUST PARKING BRAKE SHOE CLEARANCE (See page PB-20)**
3. **INSTALL REAR WHEEL**
   Torque: 103 N*m (1,050 kgf*cm, 76 ft.*lbf)
4. **INSPECT PARKING BRAKE PEDAL TRAVEL**
   (a) Fully depress the parking brake pedal and release it to engage the parking brake.
   (b) Depress the pedal to the floor again, and release it to disengage the parking brake.

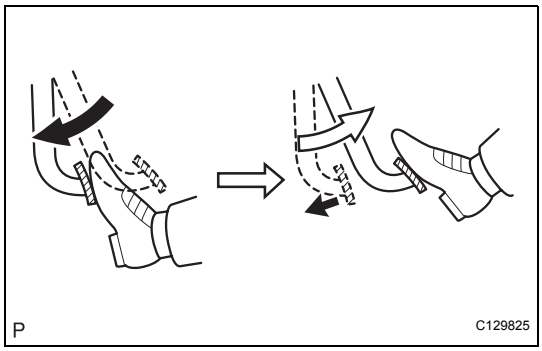

   (c) Slowly depress the parking brake pedal to the floor, and count the number of clicks.
   Parking brake pedal travel:
   9 to 11 notches at 300 N (31 kgf, 67.5 lbf)

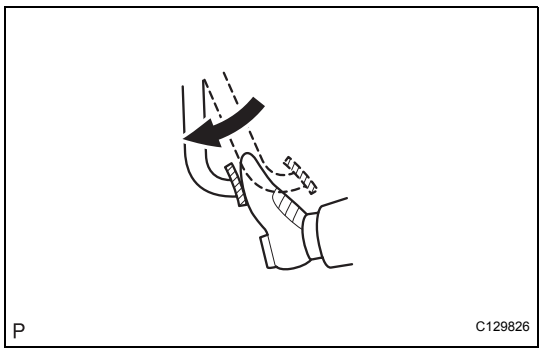

5. **ADJUST PARKING BRAKE PEDAL TRAVEL**
   (a) Depress the parking brake pedal. Hold the wire adjusting nut No.1 using a wrench and loosen the lock nut.
   (b) Release the parking brake pedal.
   (c) Turn the wire adjusting nut No.1 until the parking brake pedal travel meets the above specification.
   (d) Hold the wire adjusting nut No.1 using a wrench or equivalent tool and tighten the lock nut.
   Torque: 5.4 N*m (55 kgf*cm, 48 in.*lbf)
   (e) Count the number of clicks after depressing and releasing the parking brake pedal 3 or 4 times.
   (f) Check whether the parking brake drags or not.
   (g) When operating the parking brake pedal, check that the parking brake indicator light comes on.

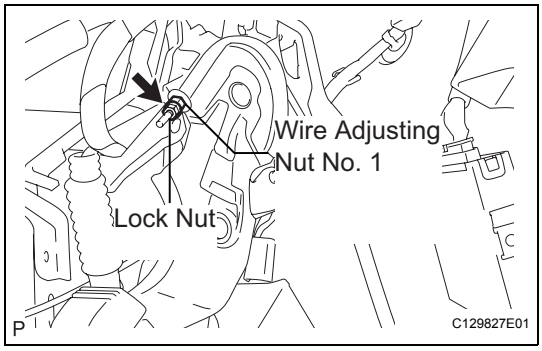

PARKING BRAKE PEDAL

COMPONENTS

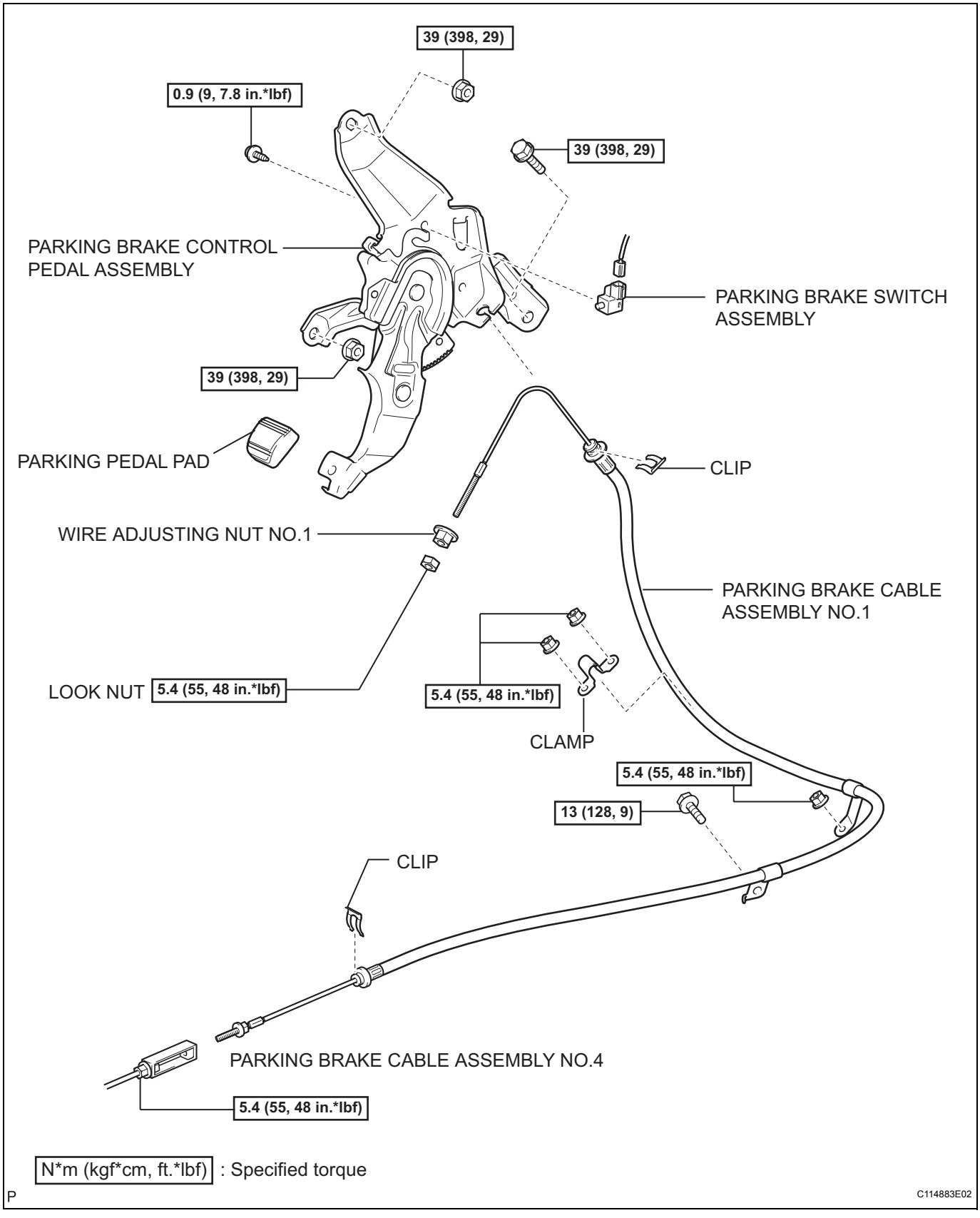

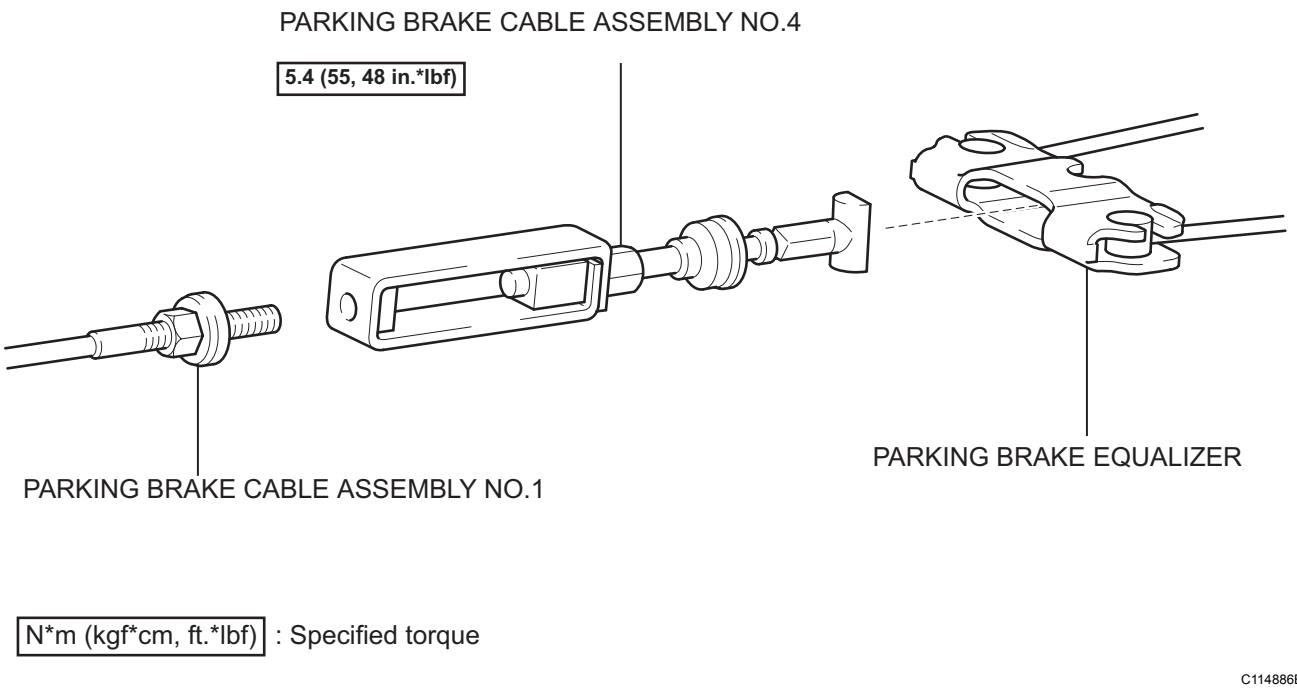

N*m (kgf*cm, ft.*lbf) : Specified torque

P

C114886E02

REMOVAL

1. DISCONNECT BATTERY NEGATIVE TERMINAL (See page RS-303)
2. REMOVE SEAT TRACK BRACKET COVER OUTER FRONT LH (See page SE-50)
3. REMOVE SEAT TRACK BRACKET COVER INNER FRONT LH (See page SE-50)
4. REMOVE FRONT SEAT TRACK COVER LH REAR OUTER (See page SE-50)
5. REMOVE REAR SEAT TRACK BRACKET COVER INNER LH (See page SE-51)
6. REMOVE FRONT LH SEAT ASSEMBLY (See page SE-51)
7. REMOVE FRONT DOOR SCUFF PLATE LH (See page IR-12)
8. REMOVE COWL SIDE TRIM SUB-ASSEMBLY LH (See page IR-12)
9. REMOVE INSTRUMENT SIDE PANEL LH (See page IP-14)
10. REMOVE INSTRUMENT PANEL FINISH LOWER PANEL LH (See page IP-12)
11. REMOVE INSTRUMENT PANEL AIR BAG ASSEMBLY LOWER NO.1
12. REMOVE SHIFT LEVER KNOB SUB-ASSEMBLY (See page IP-12)
13. REMOVE POSITION INDICATOR HOUSING ASSEMBLY (See page IP-12)
14. REMOVE CONSOLE BOX UPPER
15. REMOVE CONSOLE PANEL SUB-ASSEMBLY UPPER
16. REMOVE CONSOLE BOX ASSEMBLY (See page IP-13)
17. REMOVE CONSOLE BOX FRONT (See page IP-14)
18. REMOVE CONSOLE BOX DUCT NO.1
19. REMOVE TRANSMISSION FLOOR SHIFT ASSEMBLY
20. REMOVE SHIFT & SELECT LEVER SUPPORT
    (a) Remove the 4 bolts and shift & select lever support from the body.

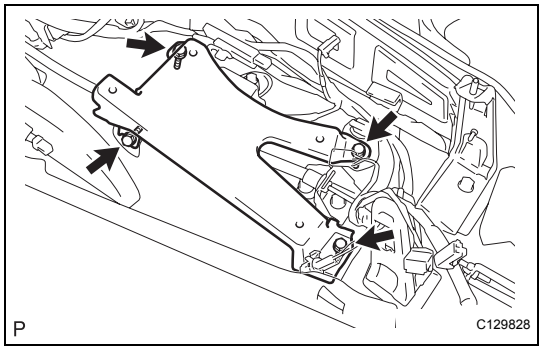

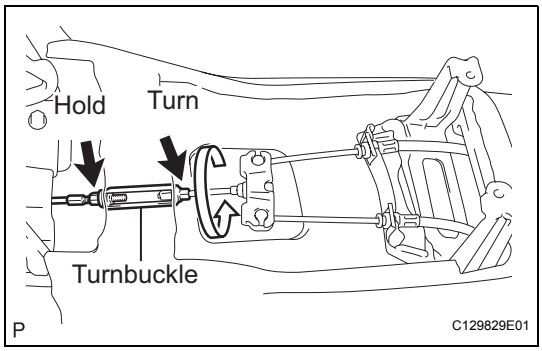

21. DISCONNECT PARKING BRAKE CABLE ASSEMBLY NO.4

(a) Release the parking brake.

(b) Hold the nut on the parking brake cable assembly No.1 using a wrench. Loosen and disconnect the turnbuckle of the parking brake cable assembly No.4 from the parking brake cable assembly No.1 using a wrench.

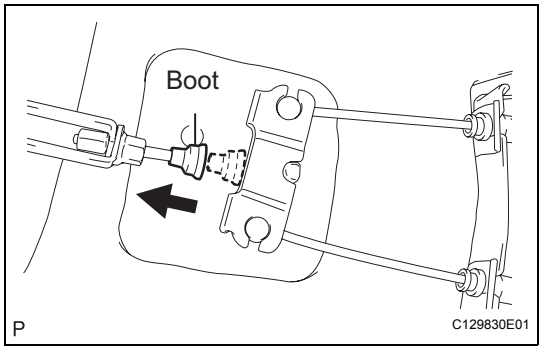

(c) Slide the boot as shown in the illustration.

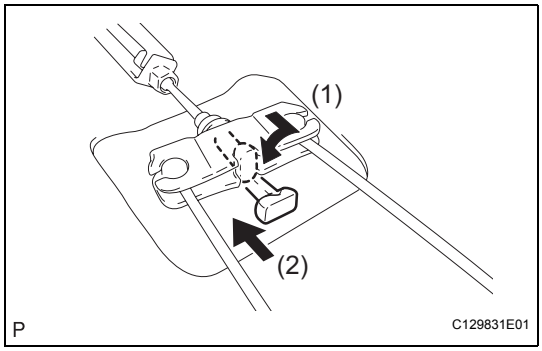

(d) Remove the parking brake cable assembly No.4 from the parking brake equalizer as shown in the illustration.

22. REMOVE PARKING BRAKE CONTROL PEDAL ASSEMBLY

(a) Remove the clip and separate the parking brake cable assembly No.1 from the cable support bracket.

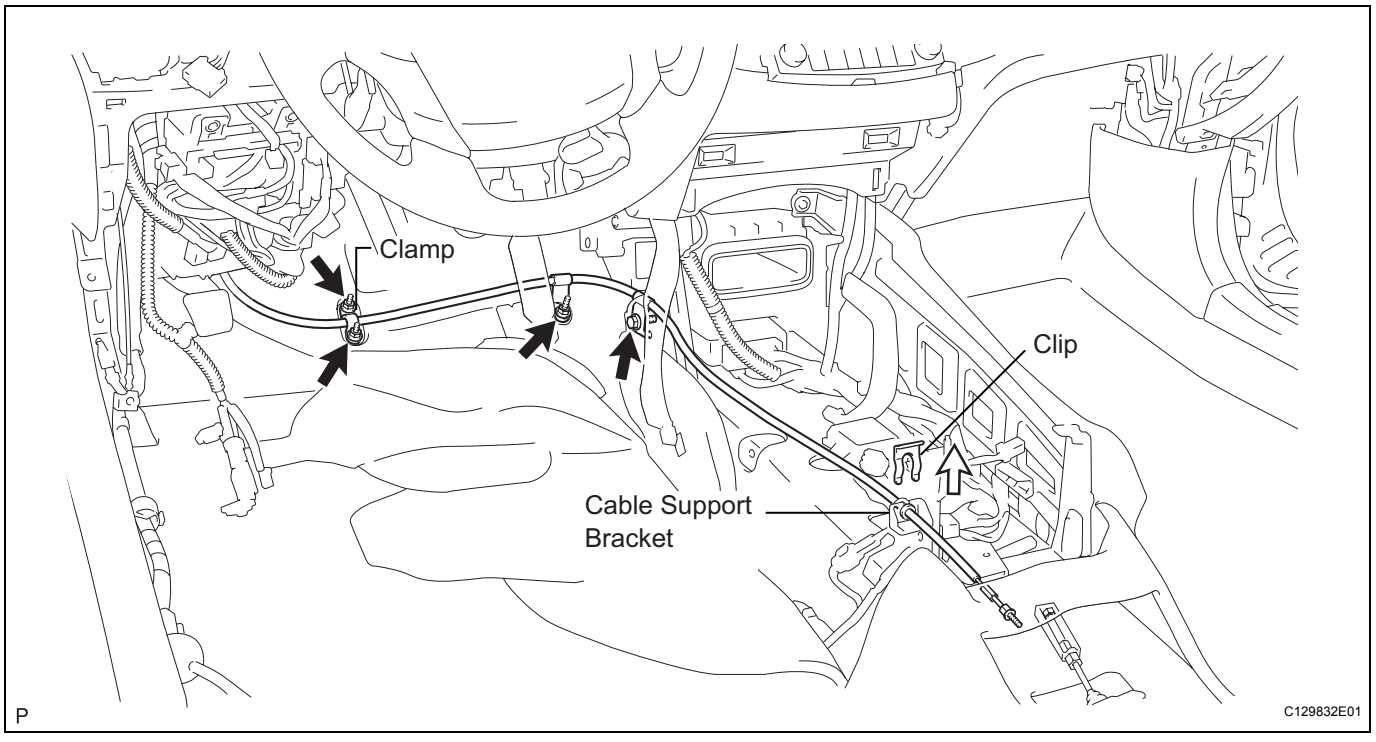

(b) Remove the bolt, 3 nuts and clamp, and separate the parking brake cable assembly No.1 from the body.

(c) Disconnect the connector.

(d) Remove the bolt, 2 nuts and parking brake control pedal assembly from the body.

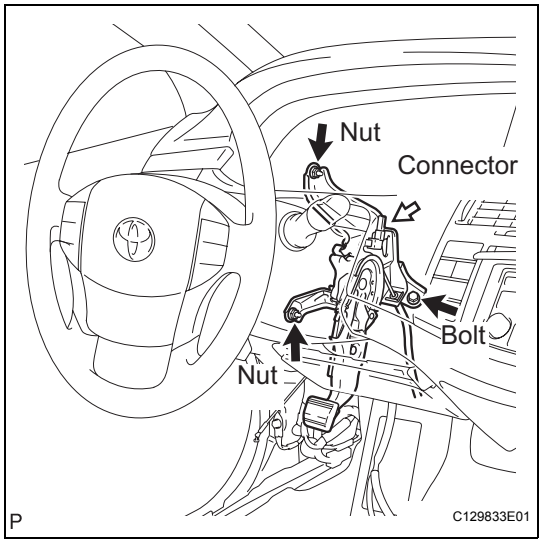

DISASSEMBLY

1. REMOVE PARKING PEDAL PAD

(a) Disengage the claw and remove the parking pedal pad from the parking brake control pedal assembly.

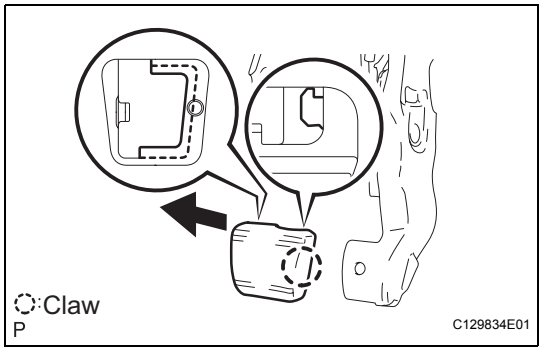

2. REMOVE PARKING BRAKE SWITCH ASSEMBLY

(a) Remove the screw and parking brake switch assembly from the parking brake control pedal assembly.

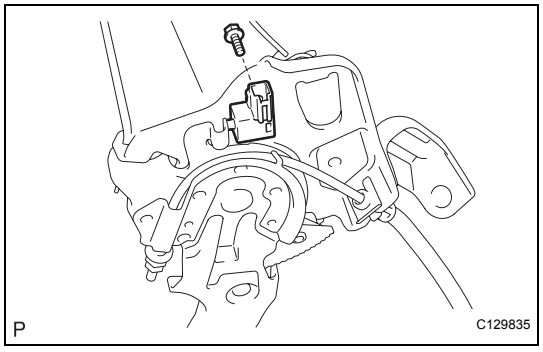

3. REMOVE PARKING BRAKE CABLE ASSEMBLY NO.1

(a) Pull up the parking brake pedal claw.

(b) Remove the lock nut and wire adjusting nut No.1 of the parking brake cable assembly No.1 from the parking brake pedal assembly.

(c) Remove the clip and parking brake cable assembly No.1 from the parking brake control pedal assembly.

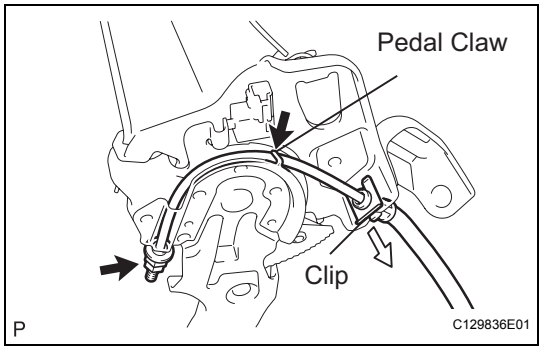

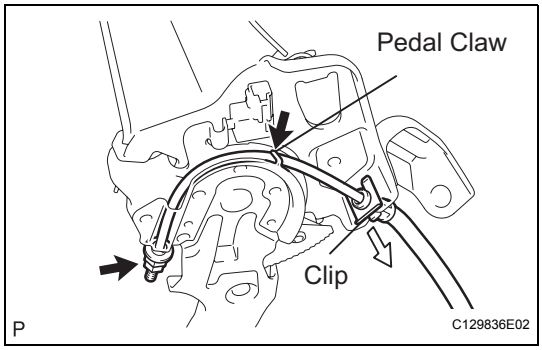

REASSEMBLY

1. INSTALL PARKING BRAKE CABLE ASSEMBLY NO.1

(a) Pass the parking brake cable assembly No.1 through the parking brake control pedal and hold the cable with the clip.

(b) Pass the parking brake cable through the pedal guide. Temporarily tighten the wire adjusting nut No.1 and lock nut.
HINT:
Fully tighten the wire adjusting nut No.1 and lock nut when adjusting the parking brake pedal free play.

(c) Fully bend the parking brake pedal claw.

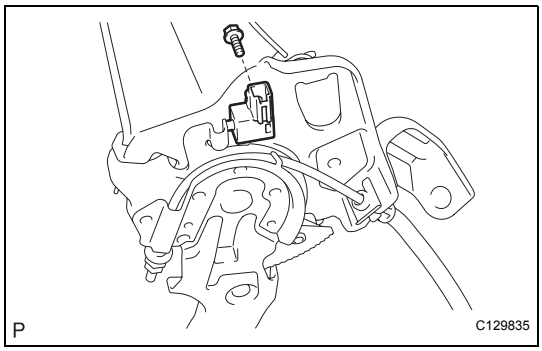

2. INSTALL PARKING BRAKE SWITCH ASSEMBLY

(a) Install the parking brake switch assembly with the screw.
Torque: 0.9 N*m (9 kgf*cm, 7.8 in.*lbf)

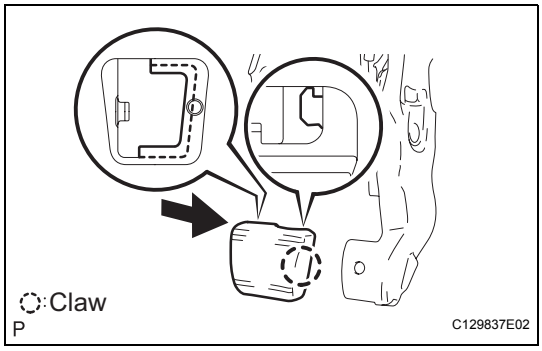

3. INSTALL PARKING PEDAL PAD

(a) Engine the claw and install the parking pedal pad on the parking brake control pedal assembly.

INSTALLATION

1. INSTALL PARKING BRAKE CONTROL PEDAL ASSEMBLY

(a) Install the parking brake control pedal assembly with the bolt and 2 nuts.
Torque: Bolt
39 N*m (398 kgf*cm, 29 ft.*lbf)
Nut
39 N*m (398 kgf*cm, 29 ft.*lbf)

(b) Connect the connector to the parking brake switch assembly.

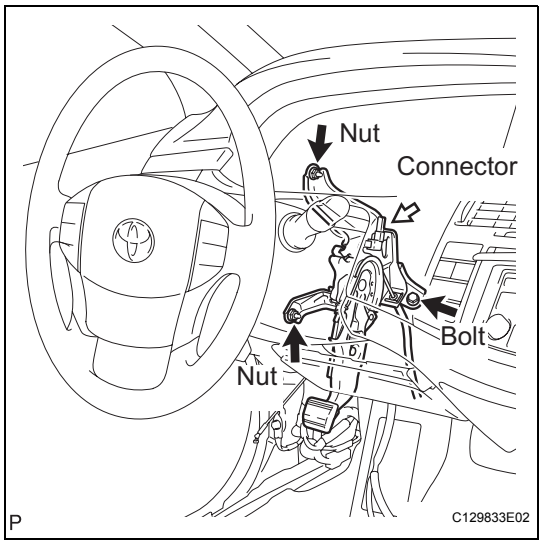

(c) Install the parking brake cable assembly No.1 to the body with the clamp, 3 nuts and bolt.

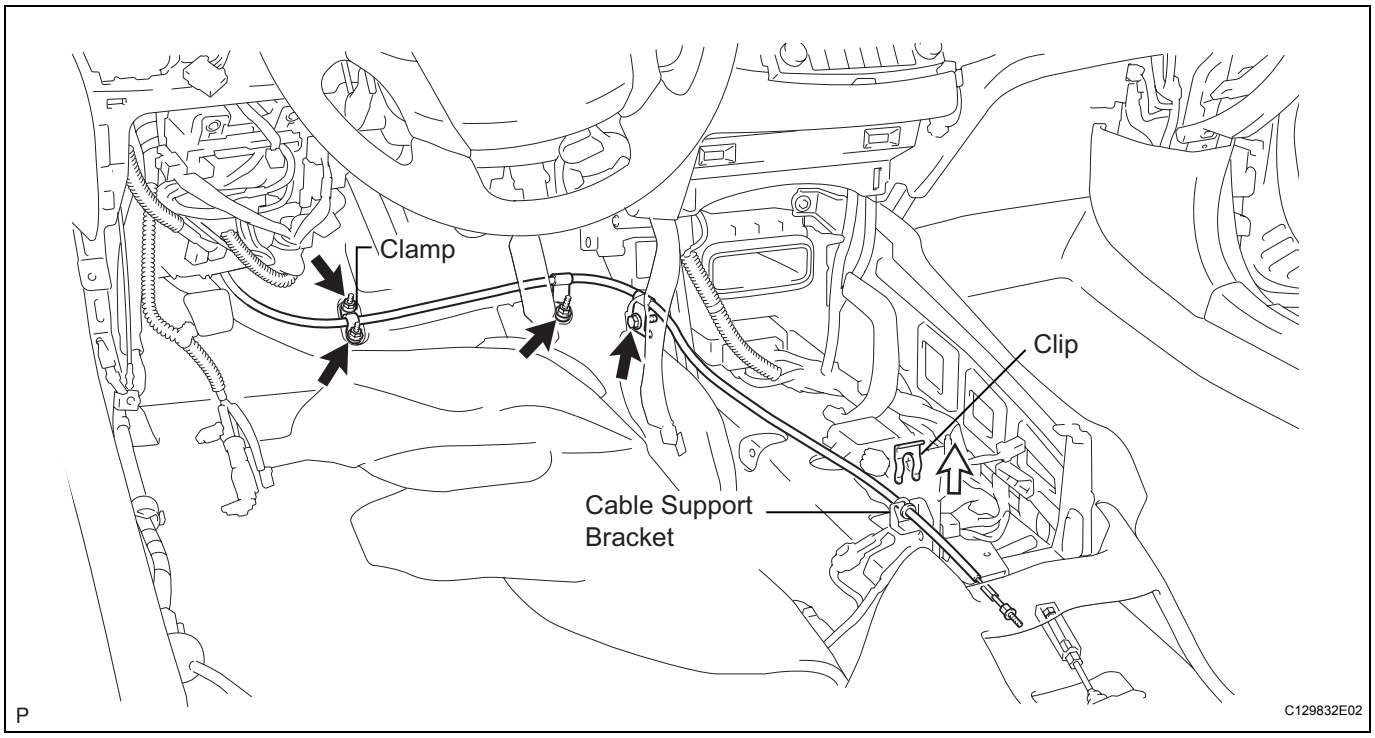

Torque: Bolt
13 N*m (128 kgf*cm, 9 ft.*lbf)
Nut
5.4 N*m (55 kgf*cm, 48 ft.*lbf)

(d) Install the parking brake cable assembly No.1 to the cable support bracket with the clip.

2. INSTALL PARKING BRAKE CABLE ASSEMBLY NO.4

(a) Install the parking brake cable assembly No.4 to the parking brake equalizer as shown in the illustration.

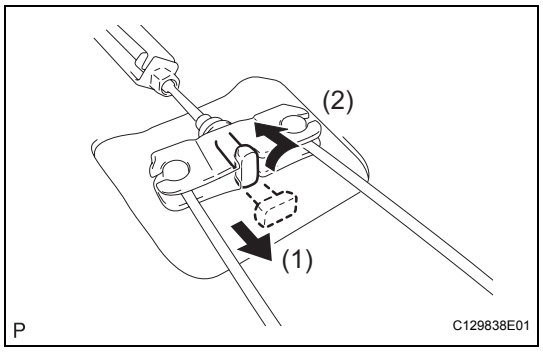

(b) Slide the boot back as shown in the illustration.

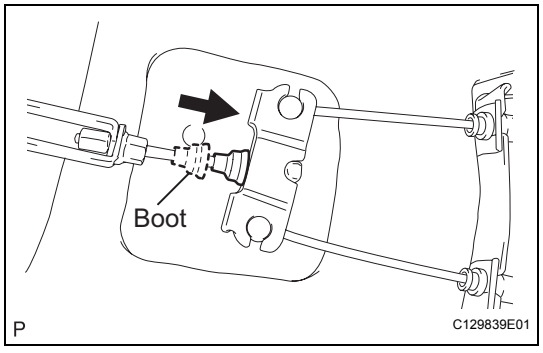

PB

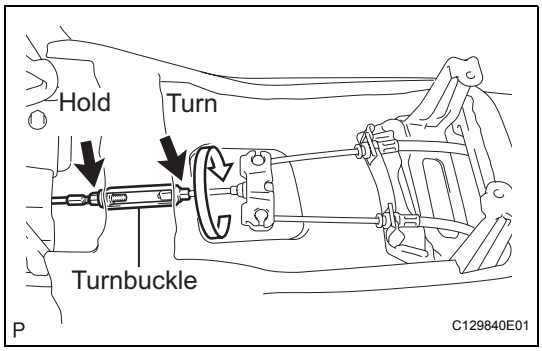

(c) Hold the nut on the parking brake cable assembly No.1 using a wrench. Tighten the turnbuckle of the parking brake cable assembly No.4 using a wrench.
Torque: 5.4 N*m (55 kgf*cm, 48 in.*lbf)

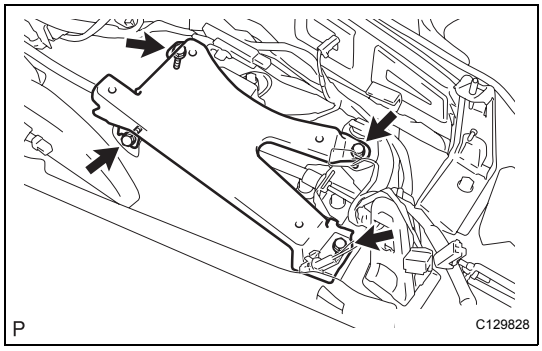

3. **INSTALL SHIFT & SELECT LEVER SUPPORT**
   (a) Install the shift & select lever support to the body with the 4 bolts.
4. **INSTALL TRANSMISSION FLOOR SHIFT ASSEMBLY**
5. **INSTALL CONSOLE BOX DUCT NO.1**
6. **INSTALL CONSOLE BOX FRONT**
7. **INSTALL CONSOLE BOX ASSEMBLY**
8. **INSTALL CONSOLE PANEL SUB-ASSEMBLY UPPER**
9. **INSTALL CONSOLE BOX UPPER**
10. **INSTALL POSITION INDICATOR HOUSING ASSEMBLY**
11. **INSTALL SHIFT LEVER KNOB SUB-ASSEMBLY**
12. **INSTALL INSTRUMENT PANEL AIR BAG ASSEMBLY LOWER NO.1**
13. **INSTALL INSTRUMENT PANEL FINISH LOWER PANEL LH**
14. **INSTALL INSTRUMENT SIDE PANEL LH**
15. **INSTALL COWL SIDE TRIM SUB-ASSEMBLY LH**
16. **INSTALL FRONT DOOR SCUFF PLATE LH**
17. **INSTALL FRONT LH SEAT ASSEMBLY (See page SE-63)**
18. **INSTALL REAR SEAT TRACK BRACKET COVER INNER LH**
19. **INSTALL FRONT SEAT TRACK COVER LH REAR OUTER**
20. **INSTALL SEAT TRACK BRACKET COVER INNER FRONT LH**
21. **INSTALL SEAT TRACK BRACKET COVER OUTER FRONT LH**
22. **CONNECT BATTERY NEGATIVE TERMINAL**
23. **PERFORM INITIALIZATION (See page RS-306)**
24. **INSPECT SRS WARNING LIGHT (See page RS-306)**

25. INSPECT AND ADJUST PARKING BRAKE PEDAL TRAVEL (See page PB-2)

PARKING BRAKE CABLE

COMPONENTS

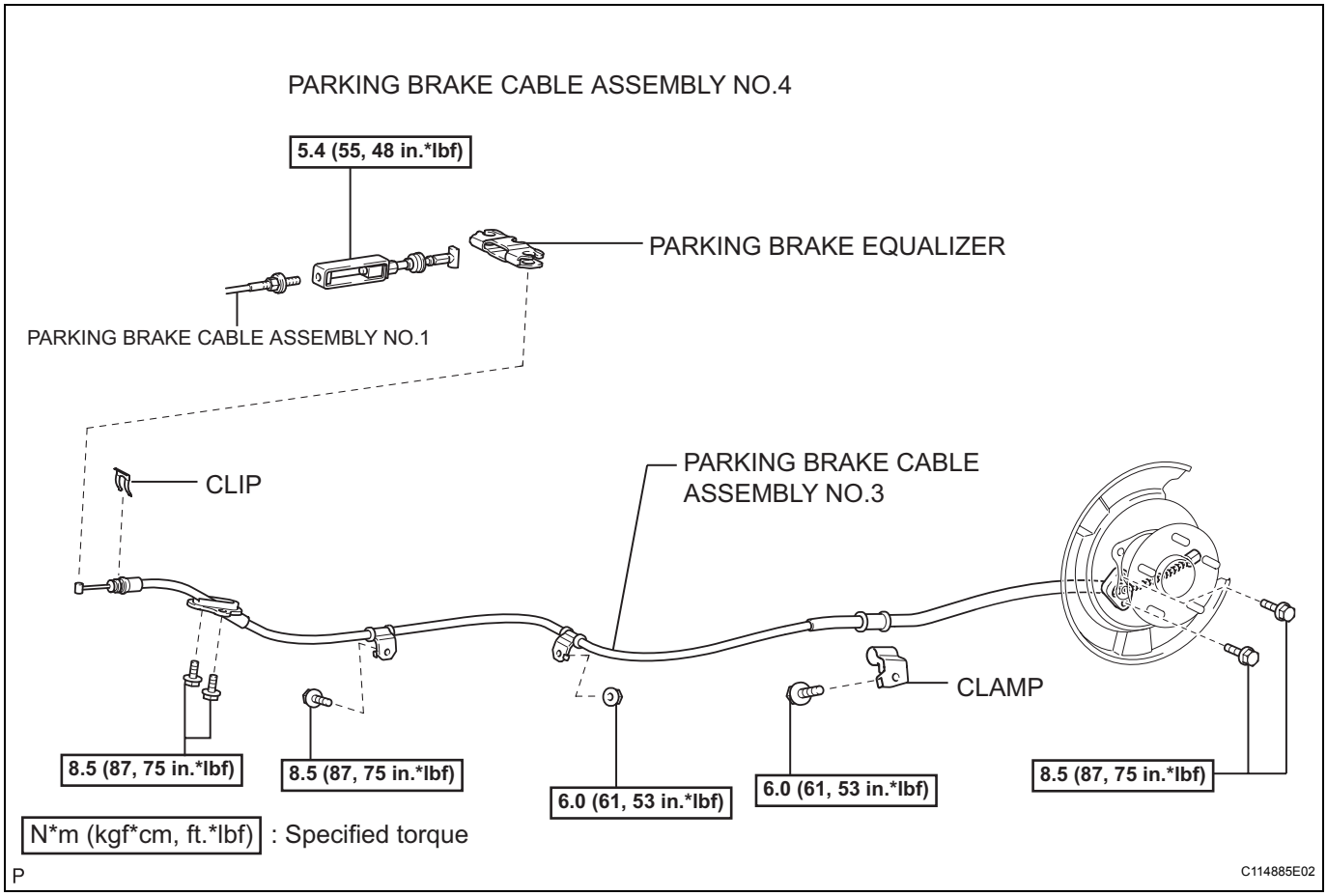

REMOVAL

HINT:
Replace the parking brake cable assembly No.2 using the same procedures as for the parking brake cable assembly No.3.

1. **REMOVE REAR WHEEL**
2. **SEPARATE REAR DISC BRAKE CALIPER ASSEMBLY LH (See page AH-19)**
3. **REMOVE REAR DISC**
4. **REMOVE PARKING BRAKE SHOE RETURN TENSION SPRING (See page PB-17)**
5. **REMOVE PARKING BRAKE SHOE STRUT LH (See page PB-17)**
6. **REMOVE PARKING BRAKE SHOE (See page PB-18)**
7. **REMOVE SHIFT LEVER KNOB SUB-ASSEMBLY (See page IP-12)**
8. **REMOVE POSITION INDICATOR HOUSING ASSEMBLY (See page IP-12)**
9. **REMOVE CONSOLE BOX UPPER**
10. **REMOVE CONSOLE PANEL SUB-ASSEMBLY UPPER**
11. **REMOVE CONSOLE BOX ASSEMBLY (See page IP-13)**
12. **DISCONNECT PARKING BRAKE CABLE ASSEMBLY NO.4 (See page PB-5)**
13. **REMOVE PARKING BRAKE CABLE ASSEMBLY NO.3**
    (a) Removal the clip and separate the parking brake cable assembly No.3 from the parking brake equalizer.

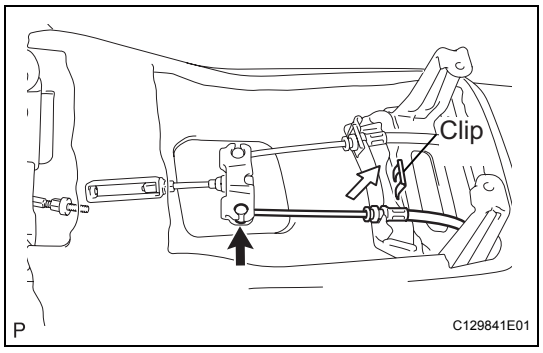

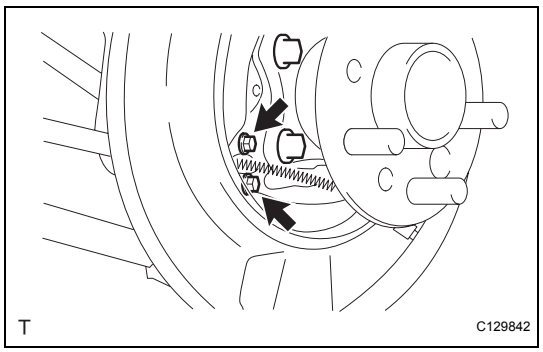

(b) Remove the 2 bolts and separate the parking brake cable assembly No.3 from the backing plate.

PB

(c) Remove the 4 bolts and nut shown in the illustration, then remove the parking brake cable assembly No.3.

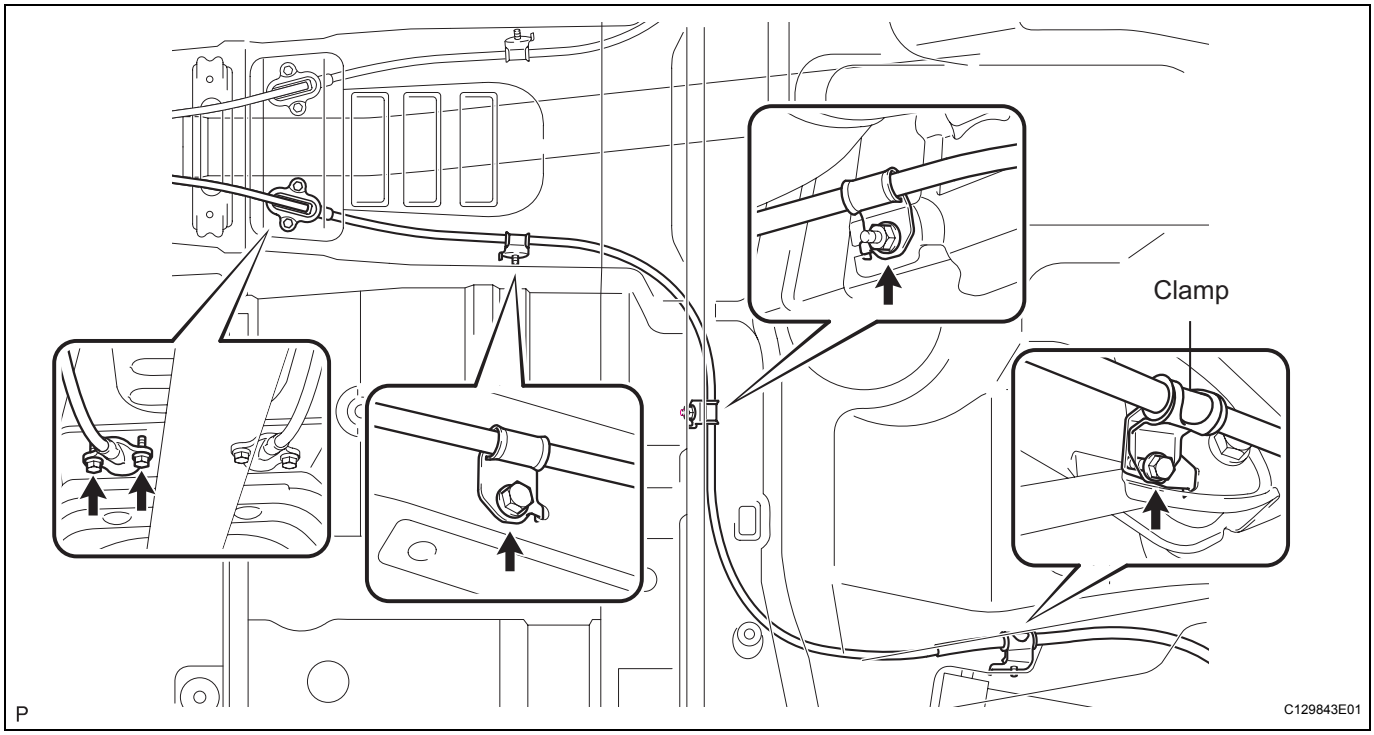

(d) Remove the clamp from the parking brake cable assembly No.3.

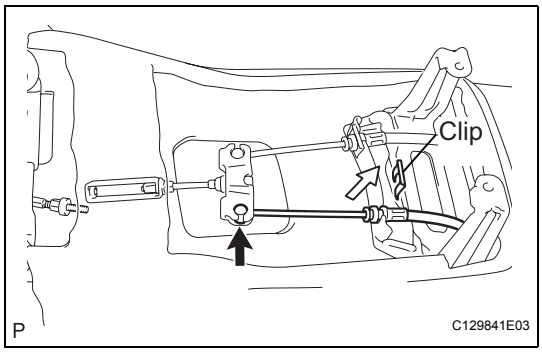

INSTALLATION

1. INSTALL PARKING BRAKE CABLE ASSEMBLY NO.3

(a) Connect the parking brake cable assembly No.3 to the parking brake equalizer.

(b) Fix the parking brake cable assembly No.3 with the clip.

(c) Install the parking brake cable assembly No.3 with the bolts, nut and clamp as shown in the illustration.

Torque: Bolt A
8.5 N*m (87 kgf*cm, 75 in.*lbf)
Bolt B
6.0 N*m (61 kgf*cm, 53 in.*lbf)
Nut
6.0 N*m (61 kgf*cm, 53 in.*lbf)

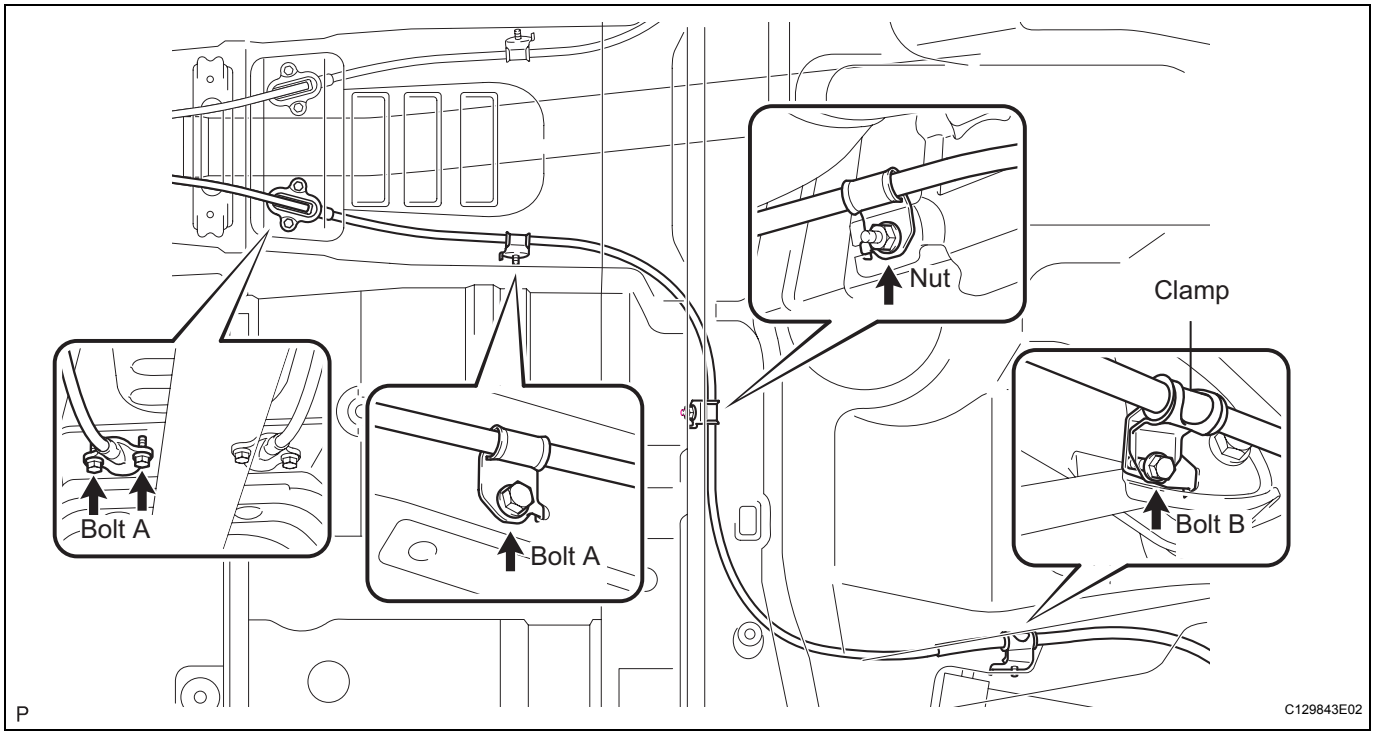

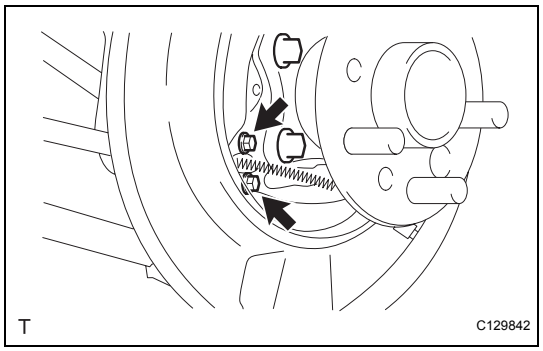

(d) Connect the parking brake cable assembly No.3 to the backing plate with the 2 bolts.
Torque: 8.0 N*m (82 kgf*cm, 71 in.*lbf)

2. **APPLY HIGH TEMPERATURE GREASE (See page PB-19)**
3. **INSTALL PARKING BRAKE SHOE (See page PB-19)**
4. **INSTALL PARKING BRAKE SHOE STRUT LH (See page PB-19)**
5. **INSTALL PARKING BRAKE SHOE RETURN TENSION SPRING (See page PB-19)**
6. **CHECK PARKING BRAKE INSTALLATION (See page PB-20)**
7. **INSTALL REAR DISC (See page PB-20)**
8. **ADJUST PARKING BRAKE SHOE CLEARANCE (See page PB-20)**
9. **INSTALL REAR DISC BRAKE CALIPER ASSEMBLY LH (See page PB-21)**
10. **INSTALL REAR WHEEL**
Torque: 103 N*m (1,050 kgf*cm, 76 ft.*lbf)
11. **INSTALL PARKING BRAKE CABLE ASSEMBLY NO.4 (See page PB-9)**
12. **INSTALL CONSOLE BOX ASSEMBLY**
13. **INSTALL CONSOLE PANEL SUB-ASSEMBLY UPPER**
14. **INSTALL CONSOLE BOX UPPER**
15. **INSTALL POSITION INDICATOR HOUSING ASSEMBLY**

16. **INSTALL SHIFT LEVER KNOB SUB-ASSEMBLY**
17. **INSPECT AND ADJUST PARKING BRAKE PEDAL TRAVEL (See page PB-2)**

PARKING BRAKE ASSEMBLY

COMPONENTS

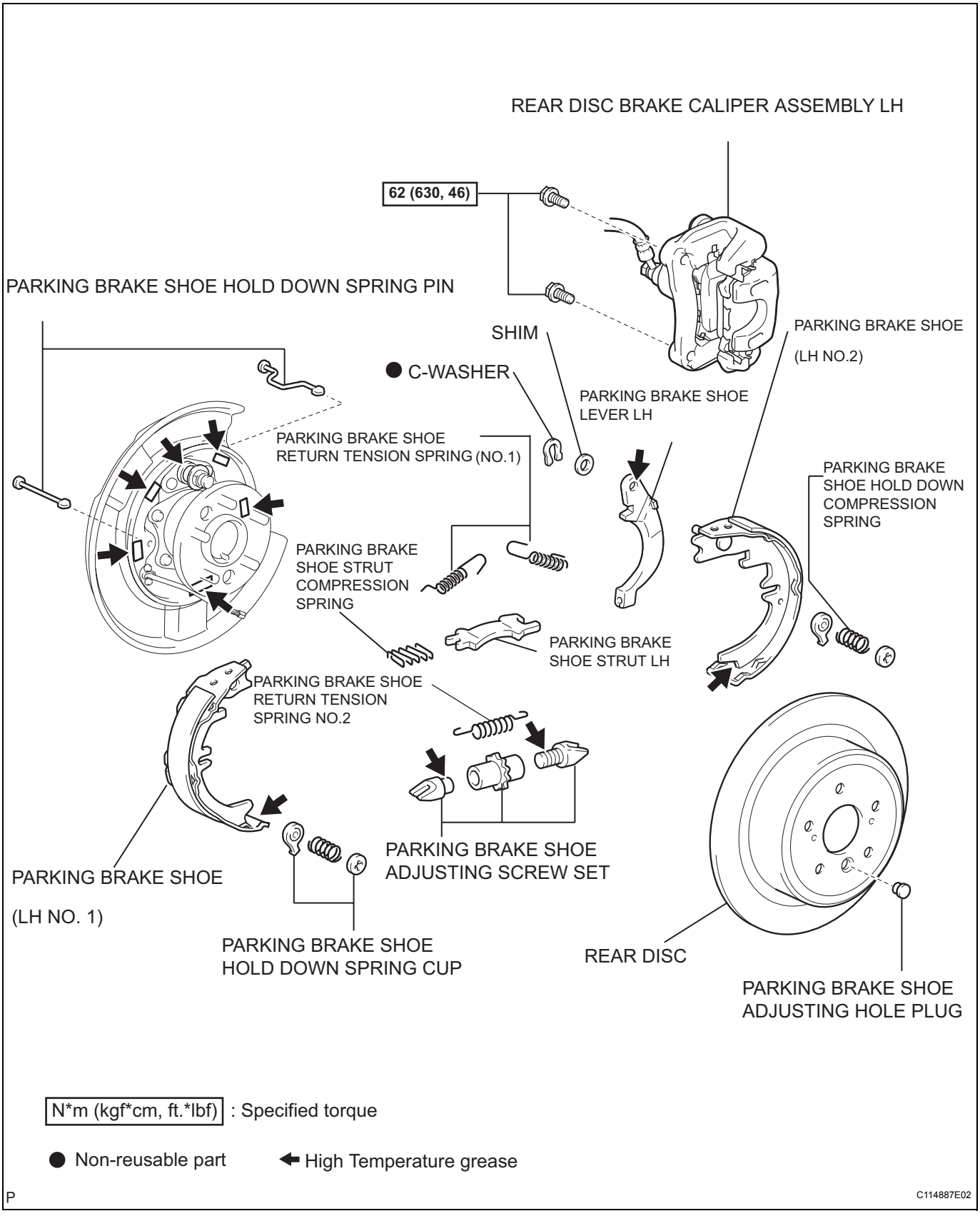

PB

DISASSEMBLY

1. REMOVE REAR WHEEL

2. SEPARATE REAR DISC BRAKE CALIPER ASSEMBLY LH

(a) Remove the 2 bolts and separate the rear disc brake caliper assembly LH.
HINT:
Do not disconnect the flexible hose from the disc brake caliper assembly LH.

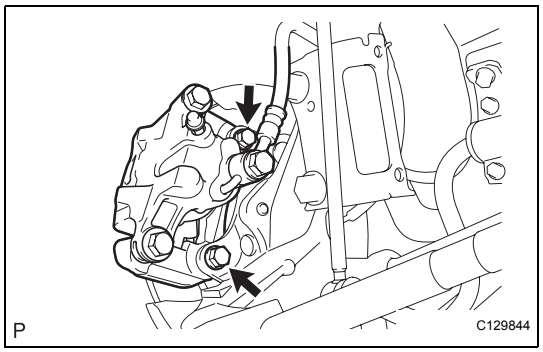

3. REMOVE REAR DISC

(a) Release the parking brake.
(b) Put matchmarks on the rear disc and the axle hub.

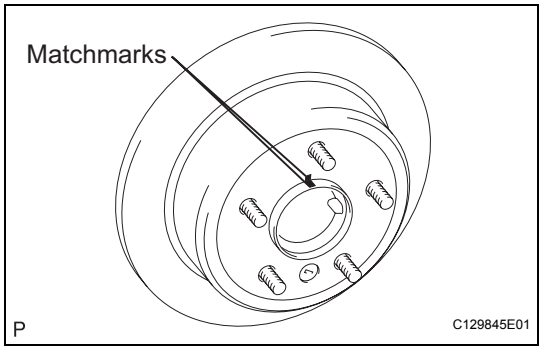

(c) Remove the rear disc.
HINT:
If the disc cannot be removed easily, turn the shoe adjuster until the wheel turns freely.

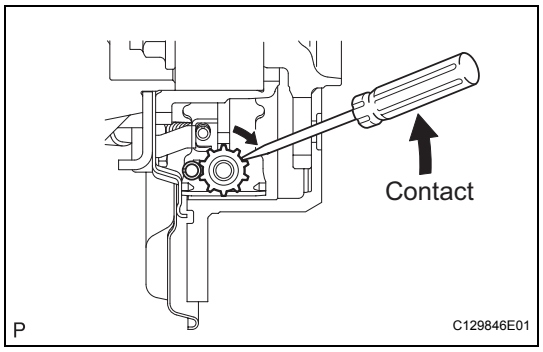

4. REMOVE PARKING BRAKE SHOE RETURN TENSION SPRING

(a) Using needle-nose pliers, remove the 2 return tension springs No.1.

5. REMOVE PARKING BRAKE SHOE STRUT LH

(a) Remove the parking brake shoe strut LH and strut compression spring.

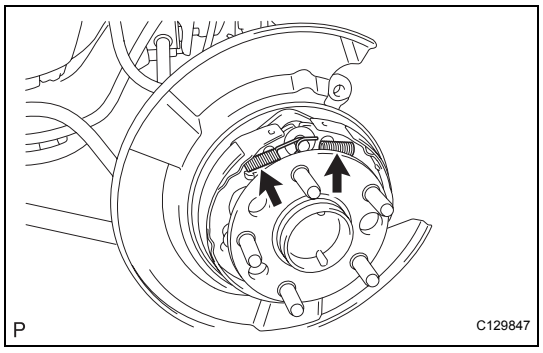

PB

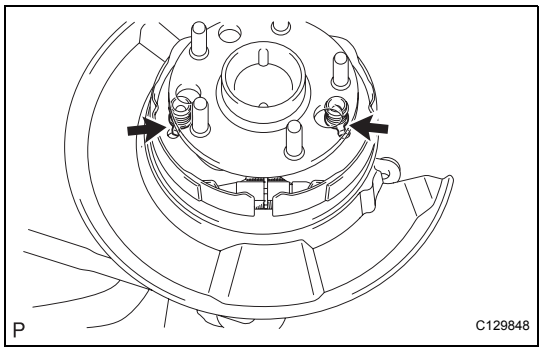

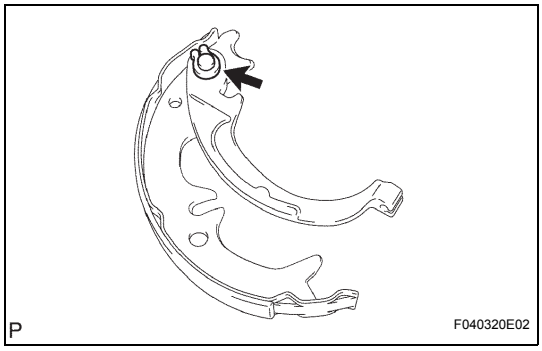

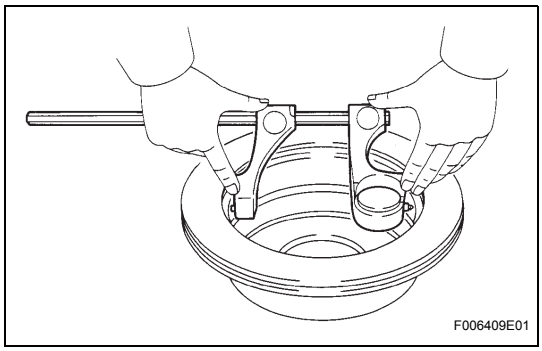

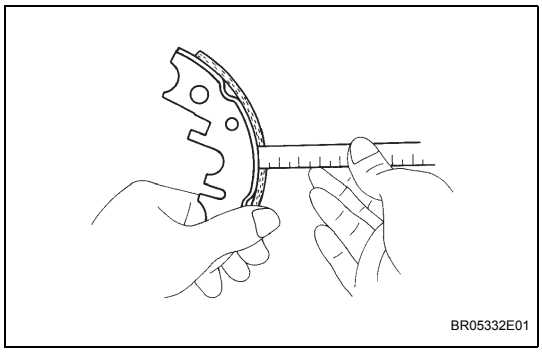

6. REMOVE PARKING BRAKE SHOE

(a) Release the spring cup claw and remove the parking brake shoe assembly LH No.2 and No.1.
(b) Disconnect the parking brake cable assembly No.3 from the shoe lever.
(c) Remove the return tension spring No.2 and adjusting screw set from the parking brake shoe assembly LH No.2 and No.1
(d) Remove the 2 hold down compression springs, 4 hold down spring cups and 2 hold down spring pins.
(e) Using a screwdriver, remove the C-washer.
(f) Remove the shim and shoe lever from the parking brake shoe assembly LH No. 2.

INSPECTION

1. INSPECT BRAKE DISC INSIDE DIAMETER

(a) Using a brake drum gauge or equivalent tool, measure the inside diameter of the rear disc.
Standard inside diameter:
170 mm (6.69 in.)
Maximum inside diameter:
171 mm (6.73 in.)
If the inside diameter exceeds the maximum, replace the brake disc.

2. INSPECT PARKING BRAKE SHOE LINING THICKNESS

(a) Using a ruler, measure the thickness of the shoe lining.
Standard thickness:
2.0 mm (0.079 in.)
Minimum thickness:
1.0 mm (0.039 in.)
If the lining thickness is less than the minimum, or if there is severe or uneven wear, replace the brake shoe.
NOTICE:
Replace both the right and left parking brake shoes as a set.

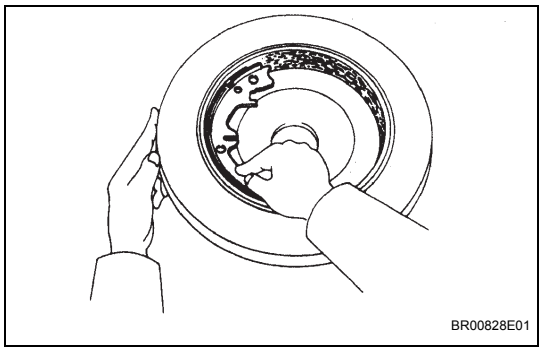

3. INSPECT BRAKE DISC AND PARKING BRAKE SHOE LINING FOR PROPER CONTACT

(a) Apply chalk to the inside surface of the disc, then grind down the brake shoe lining to fit the disc.
If the contact between the disc and the brake shoe lining is improper, repair it using a brake shoe grinder or replace the brake shoe.

REASSEMBLY

1. APPLY HIGH TEMPERATURE GREASE

(a) Apply high temperature grease to the backing plate which makes contact with the shoe (See page PB-16).

2. INSTALL PARKING BRAKE SHOE

(a) Install the shoe lever and shim to the parking brake shoe assembly LH No.2 with a new C-washer.

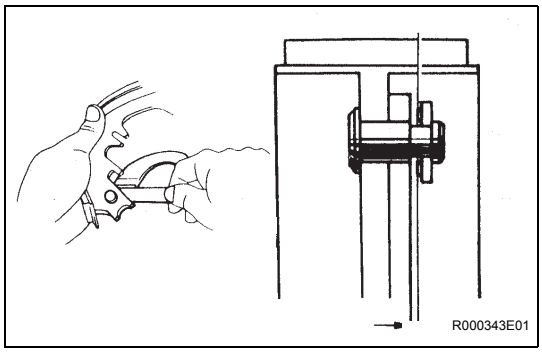

(b) Using a feeler gauge, measure the clearance.
Standard clearance:
Less than 0.35 mm (0.0138 in.)
If the clearance is not within the specification, replace the shim with one of the correct size.

Shim Thickness	Shim Thickness
0.3 mm (0.012 in.)	0.9 mm (0.035 in.)
0.6 mm (0.024 in.)	-

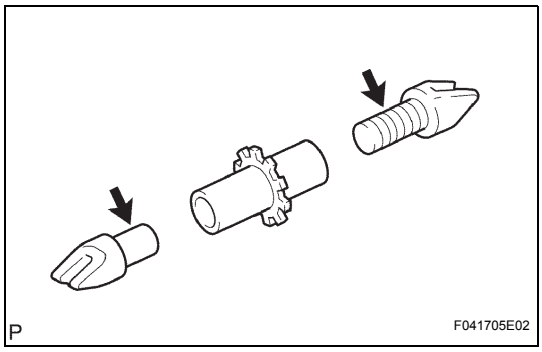

(c) Apply high temperature grease to the adjusting screw set.
(d) Install the adjusting screw set and return tension spring No.2 to the parking brake shoe assembly LH No.1 and No.2.
(e) Install the 2 hold down spring pins, 4 hold down spring cups and 2 hold down compression springs.
(f) Connect the parking brake cable assembly No.3 to the shoe lever.
(g) Install the parking brake shoe assembly LH No.1 and No.2.

3. INSTALL PARKING BRAKE SHOE STRUT LH

(a) Attach the parking brake shoe strut LH and strut compression spring to the parking brake shoe assembly LH NO.2 and NO.1.

4. INSTALL PARKING BRAKE SHOE RETURN TENSION SPRING

(a) Using needle-nose pliers, install the 2 return tension springs No.1.
HINT:
Install the front side spring before the rear side spring.

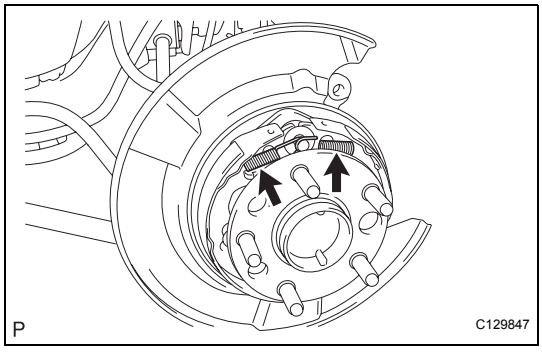

5. CHECK PARKING BRAKE INSTALLATION

(a) Check that each part is installed properly.

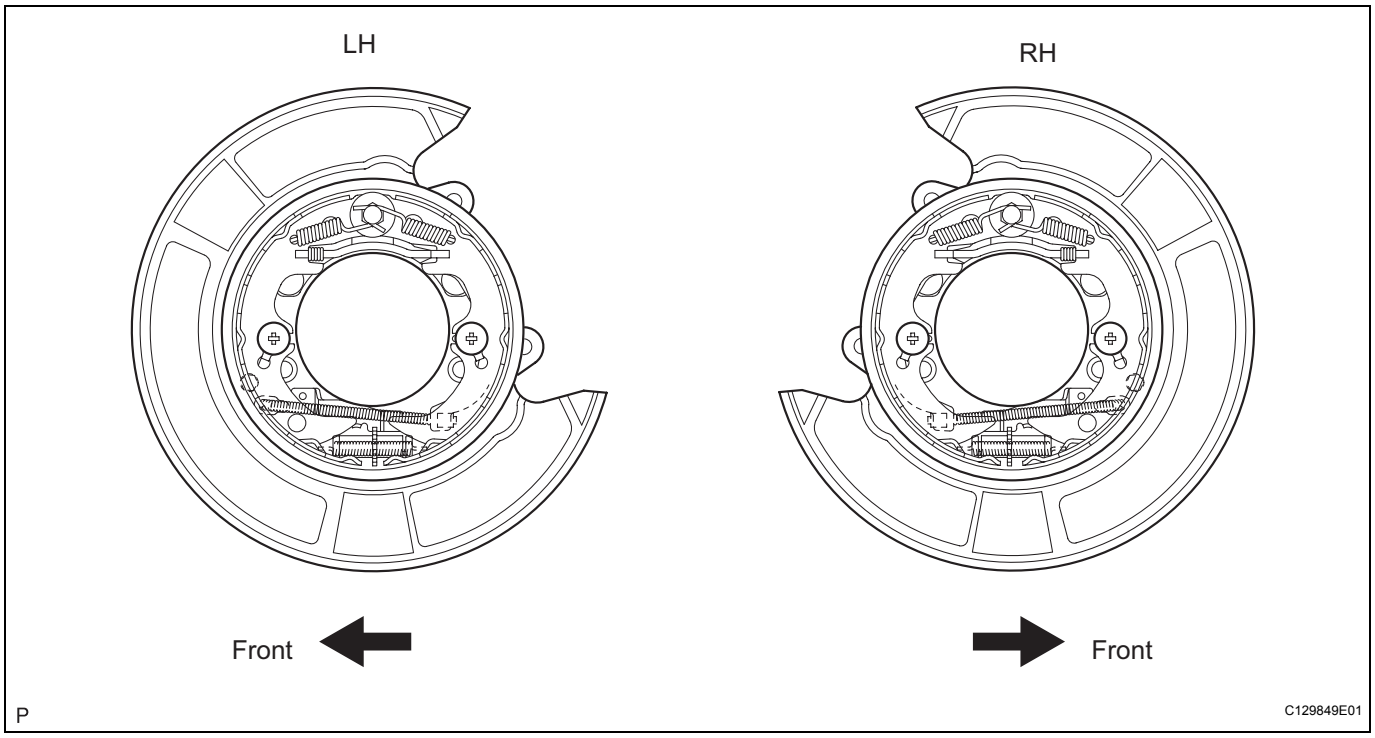

NOTICE:
There should be no oil or grease adhering to the friction surface of the shoe lining and disc.

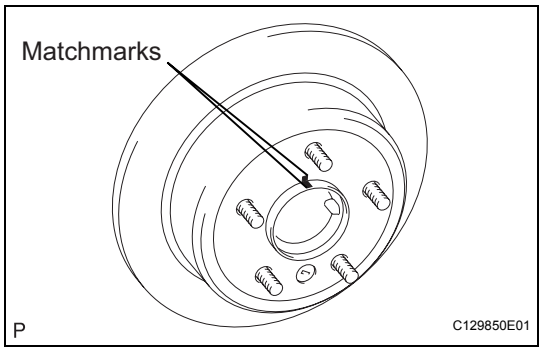

6. INSTALL REAR DISC

(a) Align the matchmarks and install the rear disc.

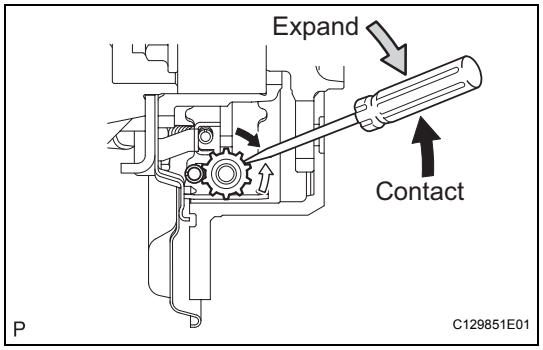

7. ADJUST PARKING BRAKE SHOE CLEARANCE

(a) Temporarily install the hub nuts.
(b) Remove the hole plug, turn the adjuster and expand the shoes until the disc locks.
(c) Contract the shoe adjuster until the disc rotates smoothly.
Standard:
Return 8 notches
(d) Check that there is no brake drag against the shoe.
(e) Install the hole plug.

PB

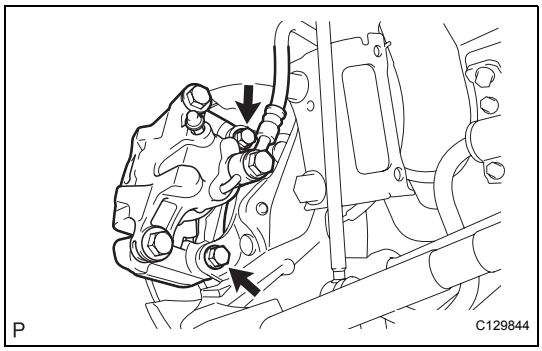

8. **INSTALL REAR DISC BRAKE CALIPER ASSEMBLY LH**
   (a) Install the rear disc brake caliper assembly LH with the 2 bolts.
   Torque: 62 N*m (630 kgf*cm, 46 ft.*lbf)
9. **INSTALL REAR WHEEL**
   Torque: 103 N*m (1,050 kgf*cm, 76 ft.*lbf)
10. **INSPECT AND ADJUST PARKING BRAKE PEDAL TRAVEL (See page PB-2)**

POWER STEERING SYSTEM

PRECAUTION

1. HANDLING PRECAUTIONS FOR STEERING SYSTEM

(a) Care must be taken when replacing parts. Incorrect replacement could affect the performance of the steering system and result in hazardous driving.

2. HANDLING PRECAUTIONS FOR SRS AIRBAG SYSTEM

(a) The vehicle is equipped with SRS (Supplemental Restraint System), such as airbags. If service operation is not carried out properly, in a step by step fashion, sudden deployment of the airbags may result in serious injury. Before servicing (including removal or installation of parts, inspection or replacement), be sure to read the precautionary notice for the supplemental restraint system (See page RS-1).

SYSTEM DESCRIPTION

COMPONENTS:

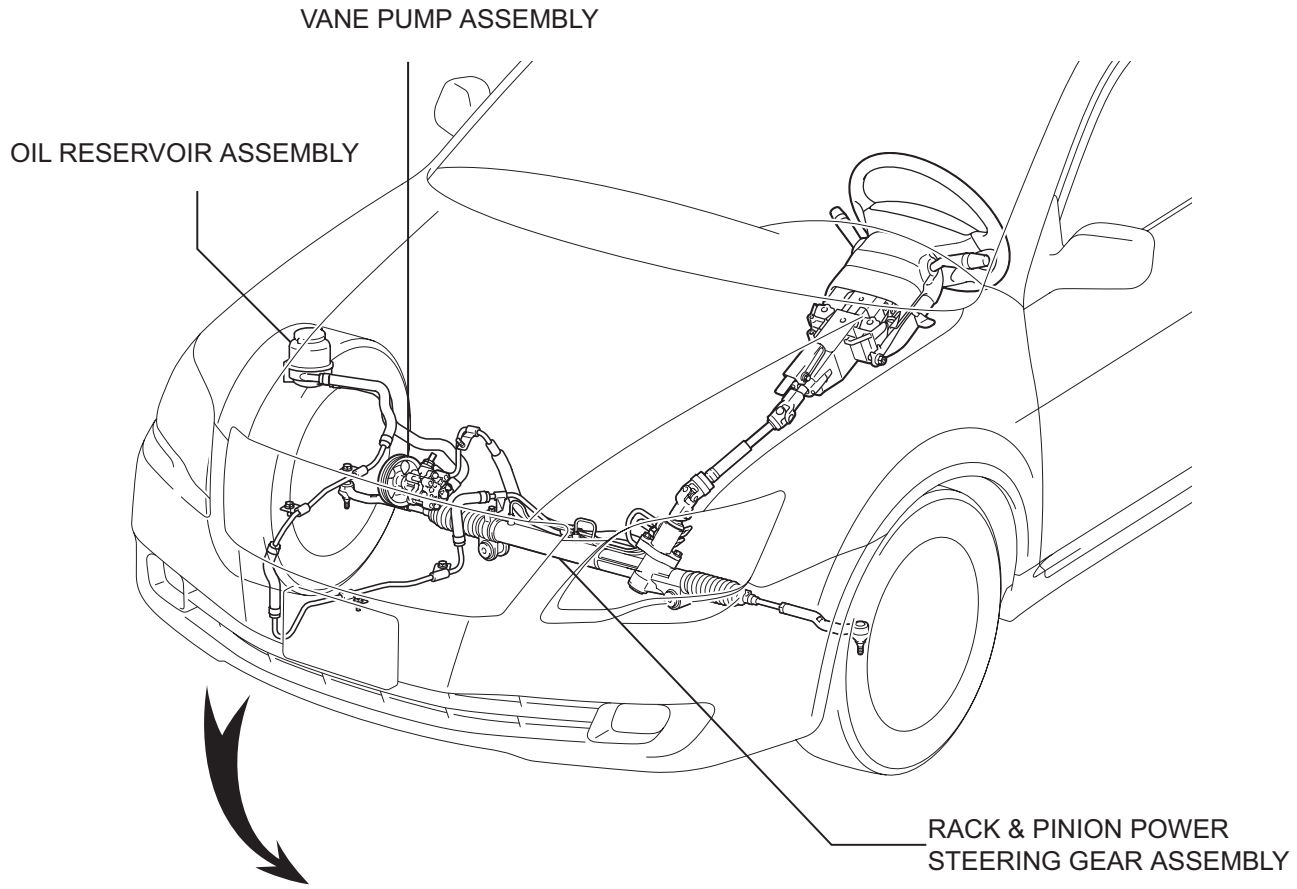

POWER STEERING FLUID FLOWCHART:

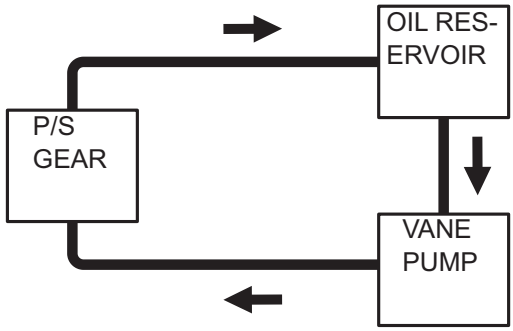

P

C114906E01

PROBLEM SYMPTOMS TABLE

HINT:
Use the table below to help determine the cause of the problem. The numbers indicate likely causes of the problem in descending order. Check each part in order. Repair or replace parts as necessary.

PROBLEM SYMPTOMS TABLE

Symptom	Suspected area	See page
Hard steering	1. Tires (Improperly inflated)	TW-2
	2. Power steering fluid level (Low)	PS-4
	3. Drive belt (Loosen)	EM-8
	4. Front wheel alignment (Incorrect)	SP-4
	5. Steering arm ball joints (Worn)	-
	6. Suspension arm ball joints (Worn)	SP-25
	7. Steering column (Binding)	-
	8. Power steering vane pump	PS-12
	9. Power steering gear	PS-28
Poor return	1. Tires (Improperly inflated)	TW-2
	2. Front wheel alignment (Incorrect)	SP-4
	3. Steering column (Binding)	-
	4. Power steering gear	PS-28
Excessive free play	1. Steering system joints (Worn)	-
	2. Suspension arm ball joints (Worn)	SP-25
	3. Intermediate shaft, Sliding yoke (Worn)	-
	4. Front wheel bearing (Worn)	AH-15
	5. Power steering gear	PS-28
Abnormal noise	1. Power steering fluid level (Low)	PS-4
	2. Drive belt (Loosen)	EM-8
	3. Steering system joints (Worn)	PS-28
	4. Power steering vane pump	PS-12
	5. Power steering gear	PS-28

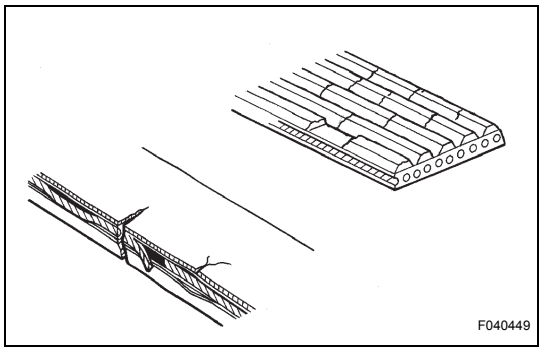

ON-VEHICLE INSPECTION

1. INSPECT DRIVE BELT

(a) Visually check the belt for excessive wear, frayed cords, etc.
If any defect is found, replace the drive belt.
HINT:
Cracks on the rib side of a belt are considered acceptable. Replace the belt if there are any missing ribs.

2. BLEED POWER STEERING SYSTEM

(a) Check the fluid level.
(b) Jack up the front of the vehicle and support it with stands.
(c) Turn the steering wheel.
  (1) With the engine stopped, turn the wheel slowly from lock to lock several times.
(d) Lower the vehicle.
(e) Start the engine.
  (1) Run the engine at idle for a few minutes.

(f) Turn the steering wheel.
  (1) With the engine idling, turn the wheel left or right to the full lock position and keep it there for 2 to 3 seconds, then turn the wheel to the opposite full lock position and keep it there for 2 to 3 seconds.*1
  (2) Repeat (*1) several times.
(g) Stop the engine.

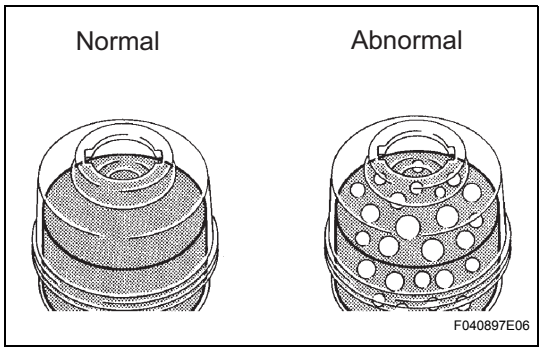

(h) Check for foaming or emulsification.
Especially, if the system has to be held twice because of foaming or emulsification, check for fluid leaks in the system.
(i) Check the fluid level.

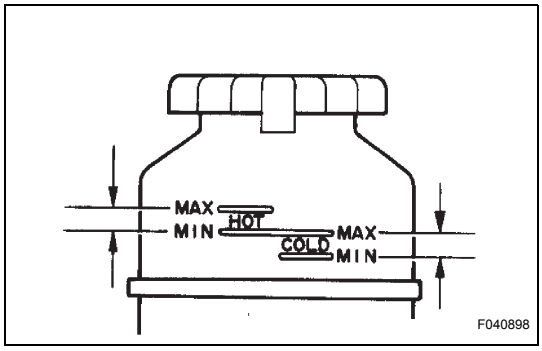

3. CHECK FLUID LEVEL

(a) Keep the vehicle horizontal.
(b) With the engine stopped, check the fluid level in the reservoir.
If necessary, add fluid.
Fluid:
ATF DEXRON II or III
HINT:
If the fluid is hot, check that the fluid level is within the HOT range. If the fluid is cold, check that the fluid level is within the COLD range.
(c) Start the engine and run at idle.
(d) Turn the steering wheel from lock to lock several times to raise fluid temperature.
Fluid temperature:
75 to 80°C (167 to 176°F)

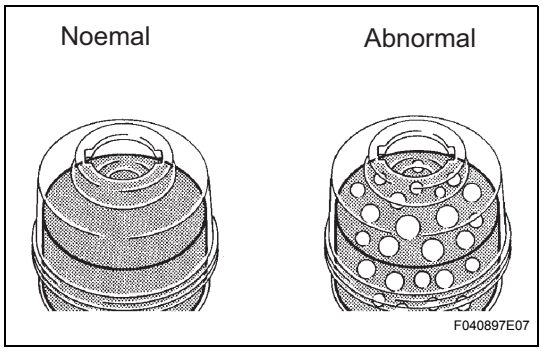

(e) Check for foaming or emulsification.
If foaming or emulsification is identified, bleed the power steering system.

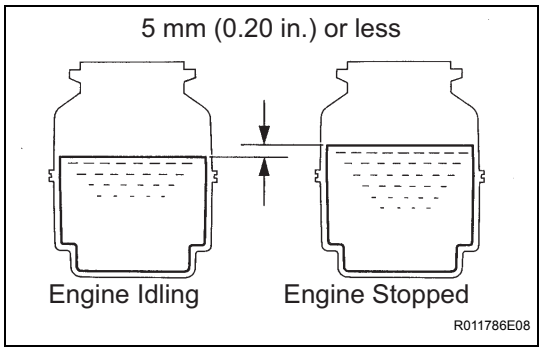

(f) With the engine idling, measure the fluid level in the reservoir.
(g) Stop the engine.
(h) Wait a few minutes and remeasure the fluid level in the reservoir.
Maximum fluid level rise:
About 5 mm (0.20 in.)
If a problem is found, bleed the power steering system.
(i) Check the fluid level.

4. CHECK STEERING FLUID PRESSURE

(a) Disconnect the pressure feed tube assembly (See page PS-9).
(b) Connect SST as shown in the illustration
SST 09640-10010 (09641-01010, 09641-01020, 09641-01030)
NOTICE:
Check that the valve of the SST is in the open position.
(c) Bleed the power steering system.
(d) Start the engine and run at idle.
(e) Turn the steering wheel from lock to lock several times to raise fluid temperature.
Fluid temperature:
75 to 80°C (167 to 176°F)

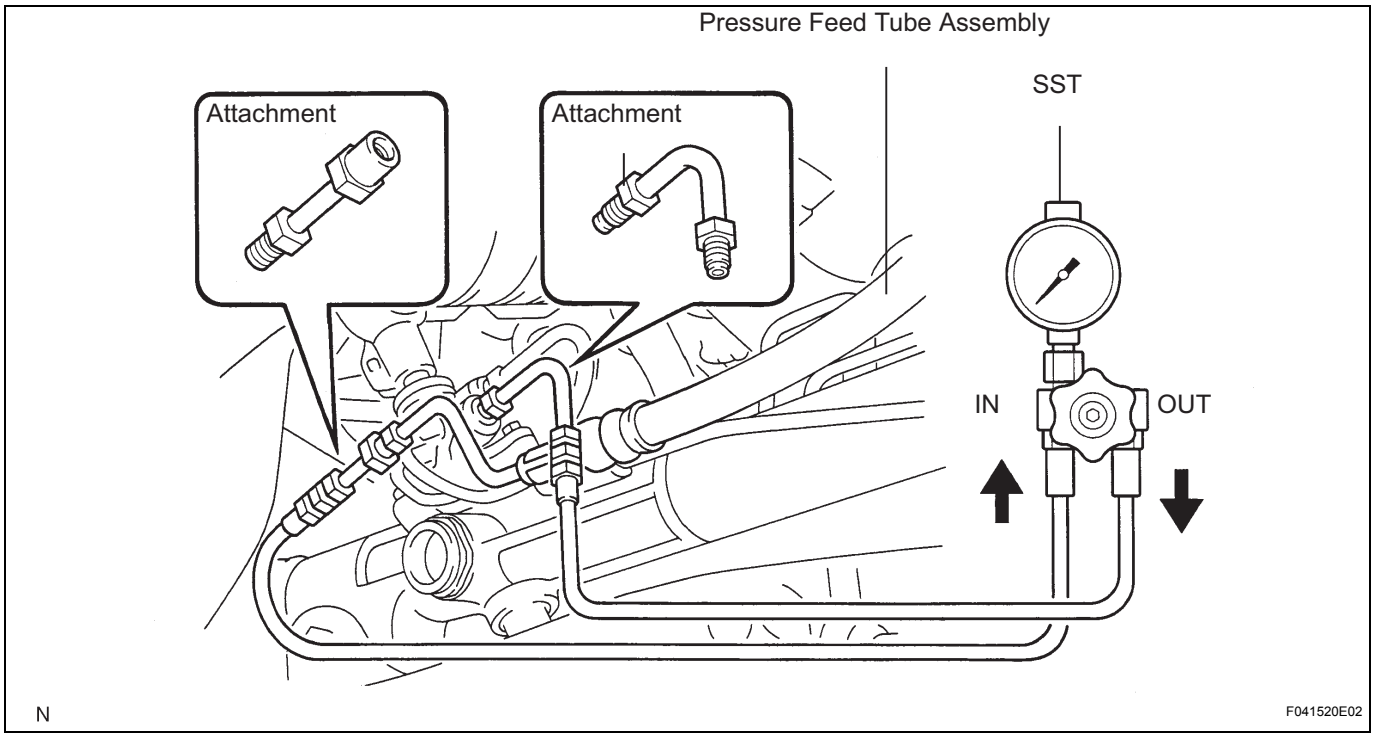

PS

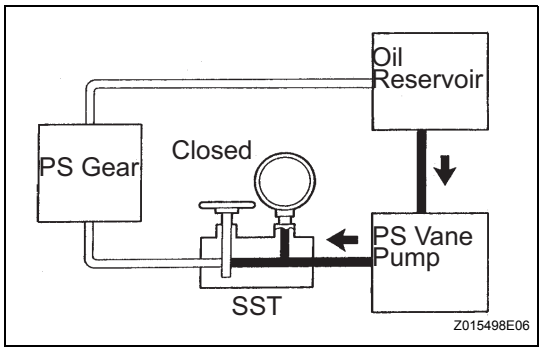

(f) With the engine idling, close the valve of the SST and observe the reading on the SST.
Fluid pressure:

7,800 to 8,300 kPa (80 to 85 kgf/cm^2, 1,131 to 1,204 psi)

NOTICE:
- **Do not keep the valve closed for more than 10 seconds.**
- **Do not allow the fluid temperature to become too high.**

If not within the specified range, check for fluid leaks and replace parts as necessary.

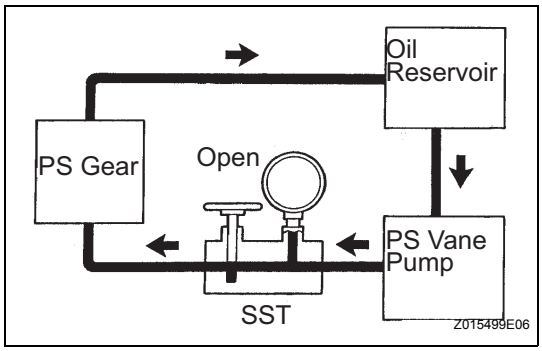

(g) With the engine idling, fully open the valve.
(h) Measure the fluid pressure at engine speeds of 1,000 rpm and 3,000 rpm.
Difference in fluid pressure:

490 kPa (5 kgf/cm^2, 71 psi) or less

NOTICE:
Do not turn the steering wheel.

If not within the specified range, check for fluid leaks and replace parts as necessary.

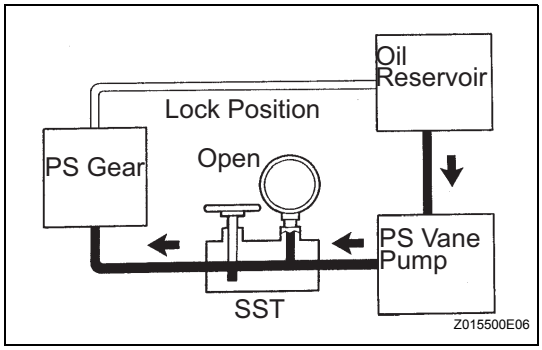

(i) With the engine idling and the valve fully opened, turn the steering wheel left or right to the full lock position. Observe the reading on the SST.
Fluid pressure:

7,800 to 8,300 kPa (80 to 85 kgf/cm^2, 1,131 to 1,204 psi)

NOTICE:
- **Do not keep the steering wheel in the full lock position for more than 10 seconds.**
- **Do not allow the fluid temperature to become too high.**

If not within the specified range, check for fluid leaks and replace parts as necessary.

(j) Disconnect the SST.
SST 09640-10010 (09641-01010, 09641-01020, 09641-01030)

(k) Connect the pressure feed tube assembly (See page PS-17).
(l) Bleed the power steering system.

5. CHECK STEERING WHEEL ASSEMBLY

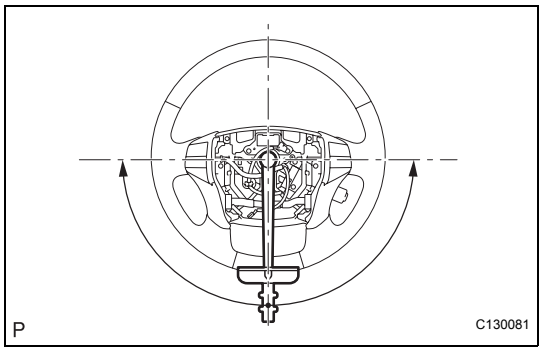

(a) Center the steering wheel.
(b) Remove the horn button assembly (See page RS-304).
(c) Start the engine and run at idle.
(d) Measure the steering effort in both directions.
Torque: Steering effort (Reference)

6.0 N*m (61 kgf*cm, 53 in.*lbf) or less

HINT:
Check tire type, pressure and road surface before making your diagnosis.

PS

If not within the specified range, check the power steering system (See page PS-2).

(e) Tighten the steering wheel set nut.
Torque: 50 N*m (510 kgf*cm, 37 ft.*lbf)

(f) Install the horn button assembly (See page RS-305).

VANE PUMP

COMPONENTS

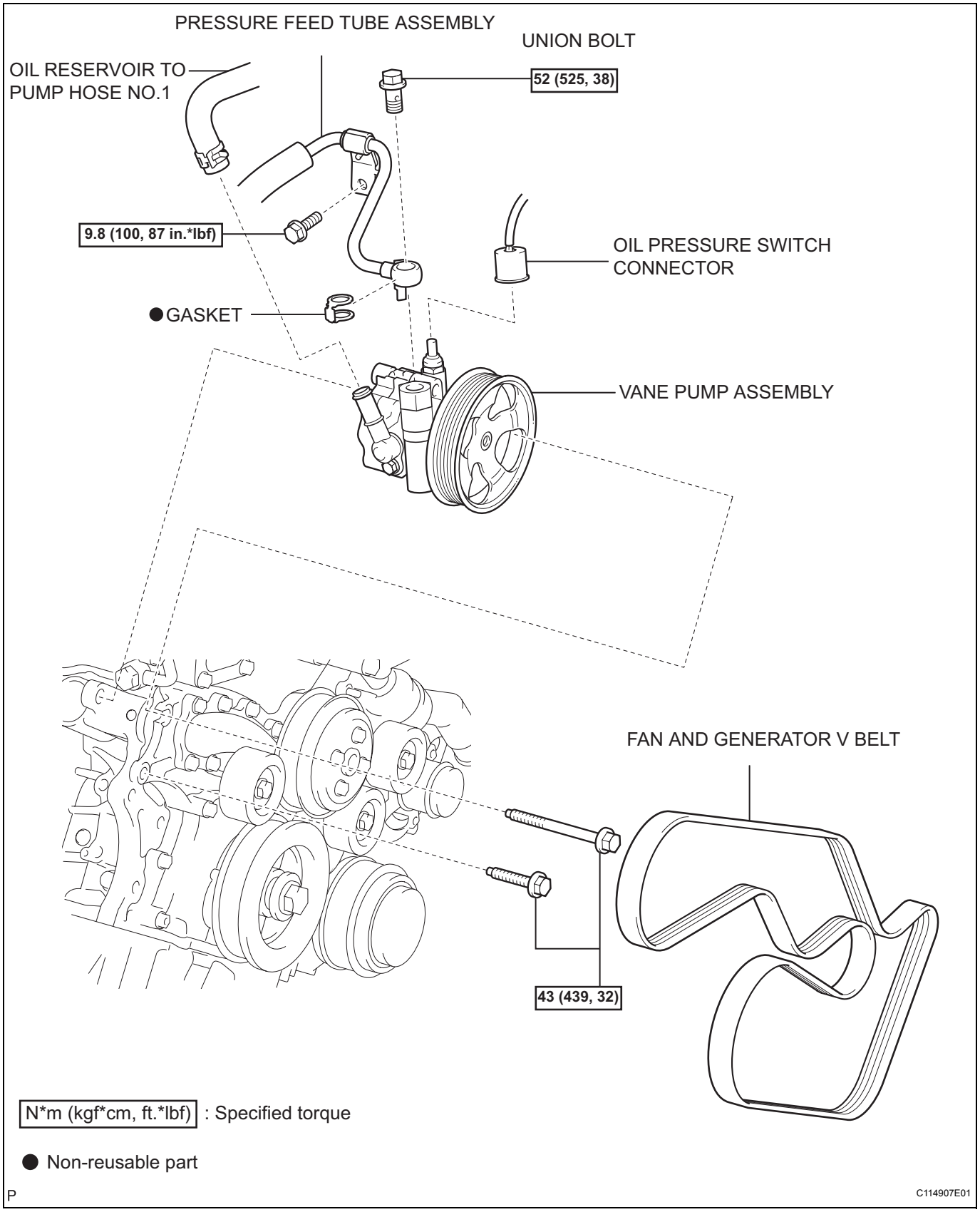

PS

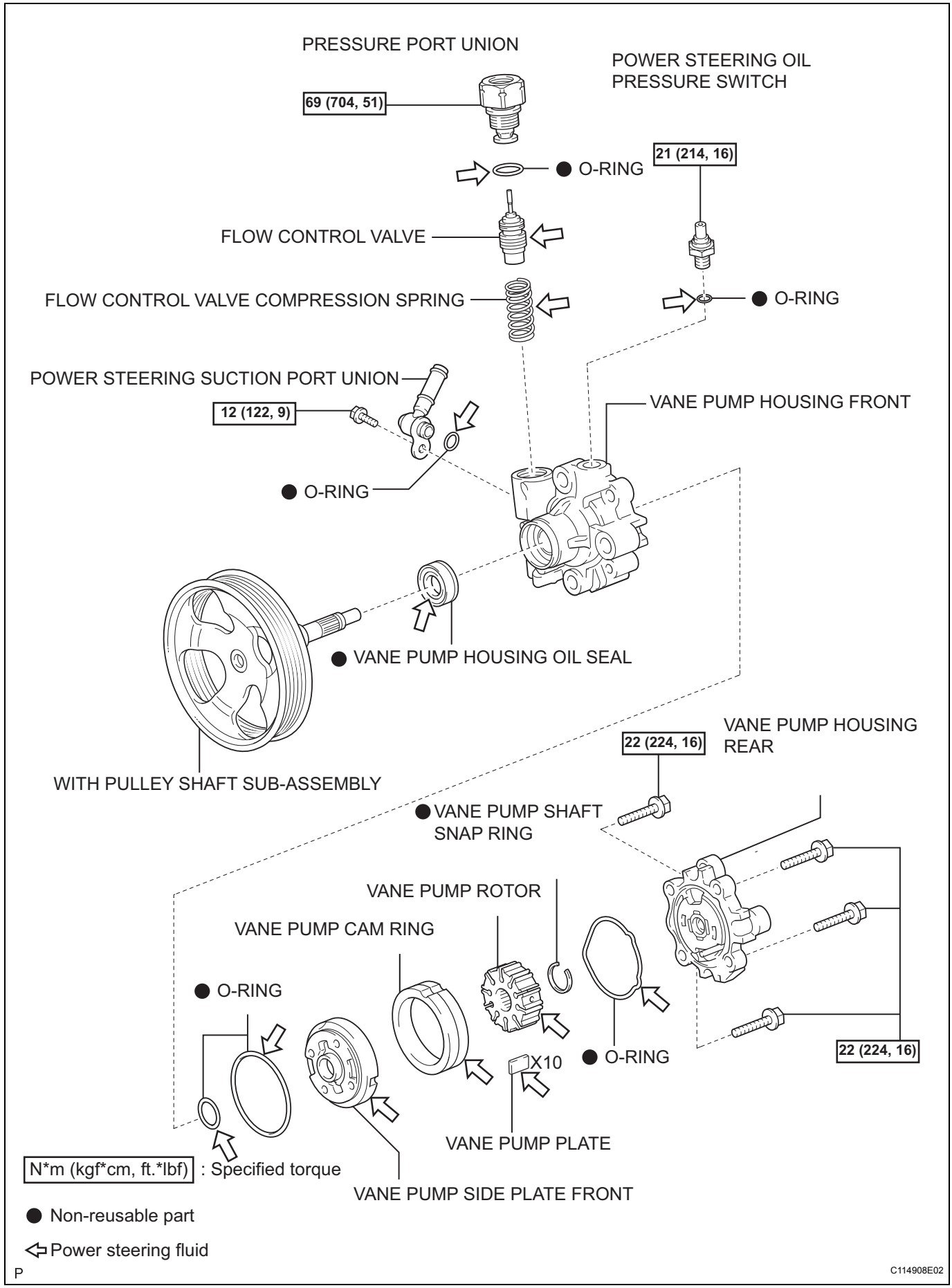
PRESSURE PORT UNION
POWER STEERING OIL PRESSURE SWITCH
69 (704, 51)
21 (214, 16)
● O-RING
FLOW CONTROL VALVE
FLOW CONTROL VALVE COMPRESSION SPRING
● O-RING
POWER STEERING SUCTION PORT UNION
12 (122, 9)
VANE PUMP HOUSING FRONT
● O-RING
● VANE PUMP HOUSING OIL SEAL
WITH PULLEY SHAFT SUB-ASSEMBLY
22 (224, 16)
VANE PUMP HOUSING REAR
● VANE PUMP SHAFT SNAP RING
VANE PUMP ROTOR
VANE PUMP CAM RING
● O-RING
X10
● O-RING
22 (224, 16)
VANE PUMP PLATE
VANE PUMP SIDE PLATE FRONT
N*m (kgf*cm, ft.*lbf) : Specified torque
● Non-reusable part
⇦ Power steering fluid
P
C114908E02

PS

REMOVAL

NOTICE:

- **Do not overtighten when using a vise.**
- **When installing, coat the parts indicated by arrows with power steering fluid (See page PS-7).**
- **Take care not to spill power steering fluid on the V belt.**

1. **REMOVE FRONT WHEEL RH**
2. **DRAIN POWER STEERING FLUID**
3. **REMOVE FRONT FENDER APRON SEAL RH**
4. **REMOVE FAN AND GENERATOR V BELT**
   HINT:
   (See page EM-7)
5. **DISCONNECT OIL RESERVOIR TO PUMP HOSE NO.1**
   (a) Remove the clip and disconnect the oil reservoir to pump hose No.1.

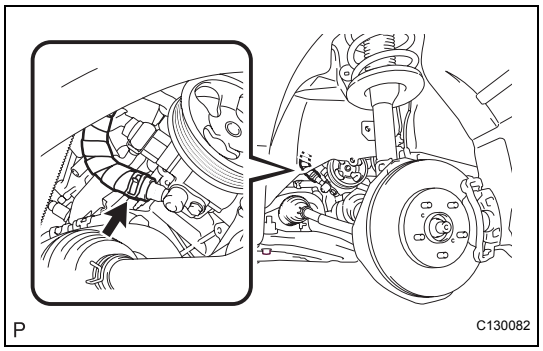

6. **DISCONNECT PRESSURE FEED TUBE ASSEMBLY**
   (a) Remove the union bolt and disconnect the pressure feed tube assembly from the vane pump assembly.
   (b) Remove the bolt and separate the pressure feed tube assembly clamp.
   (c) Remove the gasket from the pressure feed tube assembly.

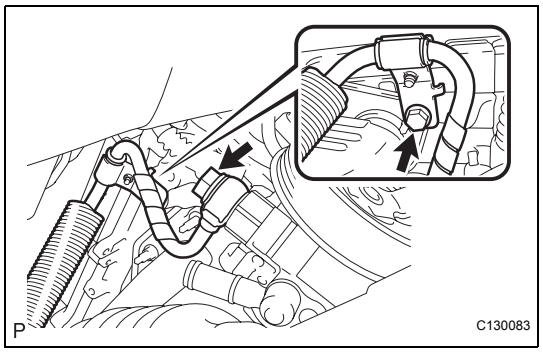

7. **REMOVE VANE PUMP ASSEMBLY**
   (a) Disconnect the connector from the power steering oil pressure switch.

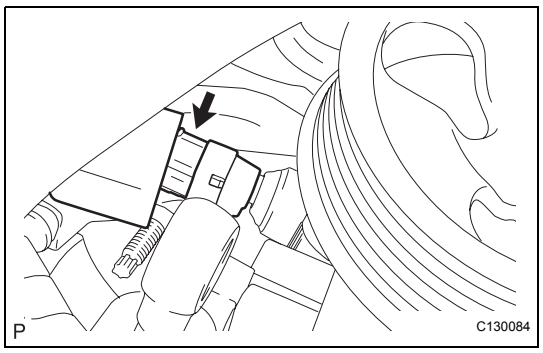

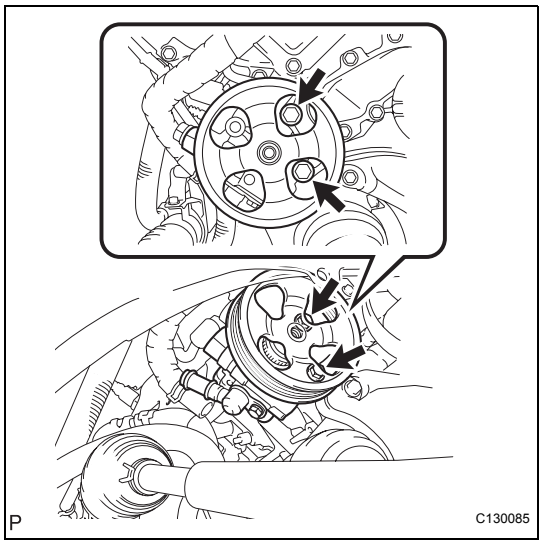

(b) Remove the 2 bolts and the vane pump assembly.

DISASSEMBLY

1. FIX VANE PUMP ASSEMBLY

(a) Using SST, hold the vane pump assembly in a vise.
SST 09630-00014 (09631-00132)

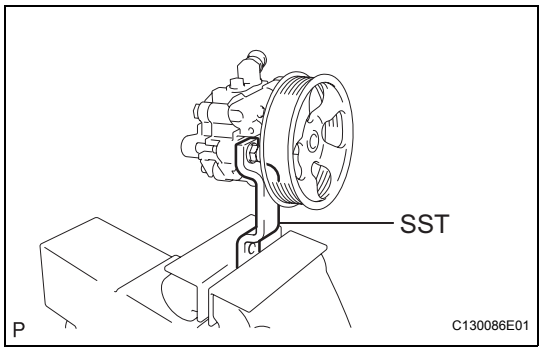

2. REMOVE POWER STEERING SUCTION PORT UNION

(a) Remove the bolt and the power steering suction port union from the vane pump assembly.
(b) Remove the O-ring from the power steering suction port union.

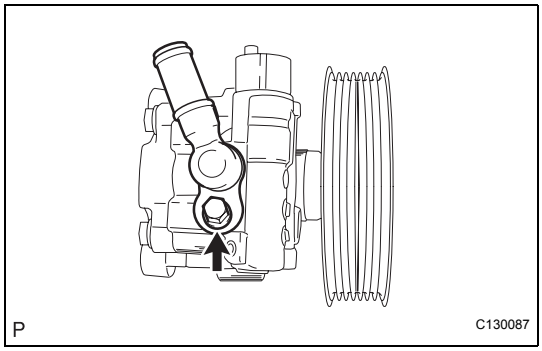

3. REMOVE FLOW CONTROL VALVE

(a) Remove the pressure port union.
(b) Remove the O-ring from the pressure port union.
(c) Remove the flow control valve and the compression spring.

4. REMOVE POWER STEERING OIL PRESSURE SWITCH

(a) Remove the power steering oil pressure switch from the vane pump housing front.
(b) Using a screwdriver, remove the O-ring from the power steering oil pressure switch.
NOTICE:
If the oil power steering oil pressure switch is dropped or damaged, replace it with a new one.

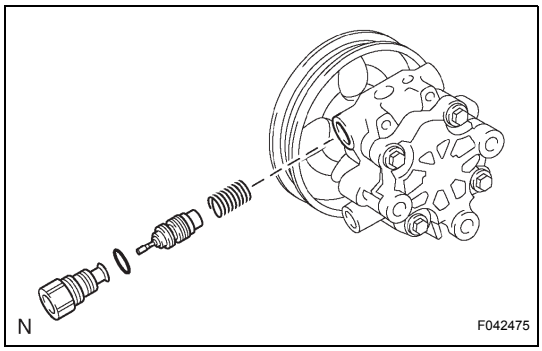

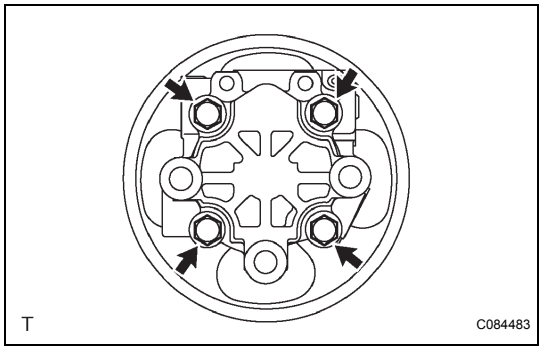

5. REMOVE VANE PUMP HOUSING REAR

(a) Remove the 4 bolts and the vane pump housing rear from the vane pump housing front.

(b) Remove the O-ring from the vane pump housing rear.

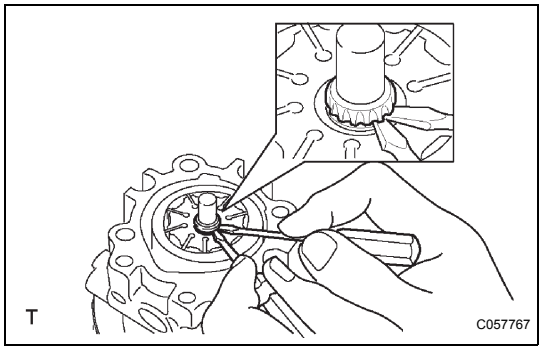

6. REMOVE WITH PULLEY SHAFT SUB-ASSEMBLY

(a) Using 2 screwdrivers, remove the snap ring from the w/ pulley shaft sub-assembly.

(b) Remove the w/ pulley shaft sub-assembly.

7. REMOVE VANE PUMP ROTOR

(a) Remove the 10 vane pump plates.

(b) Remove the vane pump rotor.

8. REMOVE VANE PUMP CAM RING

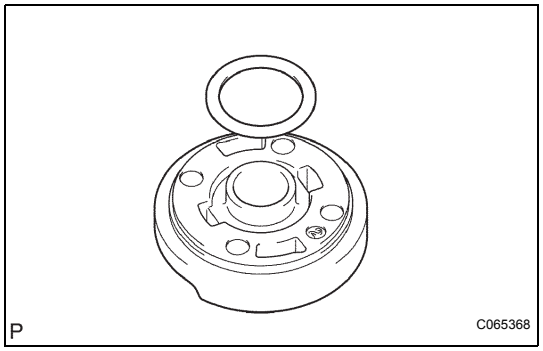

9. REMOVE VANE PUMP SIDE PLATE FRONT

(a) Remove the vane pump side plate front from the vane pump housing front.

(b) Remove the O-ring from the vane pump side plate front.

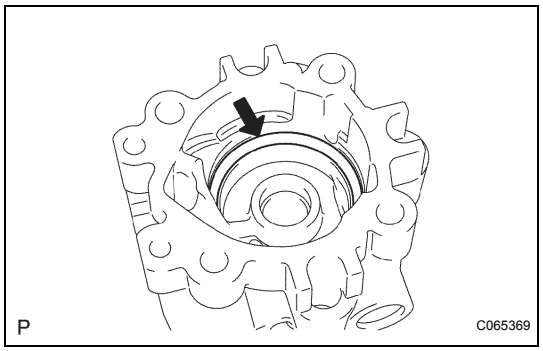

(c) Remove the O-ring from the vane pump housing front.

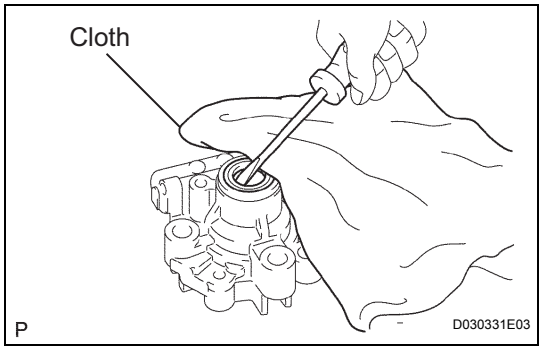

10. REMOVE VANE PUMP HOUSING OIL SEAL

(a) Using a screwdriver, remove the vane pump housing oil seal.

NOTICE:
Be careful not to damage the vane pump housing front.

PS

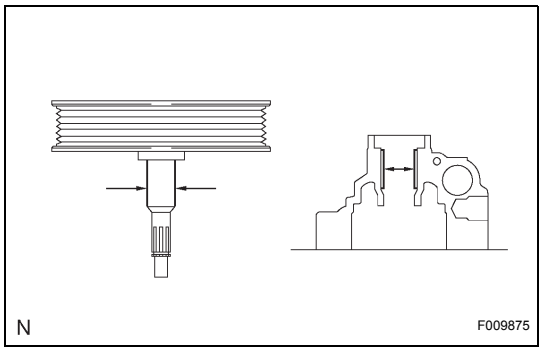

INSPECTION

1. INSPECT VANE PUMP SHAFT

(a) Using a micrometer and a caliper gauge, measure the oil clearance.
Maximum clearance:
0.07 mm (0.0028 in.)
If clearance exceeds the maximum, replace the vane pump assembly.

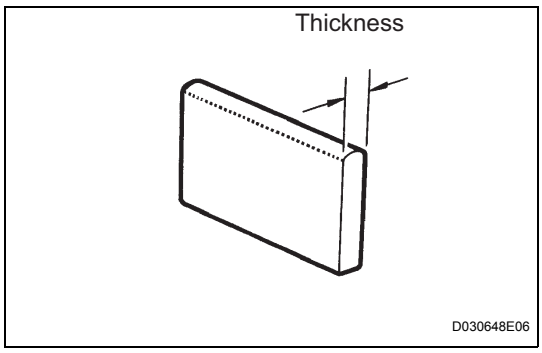

2. INSPECT VANE PUMP ROTOR

(a) Using a micrometer, measure the thickness of the vane pump plates.
Standard thickness:
1.405 to 1.411 mm (0.05531 to 0.05555 in.)

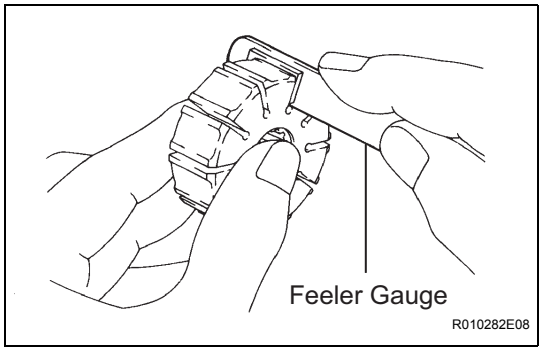

(b) Using a feeler gauge, measure the clearance between a side face of the vane pump rotor groove and the vane plates.
Maximum clearance:
0.03 mm (0.0012 in.)
If clearance exceeds the maximum, replace the vane pump assembly.

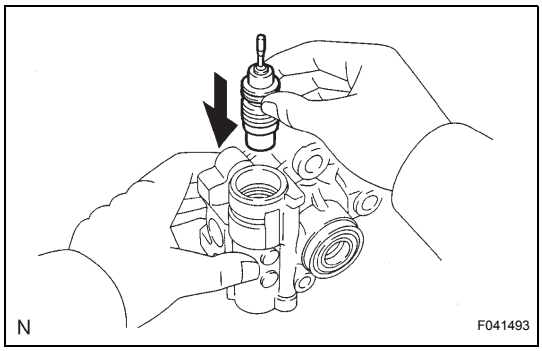

3. INSPECT FLOW CONTROL VALVE

(a) Coat the flow control valve with power steering fluid and check that it falls smoothly into the flow control valve hole under its own weight.
If it lacks smoothness, replace the vane pump assembly.

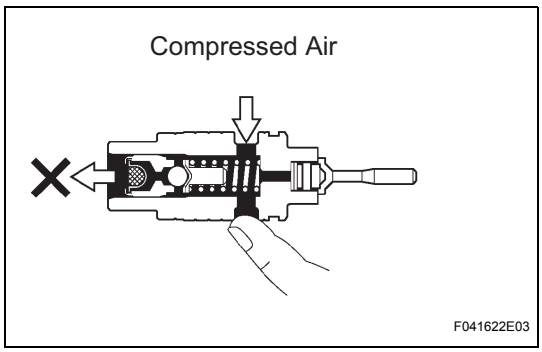

(b) Check the flow control valve for leakage. Close one of the holes and apply compressed air, 392 to 490 kPa (4 to 5 kgf/cm^2, 57 to 71 psi), into the opposite side hole, and confirm that air does not come out from the end holes.
If air leaks, replace the vane pump assembly.

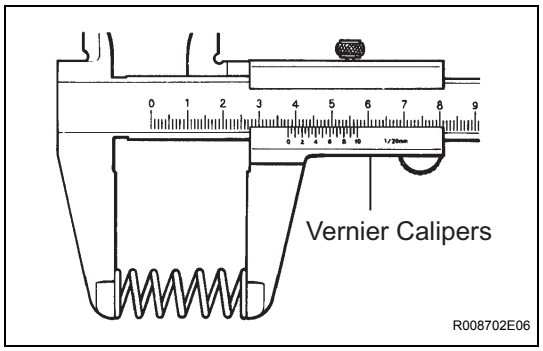

4. INSPECT FLOW CONTROL VALVE COMPRESSION SPRING

(a) Using vernier calipers, measure the free length of the compression spring.

Minimum free length:
36.9 mm (1.453 in.)

If the length is less than the minimum, replace the vane pump assembly.

5. INSPECT PRESSURE PORT UNION

If the union seat in the pressure port union is severely damaged, it may cause fluid leakage. In that case, replace the vane pump assembly.

REASSEMBLY

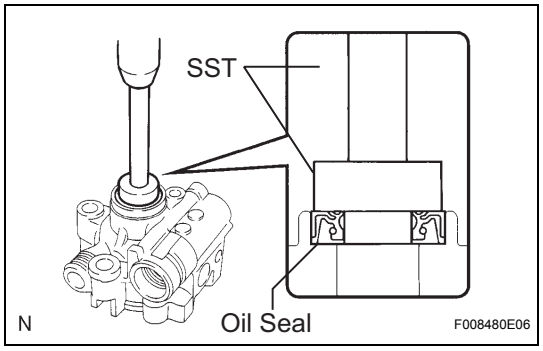

1. INSTALL VANE PUMP HOUSING OIL SEAL

(a) Coat a new vane pump housing oil seal lip with power steering fluid.

(b) Using SST and a press, install the oil seal.

SST 09950-60010 (09951-00280), 09950-70010 (09951-07100)

NOTICE:

Make sure that the vane pump housing oil seal is installed in the correct direction as shown in the illustration.

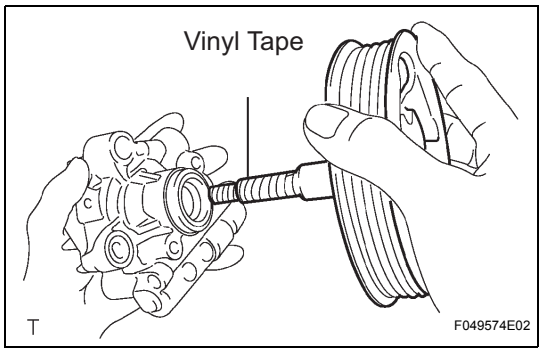

2. INSTALL WITH PULLEY SHAFT SUB-ASSEMBLY

(a) Coat the bushing surface of the housing front with power steering fluid.

(b) Gradually insert the w/ pulley shaft sub-assembly.

NOTICE:

Do not damage the vane pump housing oil seal lip in the housing front.

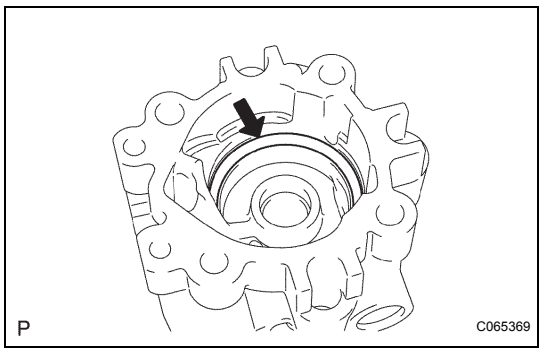

3. INSTALL VANE PUMP SIDE PLATE FRONT

(a) Coat a new O-ring with power steering fluid and install it into the vane pump housing front.

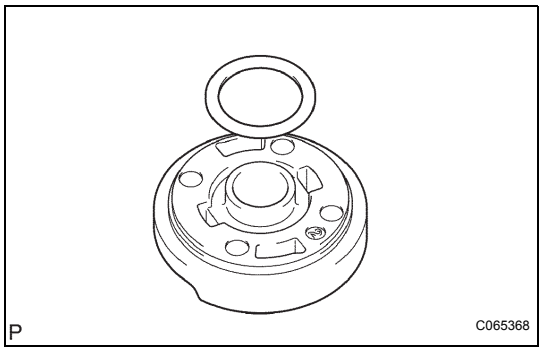

(b) Coat a new O-ring with power steering fluid and install it onto the vane pump side plate front.

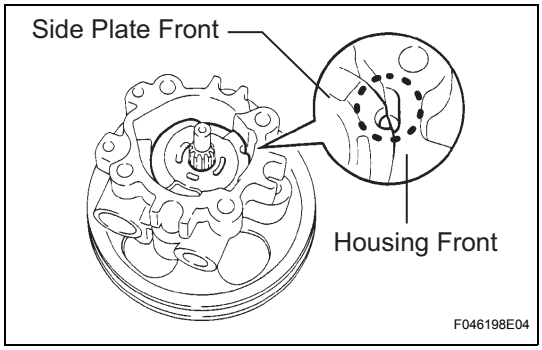

(c) Align the dent of the vane pump side plate front with that of the vane pump housing front, and install the vane pump side plate front to the vane pump housing front.
NOTICE:
Make sure that the side plate front is installed in the correct direction.

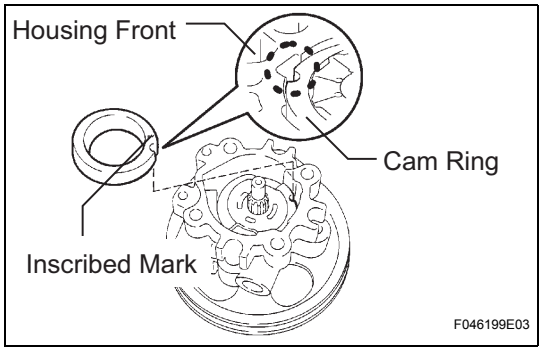

4. INSTALL VANE PUMP CAM RING

(a) Align the dent of the vane pump cam ring with that of the vane pump side plate front, and install the vane pump cam ring with the inscribed mark facing upward.
NOTICE:
Make sure that the vane pump cam ring is installed in the correct direction.

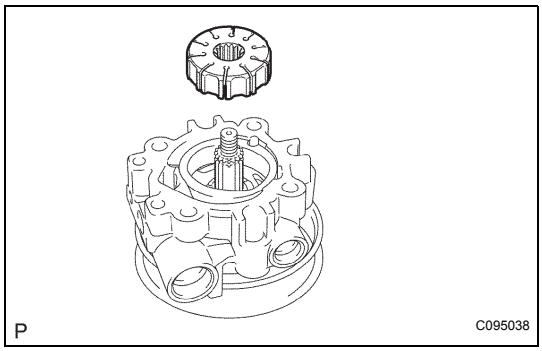

5. INSTALL VANE PUMP ROTOR

(a) Coat the vane pump rotor with power steering fluid.
(b) Install the vane pump rotor.
HINT:
Vane pump rotor has no specific direction.

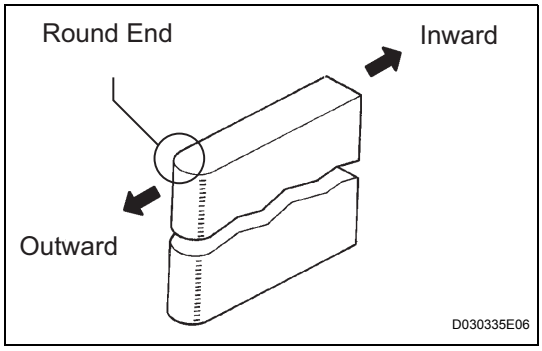

(c) Coat the 10 vane pump plates with power steering fluid.
(d) Install the vane pump plates with the round end facing outward.

PS

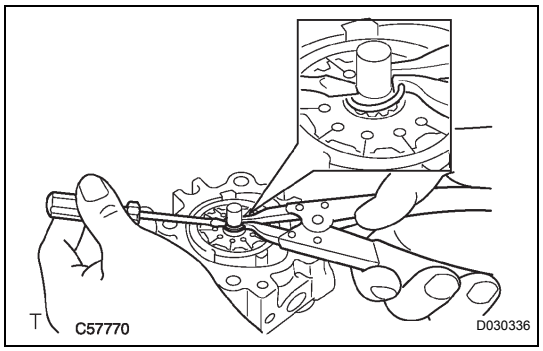

6. INSTALL VANE PUMP SHAFT SNAP RING

(a) Using a screwdriver and a snap ring expander, install a new snap ring to the w/ pulley shaft sub-assembly.

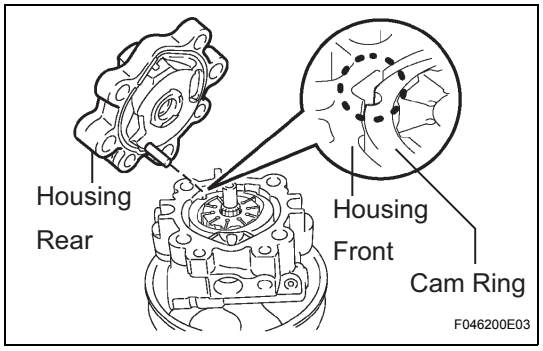

7. INSTALL VANE PUMP HOUSING REAR

(a) Coat a new O-ring with power steering fluid and install it onto the vane pump housing rear.

(b) Align the straight pin of the vane pump housing rear with the dents of the vane pump cam ring, vane pump side plate front and the vane pump housing front, and install the vane pump housing rear with the 4 bolts.

Torque: 22 N*m (224 kgf*cm, 16 ft.*lbf)

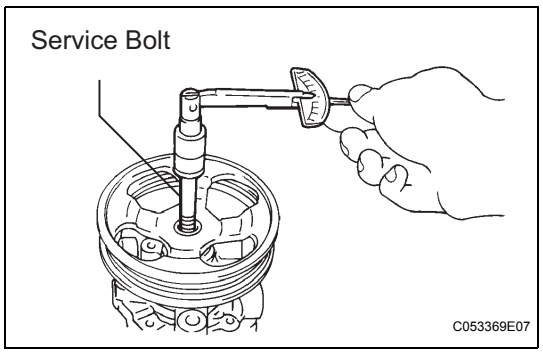

8. INSPECT PRELOAD

(a) Check that the pump rotates smoothly without abnormal noise.

(b) Temporarily install the service bolt.

Recommended service bolt:
Thread diameter:
10 mm (0.39 in.)
Thread pitch:
1.25 mm (0.0492 in.)
Bolt length:
50 mm (1.97 in.)

(c) Using a torque wrench, check the pulley rotating torque.

Torque: Rotating torque
0.27 N*m (2.8 kgf*cm, 2.4 ft.*lbf) or less

If rotating torque is not as specified, check the installation condition of each part.

9. INSTALL POWER STEERING OIL PRESSURE SWITCH

(a) Coat a new O-ring with power steering fluid, and install it to the suction port union.

(b) Install the power steering oil pressure switch onto the vane pump assembly.

Torque: 21 N*m (214 kgf*cm, 16 ft.*lbf)

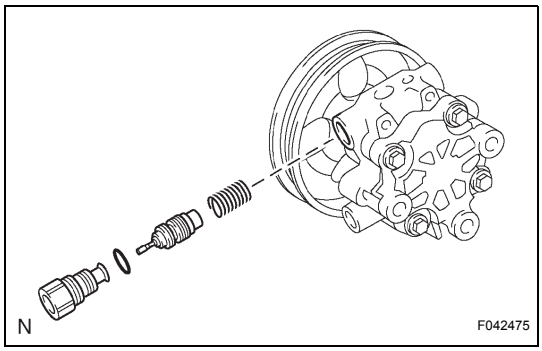

10. INSTALL FLOW CONTROL VALVE

(a) Coat the compression spring and the flow control valve with power steering fluid.
(b) Install the compression spring and the flow control valve.
(c) Coat a new O-ring with power steering fluid and install it onto the pressure port union.
(d) Install the pressure port union.
Torque: 69 N*m (704 kgf*cm, 51 ft.*lbf)

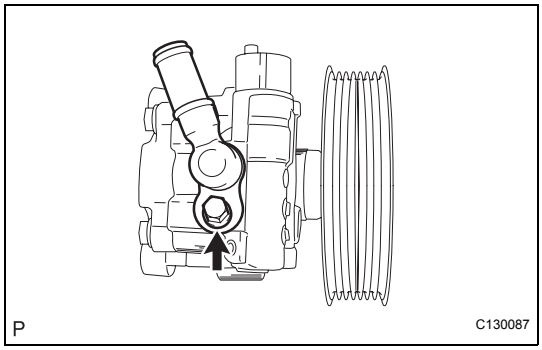

11. INSTALL POWER STEERING SUCTION PORT UNION

(a) Coat a new O-ring with power steering fluid, and install it to the power steering suction port union.
(b) Install the power steering suction port union with the bolt.
Torque: 12 N*m (122 kgf*cm, 9 ft.*lbf)

INSTALLATION

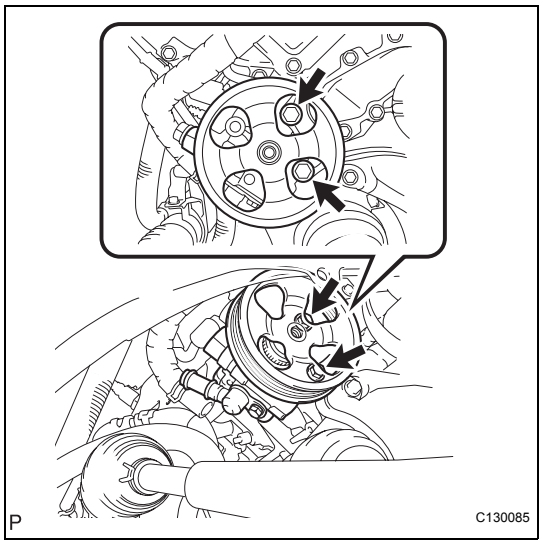

1. INSTALL VANE PUMP ASSEMBLY

(a) Install the vane pump assembly with the 2 bolts.
Torque: 43 N*m (439 kgf*cm, 32 ft.*lbf)

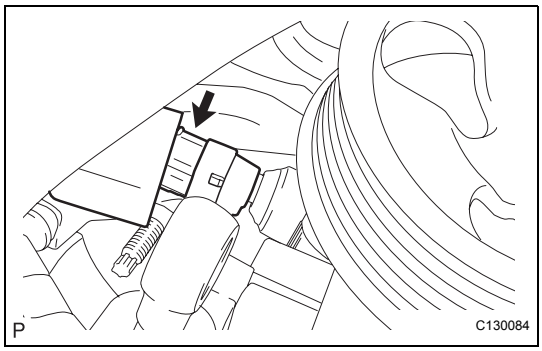

(b) Connect the connector to the power steering oil pressure switch.

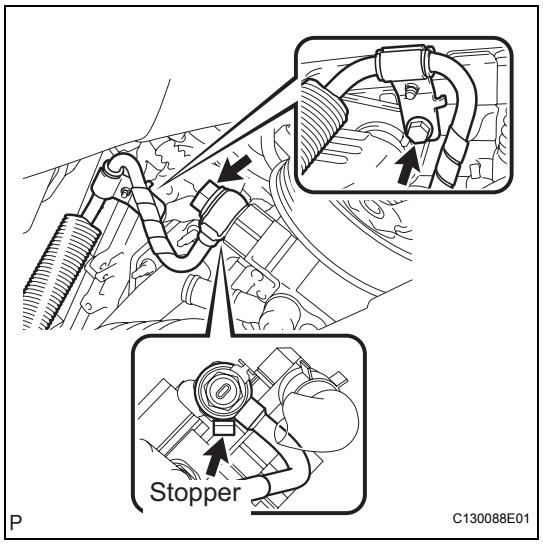

2. CONNECT PRESSURE FEED TUBE ASSEMBLY

(a) Install a new gasket to the pressure feed tube assembly.

(b) Connect the pressure feed tube assembly to the vane pump assembly with the union bolt
Torque: 52 N*m (525 kgf*cm, 38 ft.*lbf)
HINT:
Make sure that the stopper of the pressure feed tube assembly contacts the vane pump assembly as shown in the illustration, then tighten the union bolt.

(c) Install the pressure feed tube clamp with the bolt.
Torque: 9.8 N*m (100 kgf*cm, 87 in.*lbf)

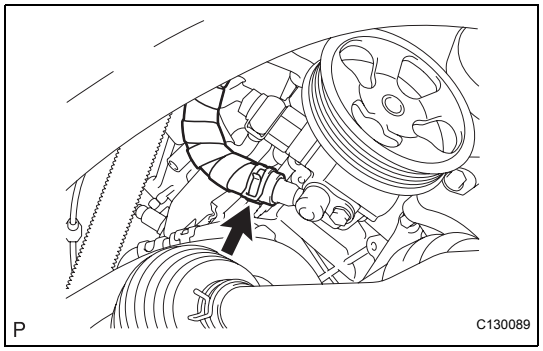

3. CONNECT OIL RESERVOIR TO PUMP HOSE NO.1

(a) Connect the oil reservoir to pump hose No.1 with the clip.

4. INSTALL FAN AND GENERATOR V BELT
HINT:
(See page EM-8)

5. INSTALL FRONT FENDER APRON SEAL RH

6. INSTALL FRONT WHEEL RH

7. BLEED POWER STEERING FLUID

8. CHECK FOR FLUID LEAKS

RACK AND PINION POWER STEERING GEAR

COMPONENTS

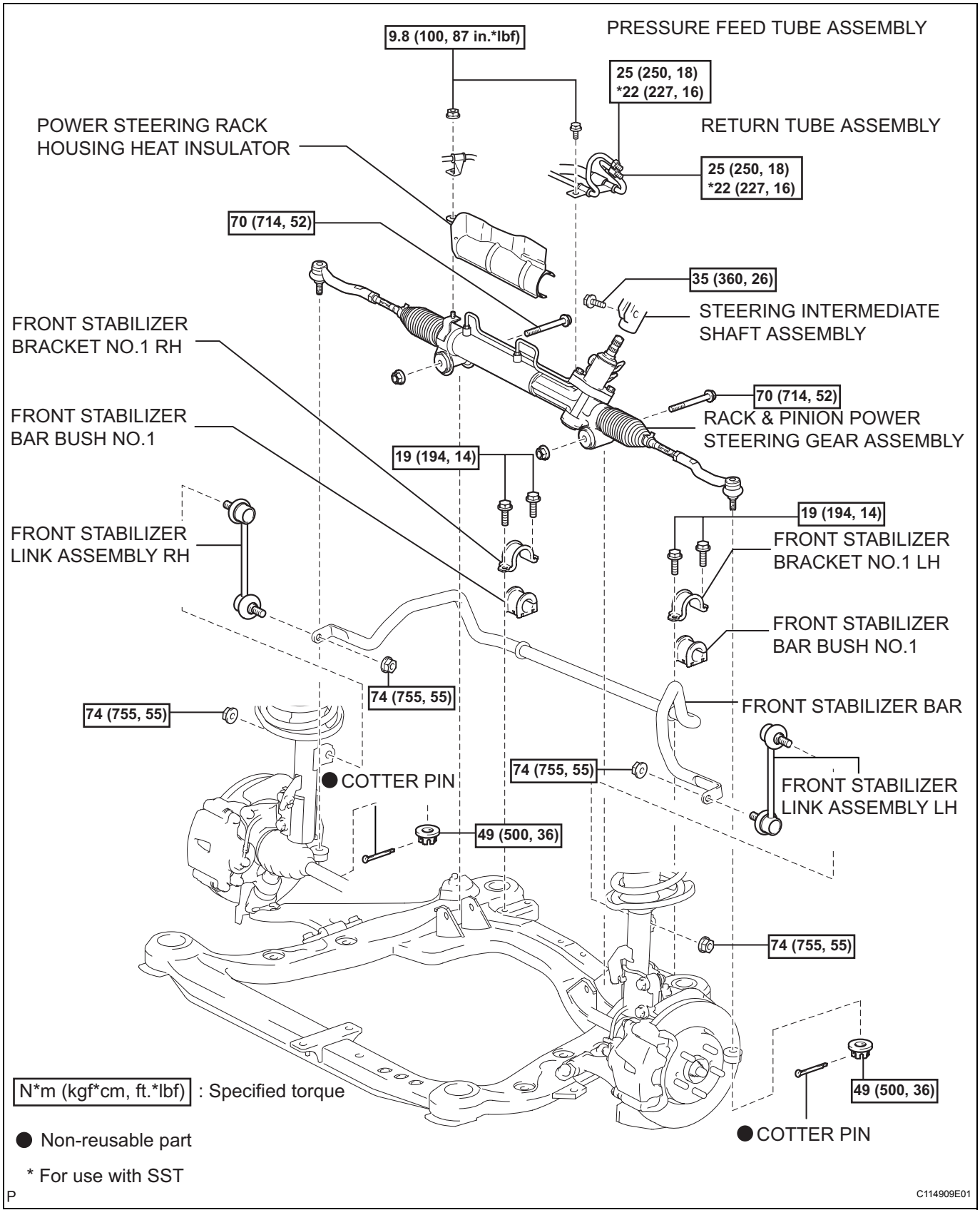

PS

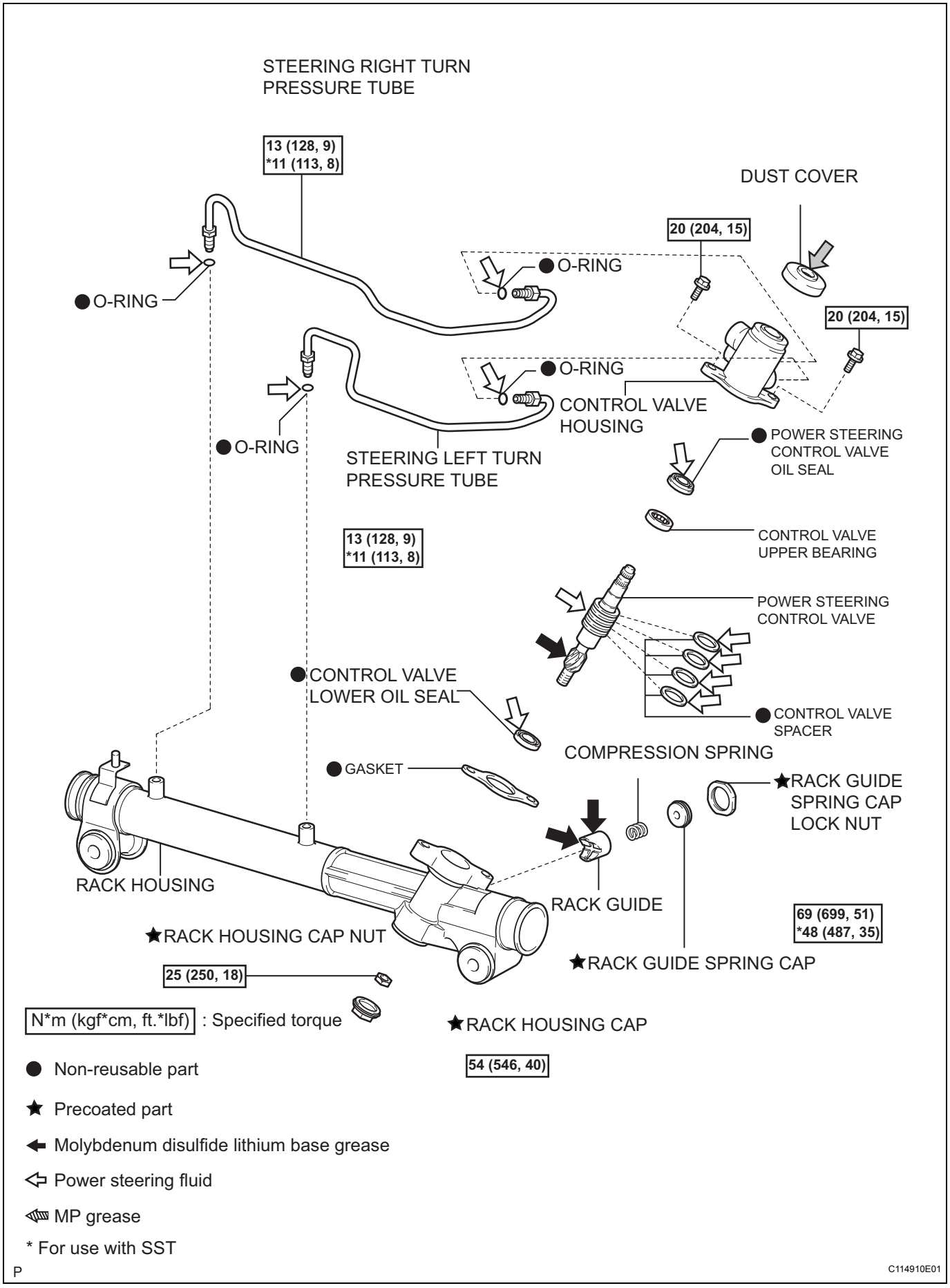
STEERING RIGHT TURN PRESSURE TUBE
13 (128, 9) *11 (113, 8)
DUST COVER
20 (204, 15)
O-RING
O-RING
20 (204, 15)
O-RING
CONTROL VALVE HOUSING
O-RING
STEERING LEFT TURN PRESSURE TUBE
POWER STEERING CONTROL VALVE OIL SEAL
CONTROL VALVE UPPER BEARING
13 (128, 9) *11 (113, 8)
POWER STEERING CONTROL VALVE
CONTROL VALVE LOWER OIL SEAL
CONTROL VALVE SPACER
COMPRESSION SPRING
GASKET
★RACK GUIDE SPRING CAP LOCK NUT
RACK HOUSING
RACK GUIDE
69 (699, 51) *48 (487, 35)
★RACK HOUSING CAP NUT
★RACK GUIDE SPRING CAP
25 (250, 18)
N*m (kgf*cm, ft.*lbf) : Specified torque
★RACK HOUSING CAP
54 (546, 40)
● Non-reusable part
★ Precoated part
Molybdenum disulfide lithium base grease
Power steering fluid
MP grease
* For use with SST
P
C114910E01

PS

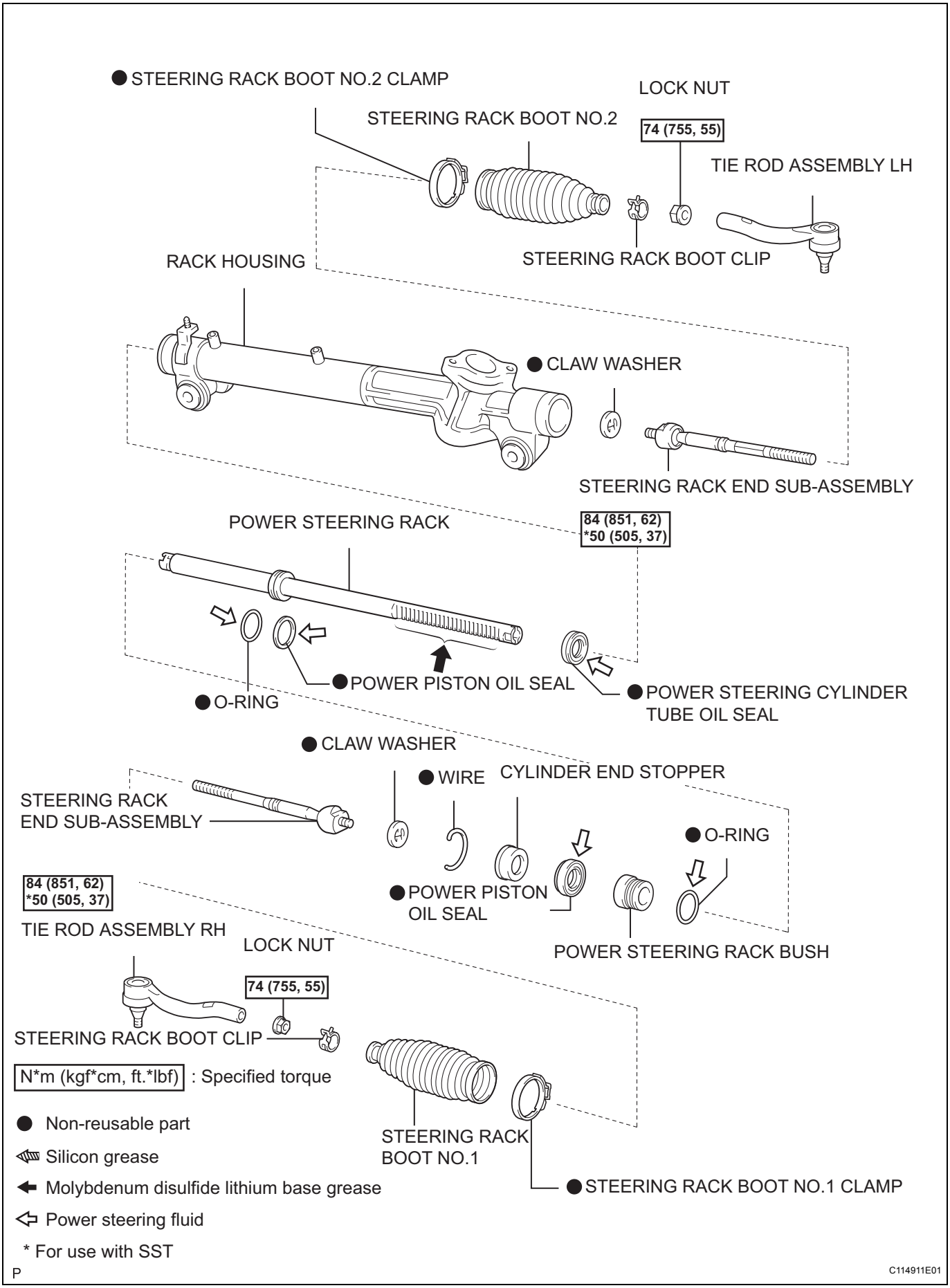
● STEERING RACK BOOT NO.2 CLAMP
LOCK NUT
STEERING RACK BOOT NO.2
74 (755, 55)
TIE ROD ASSEMBLY LH
STEERING RACK BOOT CLIP
RACK HOUSING
● CLAW WASHER
STEERING RACK END SUB-ASSEMBLY
POWER STEERING RACK
84 (851, 62)
*50 (505, 37)
● POWER PISTON OIL SEAL
● O-RING
● POWER STEERING CYLINDER TUBE OIL SEAL
● CLAW WASHER
● WIRE
CYLINDER END STOPPER
STEERING RACK END SUB-ASSEMBLY
● O-RING
84 (851, 62)
*50 (505, 37)
● POWER PISTON OIL SEAL
TIE ROD ASSEMBLY RH
LOCK NUT
POWER STEERING RACK BUSH
74 (755, 55)
STEERING RACK BOOT CLIP
N*m (kgf*cm, ft.*lbf) : Specified torque
● Non-reusable part
Silicon grease
Molybdenum disulfide lithium base grease
Power steering fluid
* For use with SST
STEERING RACK BOOT NO.1
● STEERING RACK BOOT NO.1 CLAMP
P
C114911E01

PS

REMOVAL

NOTICE:
When installing, coat the parts indicated by arrows with power steering fluid, MP grease, silicon grease or molybdenum disulfide lithium base grease (See page PS-18).

1. **PLACE FRONT WHEELS**
2. **REMOVE FRONT WHEEL**
3. **REMOVE FRONT FENDER APRON SEAL LH**
4. **REMOVE FRONT FENDER APRON SEAL RH**
5. **SEPARATE STEERING INTERMEDIATE SHAFT ASSEMBLY**
   (a) Fix the steering wheel with the seat belt in order to prevent rotation.
   HINT:
   This operation is useful to prevent damage to the spiral cable.

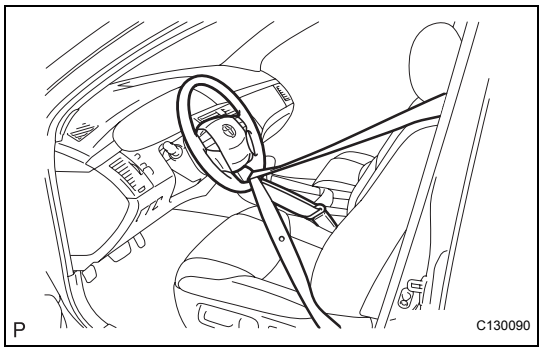

(b) Remove the bolt.

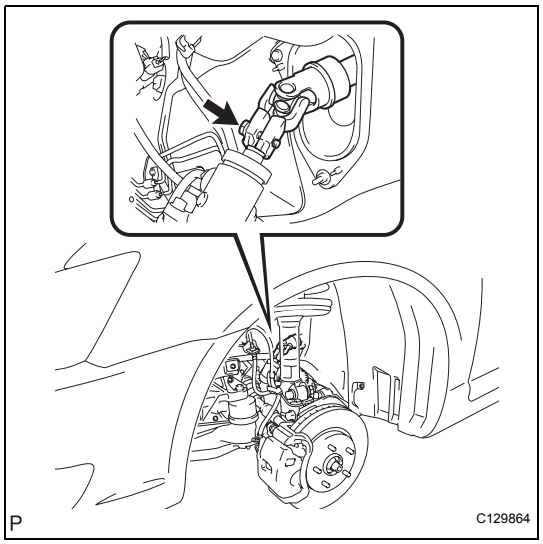

(c) Put matchmarks on the steering intermediate shaft assembly and the power steering gear assembly.
(d) Separate the intermediate shaft assembly from the steering gear assembly.

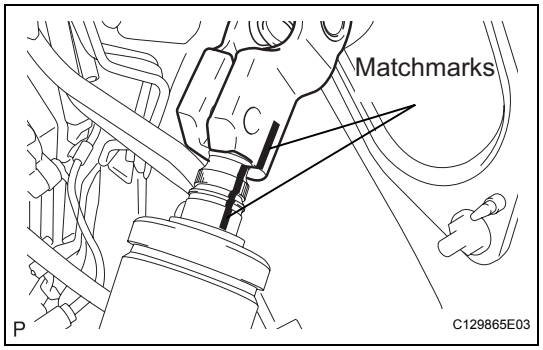

PS

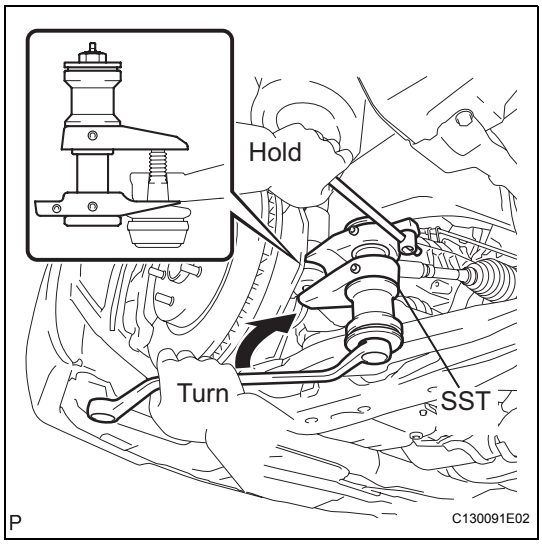

6. SEPARATE TIE ROD ASSEMBLY LH

(a) Remove the cotter pin and castle nut.

(b) Using SST, separate the tie rod assembly LH from the steering knuckle LH.
SST 09628-62011

7. SEPARATE TIE ROD ASSEMBLY RH
SST 09628-62011
HINT:
Perform the same procedure as for the LH side.

8. REMOVE FRONT STABILIZER LINK ASSEMBLY LH

9. REMOVE FRONT STABILIZER LINK ASSEMBLY RH
HINT:
Perform the same procedure as for the LH side.

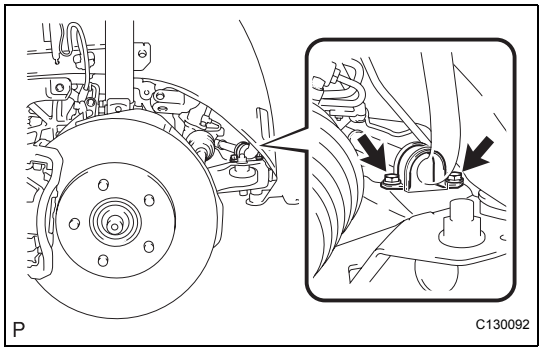

10. REMOVE FRONT STABILIZER BRACKET NO.1 LH

(a) Remove the 2 bolts and the stabilizer bracket No.1 LH and the stabilizer bar bush No.1.

11. REMOVE FRONT STABILIZER BRACKET NO.1 RH
HINT:
Perform the same procedure as for the LH side.

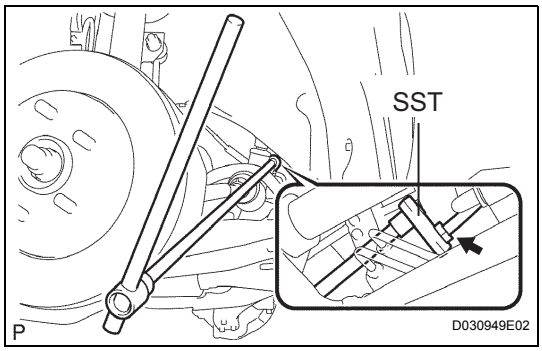

12. DISCONNECT PRESSURE FEED TUBE ASSEMBLY

(a) Using SST, disconnect the return tube assembly from the power steering gear assembly.
SST 09023-12701

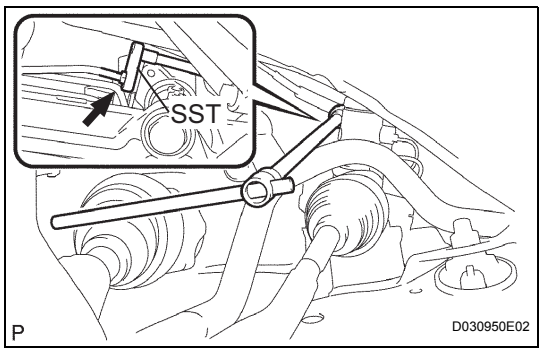

(b) Using SST, disconnect the pressure feed tube assembly from the power steering gear assembly.
SST 09023-12701

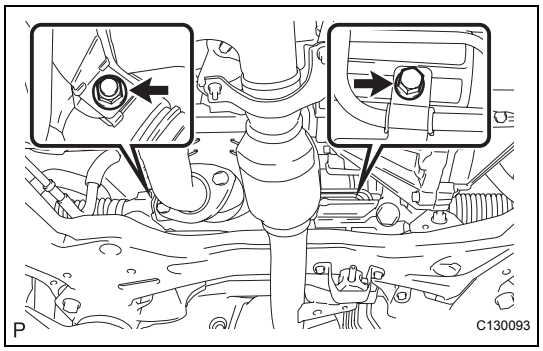

(c) Remove the 2 bolts and separate the pressure feed tube clamp from the power steering gear assembly.

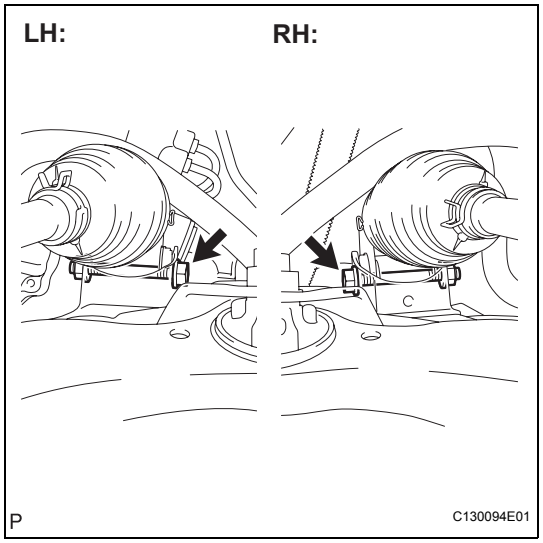

13. REMOVE RACK & PINION POWER STEERING GEAR ASSEMBLY

(a) Remove the 2 bolts, nuts and the power steering gear assembly.
NOTICE:
Do not turn the nut because the nut has its own stopper.
Loosen the bolt with the nut fixed.

DISASSEMBLY

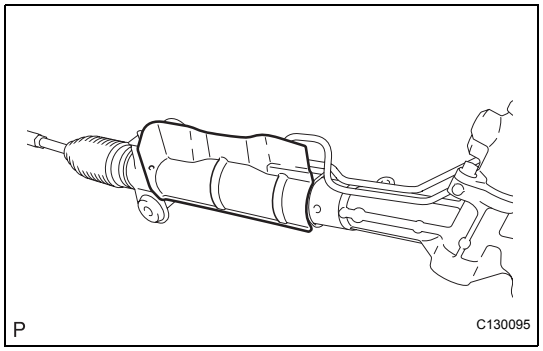

1. REMOVE POWER STEERING RACK HOUSING HEAT INSULATOR

(a) Remove power steering rack housing heat insulator.
NOTICE:
Be careful not to damage the heat insulator.

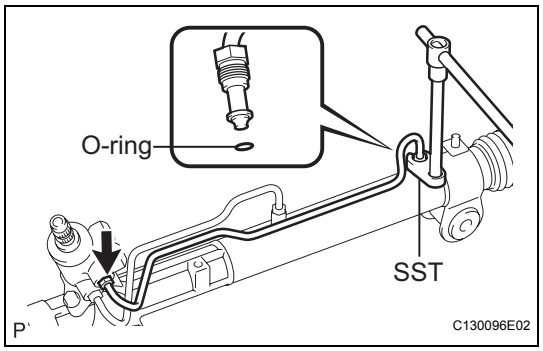

2. REMOVE STEERING RIGHT TURN PRESSURE TUBE

(a) Using SST, disconnect the right turn pressure tube.
SST 09023-38201

(b) Remove the 2 O-rings from the right turn pressure tube.

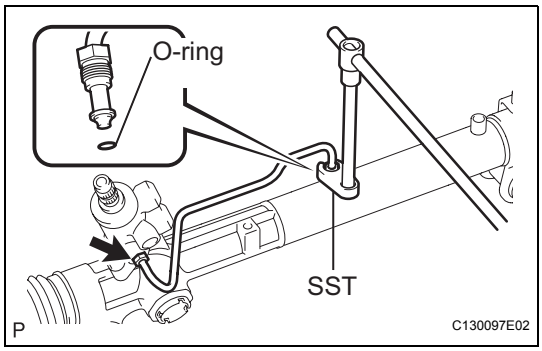

3. REMOVE STEERING LEFT TURN PRESSURE TUBE

(a) Using SST, disconnect the left turn pressure tube.
SST 09023-38201

(b) Remove the 2 O-rings from the left turn pressure tube.

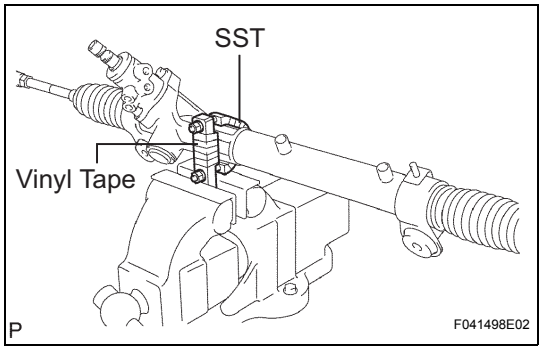

4. FIX RACK & PINION POWER STEERING GEAR ASSEMBLY

(a) Using SST, secure the power steering gear assembly.
SST 09612-00012
HINT:
Tape the SST before use.

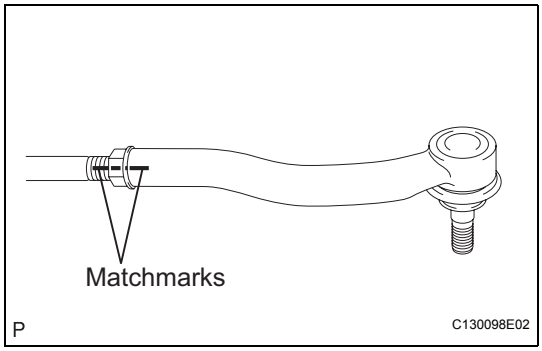

5. REMOVE TIE ROD ASSEMBLY LH

(a) Put matchmarks on the tie rod assembly LH and the steering rack end.

(b) Loosen the lock nut, and remove the tie rod assembly LH and the lock nut.

6. REMOVE TIE ROD ASSEMBLY RH

HINT:
Perform the same procedure as for the LH side.

7. REMOVE STEERING RACK BOOT CLIP

(a) Remove the 2 boot clips.

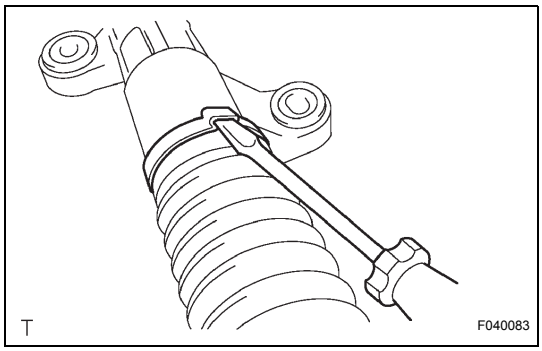

8. REMOVE STEERING RACK BOOT NO.2 CLAMP

(a) Using a screwdriver, remove the rack boot No.2 clamp.
NOTICE:
Be careful not to damage the steering rack boot.

9. REMOVE STEERING RACK BOOT NO.1 CLAMP

HINT:
Perform the same procedure as for the No.2 clamp.
NOTICE:
Be careful not to damage the boot.

10. REMOVE STEERING RACK BOOT NO.2

11. REMOVE STEERING RACK BOOT NO.1

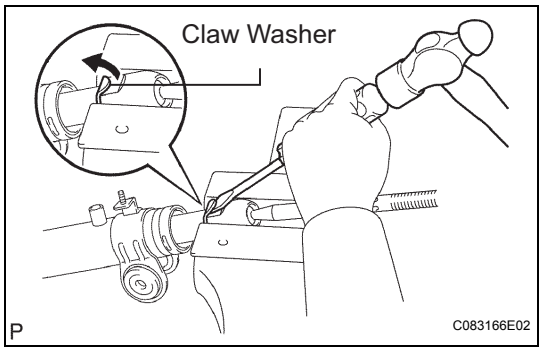

12. REMOVE STEERING RACK END SUB-ASSEMBLY

(a) Using a screwdriver and a hammer, unstake the RH and LH claw washers.
NOTICE:
Avoid any impact to the power steering rack.

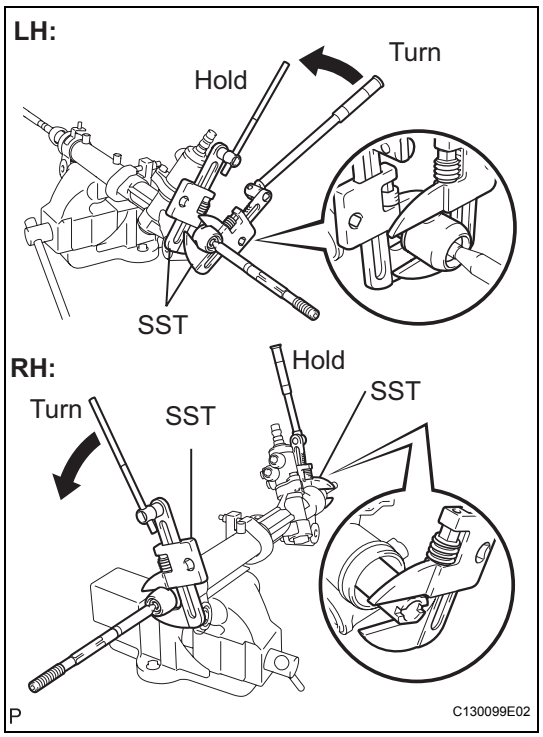

(b) Using SST, remove the steering rack end sub-assembly and the claw washer.
SST 09922-10010
NOTICE:
Use SST 09922-10010 in the direction shown in the illustration.

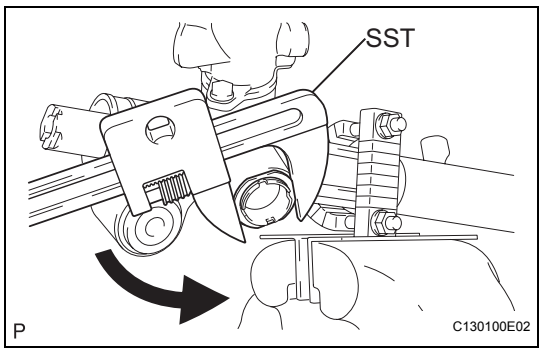

13. REMOVE RACK GUIDE

(a) Using SST, remove the spring cap lock nut.
SST 09922-10010
NOTICE:
Use SST 09922-10010 in the direction shown in the illustration.

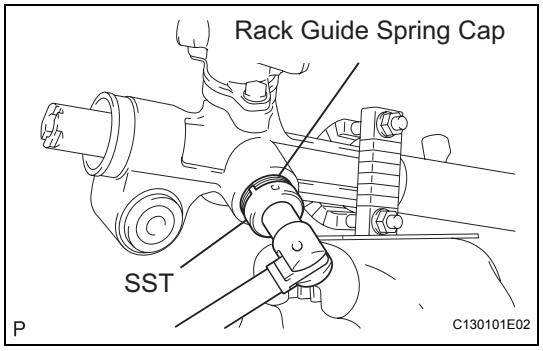

(b) Using SST, remove the rack guide spring cap.
SST 09631-10021

(c) Remove the compression spring and the rack guide.

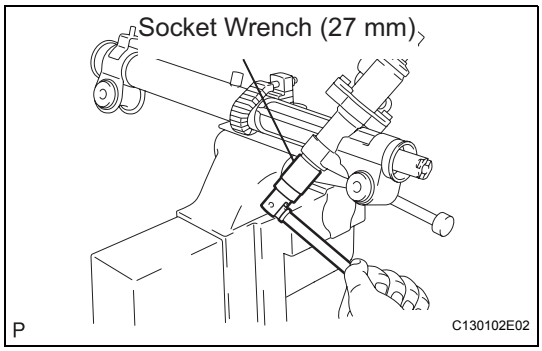

14. REMOVE POWER STEERING CONTROL VALVE

(a) Using a socket wrench (27 mm), remove the rack housing cap.

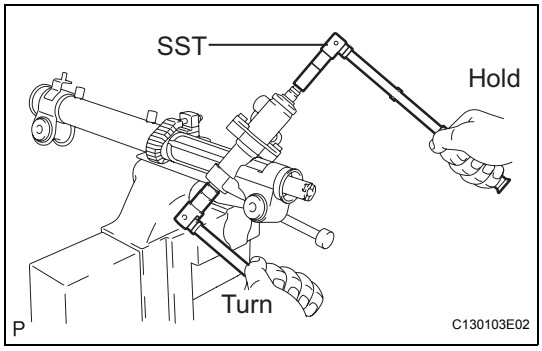

(b) Using SST, hold the control valve shaft and remove the nut.
SST 09616-00011

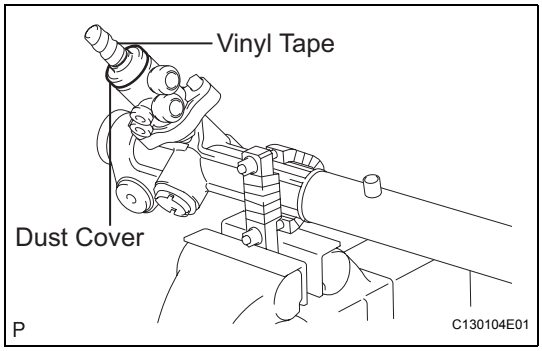

(c) Wrap vinyl tape around the spline of the control valve in order to prevent damaging the oil seal.
(d) Remove the dust cover from the control valve housing.

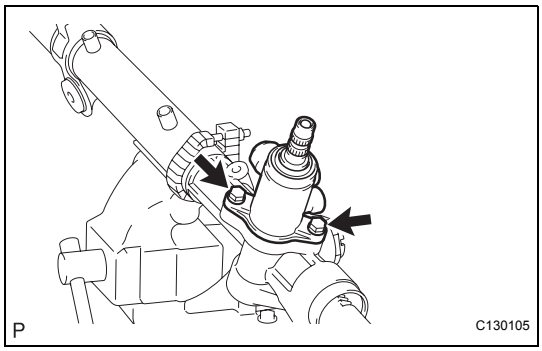

(e) Remove the 2 bolts and the control valve housing together with the control valve.
(f) Remove the gasket.

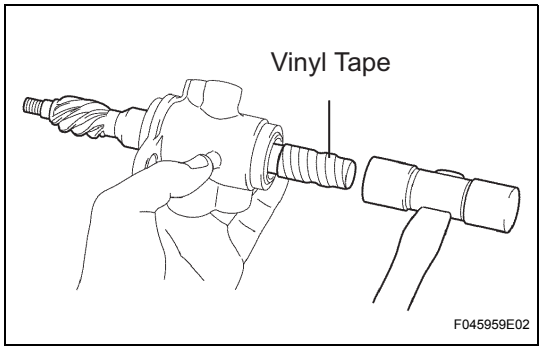

(g) Using a plastic hammer, remove the control valve.
(h) Remove the oil seal from the control valve.

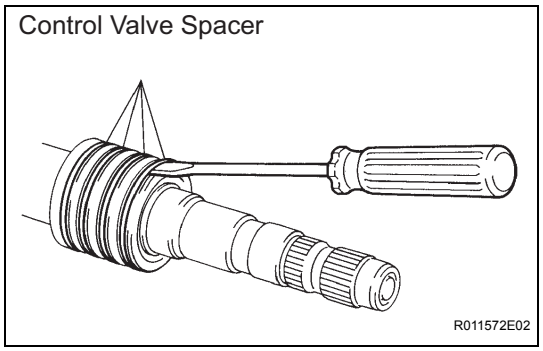

(i) Using a screwdriver, remove the 4 control valve spacers.
NOTICE:
Be careful not to damage the spacer grooves.

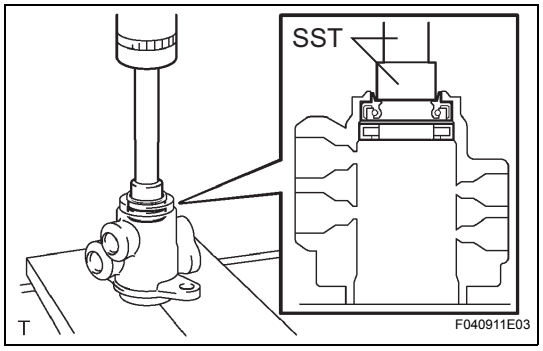

15. REMOVE POWER STEERING CONTROL VALVE OIL SEAL

(a) Using SST and a press, remove the control valve upper bearing and the upper oil seal from the control valve housing.
SST 09950-70010 (09951-07150), 09950-60010 (09951-00250)

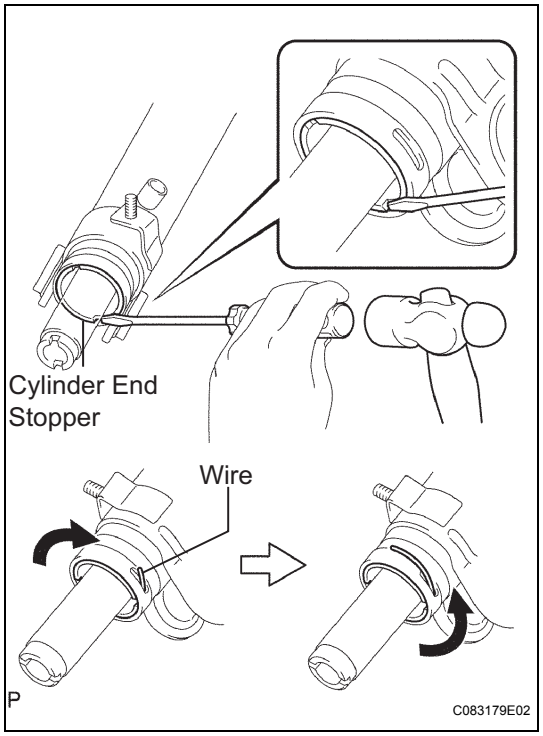

16. REMOVE CYLINDER END STOPPER

(a) Using a screwdriver and a hammer, turn the cylinder end stopper clockwise until the wire end is visible through the service hole.
(b) Using a screwdriver and a hammer, turn the cylinder end stopper counterclockwise, and remove the wire and the cylinder end stopper.

17. REMOVE POWER STEERING RACK

(a) Remove the steering rack from the rack housing.

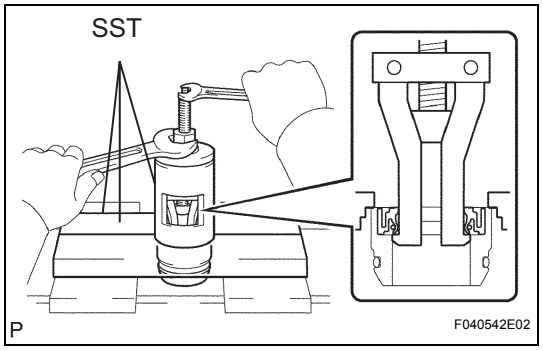

18. REMOVE POWER STEERING RACK BUSH

(a) Remove the rack bush with the rack bush oil seal from the steering rack.
(b) Using SST, remove the rack bush oil seal from the rack bush.
SST 09527-21011, 09612-24014 (09613-22011)
NOTICE:
Be careful not to drop the rack bush.
(c) Using a screwdriver, remove the O-ring from the rack bush.

PS

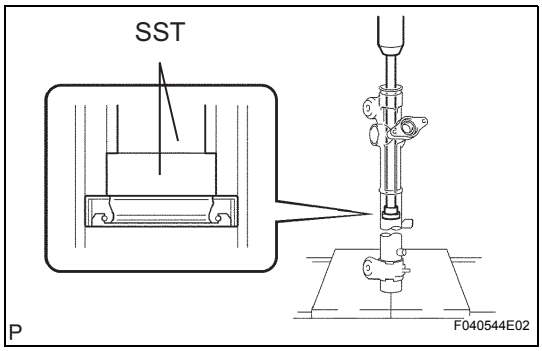

19. REMOVE POWER STEERING CYLINDER TUBE OIL SEAL

(a) Using SST and a press, remove the cylinder tube oil seal.

SST 09950-70010 (09951-07360), 09950-60010 (09951-00290)

NOTICE:

Be careful not to damage the inside surface of the rack housing.

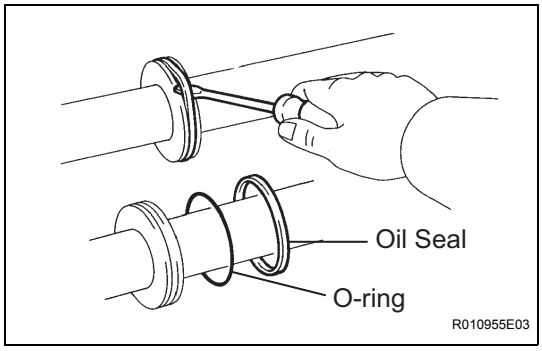

20. REMOVE POWER PISTON OIL SEAL

(a) Using a screwdriver, remove the oil seal and the O-ring.

NOTICE:

Be careful not to damage the oil seal groove.

INSPECTION

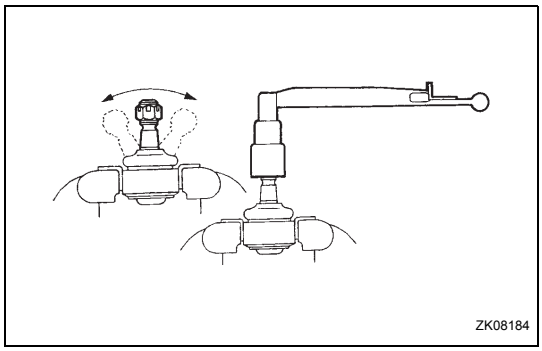

1. INSPECT TIE ROD ASSEMBLY LH

(a) Secure the tie rod assembly LH in a vise.

(b) Install the nut to the stud bolt.

(c) Flip the ball joint back and forth 5 times or more.

(d) Using a torx wrench, turn the nut continuously at a rate of 3 to 5 seconds per turn and take the torque reading on the 5th turn.

Turning torque:

0.98 to 3.92 N*m (10.0 to 40.0 kgf*cm, 8.7 to 34.7 in.*lbf)

If turning torque is not as specified, replace the tie rod assembly LH.

2. INSPECT TIE ROD ASSEMBLY RH

HINT:

Perform the same procedure as for the LH side.

REASSEMBLY

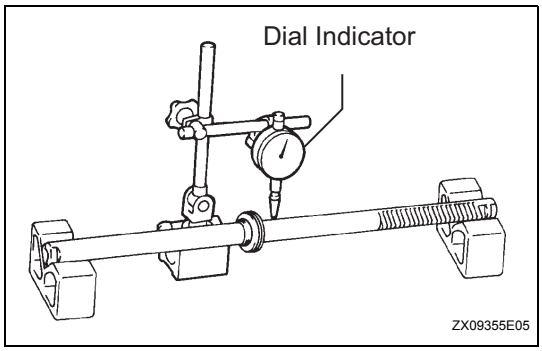

1. INSPECT POWER STEERING RACK

(a) Using a dial indicator, check for runout of the steering rack and teeth wear.

Maximum runout:

0.3 mm (0.0118 in.)

If runout exceeds the maximum, replace the power steering gear assembly.

(b) Check the rack surface for wear and damage.

If necessary, replace the power steering gear assembly.

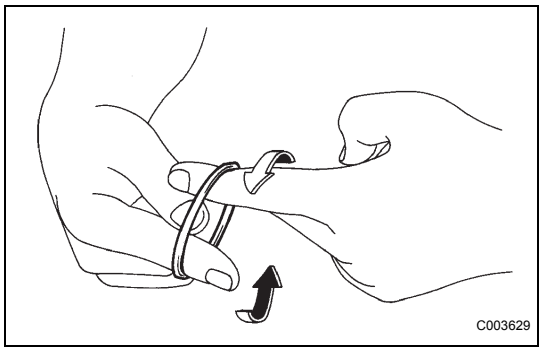

2. INSTALL POWER PISTON OIL SEAL

(a) Coat a new O-ring with power steering fluid and install it to the steering rack.

(b) Expand a new oil seal with your fingers.

NOTICE:

Be careful not to overly expand the oil seal.

(c) Coat the oil seal with power steering fluid.

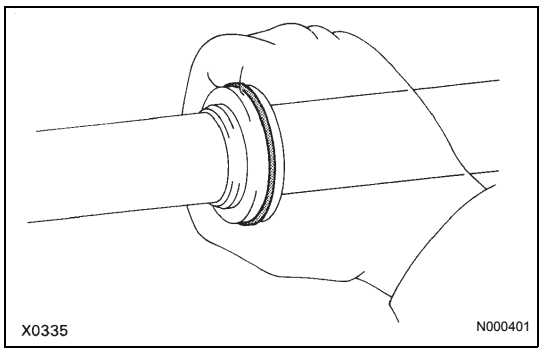

(d) Install the oil seal to the steering rack, and adjust with your fingers.

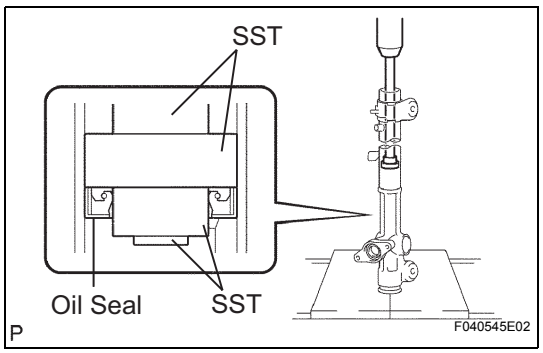

3. INSTALL POWER STEERING CYLINDER TUBE OIL SEAL

(a) Coat a new cylinder tube oil seal lip with power steering fluid.

(b) Using SST and a press, install the cylinder tube oil seal.

SST 09950-60010 (09951-00420, 09951-00250, 09952-06010), 09950-70010 (09951-07360)

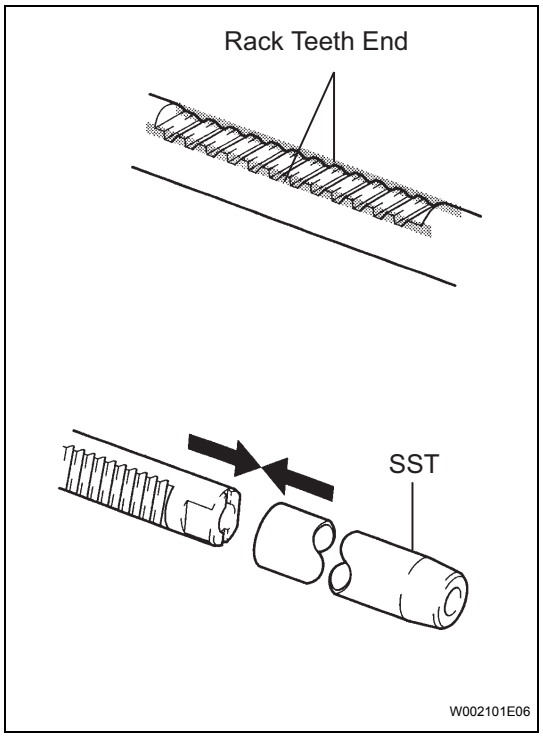

4. INSTALL POWER STEERING RACK

(a) Apply grease to the rack teeth ends.

(b) Affix SST to the steering rack.

SST 09631-33010

HINT:

If necessary, scrape the burrs off the rack teeth ends and burnish.

(c) Coat the SST and the power piston oil seal with power steering fluid.

(d) Install the steering rack to the rack housing.

(e) Remove the SST.

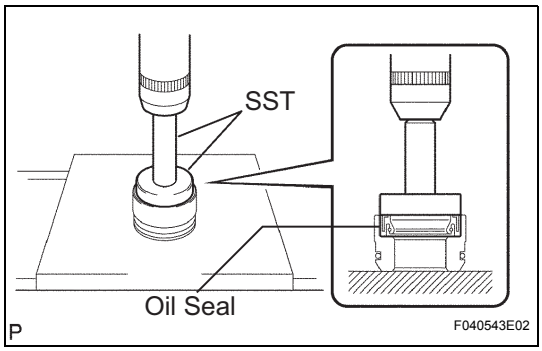

5. INSTALL POWER STEERING RACK BUSH

(a) Coat a new rack bush oil seal lip with power steering fluid.

(b) Using SST and a press, install the rack bush oil seal to the rack bush.

SST 09950-60010 (09951-00400), 09950-70010 (09951-07100)

NOTICE:

Make sure that the oil seal is installed correctly.

(c) Coat a new O-ring with power steering fluid and install it to the rack bush.

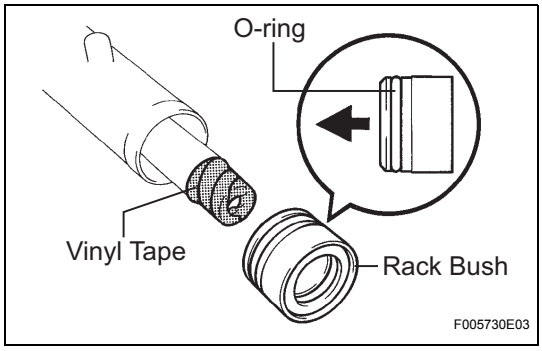

(d) Install the rack bush to the rack housing.

HINT:

Wrap vinyl tape around the end of the steering rack in order to prevent damaging the rack bush oil seal.

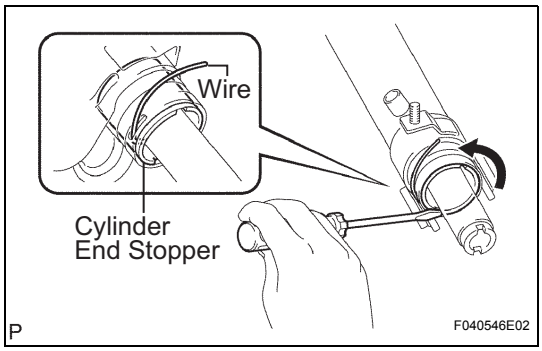

6. INSTALL CYLINDER END STOPPER

(a) Align the installation hole for the wire of the cylinder end stopper with the slot of the rack housing.

(b) Install a new wire into the cylinder end stopper.

(c) Using a screwdriver, turn the cylinder end stopper counterclockwise by 450°+-50°.

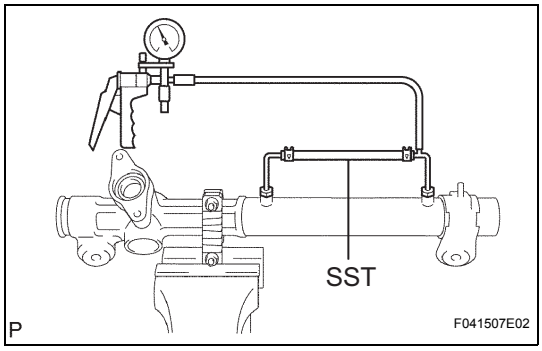

7. AIR TIGHTNESS TEST

(a) Install SST to the rack housing.

SST 09631-12071

(b) Apply a vacuum of 53 kPa (398 mmHg, 15.65 in. Hg) for approximately 30 seconds.

(c) Check that there is no change in the vacuum pressure.

If there is a change in the vacuum pressure, check the installation of the oil seals.

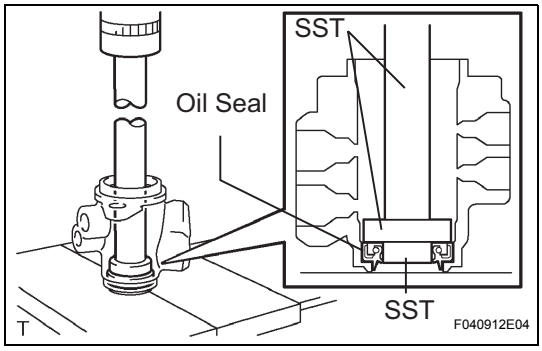

8. INSTALL POWER STEERING CONTROL VALVE OIL SEAL

(a) Coat the control valve upper bearing with grease.

(b) Coat a new control valve upper oil seal lip with power steering fluid.

(c) Using SST and a press, install the control valve upper oil seal.

SST 09950-70010 (09951-07150), 09950-60010 (09951-00180, 09952-06010, 09951-00320)

PS

NOTICE:
Make sure that the oil seal is installed in the correct direction.

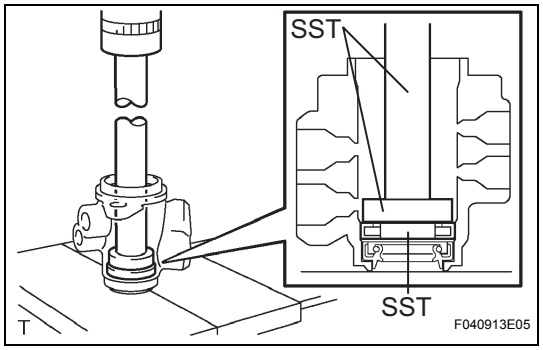

(d) Using SST and a press, install the control valve upper bearing.
SST 09950-70010 (09951-07150), 09950-60010 (09951-00180, 09952-06010, 09951-00340)

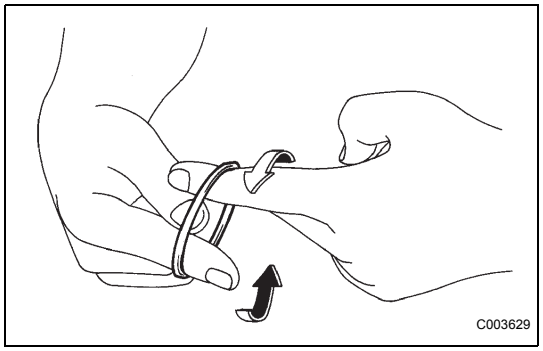

9. INSTALL POWER STEERING CONTROL VALVE

(a) Expand 4 new valve spacers with your fingers.
NOTICE:
Be careful not to overly expand the valve spacers.

(b) Coat the 4 valve spacers with power steering fluid.

(c) Install the 4 valve spacers to the control valve, and adjust with your fingers.

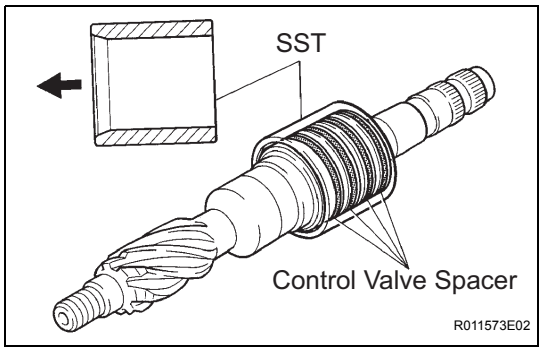

(d) Carefully slide the tapered end of SST over the valve spacers until they fit to the control valve.
SST 09631-20081
NOTICE:
Be careful not to damage the valve spacers.

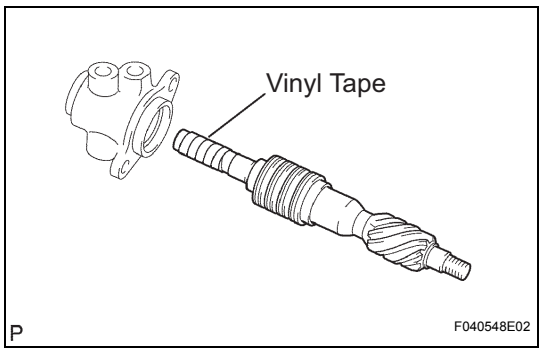

(e) Install the control valve into the valve housing.
NOTICE:
Be careful not to damage the valve spacers and the oil seal lip.
HINT:
Wrap vinyl tape around the serrated part of the control valve in order to prevent damaging the oil seal.

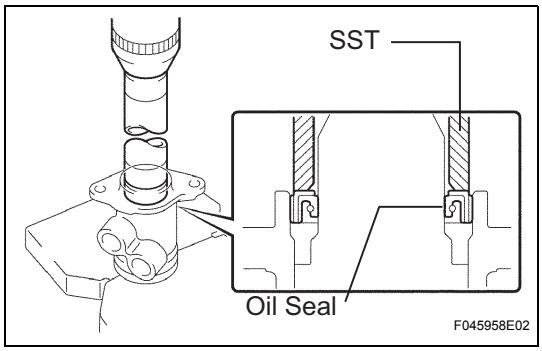

(f) Coat a new oil seal lip with power steering fluid.
(g) Using SST and a press, install the oil seal.
SST 09612-22011
NOTICE:
Make sure that the oil seal is installed in the correct direction.
(h) Apply grease to the needle roller bearing of the rack housing and the serrated part of the control valve.
(i) Install a new gasket to the control valve housing.

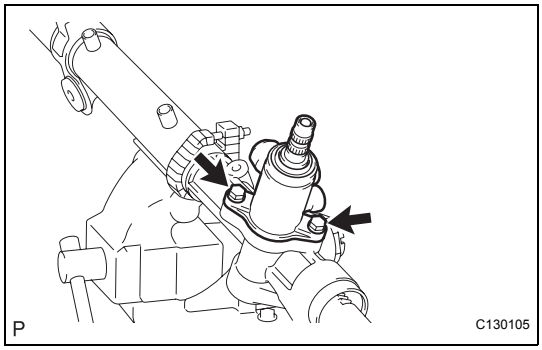

(j) Install the control valve housing together with the control valve to the rack housing with the 2 bolts.
Torque: 20 N*m (204 kgf*cm, 15 ft.*lbf)

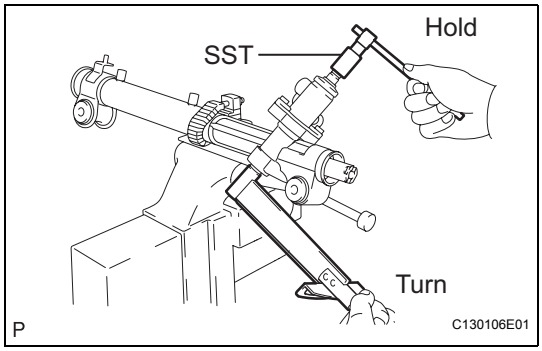

(k) Using SST, hold the control valve from rotating and install a new lock nut.
SST 09616-00011
Torque: 25 N*m (250 kgf*cm, 18 ft.*lbf)
(l) Apply sealant to 2 or 3 threads of the rack housing cap.
Sealant:
Part No. 08833-00080, THREE BOND 1344, LOCTITE 242 or equivalent

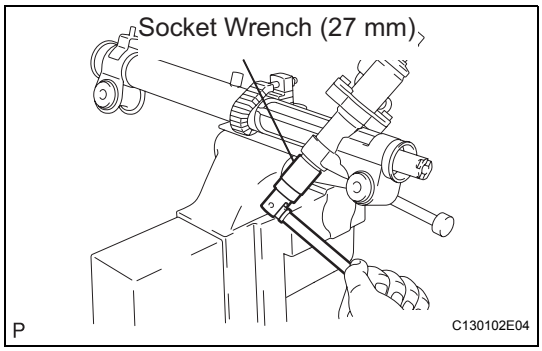

(m) Using a socket wrench (27 mm), install the rack housing cap.
Torque: 54 N*m (546 kgf*cm, 40 ft.*lbf)

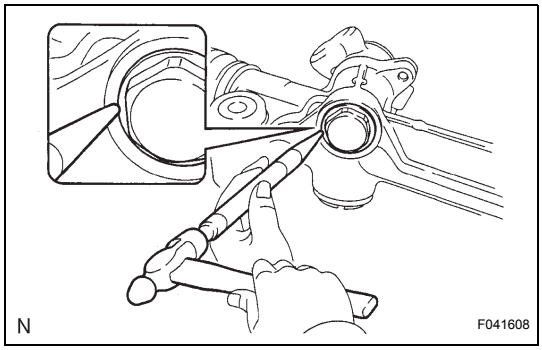

(n) Using a punch and a hammer, stake the rack housing cap and the rack housing.

10. INSTALL RACK GUIDE
(a) Apply grease to the contact surface of the rack guide.
(b) Install the rack guide and the compression spring.

(c) Apply sealant to 2 or 3 threads of the rack guide spring cap.
Sealant:
Part No. 08833-00080, THREE BOND 1344. LOCTITE 242 or equivalent
(d) Temporarily install the rack guide spring cap.

11. ADJUST TOTAL PRELOAD

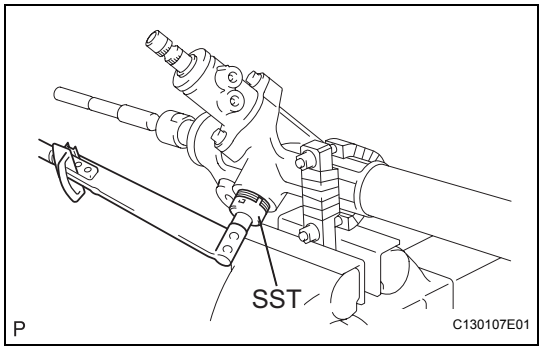

(a) Temporarily install the RH and the LH rack end sub-assembly, in order to prevent the oil seal from being damaged by the rack teeth.
(b) Using SST, torque the rack guide spring cap.
SST 09631-10021
Torque: 25 N*m (250 kgf*cm, 18 ft.*lbf)

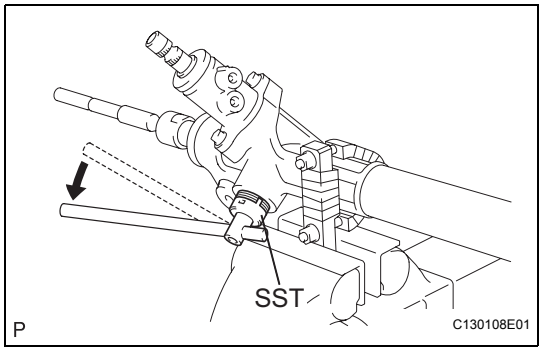

(c) Using SST, loosen the rack guide spring cap.
SST 09631-10021

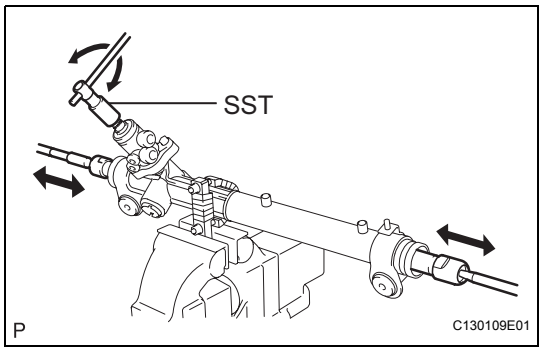

(d) Using SST, turn the control valve left and right 1 or 2 times.
SST 09616-00011
(e) Using SST, loosen the rack guide spring cap until the compression spring stops functioning.
SST 09631-10021

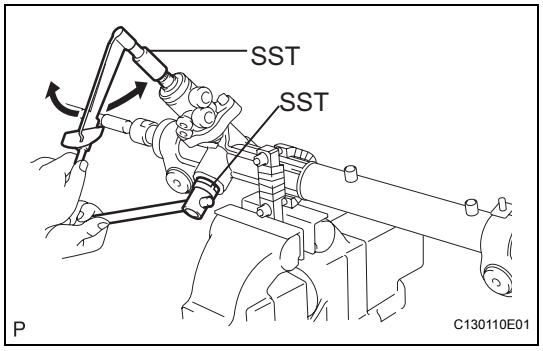

(f) Using SST and a torque wrench, tighten the rack guide spring cap until the preload falls within the specified range.
Preload (turning):
1.2 to 1.5 N*m (12.2 to 15.3 kgf*cm, 10.6 to 13.3 in.*lbf)
SST 09616-00011, 09631-10021
(g) Apply sealant to 2 or 3 threads of the rack guide spring cap lock nut.
Sealant:
Part No. 08833-00080, THREE BOND 1344, LOCTITE 242 or equivalent
(h) Temporarily install the rack guide spring cap lock nut.

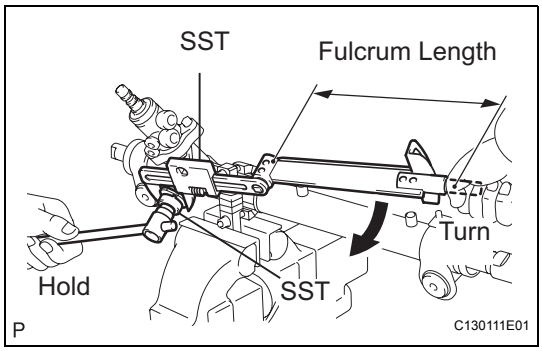

(i) Using SST, hold the rack guide spring cap and using another SST, torque the spring cap lock nut.
SST 09616-00011, 09922-10010
Torque: 48 N*m (487 kgf*cm, 35 ft.*lbf)
NOTICE:
- **Use SST 09922-10010 in the direction shown in the illustration.**
- **Use a torque wrench with a fulcrum length of 345 mm (13.58 in).**

(j) Recheck the total preload.
Preload (turning):
1.2 to 1.5 N*m (12.2 to 15.3 kgf*cm, 10.6 to 13.3 in.*lbf)

(k) Remove the RH and the LH rack end sub-assembly.

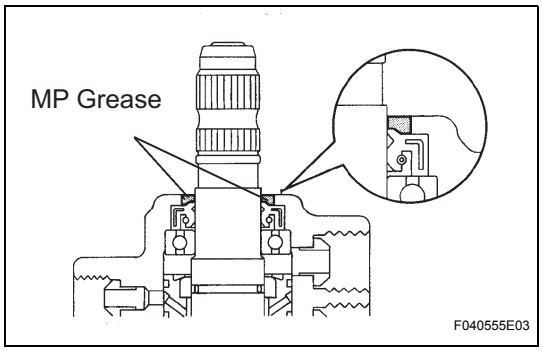

(l) Apply MP grease around the control valve shaft, as shown in the illustration.

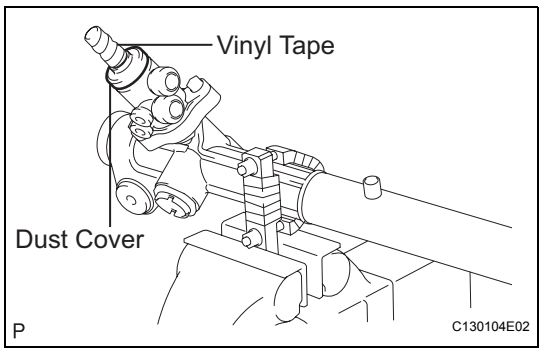

(m) Wrap vinyl tape around the spline of the control valve.

(n) Install the dust cover to the control valve housing.

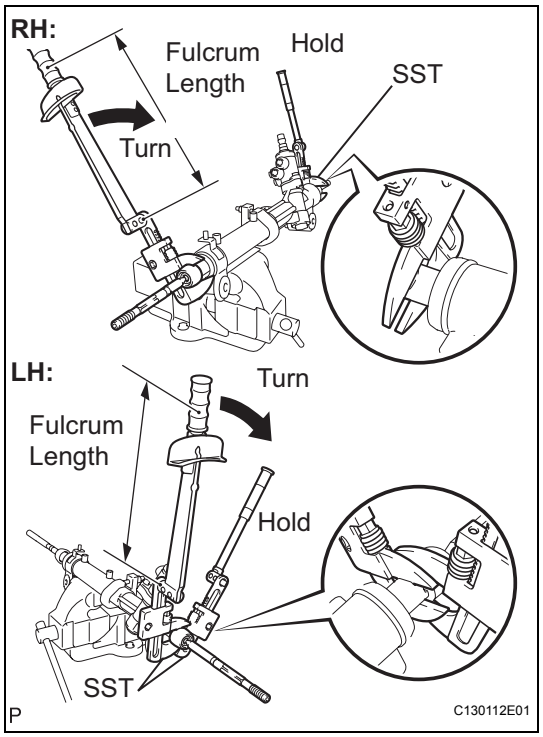

12. INSTALL STEERING RACK END SUB-ASSEMBLY

(a) Install 2 new claw washers, and temporarily install the LH and the RH steering rack end sub-assembly.
HINT:
Align the claws of the claw washer with the steering rack grooves.

(b) Using SST, install the 2 steering rack end sub-assembly.
SST 09922-10010
Torque: 58 N*m (586 kgf*cm, 42 ft.*lbf)
NOTICE:
- **Use SST 09922-10010 in the direction shown in the illustration.**
- **Use a torque wrench with a fulcrum length of 345 mm (13.58 in.).**

HINT:
Using SST, hold the rack and install the steering rack end sub-assembly.

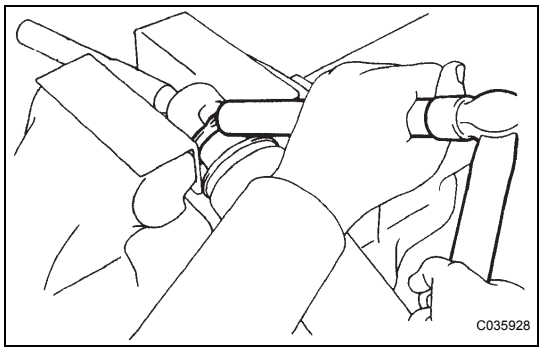

(c) Using a brass bar and a hammer, stake the 2 claw washers.
NOTICE:
Avoid any impact to the steering rack.

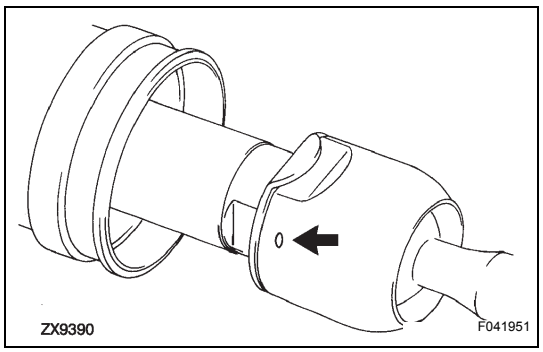

13. INSPECT POWER STEERING RACK

(a) Ensure that the holes of the steering rack ends are not clogged with grease.
HINT:
If the holes are clogged, the pressure inside the boot will change after it is assembled and the steering wheel is turned.

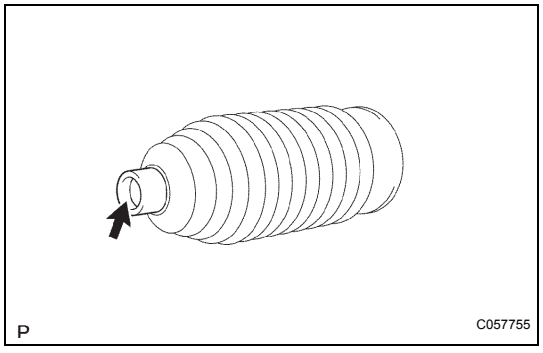

14. INSTALL STEERING RACK BOOT NO.2

(a) Apply silicon grease to the inside of the small opening of the rack boot No.2.

(b) Install the rack boot No.2 to the groove on the rack housing.
NOTICE:
Be careful not to damage or twist the boot.

15. INSTALL STEERING RACK BOOT NO.1
HINT:
Perform the same procedure as for the rack boot No.2.

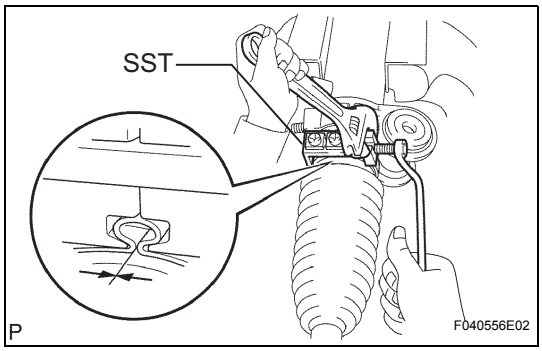

16. INSTALL STEERING RACK BOOT NO.2 CLAMP

(a) Using SST, tighten the rack boot No.2 clamp, as shown in the illustration.

SST 09521-24010

Clearance:

2.0 mm (0.079 in.) or less

NOTICE:

Be careful not to damage the boot.

17. INSTALL STEERING RACK BOOT NO.1 CLAMP

SST 09521-24010

HINT:

Perform the same procedure as for the No.2 clamp.

18. INSTALL STEERING RACK BOOT CLIP

(a) Using pliers, install the 2 boot clips.

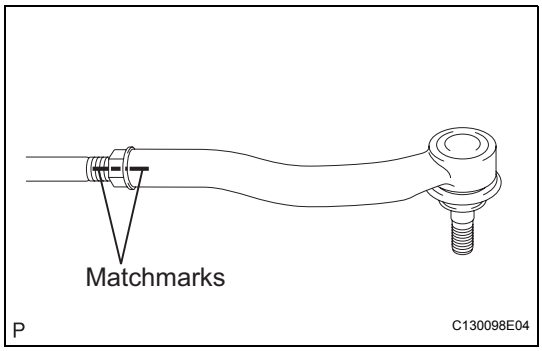

19. INSTALL TIE ROD ASSEMBLY LH

(a) Screw the lock nut and the tie rod assembly LH to the rack end until the matchmarks are aligned.

HINT:

After adjusting toe-in, torque the lock nut.

20. INSTALL TIE ROD ASSEMBLY RH

HINT:

Perform the same procedure as for the LH side.

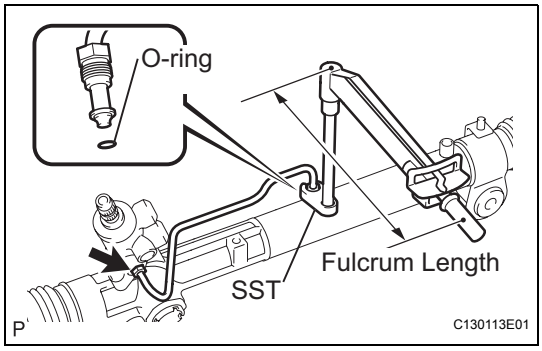

21. INSTALL STEERING LEFT TURN PRESSURE TUBE

(a) Coat 2 new O-rings with power steering fluid and install them to the left turn pressure tube.

(b) Using SST, install the left turn pressure tube to the power steering gear assembly.

SST 09023-38201

Torque: 11 N*m (113 kgf*cm, 8 ft.*lbf)

NOTICE:

Use a torque wrench with a fulcrum length of 250 mm (9.84 in.).

HINT:

This torque value is effective when SST is parallel to the torque wrench.

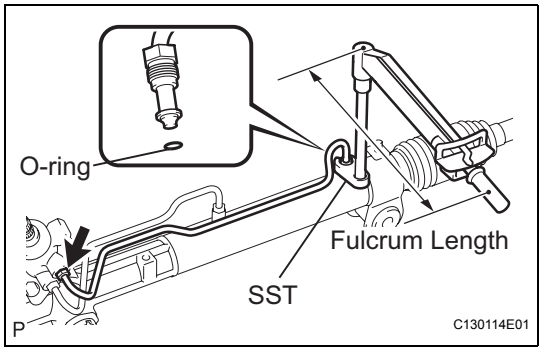

22. INSTALL STEERING RIGHT TURN PRESSURE TUBE

(a) Coat 2 new O-rings with power steering fluid and install them to the right turn pressure tube.

(b) Using SST, install the right turn pressure tube to the power steering gear assembly.

SST 09023-38201

Torque: 11 N*m (113 kgf*cm, 8 ft.*lbf)

NOTICE:

Use a torque wrench with a fulcrum length of 250 mm (9.84 in.).

HINT:

This torque value is effective when SST is parallel to the torque wrench.

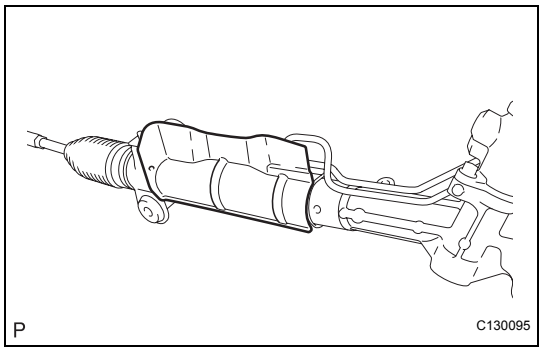

23. INSTALL POWER STEERING RACK HOUSING HEAT INSULATOR

(a) Install the power steering rack housing heat insulator.
NOTICE:
Be careful not to damage the heat insulator.

INSTALLATION

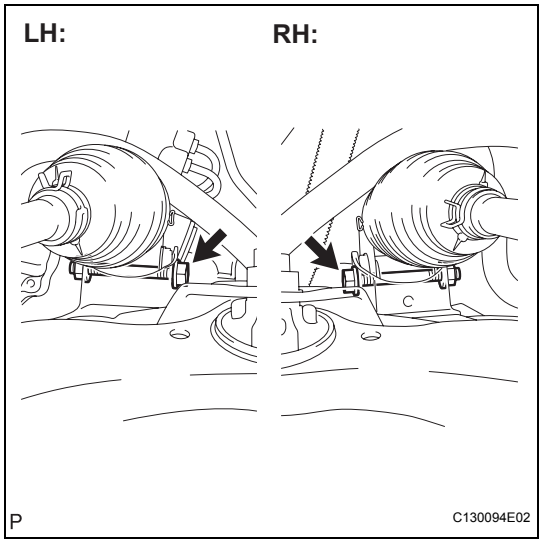

1. INSTALL RACK & PINION POWER STEERING GEAR ASSEMBLY

(a) Install the power steering gear assembly with the 2 bolts and 2 nuts.
Torque: 70 N*m (714 kgf*cm, 52 ft.*lbf)
NOTICE:
Do not turn the nut because the nut has its own stopper. Tighten the bolt with the nut fixed.

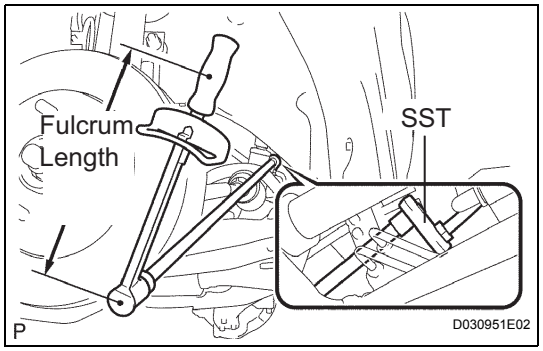

2. CONNECT PRESSURE FEED TUBE ASSEMBLY

(a) Using SST, connect the pressure feed tube assembly to the power steering gear assembly.
SST 09023-12701
Torque: 22 N*m (227 kgf*cm, 16 ft.*lbf)
NOTICE:
Use a torque wrench with a fulcrum length of 300 mm (11.81 in.).
HINT:
This torque value is effective when SST is parallel to the torque wrench.

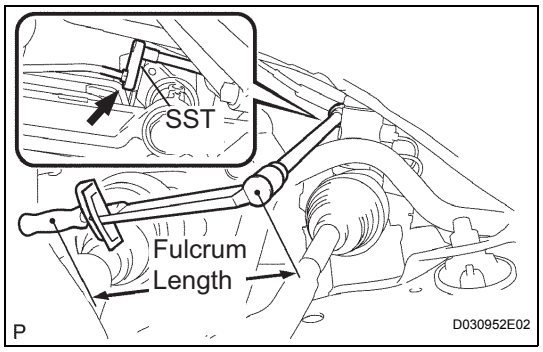

(b) Using SST, connect the return tube assembly to the power steering gear assembly.
SST 09023-12701
Torque: 22 N*m (227 kgf*cm, 16 ft.*lbf)
NOTICE:
Use a torque wrench with a fulcrum length of 300 mm (11.81 in.).
HINT:
This torque value is effective when SST is parallel to the torque wrench.

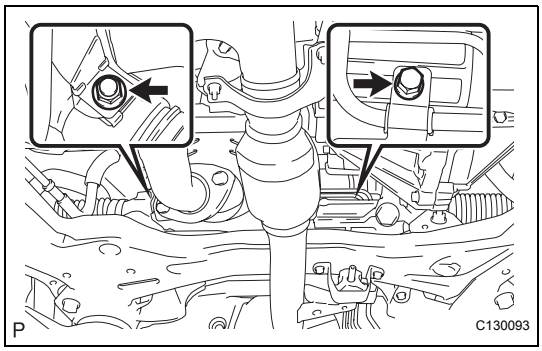

(c) Install the pressure feed tube clamp with the 2 bolts.
Torque: 9.8 N*m (100 kgf*cm, 87 in.*lbf)

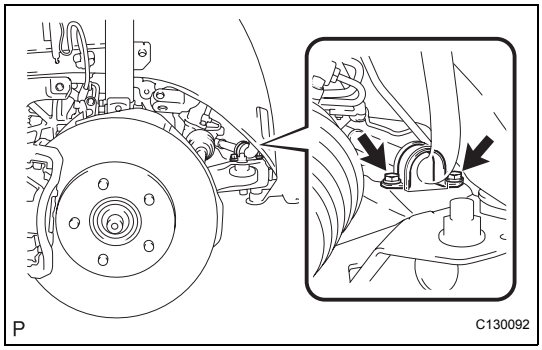

3. INSTALL FRONT STABILIZER BRACKET NO.1 LH

(a) Install the stabilizer bar bush No.1 to the stabilizer bar.

(b) Install the front stabilizer bracket No.1 LH with the 2 bolts.
Torque: 19 N*m (194 kgf*cm, 14 ft.*lbf)

4. INSTALL FRONT STABILIZER BRACKET NO.1 RH

HINT:
Perform the same procedure as for the LH side.

5. INSTALL FRONT STABILIZER LINK ASSEMBLY LH

6. INSTALL FRONT STABILIZER LINK ASSEMBLY RH

HINT:
Perform the same procedure as for the LH side.

7. CONNECT TIE ROD ASSEMBLY LH

(a) Connect the tie rod assembly LH to the steering knuckle LH with the castle nut.
Torque: 49 N*m (500 kgf*cm, 36 ft.*lbf)

(b) Install a new cotter pin.
NOTICE:
If the holes for the cotter pin are not aligned, tighten the nut up to 60°further.

8. CONNECT TIE ROD ASSEMBLY RH

HINT:
Perform the same procedure as for the LH side.

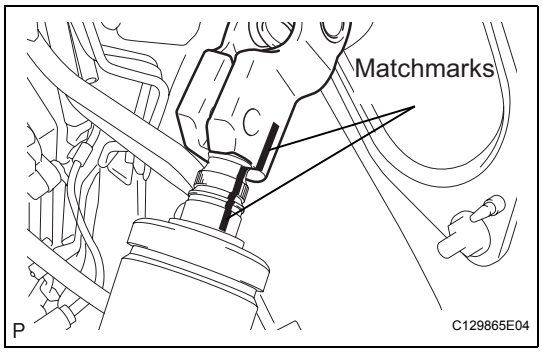

9. CONNECT STEERING INTERMEDIATE SHAFT ASSEMBLY

(a) Align the matchmarks on the steering intermediate shaft assembly and the power steering gear assembly.

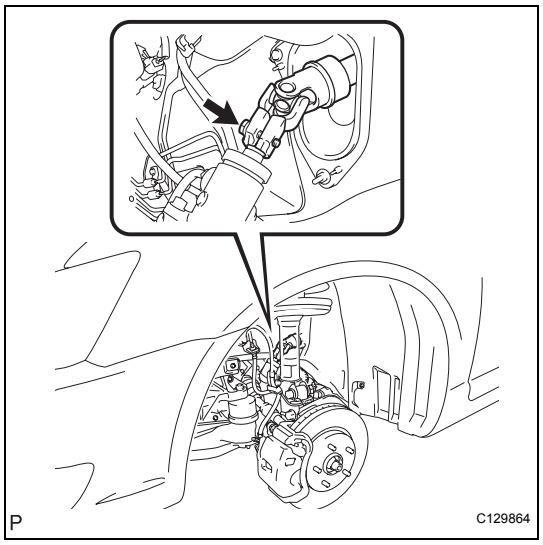

(b) Install the bolt.
Torque: 35 N*m (360 kgf*cm, 26 ft.*lbf)

10. **BLEED POWER STEERING FLUID**
HINT:
(See page PS-3)

11. **CHECK FOR FLUID LEAKS**

12. **INSTALL FRONT FENDER APRON SEAL LH**

13. **INSTALL FRONT FENDER APRON SEAL RH**

14. **INSTALL FRONT WHEEL**

15. **INSPECT FRONT WHEELS**

16. **INSPECT FRONT WHEEL ALIGNMENT**
HINT:
(See page SP-4)

2GR-FE ENGINE CONTROL SYSTEM

RECOMMENDED TOOLS

	09082-00040	TOYOTA Electrical Tester	
	(09083-00150)	Test Lead Set	

EQUIPMENT

Ohmmeter	
Radiator cap tester	
Service Wire Harness	
Torque wrench	

2GR-FE ENGINE MECHANICAL

SST

	09032-00100	Oil Pan Seal Cutter	
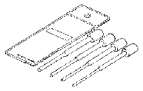	09201-10000	Valve Guide Bushing Remover & Replacer Set	
	(09201-01050)	Valve Guide Bushing Remover & Replacer 5	
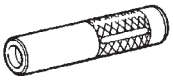	09201-41020	Valve Stem Oil Seal Replacer	
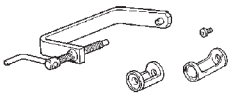	09202-70020	Valve Spring Compressor	
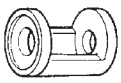	(09202-00010)	Attachment	
	09213-70011	Crankshaft Pully Holding Tool	
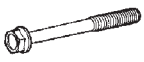	(09213-70020)	Bolt	
	09222-30010	Connecting Rod Bushing Remover & Replacer	
	09223-15030	Oil Seal & Bearing Replacer	
	09228-06501	Oil Filter Wrench	

	09249-63010	Torque Wrench Adaptor	
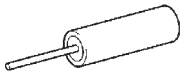	09276-75010	Valve Lifter Tool	
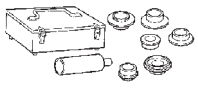	09316-60011	Transmission & Transfer Bearing Replacer	
	(09316-00011)	Replacer Pipe	
	09330-00021	Companion Flange Holding Tool	
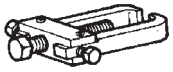	09628-62011	Boll Joint Puller	
	09843-18030	Tacho-pulse Pickup Wire No.2	
	09843-18040	Diagnosis Check Wire No.2	
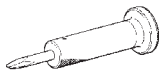	09930-00010	Drive Shaft Nut Chisel	
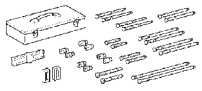	09950-50013	Puller C Set	
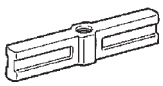	(09951-05010)	Hanger 150	
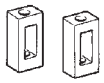	(09952-05010)	Slide Arm	

PP

	(09953-05020)	Center Bolt 150	
	(09954-05021)	Claw No.2	
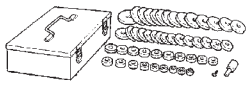	09950-60010	Replacer Set	
	(09951-00340)	Replacer 34	
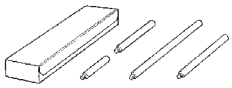	09950-70010	Handle Set	
	(09951-07100)	Handle 100	
	(09951-07150)	Handle 150	

RECOMMENDED TOOLS

	09011-12301	Socket Wrench 30 mm	
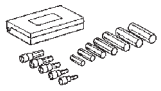	09040-00011	Hexagon Wrench Set	
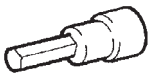	(09043-20050)	Socket Hexagon Wrench 5	
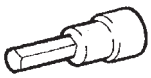	(09043-20060)	Socket Hexagon Wrench 6	
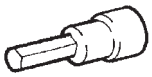	(09043-20080)	Socket Hexagon Wrench 8	
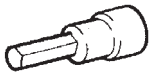	(09043-20100)	Socket Hexagon Wrench 10	
	(09043-30140)	Straight Hexagon Wrench 14	
	09043-30190	Straight Hexagon Wrench 19	
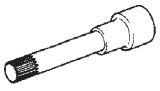	09043-50100	Bi-hexagon Wrench 10 mm	
	09090-04020	Engine Sling Device	
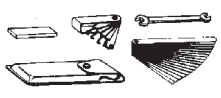	09200-00010	Engine Adjust Kit	

PP

	(09857-00031)	Spark Plug Gap Gauge	

EQUIPMENT

Abrasive compound	
Brush	
Caliper gauge	
Carbide cutter (30°)	
Carbide cutter (45°)	
Carbide cutter (60°)	
Carbide cutter (75°)	
Connecting rod aligner	
Cylinder gauge	
Dial indicator	
Dye penetrant	
Engine tune-up tester	
Groove cleaning tool	
Heater	
Micrometer	
Pin hole grinder	
Piston ring compressor	
Piston ring expander	
Plastigage	
Precision straight edge	
Press	
Reamer (5.5 mm)	
Ridge reamer	
Soft brush	
Solvent	
Spring tester	
Steel square	
Thermometer	
Torque wrench	
Torx socket wrench	
Valve seat cutter	
Valve guide bushing brush	
V-block	
Vernier caliper	
Wire brush	
Bar	
Chain Block	
CO/HC meter	
Compression gauge	
Dial indicator with magnetic base	
Engine Sling Device	
Feeler gauge	
Radiator cap tester	
Slide calipers	
Tachometer	
Timing light	
Wooden block	
Deep socket wrench 24 mm	

SSM

	08826-00080	Seal Packing Black or equivalent (FIPG)	
	08826-00100	Seal Packing 1282B, THREE BOND 1282B or equivalent (FIPG)	
	08833-00070	Adhesive 1324, THREE BOND 1324 or equivalent	
	08833-00080	Adhesive 1344 THREE BOND 1344 LOCTITE 242 or equivalent	

2GR-FE FUEL

SST

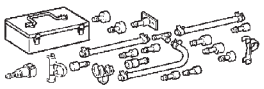	09268-41048	Injection Measuring Tool Set	
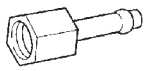	(09268-41130)	Adapter	
	(09268-41500)	Fuel Tube Connector	
	(90467-13001)	Clip	
	(95336-08070)	Hose	
	09268-41400	Clamp	
	09268-45014	EFI Fuel Pressure Gauge	
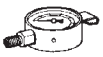	(09268-41200)	Gauge	
	(09268-41220)	Hose	
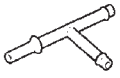	(09268-41250)	T Joint	
	09842-30080	Wire H EFI Inspection	

RECOMMENDED TOOLS

	09082-00040	TOYOTA Electrical Tester	
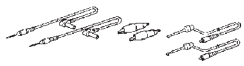	(09083-00150)	Test Lead Set	

EQUIPMENT

Clip	
Measuring Flask	
Ohmmeter	
Radiator cap tester	
Service Wire Harness	
Stopwatch	
Clip	
Torque wrench	
Vernier calipers	

SSM

	08850-00065	Butyl Tape Set	

2GR-FE EMISSION CONTROL

SST

	09224-00010	O2 Sensor Wrench	
	09992-00242	Turbocharger Pressure Gauge	

RECOMMENDED TOOLS

	09082-00040	TOYOTA Electrical Tester	
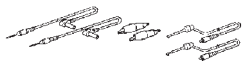	(09083-00150)	Test Lead Set	

EQUIPMENT

Intelligent vacuum pump	
Ohmmeter	
Service Wire Harness	
Torque wrench	
Vacuum gauge	

2GR-FE INTAKE

EQUIPMENT

Intelligent tester	
Ohmmeter	
Intelligent vacuum pump	

2GR-FE EXHAUST

EQUIPMENT

Torque wrench	Exhaust pipe assembly

2GR-FE COOLING

SST

	09213-70011	Crankshaft Pully Holding Tool	
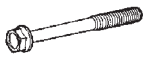	(09213-70020)	Bolt	
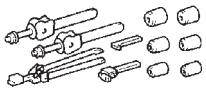	09230-01010	Radiator Service Tool Set	
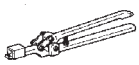	(09231-01010)	Overhaul Handle	
	(09231-01030)	Claw	
	09231-14010	Punch	
	09330-00021	Companion Flange Holding Tool	
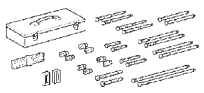	09950-50013	Puller C Set	
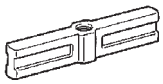	(09951-05010)	Hanger 150	
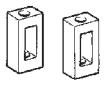	(09952-05010)	Slide Arm	
	(09953-05020)	Center Bolt 150	

PP

	(09954-05021)	Claw No.2	
	09960-10010	Variable Pin Wrench Set	
	(09962-01000)	Variable Pin Wrench Arm Assembly	
	(09963-00700)	Pin 7	

RECOMMENDED TOOLS

	09082-00050	TOYOTA Electrical Tester Set	

EQUIPMENT

Heater	
Radiator cap tester	
Thermometer	
Torque wrench	
Slide calipers	

COOLANT

Item	Capacity	Classification
Engine coolant (2GR-FE)	8.3 liters (8.8 US qts, 7.3 Imp. qts)	"Toyota Super Long Life Coolant", "Toyota Long Life Coolant" or equivalent

SSM

	08826-00080	Seal Packing Black or equivalent (FIPG)	

2GR-FE LUBRICATION

SST

	09228-06501	Oil Filter Wrench	
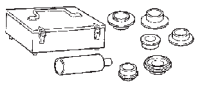	09316-60011	Transmission & Transfer Bearing Replacer	
	(09316-00011)	Replacer Pipe	

EQUIPMENT

Feeler gauge	
Precision straight edge	
Torque wrench	

SSM

	08826-00080	Seal Packing Black or equivalent (FIPG)	
	08826-00100	Seal Packing 1282B, THREE BOND 1282B or equivalent (FIPG)	

2GR-FE IGNITION

RECOMMENDED TOOLS

	09082-00040	TOYOTA Electrical Tester	
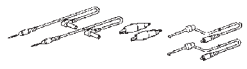	(09083-00150)	Test Lead Set	
	09200-00010	Engine Adjust Kit	
	(09857-00031)	Spark Plug Gap Gauge	

PP

EQUIPMENT

Spark plug cleaner	
Torque wrench	

2GR-FE STARTING

RECOMMENDED TOOLS

	09082-00040	TOYOTA Electrical Tester	
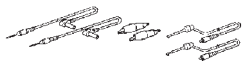	(09083-00150)	Test Lead Set	
	09904-00010	Expander Set	
	(09904-00050)	No. 4 Claw	

EQUIPMENT

Ammeter(A)	
Ohmmeter	
Service Wire Harness	
Dial indicator	
Sandpaper (#400)	
Torque wrench	
Vernier calipers	
V-block	
Press	

2GR-FE CHARGING

SST

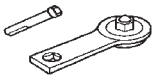	09820-63020	Alternator Pulley Wrench Set	
	09950-40011	Puller B Set	
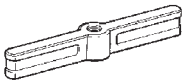	(09951-04020)	Hanger 200	
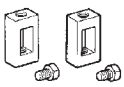	(09952-04010)	Slide Arm	
	(09953-04020)	Center Bolt 150	
	(09954-04010)	Arm 25	
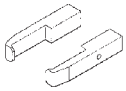	(09955-04071)	Claw No.7	
	(09957-04010)	Attachment	
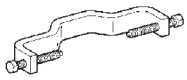	(09958-04011)	Holder	
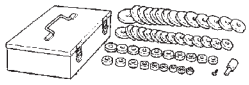	09950-60010	Replacer Set	
	(09951-00250)	Replacer 25	

	(09951-00470)	Replacer 47	
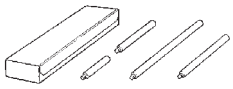	09950-70010	Handle Set	
	(09951-07100)	Handle 100	

RECOMMENDED TOOLS

	09082-00040	TOYOTA Electrical Tester	
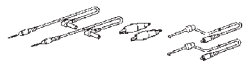	(09083-00150)	Test Lead Set	

EQUIPMENT

Ammeter(A)	
Ohmmeter	
Service Wire Harness	
Torque wrench	
Vernier calipers	
Press	

U151E AUTOMATIC TRANSAXLE

SST

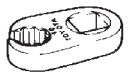	09023-12701	Union Nut Wrench 17mm	
	09215-00013	Crankshaft Bearing Remover & Replacer Set B	
	(09215-00471)	Camshaft Bearing Remover & Replacer	
	09223-15020	Oil Seal & Bearing Replacer	
	09223-15030	Oil Seal & Bearing Replacer	
	09308-00010	Oil Seal Puller	
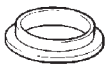	09316-12010	Transfer Bearing Replacer	
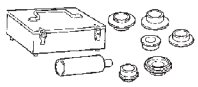	09316-60011	Transmission & Transfer Bearing Replacer	
	(09316-00011)	Replacer Pipe	
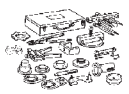	09350-32014	TOYOTA Automatic Transmission Tool Set	
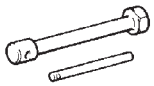	(09351-32010)	One-way Clutch Test Tool	

	(09351-32020)	Stator Stopper	
	(09351-32070)	No.2 Piston Spring Compressor	
	(09351-32140)	Oil Seal Replacer	
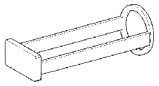	09387-00020	Direct Clutch Wrench	
	09387-00030	Counter Drive Gear Holding Tool	
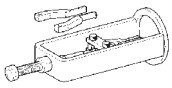	09387-00041	Bearing Puller Assembly	
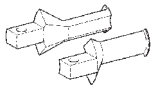	(09387-01010)	Claw No.1	
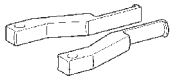	(09387-01021)	Claw No.2	
	(09387-01030)	Pin	
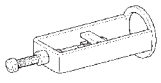	(09387-01040)	Bearing Puller Body	
	09387-00050	Under Drive Gear Puller	
	09387-00060	Second Brake Wrench	

PP

PP

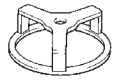	09387-00070	First & Reverse Brake Wrench	
	09387-00080	Counter Drive Gear Nut Wrench	
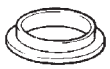	09502-12010	Differential Bearing Replacer	
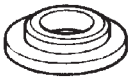	09506-35010	Differential Drive Pinion Rear Bearing Replacer	
	09514-35011	Rear Wheel Bearing Puller	
	09520-01010	Drive Shaft Remover Attachment	
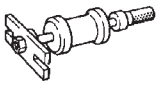	09520-24010	Differential Side Gear Shaft Puller	
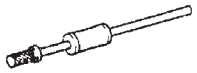	(09520-32040)	Shocker Set	
	09527-17011	Rear Axle Shaft Bearing Remover	
	09550-60010	Differential Side Bearing Replacer	
	(09951-00490)	Replacer 49	
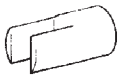	09564-32011	Differential Preload Adaptor	

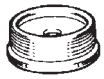	09608-10010	Steering Knuckle Oil Seal Replacer	
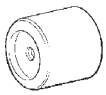	09649-17010	Steering Knuckle Tool	
	09710-30050	Suspension Arm Bushing Replacer	
	09726-40010	Lower Control Shaft Bearing Replacer	
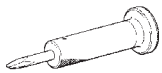	09930-00010	Drive Shaft Nut Chisel	
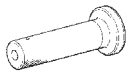	(09931-00010)	Handle	
	(09931-00020)	Nut Chisel	
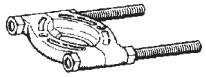	09950-00020	Bearing Remover	
	09950-00030	Bearing Remover Attachment	
	09950-40011	Puller B Set	
	(09957-04010)	Attachment	
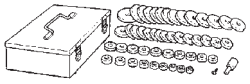	09950-60010	Replacer Set	

PP

PP

	(09951-00230)	Replacer 23	
	(09951-00260)	Replacer 26	
	(09951-00320)	Replacer 32	
	(09951-00450)	Replacer 45	
	(09951-00490)	Replacer 49	
	(09951-00500)	Replacer 50	
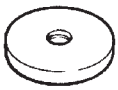	(09951-00590)	Replacer 59	
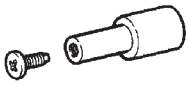	(09952-06010)	Adapter	
	(09957-04010)	Attachment	
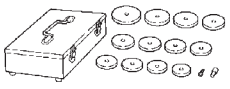	09950-60020	Replacer Set No.2	
	(09951-00750)	Replacer 75	
	(09951-00810)	Replacer 81	

	(09951-00890)	Replacer 89	
	(09951-00910)	Replacer 91	
	(09951-01030)	Replacer 103	
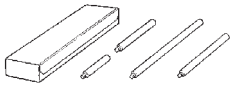	09950-70010	Handle Set	
	(09951-07100)	Handle 100	
	(09951-07150)	Handle 150	

PP

RECOMMENDED TOOLS

	09011-12301	Socket Wrench 30 mm	
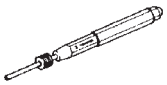	09031-00030	Pin Punch	
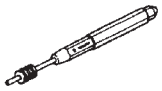	09031-00040	Pin Punch .	
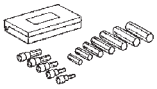	09040-00011	Hexagon Wrench Set	
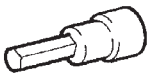	(09043-20050)	Socket Hexagon Wrench 5	
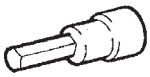	(09043-20060)	Socket Hexagon Wrench 6	
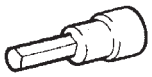	(09043-20100)	Socket Hexagon Wrench 10	
	09070-20010	Moulding Remover	
	09082-00040	TOYOTA Electrical Tester	
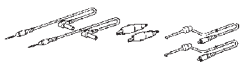	(09083-00150)	Test Lead Set	
	09090-04020	Engine Sling Device	

	09216-00021	Belt Tension Gauge	
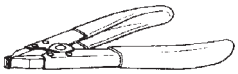	09905-00012	Snap Ring No.1 Expander	
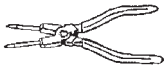	09905-00013	Snap Ring Pliers	

EQUIPMENT

Straight edge	
Torque wrench	
Vernier calipers	
Dial indicator with magnetic base	
Slide calipers	
Chain block	
Feeler gauge	
Plastic hammer	
Press	
Seal packing 2403, THREE BOND 2403 or equivalent	
Seal packing 2430, THREE BOND 2430 or equivalent	

LUBRICANT

Automatic transaxle fluid		
Dry fill Drain and refill	8.8 liter (9.3 US qts, 7.7 Imp. qts) 3.5 liter (3.7 US qts, 3.1 Imp. qts)	ATF WS

SSM

	08833-00070	Adhesive 1324, THREE BOND 1324 or equivalent	
	08833-00080	Adhesive 1344 THREE BOND 1344 LOCTITE 242 or equivalent	

DRIVE SHAFT

SST

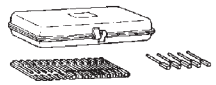	09240-00020	Wire Gauge Set	
	09520-01010	Drive Shaft Remover Attachment	
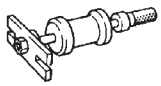	09520-24010	Differential Side Gear Shaft Puller	
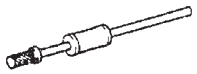	(09520-32040)	Shocker Set	
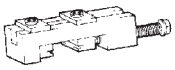	09521-24010	Rear Axle Shaft Puller	
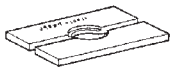	09527-10011	Rear Axle Shaft Bearing Remover	
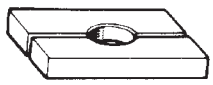	09527-30010	Rear Axle Shaft Bearing Remover	
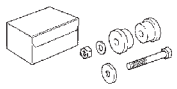	09608-16042	Front Hub Bearing Adjusting Tool	
	(09608-02021)	Bolt & Nut	
	(09608-02041)	Retainer	
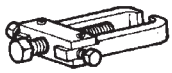	09628-62011	Boll Joint Puller	

	09726-40010	Lower Control Shaft Bearing Replacer	
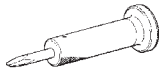	09930-00010	Drive Shaft Nut Chisel	
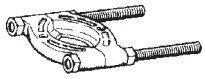	09950-00020	Bearing Remover	

RECOMMENDED TOOLS

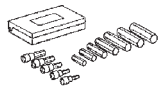	09040-00011	Hexagon Wrench Set	
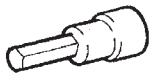	(09043-20060)	Socket Hexagon Wrench 6	
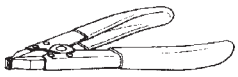	09905-00012	Snap Ring No.1 Expander	

EQUIPMENT

Torque wrench	
Alignment tester	
Toe-in gauge	
Angle gauge	

AXLE

SST

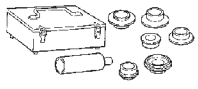	09316-60011	Transmission & Transfer Bearing Replacer	
	(09316-00011)	Replacer Pipe	
	(09316-00031)	Replacer B	
	09520-00031	Rear Axle Shaft Puller	
	09527-17011	Rear Axle Shaft Bearing Remover	
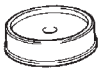	09608-32010	Steering Knuckle Oil Seal Replacer	
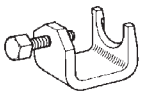	09628-10011	Ball Joint Puller	
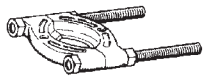	09950-00020	Bearing Remover	
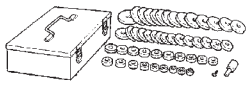	09950-60010	Replacer Set	
	(09951-00430)	Replacer 43	
	(09951-00600)	Replacer 60	

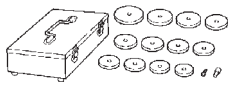	09950-60020	Replacer Set No.2	
	(09951-00810)	Replacer 81	
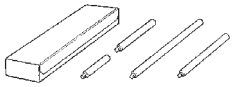	09950-70010	Handle Set	
	(09951-07100)	Handle 100	

RECOMMENDED TOOLS

	09011-12301	Socket Wrench 30 mm	
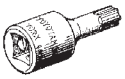	09042-00010	Torx Socket T30	
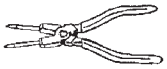	09905-00013	Snap Ring Pliers	

HINT:
Torx is a registered trademark of Textron Inc.

EQUIPMENT

Torque wrench	
Dial indicator with magnetic base	
Alignment tester	
Toe-in gauge	
Angle gauge	

SUSPENSION

SST

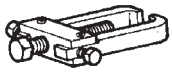	09628-62011	Boll Joint Puller	
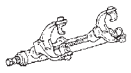	09727-30021	Coil Spring Compressor	
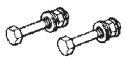	(09727-00010)	Bolt Set	
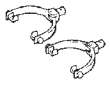	(09727-00021)	Arm Set	
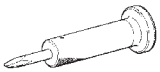	09930-00010	Drive Shaft Nut Chisel	

RECOMMENDED TOOLS

	09017-38120	Deep Socket Wrench 12 mm	
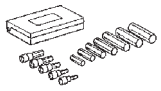	09040-00011	Hexagon Wrench Set	
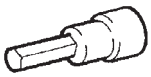	(09043-20050)	Socket Hexagon Wrench 5	
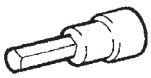	(09043-20060)	Socket Hexagon Wrench 6	

EQUIPMENT

Torque wrench	
Dial indicator with magnetic base	
Tire pressure gauge	
Alignment tester	
Toe-in gauge	
Angel gauge	
Camber-caster-kingpin gauge	
Drill	

TIRE AND WHEEL

EQUIPMENT

Tire pressure gauge	
Dial indicator with magnetic base	
Wheel balancer	

BRAKE CONTROL

SST

	09023-00101	Union Nut Wrench 10 mm	
	09520-00031	Rear Axle Shaft Puller	
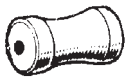	(09520-00040)	Shocker	
	09521-00020	Drive Shaft Boot Clamping Tool	
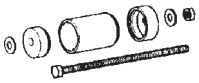	09830-36010	Front Mounting Cushion Remover & Replacer	
	09843-18040	Diagnosis Check Wire No.2	
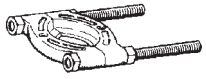	09950-00020	Bearing Remover	
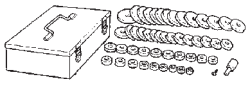	09950-60010	Replacer Set	
	(09951-00650)	Replacer 65	
	09950-70010	Handle Set	
	(09951-07100)	Handle 100	

RECOMMENDED TOOLS

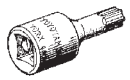	09042-00010	Torx Socket T30	
	09082-00040	TOYOTA Electrical Tester	
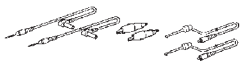	(09083-00150)	Test Lead Set	

HINT:
Torx is a registered trademark of Textron Inc.

EQUIPMENT

Alignment tester	
Toe-in gauge	
Slide Calipers	
Torque wrench	

BRAKE

SST

	09023-00101	Union Nut Wrench 10 mm	
	09737-00020	Brake Booster Push Rod Wrench	

EQUIPMENT

Feeler gauge	
Micrometer	
Torque wrench	
Dial indicator with magnetic base	

PARKING BRAKE

EQUIPMENT

Torque wrench	

STEERING COLUMN

SST

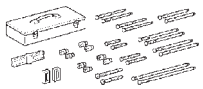	09950-50013	Puller C Set	
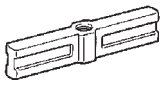	(09951-05010)	Hanger 150	
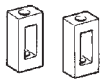	(09952-05010)	Slide Arm	
	(09953-05020)	Center Bolt 150	
	(09954-05021)	Claw No.2	

RECOMMENDED TOOLS

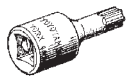	09042-00010	Torx Socket T30	

HINT:
Torx is a registered trademark of Textron Inc.

EQUIPMENT

Torque wrench	

POWER STEERING

SST

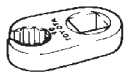	09023-12701	Union Nut Wrench 17mm	
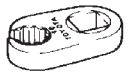	09023-38201	Union Nut Wrench 12mm	
	09521-24010	Rear Axle Shaft Puller	
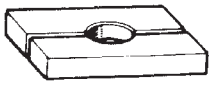	09527-21011	Rear Axle Shaft Bearing Remover	
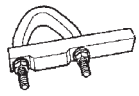	09612-00012	Rack & Pinion Steering Rack Housing Stand	
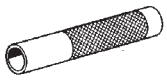	09612-22011	Tilt Handle Bearing Replacer	
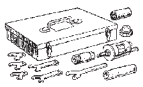	09612-24014	Steering Gear Housing Overhaul Tool Set	
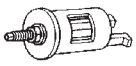	(09613-22011)	Steering Rack Shaft Bushing Puller	
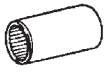	09616-00011	Steering Worm Bearing Adjusting Socket	
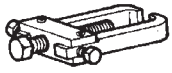	09628-62011	Boll Joint Puller	
	09630-00014	Power Steering Gear Housing Overhaul Tool Set	

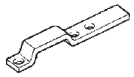	(09631-00132)	Vane Pump Bracket	
	09631-10021	Rack Stopper Wrench	
	09631-12071	Steering Rack Oil Seal Test Tool	
	09631-20081	Seal Ring Tool	
	09631-33010	Steering Rack Cover I	
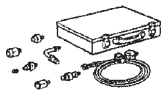	09640-10010	Power Steering Pressure Gauge Set	
	(09641-01010)	Gauge Assy	
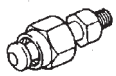	(09641-01020)	Attachment A	
	(09641-01030)	Attachment B	
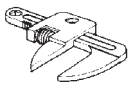	09922-10010	Variable Open Wrench	
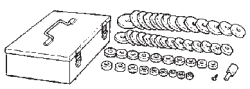	09950-60010	Replacer Set	
	(09951-00180)	Replacer 18	

PP

PP

	(09951-00250)	Replacer 25	
	(09951-00280)	Replacer 28	
	(09951-00290)	Replacer 29	
	(09951-00320)	Replacer 32	
	(09951-00340)	Replacer 34	
	(09951-00400)	Replacer 40	
	(09951-00420)	Replacer 42	
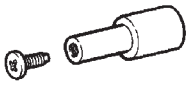	(09952-06010)	Adapter	
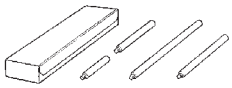	09950-70010	Handle Set	
	(09951-07100)	Handle 100	
	(09951-07150)	Handle 150	
	(09951-07360)	Handle 360	

RECOMMENDED TOOLS

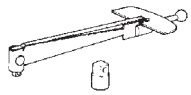	09025-00010	Torque Wrench (30 kgf-cm)	

EQUIPMENT

Vernier calipers	
Dial indicator	
Feeler gauge	
Micrometer	
Torque wrench	
Dial indicator with magnetic base	
Tire pressure gauge	
Alignment tester	
Toe-in gauge	
Angle gauge	

LUBRICANT

Item	Capacity	Classification
Power steering fluid (Total)	0.7 liters (0.7 US qts, 0.6 Imp.qts)	ATF DEXTRON II or III

SSM

	08833-00080	Adhesive 1344 THREE BOND 1344 LOCTITE 242 or equivalent	

AIR CONDITIONING

SST

	07110-58060	Air Conditioner Service Tool Set	
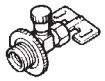	(07117-58060)	Refrigerant Drain Service Valve	
	(07117-58070)	T-Joint	
	(07117-58080)	Quick Disconnect Adapter	
	(07117-58090)	Quick Disconnect Adapter	
	(07117-78050)	Refrigerant Charging Gauge	
	(07117-88060)	Refrigerant Charging Hose	
	(07117-88070)	Refrigerant Charging Hose	
	(07117-88080)	Refrigerant Charging Hose	

RECOMMENDED TOOLS

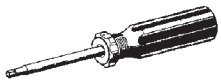	09041-00010	Torx Driver T20	
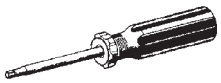	09041-00030	Torx Driver T30	
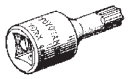	09042-00010	Torx Socket T30	
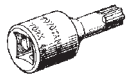	09042-00020	Torx Socket T40	
	09070-20010	Moulding Remover	
	09082-00040	TOYOTA Electrical Tester	
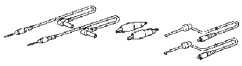	(09083-00150)	Test Lead Set	

HINT:
Torx is a registered trademark of Textron Inc.

EQUIPMENT

Oscilloscope	
Voltmeter	
Anmeter	
Ohmmeter	
Vinyl tape	
Hexagon wrench 4 mm	
Hexagon wrench 12 mm	
Gas leak detector	
Dial indicator with magnetic base	
Radiator cap tester	
Torque wrench	

LUBRICANT

Item	Capacity	Classification
Compressor oil	-	ND-OIL 8 or equivalent

SUPPLEMENTAL RESTRAINT SYSTEM

SST

PP

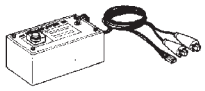	09082-00700	SRS Airbag Deployment Tool	
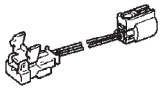	09082-00750	Airbag Deployment Wire Sub-harness No.3	
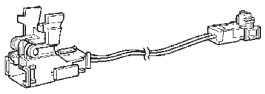	09082-00770	Airbag Deployment Wire Sub-harness No.5	
	09082-00780	Airbag Deployment Wire Sub-harness No.6	
	09082-00802	Airbag Deployment Wire Sub-Harness No. 8	
	(09082-10801)	Wire A	
	(09082-20801)	Wire B	
	(09082-30801)	Wire C	
	09843-18060	SRS Check Wire	

RECOMMENDED TOOLS

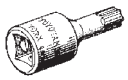	09042-00010	Torx Socket T30	

HINT:
Torx is a registered trademark of Textron Inc.

EQUIPMENT

Torque wrench	
Feeler gauge	
Bolt Length: 35.0 mm (1.378 in.) Pitch: 1.0 mm (0.039 in.) Diameter: 6.0 mm (0.236 in.)	Airbag disposal
Tire Width: 185 mm (7.28 in.) Inner diameter: 360 mm (14.17 in.)	Airbag disposal
Tire with disc wheel Width: 185 mm (7.28 in.) Inner diameter: 360 mm (14.17 in.)	Airbag disposal
Plastic bag	Airbag disposal

SEAT BELT

SST

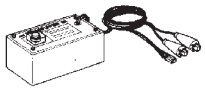	09082-00700	SRS Airbag Deployment Tool	
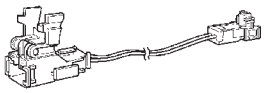	09082-00770	Airbag Deployment Wire Sub-harness No.5	

RECOMMENDED TOOLS

	09070-20010	Moulding Remover	

EQUIPMENT

Torque wrench	
Protective tape	To avoid surface damage

THEFT DETERRENT SYSTEM

RECOMMENDED TOOLS

	09082-00040	TOYOTA Electrical Tester	
	09082-00050	TOYOTA Electrical Tester Set	

ENGINE IMMOBILISER

RECOMMENDED TOOLS

	09082-00040	TOYOTA Electrical Tester	
	09082-00050	TOYOTA Electrical Tester Set	

CRUISE CONTROL

SST

	09870-60000	LAZER RADAR ADJUSTING REFLECTOR	
	(09870-60010)	BASE STAND	
	(09870-60020)	REFLECTOR A	

RECOMMENDED TOOLS

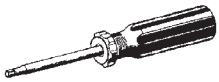	09041-00030	Torx Driver T30	
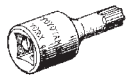	09042-00010	Torx Socket T30	

HINT:
Torx is a registered trademark of Textron Inc.

EQUIPMENT

Torque wrench	

LIGHTING

RECOMMENDED TOOLS

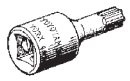	09042-00010	Torx Socket T30	
	09070-20010	Moulding Remover	
	09082-00040	TOYOTA Electrical Tester	
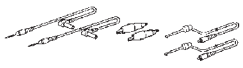	(09083-00150)	Test Lead Set	

HINT:
Torx is a registered trademark of Textron Inc.

EQUIPMENT

Torque wrench	

WIPER AND WASHER

SST

	09843-18040	Diagnosis Check Wire No.2	

RECOMMENDED TOOLS

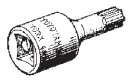	09042-00010	Torx Socket T30	

HINT:
Torx is a registered trademark of Textron Inc.

EQUIPMENT

Torque wrench	

DOOR LOCK

RECOMMENDED TOOLS

	09082-00040	TOYOTA Electrical Tester	
	09082-00050	TOYOTA Electrical Tester Set	

METER

RECOMMENDED TOOLS

	09070-20010	Moulding Remover	
	09082-00040	TOYOTA Electrical Tester	
	(09083-00150)	Test Lead Set	

EQUIPMENT

Torque wrench	
Adhesive Tape	

AUDIO / VISUAL

RECOMMENDED TOOLS

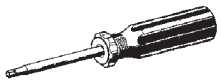	09041-00010	Torx Driver T20	
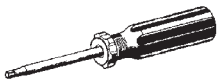	09041-00030	Torx Driver T30	
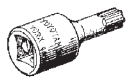	09042-00010	Torx Socket T30	
	09070-20010	Moulding Remover	
	09082-00040	TOYOTA Electrical Tester	
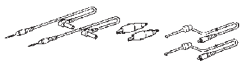	(09083-00150)	Test Lead Set	

HINT:
Torx is a registered trademark of Textron Inc.

EQUIPMENT

Torque wrench	

NAVIGATION

RECOMMENDED TOOLS

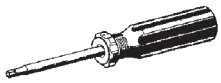	09041-00010	Torx Driver T20	
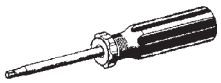	09041-00030	Torx Driver T30	
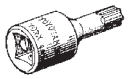	09042-00010	Torx Socket T30	
	09070-20010	Moulding Remover	
	09082-00040	TOYOTA Electrical Tester	
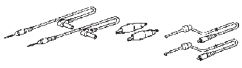	(09083-00150)	Test Lead Set	

HINT:
Torx is a registered trademark of Textron Inc.

EQUIPMENT

Torque wrench	

HORN

EQUIPMENT

Torque wrench	

OTHER SYSTEM

EQUIPMENT

Torque wrench	

WINDSHIELD / WINDOWGLASS

RECOMMENDED TOOLS

PP

	09070-20010	Moulding Remover	
	09082-00040	TOYOTA Electrical Tester	
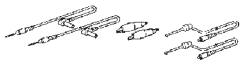	(09083-00150)	Test Lead Set	

EQUIPMENT

Knife	
Piano wire	Windshield
Plastic sheet	To avoid surface damage
Sealer gun	
Torque wrench	
Tape	To avoid surface damage
Wooden block or similar object	For tying piano wire ends

SSM

	08850-00801	Windshield Glass Adhesive Set or equivalent	

INSTRUMENT PANEL

RECOMMENDED TOOLS

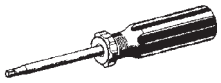	09041-00030	Torx Driver T30	
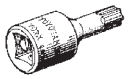	09042-00010	Torx Socket T30	
	09070-20010	Moulding Remover	

HINT:
Torx is a registered trademark of Textron Inc.

EQUIPMENT

Torque wrench	
Adhesive Tape	

SEAT

RECOMMENDED TOOLS

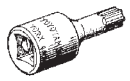	09042-00010	Torx Socket T30	
	09042-00030	Torx Socket T20	
	09082-00040	TOYOTA Electrical Tester	
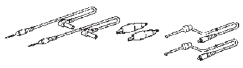	(09083-00150)	Test Lead Set	
	09200-00010	Engine Adjust Kit	
	(09203-00010)	Thickness Gauge	

HINT:
Torx is a registered trademark of Textron Inc.

EQUIPMENT

Hog ring pliers	
Hog ring	
Torque wrench	
Tape	To avoid surface damage

ENGINE HOOD / DOOR

SST

	09812-00010	Door Hinge Set Bolt Wrench	

RECOMMENDED TOOLS

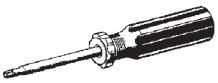	09041-00020	Torx Driver T25	
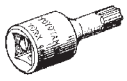	09042-00010	Torx Socket T30	
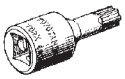	09042-00020	Torx Socket T40	

HINT:
Torx is a registered trademark of Textron Inc.

EQUIPMENT

Clip remover	
Tape	To avoid surface damage
Torque wrench	

LUBRICANT

Item	Capacity	Classification
MP grease	-	-

SSM

	08833-00070	Adhesive 1324, THREE BOND 1324 or equivalent	

EXTERIOR

RECOMMENDED TOOLS

	09070-20010	Moulding Remover	

EQUIPMENT

Clip remover	
Heat light	Moulding
Protective tape	To avoid surface damage.
Torque wrench	

INTERIOR

RECOMMENDED TOOLS

	09070-20010	Moulding Remover	

EQUIPMENT

Clip remover	
Torque wrench	

SLIDING ROOF

RECOMMENDED TOOLS

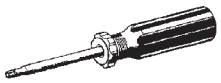	09041-00020	Torx Driver T25	

PP

HINT:
Torx is a registered trademark of Textron Inc.

EQUIPMENT

Torque wrench	

LUBRICANT

Item	Capacity	Classification
MP grease	-	-

MULTIPLEX COMMUNICATION

RECOMMENDED TOOLS

	09082-00040	TOYOTA Electrical Tester	
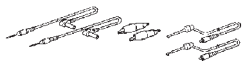	(09083-00150)	Test Lead Set	

CAN COMMUNICATION

RECOMMENDED TOOLS

	09082-00040	TOYOTA Electrical Tester	
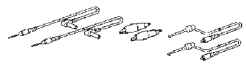	(09083-00150)	Test Lead Set	

FRONT POWER SEAT CONTROL SYSTEM (w/ Memory)

PRECAUTION

1. PRECAUTION OF DISCONNECTING BATTERY TERMINAL

NOTICE:

When disconnecting the negative (-) battery terminal, initialize the following system(s) after the terminal is reconnected.

System Name	See procedure
Power Window Control System	IN-29
Sliding Roof System	

2. EXPRESSIONS OF IGNITION SWITCH

The type of ignition switch used on this model differs according to the specifications of the vehicle.

The expressions listed in the table below are used in this section.

Switch Type		Ignition Switch (position)	Engine Switch (condition)
Expression	Ignition Switch off	LOCK	Off
	Ignition Switch on (IG)	ON	On (IG)
	Ignition Switch on (ACC)	ACC	On (ACC)
	Engine Start	START	Start

SE

PARTS LOCATION

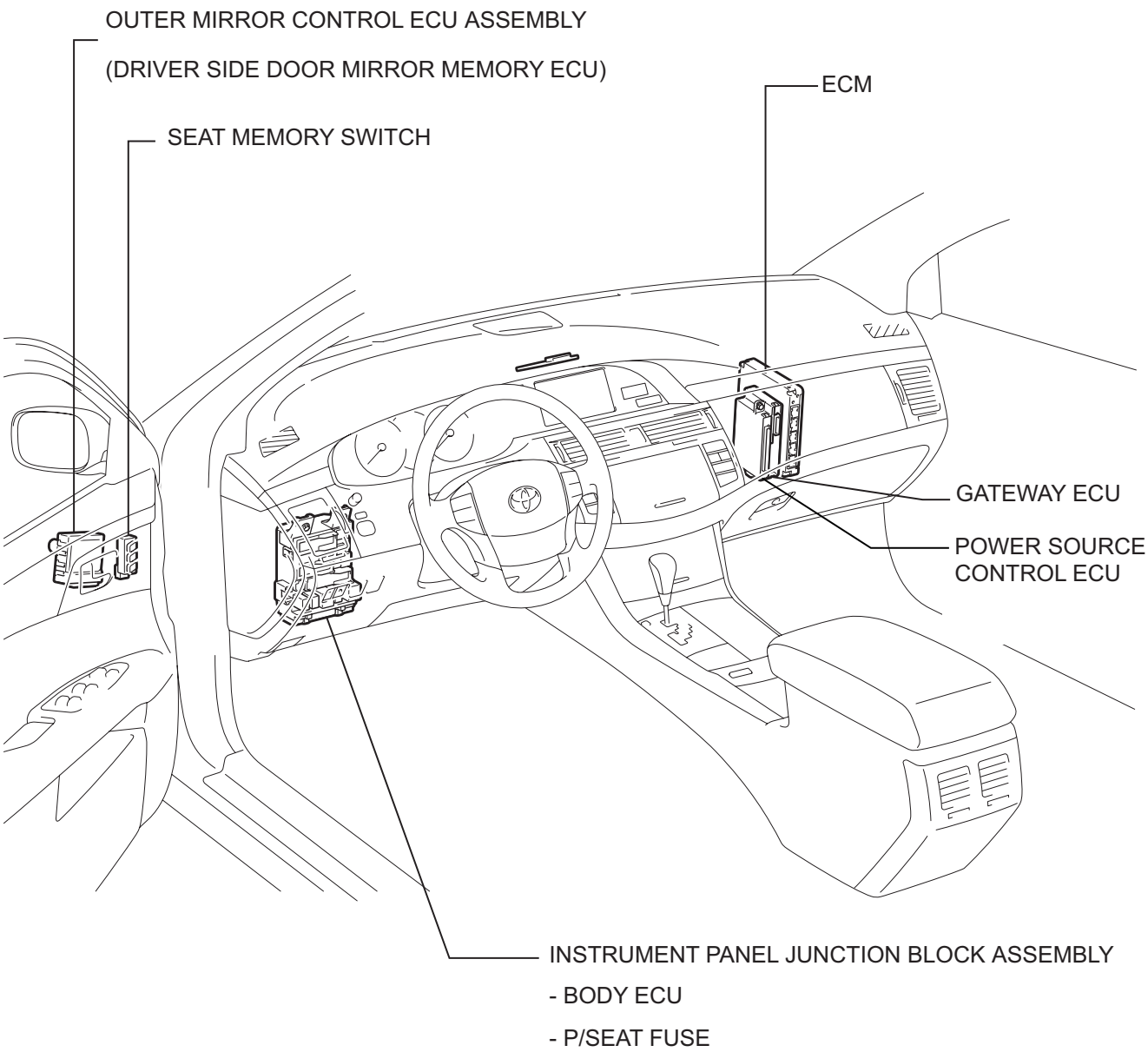

P

B115019E02

SE

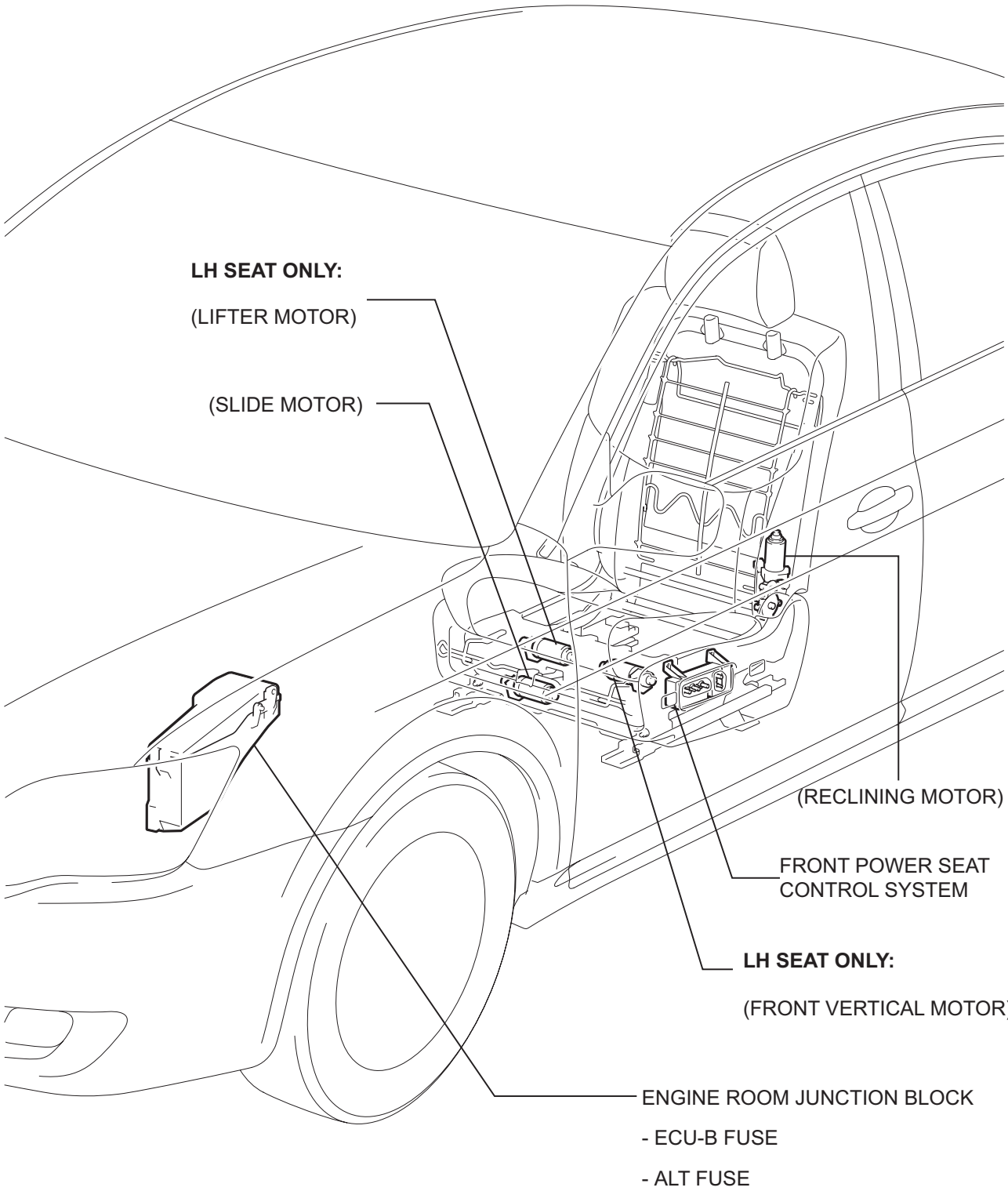

SE

P

B115020E01

SYSTEM DIAGRAM

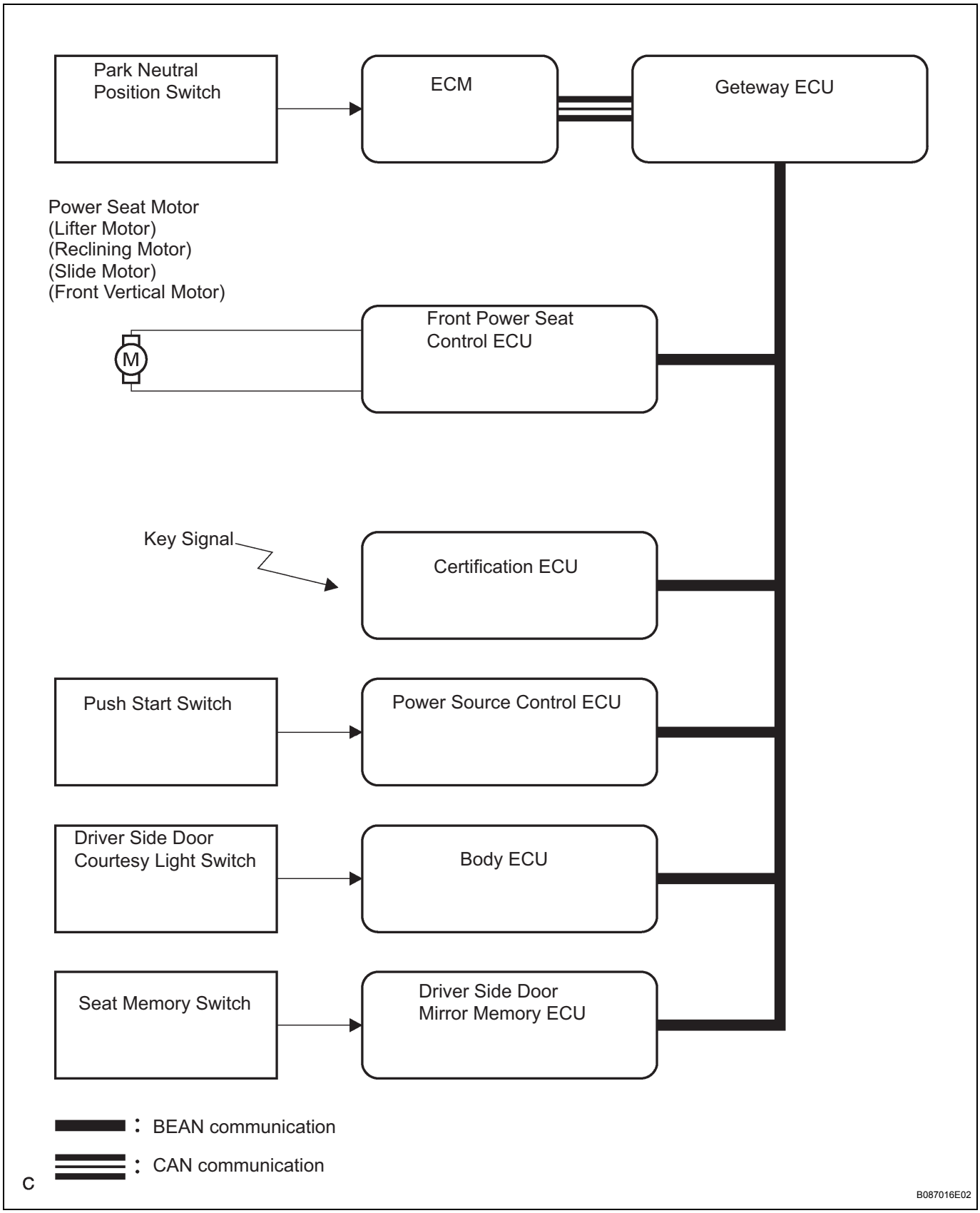

SE

1. SIGNAL COMMUNICATION TABLE

Transmitting ECU (Transmitter)	Receiving ECU	Signals	Communication method
ECM	Power seat control ECU	• Shift position P signal	CAN - BEAN
Certification ECU	Power seat control ECU	• Smart memory call replay request signal • Registration key ID code signal (when wireless control is operated)	BEAN
Front power source control ECU	Power seat control ECU	• Key code recognition signal	BEAN
Body ECU	Power seat control ECU	• Ignition switch on (IG) signal • Ignition switch on (ACC) signal • Key detection signal • Driver side door courtesy light switch signal • Front passenger side door courtesy light switch signal • Smart door unlock signal • Wireless door unlock signal • Key ID signal	BEAN
Driver side door mirror memory ECU	Power seat control ECU	• Seat memory switch signal	BEAN

SYSTEM DESCRIPTION

1. GENERAL DESCRIPTION

The power seat control system (w/ memory) controls the following functions:

- Manual operation of the front seat.
- Individual seat positions for two different drivers can be stored for the slide-reclining front-vertical 8-way lifter.
- Similarly, power mirror positions for two different drivers can be stored. These are stored/restored together with the seat positions by pushing the seat memory switch (driver side seat only).
- The above operations are performed using the multiplex communication system.
- As a safety precaution, the system disallows seat position restoration unless the ignition switch is on (IG) and the shift lever position is in P.
- Manual adjustment of the lumbar support function and leg cushion adjustment can be performed even when the position control ECU & switch assembly (front power seat switch) is not functional.

When the power seat control switch is operated, a command signal is sent to the position control ECU & switch assembly (front power seat switch). The position control ECU & switch assembly (front power seat switch) then activates the appropriate seat motor as needed. This memory system does not use a seat position sensor. The seat position is detected by counting pulses that are output when the motor turns. If there is no pulse output from the motor, the motor will stop operating. The position control ECU & switch assembly (front power seat switch) is designed so that a malfunction of the seat memory system will not interfere with manual seat control. The seat memory switch also sends signals to the position control ECU & switch assembly (front power seat switch) to memorize a given seat position. Two seat positions can be memorized. The seat memory switch is later used to send signals to the position control ECU & switch assembly (front power seat switch) to return the seat to one of the memorized positions.

2. MEMORY CALL FUNCTION

(a) This function uses the key ID to move the seat automatically into the position previously set for the key ID when the driver side door is opened or the ignition switch is turned on (ACC or IG) after the doors are unlocked.

3. FUNCTION OF MAIN COMPONENT

The following functions are available.

Components	Function
Seat slide motor	Slides the driver side seatback and forth based on signals from the position control ECU & switch assembly (front power seat switch).
Seat reclining motor	Relines the driver side seatback and forth based on signals from the position control ECU & switch assembly (front power seat switch).

Components	Function
Seat front vertical motor	Moves the front part of the driver side seat up and down based on signals from the position control ECU & switch assembly (front power seat switch).
Seat lifter motor	Moves the driver side sear up and down based on signals from the position control ECU & switch assembly (front power seat switch), motor operates, and driver side's seat rear vertical raises and lowers.
Seat switch Memory switch	When the set and memory switches are pressed simultaneously, a SET, 1 or 2 switch signal is input to the outer mirror control ECU assembly and sends the seat memory switch signal via the multiplex communication system. When only the memory switch is pressed, a SET, 1 or 2 switch signal is input to the outer mirror control ECU assembly and driver side seat position changes according to memory.

4. SYSTEM OPERATION

The front power seat adjustment and position memory are shown in the chart below.

Seat Adjustment Function	Driver	Front Passenger
Slide	Power and memory	Power
Reclining	Power and memory	Power
Front Vertical Height	Power and memory	-
Rear Vertical	Power and memory	-
Lumbar Support	Power	-
Leg Cushion Adjuster	Power	-

In the memory function, the memory switch operation is initially transferred from the outer mirror control ECU assembly to the position control ECU & switch assembly (front power seat switch) via the multiplex communication line. Then, either the seat position is stored in memory or a previously stored seat position is recalled to seat the appropriate seat position.

HOW TO PROCEED WITH TROUBLESHOOTING

HINT:

- Use this procedure to troubleshoot the front power seat control system with the memory function.
- The intelligent tester should be used in steps 3 and 5.

1	VEHICLE BROUGHT TO WORKSHOP

NEXT

2	CUSTOMER PROBLEM ANALYSIS CHECK AND PROBLEM SYMPTOM CHECK

NEXT

3	CHECK COMMUNICATION FUNCTION OF MULTIPLEX COMMUNICATION SYSTEM (BEAN)

(a) Use the intelligent tester to check for normal function of the multiplex communication system.
  (1) (ECU not connected, communication line malfunctioning) If no code is output, proceed to A.
  (2) (ECU not connected, communication line malfunctioning) If any code is output, proceed to B.

B → Go to MULTIPLEX COMMUNICATION SYSTEM

A

SE

4	PROBLEM SYMPTOMS TABLE

(a) If the fault is not listed on the problem symptoms table, proceed to A.
(b) If the fault is listed on the problem symptoms table, proceed to B.

B → Go to step 6

A

5	OVERALL ANALYSIS AND TROUBLESHOOTING

(a) DATA LIST/ACTIVE TEST (See page SE-10).
  (1) Inspection with the intelligent tester (DATA LIST).
  (2) Inspection with the intelligent tester (ACTIVE TEST).
(b) Terminals of ECU (See page SE-9).
(c) On vehicle inspection (See page SE-13).

NEXT

6	**ADJUST, REPAIR OR REPLACE**

NEXT

7	**CONFIRMATION TEST**

NEXT

END

PROBLEM SYMPTOMS TABLE

HINT:
Inspect the fuse and relay before confirming the suspected areas in the table below.
Inspect each suspected area in numerical order for the corresponding symptom.
If the malfunction still exists after checking and confirming that all circuits and components are normal, replace the ECU.

FRONT POWER SEAT CONTROL SYSTEM (W/ MEMORY)

Symptom	Suspected area	See page
Power seat does not operate (manual or memorized positions).	1. ECU power source circuit	SE-22
	2. Position control ECU & switch assembly (front power seat switch)	SE-51
One of the power seat functions does not operate (manual or memorized positions).	1. Power seat motor circuit	SE-16
	2. Position control ECU & switch assembly (front power seat switch)	SE-51
One or all manual seat functions do not operate (memorized positions OK).	Position control ECU & switch assembly (front power seat switch)	SE-51
Memory function does not operate.	1. Memory switch circuit	SE-19
	2. Multiplex communication system	MP-10
	3. Position control ECU & switch assembly (front power seat switch)	SE-51
No memory functions operate or all memory functions operate briefly and then stop (manual functions OK).	1. ECU power source circuit	SE-22
	2. Position control ECU & switch assembly (front power seat switch)	SE-51
One memory function does not operate or operates briefly and then stops (manual functions OK).	1. Power seat motor assembly	SE-16
	2. Position control ECU & switch assembly (front power seat switch)	SE-51

TERMINALS OF ECU

1. POSITION CONTROL ECU & SWITCH ASSEMBLY (POWER SEAT CONTROL ECU)

Connector Front View:

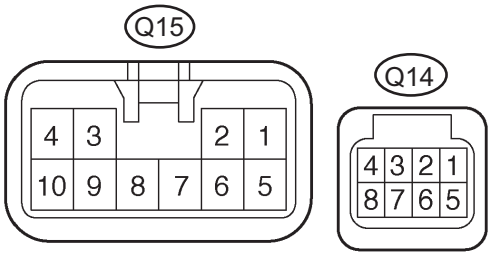

Y

B066387E04

(a) Disconnect the Q14 and Q15 connectors.
(b) Check the voltage of each terminal of the wire harness side connectors.

Voltage

Symbols (Terminal No.)	Wiring Color	Terminal Description	Condition	Specified Condition
IG (Q14-4) - Q15-1 (GND)	Y - W-B	Ignition switch	Ignition switch off → on (IG)	Below 1 V → 10 to 14 V
SYSB (Q14-8) - Q15-1 (GND)	GR - W-B	Power source	Always	10 to 14 V
+B (Q15-5) - Q15-1 (GND)	LG - W-B	Battery	Always	10 to 14 V

If the result is not as specified, there may be a malfunction on the wire harness side.

(c) Check the resistance of each terminal of the wire harness side connectors.

Resistance

Symbols (Terminal No.)	Wiring Color	Terminal Description	Condition	Specified Condition
GND (Q15-1) - Body ground	W-B - Body Ground	Ground	Always	Below 1 Ω

If the result is not as specified, there may be a malfunction on the wire harness side.

(d) Reconnect the Q14 and Q15 ECU connectors.
(e) Check the voltage of each terminal of the connectors.

Voltage

Symbols (Terminal No.)	Wiring Color	Terminal Description	Condition	Specified Condition
MPX1 (Q14-1) - GND (Q15-1)	O - W-B	Multiplex communication signal circuit	Ignition switch on (IG)	Pulse generation
SLD+ (Q15-2) - GND (Q15-1)	L - W-B	Sliding motor signal (Forward)	Seat moving forward using sliding switch → Other conditions	10 to 14 V → Below 1 V
SLD- (Q15-3) - GND (Q15-1)	Y - W-B	Sliding motor signal (Rearward)	Seat moving rearward using sliding switch → Other conditions	10 to 14 V → Below 1 V
FRV- (Q15-4) - GND (Q15-1)	B - W-B	Front vertical motor signal (Downward)	Seat cushion front portion lowering using front vertical switch → Other conditions	10 to 14 V → Below 1 V

SE

Symbols (Terminal No.)	Wiring Color	Terminal Description	Condition	Specified Condition
FRV+ (Q15-6) - GND (Q15-1)	G - W-B	Front vertical motor signal (Upward)	Seat cushion front portion rising using front vertical switch → Other conditions	10 to 14 V → Below 1 V
LFT+ (Q15-7) - GND (Q15-1)	W - W-B	Lifter motor signal (Upward)	Seat rising using lifter switch → Other conditions	10 to 14 V → Below 1 V
RCL+ (Q15-8) - GND (Q15-1)	P - W-B	Reclining motor signal (Forward)	Seatback moving forward using reclining switch → Other conditions	10 to 14 V → Below 1 V
LFT- (Q15-9) - GND (Q15-1)	V - W-B	Lifter motor signal (Downward)	Seat lowering using lifter switch → Other conditions	10 to 14 V → Below 1 V
RCL- (Q15-10) - GND (Q15-1)	BR - W-B	Reclining motor signal (Rearward)	Seatback moving rearward using reclining switch → Other conditions	10 to 14 V → Below 1 V

If the result is not as specified, the front power seat switch may be malfunctioning.

DATA LIST / ACTIVE TEST

1. DATA LIST

HINT:

Using the intelligent tester's DATA LIST allows the status of a switch, sensor, actuator and other items to be read without removing any parts. Reading the DATA LIST early in troubleshooting is one way to save time.

(a) Connect the intelligent tester (with CAN VIM) to the DLC3.

(b) Turn the ignition switch on (IG).

(c) Read the DATA LIST.

D_SEAT (Power Seat ECU):

Item	Measurement Item/Range (Display)	Normal Condition	Diagnostic Note
RECLIN SW REAR	Reclining switch signal (Rearward)/ ON or OFF	ON: Reclining switch (Rearward) is ON OFF: Reclining switch (Rearward) is OFF	-
RECLIN SW FRONT	Reclining switch signal (Forward)/ ON or OFF	ON: Reclining switch (Forward) is ON OFF: Reclining switch (Forward) is OFF	-
F VTCL SW DOWN	Front vertical switch signal (Downward)/ ON or OFF	ON: Front vertical switch (Downward) is ON OFF: Front vertical switch (Downward) is OFF	-
F VTCL SW UP	Front vertical switch signal (Upward)/ ON or OFF	ON: Front vertical switch (Upward) is ON OFF: Front vertical switch (Upward) is OFF	-
LIFTER SW DOWN	Lifter switch signal (Downward)/ ON or OFF	ON: Lifter switch (Downward) is ON OFF: Lifter switch (Downward) is OFF	-
LIFTER SW UP	Lifter switch signal (Upward)/ ON or OFF	ON: Lifter switch (Upward) is ON OFF: Lifter switch (Upward) is OFF	-
SLIDE SW REAR	Sliding switch signal (Rearward)/ ON or OFF	ON: Sliding switch (Rearward) is ON OFF: Sliding switch (Rearward) is OFF	-
SLIDE SW FRONT	Sliding switch signal (Forward)/ ON or OFF	ON: Sliding switch (Forward) is ON OFF: Sliding switch (Forward) is OFF	-
POWER VOLTAGE	Power supply for driver seat ECU & switch/ MIN: 0 V, MAX: 19.89 V	Within range from 11 to 14 V	-
IG SW	Ignition switch status (IG)/ ON or OFF	ON: Ignition switch is ON OFF: Ignition switch is OFF	-
KEY UNLOCK SW	Key detection signal/ ON or OFF	ON: Key is in the vicinity of the driver's seat OFF: Key is not in the vicinity of the driver's side	-
DOOR WARN SW	Door courtesy switch signal/ ON or OFF	ON: Driver side door is open OFF: Driver side door is closed	-
PNP SW	Shift lever position P signal/ ON or OFF	ON: Shift lever in P position OFF: Shift lever in any position except P	-

Item	Measurement Item/Range (Display)	Normal Condition	Diagnostic Note
KEY CODE CONF	Recognition code is registered/ ON or OFF	ON: One or more recognition codes are registrated OFF: No recognition code is registered	-
ACC SW	Ignition switch status (ACC)/ ON or OFF	ON: Ignition switch is ACC OFF: Ignition switch is OFF	-
M2 SW	Seat memory switch M2 signal/ ON or OFF	ON: Seat memory switch M2 is ON OFF: Seat memory switch M2 is OFF	-
M1 SW	Seat memory switch M1 signal/ ON or OFF	ON: Seat memory switch M1 is ON OFF: Seat memory switch M1 is OFF	-
SET SW	Seat memory set switch signal/ ON or OFF	ON: Memory set switch is ON OFF: Memory set switch is OFF	-
SLIDE POS	Seat sliding position/ MIN: -4096, MAX: 4096	Within range from -4096 to 4096	-
RECLIN POS	Seatback position/ MIN: -4096, MAX: 4096	Within range from -4096 to 4096	-
F VTCL POS	Seat front vertical position/ MIN: -4096, MAX: 4096	Within range from -4096 to 4096	-
LIFTER POS	Seat lifter position/ MIN: -4096, MAX: 4096	Within range from -4096 to 4096	-
MEM M1 SW	Driving position memorized with seat memory switch M1/ MEM or NOT MEM	MEM: Memorized NOT MEM: Not memorized	-
MEM M2 SW	Driving position memorized with seat memory switch M2/ MEM or NOT MEM	MEM: Memorized NOT MEM: Not memorized	-
SEAT MEM M1	Seat position memorized with seat memory switch M1/ MEM or NOT MEM	MEM: Memorized NOT MEM: Not memorized	-
SEAT MEM M2	Seat position memorized with seat memory switch M2/ MEM or NOT MEM	MEM: Memorized NOT MEM: Not memorized	-
SLIDE MEM POS 1	Seat sliding position memorized with seat memory switch M1/ MIN: -4096, MAX: 4096	Within range from -4096 to 4096	-
RECLN MEM POS 1	Seatback position memorized with seat memory switch M1/ MIN: -4096, MAX: 4096	Within range from -4096 to 4096	-
F VTCL MEM POS 1	Front vertical position memorized with seat memory switch M1/ MIN: -4096, MAX: 4096	Within range from -4096 to 4096	-
LIFTER MEM POS 1	Lifter position memorized with seat memory switch M1/ MIN: -4096, MAX: 4096	Within range from -4096 to 4096	-
SLIDE MEM POS 2	Seat sliding position memorized with seat memory switch M2/ MIN: -4096, MAX: 4096	Within range from -4096 to 4096	-
RECLN MEM POS 2	Seatback position memorized with seat memory switch M2/ MIN: -4096, MAX: 4096	Within range from -4096 to 4096	-
F VTCL MEM POS 2	Front vertical position memorized with seat memory switch M2/ MIN: -4096, MAX: 4096	Within range from -4096 to 4096	-
LIFTER MEM POS 2	Lifter position memorized with seat memory switch M2/ MIN: -4096, MAX: 4096	Within range from -4096 to 4096	-

2. ACTIVE TEST

HINT:

Using the intelligent tester's ACTIVE TEST allows the relay, VSV, actuator, and other items to be operated without removing any parts. Reading the ACTIVE TEST early in troubleshooting is one way to save time.

The DATA LIST can be displayed during the ACTIVE TEST.

(a) Connect the intelligent tester (with CAN VIM) to the DLC3.

(b) Turn the ignition switch on (IG).

(c) Perform the ACTIVE TEST by following the directions on the tester screen.

D_SEAT (Power Seat ECU):

Item	Test Details	Diagnostic Note
RECLINING	Test detail: reclining operation FRONT/REAR Vehicle condition: stopped	-
F VERTICAL	Test detail: front vertical operation UP/DOWN Vehicle condition: stopped	-
LIFTER	Test detail: lifter operation UP/DOWN Vehicle condition: stopped	-
SLIDE	Test detail: sliding operation UP/DOWN Vehicle condition: stopped	-

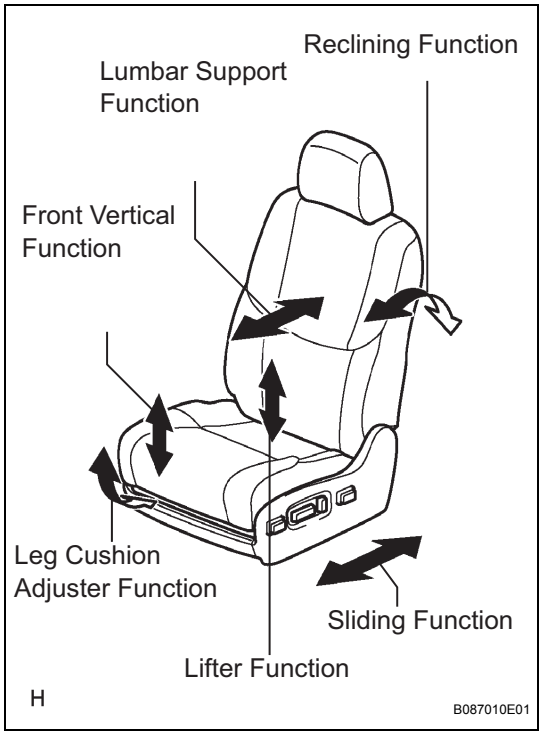

ON-VEHICLE INSPECTION

1. CHECK POWER SEAT MOTOR

(a) Check the basic functions.

(1) Operate the power seat switches and check that the following seat functions work:

- Sliding
- Front vertical (Driver side seat only)
- Lifter (Driver side seat only)
- Reclining
- Lumbar support (Driver side seat only)
- Leg cushion adjuster (Driver side seat only)

SE

2. CHECK FRONT SEAT ADJUSTER

(a) Check PTC operation inside the power seat motor.

HINT:

The PTC thermistor's resistance increases when the power seat switch is held down even after the power seat has been moved to the furthest possible position in one direction. When the resistance increases, the current is shut off to prevent a short circuit.

NOTICE:

Perform procedure "A" to "D" to check the full range of motion for each power seat function.

(1) Choose a power seat function. Operate the power seat switch and move the seat to the furthest possible position in one direction. Keep the seat in that position for approximately 60 seconds (Procedure "A").

(2) Operate the power seat switch again and continue to try to move the seat in the same direction as in procedure "A". Measure the time until the electrical current is shut off (motor operation sound will stop) (Procedure "B").
Standard:
4 to 90 seconds
(3) Turn the power seat switch off after the current is shut off, and maintain that condition for approximately 60 seconds (Procedure "C").
(4) Operate the same switch again and move the seat to the position opposite to the direction in procedure "A". Check that the motor operates (Procedure "D").
(5) Repeat procedure "A" to "D" for the remaining power seat functions.

3. CHECK LUMBAR SUPPORT ADJUSTER ASSEMBLY LH

(a) Inspect PTC operation inside the power seat motor.
NOTICE:
This inspection should be performed with the seat installed in the vehicle.
(1) Move the lumbar support to either the foremost or rearmost position by operating the lumbar support switch, and hold it there for approx. 60 seconds.
(2) Try to move the lumbar support past the furthest possible position using the switch and measure the time until the electrical current is shut off (motor operation sound will stop).
Standard:
4 to 90 seconds
(3) Turn the lumbar support switch off after the current is shut off, and maintain that condition for approx. 60 seconds.
(4) Operate the lumbar support switch to move the lumbar support to the opposite position and check that the motor operates.

4. CHECK FRONT SEAT ADJUSTER

(a) Inspect PTC operation inside the power seat motor.
NOTICE:
The inspection should be performed with the seat installed in the vehicle.
(1) Move the leg cushion to either the foremost or rearmost position by operating the leg cushion switch, and hold it there for approx. 60 seconds.
(2) Try to move the leg cushion past the furthest possible position using the switch and measure the time until the electrical current is shut off (motor operation sound will stop).
Standard:
4 to 90 seconds

SE

(3) Turn the leg cushion switch off after the current is shut off, and maintain that condition for approx. 60 seconds.
(4) Operate the leg cushion switch to move the leg cushion to the opposite position and check that the motor operates.

Seat Memory Switch

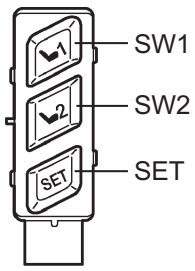

H B087011E01

5. CHECK SEAT MEMORY SWITCH

(a) Turn the ignition switch on (IG) and move the shift lever into the P position.
(b) Move the seat into the foremost and uppermost positions using each seat switch.
(c) Check that the buzzer sounds for 0.5 seconds and the seat position is recorded when the SW1 switch is pressed while the SET switch is held down.
(d) Move the seat from the foremost and uppermost positions using each seat switch.
(e) Check that the buzzer sounds for 0.5 seconds and the seat position is recorded when the SW2 switch is pressed while the SET switch is held down.
(f) Check that the buzzer sounds for 0.1 seconds and the seat automatically moves into the foremost and uppermost positions (set positions) when the SW1 switch is pressed.
(g) Check that the buzzer sounds for 0.1 seconds and the seat automatically moves out of the foremost and uppermost positions (set positions) when the SW2 switch is pressed.
(h) With the driver side door open and the key in the vicinity of the driver's seat within 30 seconds after the ignition switch is turned off, check that the seat automatically moves into the set position when the SW1 or SW2 switch is pressed.
(i) Move the seat into both maximum positions of the slide movement, and disconnect the negative terminal cable of the battery while the memory switch is pressed. Then leave the seat in that position for 3 minutes. The seat position memory will be erased.
(j) Move the seat into all the maximum positions (front/rear and up/down) using each seat switch.
(k) After the SW1 and SW2 switches are pressed together while the SET switch is held down check that the seat does not move (the seat position is not recorded) when the SW1 or SW2 switches is pressed.

Power Seat Motor Circuit

DESCRIPTION

When the power seat control switch is operated, a command signal is sent to the position control ECU & switch assembly (front power seat switch). The front power seat switch then controls the appropriate seat motor as needed. This memory system does not use a seat position sensor. The seat position is detected by counting pulses that are output when the motor turns. If there is no pulse output from the motor, the motor will stop operating. The front power seat switch is designed so that any malfunction of the seat memory system will not interfere with manual seat control.
If the position control ECU & switch assembly (front power seat switch) detects a low motor speed, abnormal activity, or sudden motor current fluctuation the system will stop the motor. If the motor operates continuously for 120 seconds or more, the system will stop the motor until the switch is turned on again.

WIRING DIAGRAM

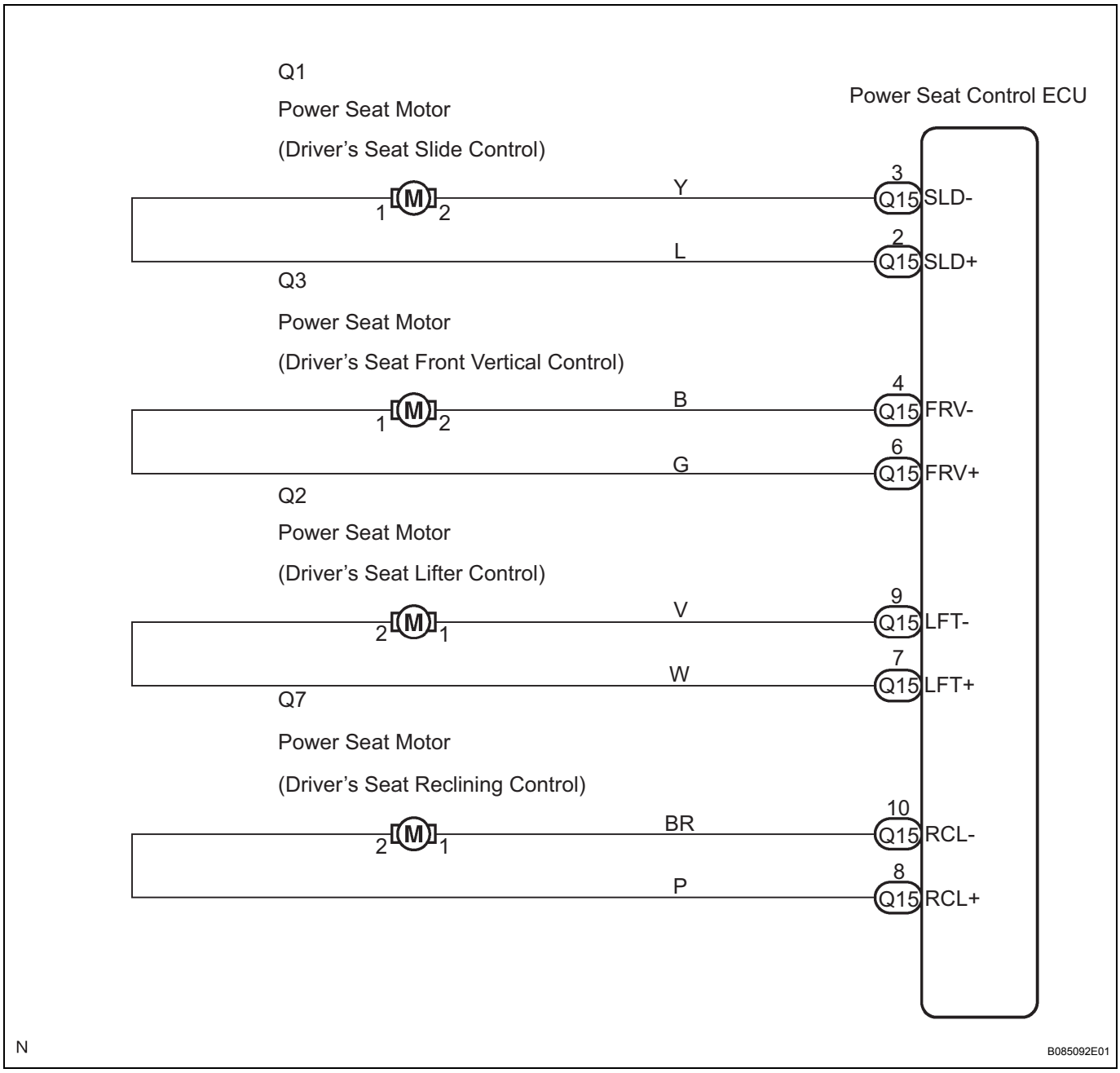

SE

INSPECTION PROCEDURE

1	PERFORM ACTIVE TEST BY INTELLIGENT TESTER

(a) Connect the intelligent tester (with CAN VIM) to the DLC3.
(b) Turn the ignition switch on (IG).
(c) Perform the ACTIVE TEST by following the directions on the tester screen.

D_SEAT (Power Seat ECU):

Item	Test Details	Diagnostic Note
RECLINING	Test detail: reclining operation FRONT/REAR Vehicle condition: stopped	-
F VERTICAL	Test detail: front vertical operation UP/DOWN Vehicle condition: stopped	-
LIFTER	Test detail: lifter operation UP/DOWN Vehicle condition: stopped	-
SLIDE	Test detail: sliding operation UP/DOWN Vehicle condition: stopped	-

OK:
The each power seat motors are moved.

NG → **Go to step 2**

OK

PROCEED TO NEXT CIRCUIT INSPECTION SHOWN IN PROBLEM SYMPTOMS TABLE

2	INSPECT POWER SEAT MOTOR ASSEMBLY

(a) Inspect the power seat motor (See page SE-82).

NG → **REPLACE POWER SEAT MOTOR ASSEMBLY**

OK

SE

3	CHECK HARNESS AND CONNECTOR (FRONT POWER SEAT SWITCH - POWER SEAT MOTOR ASSEMBLY)

Front Power Seat Switch Connector Wire Harness Rear View:

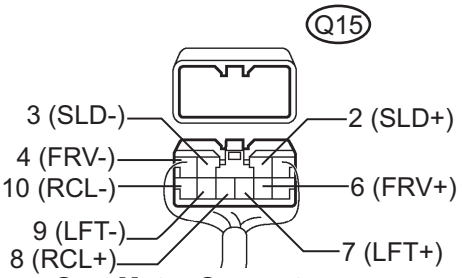

Power Seat Motor Connector Wire Harness Front View:

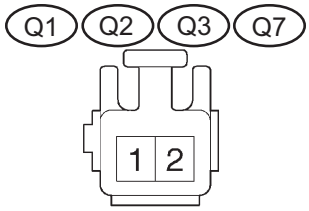

B086973E03

(a) Disconnect the power seat motor connectors and front power seat switch connector.

(b) Measure the resistance according to the value(s) in the table below.

Resistance

Tester Connection	Specified Condition
Q15-3 (SLD-) - Q1-2	Below 1 Ω
Q15-2 (SLD+) - Q1-1	Below 1 Ω
Q15-4 (FRV-) - Q3-2	Below 1 Ω
Q15-6 (FRV+) - Q3-1	Below 1 Ω
Q15-9 (LFT-) - Q2-1	Below 1 Ω
Q15-7 (LFT+) - Q2-2	Below 1 Ω
Q15-10 (RCL-) - Q7-1	Below 1 Ω
Q15-8 (RCL+) - Q7-2	Below 1 Ω
Q15-2 (SLD+) - Body ground	10 kΩ or higher
Q15-3 (SLD-) - Body ground	10 kΩ or higher
Q15-4 (FRV-) - Body ground	10 kΩ or higher
Q15-6 (FRV+) - Body ground	10 kΩ or higher
Q15-7 (LFT+) - Body ground	10 kΩ or higher
Q15-8 (RCL+) - Body ground	10 kΩ or higher
Q15-9 (LFT-) - Body ground	10 kΩ or higher
Q15-10 (RCL-) - Body ground	10 kΩ or higher

NG → **REPAIR OR REPLACE HARNESS OR CONNECTOR**

OK

SE

PROCEED TO NEXT CIRCUIT INSPECTION SHOWN IN PROBLEM SYMPTOMS TABLE

Driving Position Memory Switch Circuit (w/ Memory)

DESCRIPTION

The seat memory switch sends signals to the outer mirror control ECU assembly via the multiplex communication system to memorize a given seat position. This memory system does not use a position sensor. The seat position is detected by counting pulses that are output when the motor turns. If there is no pulse output from the motor, the motor will stop operating. The seat memory switch is later used to send signals to the front power seat switch to return the seat to one of the memorized positions.
The power seat memory operation can be performed only when the ignition switch is on (IG) and the shift lever position is in P.

WIRING DIAGRAM

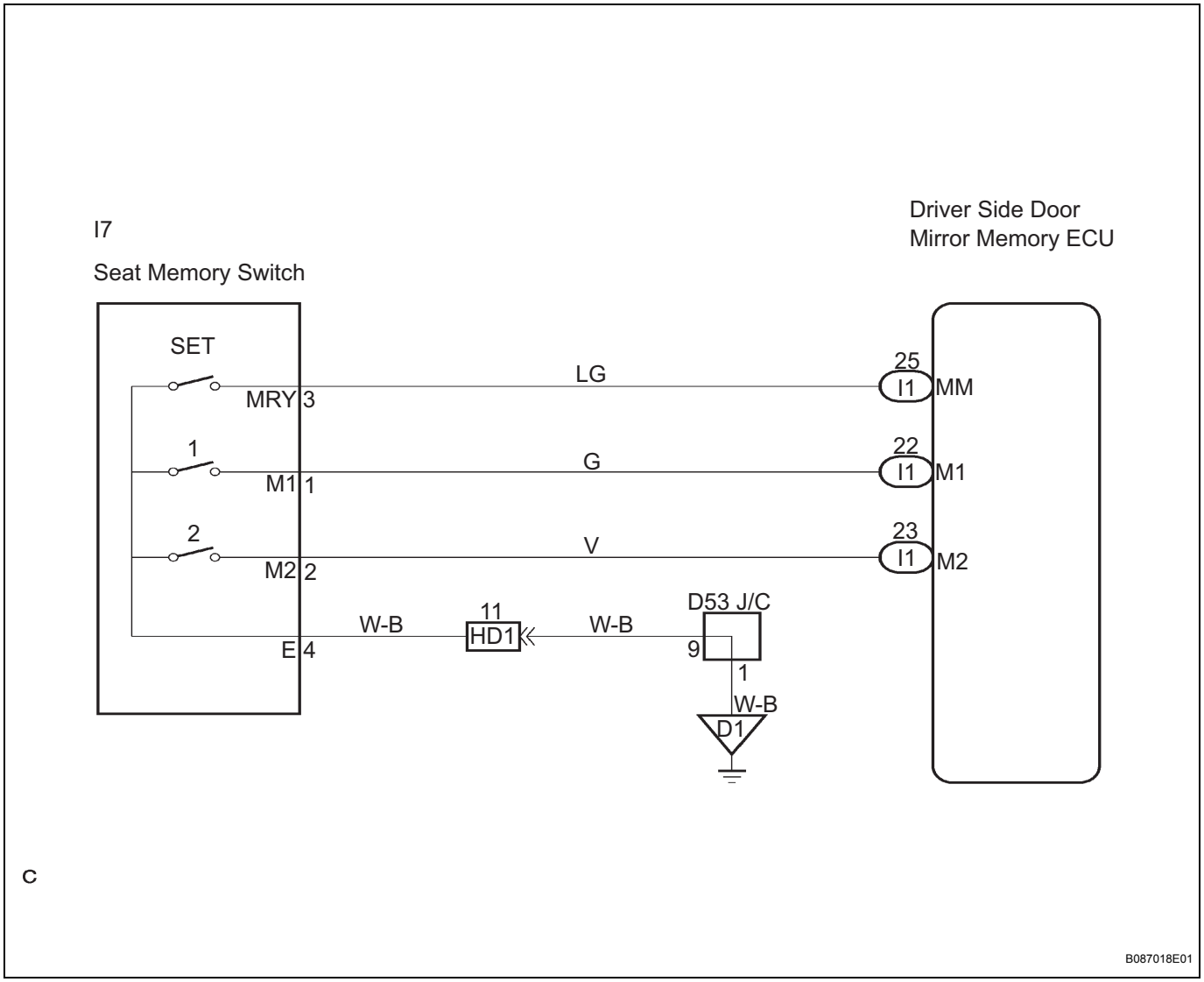

INSPECTION PROCEDURE

1	**READ VALUE OF INTELLIGENT TESTER**

(a) Connect the intelligent tester (with CAN VIM) to the DLC3.

SE

(b) Turn the ignition switch on (IG).
(c) Read the DATA LIST.

D_SEAT (Power Seat ECU):

Item	Measurement Item/Range (Display)	Normal Condition	Diagnostic Note
M2 SW	Seat memory switch M2 signal/ ON or OFF	ON: Seat memory switch M2 is ON OFF: Seat memory switch M2 is OFF	-
M1 SW	Seat memory switch M1 signal/ ON or OFF	ON: Seat memory switch M1 is ON OFF: Seat memory switch M1 is OFF	-
SET SW	Seat memory set switch signal/ ON or OFF	ON: Memory set switch is ON OFF: Memory set switch is OFF	-

OK:
Condition status can be displayed.

NG → **Go to step 2**

OK

PROCEED TO NEXT CIRCUIT INSPECTION SHOWN IN PROBLEM SYMPTOMS TABLE

2 INSPECT SEAT MEMORY SWITCH

Seat Memory Switch

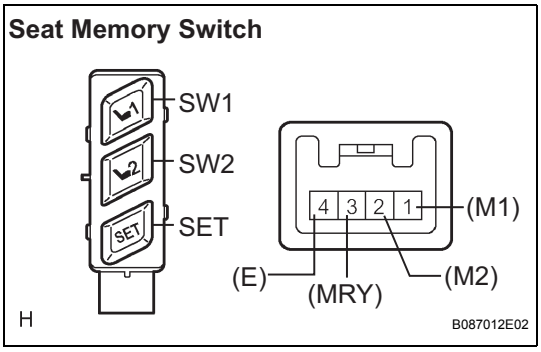

(a) Remove the seat memory switch.
(b) Measure the resistance according to the value(s) in the table below.
Resistance

Tester Connection	Condition	Specified Condition
1 (M1) - 4 (E)	SW1 switch pushed	Below 1 Ω
2 (M2) - 4 (E)	SW2 switch pushed	Below 1 Ω
3 (MRY) - 4 (E)	SET switch pushed	Below 1 Ω

NG → **REPLACE SEAT MEMORY SWITCH**

OK

3 CHECK HARNESS AND CONNECTOR (SEAT MEMORY SWITCH CIRCUIT)

Wire Harness Rear View:

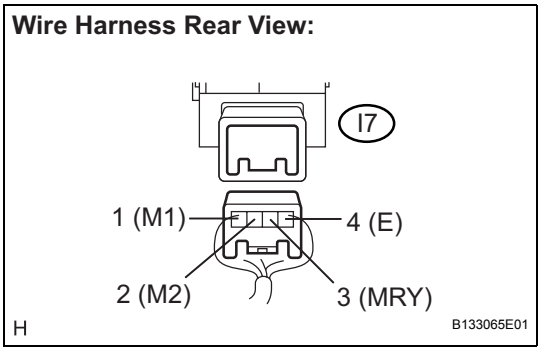

(a) Measure the voltage according to the value(s) in the table below.
Voltage

Tester Connection	Condition	Specified Condition
I7-1 (M1) - I7-4 (E)	Ignition switch on (IG)	10 to 14 V
I7-2 (M2) - I7-4 (E)	Ignition switch on (IG)	10 to 14 V
I7-3 (MRY) - I7-4 (E)	Ignition switch on (IG)	10 to 14 V

NG → **Go to step 4**

SE

OK

PROCEED TO NEXT CIRCUIT INSPECTION SHOWN IN PROBLEM SYMPTOMS TABLE

4	CHECK HARNESS AND CONNECTOR (OUTER MIRROR CONTROL ECU ASSEMBLY - SEAT MEMORY SWITCH)

Outer Mirror Control ECU Assembly Wire Harness Rear View:

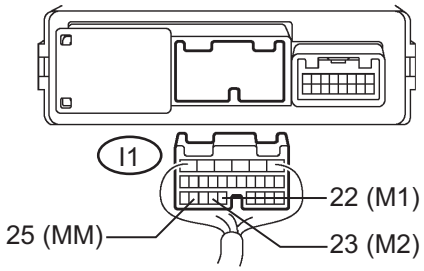

Seat Memory Switch Wire Harness Rear View:

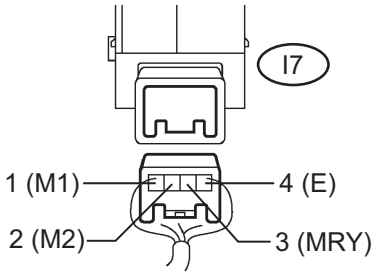

H

B087019E02

(a) Disconnect the I1 connector from the door ECU.
(b) Measure the resistance according to the value(s) in the table below.

Resistance

Tester Connection	Condition	Specified Condition
I7-1 (M1) - I1-22 (M1)	Always	Below 1 Ω
I7-2 (M2) - I1-23 (M2)	Always	Below 1 Ω
I7-3 (MRY) - I1-25 (MM)	Always	Below 1 Ω
I7-4 (E) - Body ground	Always	Below 1 Ω
I7-1 (M1) - Body ground	Always	10 kΩ or higher
I7-2 (M2) - Body ground	Always	10 kΩ or higher
I7-3 (MRY) - Body ground	Always	10 kΩ or higher

NG → **REPAIR OR REPLACE HARNESS OR CONNECTOR**

OK

REPLACE OUTER MIRROR CONTROL ECU ASSEMBLY

SE

ECU Power Source Circuit

DESCRIPTION

The position control ECU & switch assembly (front power seat switch) is contained in the switch assembly. During manual operation, only one switch signal is accepted. If signals are input from 2 or more switches simultaneously, all of them are ignored, except when signals are input from the front vertical switch and lifter switch simultaneously. In this case, the signal from the lifter will operate.

During automatic operation, a manual switch input will override any other operations, i.e. automatic operations will stop and the manual input operation only will be accepted. For example, if a manual switch input is activated during a seat store/restore operation, the previous operation will cease and manual operation will be performed. After the manual operation is performed, the previous automatic operation will not resume.

The power mirror store/restore operation is unaffected by manual switch inputs.

The front power seat switch disallows the restore operation of the power seat when the system detects that the voltage of terminal SYSB is less than 8.0 +- 0.5 V for 30 ms. or is more than 10 +- 0.5 V for 30 ms.

This circuit is the power source circuit for the front power seat switch.

HINT:

Manual adjustment of the slide, reclining, or lumbar can be performed even when the front power seat switch is not functional if current is allowed to flow into terminals +B and SYSB.

Lumbar support operation can be performed at all times.

WIRING DIAGRAM

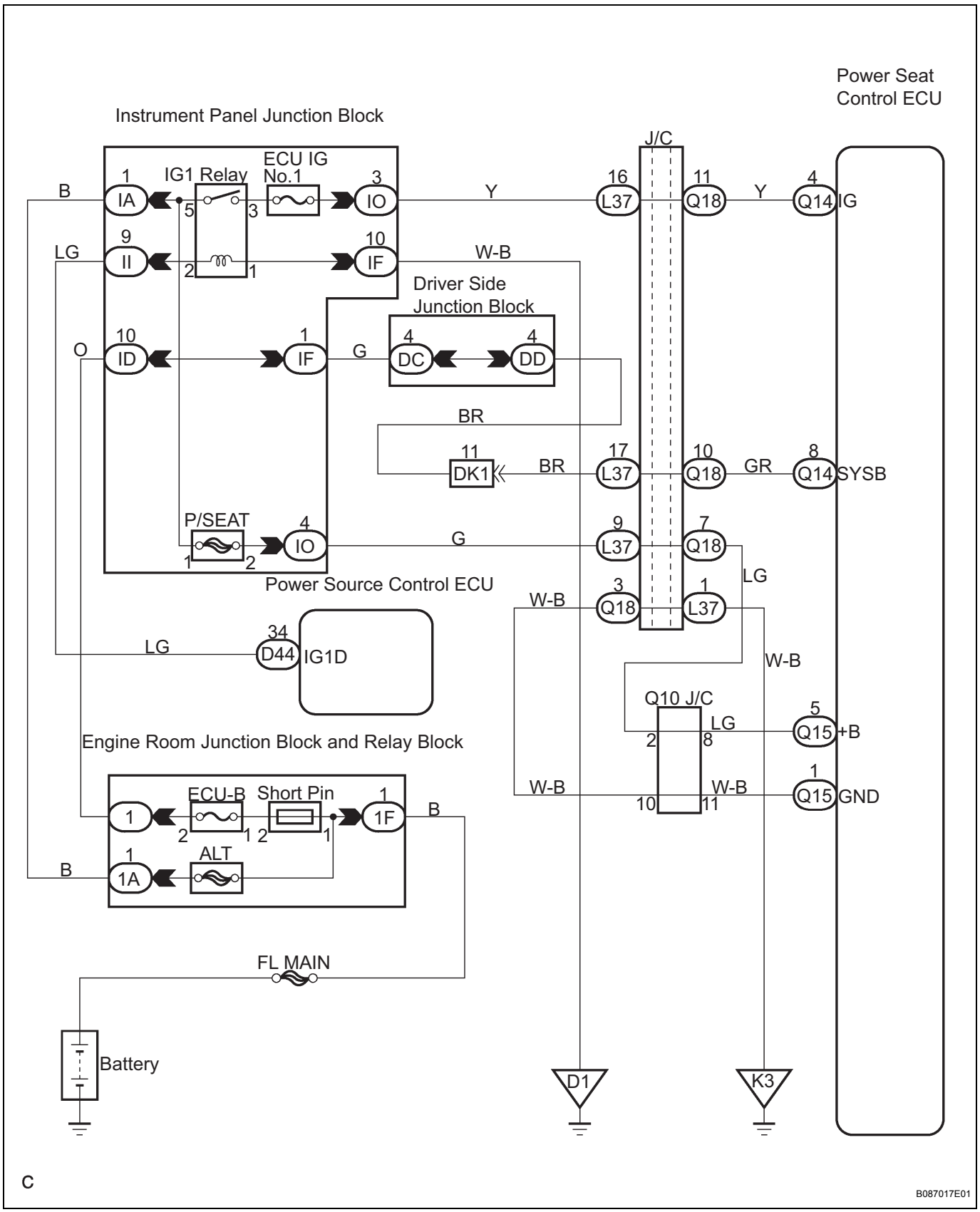

SE

INSPECTION PROCEDURE

1	INSPECT POSITION CONTROL ECU AND WIRING ASSEMBLY (FRONT POWER SEAT SWITCH POWER SOURCE CIRCUIT)

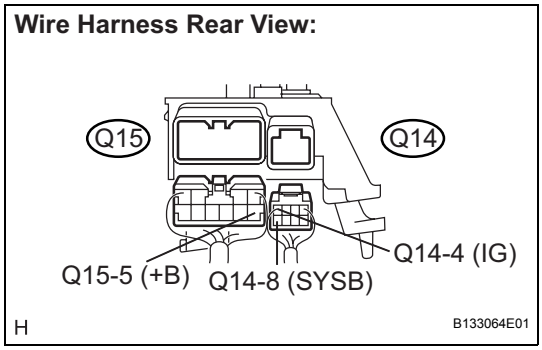

(a) Disconnect the front power seat switch connectors.
(b) Measure the voltage according to the value(s) in the table below.

Voltage

Tester Connection	Condition	Specified Condition
Q15-5 (+B) - Body ground	Always	10 to 14 V
Q14-4 (IG) - Body ground	Ignition switch on (IG)	10 to 14 V
Q14-8 (SYSB) - Body ground	Always	10 to 14 V

NG → REPAIR OR REPLACE HARNESS OR CONNECTOR (POWER SOURCE CIRCUIT)

OK

2	INSPECT POSITION CONTROL ECU AND WIRING ASSEMBLY (FRONT POWER SEAT SWITCH GROUND CIRCUIT)

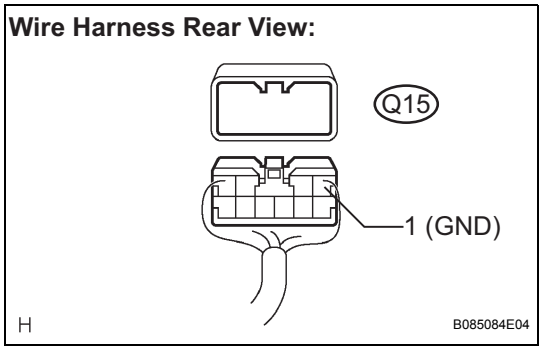

(a) Measure the resistance according to the value(s) in the table below.

Resistance

Tester Connection	Condition	Specified Condition
Q15-1 (GND) - Body ground	Always	Below 1 Ω

NG → REPAIR OR REPLACE HARNESS OR CONNECTOR (GROUND CIRCUIT)

OK

PROCEED TO NEXT CIRCUIT INSPECTION SHOWN IN PROBLEM SYMPTOMS TABLE

SE

FRONT POWER SEAT CONTROL SYSTEM (w/o Memory)

PRECAUTION

1. GENERAL PRECAUTION

(a) While using the battery during inspection, do not allow the positive and negative tester probes to come too close to each other as a short circuit may occur.

2. EXPRESSIONS OF IGNITION SWITCH

The type of ignition switch used on this model differs according to the specifications of the vehicle.
The expressions listed in the table below are used in this section.

Switch Type		Ignition Switch (position)	Engine Switch (condition)
Expression	Ignition Switch off	LOCK	Off
	Ignition Switch on (IG)	ON	On (IG)
	Ignition Switch on (ACC)	ACC	On (ACC)
	Engine Start	START	Start

PARTS LOCATION

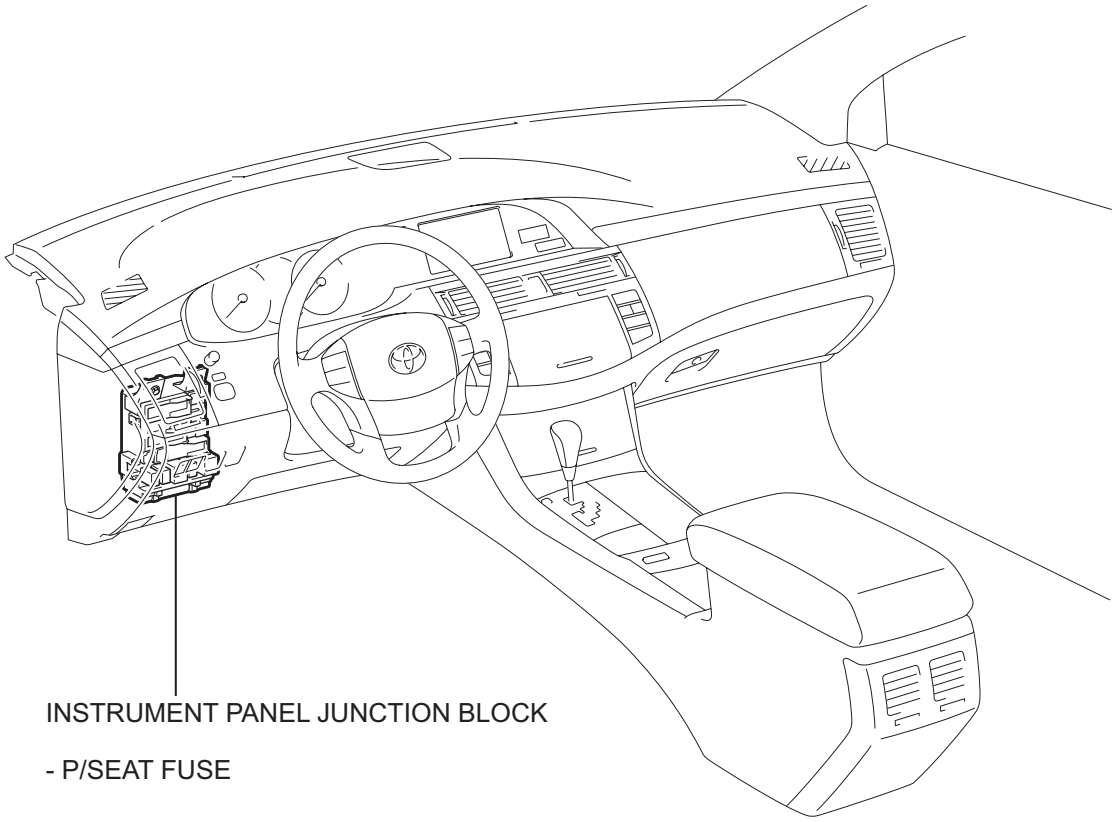

INSTRUMENT PANEL JUNCTION BLOCK

- P/SEAT FUSE

SE

P

B115022E01

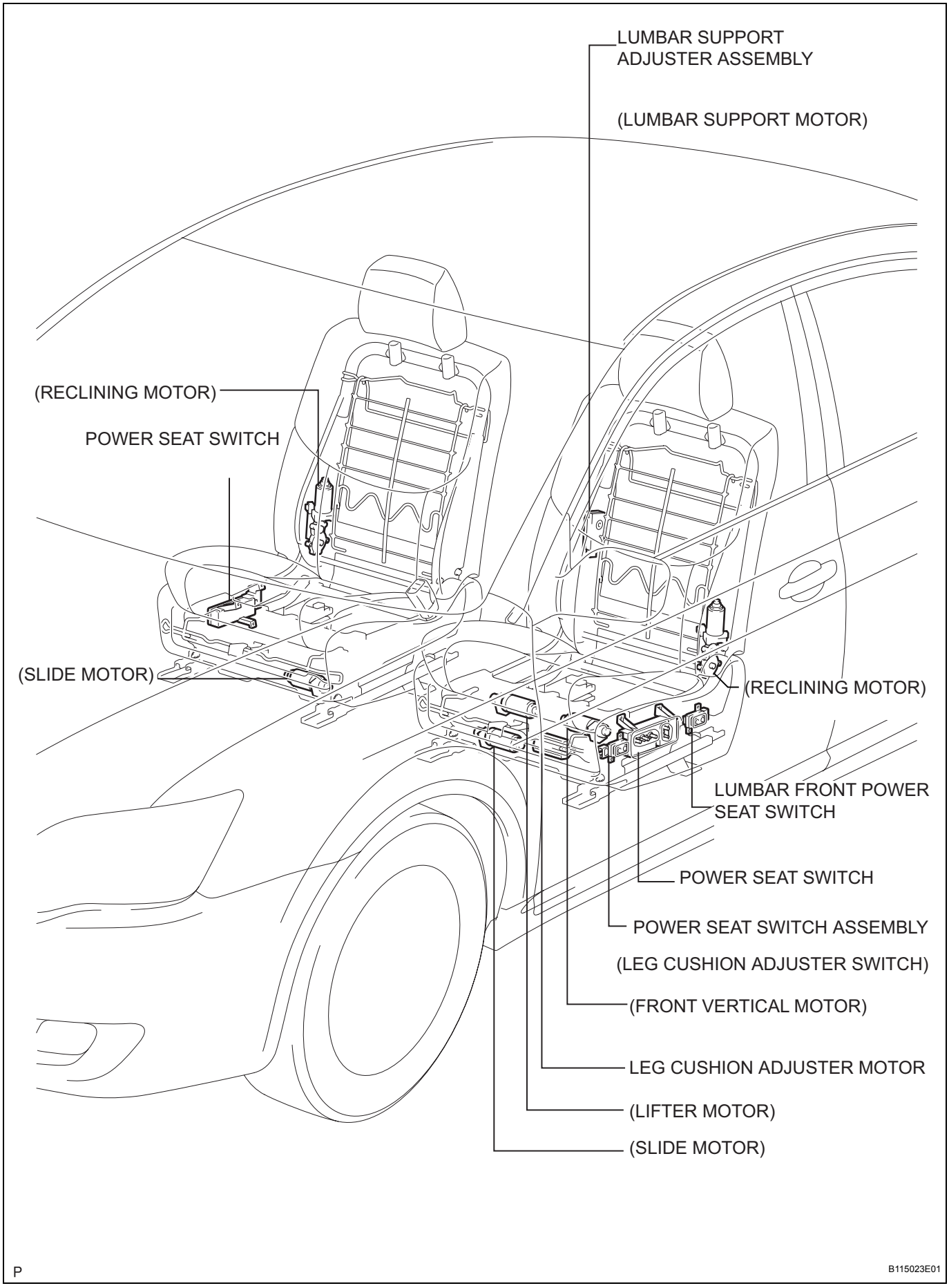
LUMBAR SUPPORT ADJUSTER ASSEMBLY
(LUMBAR SUPPORT MOTOR)
(RECLINING MOTOR)
POWER SEAT SWITCH
(SLIDE MOTOR)
(RECLINING MOTOR)
LUMBAR FRONT POWER SEAT SWITCH
POWER SEAT SWITCH
POWER SEAT SWITCH ASSEMBLY
(LEG CUSHION ADJUSTER SWITCH)
(FRONT VERTICAL MOTOR)
LEG CUSHION ADJUSTER MOTOR
(LIFTER MOTOR)
(SLIDE MOTOR)
P
B115023E01

SE

PROBLEM SYMPTOMS TABLE

HINT:
Use the table below, with suspected areas listed in order of possible occurrence, to determine the cause of the problem. Inspect and repair or replace parts as necessary according to the steps on the following pages.

FRONT POWER SEAT CONTROL SYSTEM (W/O MEMORY)

Symptom	Suspected area	See page
Power seat does not operate (slide, front vertical, lifter, reclining).	1. ALT, P/SEAT fuse	-
	2. Front power seat switch	SE-79
	3. Wire harness or connector	-
Slide operation function only does not operate.	1. Front power seat switch	SE-79
	2. Front seat adjuster (Slide motor)	SE-82
	3. Wire harness or connector	-
Front vertical operation function only does not operate.	1. Front power seat switch	SE-79
	2. Front seat adjuster (Front vertical motor)	SE-82
	3. Wire harness or connector	-
Lifter operation function only does not operate.	1. Front power seat switch	SE-79
	2. Front seat adjuster (Lifter motor)	SE-82
	3. Wire harness or connector	-
Reclining operation function only does not operate.	1. Front power seat switch	SE-79
	2. Front seat adjuster (Reclining motor)	SE-82
	3. Wire harness or connector	-
Lumbar support operation function only does not operate (Driver seat only).	1. Lumber front power seat switch	SE-85
	2. Lumber support adjuster motor	SE-86
	3. Wire harness or connector	-
Leg cushion adjuster operation function only does not operate (Driver seat only).	1. Power seat switch assembly (Leg cushion adjuster)	SE-81
	2. Front seat adjuster (Leg cushion adjuster motor)	SE-82
	3. Wire harness or connector	-

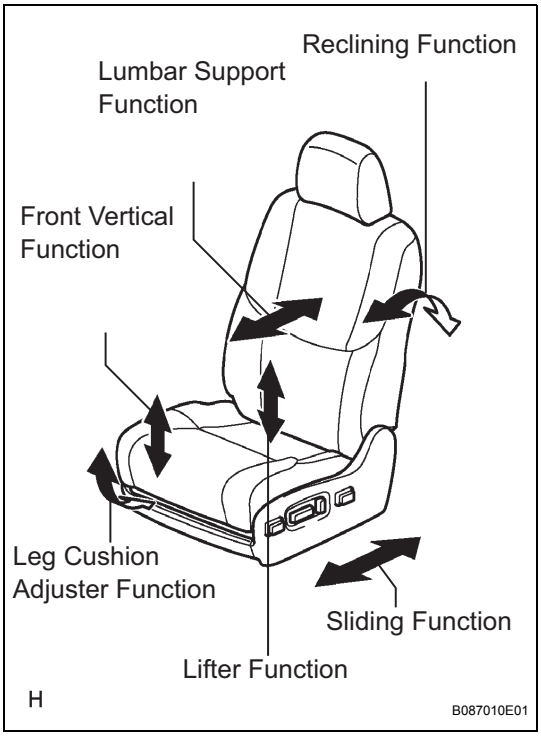

ON-VEHICLE INSPECTION

1. CHECK POWER SEAT MOTOR

(a) Check the basic functions.

(1) Operate the power seat switches and check that the following seat functions work:

- Sliding
- Front vertical (Driver side seat only)
- Lifter (Driver side seat only)
- Reclining
- Lumbar support (Driver side seat only)
- Leg cushion adjuster (Driver side seat only)

2. CHECK FRONT SEAT ADJUSTER

(a) Check PTC operation inside the power seat motor.

HINT:
The PTC thermistor's resistance increases when the power seat switch is held down even after the power seat has been moved to the furthest possible position in one direction. When the resistance increases, the current is shut off to prevent a short circuit.

NOTICE:
Perform procedure "A" to "D" to check the full range of motion for each power seat function.

(1) Choose a power seat function. Operate the power seat switch and move the seat to the furthest possible position in one direction. Keep the seat in that position for approximately 60 seconds (Procedure "A").
(2) Operate the power seat switch again and continue to try to move the seat in the same direction as in procedure "A". Measure the time until the electrical current is shut off (motor operation sound will stop) (Procedure "B").
Standard:
4 to 90 seconds
(3) Turn the power seat switch off after the current is shut off, and maintain that condition for approximately 60 seconds (Procedure "C").
(4) Operate the same switch again and move the seat to the position opposite to the direction in procedure "A". Check that the motor operates (Procedure "D").
(5) Repeat procedure "A" to "D" for the remaining power seat functions.

3. CHECK LUMBAR SUPPORT ADJUSTER ASSEMBLY LH

(a) Inspect PTC operation inside the power seat motor.
NOTICE:
This inspection should be performed with the seat installed in the vehicle.
(1) Move the lumbar support to either the foremost or rearmost position by operating the lumbar support switch, and hold it there for approx. 60 seconds.
(2) Try to move the lumbar support past the furthest possible position using the switch and measure the time until the electrical current is shut off (motor operation sound will stop).
Standard:
4 to 90 seconds
(3) Turn the lumbar support switch off after the current is shut off, and maintain that condition for approx. 60 seconds.
(4) Operate the lumbar support switch to move the lumbar support to the opposite position and check that the motor operates.

4. CHECK FRONT SEAT ADJUSTER

(a) Inspect PTC operation inside the power seat motor.
NOTICE:
The inspection should be performed with the seat installed in the vehicle.

SE

(1) Move the leg cushion to either the foremost or rearmost position by operating the leg cushion switch, and hold it there for approx. 60 seconds.
(2) Try to move the leg cushion past the furthest possible position using the switch and measure the time until the electrical current is shut off (motor operation sound will stop).
Standard:
4 to 90 seconds
(3) Turn the leg cushion switch off after the current is shut off, and maintain that condition for approx. 60 seconds.
(4) Operate the leg cushion switch to move the leg cushion to the opposite position and check that the motor operates.

SEAT HEATER SYSTEM

PARTS LOCATION

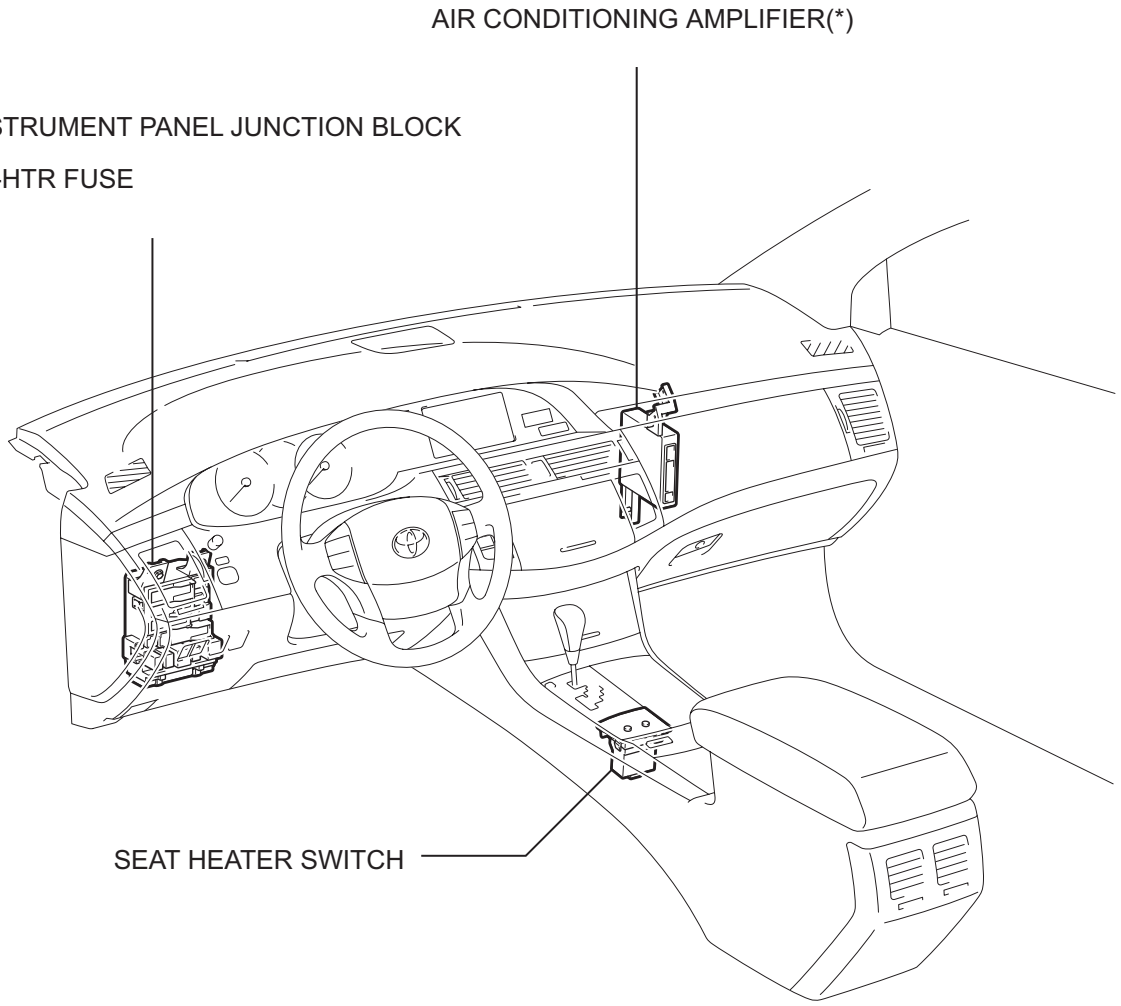

*: WITH SEAT VENTILATOR

P

B115024E03

SE

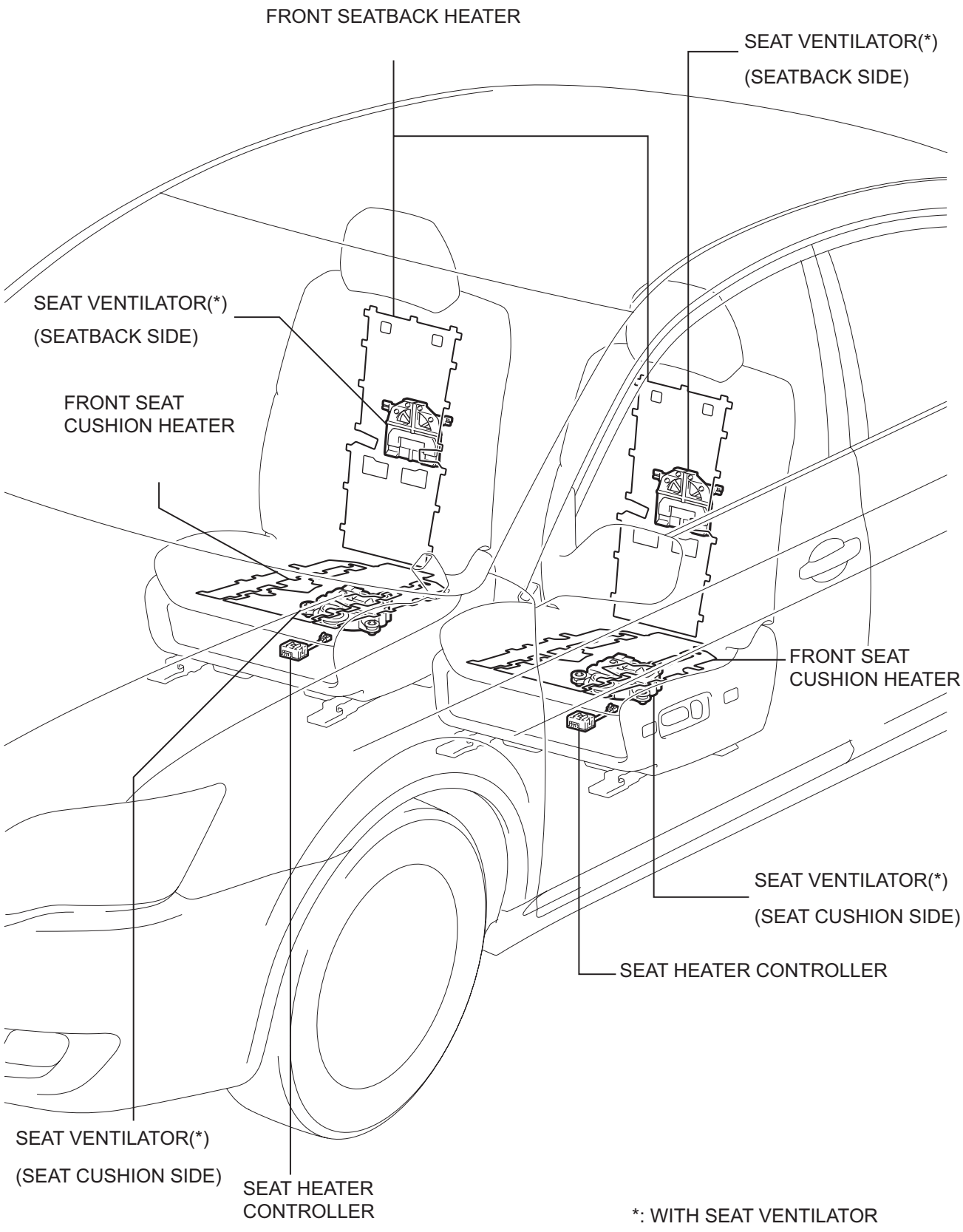

SE

P

B115025E03

PROBLEM SYMPTOMS TABLE

HINT:
Use the table below, with suspected areas listed in numerical order, to determine the cause of the problem. Inspect and repair or replace parts as necessary according to the steps on the following pages.

SEAT VENTILATION/HEATING SYSTEM

Symptom	Suspected area	See page
Seat heaters do not operate (without seat ventilator).	1. S-HTR fuse	-
	2. Seat heater switch	SE-87
	3. Front seat cushion heater assembly	SE-89
	4. Front seatback heater assembly	SE-88
	5. Seat heater circuit	SE-33
	6. Seat heater controller	-
Seat heaters do not operate (with seat ventilator).	1. S-HTR fuse	-
	2. Front seat cushion heater assembly	SE-89
	3. Front seatback heater assembly	SE-88
	4. Air conditioning amplifier (Seat ventilation/heating switch circuit) (for driver side)	AC-85
	5. Air conditioning amplifier (Seat ventilation/heating switch circuit) (for front passenger side)	AC-88
	6. Seat heater controller	-
Temperature of seat heater cannot be adjusted (without seat ventilator).	Seat heater switch	SE-87
Temperature of seat heater cannot be adjusted (with seat ventilator).	1. Seat ventilator/heater switch (Heater control housing sub-assembly) (for driver side)	AC-85
	2. Seat ventilator/heater switch (Heater control housing sub-assembly) (for front passenger side)	AC-88
	3. Wire harness or connector	-
Seat ventilators do not operate.	1. S-HTR fuse	-
	2. Seat ventilator circuit	SE-33
	3. Air conditioning amplifier (Seat ventilation/heating switch circuit)	AC-108
	4. Seat ventilator	-
Intensity of seat ventilator cannot be adjusted.	1. Seat ventilator/heater switch (Heater control housing sub-assembly)	AC-108
	2. Wire harness or connector	-

Wire Harness Front View:

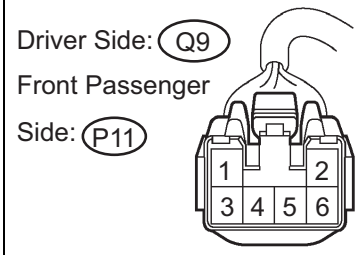

ON-VEHICLE INSPECTION

1. INSPECT SEAT HEATER CIRCUIT

(a) Disconnect the connector from the seat heater controller.

(b) Measure the voltage according to the value(s) in the table below.

Voltage:

Driver side

Tester Connection	Condition	Specified Condition
Q9-4 (B) - Body ground	Ignition switch off	Below 1 V
Q9-4 (B) - Body ground	Ignition switch on (IG)	10 to 14 V

Front passenger side

Tester Connection	Condition	Specified Condition
P11-4 (B) - Body ground	Ignition switch off	Below 1 V

SE

Tester Connection	Condition	Specified Condition
P11-4 (B) - Body ground	Ignition switch on (IG)	10 to 14 V

If the voltage is not as specified, repair or replace the wire harness or connector.

(c) Measure the resistance according to the value(s) in the table below.

Resistance:

Driver side

Tester Connection	Condition	Specified Condition
Q9-1 (SWL) - Q9-5 (THL)	Ignition switch off	0.6 to 4.5 kΩ (*1)
Q9-1 (SWL) - Body ground	Ignition switch off	10 kΩ or higher
Q9-5 (THL) - Body ground	Ignition switch off	10 kΩ or higher
Q9-6 (E) - Body ground	Always	Below 1 Ω

Front passenger side

Tester Connection	Condition	Specified Condition
P11-1 (SWR) - P11-5 (THR)	Ignition switch off	0.6 to 4.5 kΩ (*1)
P11-1 (SWR) - Body ground	Ignition switch off	10 kΩ or higher
P11-5 (THR) - Body ground	Ignition switch off	10 kΩ or higher
P11-6 (E) - Body ground	Always	Below 1 Ω

HINT:

*1: Conditions vary with the seat heater switch position.

If the resistance is not as specified, repair or replace the wire harness or connector.

Wire Harness Front View:



SE

2. INSPECT SEAT HEATER SWITCH CIRCUIT

(a) Disconnect the seat heater switch connector.

(b) Measure the voltage according to the value(s) in the table below.

Voltage

Tester Connection	Condition	Specified Condition
D27-2 (IG) - Body ground	Ignition switch off	Below 1 V
D27-2 (IG) - Body ground	Ignition switch on (IG)	10 to 14 V

If the voltage is not as specified, repair or replace the wire harness or connector.

(c) Measure the resistance according to the value(s) in the table below.

Resistance

Tester Connection	Condition	Specified Condition
D27-7 (E) - Body ground	Always	Below 1 Ω

If the resistance is not as specified, repair or replace the wire harness or connector.

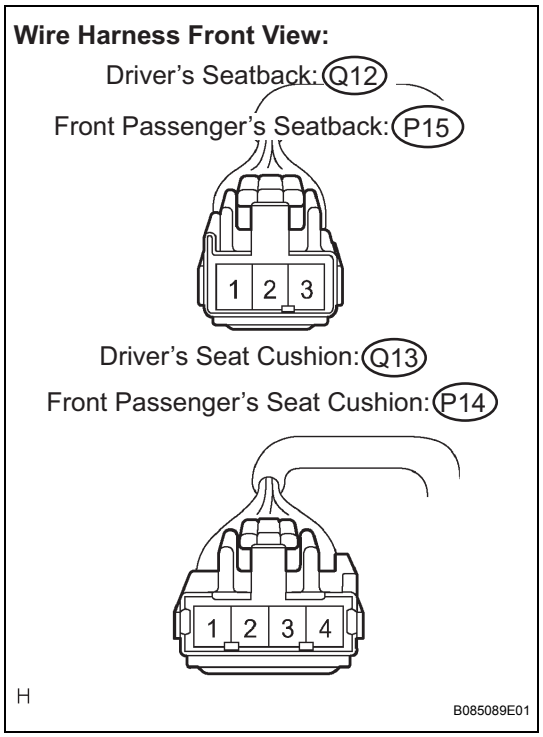

3. INSPECT FRONT SEAT ASSEMBLY LH

(a) Disconnect the seat ventilator connectors.

(b) Measure the resistance according to the value(s) in the table below.

Resistance:

Driver side

Tester Connection	Condition	Specified Condition
Q12-2 - Q13-2	Always	Below 1 Ω
Q12-3 - Q13-3	Always	Below 1 Ω
Q12-1 - Body ground	Always	Below 1 Ω
Q13-2 - Body ground	Always	10 kΩ or higher
Q13-4 - Body ground	Always	Below 1 Ω

Front passenger side

Tester Connection	Condition	Specified Condition
P15-2 - P14-2	Always	Below 1 Ω
P15-3 - P14-3	Always	Below 1 Ω
P15-1 - Body ground	Always	Below 1 Ω
P14-2 - Body ground	Always	10 kΩ or higher
P14-4 - Body ground	Always	Below 1 Ω

If the continuity is not as specified, repair or replace the wire harness or connector.

(c) Measure the voltage according to the value(s) in the table below.

Voltage:

Driver side

Tester Connection	Condition	Specified Condition
Q13-1 - Body ground	Ignition switch on (IG)	10 to 14 V

Front passenger side

Tester Connection	Condition	Specified Condition
P14-1 - Body ground	Ignition switch on (IG)	10 to 14 V

If the voltage is not as specified, repair or replace the wire harness or connector.

(d) Measure the voltage according to the value(s) in the table below.

Voltage:

Driver side

Tester Connection	Condition	Specified Condition
Q12-3 - Body ground	Seat ventilation switch is ON	0 to 5 V (Pulse generation*1)
Q13-3 - Body ground	Seat ventilation switch is ON	0 to 5 V (Pulse generation*1)

Front passenger side

Tester Connection	Condition	Specified Condition
P15-3 - Body ground	Seat ventilation switch is ON	0 to 5 V (Pulse generation*1)
P14-3 - Body ground	Seat ventilation switch is ON	0 to 5 V (Pulse generation*1)

SE

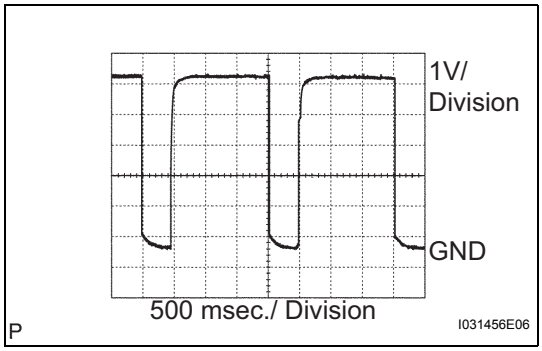

If the voltage is not as specified, inspect the seat ventilator/heater switch (heater control housing) and wire harness or connector according to the problem symptoms table (See page SE-33).

(1) *1: Waveform
HINT:
Waveform varies with the blower level.

FRONT SEAT ASSEMBLY (for Manual Seat)

COMPONENTS

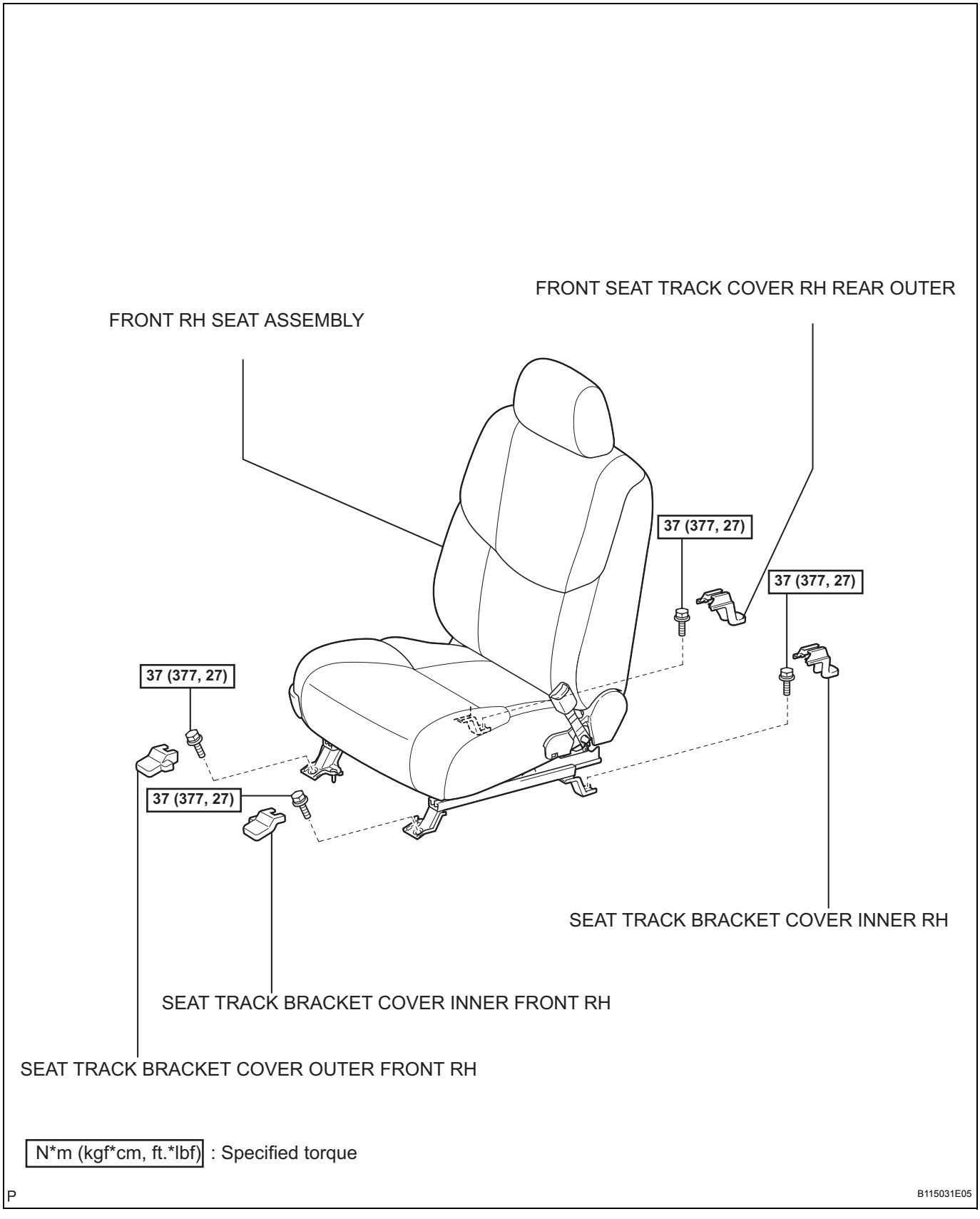

SE

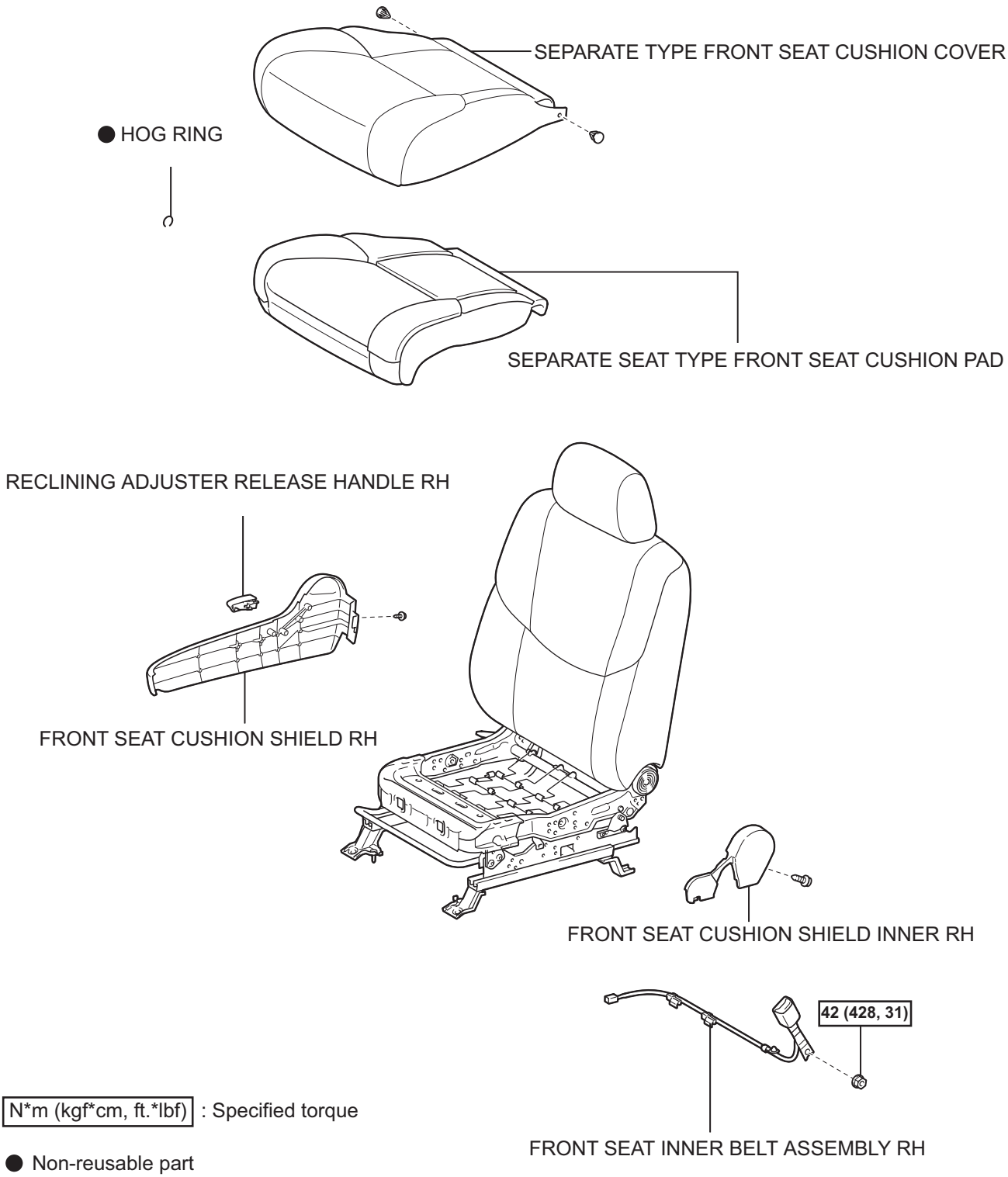

N*m (kgf*cm, ft.*lbf) : Specified torque

● Non-reusable part

P

B115032E01

SE

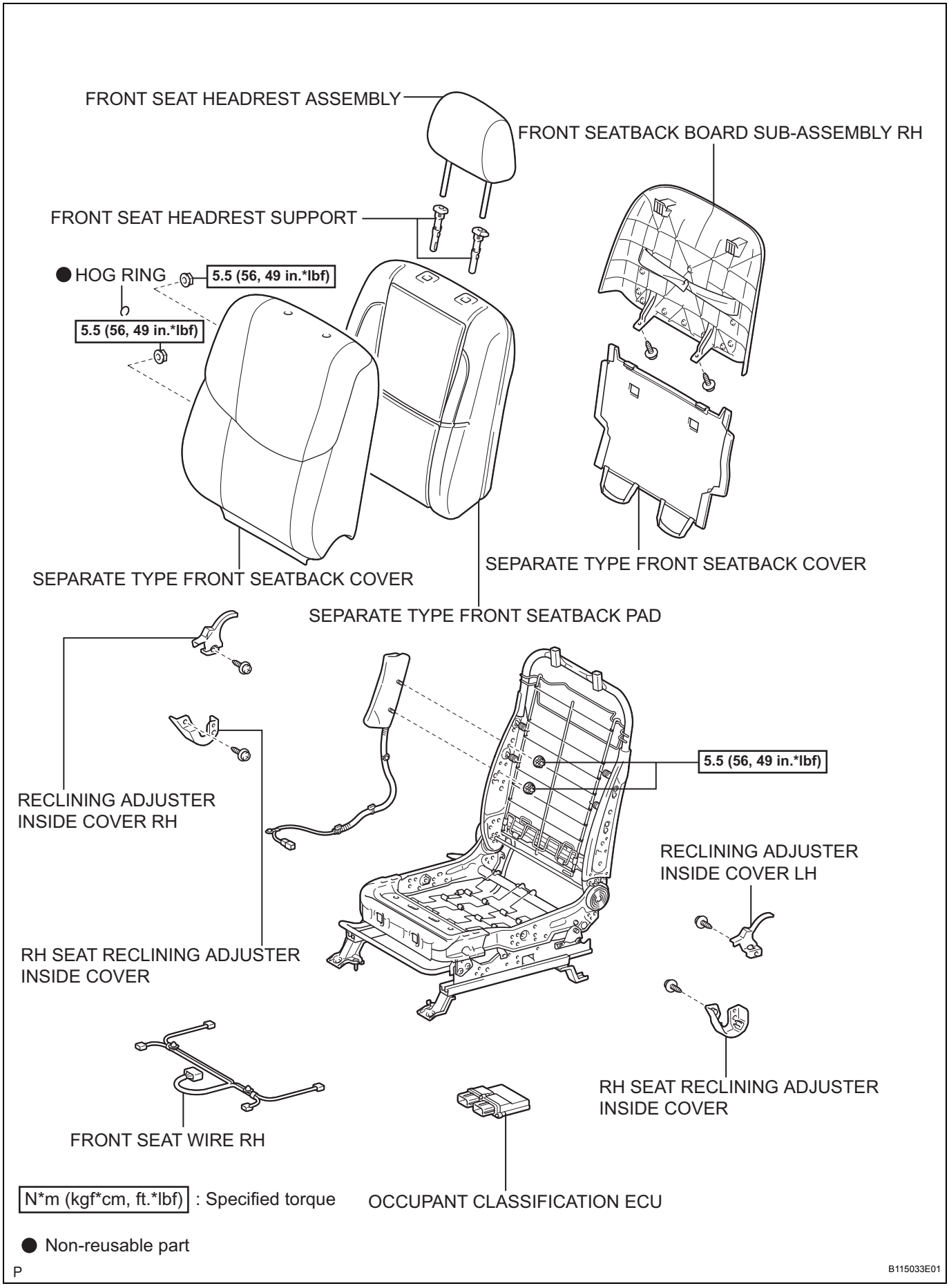
FRONT SEAT HEADREST ASSEMBLY
FRONT SEATBACK BOARD SUB-ASSEMBLY RH
FRONT SEAT HEADREST SUPPORT
● HOG RING
5.5 (56, 49 in.*lbf)
5.5 (56, 49 in.*lbf)
SEPARATE TYPE FRONT SEATBACK COVER
SEPARATE TYPE FRONT SEATBACK COVER
SEPARATE TYPE FRONT SEATBACK PAD
5.5 (56, 49 in.*lbf)
RECLINING ADJUSTER INSIDE COVER RH
RECLINING ADJUSTER INSIDE COVER LH
RH SEAT RECLINING ADJUSTER INSIDE COVER
RH SEAT RECLINING ADJUSTER INSIDE COVER
FRONT SEAT WIRE RH
OCCUPANT CLASSIFICATION ECU
N*m (kgf*cm, ft.*lbf) : Specified torque
● Non-reusable part
P
B115033E01

SE

REMOVAL

CAUTION:

- **Always wear safety gloves because the edges of the seatback frame and seat adjuster are sharp and may cause injury.**
- **Work must be started more than 90 seconds after the ignition switch is turned off and the negative (-) terminal cable is disconnected from the battery. (The SRS is equipped with a back-up power source. If work is started within 90 seconds after disconnecting the negative (-) terminal cable of the battery, the SRS may deploy.)**

HINT:

- Installation is in the reverse order of removal. However, special points concerning installation are indicated.
- Use the same procedures for the RH side and LH side.

1. **DISCONNECT BATTERY NEGATIVE TERMINAL**
   HINT:
   See page RS-1
2. **REMOVE SEAT TRACK BRACKET COVER OUTER FRONT RH**
   (a) Disengage the 2 claws and remove the seat track bracket cover outer front RH.
3. **REMOVE SEAT TRACK BRACKET COVER INNER FRONT RH**
   (a) Disengage the 2 claws and remove the seat track bracket cover inner front RH.
4. **REMOVE FRONT SEAT TRACK COVER RH REAR OUTER**
   (a) Disengage the 2 claws and remove the front seat track cover RH rear outer.
5. **REMOVE SEAT TRACK BRACKET COVER INNER RH**
   (a) Disengage the 2 claws and remove the seat track bracket cover inner RH.
6. **REMOVE FRONT RH SEAT ASSEMBLY**
   (a) Remove the 4 bolts.
   (b) Disconnect the connectors and clamp.
   (c) Remove the front RH seat assembly.

DISASSEMBLY

1. **REMOVE FRONT SEAT INNER BELT ASSEMBLY RH**
2. **REMOVE RECLINING ADJUSTER RELEASE HANDLE RH**
   (a) Using a screwdriver, pry out the reclining adjuster release handle RH.
   HINT:
   Tape the screwdriver tip before use.
3. **REMOVE FRONT SEAT CUSHION SHIELD RH**
   (a) Remove the screw and the front seat cushion shield RH.
4. **REMOVE FRONT SEAT CUSHION SHIELD INNER RH**
   (a) Remove the screw and the front seat cushion shield inner RH.
5. **REMOVE SEAT CUSHION COVER WITH PAD**
   (a) Disengage the hook and remove the 2 clips and the seat cushion cover together with the pad.
6. **REMOVE SEPARATE TYPE FRONT SEAT CUSHION COVER**
   (a) Remove the hog rings and separate type front seat cushion cover.
7. **REMOVE FRONT SEAT HEADREST ASSEMBLY**
8. **REMOVE FRONT SEATBACK BOARD SUB-ASSEMBLY RH**
   (a) Remove the 2 screws.
   (b) Disengage the 2 claws and remove the front seatback board sub-assembly RH.
9. **REMOVE SEPARATE TYPE FRONT SEATBACK COVER**
   (a) Disengage the hooks and remove the separate type front seatback cover.
10. **REMOVE FRONT SEAT HEADREST SUPPORT**
    (a) Disengage the 2 claws and remove the front seat headrest support (LH side).
11. **REMOVE FRONT SEAT HEADREST SUPPORT**
    HINT:
    Use the same procedures for the RH side and LH side.
12. **REMOVE SEATBACK COVER WITH PAD**
    (a) Remove the 2 nuts and disconnect the separate type front seatback cover bracket.
    (b) Remove the seatback cover with pad.
13. **REMOVE SEPARATE TYPE FRONT SEATBACK COVER**
    (a) Remove the hog rings and the separate type front seatback cover.

14. **REMOVE RH SEAT RECLINING ADJUSTER INSIDE COVER**
    (a) Remove the screw and the RH seat reclining adjuster inside cover.

15. **REMOVE RH SEAT RECLINING ADJUSTER INSIDE COVER**
    HINT:
    Use the same procedures for the RH side and LH side.

16. **REMOVE RECLINING ADJUSTER INSIDE COVER RH**
    (a) Remove the screw and the reclining adjuster inside cover RH.

17. **REMOVE RECLINING ADJUSTER INSIDE COVER LH**
    HINT:
    Use the same procedures for the RH side and LH side.

18. **REMOVE OCCUPANT CLASSIFICATION ECU (See page RS-371)**

19. **REMOVE FRONT SEAT WIRE RH**

REASSEMBLY

1. **INSTALL OCCUPANT CLASSIFICATION ECU (See page RS-371)**

2. **INSTALL SEPARATE TYPE FRONT SEATBACK COVER**
   (a) Install the seatback pad.
   (b) Cover the top of the seatback pad with the separate type front seatback cover.
   (c) Using hog ring pliers, install the separate type front seatback cover to the seatback pad with new hog rings.
   NOTICE:
   - **Be careful not to damage the cover.**
   - **When installing the hog rings, take care to minimize wrinkles as much as possible.**

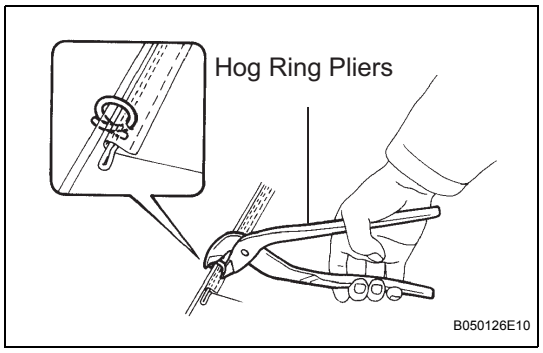

3. **INSTALL SEATBACK COVER WITH PAD**
   (a) Install the seatback cover with pad.
   (b) Install the separate type front seatback cover bracket with the 2 nuts.
   Torque: 5.5 N*m (56 kgf*cm, 49 in.*lbf)
   (c) Using hog ring pliers, install the separate type front seatback cover.
   NOTICE:
   - **Be careful not to damage the cover.**
   - **When installing the hog rings, take care to minimize wrinkles as much as possible.**
   (d) Engine the hooks.

4. **INSTALL SEPARATE TYPE FRONT SEAT CUSHION COVER**
   (a) Install the front seat cushion pad to the seat cushion cover.
   (b) Using hog ring pliers, install the separate type front seat cushion cover to the seat cushion pad with new hog rings.
   NOTICE:
   - **Be careful not to damage the cover.**
   - **When installing the hog rings, take care to minimize wrinkles as much as possible.**

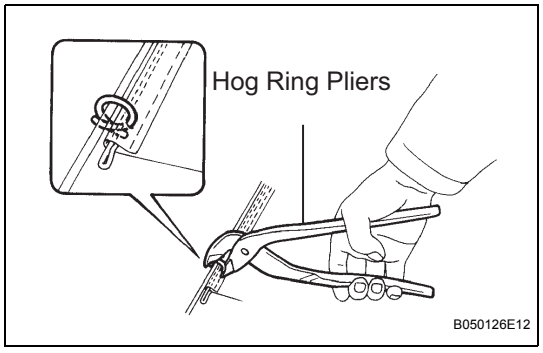

5. **INSTALL FRONT SEAT INNER BELT ASSEMBLY RH**

SE

INSTALLATION

1. **INSTALL FRONT RH SEAT ASSEMBLY**
   (a) Connect the connectors under the front seat assembly LH.
   (b) Install the front seat assembly LH with the 4 bolts.
   Torque: 37 N*m (375 kgf*cm, 27 ft.*lbf)
2. **CONNECT BATTERY NEGATIVE TERMINAL**
3. **PERFORM SYSTEM INITIALIZE**
   HINT:
   See page IN-29
4. **CHECK SEAT SLIDE ADJUSTER LOOKS**
   (a) when sliding the front seat assembly LH, check that both sides of the adjuster lock simultaneously.
5. **INITIALIZE FRONT PASSENGER OCCUPANT CLASSIFICATION SYSTEM**
   HINT:
   See page RS-206
6. **INSPECT SRS WARNING LIGHT**
   HINT:
   See page RS-28

FRONT SEAT ASSEMBLY (for Power Seat)

COMPONENTS

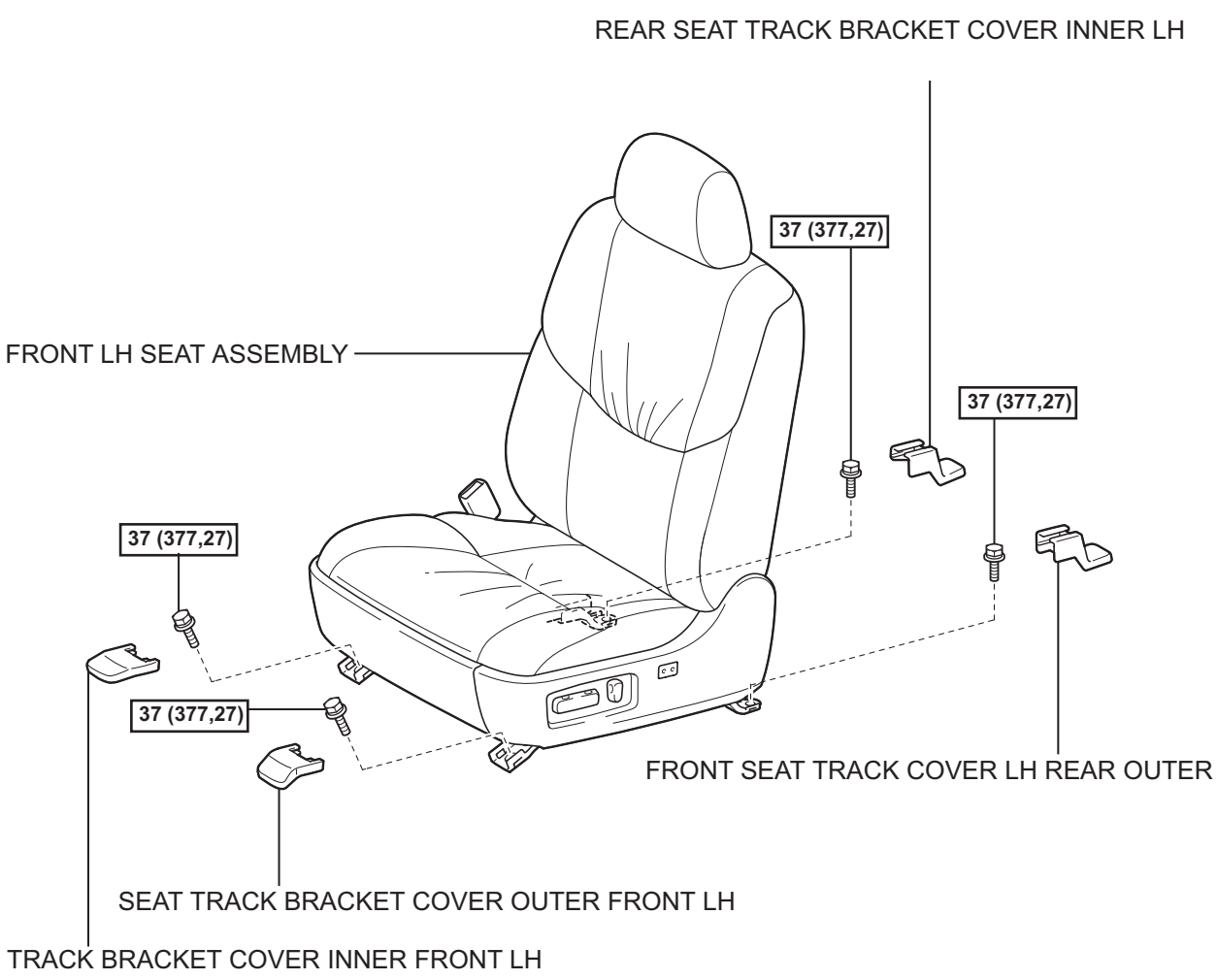

SE

N*m (kgf*cm, ft.*lbf) : Specified torque

P

B115026E01

WITHOUT LEG SUPPORT ADJUSTMENT SYSTEM:

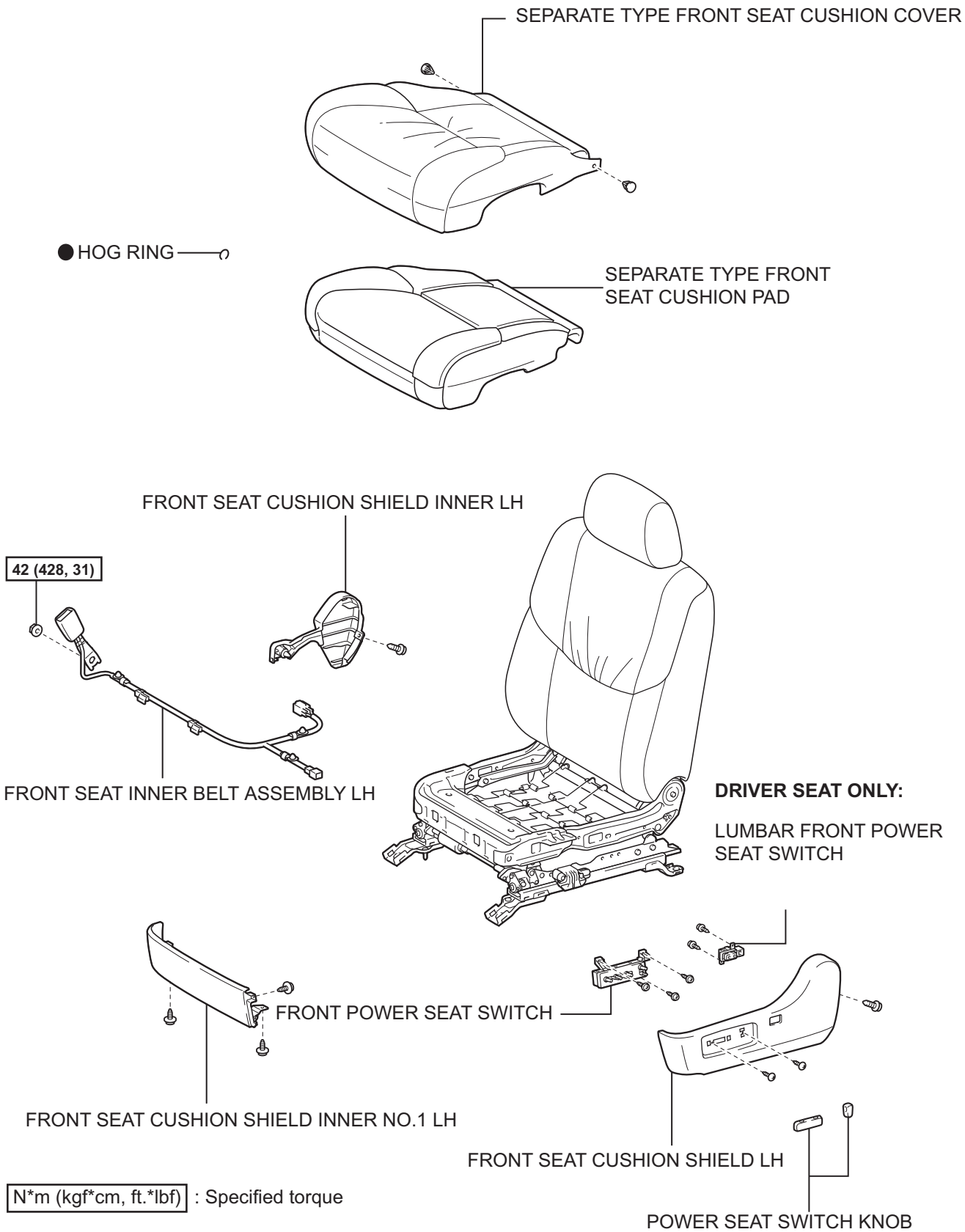

N*m (kgf*cm, ft.*lbf) : Specified torque

● Non-reusable part

P

B115027E02

SE

WITH LEG SUPPORT ADJUSTMENT SYSTEM:

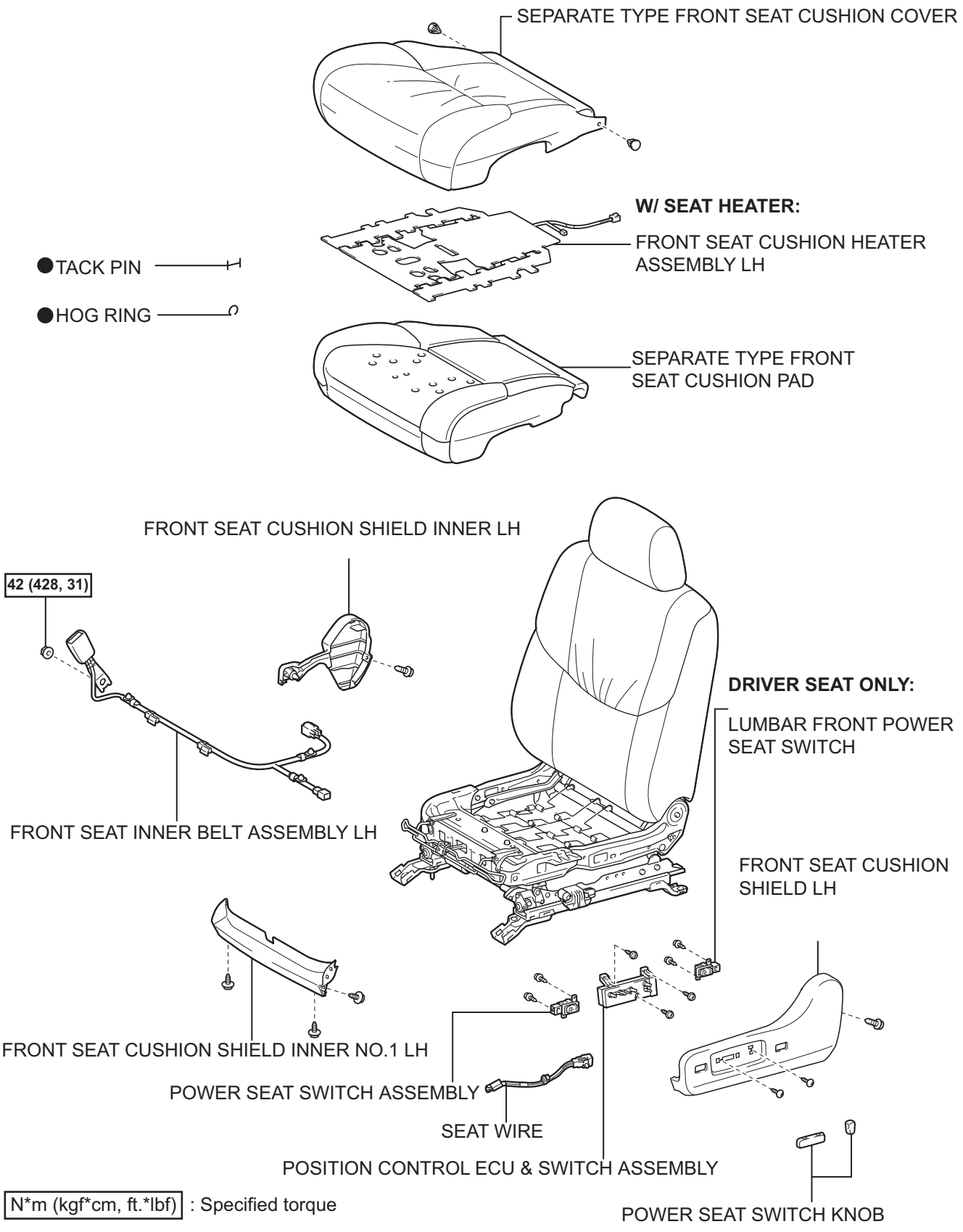

SE

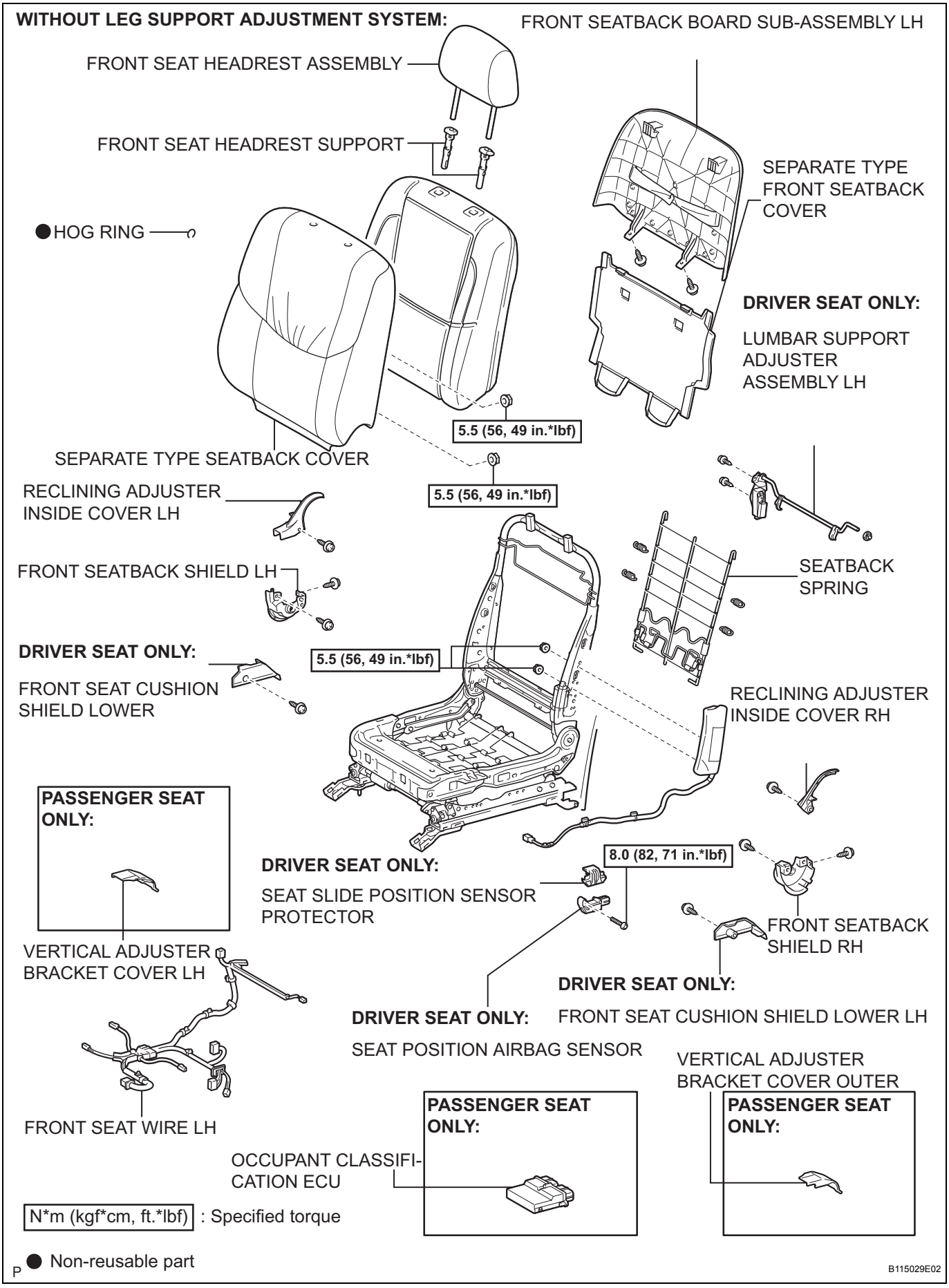
WITHOUT LEG SUPPORT ADJUSTMENT SYSTEM:
FRONT SEATBACK BOARD SUB-ASSEMBLY LH
FRONT SEAT HEADREST ASSEMBLY
FRONT SEAT HEADREST SUPPORT
SEPARATE TYPE FRONT SEATBACK COVER
HOG RING
DRIVER SEAT ONLY:
LUMBAR SUPPORT ADJUSTER ASSEMBLY LH
5.5 (56, 49 in.*lbf)
SEPARATE TYPE SEATBACK COVER
5.5 (56, 49 in.*lbf)
RECLINING ADJUSTER INSIDE COVER LH
SEATBACK SPRING
FRONT SEATBACK SHIELD LH
DRIVER SEAT ONLY:
5.5 (56, 49 in.*lbf)
FRONT SEAT CUSHION SHIELD LOWER
RECLINING ADJUSTER INSIDE COVER RH
PASSENGER SEAT ONLY:
8.0 (82, 71 in.*lbf)
DRIVER SEAT ONLY:
SEAT SLIDE POSITION SENSOR PROTECTOR
FRONT SEATBACK SHIELD RH
VERTICAL ADJUSTER BRACKET COVER LH
DRIVER SEAT ONLY:
FRONT SEAT CUSHION SHIELD LOWER LH
DRIVER SEAT ONLY:
SEAT POSITION AIRBAG SENSOR
VERTICAL ADJUSTER BRACKET COVER OUTER
PASSENGER SEAT ONLY:
PASSENGER SEAT ONLY:
OCCUPANT CLASSIFICATION ECU
FRONT SEAT WIRE LH
N*m (kgf*cm, ft.*lbf) : Specified torque
● Non-reusable part
B115029E02

SE

WITH LEG SUPPORT ADJUSTMENT SYSTEM:

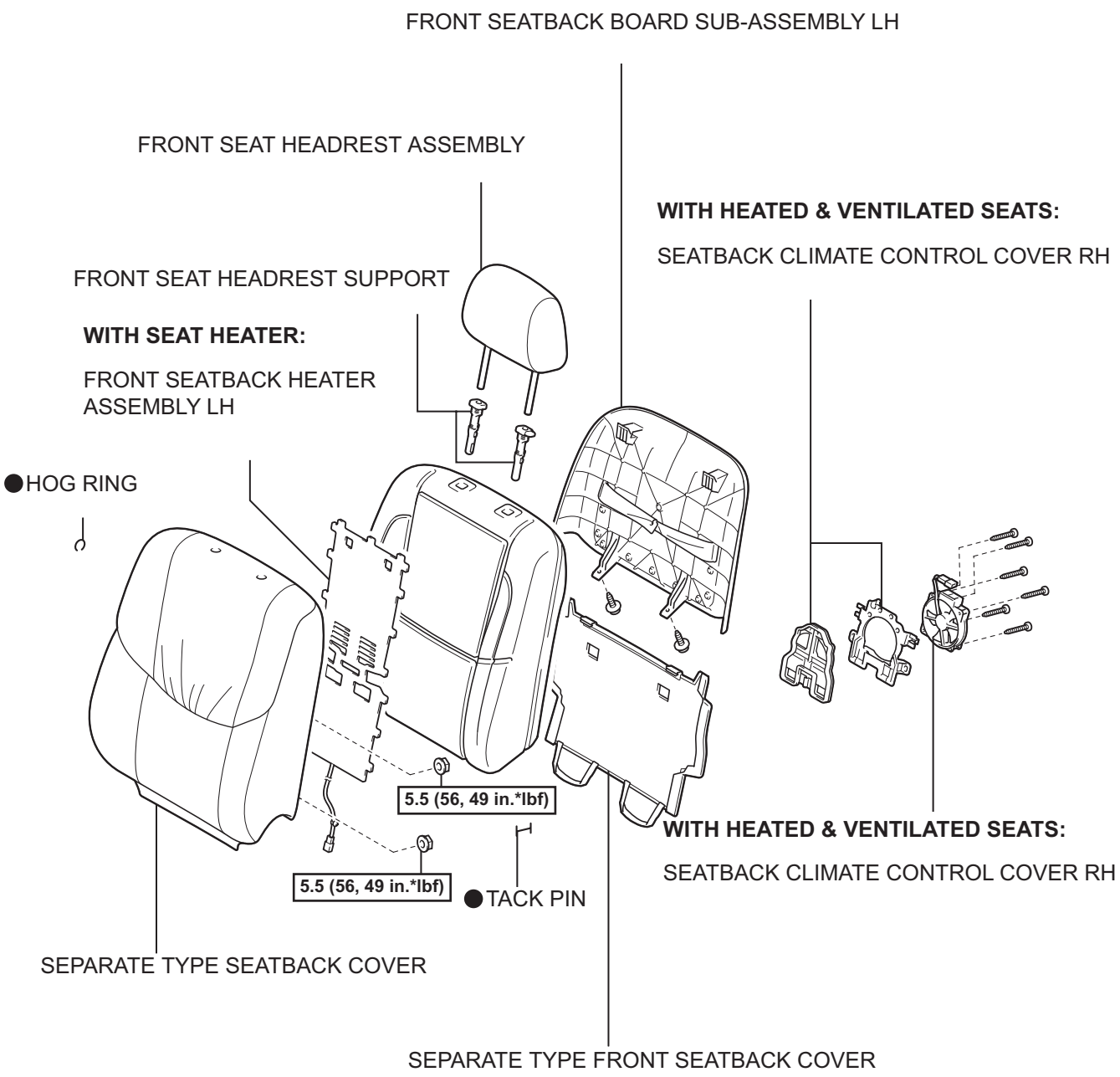

SE

P

B115056E02

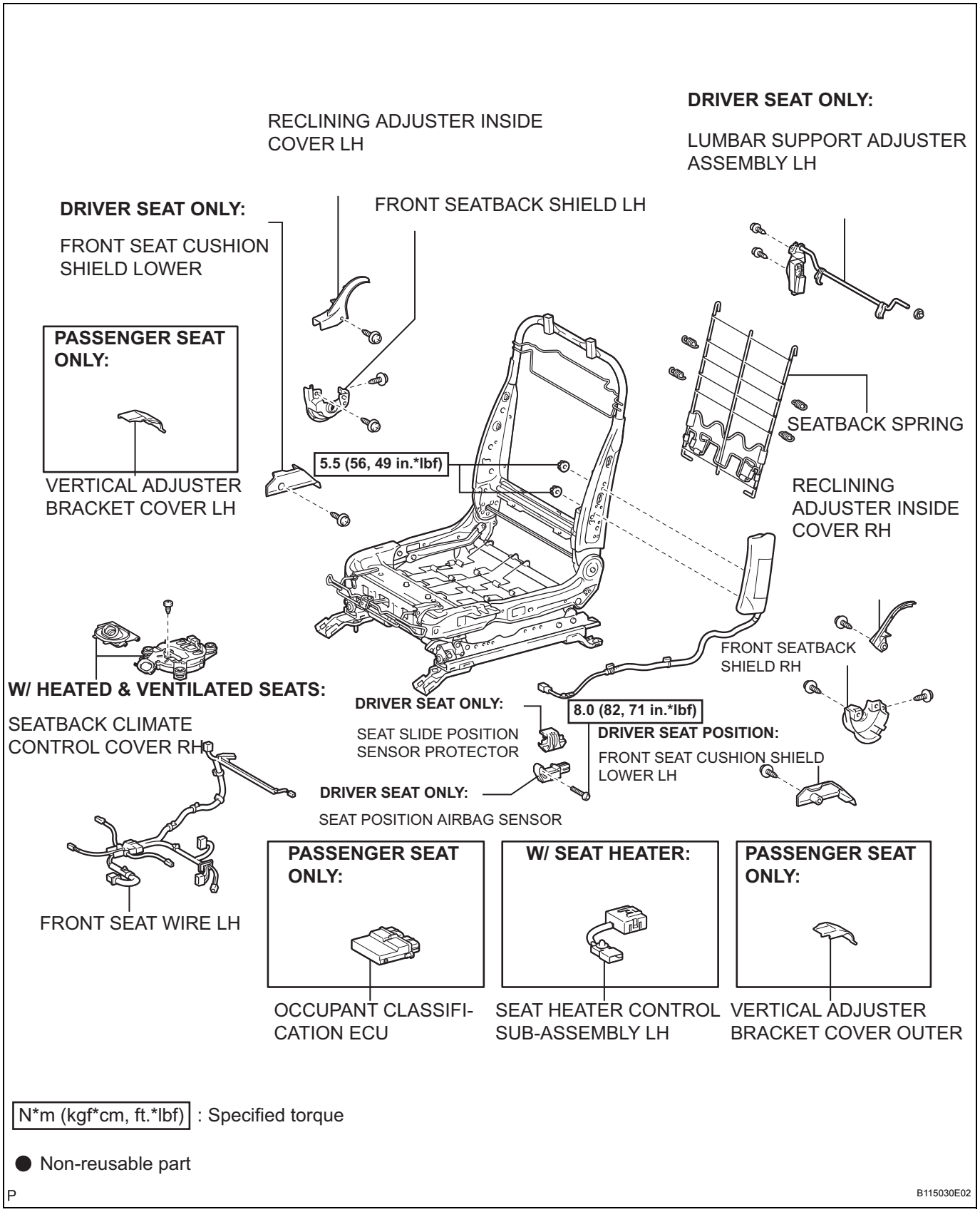
DRIVER SEAT ONLY:
LUMBAR SUPPORT ADJUSTER ASSEMBLY LH
RECLINING ADJUSTER INSIDE COVER LH
DRIVER SEAT ONLY:
FRONT SEAT CUSHION SHIELD LOWER
FRONT SEATBACK SHIELD LH
PASSENGER SEAT ONLY:
SEATBACK SPRING
5.5 (56, 49 in.*lbf)
VERTICAL ADJUSTER BRACKET COVER LH
RECLINING ADJUSTER INSIDE COVER RH
FRONT SEATBACK SHIELD RH
W/ HEATED & VENTILATED SEATS:
SEATBACK CLIMATE CONTROL COVER RH
DRIVER SEAT ONLY:
8.0 (82, 71 in.*lbf)
SEAT SLIDE POSITION SENSOR PROTECTOR
DRIVER SEAT POSITION:
FRONT SEAT CUSHION SHIELD LOWER LH
DRIVER SEAT ONLY:
SEAT POSITION AIRBAG SENSOR
FRONT SEAT WIRE LH
PASSENGER SEAT ONLY:
W/ SEAT HEATER:
PASSENGER SEAT ONLY:
OCCUPANT CLASSIFICATION ECU
SEAT HEATER CONTROL SUB-ASSEMBLY LH
VERTICAL ADJUSTER BRACKET COVER OUTER
N*m (kgf*cm, ft.*lbf) : Specified torque
● Non-reusable part
P
B115030E02

SE

REMOVAL

CAUTION:

- **Always wear safety gloves because the edges of the seatback frame and seat adjuster are sharp and may cause injury.**
- **Work must be started more than 90 seconds after the ignition switch is turned off and the negative (-) terminal cable is disconnected from the battery. (The SRS is equipped with a back-up power source. If work is started within 90 seconds after disconnecting the negative (-) terminal cable of the battery, the SRS may deploy.)**

HINT:

- Installation is in the reverse order of removal. However, special points concerning installation are indicated.
- Use the same procedures for the RH side and LH side.
- When removing/installing or overhauling the passenger seat, check the passenger occupant classification system and perform zero point calibration (See page RS-206).

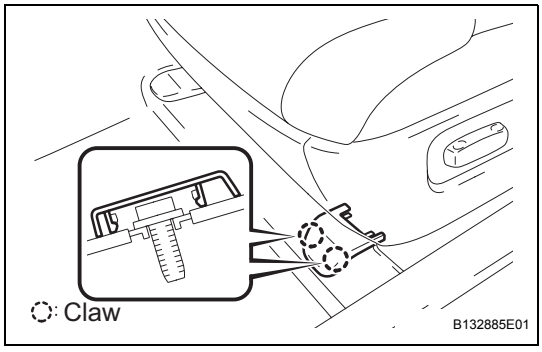

1. REMOVE SEAT TRACK BRACKET COVER OUTER FRONT LH

(a) Move the front LH seat assembly to the rearmost position by operating the power seat switch knob.

(b) Disengage the 2 claws and remove the seat track bracket cover outer front LH.

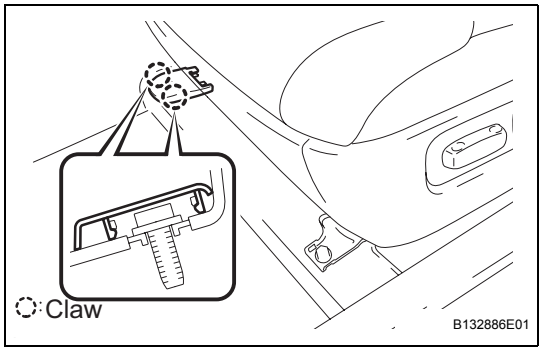

2. REMOVE SEAT TRACK BRACKET COVER INNER FRONT LH

(a) Disengage the 2 claws and remove the seat track bracket cover inner front LH.

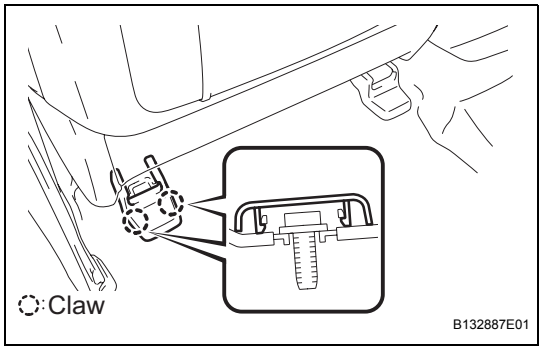

3. REMOVE FRONT SEAT TRACK COVER LH REAR OUTER

(a) Move the front LH seat assembly fully forward by operating the power seat switch knob.

(b) Disengage the 2 claws and remove the front seat track cover LH rear outer.

SE

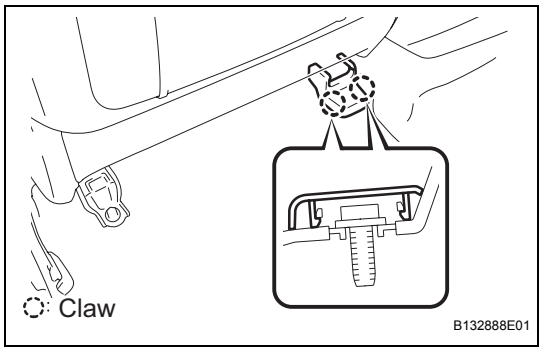

4. REMOVE REAR SEAT TRACK BRACKET COVER INNER LH

(a) Disengage the 2 claws and remove the rear seat track bracket cover inner LH.

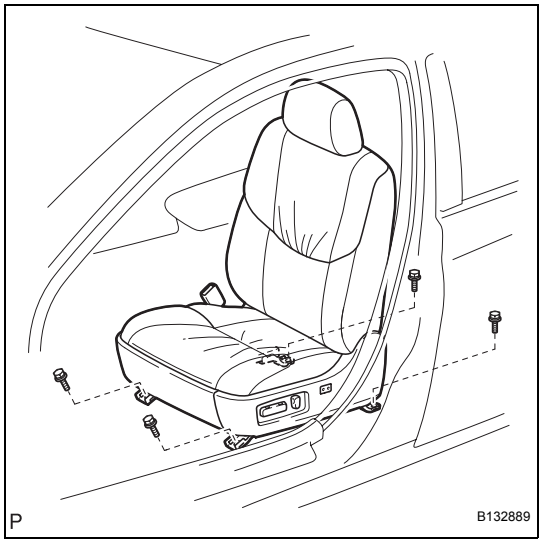

5. REMOVE FRONT LH SEAT ASSEMBLY

(a) Set the front vertical in the most upright position.
(b) Move the front LH seat assembly to the rearmost position by operating the power seat switch knob.
(c) Remove the 2 bolts on the front side.
(d) Move the front LH seat assembly fully forward by operating the power seat switch knob.
(e) Remove the 2 bolts on the rear side.
(f) Disconnect the negative battery terminal (See page RS-1).
(g) Disconnect the connectors and clamp.
(h) Remove the front LH seat assembly.

SE

DISASSEMBLY

1. REMOVE FRONT SEAT INNER BELT ASSEMBLY LH

2. REMOVE SLIDE & VERTICAL POWER SEAT SWITCH KNOB

(a) Using a screwdriver, remove the power seat switch knob.
HINT:
Tape up the screwdriver tip before use.

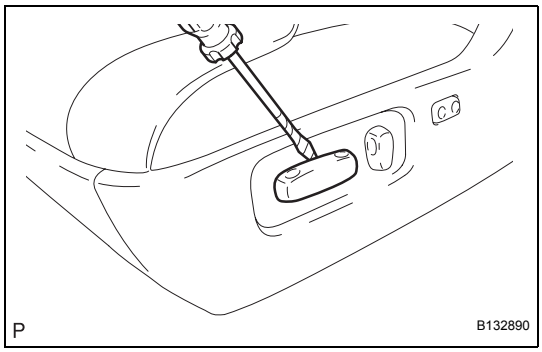

3. REMOVE RECLINING POWER SEAT SWITCH KNOB

(a) Using a screwdriver, remove the power seat switch knob.
HINT:
Tape up the screwdriver tip before use.

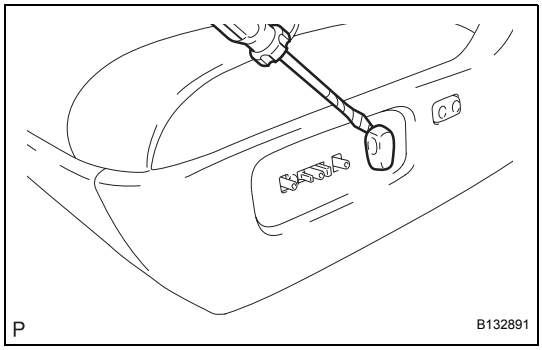

4. REMOVE FRONT SEAT CUSHION SHIELD INNER NO.1 LH

(a) Disconnect the 2 clips and the cover.

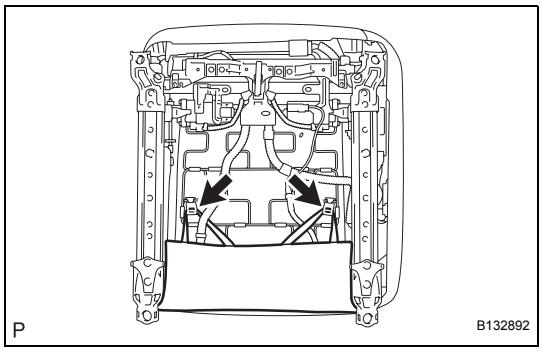

(b) Remove the 5 screws.
(c) Driver seat only:
  (1) Disconnect the lumbar front power seat switch connector.
(d) Disengage the 2 claws and remove the front seat cushion shield inner No.1 LH and front seat cushion shield LH as a unit.

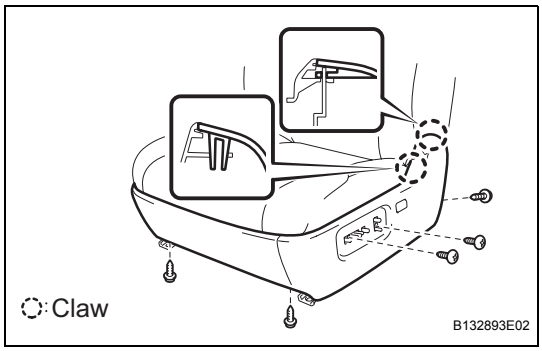

SE

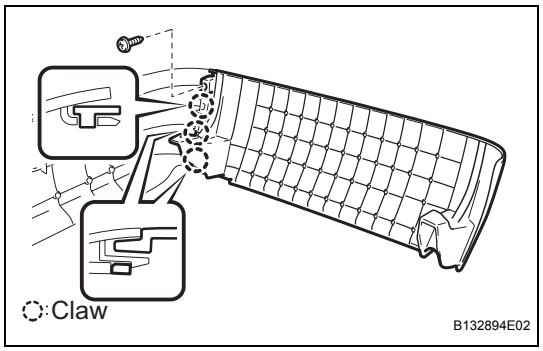

(e) without Leg support adjustment system:
(1) Remove the screw.
(2) Disengage the 3 claws and remove the front seat cushion shield inner No.1 LH.

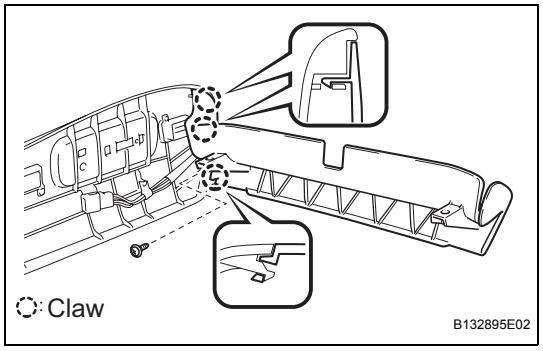

(f) with Leg support adjustment system:
(1) Remove the screw.
(2) Disengage the 3 claws and remove the front seat cushion shield inner No.1 LH.

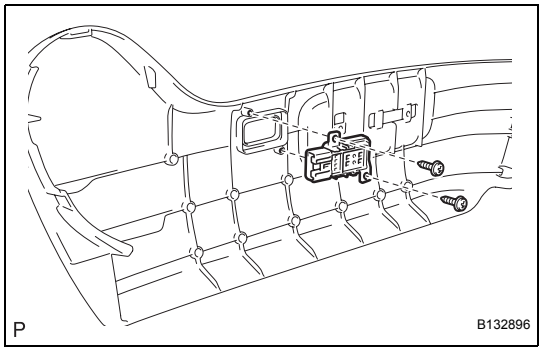

5. REMOVE LUMBAR FRONT POWER SEAT SWITCH
(a) Remove the 2 screws and the lumbar front power seat switch.

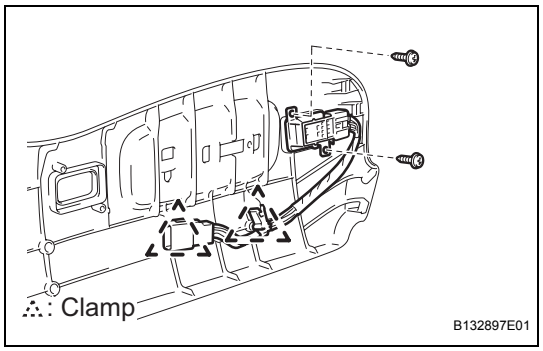

6. REMOVE POWER SEAT SWITCH ASSEMBLY
(a) Disengage the 2 clamps.
(b) Remove the 2 screws and power seat switch assembly and seat wire as a unit.

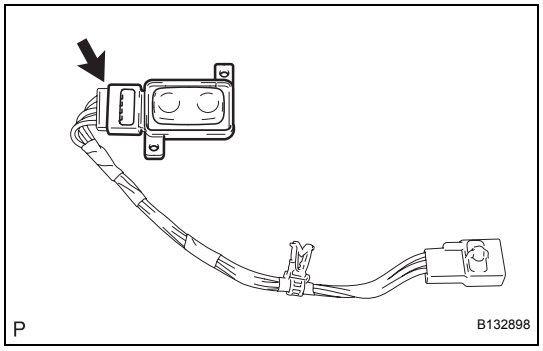

(c) Disconnect the connector and remove the power seat switch assembly.

7. REMOVE FRONT SEAT CUSHION SHIELD LH

SE

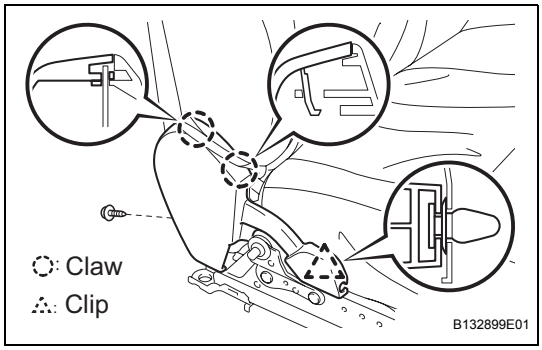

8. REMOVE FRONT SEAT CUSHION SHIELD INNER LH

(a) Remove the screw.

(b) Disengage the 2 claws and clip and remove the front seat cushion shield inner LH.

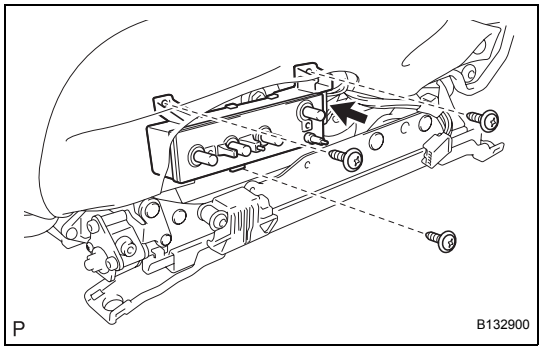

9. REMOVE FRONT POWER SEAT SWITCH

(a) Disconnect the connector.

(b) Remove the 3 screws and the front power seat switch.

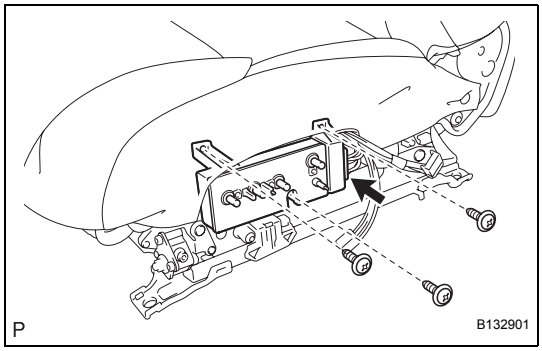

10. REMOVE FRONT POWER SEAT SWITCH

(a) Disconnect the connector.

(b) Remove the 3 screws and the position control ECU & switch assembly.

SE

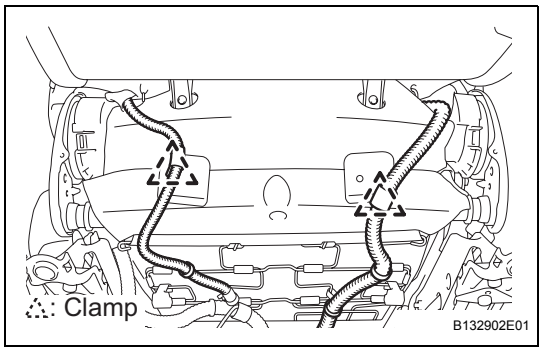

11. REMOVE SEAT CUSHION COVER WITH PAD

(a) without Seat heater system:

(1) Disengage the 2 clamps.

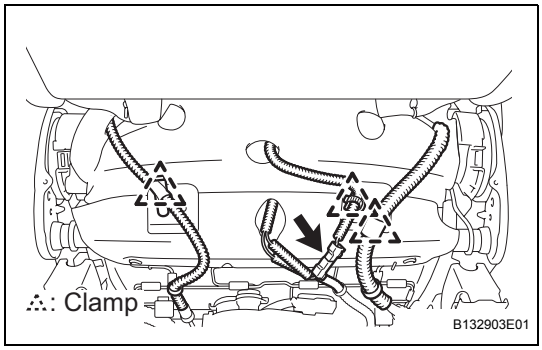

(b) with Seat heater system:

(1) Disconnect the connector.

(2) Disengage the 3 clamps.

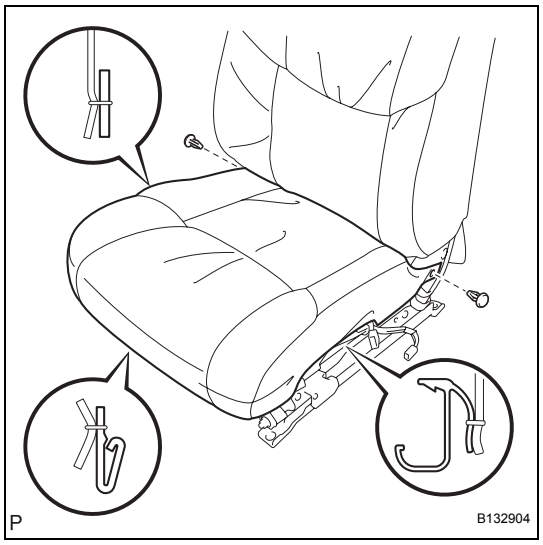

(c) Disengage the hooks and remove the 2 clips and the seat cushion cover with pad.

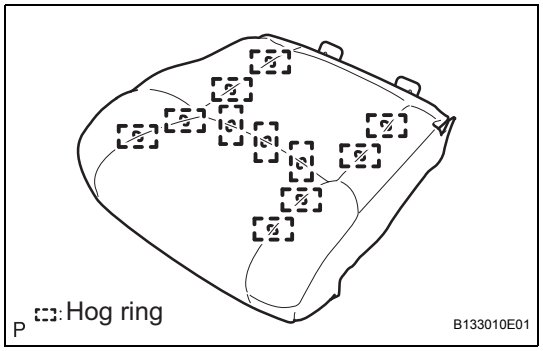

12. REMOVE SEPARATE TYPE FRONT SEAT CUSHION COVER

(a) Remove the 11 hog rings and the separate type front seat cushion cover.

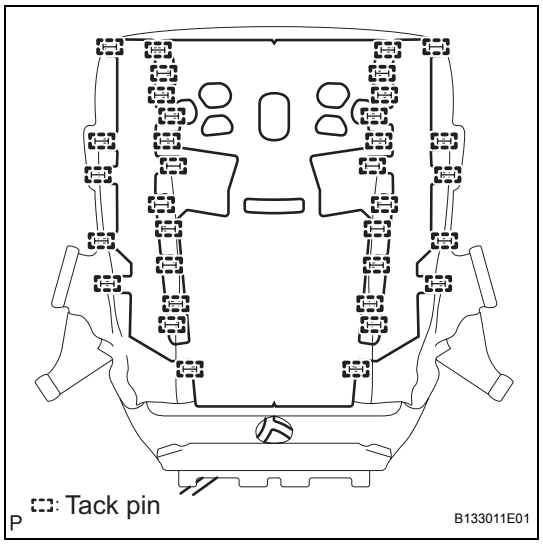

13. REMOVE FRONT SEAT CUSHION HEATER ASSEMBLY LH

(a) Detach the 34 tack pins and remove the front seat cushion heater assembly LH.

14. REMOVE FRONT SEAT HEADREST ASSEMBLY

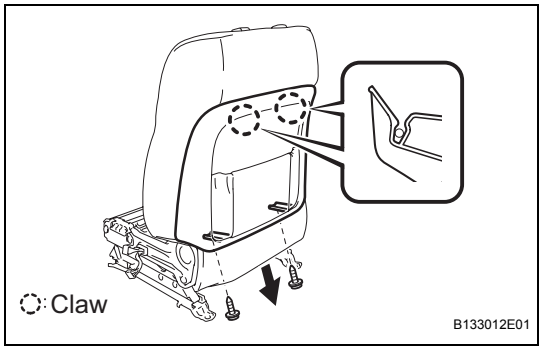

15. REMOVE FRONT SEATBACK BOARD SUB-ASSEMBLY LH

(a) Remove the 2 screws.

(b) Disengage the 2 claws and remove the front seatback board sub-assembly LH.

SE

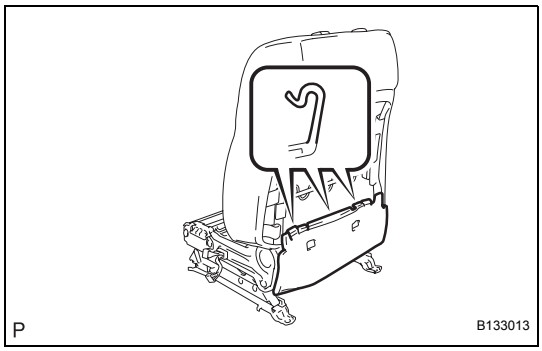

16. REMOVE SEPARATE TYPE FRONT SEATBACK COVER

(a) Disengage the hooks and remove the separate type front seatback cover.

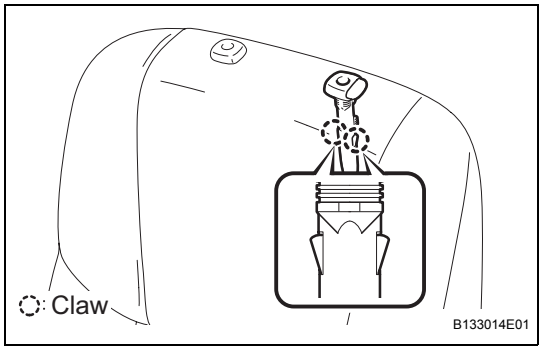

17. REMOVE FRONT SEAT HEADREST SUPPORT

(a) Disengage the 2 claws and remove the front seat headrest support (LH side).

18. REMOVE FRONT SEAT HEADREST SUPPORT

HINT:

Use the same procedures for the RH side and LH side.

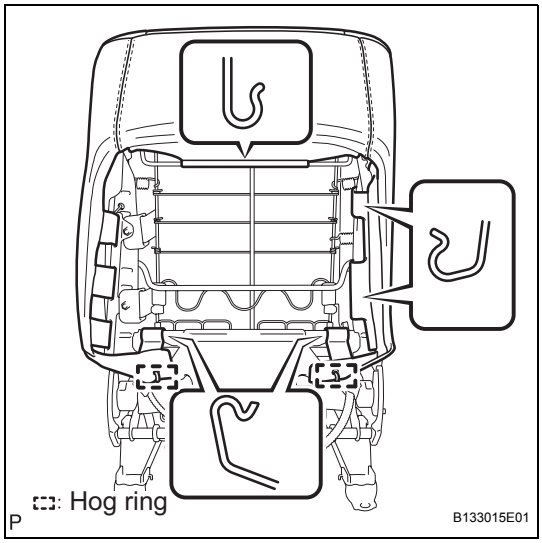

19. REMOVE SEATBACK COVER WITH PAD

(a) Disengage the 2 hog rings and the hooks.

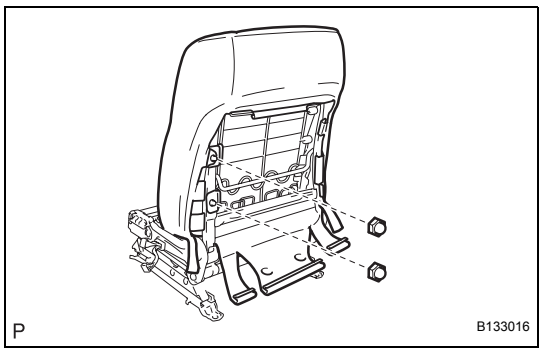

(b) Remove the 2 nuts and disconnect the separate type front seatback cover bracket.

(c) Remove the seatback cover with pad.

SE

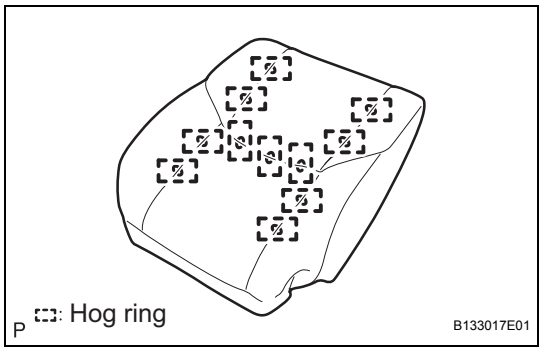

20. REMOVE SEPARATE TYPE FRONT SEATBACK COVER

(a) Remove the 11 hog rings and the separate type front seatback cover.

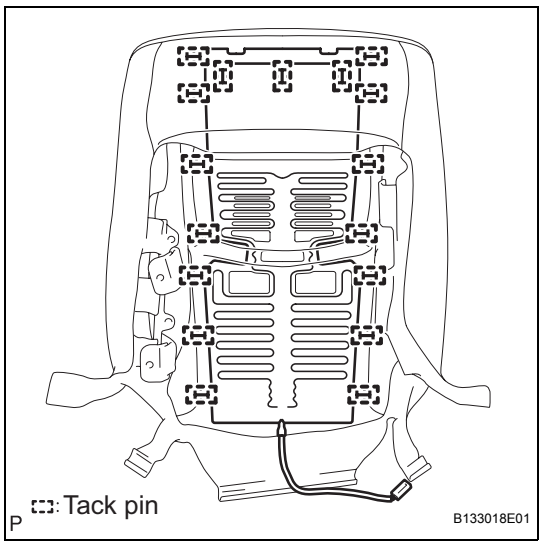

21. REMOVE FRONT SEATBACK HEATER ASSEMBLY LH (w/ Seat Heater System)

(a) Detach the 17 tack pins and remove the front seatback heater assembly LH.

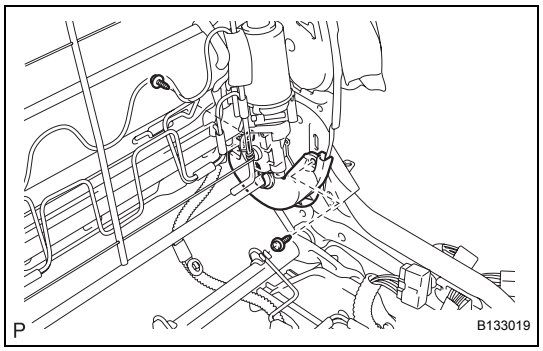

22. REMOVE FRONT SEATBACK SHIELD RH

(a) Remove the 2 screws and the front seatback shield RH.

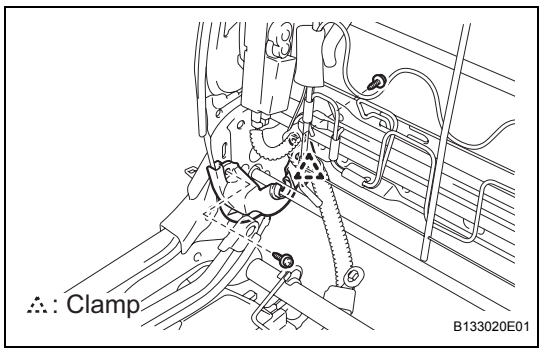

23. REMOVE FRONT SEATBACK SHIELD LH

(a) Disengage the clamp.

(b) Remove the 2 screws and the front seatback shield LH.

SE

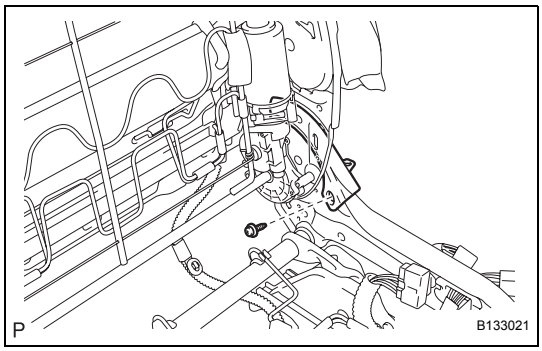

24. REMOVE RECLINING ADJUSTER INSIDE COVER RH

(a) Remove the screw and the reclining adjuster inside cover RH.

25. REMOVE RECLINING ADJUSTER INSIDE COVER LH

HINT:

Use the same procedures for the RH side and LH side.

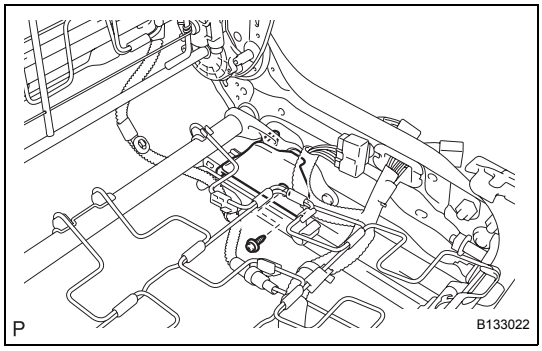

26. REMOVE FRONT SEAT CUSHION SHIELD LOWER LH (for Driver Seat)

(a) Remove the screw and the front seat cushion shield lower LH.

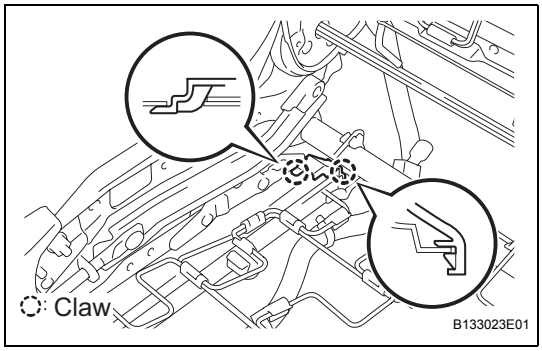

27. REMOVE VERTICAL ADJUSTER BRACKET COVER LH (for Front Passenger Seat)

(a) Disengage the 2 claws and remove the vertical adjuster bracket cover LH.

28. REMOVE FRONT SEAT CUSHION SHIELD LOWER (for Driver Seat)

HINT:

Use the same procedures for the RH side and LH side.

29. REMOVE VERTICAL ADJUSTER BRACKET COVER OUTER (for Front Passenger Seat)

HINT:

Use the same procedures for the RH side and LH side.

SE

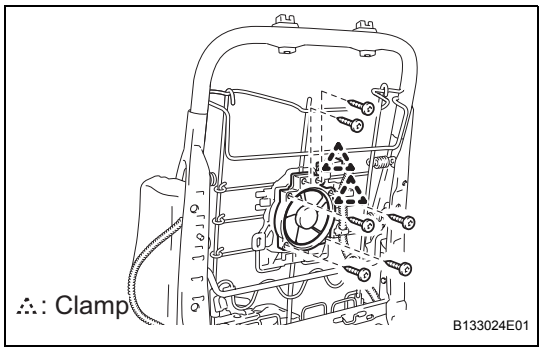

30. REMOVE SEAT CLIMATE CONTROL BLOWER RH (w/ Climate Control Seat System)

(a) Disconnect the connector.

(b) Disengage the 2 clamps.

(c) Using a torx socket wrench (T20), remove the 6 screws, seat climate control blower RH and seatback climate control cover.

31. REMOVE SEATBACK CLIMATE CONTROL COVER RH (w/ Climate Control Seat System)

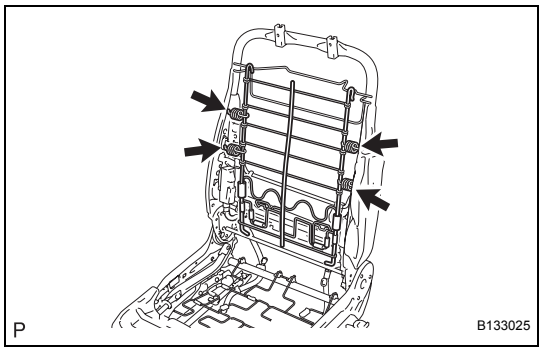

32. REMOVE LUMBAR SUPPORT ADJUSTER ASSEMBLY LH (for Driver Seat)

(a) Remove the 4 springs and the seatback spring.

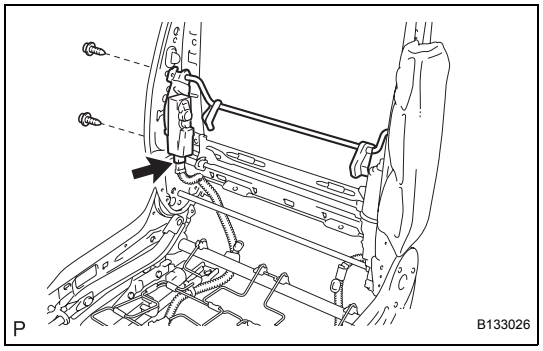

(b) Disconnect the connector.

(c) Remove the 2 screws and the lumbar support adjuster assembly LH.

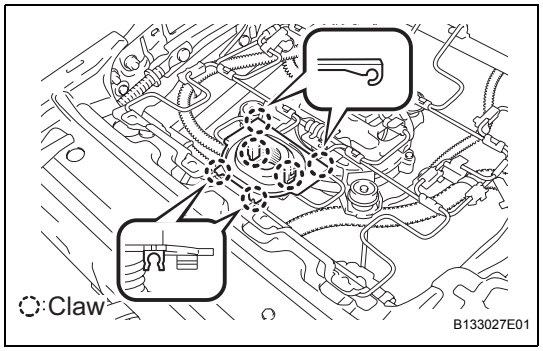

33. REMOVE SEAT CUSHION CLIMATE CONTROL DUCT RH (w/ Climate Control Seat System)

(a) Disengage the 6 claws and remove the seat cushion climate control duct.

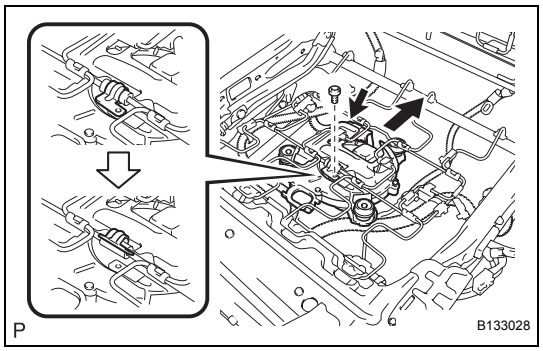

34. REMOVE SEAT CLIMATE CONTROL BLOWER (w/ Climate Control Seat System)

(a) Disconnect the connector.

(b) Using a torx socket wrench (T20), remove the screw and the seat climate control blower RH.

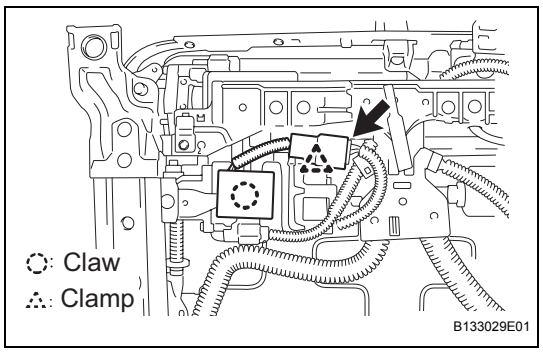

35. REMOVE SEAT HEATER CONTROL SUB-ASSEMBLY LH (w/ Seat Heater System)

(a) Disconnect the connector.

(b) Disengage the claw and clamp and remove the seat heater control sub-assembly LH.

36. REMOVE SEAT SLIDE POSITION SENSOR PROTECTOR (for Driver Seat) (See page RS-368)

37. REMOVE SEAT POSITION AIRBAG SENSOR (for Driver Seat) (See page RS-368)

SE

38. **REMOVE OCCUPANT CLASSIFICATION ECU (for Front Passenger Seat) (See page RS-371)**

39. **REMOVE FRONT SEAT WIRE LH**

REASSEMBLY

1. **INSTALL OCCUPANT CLASSIFICATION ECU (for Front Passenger Seat) (See page RS-371)**
2. **INSTALL SEAT POSITION AIRBAG SENSOR (for Driver Seat) (See page RS-368)**
3. **INSTALL FRONT SEATBACK HEATER ASSEMBLY LH (w/ Seat Heater System)**
   (a) Set the front seat back heater assembly LH to the separate type front seatback cover.
   (b) Install the front seat back heater assembly LH with 17 new tack pins.

a - a:

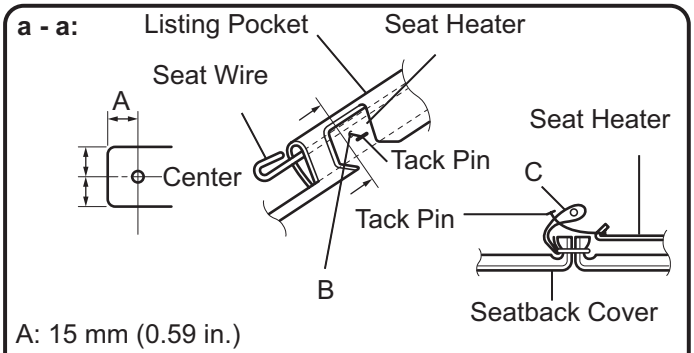

A: 15 mm (0.59 in.)

B: Install the tack pins under the wire.

C: Align the seat heater and the end of the listing pocket.

b - b:

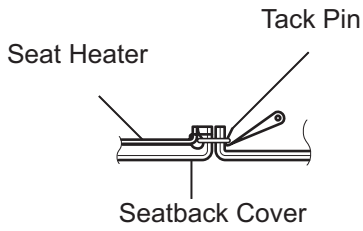

Tack pins should not be beyond the seam.

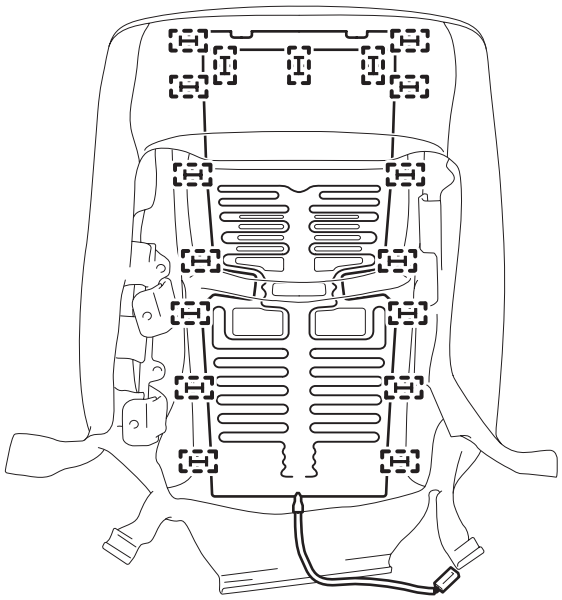

P : Tack pin

B133030E02

NOTICE:
Do not substitute other metal parts for tack pins.

SE

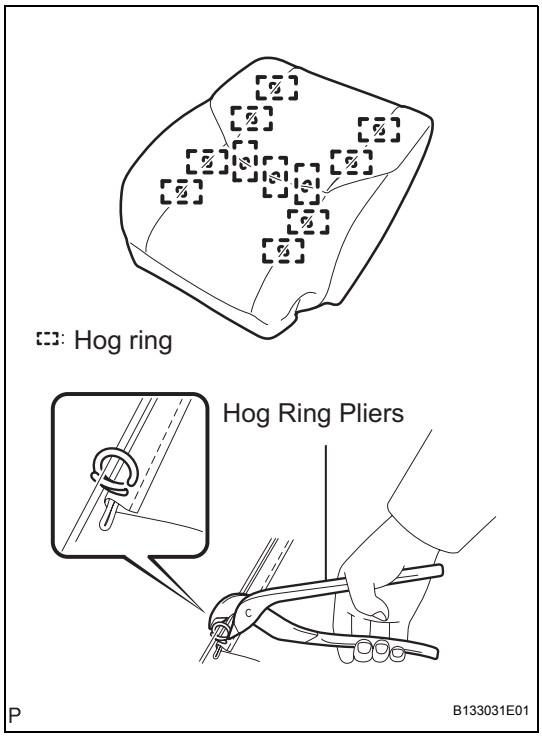

4. INSTALL SEPARATE TYPE FRONT SEATBACK COVER

(a) Using hog ring pliers, install the separate type front seatback cover with 11 new hog rings.
NOTICE:
- **Be careful not to damage the cover.**
- **When installing the hog rings, take care to minimize wrinkles as much as possible.**

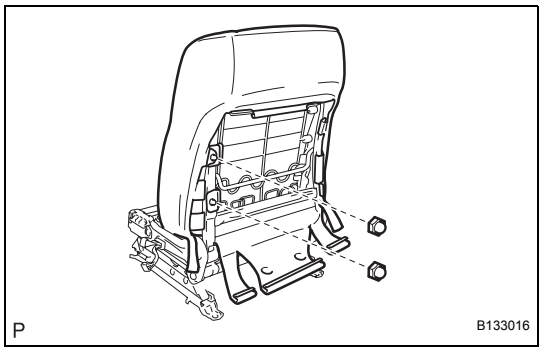

5. INSTALL SEATBACK COVER WITH PAD

(a) Install the seatback cover with pad.

(b) Install the separate type front seatback cover bracket with the 2 nuts.
Torque: 5.5 N*m (56 kgf*cm, 49 in.*lbf)

SE

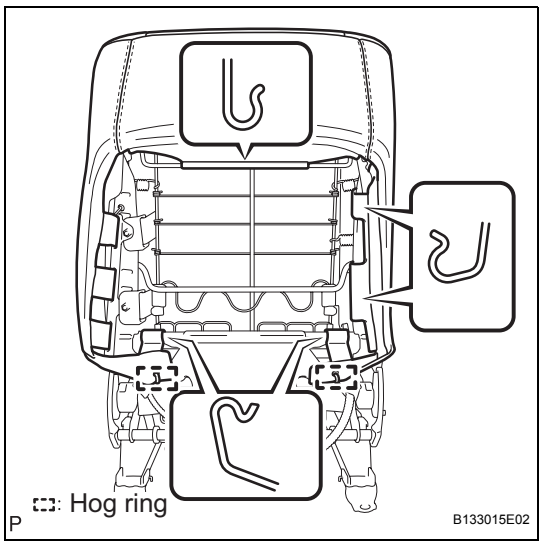

(c) Using hog ring pliers, install the separate type front seatback cover with 2 new hog rings.
NOTICE:
- **Be careful not to damage the cover.**
- **When installing the hog rings, take care to minimize wrinkles as much as possible.**

(d) Engage the hooks.

6. INSTALL FRONT SEAT CUSHION HEATER ASSEMBLY LH (w/ Seat Heater System)

(a) Set the front seat cushion heater assembly LH to the separate type front seat cushion cover.

(b) Install the front seat cushion heater assembly LH with 34 new tack pins.

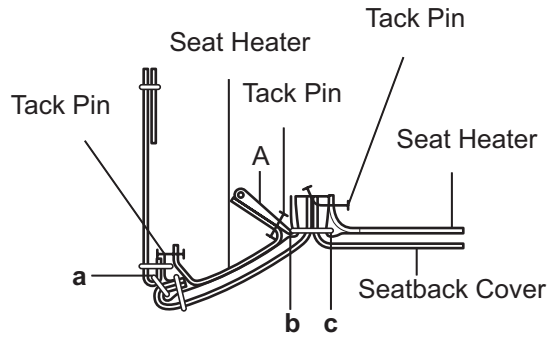

a, c:

Tack pins should not be beyond the seam.

b:

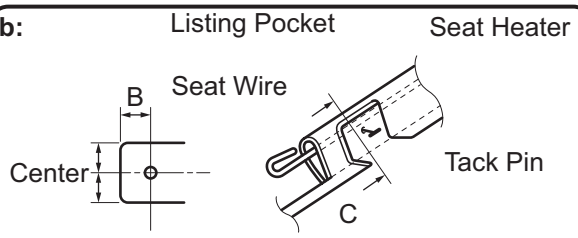

A: Install the tack pins under the wire.

B: 15 mm (0.59 in.)

C: Align the seat heater and the end of the listing pocket.

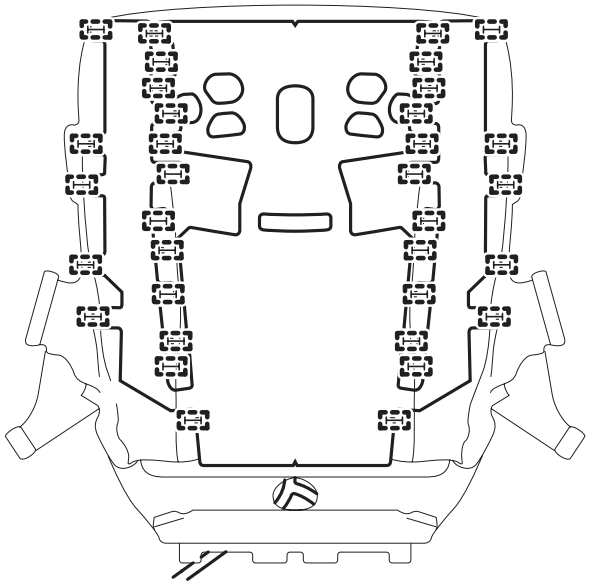

: Tack Pin

P

B133032E01

SE

NOTICE:
Do not substitute other metal parts for tack pins.

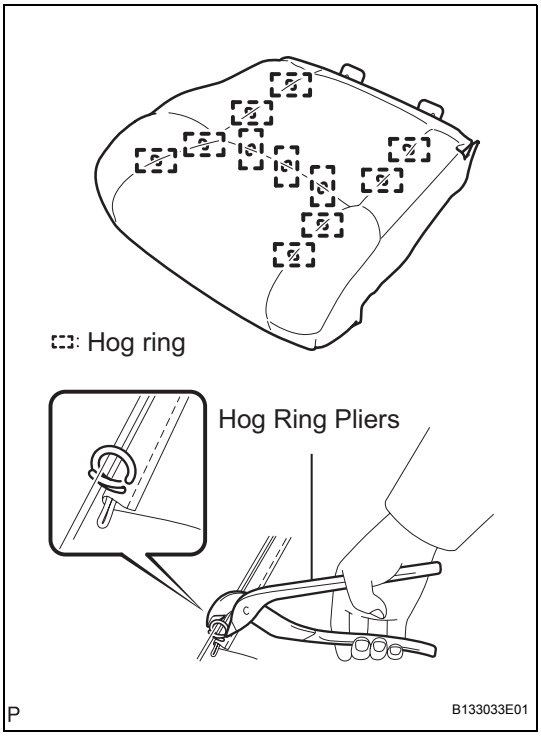

7. **INSTALL SEPARATE TYPE FRONT SEAT CUSHION COVER**
   (a) Using hog ring pliers, install the separate type front seat cushion cover with 11 new hog rings.
   NOTICE:
   - **Be careful not to damage the cover.**
   - **When installing the hog rings, take care to minimize wrinkles as much as possible.**

8. **INSTALL FRONT SEAT INNER BELT ASSEMBLY LH**

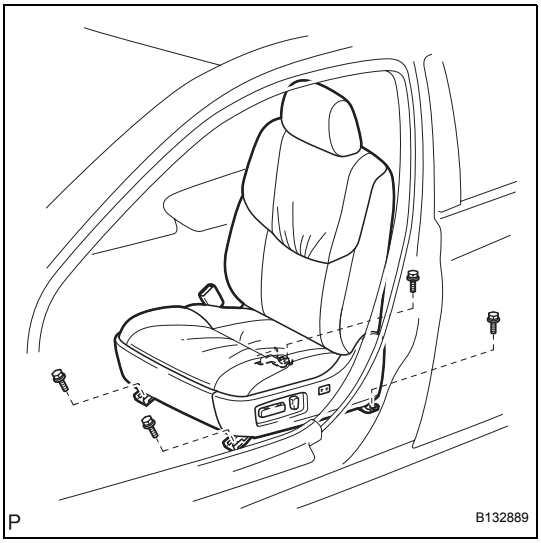

INSTALLATION

1. **INSTALL FRONT LH SEAT ASSEMBLY**
   (a) Connect the connectors.
   (b) Connect the negative battery terminal.
   (c) Move the front LH seat assembly to the rearmost position by operating the slide & vertical power seat switch knob.
   (d) Tighten the 2 bolts on the front side of the front LH seat assembly.
   Torque: 37 N*m (377 kgf*cm, 27 ft.*lbf)
   (e) Move the front LH seat assembly fully forward by operating the slide & vertical power seat switch knob.
   (f) Tighten the 2 bolts on the rear side of the front LH seat assembly.
   Torque: 37 N*m (377 kgf*cm, 27 ft.*lbf)

2. **PERFORM SYSTEM INITIALIZE**
   HINT:
   See page IN-29

3. **INSPECT POWER SEAT CONTROL SYSTEM**
   HINT:
   See page SE-13

4. **CHECK SEAT HEATER SYSTEM (w/ Seat Heater System)**
   HINT:
   See page SE-33

SE

5. **INITIALIZE FRONT PASSENGER OCCUPANT CLASSIFICATION SYSTEM (for Front Passenger Seat)**
   HINT:
   See page RS-206

6. **INSPECT SRS WARNING LIGHT**
   HINT:
   See page RS-28

REAR SEAT ASSEMBLY

COMPONENTS

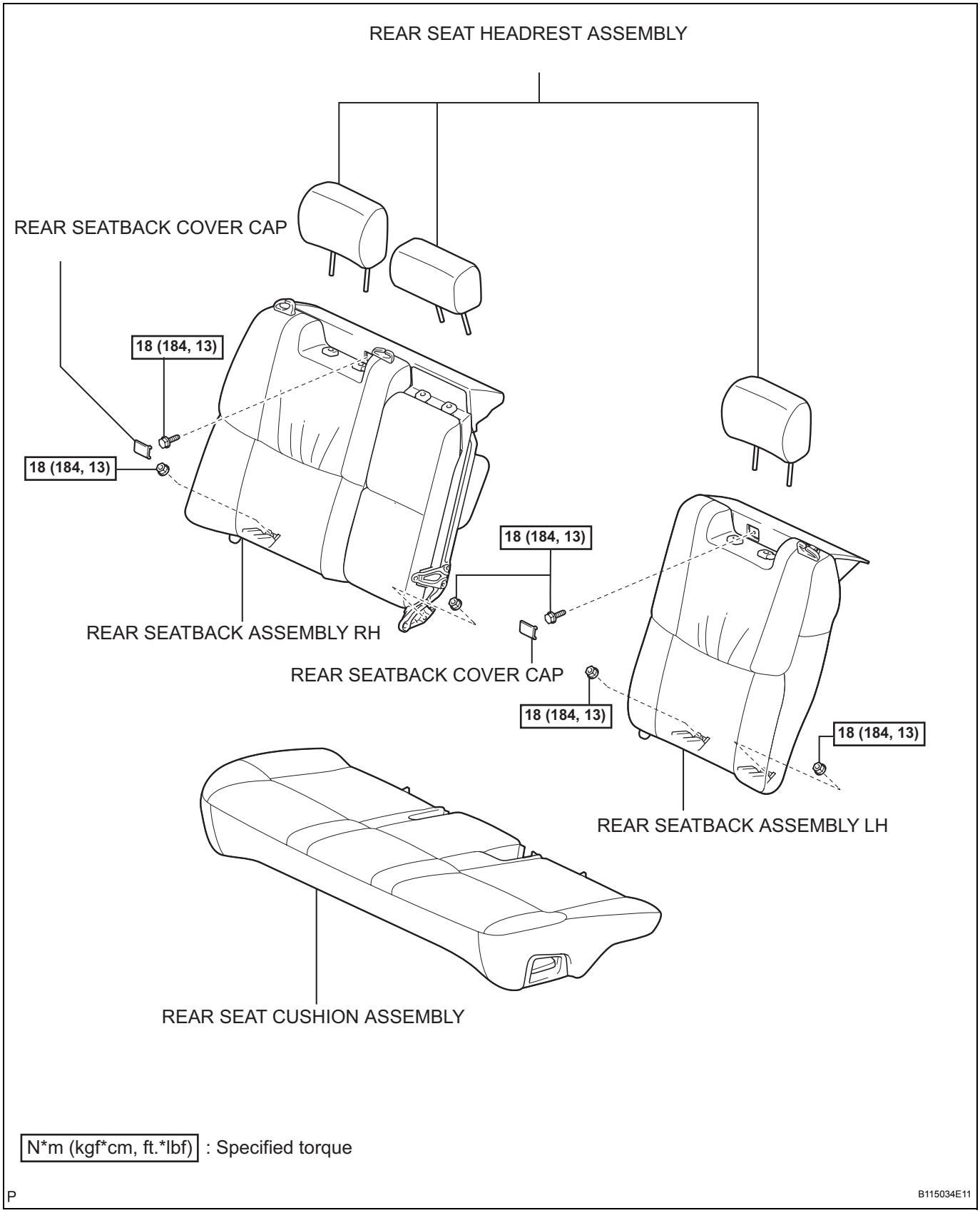

SE

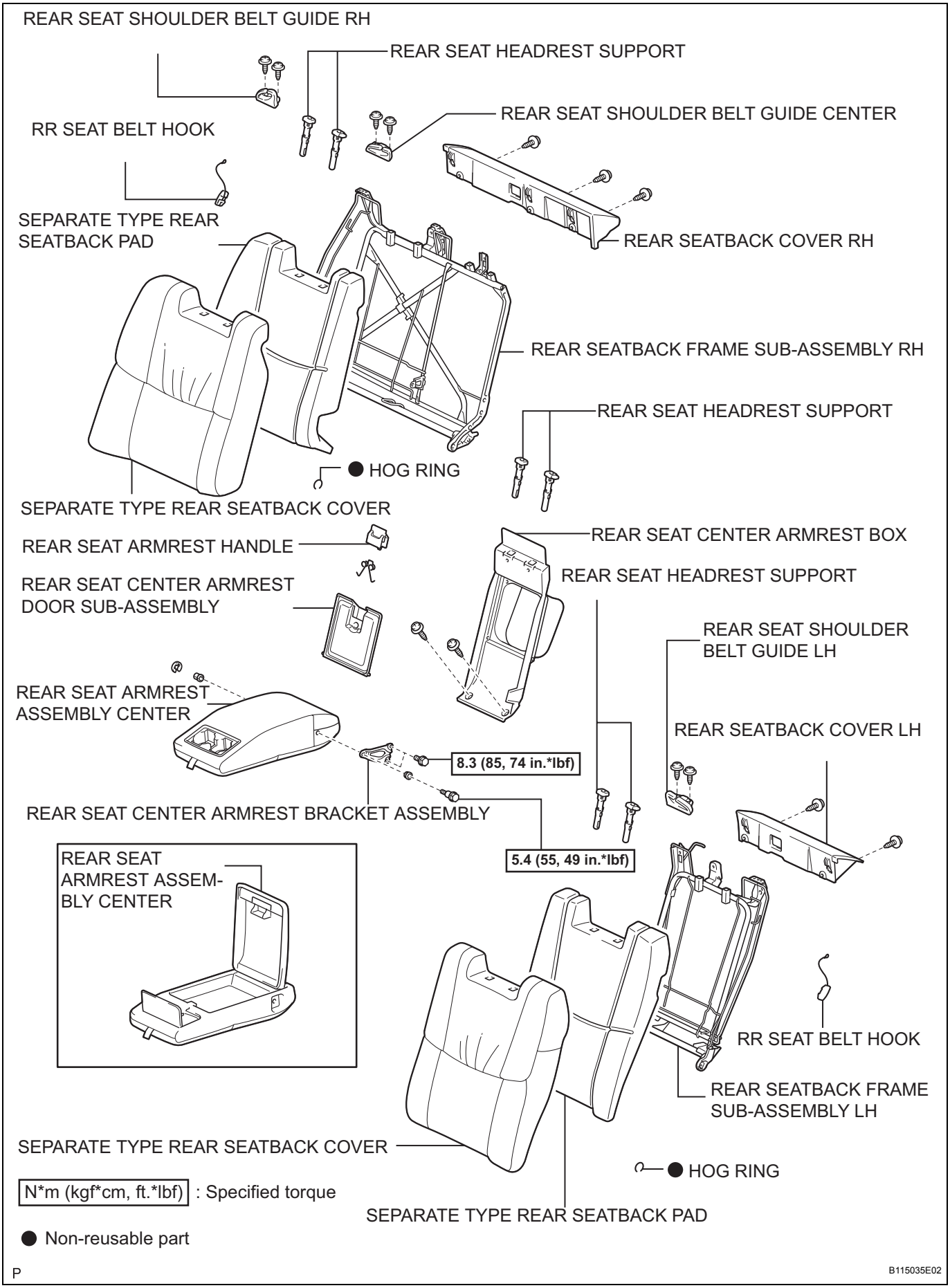
REAR SEAT SHOULDER BELT GUIDE RH
REAR SEAT HEADREST SUPPORT
REAR SEAT SHOULDER BELT GUIDE CENTER
RR SEAT BELT HOOK
SEPARATE TYPE REAR SEATBACK PAD
REAR SEATBACK COVER RH
REAR SEATBACK FRAME SUB-ASSEMBLY RH
REAR SEAT HEADREST SUPPORT
● HOG RING
SEPARATE TYPE REAR SEATBACK COVER
REAR SEAT ARMREST HANDLE
REAR SEAT CENTER ARMREST BOX
REAR SEAT HEADREST SUPPORT
REAR SEAT CENTER ARMREST DOOR SUB-ASSEMBLY
REAR SEAT SHOULDER BELT GUIDE LH
REAR SEAT ARMREST ASSEMBLY CENTER
REAR SEATBACK COVER LH
8.3 (85, 74 in.*lbf)
REAR SEAT CENTER ARMREST BRACKET ASSEMBLY
5.4 (55, 49 in.*lbf)
REAR SEAT ARMREST ASSEMBLY CENTER
RR SEAT BELT HOOK
REAR SEATBACK FRAME SUB-ASSEMBLY LH
SEPARATE TYPE REAR SEATBACK COVER
● HOG RING
N*m (kgf*cm, ft.*lbf) : Specified torque
SEPARATE TYPE REAR SEATBACK PAD
● Non-reusable part
P
B115035E02

SE

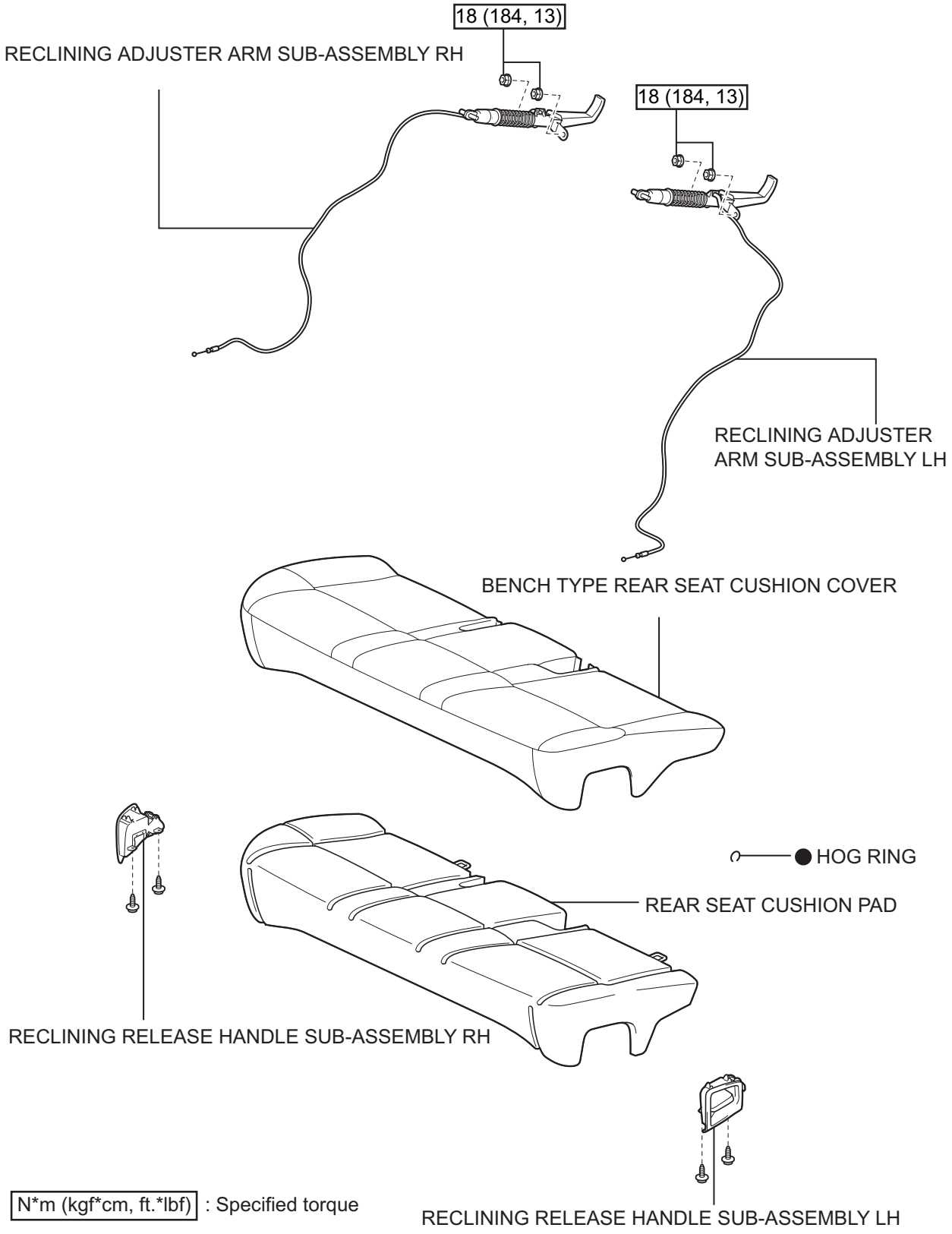
18 (184, 13)
RECLINING ADJUSTER ARM SUB-ASSEMBLY RH
18 (184, 13)
RECLINING ADJUSTER ARM SUB-ASSEMBLY LH
BENCH TYPE REAR SEAT CUSHION COVER
HOG RING
REAR SEAT CUSHION PAD
RECLINING RELEASE HANDLE SUB-ASSEMBLY RH
RECLINING RELEASE HANDLE SUB-ASSEMBLY LH
N*m (kgf*cm, ft.*lbf) : Specified torque
Non-reusable part
P
B115036E01

SE

REMOVAL

HINT:
Only installation procedures requiring additional information are included.

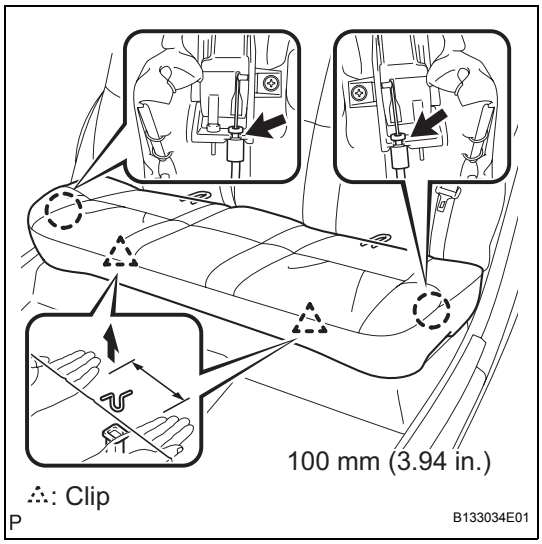

1. REMOVE REAR SEAT CUSHION ASSEMBLY

(a) Pull up the 2 portions of the rear seat cushion assembly as shown in the illustration and remove it.
A:
100 mm (3.94 in.) or less
NOTICE:
In this case, hold the base of the clip up to prevent the cushion frame from being distorted.

(b) Disconnect each wire of the reclining adjuster arm sub-assembly RH and remove the rear seat cushion assembly.

2. REMOVE REAR SEAT HEADREST ASSEMBLY

3. REMOVE REAR SEATBACK LOCK COVER CAP

(a) Disengage the 6 claws and remove the 2 RR shelf cover caps.

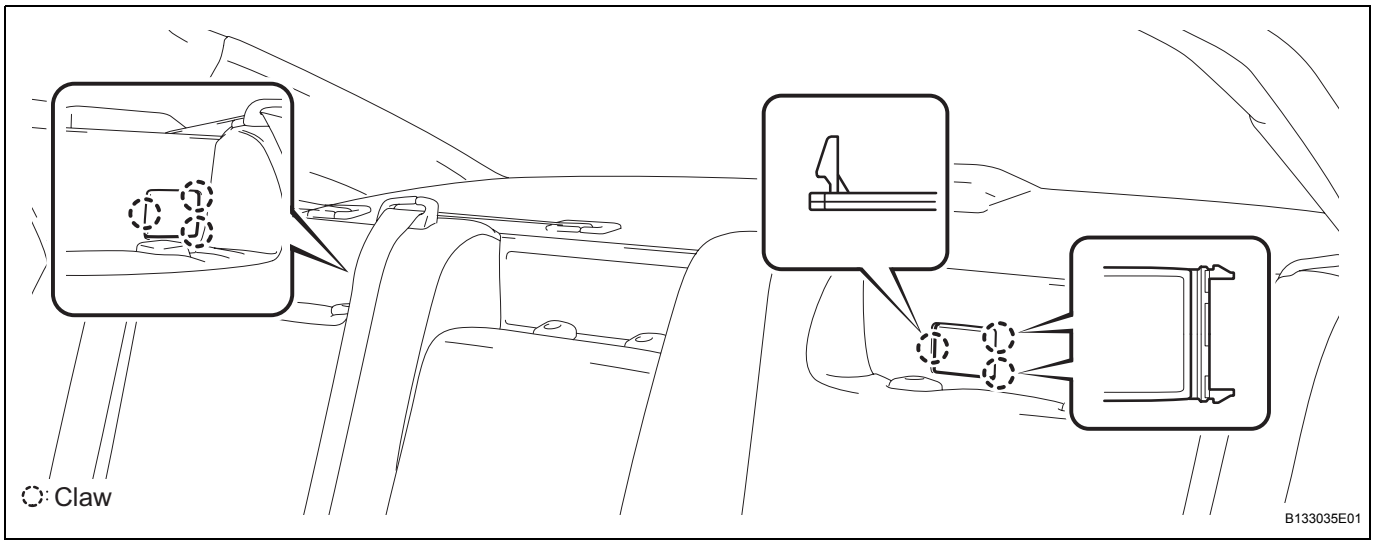

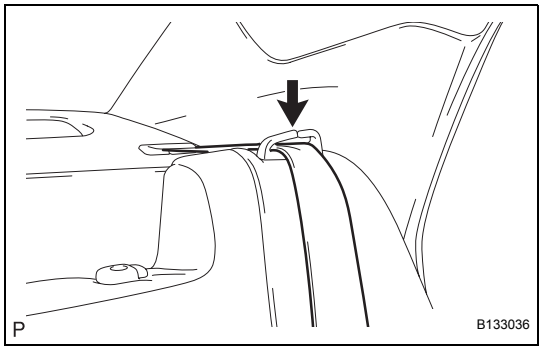

4. REMOVE REAR SEATBACK ASSEMBLY LH

(a) Remove the rear seat belt from the rear seat shoulder belt guide LH.

SE

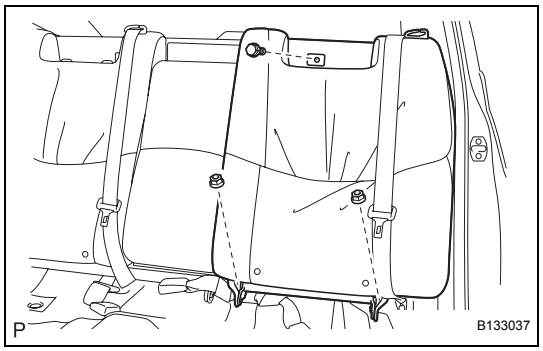

(b) Remove the bolt, 2 nuts and the rear seatback assembly LH.

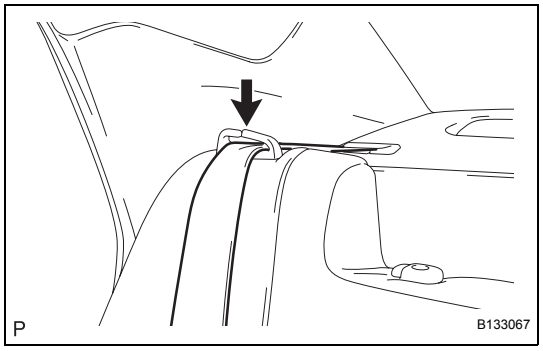

5. REMOVE REAR SEATBACK ASSEMBLY RH

(a) Remove the rear seat belt from the rear seat shoulder belt guide RH.

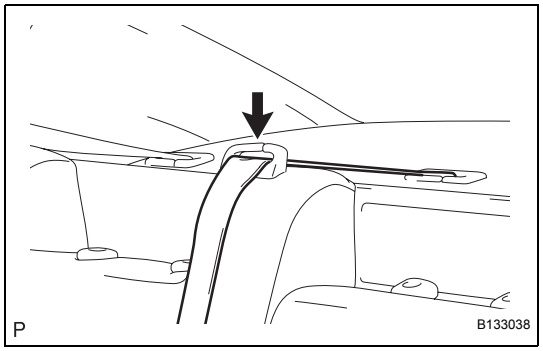

(b) Remove the rear seat belt from the rear seat shoulder belt guide center.

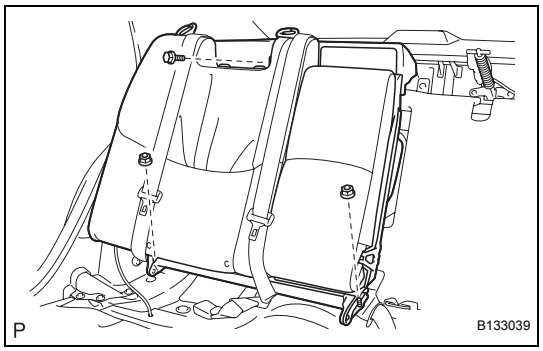

(c) Remove the bolt, 2 nuts and the rear seatback assembly RH.

SE

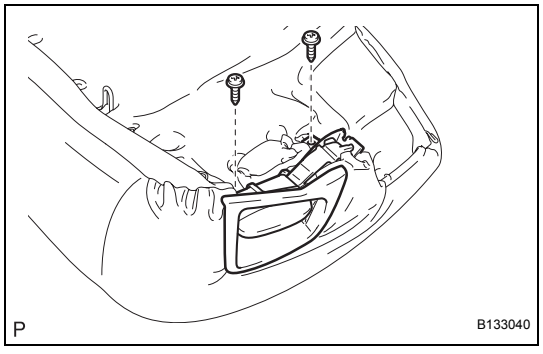

DISASSEMBLY

1. REMOVE RECLINING RELEASE HANDLE SUB-ASSEMBLY LH

(a) Remove the 2 screws and the reclining release handle sub-assembly LH.

2. REMOVE RECLINING RELEASE HANDLE SUB-ASSEMBLY RH

HINT:

Use the same procedures for the RH side and LH side.

3. REMOVE BENCH TYPE REAR SEAT CUSHION COVER

(a) Remove the 47 hog rings.

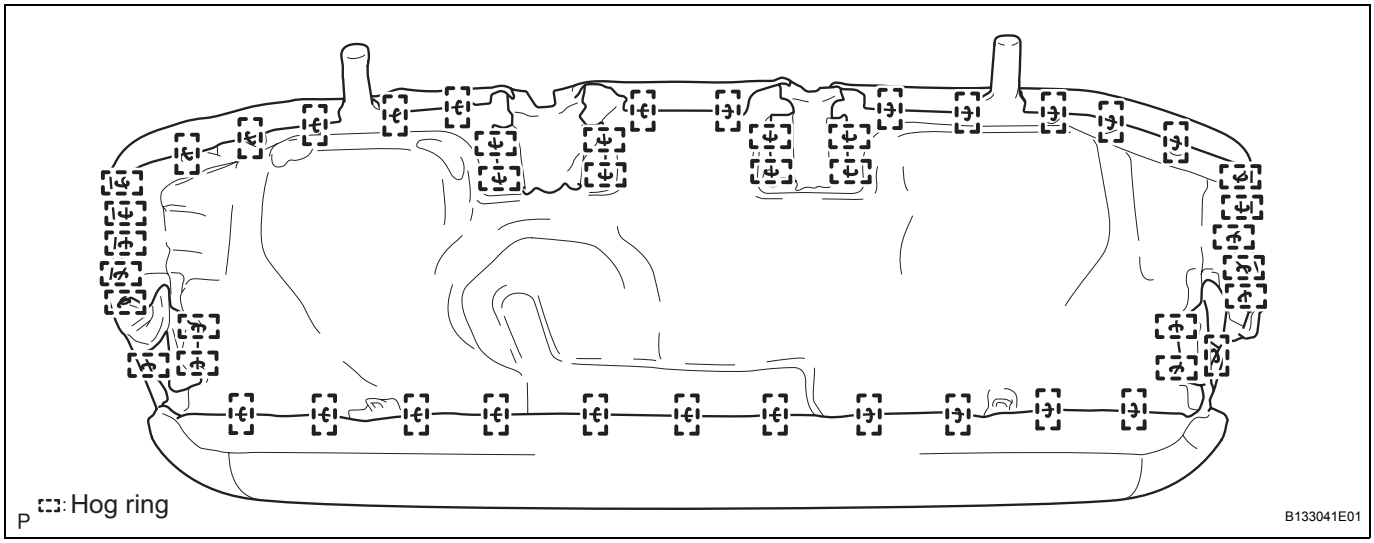

(b) Remove the 18 hog rings and the bench type rear seat cushion cover.

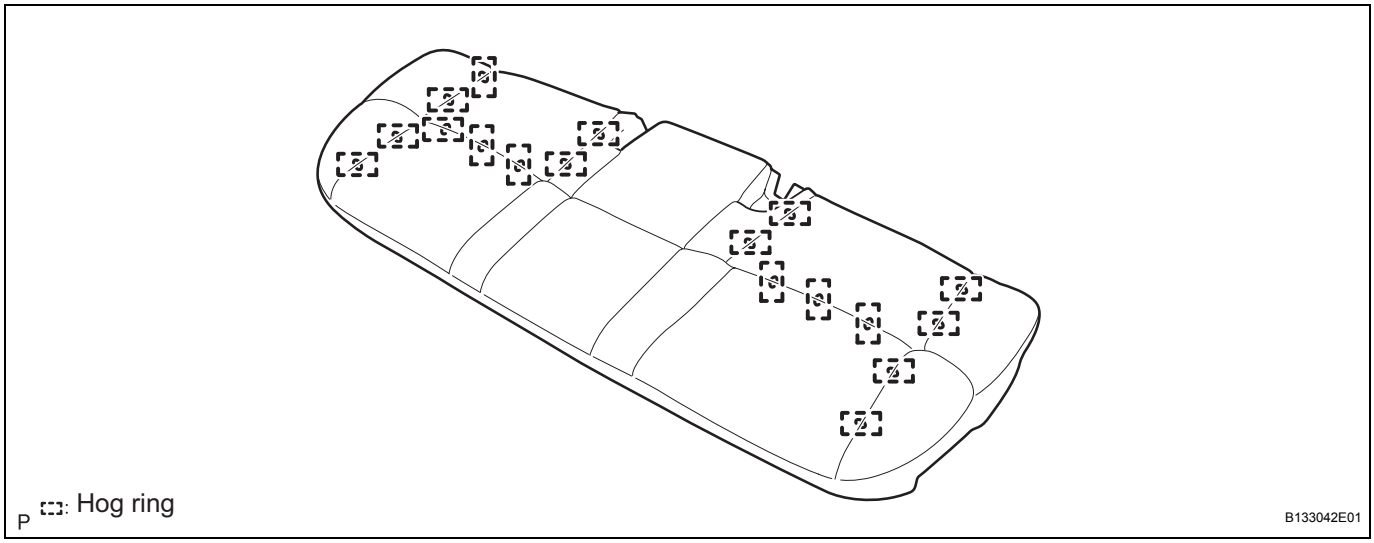

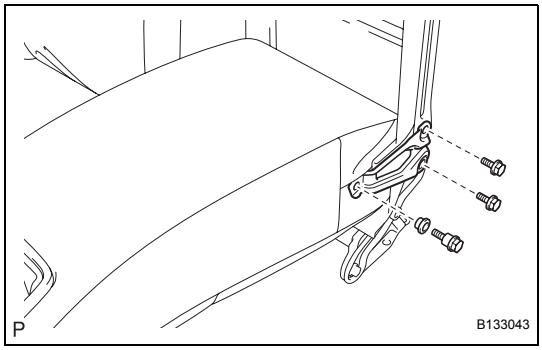

4. REMOVE BRACKET

(a) Remove the 3 bolts, E-ring and the rear seat center armrest bracket LH.

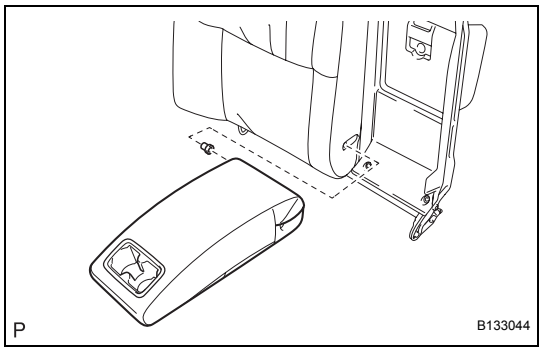

5. REMOVE REAR SEAT ARMREST ASSEMBLY CENTER

(a) Remove the rear seat armrest assembly center.

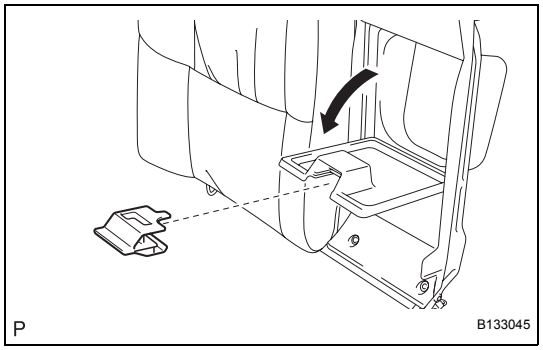

6. REMOVE REAR SEAT ARMREST HANDLE

(a) Open the rear seat center armrest door sub-assembly as shown in the illustration.

(b) Remove the ring and remove the rear seat armrest handle and spring as a unit.

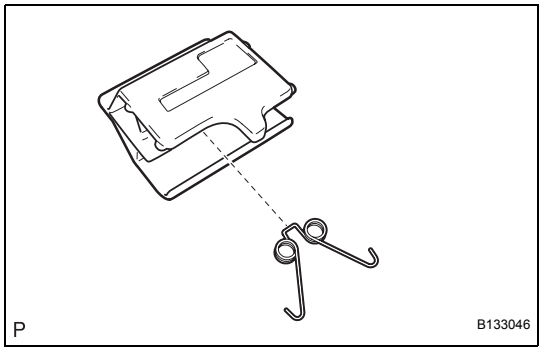

(c) Remove the rear seat armrest handle.

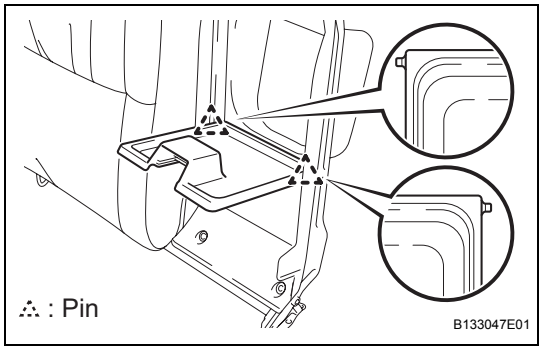

7. REMOVE REAR SEAT CENTER ARMREST DOOR SUB-ASSEMBLY

(a) Disengage the RH side pin.

(b) Disengage the LH side pin and remove the rear seat center armrest door sub-assembly.

8. REMOVE REAR SEAT HEADREST SUPPORT

(a) Disengage the 6 claws and remove the 3 rear seat headrest supports (LH side).

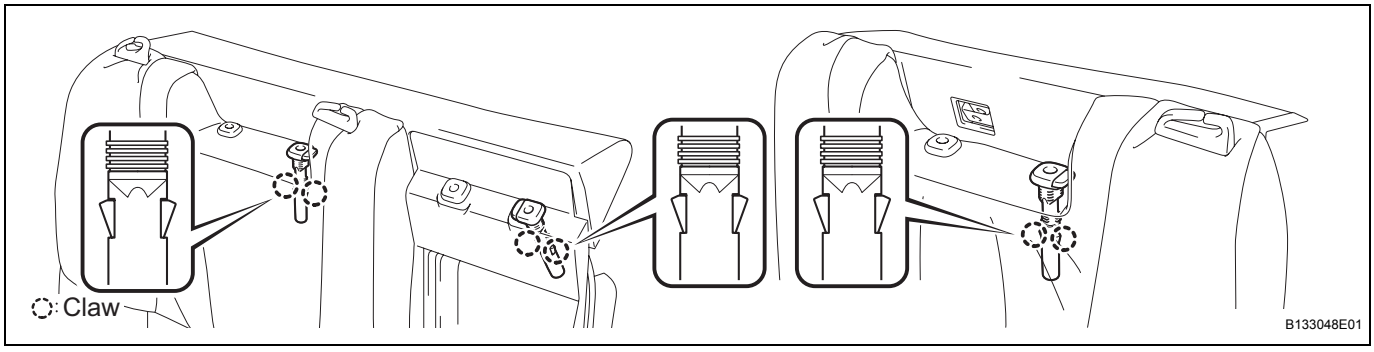

SE

9. REMOVE REAR SEAT HEADREST SUPPORT

HINT:

Use the same procedures for the RH side and LH side.

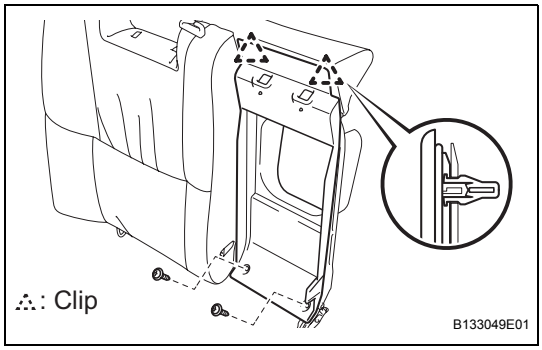

10. REMOVE REAR SEAT CENTER ARMREST BOX

(a) Remove the 2 screws.

(b) Disengage the 2 clips and remove the rear seat center armrest box.

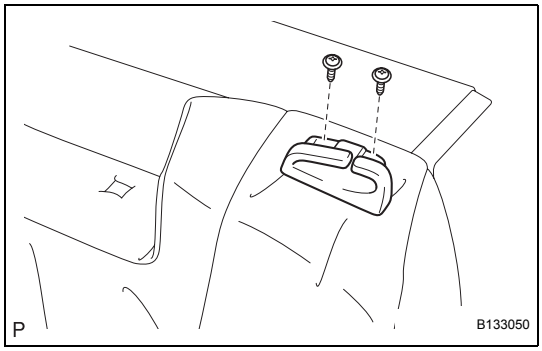

11. REMOVE REAR SEAT SHOULDER BELT GUIDE LH

(a) Remove the 2 screws and the rear seat shoulder belt guide LH.

12. REMOVE REAR SEAT SHOULDER BELT GUIDE RH

HINT:

Use the same procedures for the RH side and LH side.

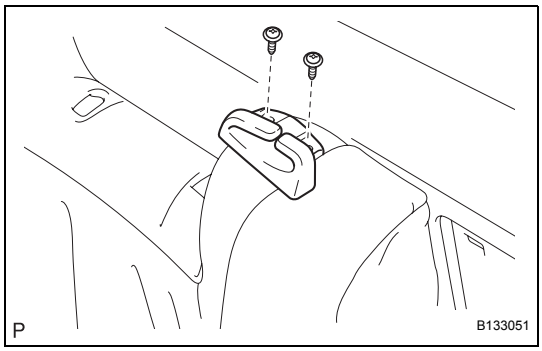

13. REMOVE REAR SEAT SHOULDER BELT GUIDE CENTER

(a) Remove the 2 screws and the rear seat shoulder belt guide center.

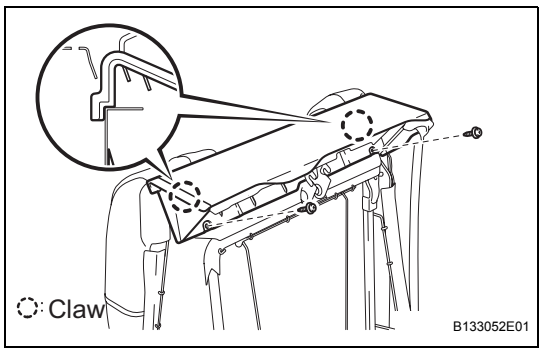

14. REMOVE REAR SEATBACK COVER LH

(a) Remove the 2 screws.

(b) Disengage the 2 claws and remove the rear seatback cover LH.

SE

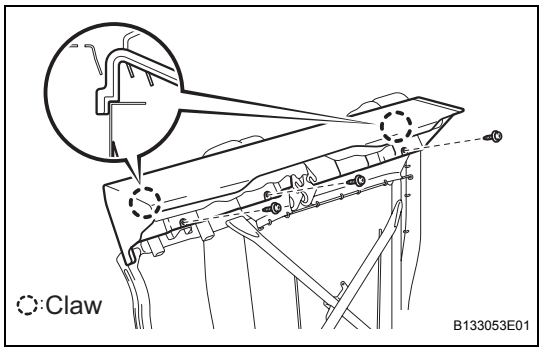

15. REMOVE REAR SEATBACK COVER RH

(a) Remove the 3 screws.

(b) Disengage the 2 claws and remove the rear seatback cover RH.

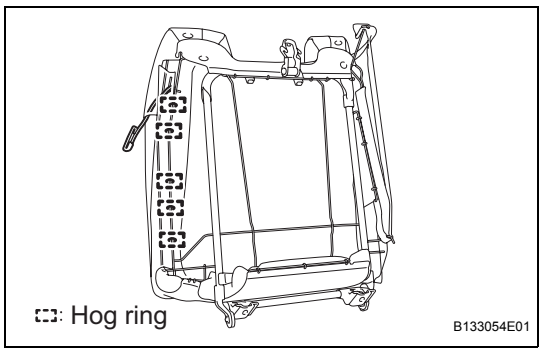

16. REMOVE RR SEAT BELT HOOK

(a) Remove the 5 hog rings and the RR seat belt hook.
HINT:
Use the same procedures for the RH side and LH side.

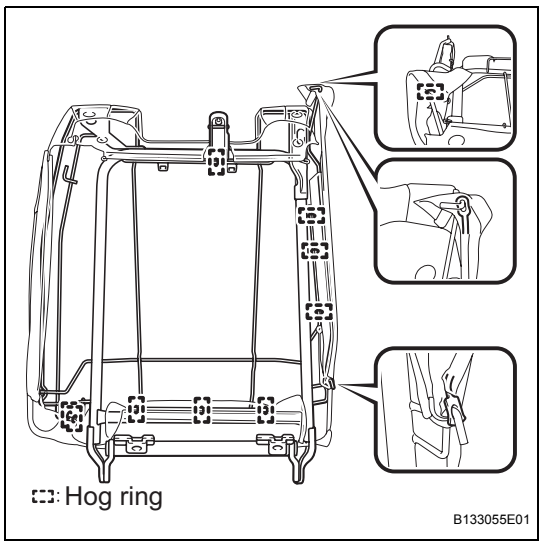

17. REMOVE REAR SEATBACK FRAME SUB-ASSEMBLY LH

(a) Disengage the 2 J-clips.

(b) Remove the 10 hog rings.

(c) Disengage the 2 hooks and remove the rear seatback frame sub-assembly LH.

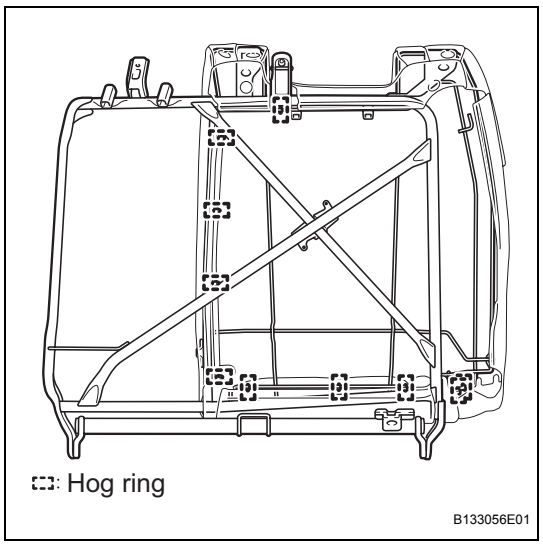

18. REMOVE REAR SEATBACK FRAME SUB-ASSEMBLY RH

(a) Disengage the 2 J-clips.

(b) Remove the 10 hog rings and the rear seatback frame sub-assembly RH.

SE

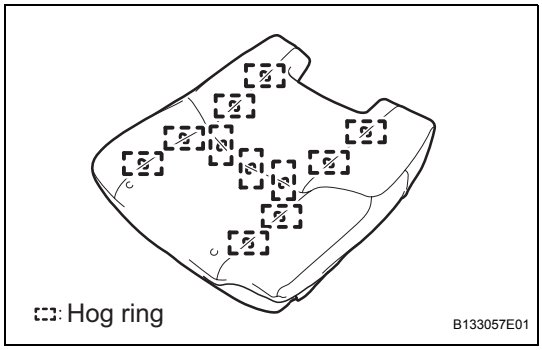

19. REMOVE SEPARATE TYPE REAR SEATBACK COVER

(a) Remove the 11 hog rings and the separate type rear seatback cover.

20. REMOVE SEPARATE TYPE REAR SEATBACK COVER

HINT:

Use the same procedures for the RH side and LH side.

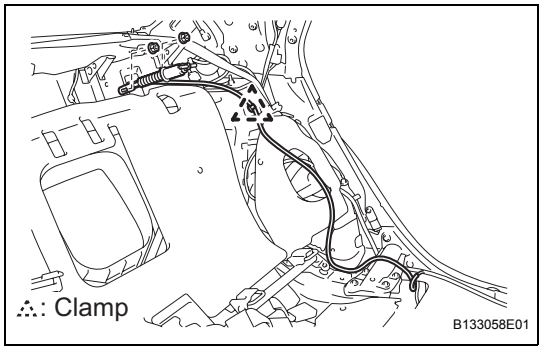

21. REMOVE UPPER NO.2 LH ARM SUB-ASSEMBLY NO.1 SEAT RECLINING ADJUSTER

(a) Disengage the clamp and remove the 2 nuts and the reclining adjuster arm sub-assembly LH.

22. REMOVE NO.1 SEAT RECLINING ADJUSTER ARM SUB-ASSEMBLY UPPER NO.2 RH

HINT:

Use the same procedures for the RH side and LH side.

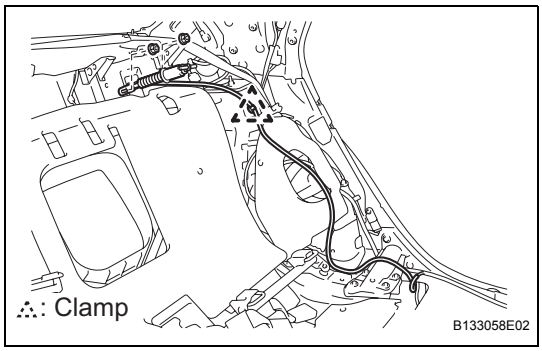

REASSEMBLY

1. INSTALL UPPER NO.2 LH ARM SUB-ASSEMBLY NO.1 SEAT RECLINING ADJUSTER

(a) Install the reclining adjuster arm sub-assembly LH with the 2 nuts.

Torque: 18 N*m (184 kgf*cm, 13 ft.*lbf)

(b) Engage the clamp.

2. INSTALL NO.1 SEAT RECLINING ADJUSTER ARM SUB-ASSEMBLY UPPER NO.2 RH

HINT:

Use the same procedures for the RH side and LH side.

3. INSTALL SEPARATE TYPE REAR SEATBACK COVER

(a) Using hog ring pliers, install the separate type rear seat back cover with 13 new hog rings.

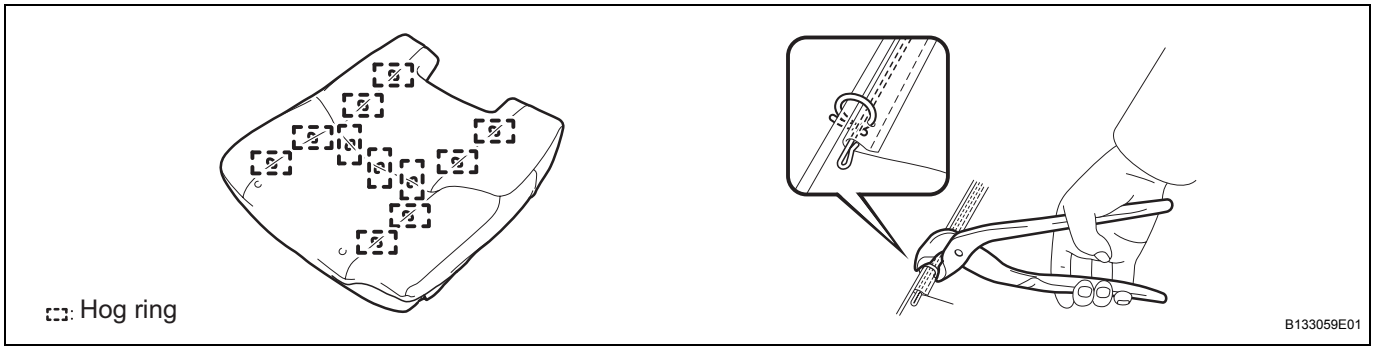

NOTICE:

- **Be careful not to damage the cover.**
- **When installing the hog rings, take care to minimize wrinkles as much as possible.**

SE

4. INSTALL SEPARATE TYPE REAR SEATBACK COVER

HINT:

Use the same procedures for the RH side and LH side.

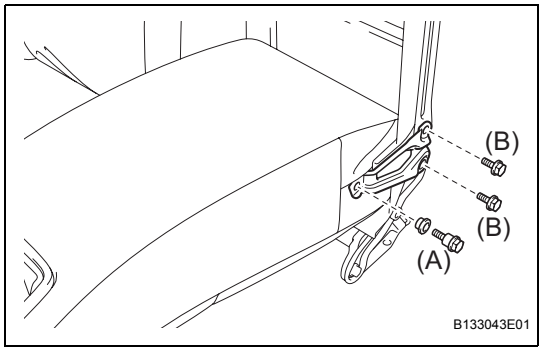

5. INSTALL BRACKET

(a) Install the rear seat center armrest bracket LH with the 3 bolts.

Torque: Bolt A

5.4 N*m (55 kgf*cm, 48 in.*lbf)

Bolt B

8.3 N*m (85 kgf*cm, 74 in.*lbf)

(b) Install the E-ring.

6. INSTALL BENCH TYPE REAR SEAT CUSHION COVER

(a) Using hog ring pliers, install the bench type rear seat cushion cover with 18 new hog rings.

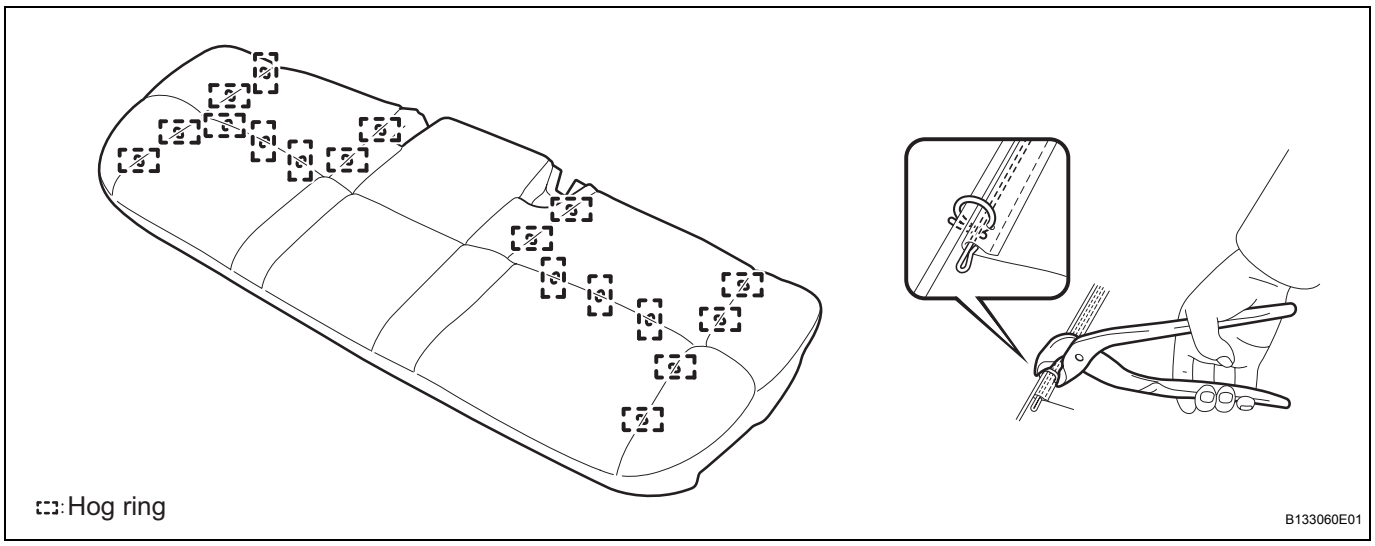

(b) Using hog ring pliers, install the bench type rear seat cover with 47 new hog rings.

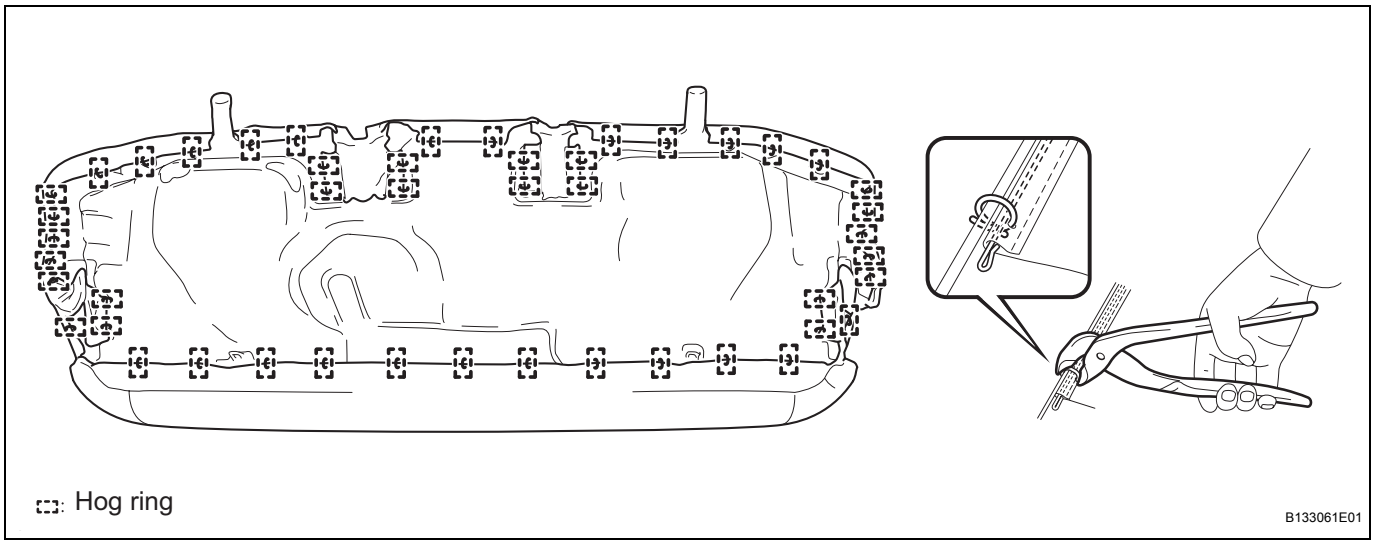

NOTICE:

- **Be careful not to damage the cover.**

- **When installing the hog rings, take care to minimize wrinkles as much as possible.**

INSTALLATION

1. INSTALL REAR SEATBACK ASSEMBLY RH

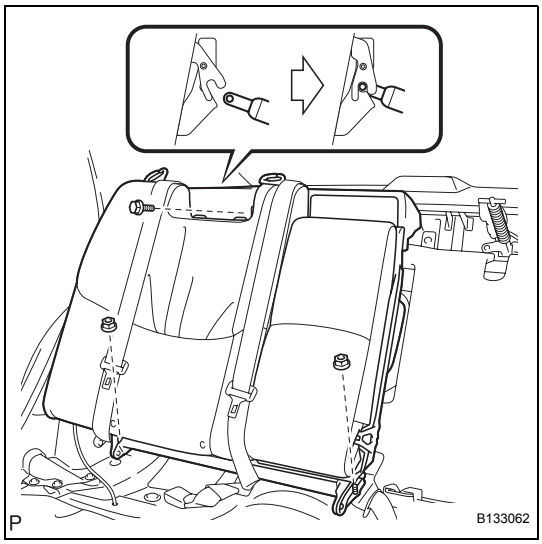

(a) Engage the rear seatback frame sub-assembly RH with the end of the reclining adjuster arm sub-assembly RH.

(b) Install the rear seatback assembly RH with the bolt and 2 nuts.

Torque: 18 N*m (184 kgf*cm, 13 ft.*lbf)

HINT:

Compress completely adjuster arm sub-assembly before engage rear seatback frame sub-assembly.

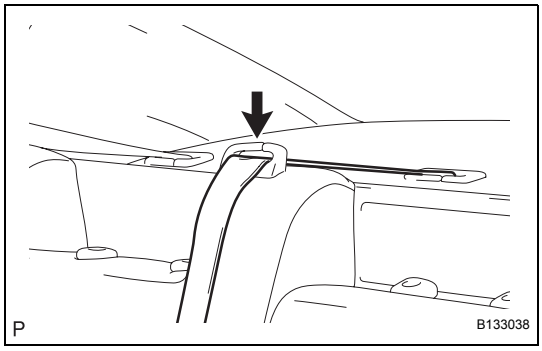

(c) Install the rear seat belt to the rear seat shoulder belt guide center.

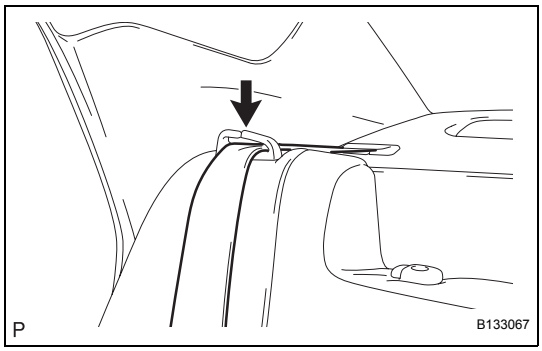

(d) Install the rear seat belt to the rear seat shoulder belt guide RH.

SE

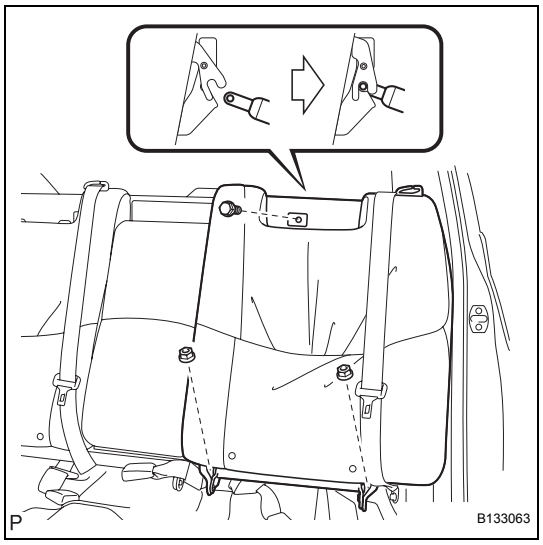

2. INSTALL REAR SEATBACK ASSEMBLY LH

(a) Engage the rear seatback frame sub-assembly LH with the end of the reclining adjuster arm sub-assembly LH.

(b) Install the rear seatback assembly LH with the bolt and 2 nuts.

Torque: 18 N*m (184 kgf*cm, 13 ft.*lbf)

HINT:

Compress completely adjuster arm sub-assembly before engage rear seatback frame sub-assembly.

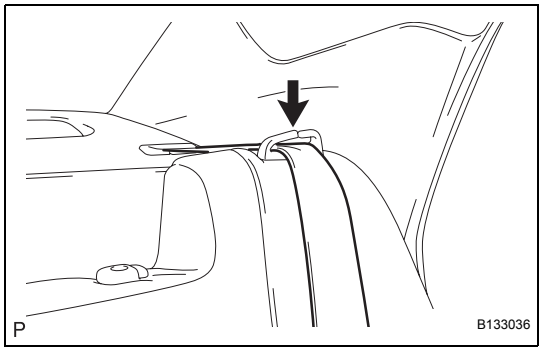

(c) Install the rear seat belt to the rear seat shoulder belt guide LH.

SE

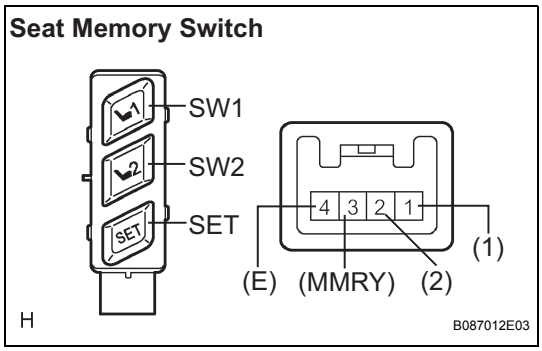

SEAT MEMORY SWITCH (w/ Memory)

INSPECTION

1. INSPECT SEAT MEMORY SWITCH

(a) Measure the resistance between the terminals when each switch is operated.

Resistance

Tester Connection	Switch Operation	Specified Condition
1 (1) - 4 (E)	SW1 switch pushed	Below 1 Ω
2 (2) - 4 (E)	SW2 switch pushed	Below 1 Ω
3 (MMRY) - 4 (E)	SET switch pushed	Below 1 Ω

If the result is not as specified, replace the switch.

Front Power Seat Switch LH

Front Vertical Slide Switch

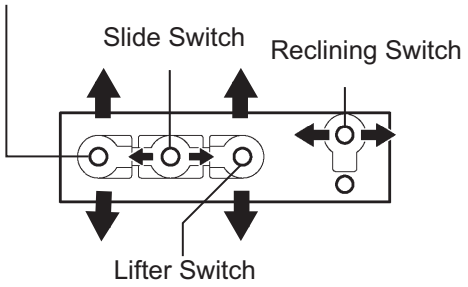

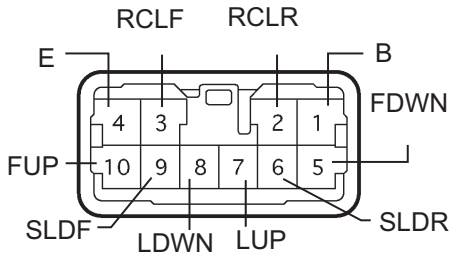

B060011E03

POWER SEAT SWITCH (w/o Memory)

INSPECTION

1. INSPECT FRONT POWER SEAT SWITCH

(a) Inspect the front driver side power seat switch.

(1) Measure the resistance between the terminals when each switch is operated.

Resistance:

Slide switch

Tester Connection	Switch Operation	Specified Condition
1 (B) - 9 (SLDF)	FRONT	Below 1 Ω
4 (E) - 6 (SLDR)	FRONT	Below 1 Ω
4 (E) - 6 (SLDR)	OFF	Below 1 Ω
4 (E) - 9 (SLDF)	OFF	Below 1 Ω
1 (B) - 6 (SLDR)	REAR	Below 1 Ω
4 (E) - 9 (SLDF)	REAR	Below 1 Ω

Front vertical switch

Tester Connection	Switch Operation	Specified Condition
1 (B) - 10 (FUP)	UP	Below 1 Ω
4 (E) - 5 (FDWN)	UP	Below 1 Ω
4 (E) - 5 (FDWN)	OFF	Below 1 Ω
4 (E) - 10 (FUP)	OFF	Below 1 Ω
1 (B) - 5 (FDWN)	DOWN	Below 1 Ω
4 (E) - 10 (FUP)	DOWN	Below 1 Ω

Lifter vertical switch

Tester Connection	Switch Operation	Specified Condition
1 (B) - 7 (LUP)	UP	Below 1 Ω
4 (E) - 8 (LDWN)	UP	Below 1 Ω
4 (E) - 7 (LUP)	OFF	Below 1 Ω
4 (E) - 8 (LDWN)	OFF	Below 1 Ω
1 (B) - 8 (LDWN)	DOWN	Below 1 Ω
4 (E) - 7 (LUP)	DOWN	Below 1 Ω

Reclining switch

Tester Connection	Switch Operation	Specified Condition
1 (B) - 3 (RCLF)	FRONT	Below 1 Ω
2 (RCLR) - 4 (E)	FRONT	Below 1 Ω
2 (RCLR) - 4 (E)	OFF	Below 1 Ω
3 (RCLF) - 4 (E)	OFF	Below 1 Ω
1 (B) - 2 (RCLR)	REAR	Below 1 Ω
3 (RCLF) - 4 (E)	REAR	Below 1 Ω

If the result is not as specified, replace the switch.

SE

Front Power Seat Switch RH

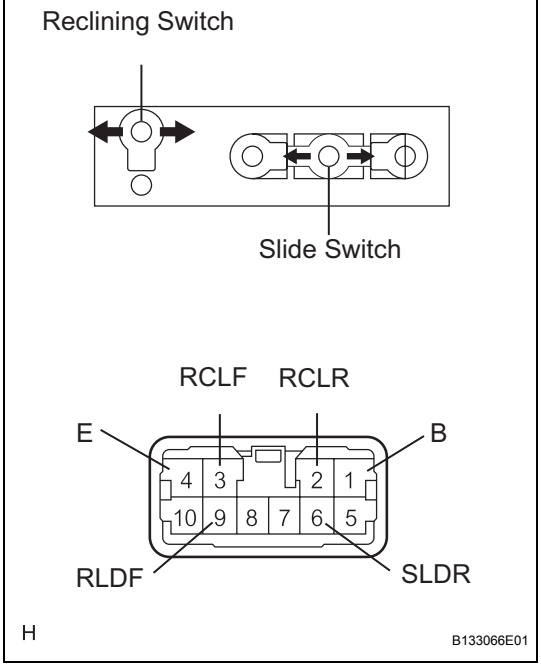

(b) Inspect the front passenger side power seat switch.
(1) Measure the resistance between the terminals when each switch is operated.

Resistance:

Slide switch

Tester Connection	Switch Operation	Specified Condition
1 (B) - 9 (SLDF)	FRONT	Below 1 Ω
4 (E) - 6 (SLDR)	FRONT	Below 1 Ω
4 (E) - 6 (SLDR)	OFF	Below 1 Ω
4 (E) - 9 (SLDF)	OFF	Below 1 Ω
1 (B) - 6 (SLDR)	REAR	Below 1 Ω
4 (E) - 9 (SLDF)	REAR	Below 1 Ω

Reclining switch

Tester Connection	Switch Operation	Specified Condition
1 (B) - 3 (RCLF)	FRONT	Below 1 Ω
2 (RCLR) - 4 (E)	FRONT	Below 1 Ω
2 (RCLR) - 4 (E)	OFF	Below 1 Ω
3 (RCLF) - 4 (E)	OFF	Below 1 Ω
1 (B) - 2 (RCLR)	REAR	Below 1 Ω
3 (RCLF) - 4 (E)	REAR	Below 1 Ω

If the result is not as specified, replace the switch.

Power Seat Switch Assembly
(Leg Cushion Adjuster Switch)

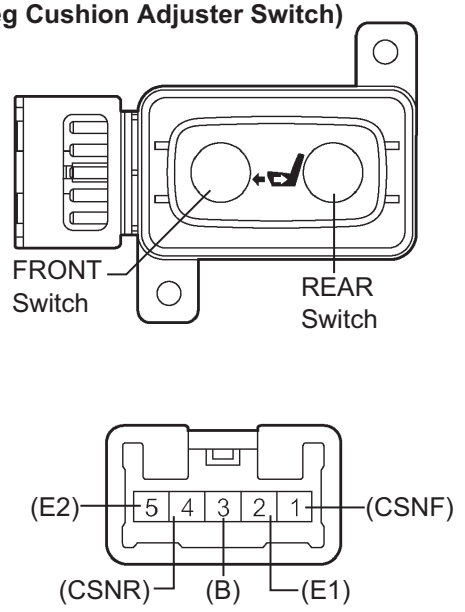

POWER SEAT SWITCH (for Driver Seat)

INSPECTION

1. INSPECT POWER SEAT SWITCH ASSEMBLY

(a) Inspect the leg cushion adjuster switch.

(1) Measure the resistance between the terminals when each switch is operated.

Resistance

Tester Connection	Switch Operation	Specified Condition
1 (CSNF) - 3 (B)	FRONT switch pushed	Below 1 Ω
4 (CSNR) - 5 (E2)	FRONT switch pushed	Below 1 Ω
1 (CSNF) - 2(E1)	Off	Below 1 Ω
4 (CSNR) - 5 (E2)	Off	Below 1 Ω
1 (CSNF) - 2(E1)	REAR switch pushed	Below 1 Ω
3 (B) - 4 (CSNR)	REAR switch pushed	Below 1 Ω

If the result is not as specified, replace the switch.

SE

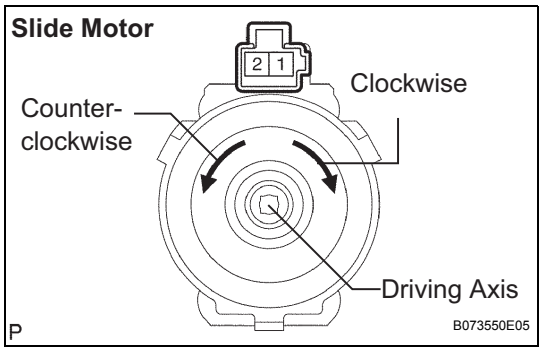

FRONT SEAT FRAME WITH ADJUSTER

INSPECTION

1. INSPECT FRONT SEAT ADJUSTER LH

(a) Check slide motor operation.

(1) Check that the motor rotates smoothly in the direction indicated when the battery is connected to the slide motor connector terminals.

OK

Measurement Condition	Specified Condition
Battery positive (+) → 2 Battery negative (-) → 1	Counterclockwise
Battery positive (+) → 1 Battery negative (-) → 2	Clockwise

If the result is not as specified, replace the front seat adjuster LH.

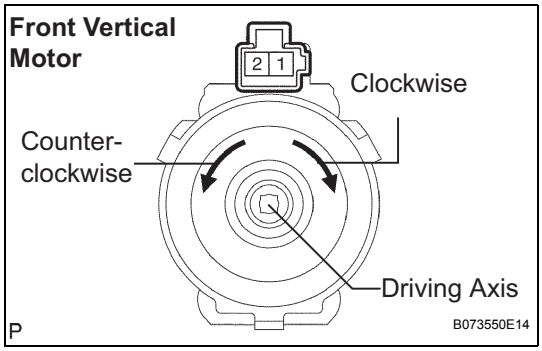

(b) Check front vertical motor operation.

(1) Check that the motor rotates smoothly in the direction indicated when the battery is connected to the vertical motor connector terminals.

OK

Measurement Condition	Specified Condition
Battery positive (+) → 2 Battery negative (-) → 1	Clockwise
Battery positive (+) → 1 Battery negative (-) → 2	Counterclockwise

If the result is not as specified, replace the front seat adjuster LH.

SE

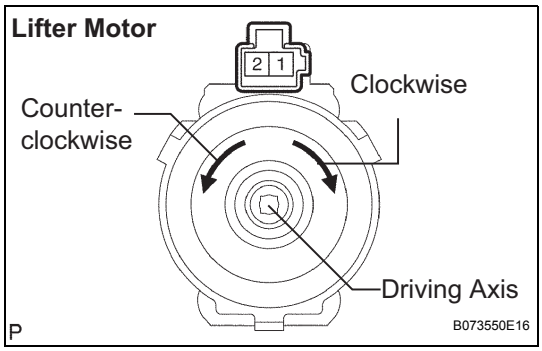

(c) Check lifter motor operation.

(1) Check that the motor rotates smoothly in the direction indicated when the battery is connected to the rear vertical motor connector terminals.

OK

Measurement Condition	Specified Condition
Battery positive (+) → 2 Battery negative (-) → 1	Clockwise
Battery positive (+) → 1 Battery negative (-) → 2	Counterclockwise

If the result is not as specified, replace the front seat adjuster LH.

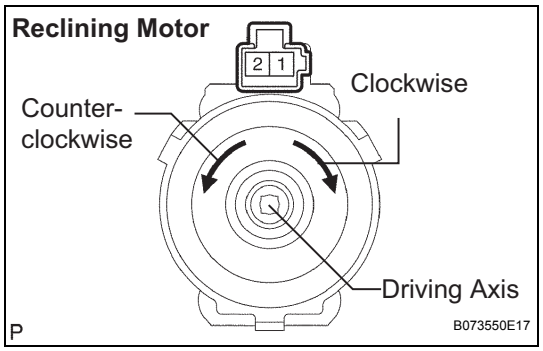

(d) Check reclining motor operation.
(1) Check that the motor rotates smoothly in the direction indicated when the battery is connected to the reclining motor connector terminals.
OK

Measurement Condition	Specified Condition
Battery positive (+) → 2 Battery negative (-) → 1	Clockwise
Battery positive (+) → 1 Battery negative (-) → 2	Counterclockwise

If the result is not as specified, replace the front seat adjuster LH.

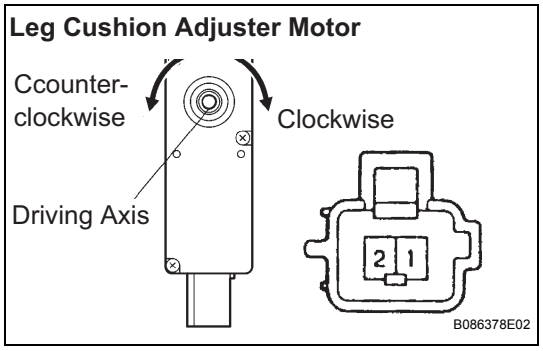

(e) Check leg cushion adjuster motor operation.
(1) Check that the motor rotates smoothly in the direction indicated when the battery is connected to reclining slide motor connector terminals.
OK

Measurement Condition	Specified Condition
Battery positive (+) → 2 Battery negative (-) → 1	Counterclockwise
Battery positive (+) → 1 Battery negative (-) → 2	Clockwise

If the result is not as specified, replace the front seat adjuster LH.

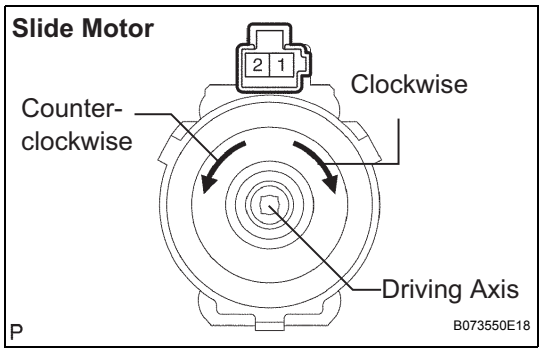

2. INSPECT FRONT SEAT ADJUSTER RH

(a) Check slide motor operation.
(1) Check that the motor rotates smoothly in the direction indicated when the battery is connected to the slide motor connector terminals.
OK

Measurement Condition	Specified Condition
Battery positive (+) → 2 Battery negative (-) → 1	Counterclockwise
Battery positive (+) → 1 Battery negative (-) → 2	Clockwise

If the result is not as specified, replace the front seat adjuster RH.

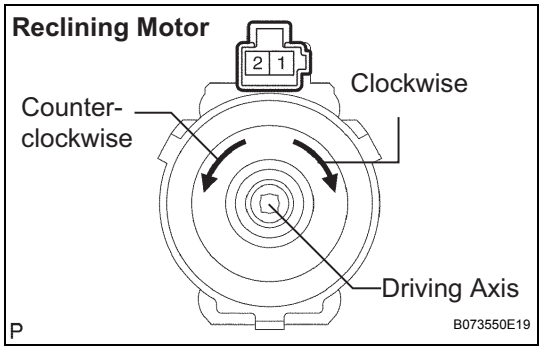

(b) Check reclining motor operation.
(1) Check that the motor rotates smoothly in the direction indicated when the battery is connected to the reclining motor connector terminals.
OK

Measurement Condition	Specified Condition
Battery positive (+) → 2 Battery negative (-) → 1	Clockwise
Battery positive (+) → 1 Battery negative (-) → 2	Counterclockwise

SE

If the result is not as specified, replace the front seat adjuster RH.

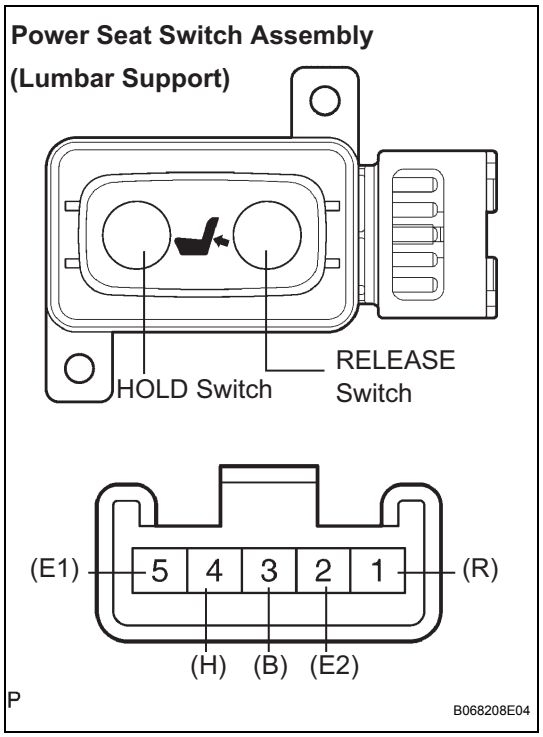

FRONT POWER SEAT LUMBAR SWITCH (for Driver Seat)

INSPECTION

1. INSPECT FRONT POWER SEAT LUMBAR SWITCH

(a) Inspect the lumbar support switch.

(1) Measure the resistance between the terminals when each switch is operated.

Resistance

Tester Connection	Switch Operation	Specified Condition
1 (R) - 2 (E2)	HOLD switch pushed	Below 1 Ω
3 (B) - 4 (H)	HOLD switch pushed	Below 1 Ω
1 (R) - 2 (E2)	Off	Below 1 Ω
4 (H) - 5 (E1)	Off	Below 1 Ω
1 (R) - 3 (B)	RELEASE switch pushed	Below 1 Ω
4 (H) - 5 (E1)	RELEASE switch pushed	Below 1 Ω

If the result is not as specified, replace the switch.

SE

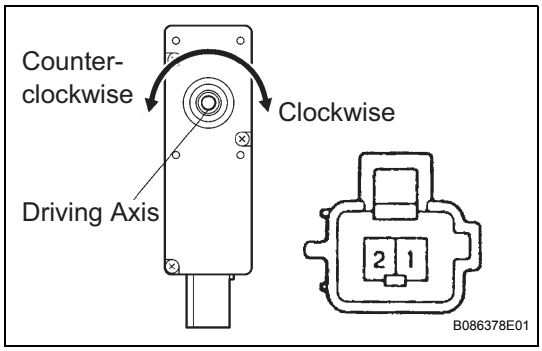

LUMBAR SUPPORT ADJUSTER ASSEMBLY (for Driver Seat)

INSPECTION

1. INSPECT LUMBAR SUPPORT ADJUSTER ASSEMBLY LH

(a) Check lumbar support motor operation.

(1) Check that the motor rotates smoothly in the direction indicated when the battery is connected to the lumbar support motor connector terminals.

OK

Measurement Condition	Specified Condition
Battery positive (+) → 2 Battery negative (-) → 1	Counterclockwise
Battery positive (+) → 1 Battery negative (-) → 2	Clockwise

If the result is not as specified, replace the lumbar support adjuster assembly LH.

Connector Front View:

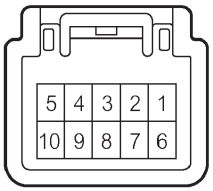

H

B087023E01

SEAT HEATER SWITCH

INSPECTION

1. INSPECT SEAT HEATER SWITCH

(a) Measure the resistance according to the value(s) in the table below.

Resistance

Tester connection	Switch condition	Specified condition
3 - 4	LH side switch minimum position	3.0 to 4.5 kΩ
3 - 4	LH side switch maximum position	0.6 to 0.8 kΩ
1 - 6	RH side switch minimum position	3.0 to 4.5 kΩ
1 - 6	RH side switch maximum position	0.6 to 0.8 kΩ
2 - 4	LH side switch off	10 kΩ or higher
2 - 4	LH side switch on	Below 1 Ω
2 - 6	RH side switch off	10 kΩ or higher
2 - 6	RH side switch on	Below 1 Ω

(b) Connect the battery positive (+) lead to the terminal 8, and battery negative (-) lead to the terminal 5.

OK:

Illumination comes on.

SE

FRONT SEATBACK HEATER

INSPECTION

1. INSPECT FRONT SEATBACK HEATER ASSEMBLY LH

(a) Inspect the seatback heater assembly LH continuity.

Resistance

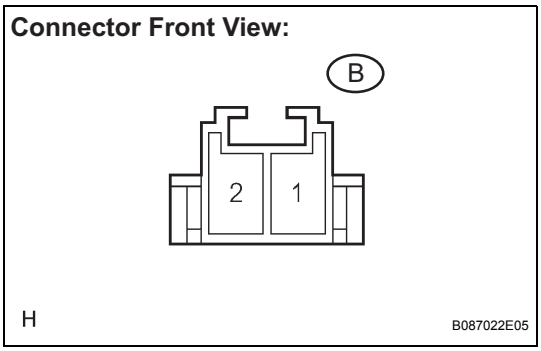

Terminal No.	Condition	Specified condition
1 - 2	Always	Below 1 Ω

If the continuity is not as specified, replace the seatback heater assembly.

2. INSPECT FRONT SEATBACK HEATER ASSEMBLY RH

(a) Inspect the seatback heater assembly RH continuity.

Resistance

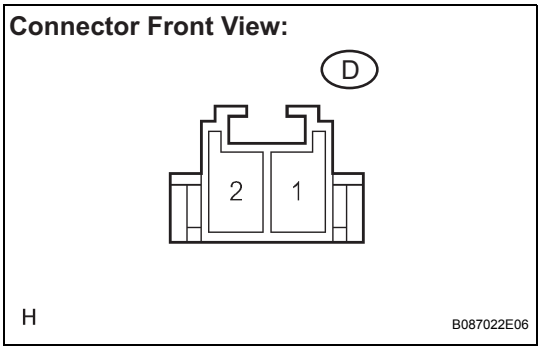

Terminal No.	Condition	Specified condition
1 - 2	Always	Below 1 Ω

If the continuity is not as specified, replace the seatback heater assembly.

FRONT SEAT CUSHION HEATER

INSPECTION

1. INSPECT FRONT SEAT CUSHION HEATER ASSEMBLY LH

(a) Inspect the seat cushion thermostat continuity.

(1) Disconnect the seatback heater from the seat cushion heater.

(2) Heat the temperature sensor and thermostat with a light.

(3) Inspect the seat cushion heater continuity between terminals, as shown below.

Connector Front View:

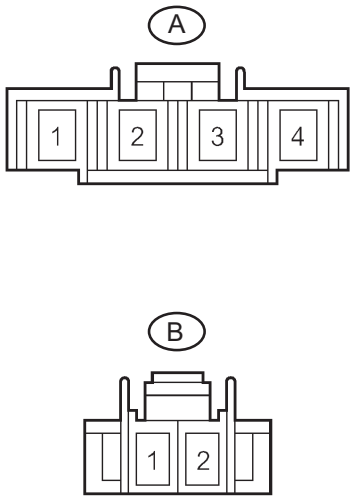

Resistance

Terminal No.	Condition	Specified condition
A-1 - B-2	Seat heater temp. below 25 to 35°C(77 to 95°F)	8,000 to 8,400 Ω
A-1 - B-2	Seat heater temp. 46 to 54°C (115 to 129°F)	3,900 to 4,300 Ω
A-3 - B-1	Seat heater temp. below 25 to 35°C(77 to 95°F)	Below 1 Ω
A-3 - B-1	Seat heater temp. 46 to 54°C (115 to 129°F)	10 kΩ or higher (thermostat OFF)
A-3 - B-2	Seat heater temp. below 25 to 35°C(77 to 95°F)	Below 1 Ω
A-3 - B-2	Seat heater temp. 46 to 54°C (115 to 129°F)	10 kΩ or higher (thermostat OFF)
A-4 - B-1	Always	Below 1 Ω

If the continuity is not as specified, replace the seat cushion heater assembly.

SE

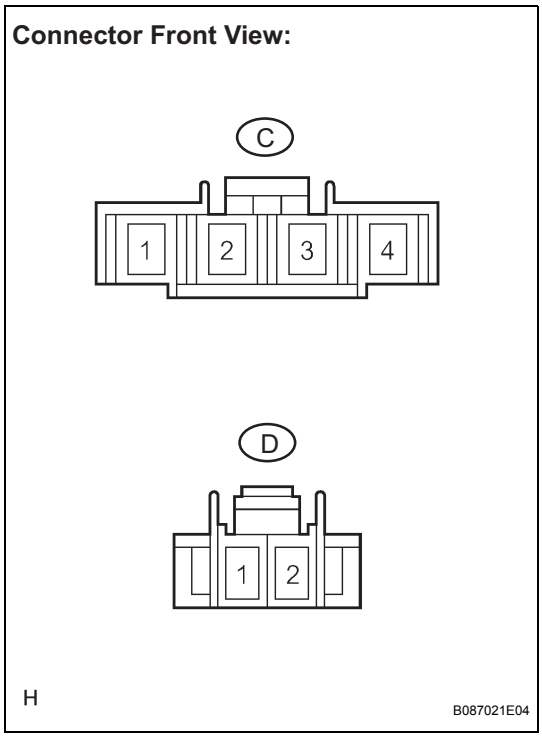

2. INSPECT FRONT SEAT CUSHION HEATER ASSEMBLY RH

(a) Inspect the seat cushion thermostat continuity.
  (1) Disconnect the seatback heater from the seat cushion heater.
  (2) Heat the temperature sensor and thermostat with a light.
  (3) Inspect the seat cushion heater continuity between terminals, as shown below.

Resistance

Terminal No.	Condition	Specified condition
C-1 - D-2	Seat heater temp. below 25 to 35°C (77 to 95°F)	8,000 to 8,400 Ω
C-1 - D-2	Seat heater temp. 46 to 54°C (115 to 129°F)	3,900 to 4,300 Ω
C-3 - D-1	Seat heater temp. below 25 to 35°C (77 to 95°F)	Below 1 Ω
C-3 - D-1	Seat heater temp. 46 to 54°C (115 to 129°F)	10 kΩ or higher (thermostat OFF)
C-3 - D-2	Seat heater temp. below 25 to 35°C (77 to 95°F)	Below 1 Ω
C-3 - D-2	Seat heater temp. 46 to 54°C (115 to 129°F)	10 kΩ or higher (thermostat OFF)
C-4 - D-1	Always	Below 1 Ω

If continuity is not as specified, replace the seat cushion heater assembly.

SEAT BELT SYSTEM

PRECAUTION

CAUTION:
Replace the faulty parts of the seat belt systems (outer belt, inner belt, bolts, nuts, adjustable shoulder anchor, tether anchor hardware, sill-bar, etc.).
Seat belt systems not in use at the time of a collision should also be inspected and replaced if found to be damaged or working improperly.

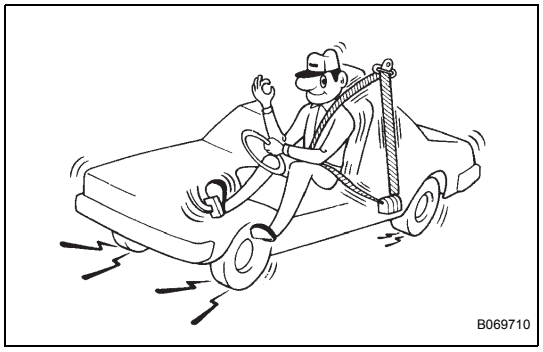

1. RUNNING TEST (IN SAFE AREA)

(a) Fasten the front seat belts.

(b) Drive the vehicle at 16 km/h (10 mph) and slam on the brakes. Check that the belt locks and cannot be extended at this time.
HINT:
Conduct this test in a safe area. If the belt does not lock, remove the belt assembly and perform the inspections. Also whenever installing a new belt assembly, verify the proper operation before installation.

COMPONENTS

POWER SEAT TYPE:

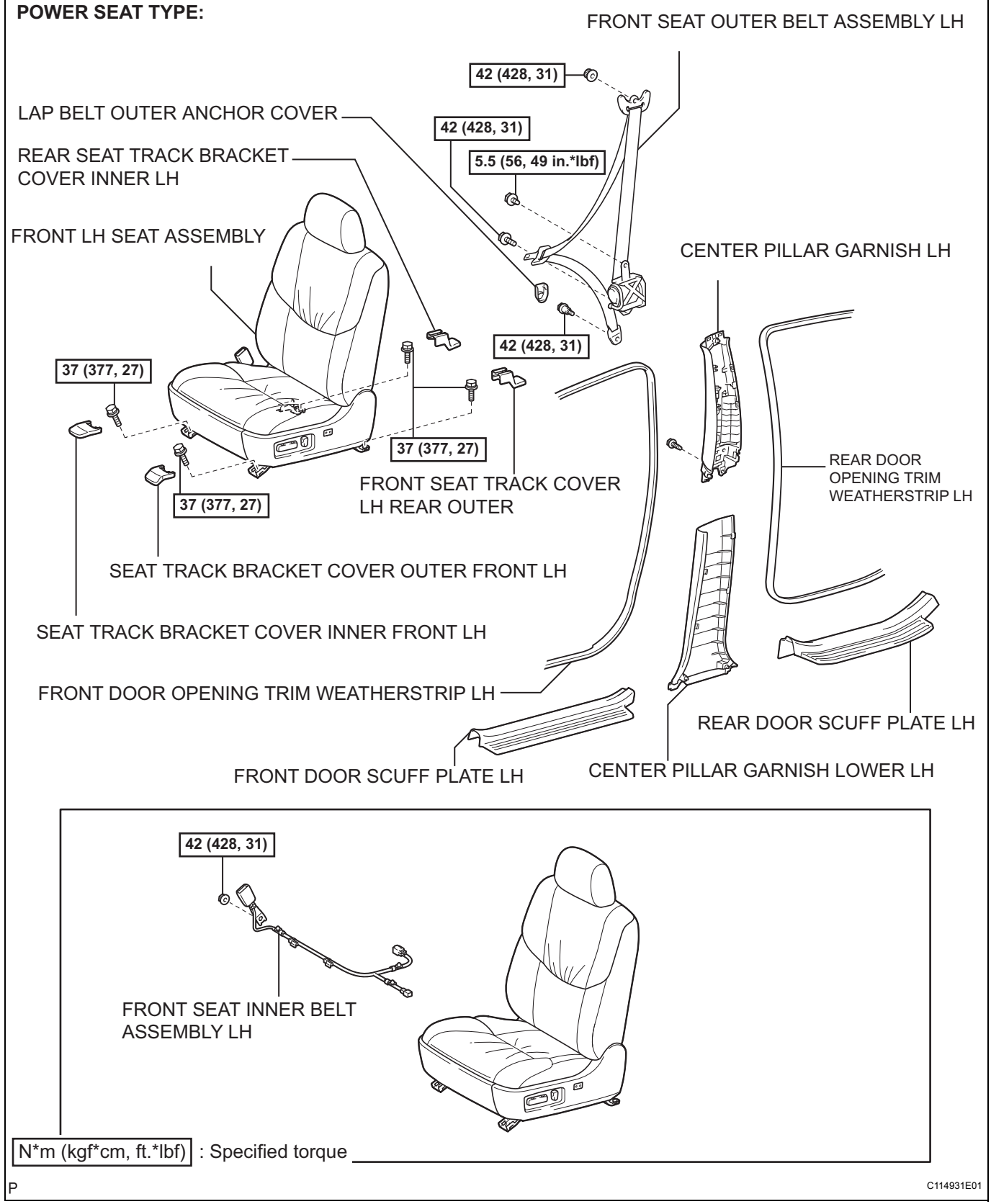

MANUAL SEAT TYPE:

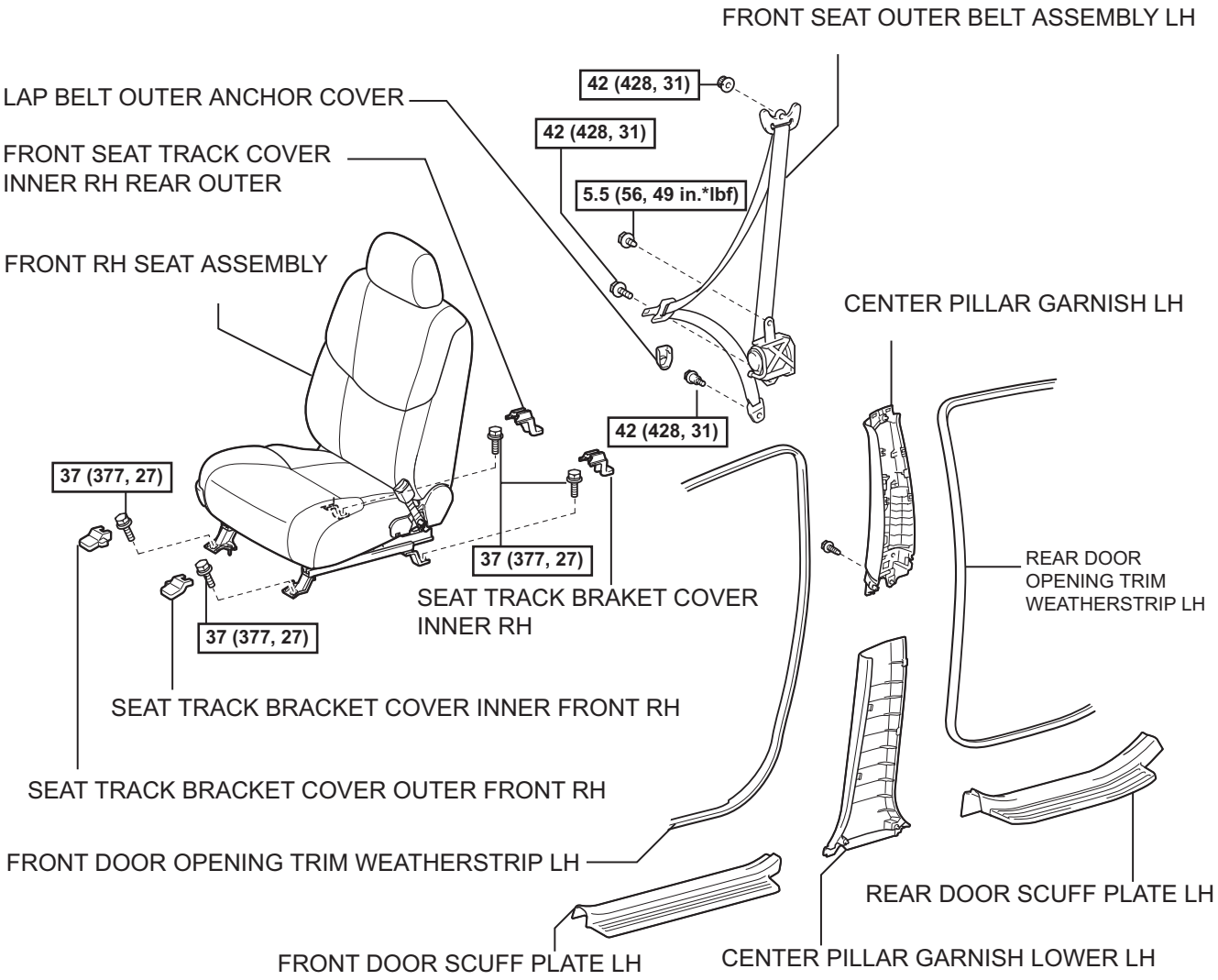

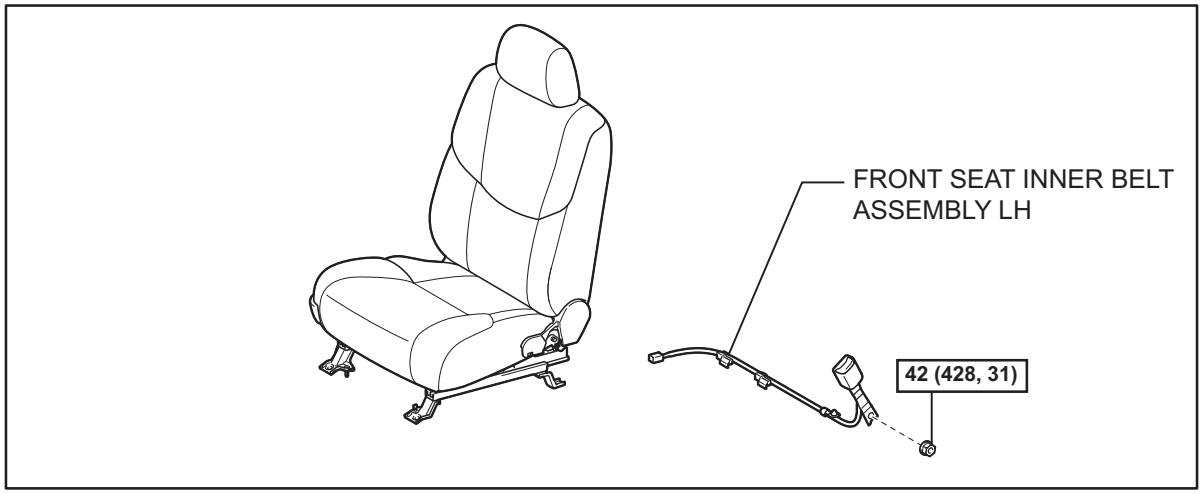

N*m (kgf*cm, ft.*lbf) : Specified torque

P

C114932E01

SB

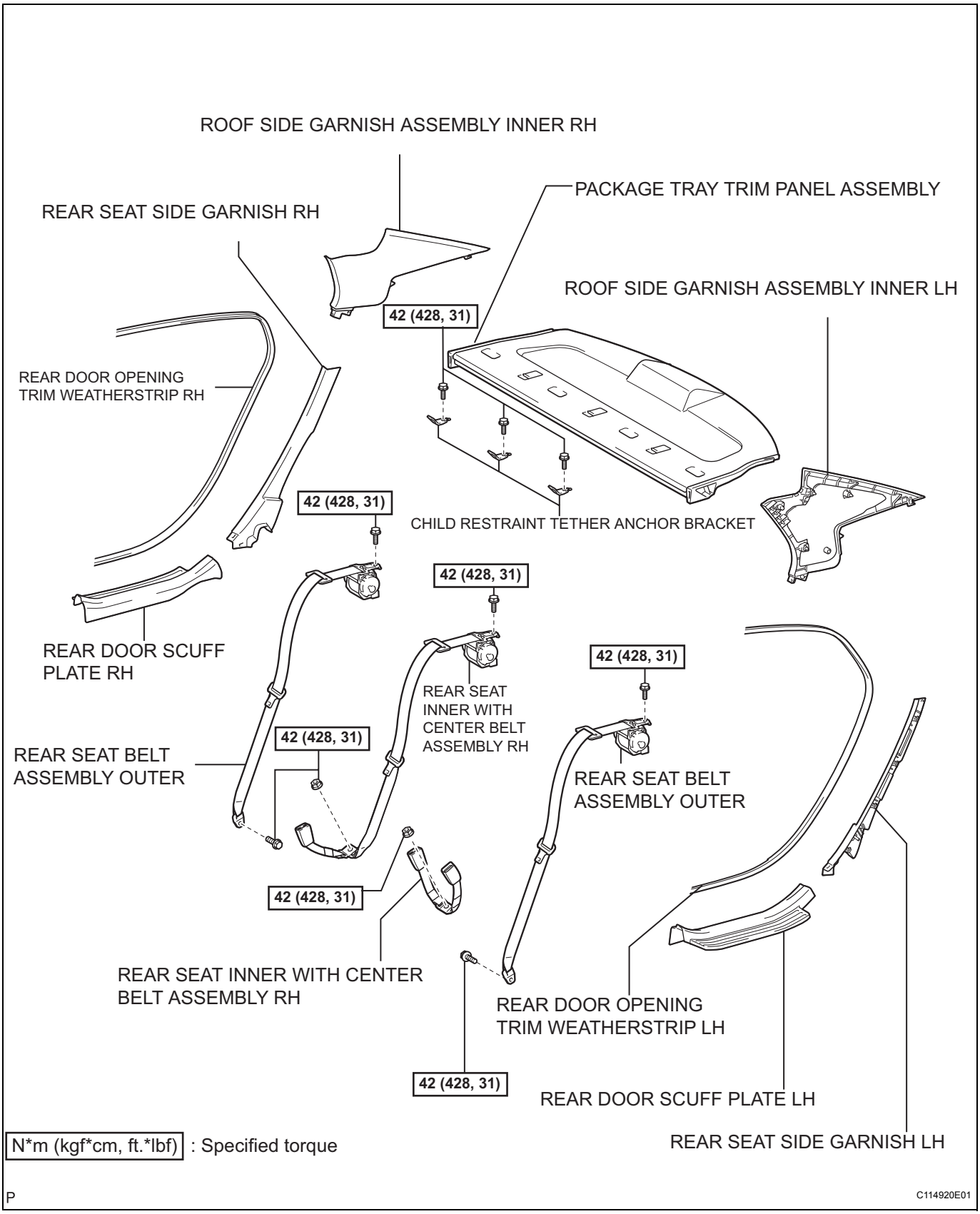
ROOF SIDE GARNISH ASSEMBLY INNER RH
REAR SEAT SIDE GARNISH RH
PACKAGE TRAY TRIM PANEL ASSEMBLY
ROOF SIDE GARNISH ASSEMBLY INNER LH
42 (428, 31)
REAR DOOR OPENING TRIM WEATHERSTRIP RH
CHILD RESTRAINT TETHER ANCHOR BRACKET
REAR DOOR SCUFF PLATE RH
REAR SEAT INNER WITH CENTER BELT ASSEMBLY RH
REAR SEAT BELT ASSEMBLY OUTER
REAR SEAT INNER WITH CENTER BELT ASSEMBLY RH
REAR DOOR OPENING TRIM WEATHERSTRIP LH
REAR DOOR SCUFF PLATE LH
REAR SEAT SIDE GARNISH LH
N*m (kgf*cm, ft.*lbf) : Specified torque
P
C114920E01

SB

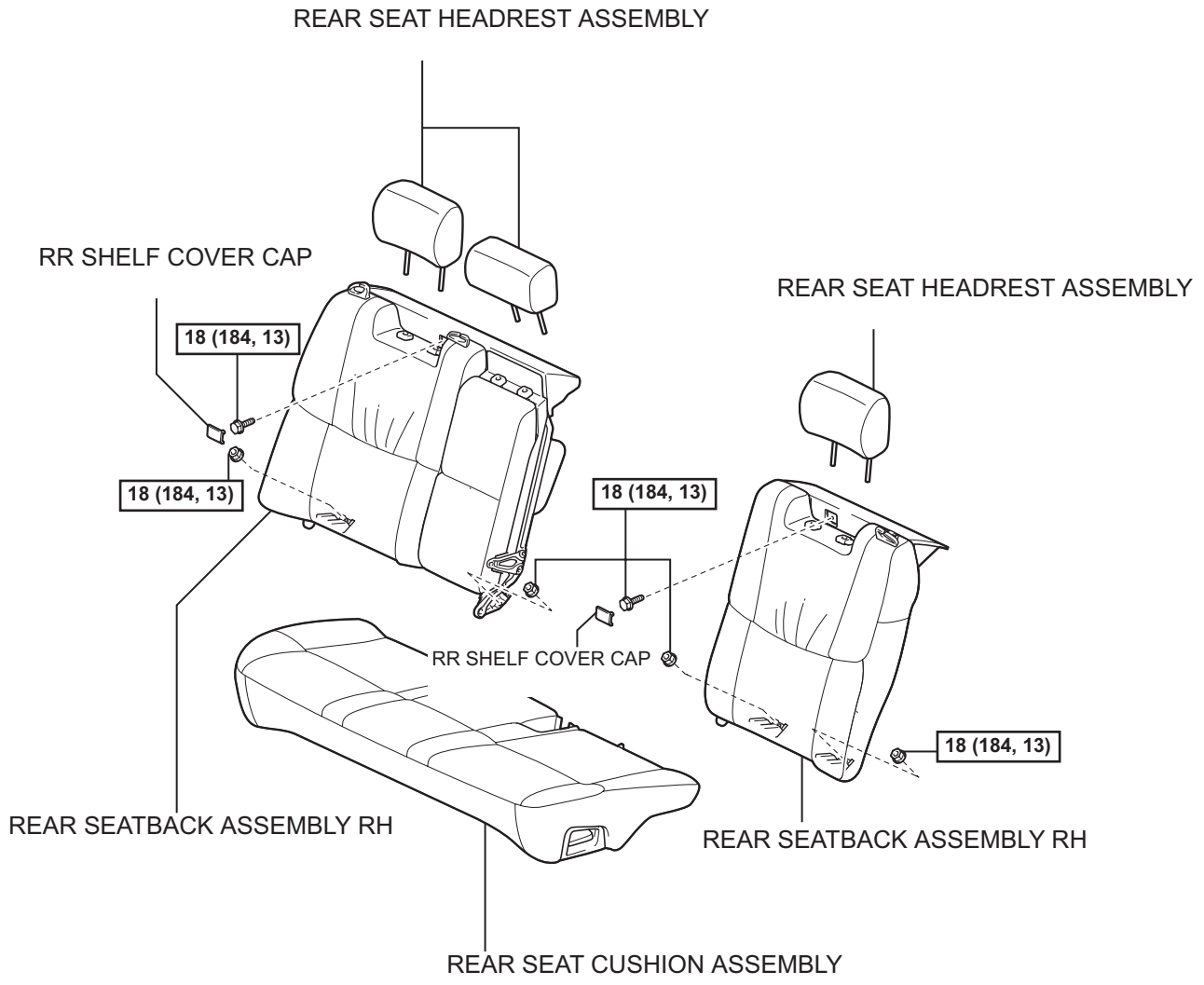

N*m (kgf*cm, ft.*lbf) : Specified torque

P

C114933E01

FRONT SEAT INNER BELT ASSEMBLY

COMPONENTS

SB

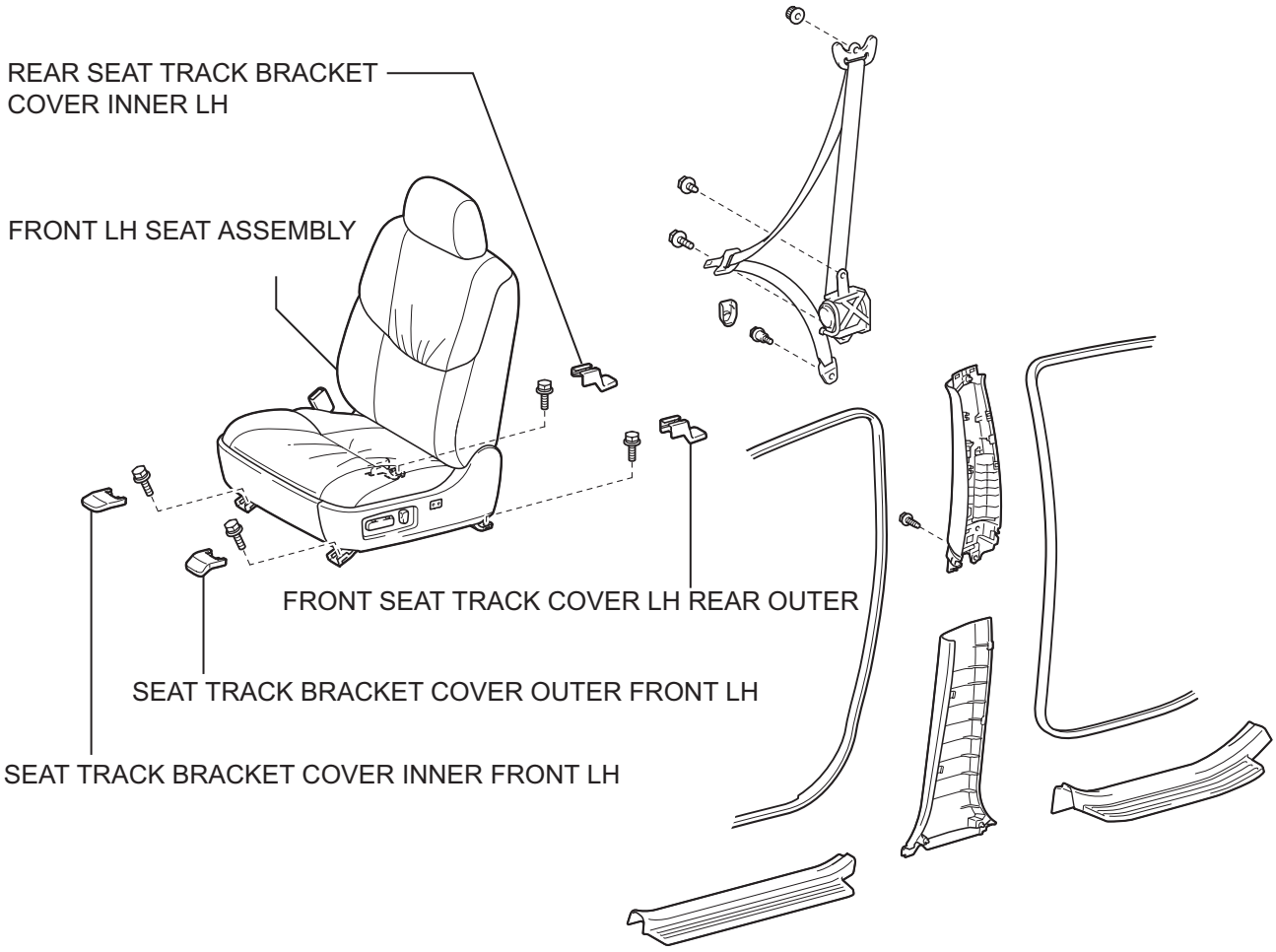

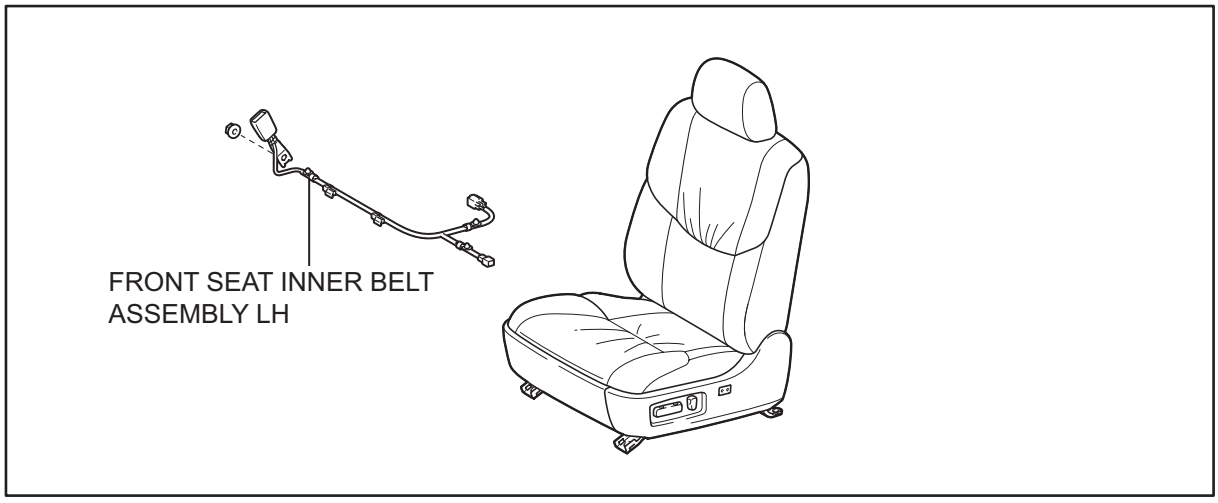

P

C114931E02

SB

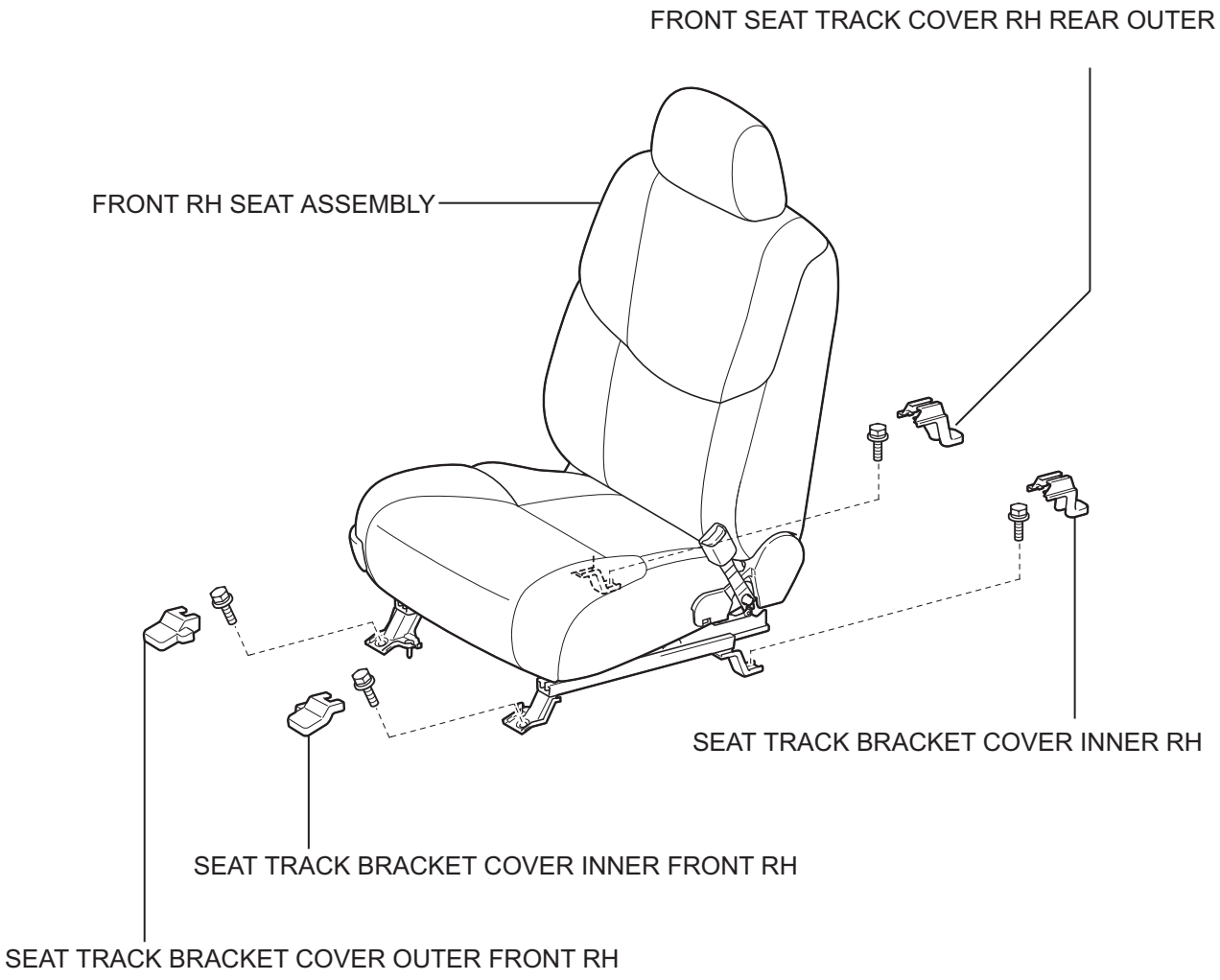

P

B115031E04

SB

REMOVAL

HINT:
Use the same procedures for the RH side and LH side.

1. **REMOVE SEAT TRACK BRACKET COVER OUTER FRONT LH (for Power Seat) (See page SE-50)**
2. **REMOVE SEAT TRACK BRACKET COVER INNER FRONT LH (for Power Seat) (See page SE-50)**
3. **REMOVE FRONT SEAT TRACK COVER LH REAR OUTER (for Power Seat) (See page SE-50)**
4. **REMOVE REAR SEAT TRACK BRACKET COVER INNER LH (for Power Seat) (See page SE-51)**
5. **REMOVE FRONT LH SEAT ASSEMBLY (for Power Seat) (See page SE-51)**
6. **DISCONNECT CABLE FROM NEGATIVE BATTERY TERMINAL (for Manual Seat)**
   HINT:
   See page RS-1
7. **REMOVE SEAT TRACK BRACKET COVER OUTER FRONT RH (for Manual Seat) (See page SE-40)**
8. **REMOVE SEAT TRACK BRACKET COVER INNER FRONT RH (for Manual Seat) (See page SE-40)**
9. **REMOVE FRONT SEAT TRACK COVER RH REAR OUTER (for Manual Seat) (See page SE-40)**
10. **REMOVE SEAT TRACK BRACKET COVER INNER RH (for Manual Seat) (See page SE-40)**
11. **REMOVE FRONT RH SEAT ASSEMBLY (for Manual Seat) (See page SE-40)**
12. **REMOVE FRONT SEAT INNER BELT ASSEMBLY LH**
    (a) Driver's seat:
        (1) Disconnect the connector.
        (2) Disengage the claw and the 4 clamps.

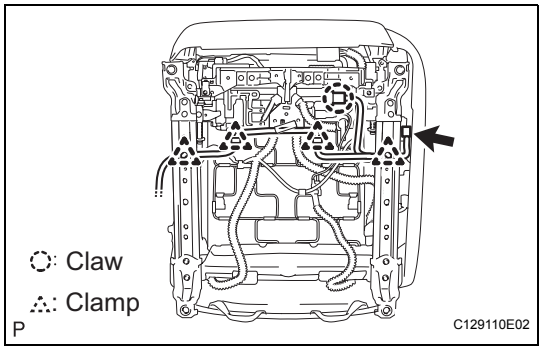

    (b) Passenger's manual seat:
        (1) Disengage the claw and the 3 clamps.

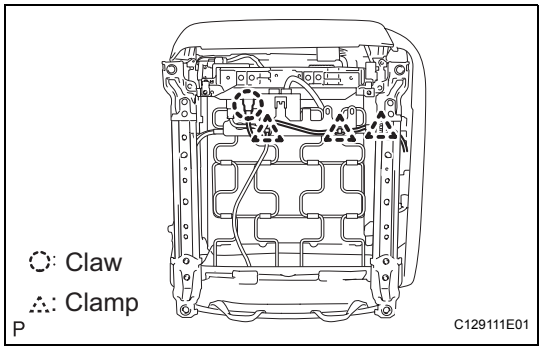

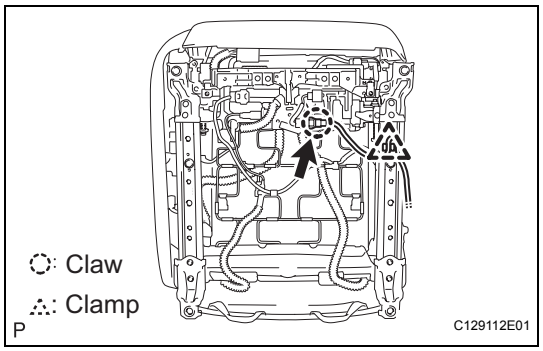

(c) Passenger's power seat:
(1) Disconnect the connector.
(2) Disengage the claw and the clamp.

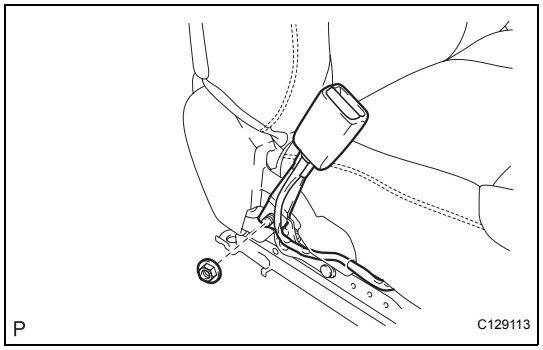

(d) Remove the nut and the front seat inner belt assembly LH.

INSTALLATION

1. INSTALL FRONT SEAT INNER BELT ASSEMBLY LH

(a) Install the front seat inner belt assembly LH with the nut.

Torque: 42 N*m (428 kgf*cm, 31 ft.*lbf)

NOTICE:

Do not overlap the anchor part of the rear belt and the protruding part of the rear seat adjuster.

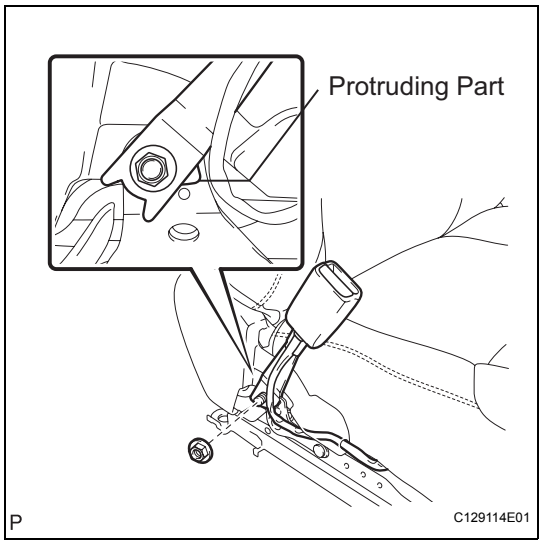

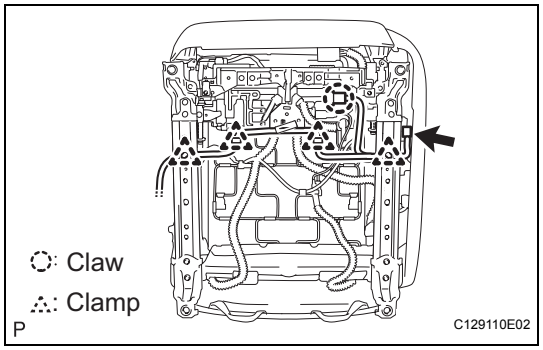

(b) Driver's seat:
(1) Engage the claw and the 4 clamps.
(2) Connect the connector.

SB

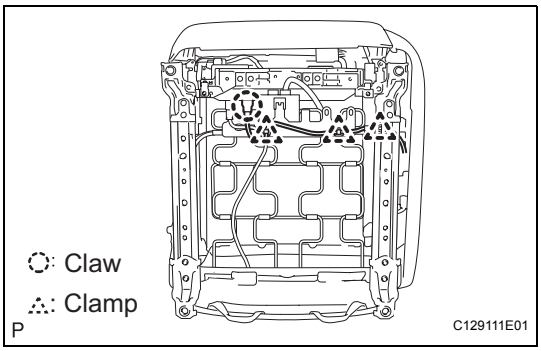

(c) Passenger's manual seat:
(1) Engage the claw and the 3 clamps.

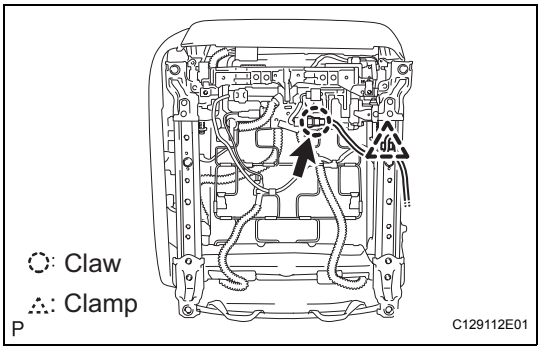

(d) Passenger's power seat:
(1) Engage the claw and the clamp.
(2) Connect the connector.

2. **INSTALL FRONT LH SEAT ASSEMBLY (for Power Seat) (See page SE-63)**

3. **INSTALL FRONT RH SEAT ASSEMBLY (for Manual Seat) (See page SE-42)**

4. **CONNECT CABLE TO NEGATIVE BATTERY TERMINAL (for Manual Seat)**

5. **PERFORM INITIALIZATION**
HINT:
See page IN-29

6. **INSPECT FUNCTION OF POWER SEAT OPERATION (for Power Seat)**
HINT:
See page SE-28

7. **CHECK SEAT SLIDE ADJUSTER LOCKS (for Manual Seat) (See page SE-43)**

8. **CHECK SEAT HEATER OPERATION (w/ Seat Heater System)**

9. **INITIALIZE FRONT PASSENGER OCCUPANT CLASSIFICATION SYSTEM (for Front Passenger Seat)**
HINT:
See page IN-29

10. **INSPECT SRS WARNING LIGHT**
HINT:
See page RS-28

FRONT SEAT OUTER BELT ASSEMBLY

COMPONENTS

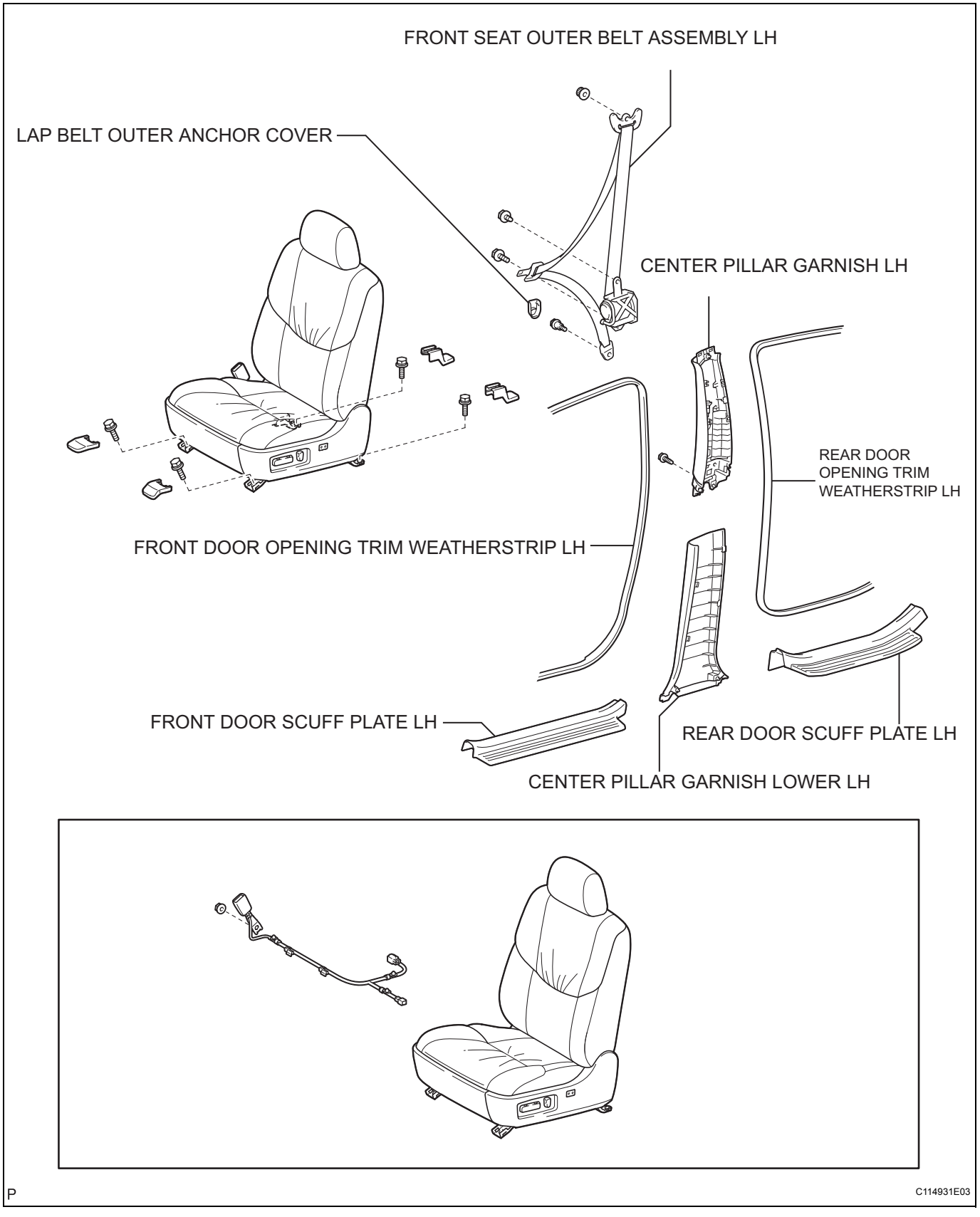

SB

REMOVAL

CAUTION:

- **Removal of the seat belt pretensioner must be started at least 90 seconds after the ignition switch is turned off and the negative (-) terminal cable is disconnected from the battery.**
- **Carefully read the notices for the "pretensioner" in the SRS airbag system section and the front seat outer belt section (See page RS-1).**

HINT:

- The installation procedures are the removal procedures in reverse order. However, only installation procedures requiring additional information are included.
- Use the same procedures for the RH side and LH side.

1. **DISCONNECT CABLE FROM NEGATIVE BATTERY TERMINAL**
   HINT:
   See page RS-1
2. **REMOVE FRONT DOOR SCUFF PLATE LH (See page IR-12)**
3. **REMOVE REAR DOOR SCUFF PLATE LH (See page IR-12)**
4. **REMOVE FRONT DOOR OPENING TRIM WEATHERSTRIP LH**
5. **REMOVE REAR DOOR OPENING TRIM WEATHERSTRIP LH**
6. **REMOVE CENTER PILLAR GARNISH LOWER LH**
7. **REMOVE LAP BELT OUTER ANCHOR COVER**
   (a) Disengage the 2 claws and remove the lap belt outer anchor cover.

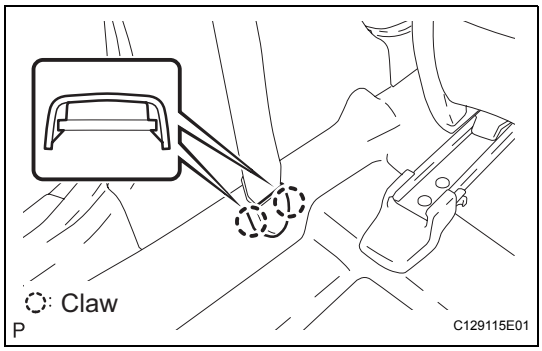

8. **DISCONNECT FRONT SEAT OUTER BELT ASSEMBLY LH**
   (a) Remove the bolt and disconnect the front seat outer belt assembly LH.
9. **REMOVE CENTER PILLAR GARNISH LH (See page IR-13)**

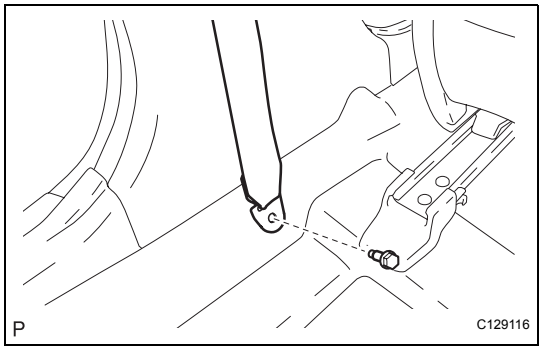

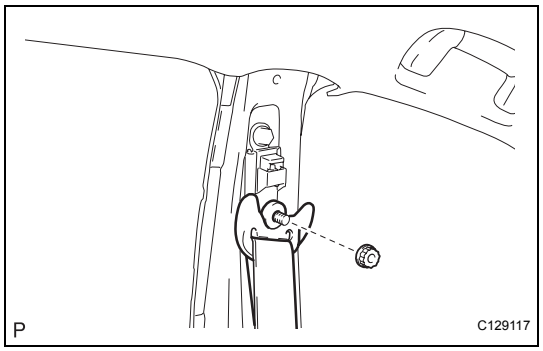

10. REMOVE FRONT SEAT OUTER BELT ASSEMBLY LH

(a) Remove the nut.

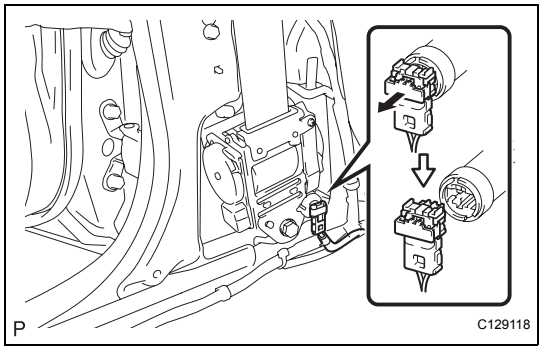

(b) Disconnect the pretensioner connector, as shown in the illustration.

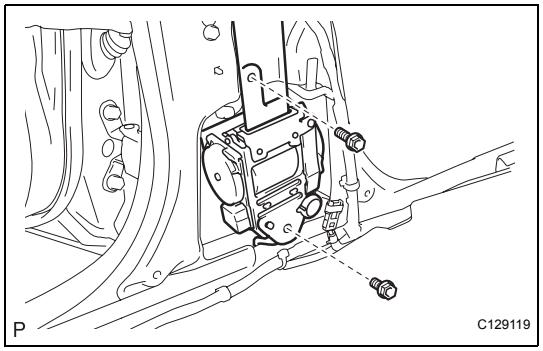

(c) Remove the 2 bolts and the front seat outer belt assembly LH.

SB

INSTALLATION

1. INSTALL FRONT SEAT OUTER BELT ASSEMBLY LH
NOTICE:
Do not disassemble the retractor.

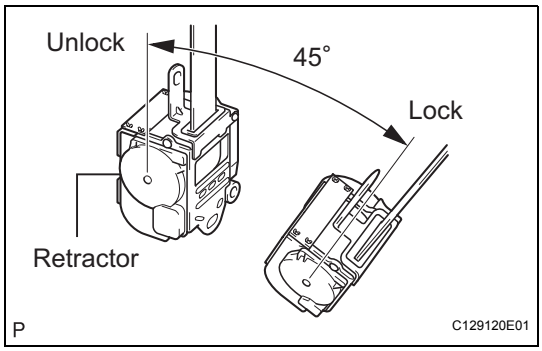

(a) Check the degree of inclination required to lock the retractor.
(1) When the inclination of the retractor is 15° or less, check that the belt can be pulled from the retractor. When the inclination of the retractor is over 45°, check that the belt locks.
If operation is not as specified, replace the outer belt assembly.

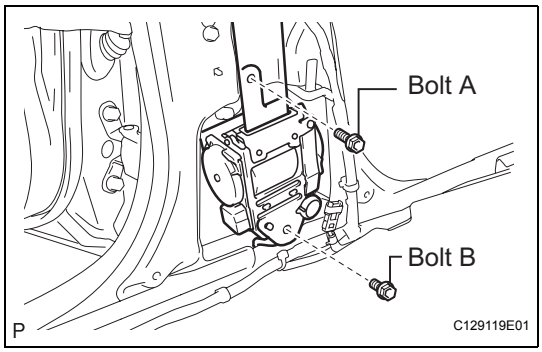

(b) Install the front seat outer belt assembly LH with the 2 bolts.
Torque: Bolt A
5.5 N*m (56 kgf*cm, 49 in.*lbf)
Bolt B
42 N*m (428 kgf*cm, 31 ft.*lbf)

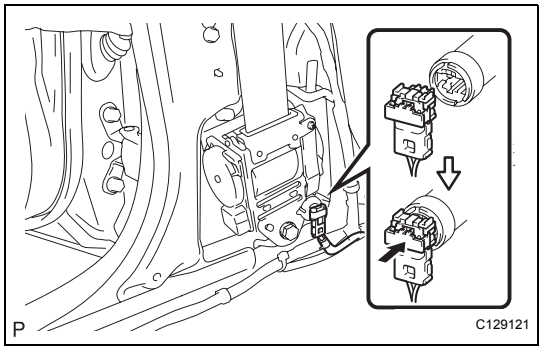

(c) Connect the pretensioner connector, as shown in the illustration.

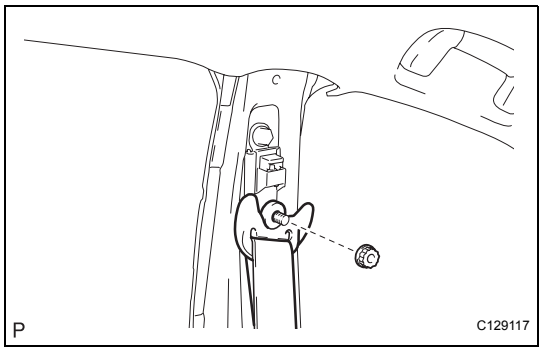

(d) Install the nut.
Torque: 42 N*m (428 kgf*cm, 31 ft.*lbf)

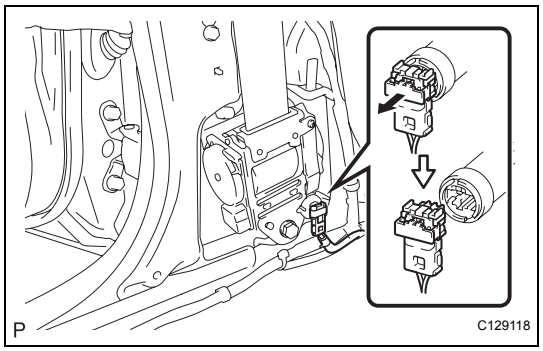

2. INSTALL FRONT SEAT OUTER BELT ASSEMBLY LH

(a) Install the front seat outer belt assembly with the bolt.
Torque: 42 N*m (428 kgf*cm, 31 ft.*lbf)

(b) Check if the ELR locks.
NOTICE:
The check should be performed with the outer belt assembly installed.

(1) With the belt assembly installed, check that the belt locks when it is pulled out quickly.
If operation is not as specified, replace the outer belt assembly.

3. CONNECT CABLE TO NEGATIVE BATTERY TERMINAL

4. PERFORM INITIALIZATION
HINT:
See page IN-29

5. INSPECT SRS WARNING LIGHT
HINT:
See page RS-28

SB

DISPOSAL

HINT:
When scrapping vehicles equipped with a seat belt pretensioner or disposing of a front seat outer belt (with a seat belt pretensioner), always activate the seat belt pretensioner first in accordance with the procedures described below. If any abnormality occurs during activation of the seat belt pretensioner, contact the SERVICE DEPARTMENT of TOYOTA MOTOR SALES, USA, INC.
When disposing of a front seat outer belt assembly (with a seat belt pretensioner) that was activated in a collision, perform procedure "A" to "B" in this section.

CAUTION:

- **Never dispose of a front seat outer belt assembly that has an inactivated pretensioner.**
- **The seat belt pretensioner produces a loud exploding sound when it activates. Perform the operation where it will not surprise or disturb people nearby.**
- **When activating a front seat outer belt (with a seat belt pretensioner), stand at least 10 m (33ft) away from the front seat outer belt.**
- **Use gloves and safety glasses when handing a front seat belt with an activated pretensioner.**
- **Always wash your hands with water after completing the disposal.**
- **Do not apply water to a front seat outer belt that has an activated pretensioner.**
- **Perform procedures in a place away from electrical interference.**
- **When activating the seat belt pretensioner, always use the specified SST (SRS airbag deployment tool).**

1. DISPOSE OF FRONT SEAT OUTER BELT ASSEMBLY LH

HINT:
Prepare a battery for power activation of the seat belt pretensioner.

(a) Check if SST functions. (Procedure "A")

CAUTION:
When activating the seat belt pretensioner, always use the specified SST.
SST 09082-00700, 09082-00770

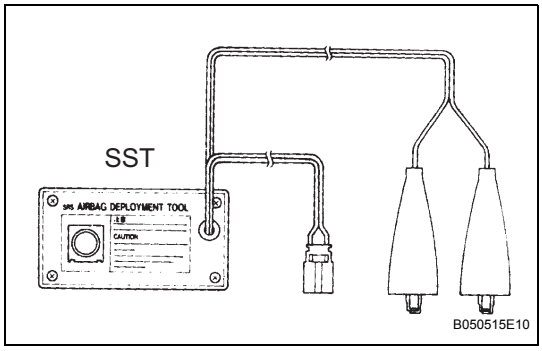

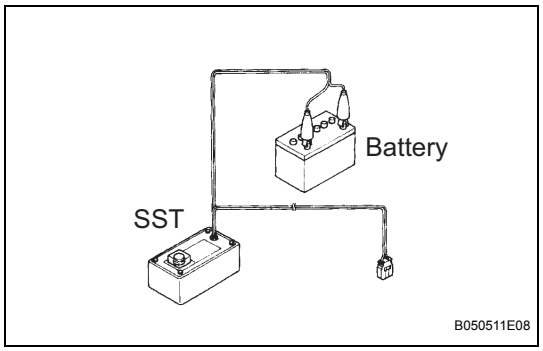

(1) Connect the SST red clip to the battery's positive (+) terminal and the black clip to the battery's negative (-) terminal.
HINT:
Do not connect the yellow connector. It is used to connect to the seat belt pretensioner.

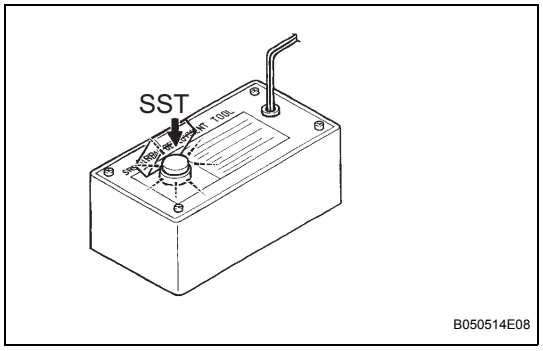

(2) Press the SST activation switch and check that the LED of the SST activation switch turns on.
CAUTION:
If the LED turns on when the activation switch is not being pressed, SST may be malfunctioning. Replace the SST with a new one.

(b) Disconnect the SST from the battery.

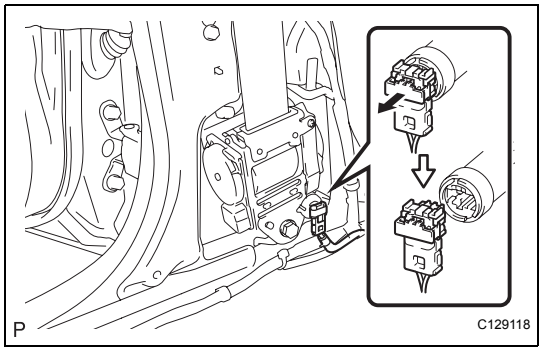

(c) Disconnect the pretensioner connector, as shown in the illustration.

(d) Install the front seat outer belt assembly floor anchor with the bolt.
Torque: 42 N*m (428 kgf*cm, 31 ft.*lbf)

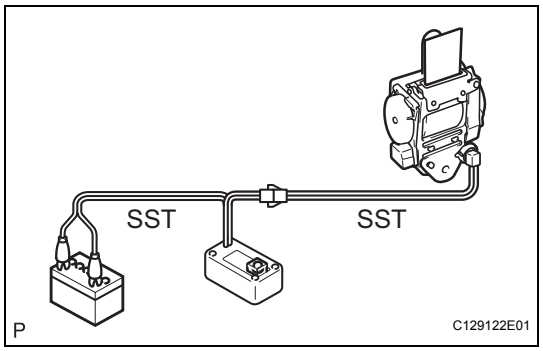

(e) Connect SST.
(1) Connect SST, then connect the yellow connector to the seat belt pretensioner.
SST 09082-00700, 09082-00770
NOTICE:
To avoid damaging the SST connector and wire harness, do not lock the secondary lock of the twin lock.

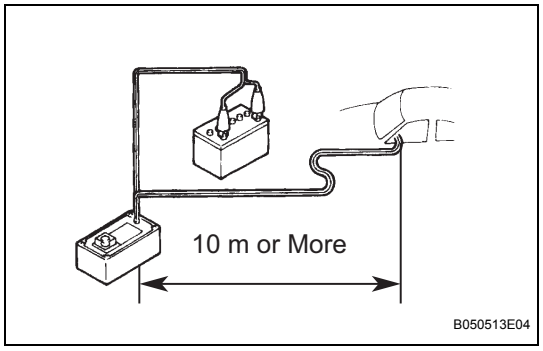

(2) Move the SST at least 10 m (33 ft) away from the front of the vehicle.

(3) Close all the doors and windows of the vehicle.
HINT:
Leave a gap in one of the windows for inserting the SST wire harness.
NOTICE:
Take care not to damage the SST wire harness.

(4) Connect the SST red clip to the battery's positive (+) terminal and the black clip to the negative (-) terminal.

(f) Activate the seat belt pretensioner (Procedure B).
(1) Confirm that no one is inside the vehicle or within a 10 m (33 ft) radius of the vehicle.
(2) Press the SST activation switch to activate the seat belt pretensioner.
HINT:
The seat belt pretensioner operates at the same time as the SST activation switch's LED light.

(g) Dispose of the outer belt (with the seat belt pretensioner).
CAUTION:
- **Do not touch the outer belt for at least 30 minutes after the seat belt pretensioner has been activated. It is very hot.**
- **Use gloves and safety glasses when handing an outer belt whose presentioner has been activated.**
- **Always wash your hands with water after completing the disposal.**
- **Do not apply water to a front seat outer belt that has an activated pretensioner.**

HINT:
When scrapping a vehicle, activate the seat belt pretensioner, and then scrap the vehicle with the activated outer belt installed.

2. DISPOSE OF FRONT SEAT OUTER ASSEMBLY LH
HINT:
Prepare a battery for power activation of the seat belt pretensioner.
NOTICE:
- **When disposing of the front seat outer belt (with the seat belt pretensioner) only, never use the customer's vehicle to activate the seat belt pretensioner.**
- **Be sure to follow the procedures listed below before activating the seat belt pretensioner.**

(a) Remove the front seat outer belt assembly.
(1) Wind the seat belt with the retractor
(2) When the seat belt is sufficiently wound, cut the seat belt approximately 100 mm (3.93 in.) from the retractor, as shown in the illustration.
HINT:
The seat belt is designed so that winding the seat belt as much as possible before pretensioner activation will decrease the pulling power of the seat belt during pretensioner activation.

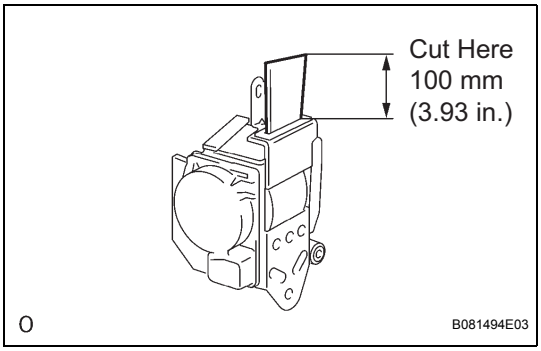

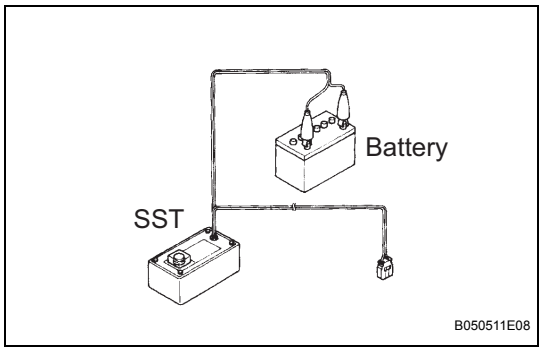

(b) Check if SST functions. (See procedure "A")
CAUTION:
When activating a seat belt pretensioner, always use the specified SST.
SST 09082-00700, 09082-00770

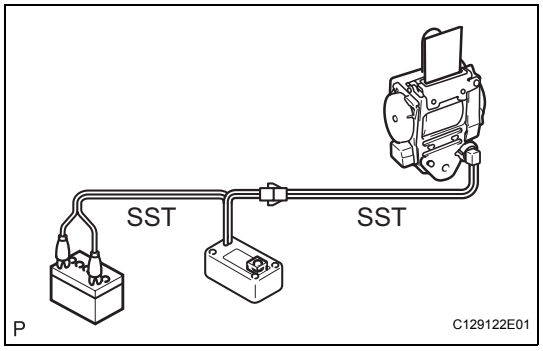

(c) Connect the SST.
(1) Connect the SST, then connect the yellow connector to the seat belt pretensioner.
NOTICE:
To avoid damaging the SST connector and wire harness, do not lock the secondary lock of the twin lock.

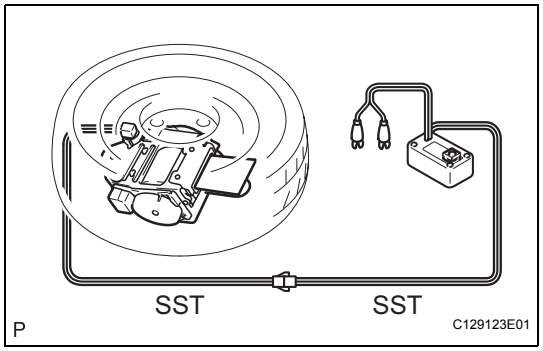

(2) Place the outer belt on the ground and cover it with a tire with the wheel attached.
NOTICE:
Set up the front seat outer belt assembly as shown in the illustration.

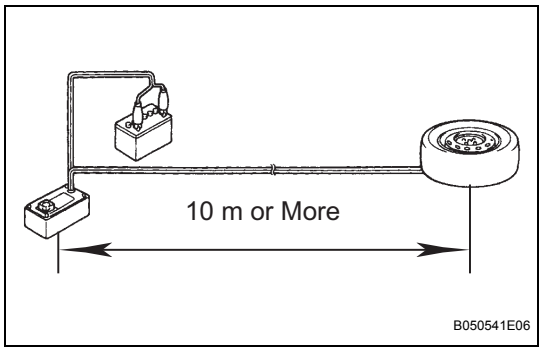

(3) Move the SST at least 10 m (33 ft) away from the wheel.
NOTICE:
Take care not to damage the SST wire harness.

(d) Activate the seat belt pretensioner.
(1) Connect the SST red clip to the battery's positive (+) terminal and the black clip to the battery's negative (-) terminal.
(2) Check that no one is within a 10 m (33 ft) radius of the wheel.
(3) Press the SST activation switch to activate the seat belt pretensioner.
HINT:
The seat belt pretensioner operates at the same time as the SST activation switch's LED light.

SB

(e) Dispose of the outer belt (with the seat belt pretensioner).

CAUTION:

- **Do not touch the outer belt for at least 30 minutes after the seat belt pretenioner has been activated. It is very hot.**
- **Use gloves and safety glasses when handing an outer belt assembly whose pretenioner has been activated.**
- **Always wash your hands with water after completing disposal.**
- **Do not apply water to an outer belt assembly that has an activated pretensioner.**

(1) Remove the tire with wheel and SST.

(2) Place the outer belt in a plastic bag, tie the end tightly and dispose of it in the same way as other general parts.

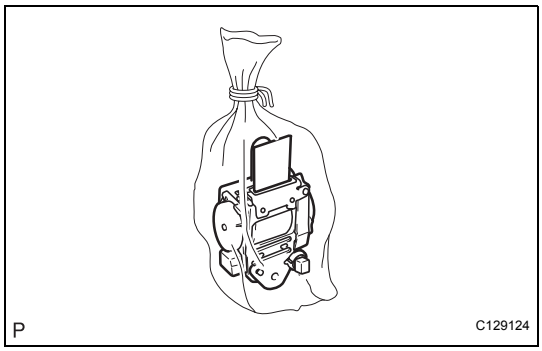

REAR SEAT OUTER BELT ASSEMBLY

COMPONENTS

SB

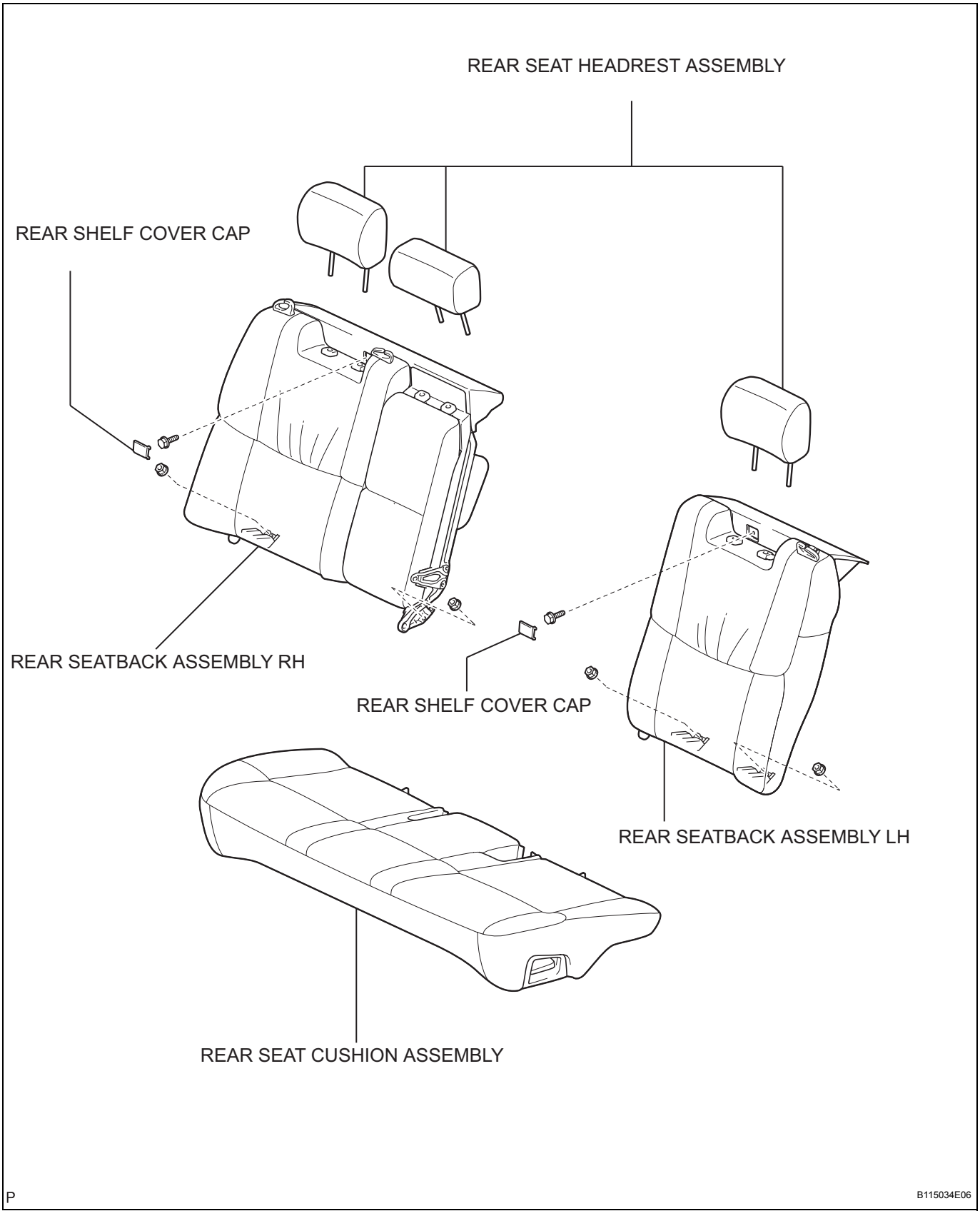

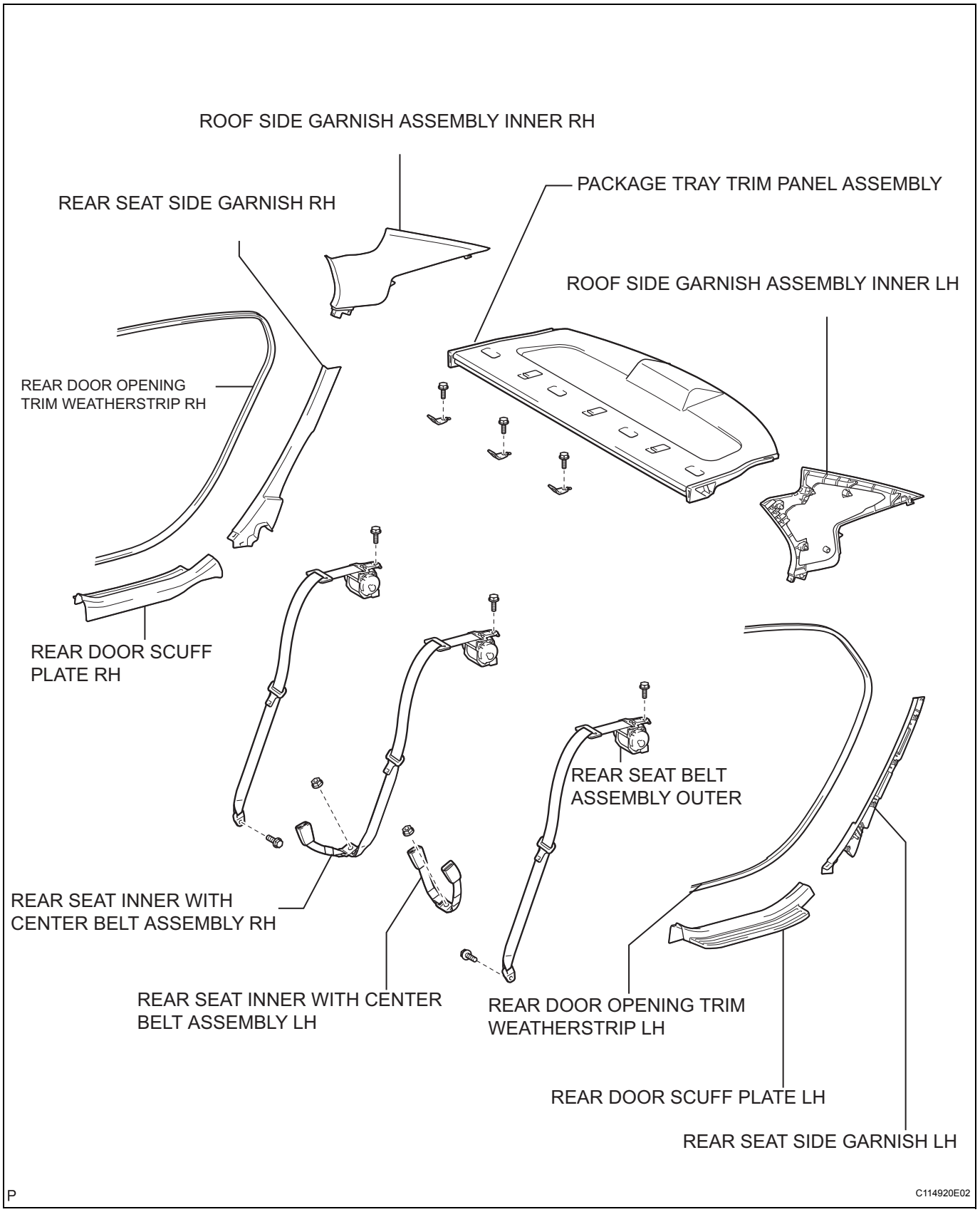
ROOF SIDE GARNISH ASSEMBLY INNER RH
REAR SEAT SIDE GARNISH RH
PACKAGE TRAY TRIM PANEL ASSEMBLY
ROOF SIDE GARNISH ASSEMBLY INNER LH
REAR DOOR OPENING TRIM WEATHERSTRIP RH
REAR DOOR SCUFF PLATE RH
REAR SEAT BELT ASSEMBLY OUTER
REAR SEAT INNER WITH CENTER BELT ASSEMBLY RH
REAR SEAT INNER WITH CENTER BELT ASSEMBLY LH
REAR DOOR OPENING TRIM WEATHERSTRIP LH
REAR DOOR SCUFF PLATE LH
REAR SEAT SIDE GARNISH LH
P
C114920E02

SB

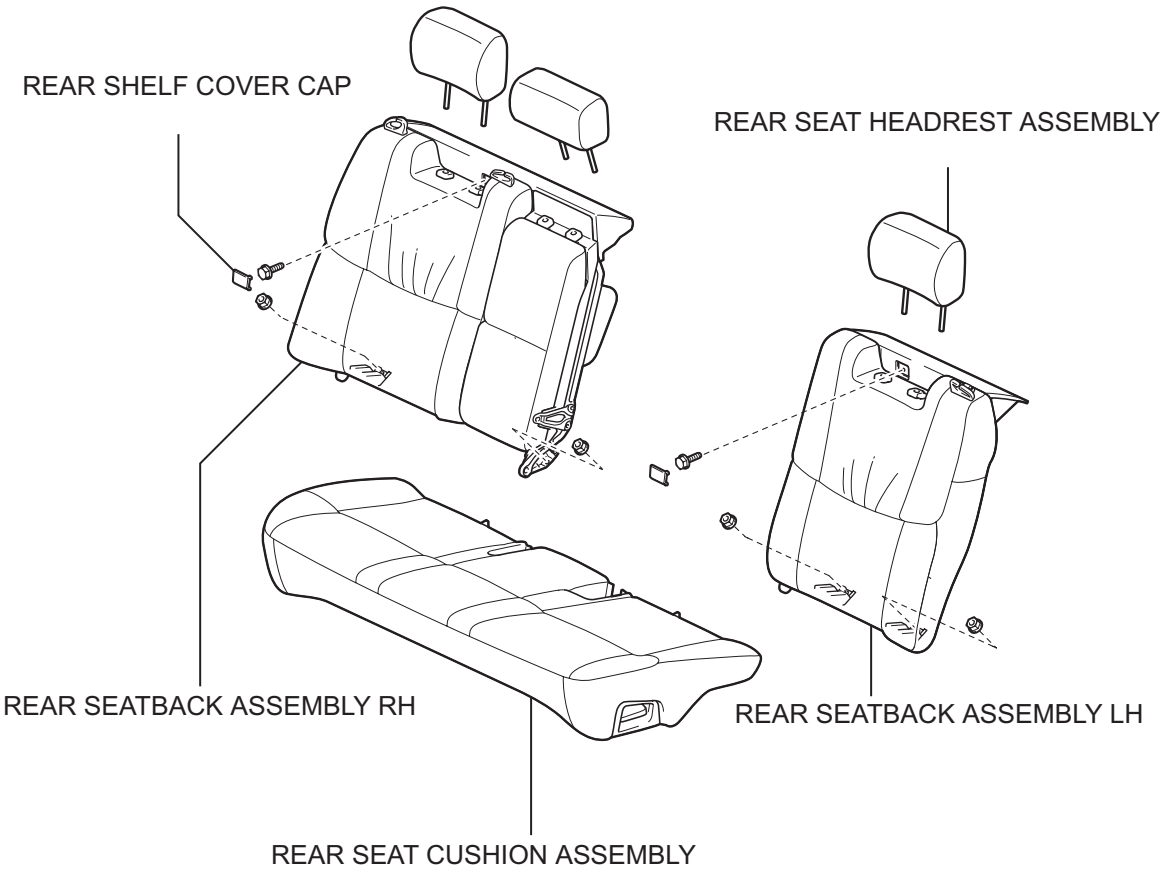

P

C114933E02

REMOVAL

HINT:

- Use the same procedures for the RH side and LH side.
- The procedures listed below are for the LH side.

1. **DISCONNECT CABLE FROM NEGATIVE BATTERY TERMINAL**
   HINT:
   See page RS-1
2. **REMOVE REAR SEAT CUSHION ASSEMBLY (See page SE-68)**
3. **REMOVE REAR SEAT HEADREST ASSEMBLY**
4. **REMOVE REAR SHELF COVER CAP (See page SE-68)**
5. **REMOVE REAR SEATBACK ASSEMBLY LH (See page SE-68)**
6. **REMOVE REAR SEATBACK ASSEMBLY RH (See page SE-69)**
7. **REMOVE REAR DOOR SCUFF PLATE LH (See page IR-12)**
8. **REMOVE REAR DOOR SCUFF PLATE RH (See page IR-12)**
9. **REMOVE REAR DOOR OPENING TRIM WEATHERSTRIP LH**
10. **REMOVE REAR DOOR OPENING TRIM WEATHERSTRIP RH**
11. **REMOVE REAR SEAT SIDE GARNISH LH (See page IR-14)**
12. **REMOVE REAR SEAT SIDE GARNISH RH (See page IR-14)**
13. **REMOVE ROOF SIDE GARNISH ASSEMBLY INNER LH (See page IR-14)**
14. **REMOVE ROOF SIDE GARNISH ASSEMBLY INNER RH (See page IR-14)**
15. **REMOVE PACKAGE TRAY TRIM PANEL ASSEMBLY**
    (a) Remove the bolt and disconnect the rear seat belt assembly outer.
    HINT:
    Use the same procedures for the RH side and LH side.

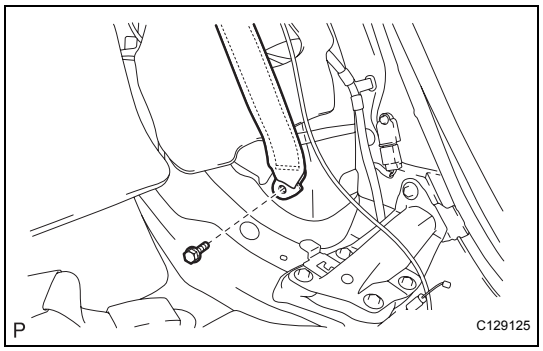

SB

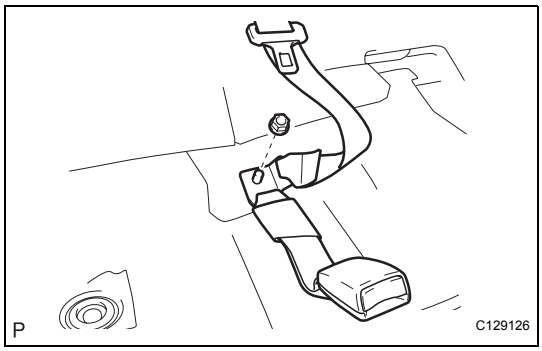

(b) Remove the nut and disconnect the rear seat inner w/ center belt assembly RH.

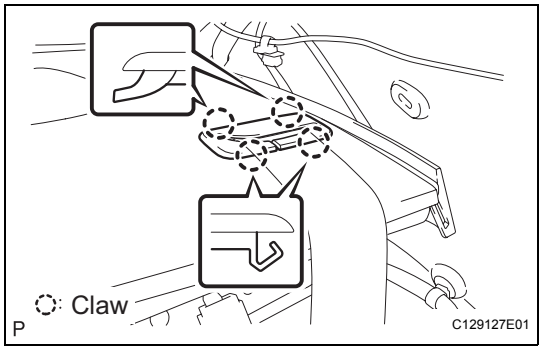

(c) Disengage the 4 claws and the rear seat shoulder belt cover.
HINT:
Use the same procedures for the RH side and LH side.

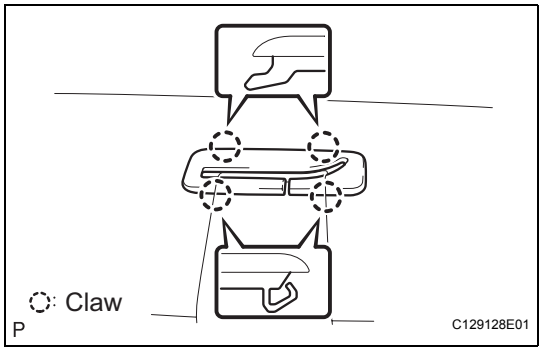

(d) Disengage the 4 claws and the rear seat shoulder belt cover.

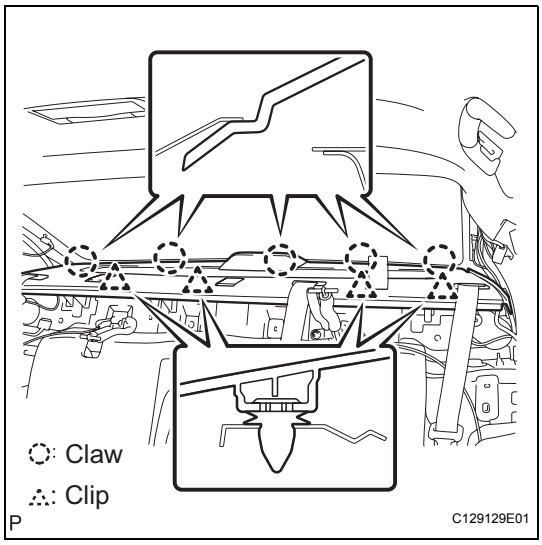

(e) Disengage the 5claws, 4clips, and the package tray panel assembly.
(f) Disconnect the connector and remove the package tray panel assembly.

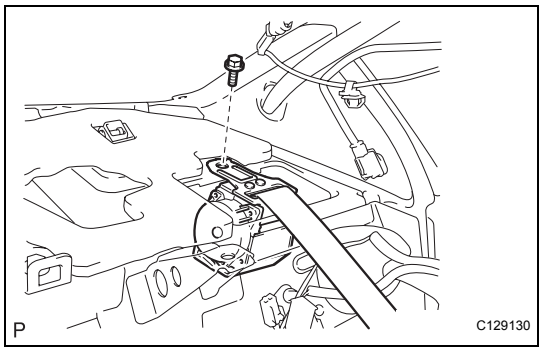

16. REMOVE REAR SEAT BELT ASSEMBLY OUTER

(a) Remove the bolt and the rear seat belt assembly outer.

SB

INSTALLATION

1. INSTALL REAR SEAT BELT ASSEMBLY OUTER

NOTICE:

Do not disassemble the retractor.

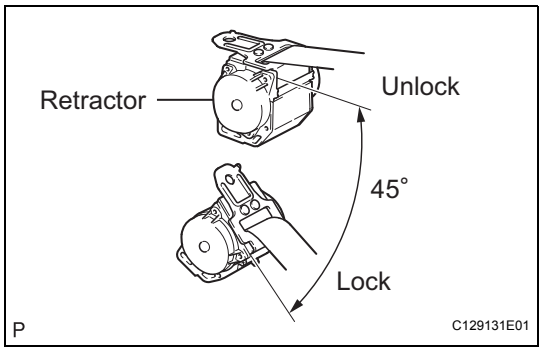

(a) Check the degree of inclination when the belt begins to lock the ELR.

(1) When the inclination of the retractor is 15° or less, check that the belt can be pulled from the retractor. When the inclination of the retractor is over 45°, check that the belt locks.
If operation is not as specified, replace the belt assembly.

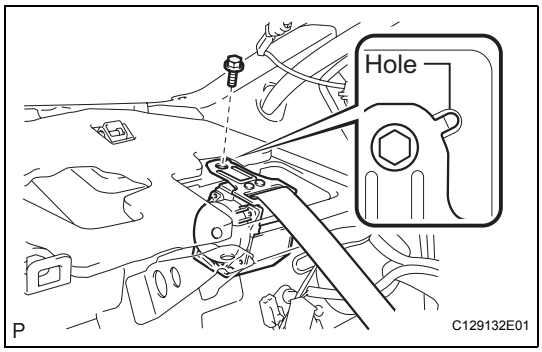

(b) Install the rear seat belt assembly outer with the bolt.
Torque: 42 N*m (428 kgf*cm, 31 ft.*lbf)

2. INSTALL PACKAGE TRAY TRIM PANEL ASSEMBLY

(a) Connect the connector.

(b) Engage the 5 claws and the 4 clips and install the package tray panel assembly.

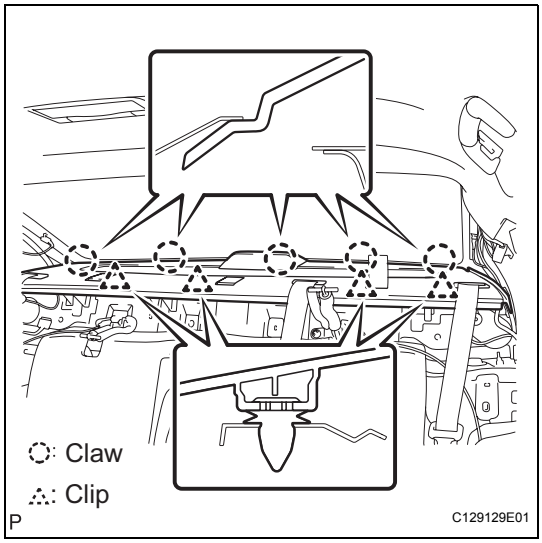

(c) Engage the 4 claws and install the rear seat shoulder belt cover.

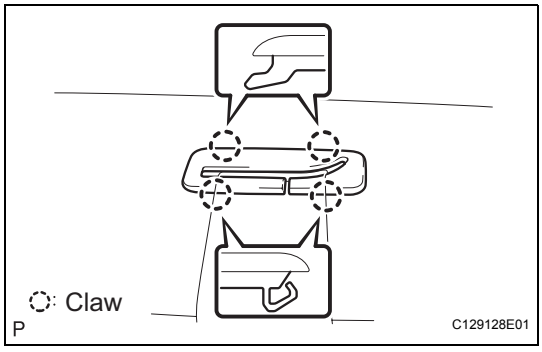

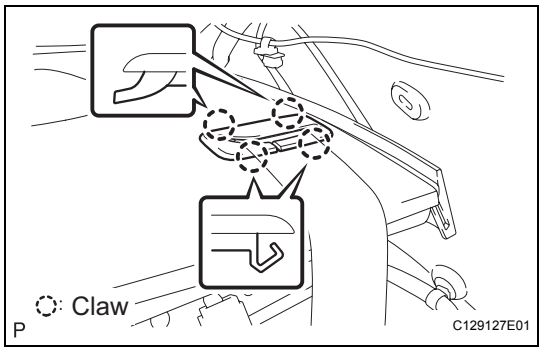

(d) Engage the 4 claws and the rear seat shoulder belt cover.
HINT:
Use the same procedures for the RH side and LH side.

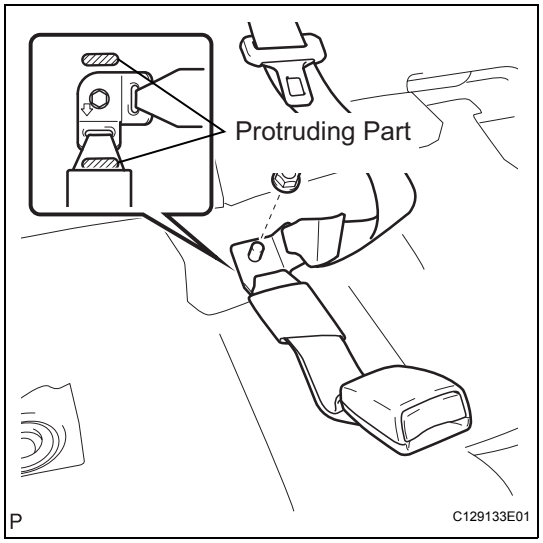

(e) Install the rear seat inner w/ center belt assembly RH with the nut.
Torque: 42 N*m (428 kgf*cm, 31 ft.*lbf)
NOTICE:
- **Do not overlap the anchor part of the rear belt and the protruding parts of the rear seat adjuster.**
- **Make sure arrow is pointing towards the front of the vehicle.**

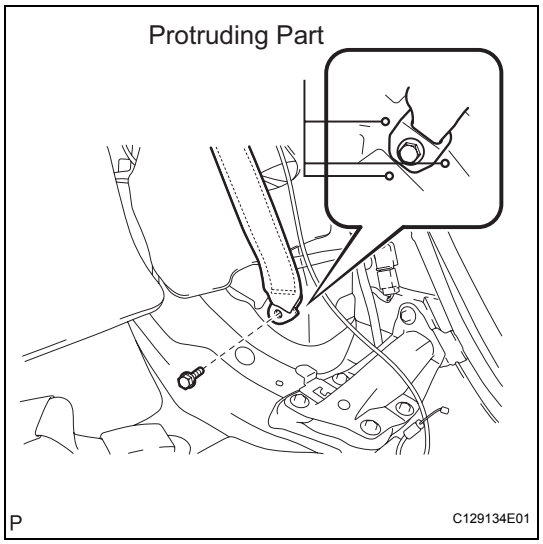

(f) Install the rear seat belt assembly outer with the bolt.
Torque: 42 N*m (428 kgf*cm, 31 ft.*lbf)
NOTICE:
Do not overlap the anchor part of the rear belt and the protruding parts of the rear seat adjuster.
HINT:
Use the same procedures for the RH side and LH side.

(g) Check if the ELR locks.
NOTICE:
The check should be performed with the outer belt assembly installed.
(1) With the belt assembly installed, check that the belt locks when it is pulled out quickly.
If operation is not as specified, replace the belt assembly.

3. **INSTALL ROOF SIDE GARNISH ASSEMBLY INNER LH (See page IR-19)**
4. **INSTALL ROOF SIDE GARNISH ASSEMBLY INNER RH (See page IR-19)**
5. **INSTALL REAR SEATBACK ASSEMBLY RH (See page SE-76)**

6. **INSTALL REAR SEATBACK ASSEMBLY LH (See page SE-77)**
7. **INSTALL REAR SEAT CUSHION ASSEMBLY**
8. **CONNECT CABLE TO NEGATIVE BATTERY TERMINAL**
9. **PERFORM INITIALIZATION**
   HINT:
   See page IN-29
10. **INSPECT SRS WARNING LIGHT**
    HINT:
    See page RS-28

REAR CENTER SEAT INNER BELT ASSEMBLY

COMPONENTS

SB

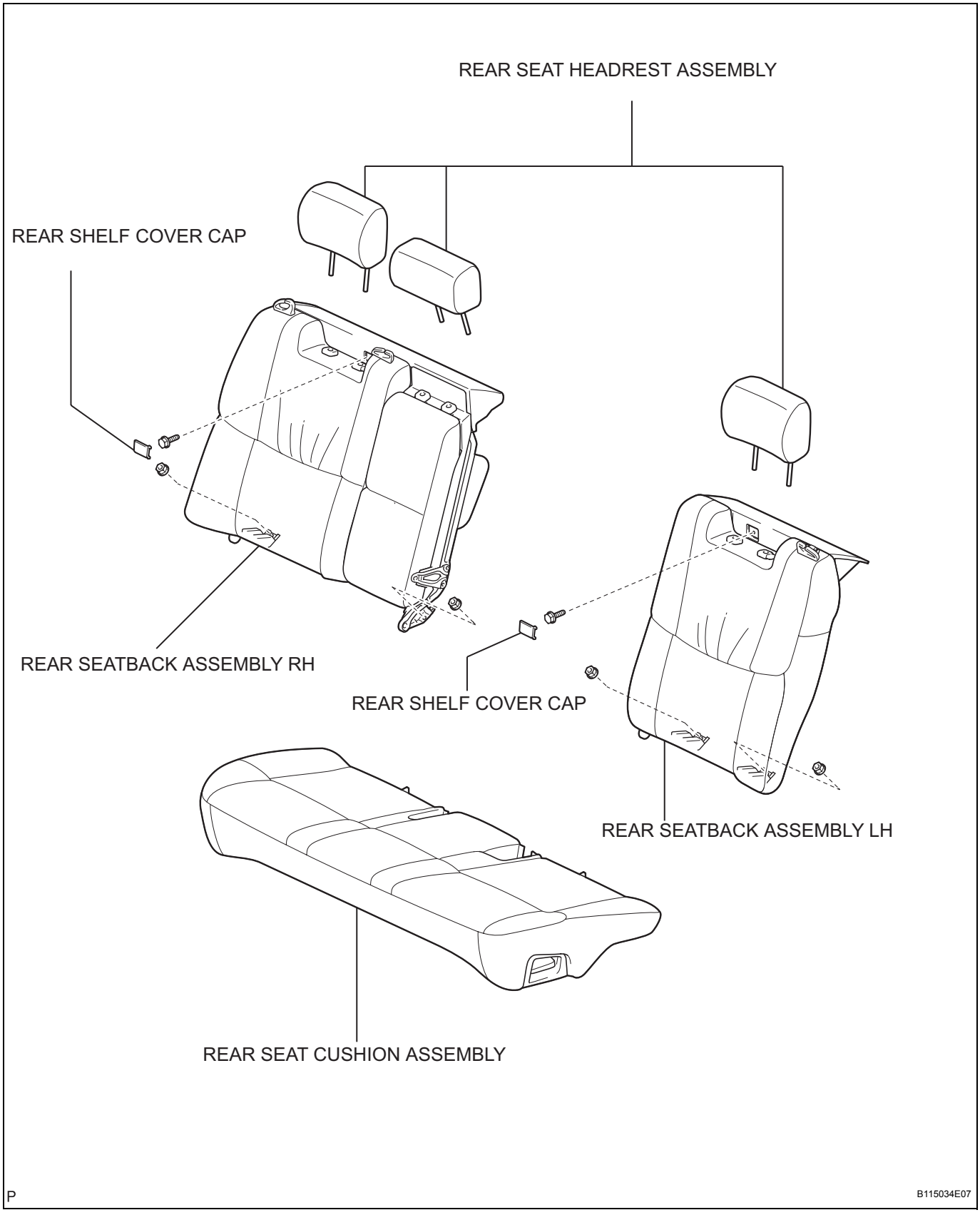

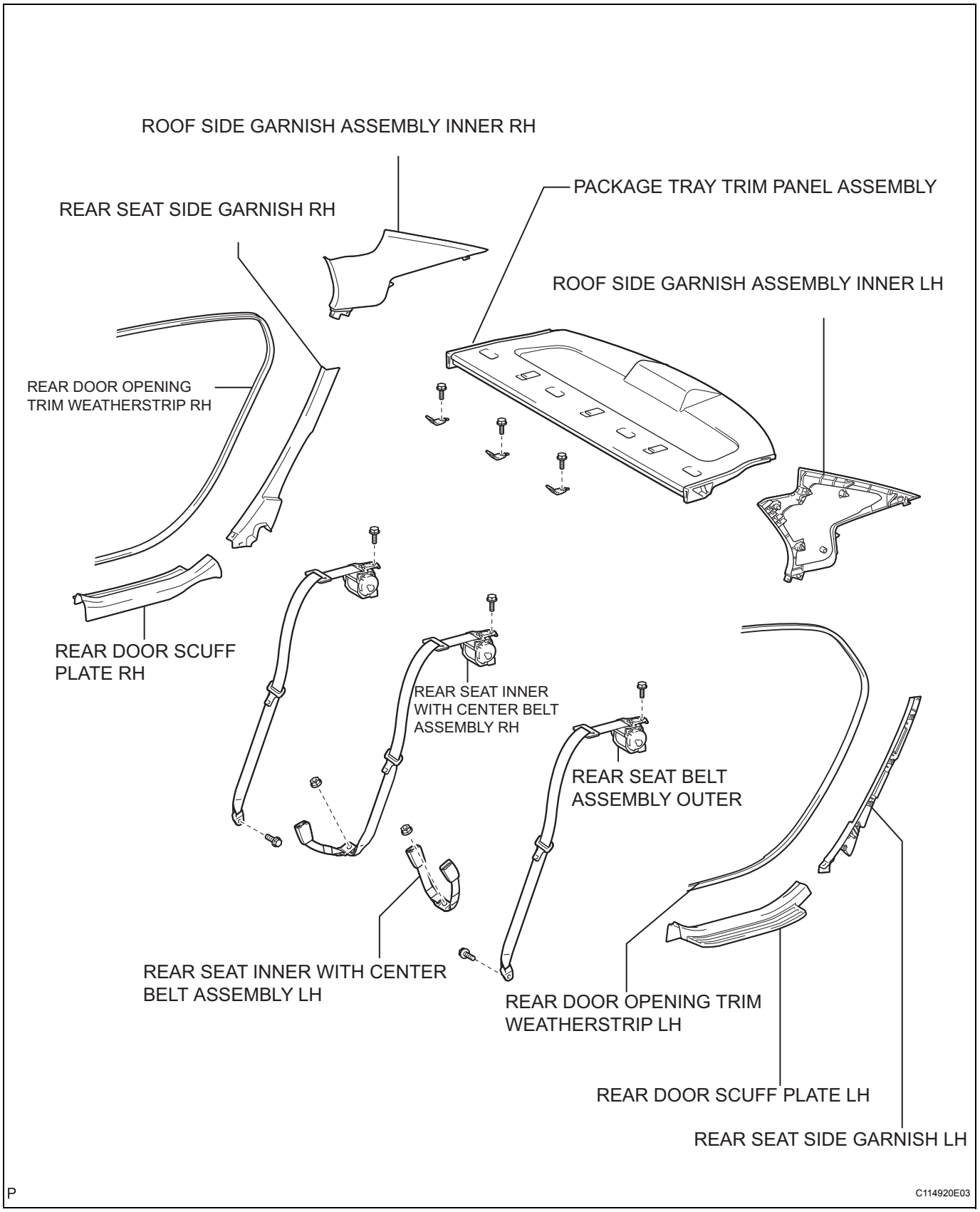
ROOF SIDE GARNISH ASSEMBLY INNER RH
REAR SEAT SIDE GARNISH RH
PACKAGE TRAY TRIM PANEL ASSEMBLY
ROOF SIDE GARNISH ASSEMBLY INNER LH
REAR DOOR OPENING TRIM WEATHERSTRIP RH
REAR DOOR SCUFF PLATE RH
REAR SEAT INNER WITH CENTER BELT ASSEMBLY RH
REAR SEAT BELT ASSEMBLY OUTER
REAR SEAT INNER WITH CENTER BELT ASSEMBLY LH
REAR DOOR OPENING TRIM WEATHERSTRIP LH
REAR DOOR SCUFF PLATE LH
REAR SEAT SIDE GARNISH LH
P
C114920E03

SB

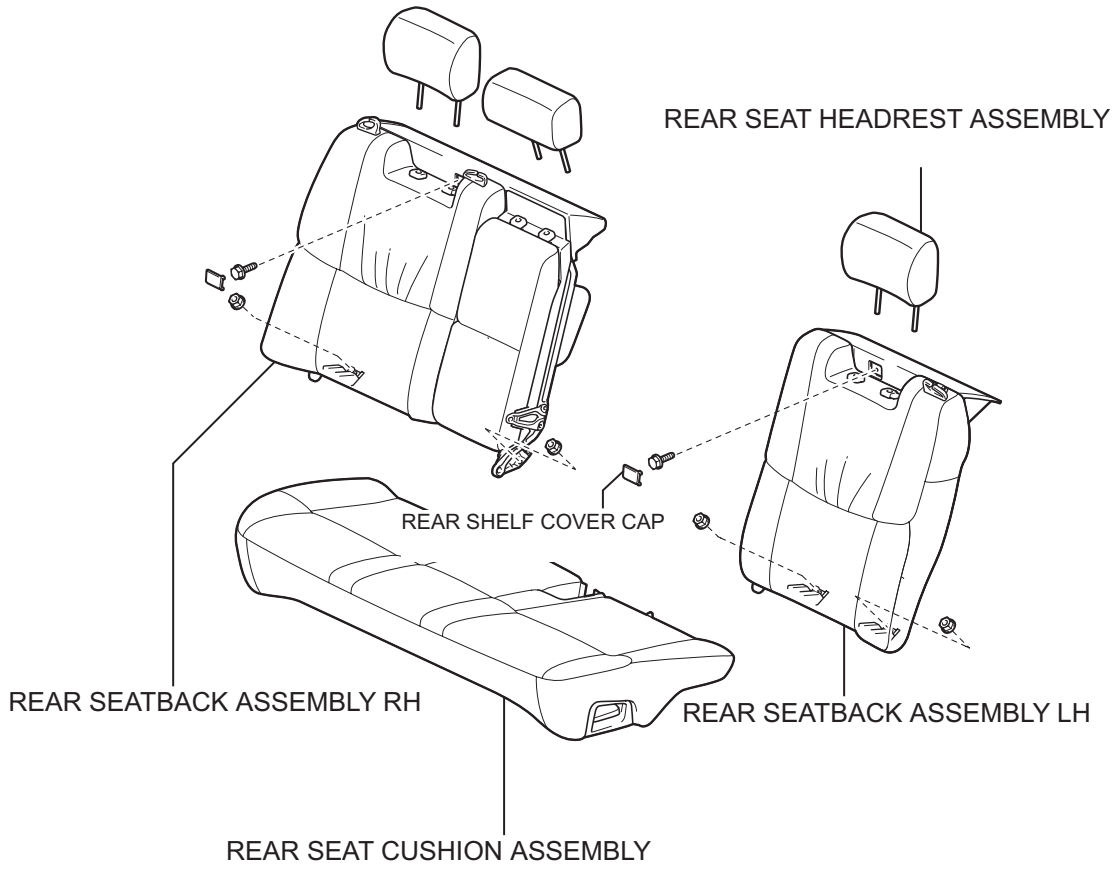

P

C114933E03

REMOVAL

HINT:

- The installation procedures are the removal procedures in reverse order. However, only installation procedures requiring additional information are included.
- Use the same procedures for the RH side and LH side.
- The procedures listed below are for the LH side.

1. **DISCONNECT BATTERY NEGATIVE TERMINAL**
   HINT:
   See page RS-1
2. **REMOVE REAR SEAT CUSHION ASSEMBLY (See page SE-68)**
3. **REMOVE REAR SEAT HEADREST ASSEMBLY**
4. **REMOVE REAR SHELF COVER CAP (See page SE-68)**
5. **REMOVE REAR SEATBACK ASSEMBLY LH (See page SE-68)**
6. **REMOVE REAR SEATBACK ASSEMBLY RH (See page SE-69)**
7. **REMOVE REAR DOOR SCUFF PLATE LH (See page IR-12)**
8. **REMOVE REAR DOOR SCUFF PLATE RH (See page IR-12)**
9. **REMOVE REAR DOOR OPENING TRIM WEATHERSTRIP LH**
10. **REMOVE REAR DOOR OPENING TRIM WEATHERSTRIP RH**
11. **REMOVE REAR SEAT SIDE GARNISH LH (See page IR-14)**
12. **REMOVE REAR SEAT SIDE GARNISH RH (See page IR-14)**
13. **REMOVE ROOF SIDE GARNISH ASSEMBLY INNER LH (See page IR-14)**
14. **REMOVE ROOF SIDE GARNISH ASSEMBLY INNER RH (See page IR-14)**
15. **REMOVE PACKAGE TRAY TRIM PANEL ASSEMBLY**
    (a) Remove the bolt and disconnect the rear seat belt assembly outer.
    HINT:
    Use the same procedures for the RH side and LH side.

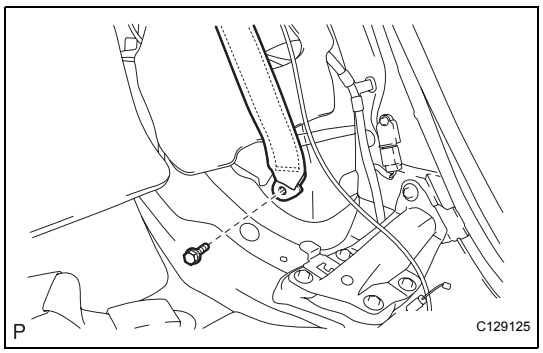

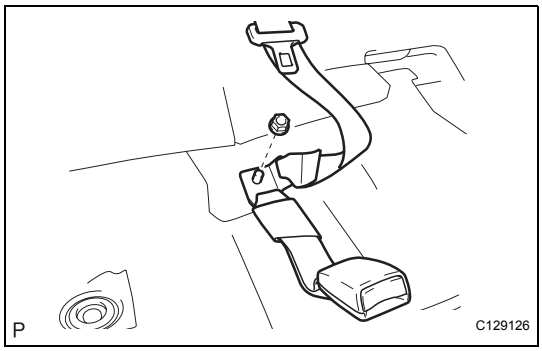

(b) Remove the nut and disconnect the rear seat inner w/ center belt assembly RH.

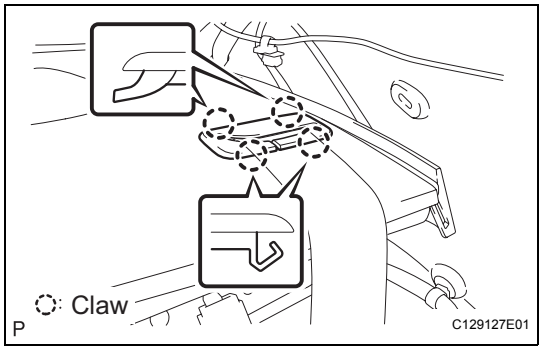

(c) Disengage the 4 claws and the rear seat shoulder belt cover.
HINT:
Use the same procedures for the RH side and LH side.

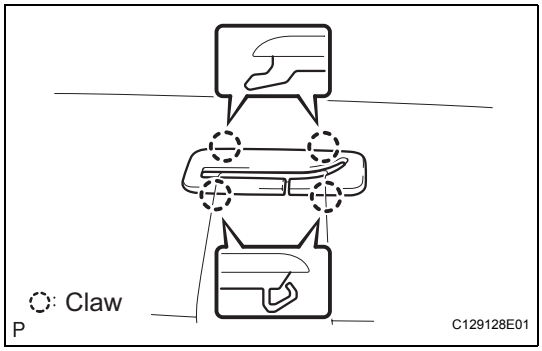

(d) Disengage the 4 claws and the rear seat shoulder belt cover.

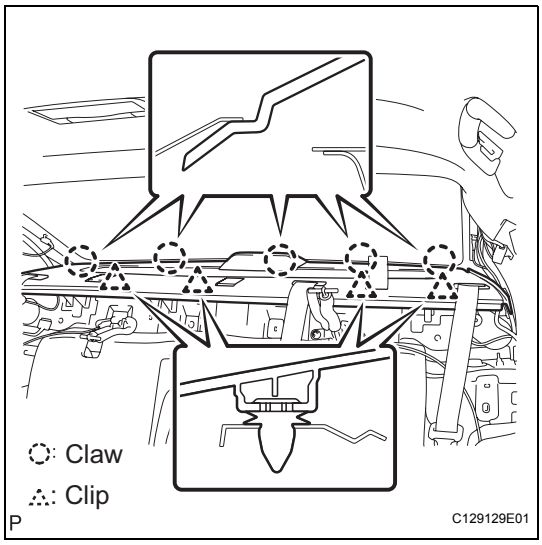

(e) Disengage the 5 claws, 4 clips, and the package tray panel assembly.
(f) Disconnect the connector and remove the package tray panel assembly.

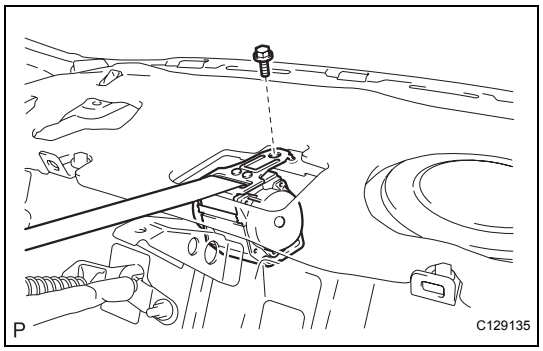

16. REMOVE REAR SEAT INNER WITH CENTER BELT ASSEMBLY RH

(a) Remove the bolt and the rear seat inner w/ center belt assembly RH.

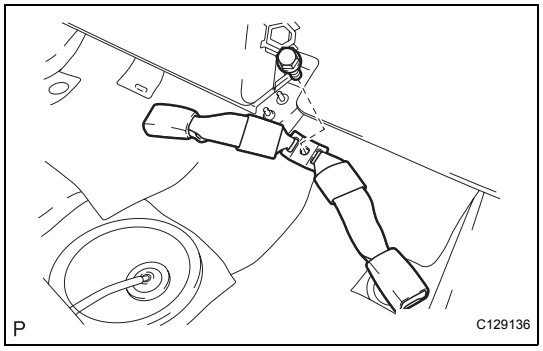

17. REMOVE REAR SEAT INNER WITH CENTER BELT ASSEMBLY LH

(a) Remove the bolt and remove the rear seat inner w/ center belt assembly LH.

INSTALLATION

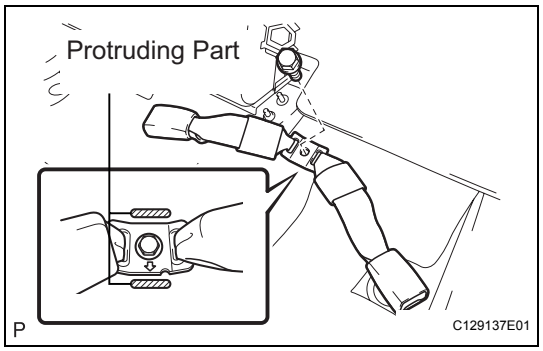

1. INSTALL REAR SEAT INNER WITH CENTER BELT ASSEMBLY LH

(a) Install the rear seat inner w/ center belt assembly LH with the bolt.

Torque: 42 N*m (428 kgf*cm, 31 ft.*lbf)

NOTICE:

- **Do not overlap the anchor part of the rear belt and the protruding parts of the rear seat adjuster.**
- **Make sure arrow is pointing towards the front of the vehicle.**

2. INSTALL REAR SEAT INNER WITH CENTER BELT ASSEMBLY RH

NOTICE:

Do not disassemble the retractor.

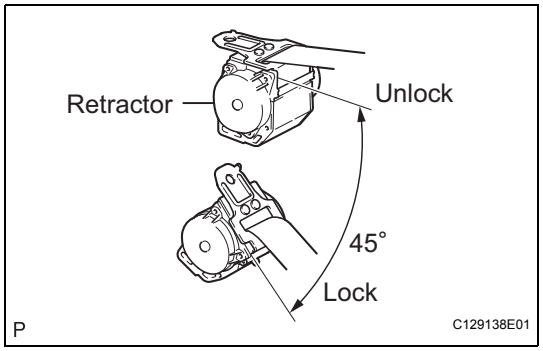

(a) Check the degree of inclination when the belt begins to lock the ELR.

(1) When the inclination of the retractor is 15° or less, check that the belt can be pulled from the retractor. When the inclination of the retractor is over 45°, check that the belt locks.

If operation is not as specified, replace the belt assembly.

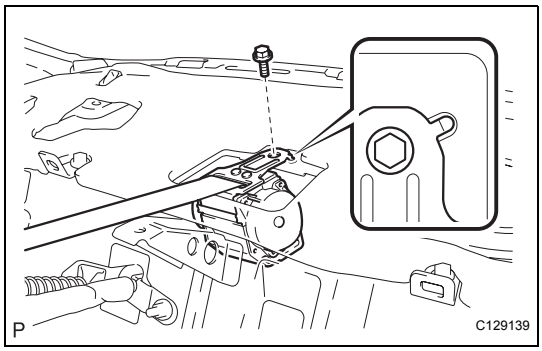

(b) Install the rear seat inner w/ center belt assembly RH with the bolt.
Torque: 42 N*m (428 kgf*cm, 31 ft.*lbf)

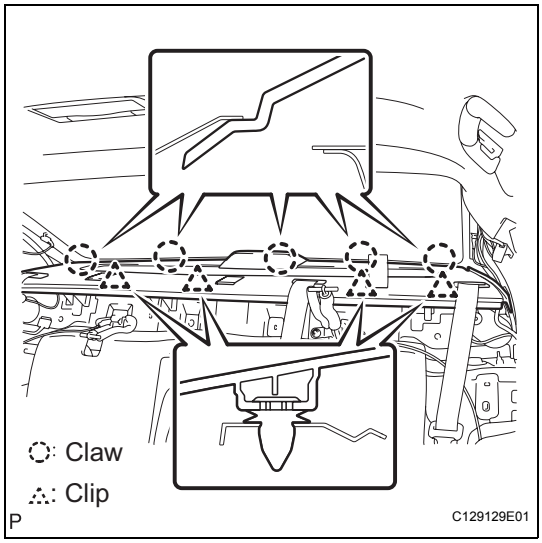

3. INSTALL PACKAGE TRAY TRIM PANEL ASSEMBLY

(a) Connect the connector.

(b) Engage the 5 claws and the 4 clips and install the package tray panel assembly.

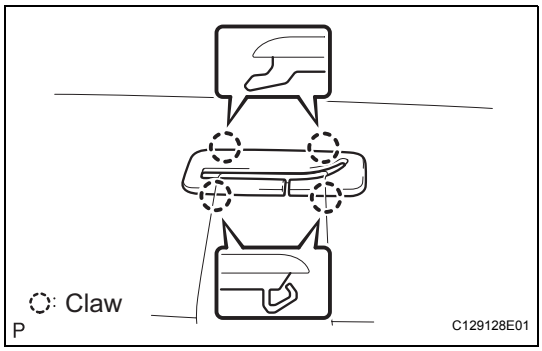

(c) Engage the 4 claws and install the rear seat shoulder belt cover.

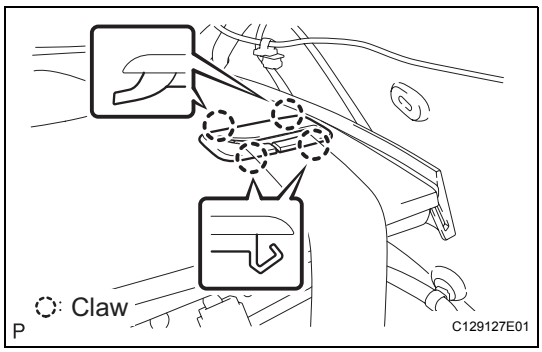

(d) Engage the 4 claws and the rear seat shoulder belt cover.
HINT:
Use the same procedures for the RH side and LH side.

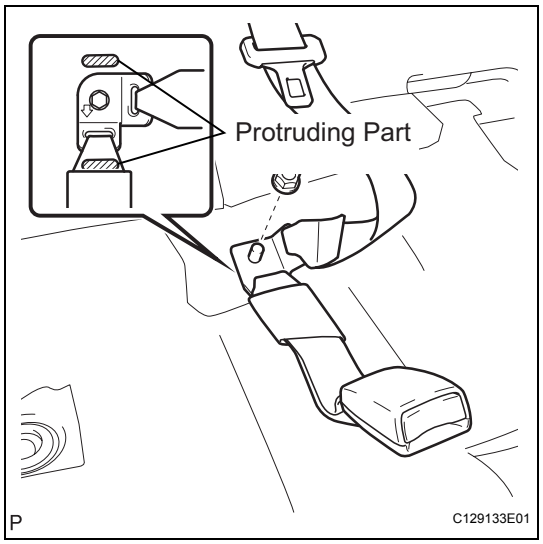

(e) Install the rear seat inner w/ center belt assembly RH with the nut.
Torque: 42 N*m (428 kgf*cm, 31 ft.*lbf)
NOTICE:
- **Do not overlap the anchor part of the rear belt and the protruding parts of the rear seat adjuster.**
- **Make sure arrow is pointing towards the front of the vehicle.**

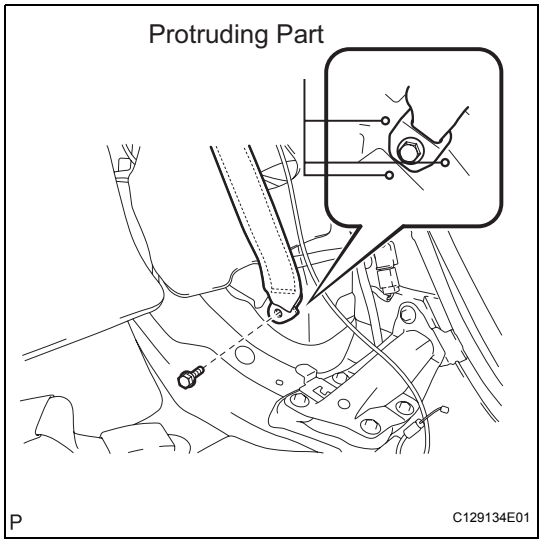

(f) Install the rear seat belt assembly outer with the bolt.
Torque: 42 N*m (428 kgf*cm, 31 ft.*lbf)
NOTICE:
Do not overlap the anchor part of the rear belt and the protruding parts of the rear seat adjuster.
HINT:
Use the same procedures for the RH side and LH side.

(g) Check if the ELR locks.
NOTICE:
The check should be performed with the outer belt assembly installed.
(1) With the belt assembly installed, check that the belt locks when it is pulled out quickly.
If operation is not as specified, replace the belt assembly.

4. **INSTALL ROOF SIDE GARNISH ASSEMBLY INNER LH (See page IR-19)**
5. **INSTALL ROOF SIDE GARNISH ASSEMBLY INNER RH (See page IR-19)**
6. **INSTALL REAR SEATBACK ASSEMBLY RH (See page SE-76)**
7. **INSTALL REAR SEATBACK ASSEMBLY LH (See page SE-77)**
8. **REMOVE REAR SEAT CUSHION ASSEMBLY**
9. **CONNECT CABLE TO NEGATIVE BATTERY TERMINAL**
10. **PERFORM INITIALIZATION**
HINT:
See page IN-29

SB

11. INSPECT SRS WARNING LIGHT

HINT:

See page RS-28

CHILD RESTRAINT SEAT ANCHOR BRACKET

COMPONENTS

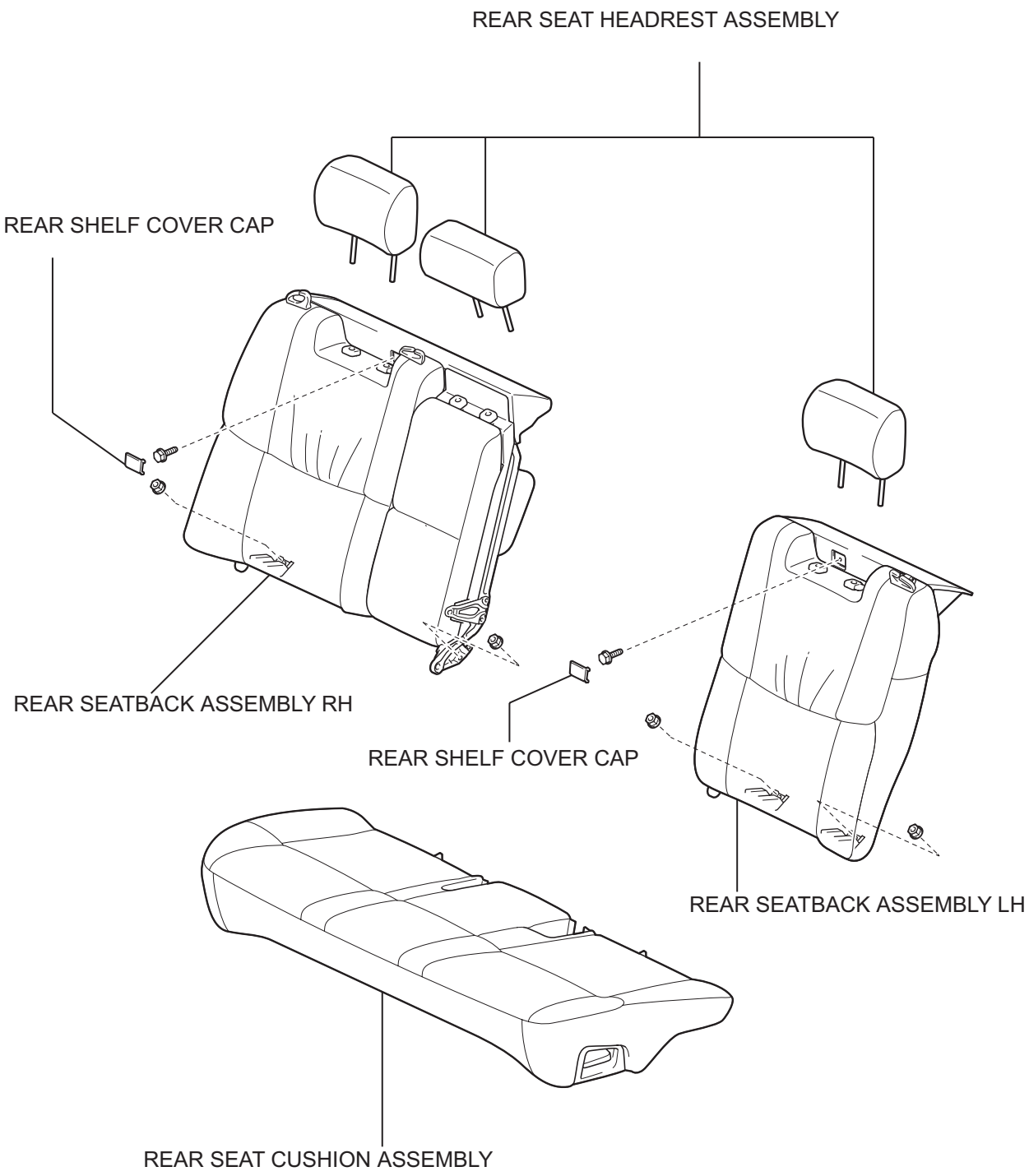

SB

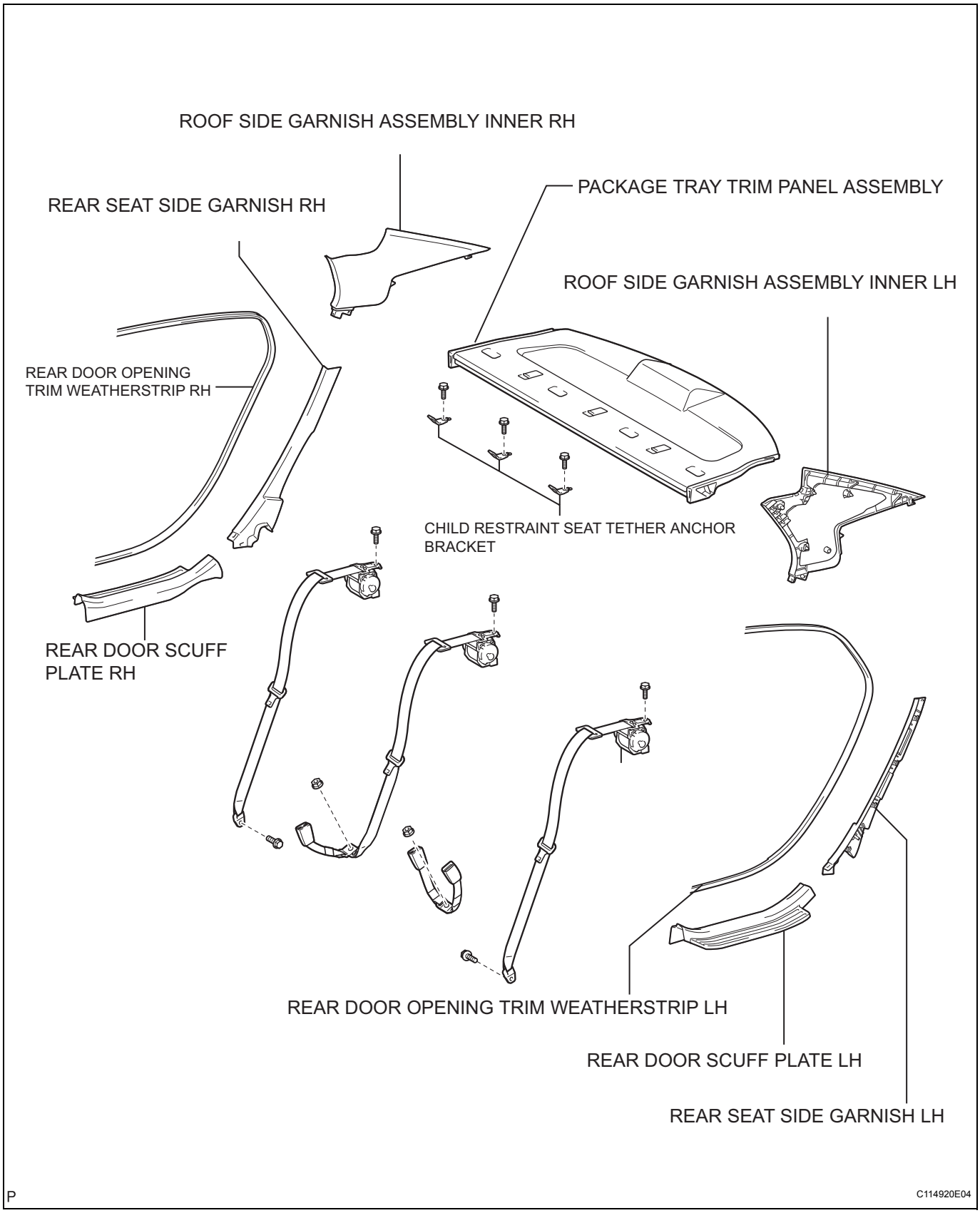

P

C114920E04

SB

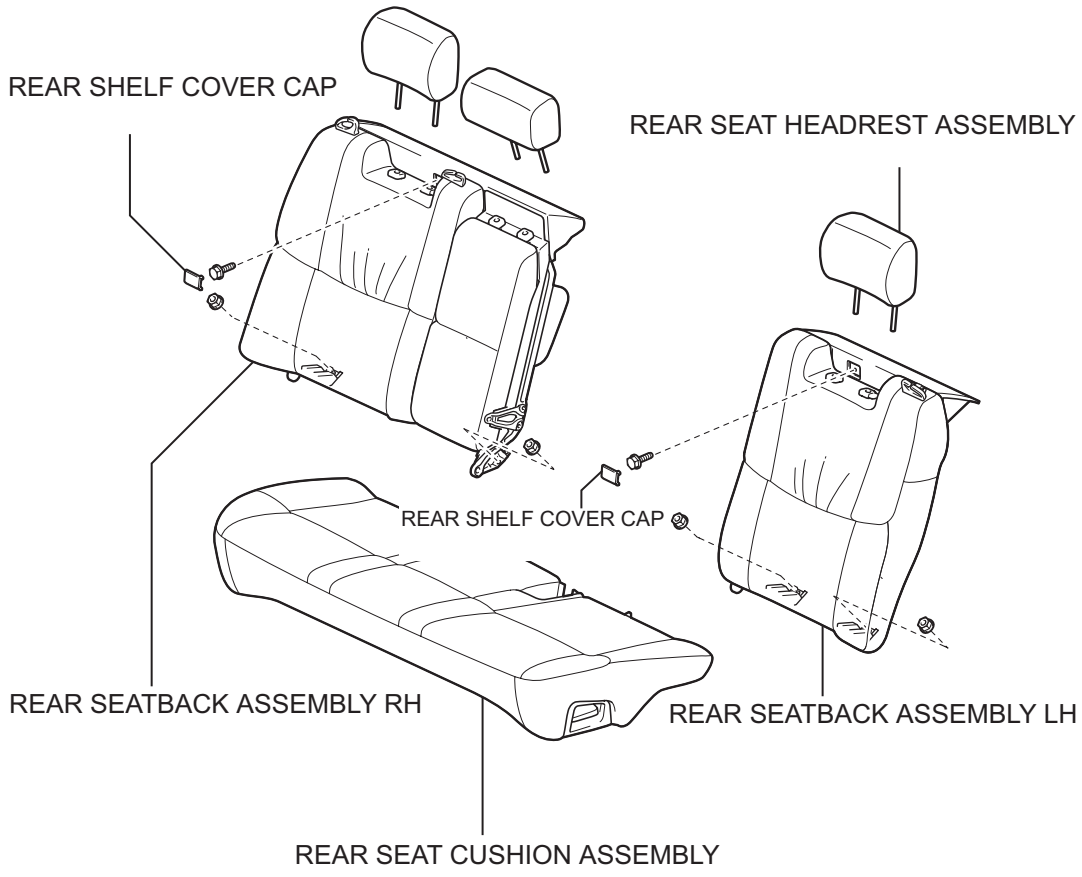

P

C114933E04

SB

REMOVAL

HINT:
The procedures listed below are for the LH side.

1. **DISCONNECT CABLE FROM NEGATIVE BATTERY TERMINAL**
   HINT:
   See page RS-1
2. **REMOVE REAR SEAT CUSHION ASSEMBLY (See page SE-68)**
3. **REMOVE REAR SEAT HEADREST ASSEMBLY**
4. **REMOVE REAR SHELF COVER CAP (See page SE-68)**
5. **REMOVE REAR SEATBACK ASSEMBLY LH (See page SE-68)**
6. **REMOVE REAR SEATBACK ASSEMBLY RH (See page SE-69)**
7. **REMOVE REAR DOOR SCUFF PLATE LH (See page IR-12)**
8. **REMOVE REAR DOOR SCUFF PLATE RH (See page IR-12)**
9. **REMOVE REAR DOOR OPENING TRIM WEATHERSTRIP LH**
10. **REMOVE REAR DOOR OPENING TRIM WEATHERSTRIP RH**
11. **REMOVE REAR SEAT SIDE GARNISH LH (See page IR-14)**
12. **REMOVE REAR SEAT SIDE GARNISH RH (See page IR-14)**
13. **REMOVE ROOF SIDE GARNISH ASSEMBLY INNER LH (See page IR-14)**
14. **REMOVE ROOF SIDE GARNISH ASSEMBLY INNER RH (See page IR-14)**
15. **REMOVE PACKAGE TRAY TRIM PANEL ASSEMBLY**
    (a) Remove the bolt and disconnect the rear seat belt assembly outer.
    HINT:
    Use the same procedures for the RH side and LH side.

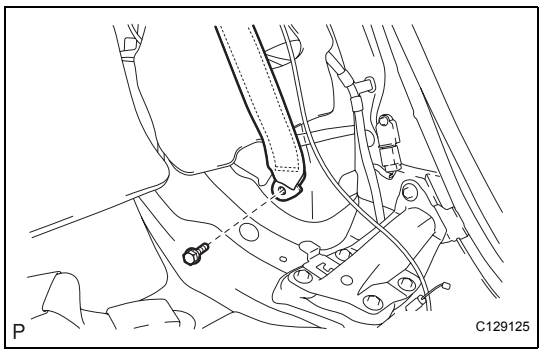

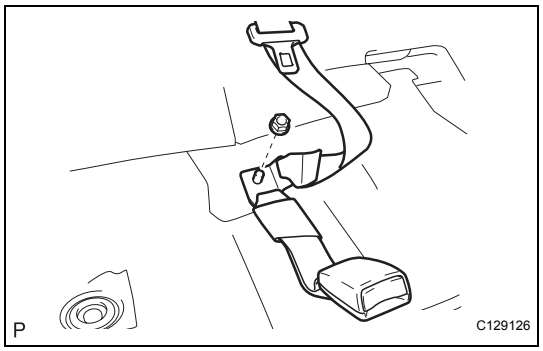

(b) Remove the nut and disconnect the rear seat inner w/ center belt assembly RH.

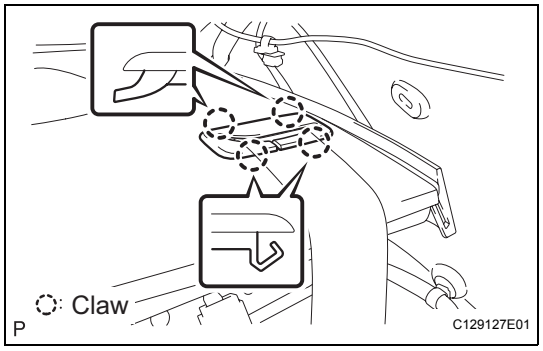

(c) Disengage the 4 claws and the rear seat shoulder belt cover.
HINT:
Use the same procedures for the RH side and LH side.

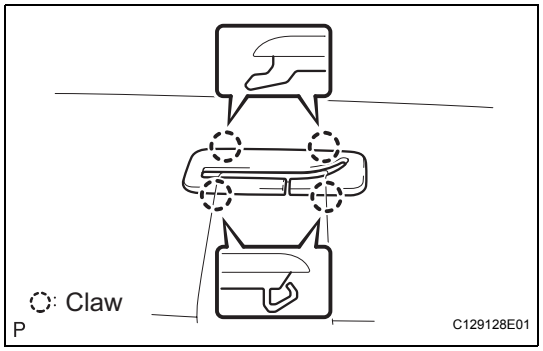

(d) Disengage the 4 claws and the rear seat shoulder belt cover.

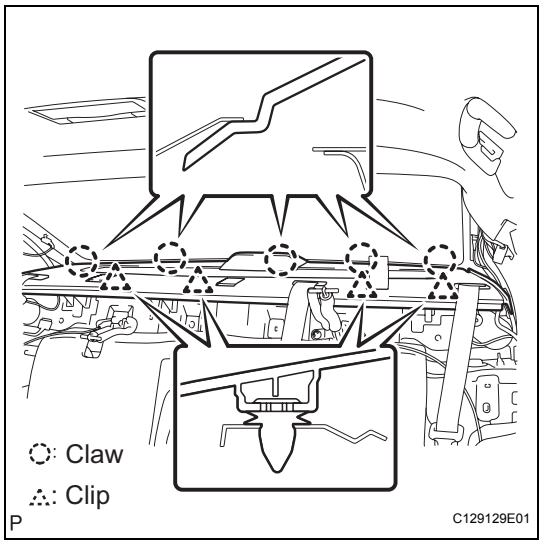

(e) Disengage the 5 claws, 4 clips, and the package tray panel assembly.
(f) Disconnect the connector and remove the package tray panel assembly.

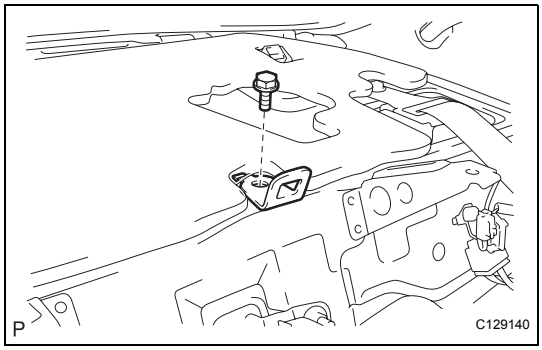

16. REMOVE CHILD RESTRAINT SEAT TETHER ANCHOR BRACKET

(a) Remove the bolt and the child restraint seat tether anchor bracket.

INSTALLATION

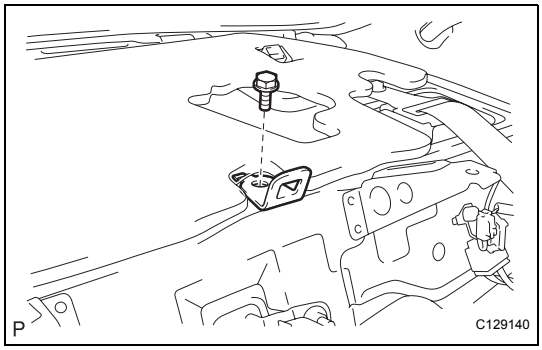

1. INSTALL CHILD RESTRAINT SEAT TETHER ANCHOR BRACKET

(a) Install the child restraint seat tether anchor bracket with the bolt.
Torque: 42 N*m (428 kgf*cm, 31 ft.*lbf)

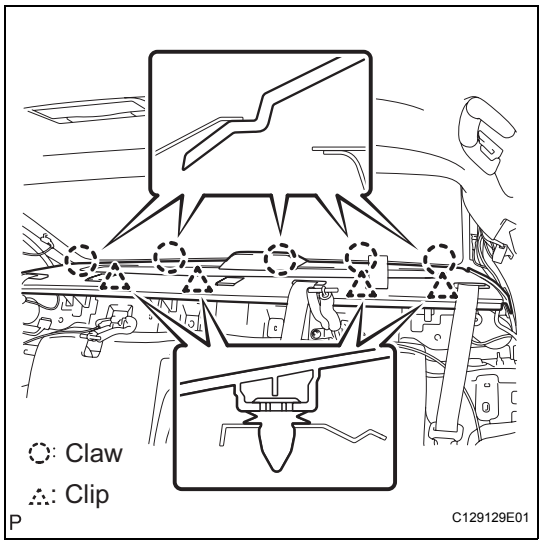

2. INSTALL PACKAGE TRAY TRIM PANEL ASSEMBLY

(a) Connect the connector.

(b) Engage the 5 claws and the 4 clips and install the package tray panel assembly.

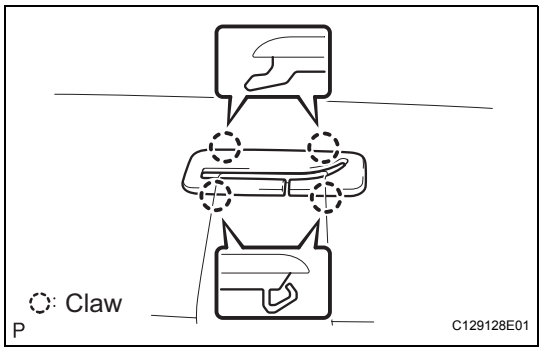

(c) Engage the 4 claws and install the rear seat shoulder belt cover.

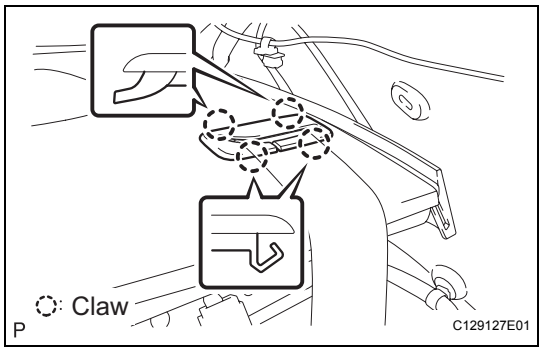

(d) Engage the 4 claws and the rear seat shoulder belt cover.
HINT:
Use the same procedures for the RH side and LH side.

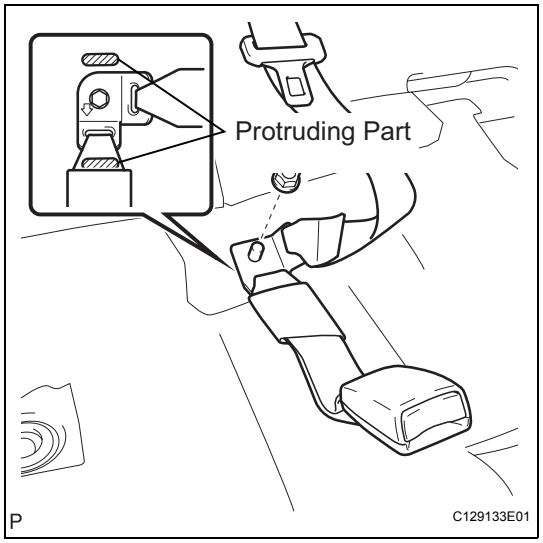

(e) Install the rear seat inner w/ center belt assembly RH with the nut.
Torque: 42 N*m (428 kgf*cm, 31 ft.*lbf)
NOTICE:
- **Do not overlap the anchor part of the rear belt and the protruding parts of the rear seat adjuster.**
- **Make sure arrow is pointing towards the front of the vehicle.**

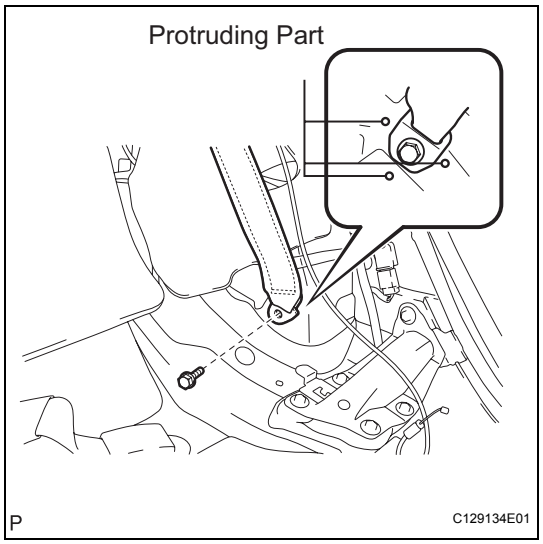

(f) Install the rear seat belt assembly outer with the bolt.
Torque: 42 N*m (428 kgf*cm, 31 ft.*lbf)
NOTICE:
Do not overlap the anchor part of the rear belt and the protruding parts of the rear seat adjuster.
HINT:
Use the same procedures for the RH side and LH side.

(g) Check if the ELR locks.
NOTICE:
The check should be performed with the outer belt assembly installed.
(1) With the belt assembly installed, check that the belt locks when it is pulled out quickly.
If operation is not as specified, replace the belt assembly.

3. **INSTALL ROOF SIDE GARNISH ASSEMBLY INNER LH (See page IR-19)**
4. **INSTALL ROOF SIDE GARNISH ASSEMBLY INNER RH (See page IR-19)**
5. **INSTALL REAR SEATBACK ASSEMBLY RH (See page SE-76)**

6. **INSTALL REAR SEATBACK ASSEMBLY LH (See page SE-77)**
7. **INSTALL REAR SEAT CUSHION ASSEMBLY**
8. **CONNECT CABLE TO NEGATIVE BATTERY TERMINAL**
9. **PERFORM INITIALIZATION**
   HINT:
   See page IN-29
10. **INSPECT SRS WARNING LIGHT**
    HINT:
    See page RS-28

STANDARD BOLT

HOW TO DETERMINE BOLT STRENGTH

Bolt Type

Hexagon Head Bolt			Stud Bolt	Weld Bolt	Class
Normal Recess Bolt		Deep Recess Bolt			
				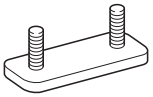	4T
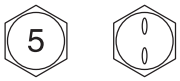					5T
					6T
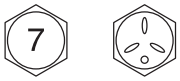		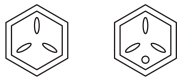			7T
					8T
					9T
					10T
					11T

SS

SPECIFIED TORQUE FOR STANDARD BOLTS

Class	Diameter (mm)	Pitch (mm)	Specified torque					
			Hexagon head bolt			Hexagon flange bolt		
			N*m	kgf*cm	ft.*lbf	N*m	kgf*cm	ft.*lbf
4T	6	1	5	55	48 in.*lbf	6	60	52 in.*lbf
	8	1.25	12.5	130	9	14	145	10
	10	1.25	26	260	19	29	290	21
	12	1.25	47	480	35	53	540	39
	14	1.5	74	760	55	84	850	61
	16	1.5	115	1,150	83	-	-	-
5T	6	1	6.5	65	56 in.*lbf	7.5	75	65 in.*lbf
	8	1.25	15.5	160	12	17.5	175	13
	10	1.25	32	330	24	36	360	26
	12	1.25	59	600	43	65	670	48
	14	1.5	91	930	67	100	1,050	76
	16	1.5	140	1,400	101	-	-	-
6T	6	1	8	80	69 in.*lbf	9	90	78 in.*lbf
	8	1.25	19	195	14	21	210	15
	10	1.25	39	400	29	44	440	32
	12	1.25	71	730	53	80	810	59
	14	1.5	110	1,100	80	125	1,250	90
	16	1.5	170	1,750	127	-	-	-
7T	6	1	10.5	110	8	12	120	9
	8	1.25	25	260	19	28	290	21
	10	1.25	52	530	38	58	590	43
	12	1.25	95	970	70	105	1,050	76
	14	1.5	145	1,500	108	165	1,700	123
	16	1.5	230	2,300	166	-	-	-
8T	8	1.25	29	300	22	33	330	24
	10	1.25	61	620	45	68	690	50
	12	1.25	110	1,100	80	120	1,250	90
9T	8	1.25	34	340	25	37	380	27
	10	1.25	70	710	51	78	790	57
	12	1.25	125	1,300	94	140	1,450	105
10T	8	1.25	38	390	28	42	430	31
	10	1.25	78	800	58	88	890	64
	12	1.25	140	1,450	105	155	1,600	116
11T	8	1.25	42	430	31	47	480	35
	10	1.25	87	890	64	97	990	72
	12	1.25	155	1,600	116	175	1,800	130

HOW TO DETERMINE NUT STRENGTH

Nut Type

Present Standard Hexagon Nut	Old Standard Hexagon Nut		Class
	Cold Forging Nut	Cutting Processed Nut	
No Mark 			4N
No Mark (w/ Washer) 	No Mark (w/ Washer) 	No Mark 	5N (4T)
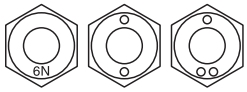			6N
	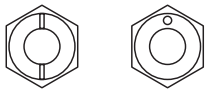	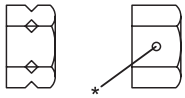	7N (5T)
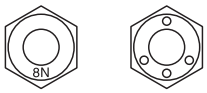			8N
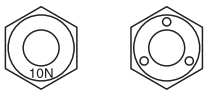	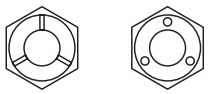	No Mark 	10N (7T)
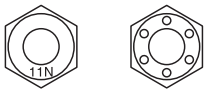			11N
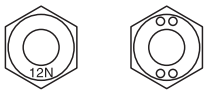			12N

HINT:
- *: Nut with 1 or more marks on one side surface of the nut.
- Use the nut with the same number of the nut strength classification or greater than the bolt strength classification number when tightening parts with a bolt and nut.

Example:
- Bolt = 4T
- Nut = 4N or more

2GR-FE ENGINE CONTROL SYSTEM

SERVICE DATA

Throttle body		
	Standard throttle valve opening percentage	60% or more
Intake air flow meter assembly		
Resistance	4 (THA) - 5 (E2)	
	at -20°C (-4°F)	13.6 to 18.4 kΩ
	at 20°C (68°F)	2.21 to 2.69 kΩ
	at 60°C (140°F)	0.493 to 0.667 kΩ
Camshaft timing oil control valve assembly		
Resistance	at 20°C (68°F)	6.9 to 7.9 Ω
Throttle body assembly		
Resistance	at 20°C (68°F)	
	2 (M+) - 1 (M-)	0.3 to 100 kΩ
	5 (VC) - 3 (E2)	1.2 to 3.2 kΩ
E.F.I. engine coolant temperature sensor		
Resistance	Approx. 20°C (68°F)	2.32 to 2.59 kΩ
	Approx. 80°C (176°F)	0.310 to 0.326 kΩ
Knock sensor		
Resistance	at 20°C (68°F)	120 to 280 kΩ
Circuit opening relay (engine room junction block assembly)		
Specified condition	1D-5 - 1D-3	10 kΩ or higher
	1D-5 - 1D-3	Below 1 Ω
		(when battery voltage is applied to terminals 1G-5 and 1H-9)
EFI relay (engine room junction block assembly)		
Specified condition	1D-4 - 1D-6	10 kΩ or higher
	1D-4 - 1D-6	Below 1 Ω
		(when battery voltage is applied to terminals 1H-10 and 1H-2)
A/F relay (engine room junction block assembly)		
Specified condition	1F-1 - 1C-6	10 kΩ or higher
	1F-1 - 1C-6	Below 1 Ω
		(when battery voltage is applied to terminals 1D-5 and 1H-2)

TORQUE SPECIFICATIONS

Part Tightened	N*m	kgf*cm	ft.*lbf
Throttle body assembly x Intake air surge tank	10	102	7
Knock sensor x Cylinder block sub-assembly	20	199	14
Water outlet x Cylinder head sub-assembly	15	153	11
ECM x Instrument panel reinforcement	5.5	56	49 in.*lbf
ECM x Blower assembly	5.5	56	49 in.*lbf
Accelerator pedal rod assembly x Body	5.4	55	48 in.*lbf

2GR-FE ENGINE MECHANICAL

SERVICE DATA

Ignition timing	Terminals TC and CG of DLC3 connected	10 +- 2° BTDC at idle (Transmission in neutral)
	Terminals TC and CG of DLC3 disconnected	5 to 15° BTDC at idle (Transmission in neutral)
Idle speed		650 +- 50 rpm (Transmission in neutral)
Compression	Compression pressure	1.4 MPa (14 kgf/cm^2, 199 psi) or more
	Minimum pressure	0.98 MPa (10 kgf/cm^2, 142 psi)
	Difference between each cylinder	0.1 MPa (1.0 kgf/cm^2, 15 psi) or less
Cylinder head set bolt		
Outside diameter	Standard	10.85 to 11.00 mm (0.4272 to 0.4331 in.)
	Minimum	10.70 mm (0.4213 in.)
Chain		
Elongation	Maximum	136.9 mm (5.390 in.)
No. 2 chain		
Elongation	Maximum	137.6 mm (5.417 in.)
Crankshaft timing gear		
Diameter (w/ chain)	Minimum	61.4 mm (2.417 in.)
Idle sprocket		
Diameter (w/ chain)	Minimum	61.4 mm (2.417 in.)
Idle gear shaft		
Idle gear shaft diameter		30.000 to 30.013 mm (1.1811 to 1.1816 in.)
Idle gear inside diameter		30.020 to 30.033 mm (1.1819 to 1.1824 in.)
Oil clearance	Standard	0.007 to 0.033 mm (0.0003 to 0.0013 in.)
	Maximum	0.083 mm (0.0033 in.)
Chain tensioner assembly No. 2		
Worn depth	Maximum	0.9 mm (0.035 in.)
Chain tensioner assembly No. 3		
Worn depth	Maximum	0.9 mm (0.035 in.)
Chain tensioner slipper		
Worn depth	Maximum	1.0 mm (0.039 in.)
Chain vibration damper No. 1		
Worn depth	Maximum	1.0 mm (0.039 in.)
Chain vibration damper No. 2		
Worn depth	Maximum	1.0 mm (0.039 in.)
Cylinder head sub-assembly		
	Cylinder head lower	0.05 mm (0.0020 in.)
	Intake	0.08 mm (0.0031 in.)
	Exhaust	0.08 mm (0.0031 in.)
Warpage	Maximum	0.10 mm (0.0039 in.)
Intake valve		
Valve stem diameter		5.470 to 5.485 mm (0.2154 to 0.2159 in.)
Margin thickness	Standard	1.0 mm (0.039 in.)
	Maximum	0.5 mm (0.0197 in.)
Overall length	Standard	105.85 mm (4.1673 in.)
	Maximum	105.35 mm (4.1476 in.)
Exhaust valve		
Valve stem diameter		5.465 to 5.480 mm (0.2152 to 0.2158 in.)

Margin thickness	Standard	1.0 mm (0.0394 in.)
	Maximum	0.5 mm (0.0197 in.)
Overall length	Standard	111.40 mm (4.3858 in.)
	Maximum	109.90 mm (4.3268 in.)
Inner compression spring		
Free length		45.46 mm (1.7898 in.)
Deviation	Maximum	1.0 mm (0.039 in.)
Angle (reference)	Maximum	2°
Intake valve guide bush		
Inside diameter		5.510 to 5.530 mm (0.2169 to 0.2177 in.)
Oil clearance	Standard	0.025 to 0.060 mm (0.0010 to 0.0024 in.)
	Maximum	0.08 mm (0.0031 in.)
Bush bore diameter	Use STD	10.285 to 10.306 mm (0.4049 to 0.4057 in.)
	Use O/S 0.05	10.335 to 10.356 mm (0.4069 to 0.4077 in.)
Protrusion height		9.3 to 9.7 mm (0.3661 to 0.3819 in.)
Exhaust valve guide bush		
Inside diameter		5.510 to 5.530 mm (0.2169 to 0.2177 in.)
Oil clearance	Standard	0.030 to 0.065 mm (0.0012 to 0.0026 in.)
	Maximum	0.10 mm (0.0039 in.)
Bush bore diameter	Use STD	10.285 to 10.306 mm (0.4049 to 0.4057 in.)
	Use O/S 0.05	10.335 to 10.356 mm (0.4069 to 0.4077 in.)
Protrusion height		9.30 to 9.70 mm (0.3661 to 0.3819 in.)
No. 1 camshaft		
Journal diameter	No. 1 journal	35.946 to 35.960 mm (1.4152 to 1.4157 in.)
	Other journals	25.959 to 25.975 mm (1.0220 to 1.0226 in.)
Circuit runout	Maximum	0.04 mm (0.0016 in.)
Cam lobe height	Standard	44.316 to 44.416 mm (1.7447 to 1.7487 in.)
	Maximum	44.166 mm (1.7388 in.)
Oil clearance	Standard No. 1 journal	0.040 to 0.079 mm (0.0016 to 0.0031 in.)
	Other journals	0.025 to 0.062 mm (0.0010 to 0.0024 in.)
	Maximum No. 1 journal	0.10 mm (0.0039 in.)
	Other journals	0.09 mm (0.0035 in.)
Thrust clearance	Standard	0.08 to 0.13 mm (0.0031 to 0.0051 in.)
	Maximum	0.15 mm
No. 2 camshaft		
Journal diameter	No. 1 journal	35.946 to 35.960 mm (1.4152 to 1.4157 in.)
	Other journals	25.959 to 25.975 mm (1.0220 to 1.0226 in.)
Circuit runout	Maximum	0.04 mm (0.0016 in.)
Cam lobe height	Standard	44.262 to 44.362 mm (1.7426 to 1.7465 in.)
	Maximum	44.112 mm (1.7367 in.)
Oil clearance	Standard No. 1 journal	0.040 to 0.079 mm (0.0016 to 0.0031 in.)
	Other journals	0.025 to 0.062 mm (0.0010 to 0.0024 in.)
	Maximum No. 1 journal	0.10 mm (0.0039 in.)
	Other journals	0.09 mm (0.0035 in.)
Thrust clearance	Standard	0.08 to 0.13 mm (0.0031 to 0.0051 in.)
	Maximum	0.15 mm
No. 3 camshaft		
Journal diameter	No. 1 journal	35.946 to 35.960 mm (1.4152 to 1.4157 in.)
	Other journals	25.959 to 25.975 mm (1.0220 to 1.0226 in.)
Circuit runout	Maximum	0.04 mm (0.0016 in.)

Cam lobe height	Standard	44.316 to 44.416 mm (1.7447 to 1.7487 in.)
	Maximum	44.166 mm (1.7388 in.)
Oil clearance	Standard No. 1 journal	0.040 to 0.079 mm (0.0016 to 0.0031 in.)
	Other journals	0.025 to 0.062 mm (0.0010 to 0.0024 in.)
	Maximum No. 1 journal	0.10 mm (0.0039 in.)
	Other journals	0.09 mm (0.0035 in.)
Thrust clearance	Standard	0.08 to 0.13 mm (0.0031 to 0.0051 in.)
	Maximum	0.15 mm
No. 4 camshaft		
Journal diameter	No. 1 journal	35.946 to 35.960 mm (1.4152 to 1.4157 in.)
	Other journals	25.959 to 25.975 mm (1.0220 to 1.0226 in.)
Circuit runout	Maximum	0.04 mm (0.0016 in.)
Cam lobe height	Standard	44.262 to 44.362 mm (1.7426 to 1.7465 in.)
	Maximum	44.112 mm (1.7367 in.)
Oil clearance	Standard No. 1 journal	0.040 to 0.079 mm (0.0016 to 0.0031 in.)
	Other journals	0.025 to 0.062 mm (0.0010 to 0.0024 in.)
	Maximum No. 1 journal	0.10 mm (0.0039 in.)
	Other journals	0.09 mm (0.0035 in.)
Thrust clearance	Standard	0.08 to 0.13 mm (0.0031 to 0.0051 in.)
	Maximum	0.15 mm
Ring pin for cylinder head sub-assembly		
Protrusion height		2.5 to 3.8 mm (0.098 to 0.150 in.)
Straight pin for cylinder head sub-assembly		
Protrusion height		17.5 to 19.5 mm (0.689 to 0.768 in.)
Connecting rod thrust clearance	Standard	0.15 to 0.40 mm (0.0059 to 0.0157 in.)
	Maximum	0.50 mm (0.020 in.)
Connecting rod oil clearance	Standard	0.045 to 0.067 mm (0.0018 to 0.0026 in.)
	Maximum	0.070 mm (0.0028 in.)
Crankshaft thrust clearance	Standard	0.04 to 0.24 mm (0.0016 to 0.0094 in.)
	Maximum	0.30 mm (0.0118 in.)
	Thrust washer thickness	2.43 to 2.48 mm (0.0957 to 0.0976 in.)
Cylinder block warpage	Maximum	0.07 mm (0.0028 in.)
Cylinder bore diameter	Standard	94.000 to 94.012 mm (3.7008 to 3.7013 in.)
	Maximum	94.200 mm (3.7087 in.)
Piston diameter		
	Distance	9.8 mm (0.3858 in.)
	Standard	93.960 to 93.980 mm (3.6992 to 3.7000 in.)
	Maximum	93.830 mm (3.6941 in.)
Oil clearance	Standard	0.02 to 0.052 mm (0.0008 to 0.0020 in.)
	Maximum	0.06 mm
Connecting rod out-of alignment	Maximum	0.05 mm (0.0020 in.) per 100 mm (3.94 in.)
Connecting rod twist	Maximum	0.15 mm (0.0059 in.) per 100 mm (3.94 in.)
Piston pin hole inside diameter		22.001 to 22.010 mm (0.8662 to 0.8665 in.)
Piston pin diameter		21.997 to 22.006 mm (0.8660 to 0.8664 in.)
Oil clearance	Standard	0.001 to 0.007 mm (0.00002 to 0.0003 in.)
	Maximum	0.015 mm (0.0006 in.)
Connecting rod bushing inside diameter		22.005 to 22.014 mm (0.8663 to 0.8667 in.)
Oil clearance	Standard	0.005 to 0.011 mm (0.0002 to 0.0004 in.)
	Maximum	0.03 mm (0.0012 in.)

SS

Piston ring groove clearance	No. 1	0.020 to 0.070 mm (0.0008 to 0.0028 in.)
	No. 2	0.020 to 0.060 mm (0.0008 to 0.0024 in.)
	Oil	0.070 to 0.150 mm (0.0028 to 0.0059 in.)
Piston ring end gap	Standard No. 1	0.25 to 0.35 mm (0.0098 to 0.0138 in.)
	No. 2	0.50 to 0.60 mm (0.0197 to 0.0236 in.)
	Oil (Side rail)	0.10 to 0.40 mm (0.0039 to 0.0157 in.)
	Maximum No. 1	0.50 mm (0.0197 in.)
	No. 2	0.85 mm (0.0335 in.)
	Oil (Side rail)	0.60 mm (0.0236 in.)
Connecting rod bolt diameter	Standard	7.2 to 7.3 mm (0.283 to 0.287 in.)
	Maximum	7.0 mm (0.276 in.)
Crankshaft bearing cap set bolt diameter	Standard	10.8 to 11.0 mm (0.4252 to 0.4331 in.)
	Maximum	10.7 mm (0.4213 in.)
Crankshaft circle runout	Maximum	0.06 mm (0.0024 in.)
Main journal diameter		60.988 to 61.000 mm (2.4011 to 2.4016 in.)
Main journal taper and out-of-round	Maximum	0.02 mm (0.0008 in.)
Crank pin diameter		52.992 to 53.000 mm (2.0863 to 2.0866 in.)
Crank pin taper and out-of-round	Maximum	0.02 mm (0.0008 in.)
Crankshaft oil clearance	Standard	0.026 to 0.047 mm (0.0010 to 0.0019 in.)
	Maximum	0.050 mm (0.0020 in.)
Straight pin for cylinder block sub-assembly		
Protrusion height	Pin A	23 mm (0.906 in.)
	Pin B	6 mm (0.236 in.)
	Pin C	11 mm (0.433 in.)
	Pin D	9 mm (0.354 in.)
Tight plug for cylinder block	Depth	0.2 to 1.2 mm (0.007 to 0.047 in.)

TORQUE SPECIFICATIONS

Part Tightened		N*m	kgf*cm	ft.*lbf
Ignition coil assembly x Cylinder head cover sub-assembly		10	102	7
Engine hanger No. 1 x Cylinder head sub-assembly RH		33	337	24
Engine hanger No. 2 x Cylinder head sub-assembly LH		33	337	24
Engine mounting bracket RH x Cylinder block sub-assembly		54	551	40
Chain vibration damper No. 1 x Cylinder block sub-assembly		23	229	17
Oil level gauge guide x Cylinder head sub-assembly		21	214	15
Idler pulley sub-assembly No. 2 x Timing chain cover sub-assembly		43	438	32
V-ribbed belt tensioner assembly x Cylinder block sub-assembly		43	438	32
Intake manifold x Cylinder head sub-assembly		21	214	15
Exhaust manifold sub-assembly RH x Cylinder head sub-assembly RH		21	214	15
Exhaust manifold sub-assembly LH x Cylinder head sub-assembly LH		21	214	15
Drive plate & ring gear sub-assembly x Crankshaft		83	850	61
Air cleaner case x Body		5.0	51	44 in.*lbf
E.F.I engine coolant temperature x water by-pass joint RR		20	200	14
Engine assembly w/ Transaxle x Body	Bolt A	85	867	63
	Bolt B	32	329	24
Manifold stay No. 2 x Exhaust manifold sub-assembly LH		34	347	25
Air cleaner inlet No. 1 x Body		5.0	51	44 in.*lbf
Air cleaner inlet No. 2 x Body		5.0	51	44 in.*lbf
Battery clamp x Body		9.0	92	80 in.*lbf
Steering intermediate shaft x Steering gear		35	360	26
Stabilizer link x Shock absorber		74	755	55
Tie rod assembly x Steering gear		49	500	36
Speed sensor front x Front axle		8.0	82	71 in.*lbf
Front axle hub nut x Front drive shaft		294	2,998	217
Cooler compressor x V-ribbed belt tensioner		25	250	18
Engine mounting control bracket x Engine mounting bracket front No. 1 LH				
	Bolt A	44	450	32
	Bolt B	38	387	28
	Nut	23	235	17
Engine assembly w/ Transaxle x Front frame assembly	Bolt	87	887	64
	Nut	95	969	70
Drive shaft bearing bracket x Cylinder block sub-assembly		64	650	47
Exhaust manifold heat insulator No. 2 x Exhaust manifold sub-assembly LH		8.5	87	75 in.*lbf
Oil pressure switch x Oil pan sub-assembly		21	210	15
Engine mounting stay No. 2 RH x Intake manifold		21	214	15
Timing gear cover No. 2 x Chain cover sub-assembly		6.0	61	53 in.*lbf
Engine mounting bracket front No. 1 LH x Chain cover		54	551	40
Camshaft bearing cap x Camshaft housing	1st	10	102	7
	2nd	16	163	12
Camshaft housing x Cylinder head sub-assembly		25	255	18
Chain tensioner No. 1 x Cylinder head sub-assembly		10	102	7
Chain tensioner No. 2 x Cylinder head sub-assembly		21	214	15
Chain tensioner No. 3 x Cylinder head sub-assembly		21	214	15
Camshaft timing gear assembly x Camshaft		100	1,020	74
Camshaft timing exhaust gear assembly x Camshaft		100	1,020	74

Part Tightened		N*m	kgf*cm	ft.*lbf
Engine rear oil seal retainer x Cylinder block sub-assembly		10	102	7
Knock sensor x Cylinder block sub-assembly		20	204	15
Water inlet pipe x Cylinder block sub-assembly		10	102	7
Cylinder head RH x Cylinder block sub-assembly	1st	36	367	27
	2nd	Turn 90°	Turn 90°	Turn 90°
	3nd	Turn 90°	Turn 90°	Turn 90°
Cylinder head sub-assembly LH x Cylinder block sub-assembly				
	Recessed head 1st	36	367	27
	2nd	Turn 90°	Turn 90°	Turn 90°
	3nd	Turn 90°	Turn 90°	Turn 90°
	14 mm (0.55 in.) head	30	306	22
Chain vibration damper No. 1 x Cylinder block sub-assembly		23	230	17
Idle gear No. 1 x Cylinder block sub-assembly		60	612	44
Timing chain cover plate x Timing chain cover sub-assembly		9.1	93	81 in.*lbf
Timing chain cover sub-assembly x Cylinder head and block				
	Areas 1: Bolt	21	214	15
	Areas 2: Bolt	21	214	15
	Areas 3: Bolt and Nut	21	214	15
	Areas 4: Bolt A	43	438	32
	Areas 4: Except Bolt A	21	214	15
Water pump assembly x Timing chain cover sub-assembly		9.1	93	81 in.*lbf
Oil pan baffle plate x Cylinder block sub-assembly		10	102	7
Oil pan sub-assembly x Cylinder block and timing chain cover sub-assembly		10	102	7
Oil pan stud bolt x Oil pan sub-assembly		4.0	41	35 in.*lbf
Oil strainer stud bolt x Timing chain cover sub-assembly		4.0	41	35 in.*lbf
Oil strainer sub-assembly x Cylinder block and timing chain cover sub-assembly		10	102	7
Oil pan sub-assembly x Cylinder block and timing chain cover sub-assembly				
	bolt A	10	102	7
	except bolt A	21	214	15
Oil pan sub-assembly No. 2 x Oil pan sub-assembly		10	102	7
Oil pan drain plug x Oil pan sub-assembly No. 2		40	408	30
Crankshaft pulley x Crankshaft		250	2,550	184
Cylinder head cover sub-assembly x Cylinder head sub-assembly RH				
	bolt A	21	214	15
	except bolt A	10	102	7
Cylinder head cover sub-assembly LH x Cylinder head sub-assembly LH				
	bolt A	21	214	15
	except bolt A	10	102	7
Water outlet x Cylinder head sub-assembly	bolt	10	102	7
	nut	10	104	8
Water inlet housing set nut		10	102	7
Water inlet set bolt and nut		10	102	7
Oil filter cap x Oil pan		25	255	18
Camshaft position sensor		10	102	7
Ventilation valve x Cylinder head cover sub-assembly LH		27	275	20
Oil pipe union x Cylinder block sub-assembly		57	581	42

Part Tightened		N*m	kgf*cm	ft.*lbf
Oil pipe union x Cylinder head cover sub-assembly		57	581	42
Oil pipe x Cylinder head sub-assembly		10	102	7
Crankshaft position sensor x Cylinder block sub-assembly		10	102	7
Camshaft timing oil control valve assembly x Cylinder head cover		10	102	7
Cylinder block water drain cock sub-assembly x Cylinder block sub-assembly		25	255	18
Water drain cock plug x Water drain cock sub-assembly		13	130	9
Spark plug x Cylinder head sub-assembly		18	184	13
Stud bolt x Cylinder head sub-assembly	For A and B bolts	10	102	7
	For C bolts	4.0	41	35 in.*lbf
W/ head screw plug x Cylinder head sub-assembly		44	449	32
W/ head screw plug No. 2 x Cylinder head sub-assembly		80	816	59
Main bearing cap x Cylinder block sub-assembly	16 pointed head 1st	61	622	45
	2nd	Turn 90°	Turn 90°	Turn 90°
	14 mm head	52	525	38
Connecting rod cap x Connecting rod	1st	25	255	18
	2nd	Turn 90°	Turn 90°	Turn 90°
Stud bolt x Cylinder block sub-assembly		10	102	7
Sub-assembly oil nozzle No. 1 x Cylinder block sub-assembly		9.0	92	80 in.*lbf

2GR-FE FUEL

SERVICE DATA

Fuel pressure		304 to 343 kPa (3.1 to 3.5 kgf/cm^2, 44.1 to 49.7 psi)
Fuel pressure		147 kPa (1.5 kgf/cm^2, 21 psi) or more
Fuel injector		
Resistance	at 20°C (68°F)	11.6 to 12.4 Ω
Injection volume		84 to 100 cm^2 (5.1 to 6.0 cu in.) per 15 seconds
Difference between each cylinder		16 cm^3 (0.96 cu in.) or less
Fuel leakage		1 drop or less per 16 minutes
Fuel pump		
Resistance	at 20°C (68°F)	0.2 to 3.0 Ω

TORQUE SPECIFICATIONS

Part Tightened		N*m	kgf*cm	ft.*lbf
Fuel delivery pipe sub-assembly x Intake manifold		21	214	15
Intake air surge tank x Intake manifold	Bolt	18	184	13
	Nut	16	163	12
Intake air surge tank x Cylinder head		21	214	15
Vacuum hose clamp set bolt		5.4	55	48 in.*lbf
Air cleaner hose clamp x Throttle w/ motor body assembly		5.0	51	44 in.*lbf
Fuel tank bent tube set plate x Fuel tank assembly		5.9	60	52 in.*lbf
Fuel main tube support x Fuel tank assembly		5.4	55	48 in.*lbf
Fuel tank band sub-assembly No. 1 RH x Body		39	400	29
Fuel tank band sub-assembly No. 1 LH x Body		39	400	29
Fuel tank protector lower center x Fuel tank assembly		5.4	55	48 in.*lbf
Parking brake cable assembly No. 2 x Body	Bolt	6.0	61	53 in.*lbf
	Nut	8.5	87	75 in.*lbf
Parking brake cable assembly No. 3 x Body	Bolt	6.0	61	53 in.*lbf
	Nut	8.5	87	75 in.*lbf

2GR-FE EMISSION CONTROL

SERVICE DATA

Vacuum switching valve No. 1		
Resistance	at 20°C (68°F)	26 to 30 Ω
	at 100°C (212°F)	32 to 40 Ω
VSV for EVAP		
Resistance	1 - 2	26 to 30 Ω at 20°C (68°F)
	1 - Body ground	10 kΩ or higher
	2 - Body ground	10 kΩ or higher
Air fuel ratio sensor		
Resistance	1 (HT) - 2 (+B)	0.8 to 1.4 Ω at 20°C (68°F)
Oxygen sensor		
Resistance	1 (HT) - 2 (+B)	11 to 16 Ω at 20°C (68°F)

TORQUE SPECIFICATIONS

Part Tightened		N*m	kgf*cm	ft.*lbf
Charcoal canister assembly x Body		36	367	27
Air fuel ratio sensor x Front pipe assembly		44	449	32
	with SST	40	408	30
Oxygen sensor x Front pipe assembly		44	449	32
	with SST	40	408	30

2GR-FE INTAKE

SERVICE DATA

Vacuum switching valve assembly		
Resistance	1 - 2	37 to 44 Ω at 20°C (68°F)
	1 - Body ground	10 kΩ or higher
	2 - Body ground	10 kΩ or higher

2GR-FE EXHAUST

TORQUE SPECIFICATIONS

2GR-FE

Part Tightened	N*m	kgf*cm	ft.*lbf
Exhaust pipe assembly center x Exhaust pipe assembly tail	43	438	32
Exhaust pipe assembly front x Exhaust manifold RH	62	632	46
Exhaust pipe assembly front x Exhaust manifold LH	62	632	46
Exhaust pipe assembly front x Exhaust pipe assembly center	56	571	41
Exhaust pipe damper x Exhaust pipe assembly center	19	194	14
Exhaust pipe No. 1 support bracket x Body	33	337	24
Front exhaust pipe No. 1 support bracket x Body	33	337	24
Rear exhaust pipe No. 1 support bracket x Body	33	337	24
Exhaust pipe support No. 4 x Body	33	337	24
Exhaust pipe No. 4 support bracket sub-assembly x Body	39	398	29
Exhaust pipe No. 4 support bracket sub-assembly x Body	39	398	29
Heated oxygen sensor (Bank 1 Sensor 2) x Exhaust pipe assembly front	44	449	32
Heated oxygen sensor (Bank 2 Sensor 2) x Exhaust pipe assembly front	44	449	32

2GR-FE COOLING

SERVICE DATA

2GR-FE

Thermostat		
Valve opening temperature		80 to 84 °C (176 to 183 °F)
Valve lift	at 95 °C (203 °F)	10 mm (0.394 in.) or more
Radiator cap sub-assembly		
Specified opening pressure		69.0 to 112.8 kPa (0.70 to 1.15 kgf/cm2, 10.0 to 16.4 psi)
Cooling fan		
Standard amperage	at 20 °C (68 °F)	8.0 to 12.0 A

TORQUE SPECIFICATIONS

2GR-FE

Part Tightened		N*m	kgf*cm	ft.*lbf
Cylinder block drain cock plug x Drain cock		13	130	10
Water pump assembly x Cylinder block	A bolt B, C bolt	21 9.1	214 93	15 81 in.*lbf
Water pump pulley x Cylinder block		10	102	7
Idler pulley sub-assembly No.2 x Cylinder block		43	438	32
Water inlet housing x Cylinder block		10	102	7
Water inlet x Water inlet housing		10	102	7
Radiator support upper x Body		7.0	71	62 in.*lbf
hood lock assembly x Body		8.0	82	71 in.*lbf
Air cleaner inlet No.1 x Body		5.0	51	44 in.*lbf
Air cleaner inlet No.2 x Body		5.0	51	44 in.*lbf
Oil cooler assembly x Radiator tank lower		8.3	85	74 in.*lbf
Oil cooler pipe x Oil cooler assembly		15	150	11
Condenser assembly x Radiator assembly		5.4	55	48 in.*lbf

2GR-FE COOLING

SERVICE DATA

2GR-FE

Thermostat		
Valve opening temperature		80 to 84 °C (176 to 183 °F)
Valve lift	at 95 °C (203 °F)	10 mm (0.394 in.) or more
Radiator cap sub-assembly		
Specified opening pressure		69.0 to 112.8 kPa (0.70 to 1.15 kgf/cm2, 10.0 to 16.4 psi)
Cooling fan		
Standard amperage	at 20 °C (68 °F)	8.0 to 12.0 A

TORQUE SPECIFICATIONS

2GR-FE

Part Tightened		N*m	kgf*cm	ft.*lbf
Cylinder block drain cock plug x Drain cock		13	130	10
Water pump assembly x Cylinder block	A bolt B, C bolt	21 9.1	214 93	15 81 in.*lbf
Water pump pulley x Cylinder block		10	102	7
Idler pulley sub-assembly No.2 x Cylinder block		43	438	32
Water inlet housing x Cylinder block		10	102	7
Water inlet x Water inlet housing		10	102	7
Radiator support upper x Body		7.0	71	62 in.*lbf
hood lock assembly x Body		8.0	82	71 in.*lbf
Air cleaner inlet No.1 x Body		5.0	51	44 in.*lbf
Air cleaner inlet No.2 x Body		5.0	51	44 in.*lbf
Oil cooler assembly x Radiator tank lower		8.3	85	74 in.*lbf
Oil cooler pipe x Oil cooler assembly		15	150	11
Condenser assembly x Radiator assembly		5.4	55	48 in.*lbf

2GR-FE LUBRICATION

SERVICE DATA

Oil pressure		
	at idle speed	80 kPa (0.8 kgf/cm^2, 11.6 psi) or more
	at 6,000 rpm	380 kPa (3.9 kgf/cm^2, 55.5 psi) or more
Oil pump		
Tip clearance	Standard	0.060 to 0.160 mm (0.0024 to 0.0063 in.)
	Maximum	0.16 mm (0.0063 in.)
Side clearance	Standard	0.030 to 0.090 mm (0.0012 to 0.0035 in.)
	Maximum	0.09 mm (0.0035 in.)
Body clearance	Standard	0.250 to 0.325 mm (0.0098 to 0.0128 in.)
	Maximum	0.325 mm (0.0128 in.)

TORQUE SPECIFICATIONS

Part Tightened		N*m	kgf*cm	ft.*lbf
Oil pressure switch x Oil pan sub-assembly		15	153	11
Timing chain cover sub-assembly x Cylinder head and block				
	Areas 1: Bolt	21	214	15
	Area 2: Bolt	21	214	15
	Area 3: Bolt and Nut	21	214	15
	Area 4: Bolt A	43	438	32
	Area 4: Except Bolt A	21	214	15
Oil filter cap x Oil pan sub-assembly		25	255	18
Oil filter drain plug x Oil filter cap		13	127	10
Oil pump cover x Timing chain cover sub-assembly		9.1	93	81 in.*lbf
Oil pump relief valve x Timing chain cover sub-assembly		49	500	36

2GR-FE IGNITION

SERVICE DATA

Spark plug		
Require spark plug	DENSO made	FK20HR11
Electrode gap	Correct electrode gap for new spark plug	1.0 to 1.1 mm (0.039 to 0.043 in.)
	Maximum electrode gap for used spark plug	1.4 mm (0.055 in.)
VVT sensor (Intake camshaft Bank1)		
Output voltage	VV1+ - VV1-	3.375 to 4.950 V (Hi)
	VV1+ - VV1-	0.450 to 1.375 V (Lo)
VVT sensor (Intake camshaft Bank2)		
Output voltage	VV2+ - VV2-	3.375 to 4.950 V (Hi)
	VV2+ - VV2-	0.450 to 1.375 V (Lo)
Output voltage VVT sensor (Exhaust camshaft Bank1)		
Output voltage	EV1+ - EV1-	3.375 to 4.950 V (Hi)
	EV1+ - EV1-	0.450 to 1.375 V (Lo)
Output voltage VVT sensor (Exhaust camshaft Bank2)		
Output voltage	EV2+ - EV2-	3.375 to 4.950 V (Hi)
	EV2+ - EV2-	0.450 to 1.375 V (Lo)
Output voltage Crankshaft position sensor		
Resistance	Cold	1,630 to 2,740 Ω
	Hot	2,065 to 3,225 Ω

TORQUE SPECIFICATIONS

Part Tightened	N*m	kgf*cm	ft.*lbf
VVT sensor x Cylinder head cover	10	102	7
Crankshaft position sensor x Cylinder block	10	102	7
Spark plug x Cylinder head	18	184	13
Ignition coil x Cylinder head cover	7.5	76	66 in.*lbf

2GR-FE STARTING

SERVICE DATA

Starter assembly		
Specified current		90 A or less at 11.5 V
Starter relay		
Specified condition	3 - 5	10 kΩ or higher
	3 - 5	Below 1 Ω (when battery voltage is applied to terminals 1 and 2)
Engine switch		
Specified condition	7 - 5	10 kΩ or higher (Engine switch OFF)
	2 - 5	10 kΩ or higher (Engine switch OFF)
	7 - 5	Below 1 Ω (Engine switch ON)
	2 - 5	Below 1 Ω (Engine switch ON)
Ignition or starter switch assembly		
Specified condition		10 kΩ or higher (Switch condition LOCK)
	1 - 3	Below 1 Ω (Switch condition ACC)
	1 - 2	Below 1 Ω (Switch condition ON)
	1 - 3	Below 1 Ω (Switch condition ON)
	5 - 6	Below 1 Ω (Switch condition ON)
	1 - 2	Below 1 Ω (Switch condition START)
	4 - 5	Below 1 Ω (Switch condition START)
	5 - 6	Below 1 Ω (Switch condition START)
Starter assembly		
Starter armature assembly		
Commutator depth	Standard	3.1 mm (0.122 in.)
	Maximum	3.8 mm (0.150 in.)
Resistance (between the segments)	Standard	below 1 Ω
Resistance (between the commutator and armature coil core)	Standard	10 kΩ or higher
Starter commutator end frame assembly		
Brush length	Standard	9.0 mm (0.354 in.)
	Maximum	4.0 mm (0.158 in.)
Resistance	Standard	10 kΩ or higher
Repair starter armature assembly		
Snap ring length	Maximum	5.0 mm (0.197 in.)
Service starter kit		
Resistance (between terminals 50 and C)	Standard	below 1 Ω
Resistance (between terminals 50 and swich body)	Standard	below 2 Ω

TORQUE SPECIFICATIONS

Part Tightened	N*m	kgf*cm	ft.*lbf
Starter assembly x Transaxle housing	37	380	26
Starter wire x Starter assembly	9.8	100	87 in.*lbf
Starter commutator end frame assembly x Motor terminal starter kit	5.9	60	52 in.*lbf
Starter drive housing assembly x Repair service starter kit	7.5	76	66 in.*lbf
Lead wire x Repair service starter kit	9.8	100	87 in.*lbf

2GR-FE CHARGING

SERVICE DATA

Voltage regulator	Regulating voltage	13.2 to 14.8 V
	Standard amperage	10 A or less
Generator assembly		
Generator brush holder assembly		
Brush length	Standard	10.5 mm (0.413 in.)
	Minimum	4.5 mm (0.177 in.)
Generator rotor assembly		
Resistance (between the slip ring)	at 20 °C (68 °F)	2.3 to 2.7 Ω
Resistance (between the slip ring and rotor)	Standard	1 MΩ or higher
Slip ring diameter	Standard	14.2 to 14.4 mm (0.559 to 0.567 in.)
	Minimum	14.0 mm (0.551 in.)

TORQUE SPECIFICATIONS

Part Tightened		N*m	kgf*cm	ft.*lbf
Generator assembly x Generator Bracket		20	204	15
Generator assembly x Wire harness clamp stay		8.4	86	74 in.*lbf
Generator assembly x Cylinder head assembly		43	438	32
Generator assembly x Cylinder block assembly		43	438	32
Generator Bracket x Cylinder block assembly		20	204	15
Generator wire x Generator assembly		9.8	100	87 in.*lbf
Retainer plate x Drive end frame assembly generator		2.3	23	20 in.*lbf
Generator rectifier end frame x Drive end frame assembly generator		5.8	59	51 in.*lbf
Generator brush holder assembly x Generator rectifier end frame		1.8	18	16 in.*lbf
Generator rear end cover x Generator rectifier end frame		4.6	47	41 in.*lbf
Generator pulley x Generator rotor assembly (100A Generator)		111	1,127	82
Generator brush holder assembly x Generator rectifier end frame		1.8	18	16 in.*lbf
Generator rear end cover x Generator regulator end frame		4.6	47	41 in.*lbf
Generator drive end frame x Generator coil assembly		5.8	59	51 in.*lbf
Generator pulley w/ clutch x Generator rotor assembly		110	1,125	81
	For use with SST	87	891	64
Generator drive end frame x Bearing retainer		2.3	23	20 in.*lbf

U151E AUTOMATIC TRANSAXLE

SERVICE DATA

U151E (2GR-FE)		
Line pressure (Wheel locked)		
	Engine idling	
	D position	372 to 412 kPa (3.8 to 4.2 kgf/cm^2, 54 to 60 psi)
	R position	672 to 742 kPa (6.9 to 7.6 kgf/cm^2, 97 to 108 psi)
	AT stall (Throttle valve fully opened)	
	D position	931 to 1,031kPa (9.5 to 10.5 kgf/cm^2, 135 to 150 psi)
	R position	1,768 to 1,968 kPa (18.0 to 20.0 kgf/cm^2, 256 to 285 psi)
Engine stall revolution	D and R position	2,250 +- 150 rpm
Time lag	N → D position	Less than 1.2 seconds
	N → R position	Less than 1.5 seconds
Engine idle speed (A/C OFF)	N position	650 +- 50 rpm
Drive plate runout	Max.	0.20 mm (0.0079 in.)
Torque converter runout	Max.	0.30 mm (0.0118 in.)
Differential oil seal drive in depth	LH side	0 +- 0.5 mm (0 +- 0.020 in.)
	RH side	0 +- 0.5 mm (0 +- 0.020 in.)
Shift schedule (Shift lever with Multi-mode automatic transmission)		
D position		
(Throttle valve fully opened)	1 → 2	46 to 53 km/h (29 to 33 mph)
	2 → 3	91 to 99 km/h (57 to 62 mph)
	3 → 4	147 to 161 km/h (91 to 100 mph)
	4 → 5	220 to 235 km/h (137 to 146 mph)
	5 → 4	211 to 227 km/h (131 to 141 mph)
	4 → 3	142 to 155 km/h (88 to 96 mph)
	3 → 2	86 to 94 km/h (53 to 58 mph)
	2 → 1	32 to 38 km/h (20 to 24 mph)
(Throttle valve fully closed)	4 → 5	67 to 74 km/h (42 to 46 mph)
	5 → 4	37 to 43 km/h (23 to 27 mph)
Manual down shift speed		
D position		
3rd gear	→ 3	147 to 161 km/h (91 to 100 mph)
2rd gear	→ 2	91 to 99 km/h (57 to 62 mph)
1st gear	→ 1	39 to 45 km/h (24 to 28 mph)
Lock-up point	Throttle valve opening 5 %	
D position		
5th gear	Lock-up ON	67 to 74 km/h (42 to 46 mph)
	Lock-up OFF	64 to 71 km/h (40 to 44 mph)
4th gear	Lock-up ON	98 to 106 km/h (61 to 66 mph)
	Lock-up OFF	95 to 103 km/h (59 to 64 mph)
Frex lock-up point	Throttle valve opening 5 %	
D position		
5th gear	Frex lock-up ON	56 to 63 km/h (35 to 40 mph)
	Frex lock-up OFF	55 to 62 km/h (34 to 39 mph)

U151E (2GR-FE)		
4th gear	Frex lock-up ON	41 to 48 km/h (25 to 30 mph)
	Frex lock-up OFF	40 to 46 km/h (25 to 29 mph)

TORQUE SPECIFICATIONS

Part Tightened		N*m	kgf*cm	ft.*lbf
Park/neutral position switch	Bolt	5.4	55	48 in.*lbf
	Nut	6.9	70	61 in.*lbf
Control shaft lever x Control shaft		13	130	9
Shift control cable x Control shaft lever		15	153	11
Transaxle housing x Engine block	A bolt	64	650	47
	B bolt	46	470	34
	C bolt	43	438	32
Torque converter clutch x Drive plate		41	418	30
Flyweel housing under cover x Transaxle		7.8	80	69 in.*lbf
Engine mounting bracket x Transaxle		64	653	47
Oil filler tube x Transaxle		5.5	56	49 in.*lbf
Control cable bracket No. 1 x Transaxle		12	122	9
Control cable bracket No. 2 x Transaxle		12	122	9
Oil cooler tube clamp x Control cable bracket		5.5	56	49 in.*lbf
Oil cooler inlet tube x Transaxle		34	347	25
Oil cooler outlet tube x Transaxle		34	347	25
Starter x Transaxle		37	377	27
Starter wire x Starter assembly		9.8	100	87 in.*lbf
Wire harness x Transaxle		13	139	9
Wire harness clamp x Transaxle		8.4	86	74 in.*lbf
Speed sensor (NC) x Transaxle		11	115	8
Speed sensor (NT) x Transaxle		11	115	8
Drain plug x Oil pan		49	500	36
Transmission wire x Transaxle		5.4	55	48 in.*lbf
ATF temperature sensor x Valve body		6.6	67	58 in.*lbf
Oil pan x Transaxle		7.8	80	69 in.*lbf
Solenoid valve x Valve body	A, B bolt	11	110	8
	C, D bolt	6.6	67	58 in.*lbf
Valve body x Transaxle		11	110	8
Oil strainer x Valve body		11	110	8
Floor shift assembly x Body		12	122	9
Control cable x Body		5.0	50	43 in.*lbf

DRIVE SHAFT

SERVICE DATA

Front axle hub bearing	Looseness	Maximum: 0.05 mm (0.0020 in.)
Front axle hub	Runout	Maximum: 0.05 mm (0.0020 in.)
Rear axle hub bearing	Looseness	Maximum: 0.05 mm (0.0020 in.)
Rear axle hub	Runout	Maximum: 0.07 mm (0.0027 in.)

TORQUE SPECIFICATIONS

Part Tightened	N*m	kgf*cm	ft.*lbf
Front wheel set nut	103	1,050	76
Lower ball joint x Lower suspension arm	75	765	55
Tie rod end x Steering knuckle	49	500	36
Axle hub x Front drive shaft	294	3,000	217
Front drive shaft center bearing set bolt	32	330	24
Front speed sensor set bolt	8.0	82	71 in.*lbf
Front flexible hose and speed sensor wire harness x Shock absorber	19	192	14
Stabilizer link assembly x Shock absorber	74	755	55
Steering knuckle x Front disc brake caliper	107	1,090	79
Automatic transaxle Drain plug x Oil pan (U151E)	49	500	36
Automatic transaxle Drain plug x Oil pan (U241E)	49	500	36

AXLE

SERVICE DATA

Front axle hub bearing	Looseness	Maximum: 0.05 mm (0.0020 in.)
Front axle hub	Runout	Maximum: 0.05 mm (0.0020 in.)
Rear axle hub bearing	Looseness	Maximum: 0.05 mm (0.0020 in.)
Rear axle hub	Runout	Maximum: 0.07 mm (0.0027 in.)

TORQUE SPECIFICATIONS

Part Tightened	N*m	kgf*cm	ft.*lbf
Front wheel set nut	103	1,050	76
Lower ball joint x Lower suspension arm	75	765	55
Tie rod end x Steering knuckle	49	500	36
Axle hub x Front drive shaft	294	3,000	217
Front drive shaft center bearing set bolt	32	330	24
Front speed sensor set bolt	8.0	82	71 in.*lbf
Front flexible hose and speed sensor wire harness x Shock absorber	19	192	14
Stabilizer link assembly x Shock absorber	74	755	55
Steering knuckle x Front disc brake caliper	107	1,090	79
Rear wheel set nut	103	1,050	76
Rear flexible hose x Shock absorber	19	192	14
Shock absorber x Rear axle carrier	255	2,600	188
Rear axle hub set bolt	80	816	59
Rear axle carrier x Rear disc brake caliper	62	632	46

SUSPENSION

SERVICE DATA

Front wheel alignment	Vehicle height		
	XL	Front: A - B:	122 mm (4.80 in.)
		Rear: D - C:	45 mm (1.77 in.)
	TOURING	Front: A - B:	127 mm (5.00 in.)
		Rear: D - C:	50 mm (1.97 in.)
	XLS	Front: A - B:	126 mm (4.96 in.)
		Rear: D - C:	49 mm (1.93 in.)
	LIMITED	Front: A - B:	126 mm (4.96 in.)
		Rear: D - C:	52 mm (2.05 in.)
	Toe-in (total)		0° +- 6' (0 +- 0.1° , 0 +- 1 mm, 0 +- 0.04 in.)
	Wheel angle		
	XL	Inside wheel:	38°37' +- 2° (38.62° +- 2°)
		Outside wheel: Reference:	33°47' (33.78°)
	TOURING	Inside wheel:	38°27' +- 2° (38.45°+- 2°)
		Outside wheel: Reference:	33°41' (33.68°)
	XLS	Inside wheel:	38°29' +- 2° (38.48° +- 2°)
		Outside wheel: Reference:	33°43' (33.72°)
	LIMITED	Inside wheel:	38°27' +- 2° (38.45° +- 2°)
		Outside wheel: Reference:	33°40' (33.67°)
	Camber	XL:	-0°40' +- 45' (-0.67° +- 0.75°)
		TOURING:	-0°43' +- 45' (-0.72° +- 0.75°)
		XLS:	-0°43' +- 45' (-0.72° +- 0.75°)
		LIMITED:	-0°43' +- 45' (-0.72° +- 0.75°)
		Right-left error:	45' (0.75°) or less
	Caster	XL:	2°39' +- 45' (2.65° +- 0.75°)
		TOURING:	2°43' +- 45' (2.72° +- 0.75°)
		XLS:	2°42' +- 45' (2.70° +- 0.75°)
		LIMITED:	2°48' +- 45' (2.80° +- 0.75°)
		Right-left error	45' (0.75°) or less
	Steering axis inclination	XL:	12°15' +- 45' (12.25° +- 0.75°)
		TOURING:	12°22' +- 45' (12.37° +- 0.75°)
		XLS:	12°20' +- 45' (12.33° +- 0.75°)
		LIMITED:	12°20' +- 45' (12.33° +- 0.75°)
		Right-left error	45' (0.75°) or less
Front suspension	Lower ball joint turning torque		0.98 to 3.43 N*m (10 to 35 kgf*cm, 8.7 to 30 in.*lbf)
	Stabilizer bar link ball joint turning torque		0.05 to 1.96 N*m (0.5 to 20 kgf*cm, 0.4 to 17.4 in.*lbf)

A:
Ground clearance of front wheel center
B:
Ground clearance of lower suspension arm No. 2 set bolt head center
C:
Ground clearance of strut rod set bolt center
D:
Ground clearance of rear wheel center

Rear wheel alignment	Toe-in (total)		0°24' 12' (0.40° +- 0.20°), 4 +- 2 mm (0.16 +- 0.08 in.)
	No. 2 lower suspension arm length difference		1.5 mm (0.06 in.) or less
	Camber	XL:	-1°09' +- 45' (-1.15°+- 0.75°)
		TOURING:	-1°13' +- 45' (-1.22° +- 0.75°)
		XLS:	-1°13' +- 45' (-1.22° +- 0.75°)
		LIMITED:	-1°15' +- 45' (-1.25° +- 0.75°)
		Right-left error:	45' (0.75°) or less
Rear suspension	Stabilizer link ball joint turning torque		1.0 N*m (10 kgf*cm, 9 in.*lbf) or less

TORQUE SPECIFICATIONS

Part Tightened	N*m	kgf*cm	ft.*lbf
Tie rod end lock nut	74	755	55
Steering knuckle x Shock absorber	210	2,140	155
Hub nut	103	1,050	76
Suspension support x Body	85	867	63
Suspension support x Piston rod	49	500	36
Speed sensor wire harness bracket set bolt	19	192	14
Lower suspension arm set bolt (Front side)	200	2,040	148
Lower suspension arm set bolt (Rear side)	206	2,100	152
Transverse engine engine mounting insulator set nut	87	887	64
Stabilizer bar bracket x Suspension member	19	194	14
Stabilizer bar link set nut	74	755	55
Lower Ball Joint Assembly Front x Suspension Arm Lower	75	765	55
Shock absorber with coil spring x Body	39	400	29
Shock absorber with coil spring x Rear axle carrier	255	2,600	188
Flexible hose x Shock absorber with coil spring	19	195	14
Skid control sensor wire x Shock absorber with coil spring	5.5	56	49 in.*lbf
Shock absorber piston rod set nut	49	500	36
Shock absorber with coil spring x Stabilizer link	39	400	29
Rear suspension member x Rear suspension arm assembly No. 1	100	1,020	74
Rear suspension member x Rear suspension arm assembly No. 2	100	1,020	74
Rear suspension member x Body (A, B)	55	561	41
Rear suspension member x Body (C)	38	387	28
Rear suspension arm assembly No. 1 x Rear axle carrier	100	1,020	74
Rear suspension arm assembly No. 2 x Rear axle carrier	100	1,020	74
Stabilizer bar bracket set bolt	19	195	14
Stabilizer bar x Stabilizer link	39	400	29
Strut rod x Body	113	1,150	83
Strut rod x Rear axle carrier	113	1,150	83
Parking brake cable x Body	6.0	61	53 in.*lbf
Hub nut	103	1,050	76
Rear suspension arm assembly No. 2 x Lock nut	56	570	41
Rear suspension arm assembly No. 2 x Height control sensor sub-assembly	5.4	55	48 in.*lbf

TIRE AND WHEEL

SERVICE DATA

Cold tire inflation pressure	Tire size: 215/60R16 93V	Front, Rear	200 kPa (2.0 kgf/cm^2, 29 psi)
	Tire size: 215/55R17 93V	Front, Rear	220 kPa (2.2 kgf/cm^2, 32 psi)

Tire runout	1.4 mm (0.055 in.) or less
Imbalance after adjustment	8.0 g (0.018 lb) or less

BRAKE CONTROL

TORQUE SPECIFICATIONS

Part Tightened	N*m	kgf*cm	ft.*lbf
Brake line union nut	15	155	11
Wheel nut	103	1,050	76
Brake actuator assembly x Actuator bracket (without vsc)	8.0	82	71 in.*lbf
Brake actuator bracket x Body (without vsc)	19	194	14
Brake actuator assembly x Actuator bracket (with vsc)	5.4	55	48 in.*lbf
Brake actuator bracket x Body (with vsc)	19	194	14
Front speed sensor x Steering knuckle	8.0	82	71 in.*lbf
Front speed sensor wire harness clamp x shock absorber (Bolt A)	5.0	51	44 in.*lbf
Front speed sensor wire harness clamp x shock absorber (Bolt B)	19	192	14
Rear axle hub set bolt	80	816	59
Yaw rate sensor x Body	14	143	10

BRAKE

SERVICE DATA

Brake pedal height (from asphalt sheet)	143.3 to 153.3 mm (5.641 to 6.035 in.)
Brake pedal free play	Pedal free play: 1.0 to 6.0 mm (0.039 to 0.236 in.)
Stop light switch clearance	0.5 to 2.5 mm (0.020 to 0.098 in.)
Pedal reserve distance from asphalt sheet at 490 N (50 kgf, 110 lbf)	More than 77.0 mm (3.0 in.)
Brake booster push rod to piston clearance (with SST)	Clearance: 0 mm (0 in.)
Front brake pad thickness	Standard thickness: 12.0 mm (0.472 in.) Minimum thickness: 1.0 mm (0.039 in.)
Front brake disc thickness	Standard thickness: 28.0 mm (1.102 in.) Minimum thickness: 26.0 mm (1.024 in.)
Front brake disc runout	Maximum disc runout: 0.05 mm (0.0020 in.)
Rear brake pad thickness	Standard thickness: 10.0 mm (0.394 in.) Minimum thickness: 1.0 mm (0.039 in.)
Rear brake disc thickness	Standard thickness: 12.0 mm (0.472 in.) Minimum thickness: 10.5 mm (0.413 in.)
Rear brake disc runout	Maximum disc runout: 0.15 mm (0.0059 in.)

TORQUE SPECIFICATIONS

Part Tightened	N*m	kgf*cm	ft.*lbf
Bleeder plug	8.3	85	73 in.*lbf
Brake booster clevis lock nut	26	265	19
Brake pedal sub-assembly set bolt	37	375	27
Brake pedal support assembly x Reinforcement	20	204	15
Brake pedal support assembly x Body	13	130	9
Brake master cylinder x Brake booster	13	130	9
Brake line union nut	15	155	11
Wheel nut	103	1,050	76
Front brake cylinder mounting x Steering knuckle	107	1.090	79
Front brake cylinder x Front brake cylinder mounting	34	350	25
Front brake cylinder x Flexible hose	29	300	22
Rear disc brake cylinder mounting set bolt	62	630	46
Rear disc brake cylinder side pin x Rear disc brake cylinder mounting	43	440	32
Rear disc brake cylinder x Flexible hose	29	300	22

PARKING BRAKE

SERVICE DATA

Parking brake pedal travel at 300 N (31 kgf, 67.5 lbf)	9 to 11 notches	
Rear brake disc inside diameter	Standard	170 mm (6.69 in.)
	Maximum	171 mm (6.73 in.)
Parking brake shoe lining thickness	Standard	2.0 mm (0.079 in.)
	Maximum	1.0 mm (0.039 in.)
Parking brake shoe clearance between rear shoe and lever	Less than 0.35 mm (0.0138 in.)	

TORQUE SPECIFICATIONS

Part Tightened		N*m	kgf*cm	ft.*lbf
Wheel nut		103	1,050	76
Parking brake cable No. 1 lock nut		5.4	55	48 in.*lbf
Parking brake control pedal x Body		39	398	29
Parking brake switch set screw		0.9	9	7.8 in.*lbf
Parking brake cable No. 1 x Body	Nut	5.4	55	48 in.*lbf
	Bolt	13	128	9
Parking brake cable No. 1 x Parking brake cable No. 4		5.4	55	48 in.*lbf
Parking brake cable No. 3 x Body	Nut	6.0	61	53 in.*lbf
	Bolt A	8.5	87	75 in.*lbf
	Bolt B	6.0	61	53 in.*lbf
Parking brake cable No. 3 x Backing plate		8.0	82	71 in.*lbf
Rear disc brake caliper assembly LH set bolt		62	630	46

STEERING COLUMN

SERVICE DATA

STEERING SYSTEM		
Steering wheel freeplay	Maximum	30 mm (1.18 in.)

TORQUE SPECIFICATIONS

Part Tightened	N*m	kgf*cm	ft*lbf
Sliding yoke x Steering intermediate shaft	35	360	26
Sliding yoke x Steering column assembly	35	360	26
Steering column assembly set bolt	21	210	15
Steering wheel set nut	50	510	37
Steering wheel pad set screw (Torx screw)	8.8	90	78 in.*lbf

POWER STEERING

SERVICE DATA

POWER STEERING FLUID		
Fluid level rise	Maximum	5 mm (0.20 in.)
Fluid pressure at idle speed with valve closed		7,300 to 7,800 kPa (75 to 80 kgf/cm^2, 1,067 to 1,138 psi)
STEERING WHEEL		
Steering effort at idle speed	(Reference)	6.0 N*m (60 kgf*cm, 53 in.*lbf)
VANE PUMP ASSEMBLY		
Vane pump rotating torque		0.27 N*m (2.8 kgf*cm, 2.4 in.*lbf) or less
Vane pump shaft and vane pump housing oil clearance	STD	0.021 to 0.043 mm (0.0008 to 0.017 in.)
	Maximum	0.07 mm (0.0028 in.)
Vane plate thickness	Minimum	1.405 mm (0.0553 in.)
Clearance between the rotor groove and plate	Maximum	0.03 mm (0.0012 in.)
Spring free length	Minimum	36.9 mm (1.453 in.)
RACK & PINION POWER STEERING GEAR ASSEMBLY		
Steering rack runout	Maximum	0.1 mm (0.004 in.)
Tie rod assembly stad bolt torque	(Turning)	0.49 to 3.43 N*m (5.0 to 35.0 kgf*cm, 4.34 to 30.38 in.*lbf)
Total preload (Control valve rotating torque)	(Turning)	1.0 to 1.8 N*m (10 to 18 kgf*cm, 8.6 to 15.7 in.*lbf)
Rack boot clamp clearance		2.0 mm (0.079 in.) or less

TORQUE SPECIFICATIONS

Part tightened	N*m	kgf*cm	ft*lbf
VANE PUMP ASSEMBLY			
Vane pump housing rear x Vane pump housing front	22	220	16
Power steering oil pressure switch	21	210	15
Pressure port union sub-assembly	69	700	51
Power steering suction port union set bolt	12	120	9
Vane pump assembly x Pump bracket rear	37	380	27
Vane pump assembly set bolt	37	380	27
Pressure feed tube assembly x Vane pump assembly	41 (44)	420 (450)	30 (33)
Pressure feed tube assembly clamp set bolt	7.8	80	69 in.*lbf
RACK & PINION POWER STEERING GEAR ASSEMBLY			
Engine hanger set bolt	38	390	28
Control valve housing set bolt	18	185	13
Control valve shaft lock nut	25	250	18
Rack housing cap	59	600	43
Rack guide spring cap lock nut	43 (59)	400 (600)	32 (43)
Rack x Rack end sub-assembly	62 (83)	630 (850)	46 (61)
Turn pressure tube union nut	12 (13)	120 (130)	9 (9)
Tie rod end sub-assembly lock nut	74	750	54
Rack & pinion power steering gear assembly set bolt (2WD)	58	590	43
Rack & pinion power steering gear assembly set bolt (4WD)	82	835	60
Steering intermediate shaft x Control valve pinion shaft	35	360	26
Front suspension crossmember sub-assembly x Frame (Bolt A)	157	1,600	116
Front suspension crossmember sub-assembly x Frame (Bolt B)	113	1,152	83
Crossmember x Engine mounting insulator RR	52	530	38
Center member x Frame	60	612	44
Center member x Engine mounting insulator FR	52	530	38
Front suspension arm sub-assembly lower No. 1 x Lower ball joint	89	910	66
Front stabilizer link assembly set nut	74	750	55
Pressure feed tube assembly x Rack & pinion steering gear assembly	23 (25)	235 (255)	17 (18)
Steering gear outlet return tube x Rack & pinion steering gear assembly	23 (25)	235 (255)	17 (18)
Pressure feed tube clamp set bolt	7.8	80	69 in.*lbf
Tie rod end sub-assembly x Steering knuckle	49	500	36
Steering intermediate shaft assembly No. 2 set bolts	35	360	26
Front wheel set nut	103	1,050	76

( ): For use without SST

AIR CONDITIONING

SERVICE DATA

Refrigerant charge volume	Standard: 450 to 550 (15.9 to 19.4 oz.)
Magnetic clutch clearance	0.26 to 0.60 mm (0.010 to 0.024 in.)

TORQUE SPECIFICATIONS

Part Tightened	N*m	kgf*cm	ft*lbf
AIR CONDITIONING UNIT			
Air conditioner unit assembly x Body	9.8	100	87 in.*lbf
Instrument panel reinforcement assembly x Air conditioner unit assembly	9.8	100	87 in.*lbf
Instrument panel reinforcement assembly x Body (Driver seat)	17	173	13
Instrument panel reinforcement assembly x Body (Passenger seat)	6.0	61	53 in.*lbf
Instrument panel reinforcement assembly x Body (Passenger seat)	20	204	15
Suction Hose sub-assembly x Air conditioner unit assembly	9.8	100	87 in.*lbf
BLOWER UNIT			
Cooler evaporator sub-assembly x Cooler expansion Valve	3.5	35	30 in.*lbf
Air conditioner unit assembly x Body	9.8	100	87 in.*lbf
Instrument panel reinforcement assembly x Air conditioner unit assembly	9.8	100	87 in.*lbf
Instrument panel reinforcement assembly x Body (Driver seat)	17	173	13
Instrument panel reinforcement assembly x Body (Passenger seat)	6.0	61	53 in.*lbf
Instrument panel reinforcement assembly x Body (Passenger seat)	20	204	15
Suction Hose sub-assembly x Air conditioner unit assembly	9.8	100	87 in.*lbf
COMPRESSOR AND MAGNETIC CLUTCH			
Magnet clutch hub x Cooler compressor assembly	18	184	13
Compressor and magnet clutch x Engine	25	250	18
Cooler refrigerant discharge hose No. 1 x Compressor and magnet clutch	9.8	100	87 in.*lbf
Suction hose sub-assembly x Compressor and magnet clutch	9.8	100	87 in.*lbf
CONDENSER			
Radiator assembly x Cooler condenser assembly	5.0	51	44 in.*lbf
Cooler refrigerant discharge hose No. 1 x Cooler condenser assembly	9.8	100	87 in.*lbf
Air conditioner tube & accessory x Cooler condenser assembly	9.8	100	87 in.*lbf

SUPPLEMENTAL RESTRAINT SYSTEM

TORQUE SPECIFICATIONS

Part Tightened	N*m	kgf*cm	ft*lbf
Steering pad x Steering wheel assembly	8.8	90	78 in.*lbf
Front passenger airbag assembly x Instrument panel reinforcement	20	204	15
Curtain shield airbag assembly x Body	13	133	10
Curtain shield airbag assembly x Body	11	112	8
Driver side knee airbag assembly x Instrument panel reinforcement	10	102	7
Center airbag sensor assembly x Body	17.5	179	13
Front airbag sensor x Body	17.5	179	13
Side airbag sensor x Body	9.0	92	80 in.*lbf
Rear airbag sensor x Body	9.0	92	80 in.*lbf
Seat position airbag sensor x Front LH seat assembly	8.0	82	71 in.*lbf

SEAT BELT

TORQUE SPECIFICATIONS

Part Tightened	N*m	kgf*cm	ft.*lbf
Front seat x Body	37	377	27
Front seat inner belt assembly x Front seat	42	428	31
Front seat outer belt assembly (For upper bolt) x Body	5.5	56	49 in.*lbf
Front seat outer belt assembly (For lower bolt) x Body	42	428	31
Front seat outer belt assembly (Shoulder anchor) x Front shoulder belt anchor adjuster assembly	42	428	31
Front seat outer belt assembly (Floor side) x Body	42	428	31
Rear seat x Body	18	184	13
Rear seat inner with center belt assembly RH x Body	42	428	31
Rear seat inner with center belt assembly LH x Body	42	428	31
Rear seat inner with center belt assembly RH (Floor side) x Body	42	428	31
Rear seat outer belt assembly (Floor side) x Body	42	428	31

CRUISE CONTROL

TORQUE SPECIFICATIONS

Part Tightened	N*m	kgf*cm	ft.*lbf
Distance control ECU x Body	5	51	44 in.*lbf

LIGHTING

TORQUE SPECIFICATIONS

Part Tightened		N*m	kgf*cm	ft.*lbf
HEIGHT CONTROL SENSOR SUB-ASSEMBLY REAR LH				
Height control sensor sub-assembly rear LH x Rear suspension arm	Nut:	5.4	55	48 in.*lbf
Height control sensor sub-assembly rear LH x Rear suspension member	Nut:	8.0	81	71 in.*lbf

WIPER AND WASHER

TORQUE SPECIFICATIONS

Part Tightened	N*m	kgf*cm	ft.*lbf
Windshield wiper motor assembly x Windshield wiper link assembly	7.5	76	66 in.*lbf
Windshield wiper motor & link assembly x Body	7.0	71	62 in.*lbf
FR wiper arm & blade assembly LH x Windshield wiper link assembly	20	209	15
FR wiper arm & blade assembly RH x Windshield wiper link assembly	20	209	15

HORN

TORQUE SPECIFICATIONS

Part Tightened	N*m	kgf*cm	ft.*lbf
Low pitched horn x Body	20	204	15
High pitched horn x Body	20	204	15

INSTRUMENT PANEL

TORQUE SPECIFICATIONS

Part Tightened	N*m	kgf*cm	ft*lbf
Instrument Panel Reinforcement x Passenger Airbag	20	204	15

SEAT

TORQUE SPECIFICATIONS

Part Tightened	N*m	kgf*cm	ft*lbf
FRONT SEAT ASSEMBLY (POWER SEAT TYPE)			
Seat position airbag sensor x Seat adjuster assembly	8.0	82	71 in.*lbf
Seatback cover bracket x Seat adjuster assembly (w/ Side airbag)	5.5	56	49 in.*lbf
Front seat Inner belt assembly LH x Seat adjuster assembly	42	428	31
Front seat assembly LH x Body	37	377	27
FRONT SEAT ASSEMBLY (MANUAL SEAT TYPE)			
Seat position airbag sensor x Seat adjuster assembly	8.0	82	71 in.*lbf
Seatback cover bracket x Seat adjuster assembly (w/ Side airbag)	5.5	56	49 in.*lbf
Front seat Inner belt assembly RH x Seat adjuster assembly	42	428	31
Front seat assembly RH x Body	37	375	27
REAR SEAT ASSEMBLY			
Reclining adjuster arm sub-assembly RH x Body	18	184	13
Reclining adjuster arm sub-assembly LH x Body	18	184	13
Rear seat center armrest bracket assembly x Rear seat armrest assembly center	8.3	85	74 in.*lbf
Rear seat center armrest bracket assembly x Rear seat armrest assembly center	5.4	55	49 in.*lbf
Rear seatback assembly LH x Body	18	184	13
Rear seatback assembly RH x Body	18	184	13

ENGINE HOOD / DOOR

TORQUE SPECIFICATIONS

Part Tightened	N*m	kgf*cm	ft*lbf
HOOD			
Hood x Hood hinge	13	133	10
FRONT DOOR			
Front door check assembly (door panel side bolt) x Door panel	5.5	56	49 in.*lbf
Front door outside handle frame sub-assembly x Door panel	4.0	41	35 in.*lbf
Front door lock assembly x Door panel	5.0	51	44 in.*lbf
Front door outside handle cover installation bolt (torx)	4.0	41	35 in.*lbf
Front door frame sub-assembly rear lower x Door panel	6.2	63	55 in.*lbf
Power window regulator motor assembly x Front door window regulator	5.4	55	48 in.*lbf
Front door window regulator sub-assembly x Door panel	8.0	82	71 in.*lbf
Front door glass sub-assembly x Front door window regulator sub-assembly	8.0	82	71 in.*lbf
Front door hinge x Body	26	265	19
Front door hinge x Door panel	26	265	19
Front door lock striker x Body	23	235	17
Outer rear view mirror assembly x Door panel	8.0	82	71 in.*lbf
REAR DOOR			
Power window regulator motor assembly x Rear door window regulator	5.4	55	48 in.*lbf
Rear door check assembly (door panel side bolt) x Door panel	5.5	56	49 in.*lbf
Rear door outside handle frame sub-assembly x Door panel	4.0	41	35 in.*lbf
Rear door outside handle cover installation bolt (torx)	4.0	41	35 in.*lbf
Rear door lock assembly x Door panel	5.0	51	44 in.*lbf
Rear door window regulator sub-assembly x Door panel	8.0	82	71 in.*lbf
Rear Door window division bar x Door panel (Bolt A)	6.2	63	55 in.*lbf
Rear door hinge x Body	26	265	19
Rear door hinge x Door panel	26	265	19
Rear door lock striker x Body	23	235	17
BACK DOOR			
Back door lock assembly x Door panel	7.0	71	62 in.*lbf
Back door outside handle x Door panel	4.0	41	35 in.*lbf
Back door outside garnish sub-assembly x Door panel	4.0	41	35 in.*lbf
Back door hinge x Body	19.5	199	14
Back door hinge x Door panel	19.5	199	14
Back door lock striker x Body	11.5	117	8.5

EXTERIOR

TORQUE SPECIFICATIONS

Part Tightened	N*m	kgf*cm	ft*lbf
FRONT BUMPER			
Front bumper reinforcement x Body	92	938	68
Front bumper cover x Body	23	235	17
Radiator grille x Body	23	235	17
REAR BUMPER			
Rear bumper mounting bracket x Body	55	560	41
Rear bumper reinforcement x Body	55	560	41
Rear bumper cover x Body	6.0	61	53 in.*lbf

SLIDING ROOF

TORQUE SPECIFICATIONS

Part Tightened	N*m	kgf*cm	ft*lbf
Sliding roof glass assembly x Drive cable	4.5	46	40 in.*lbf
Sliding roof housing sub-assembly x Body	5.4	55	49 in.*lbf
Sliding roof housing sub-assembly x Sliding roof piece sub-assembly	2.0	20	18 in.*lbf
Sliding roof housing sub-assembly x Sliding roof drive gear sub-assembly	5.4	55	49 in.*lbf

SLIDING ROOF SYSTEM

PARTS LOCATION

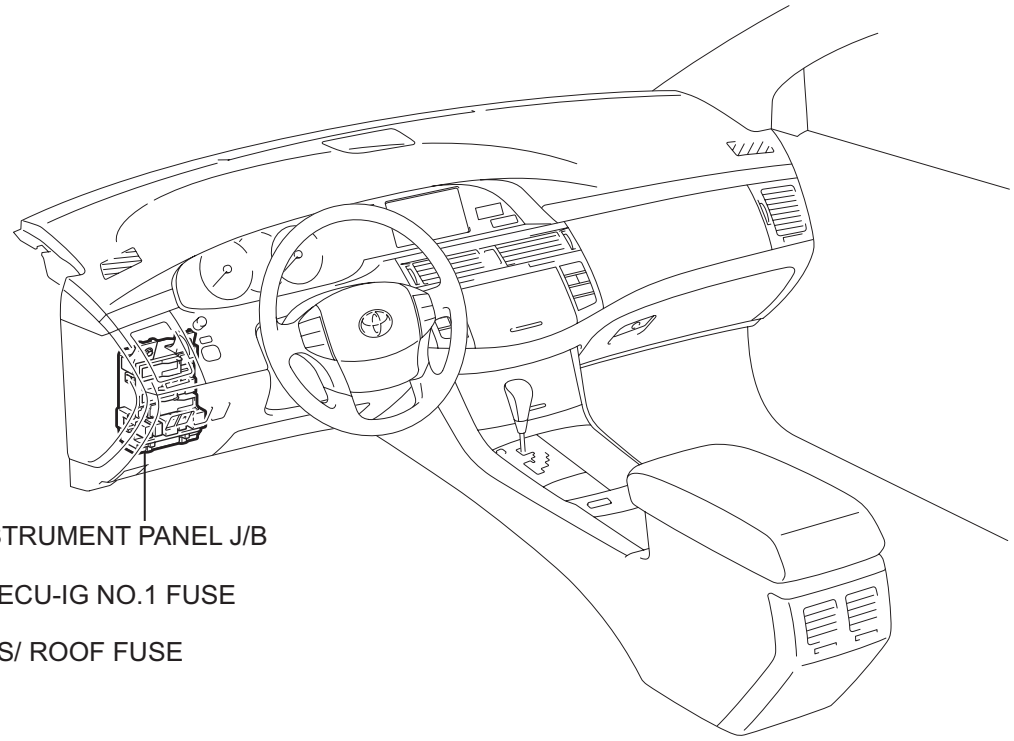

INSTRUMENT PANEL J/B

- ECU-IG NO.1 FUSE
- S/ ROOF FUSE

SLIDING ROOF DRIVE GEAR ASSEMBLY

(SLIDING ROOF CONTROL ECU)

- SLIDING ROOF ECU
- SLIDING ROOF MOTOR

SLIDING ROOF HOUSING

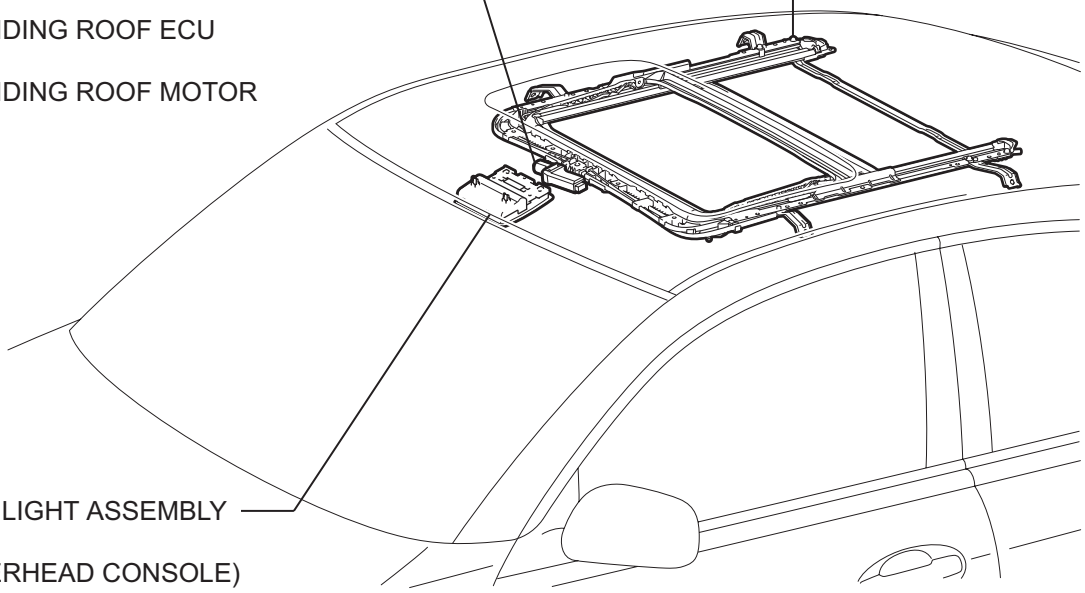

MAP LIGHT ASSEMBLY

(OVERHEAD CONSOLE)

- SLIDING ROOF SWITCH ASSEMBLY

P

B115016E01

RF

SYSTEM DIAGRAM

1. SYSTEM DIAGRAM

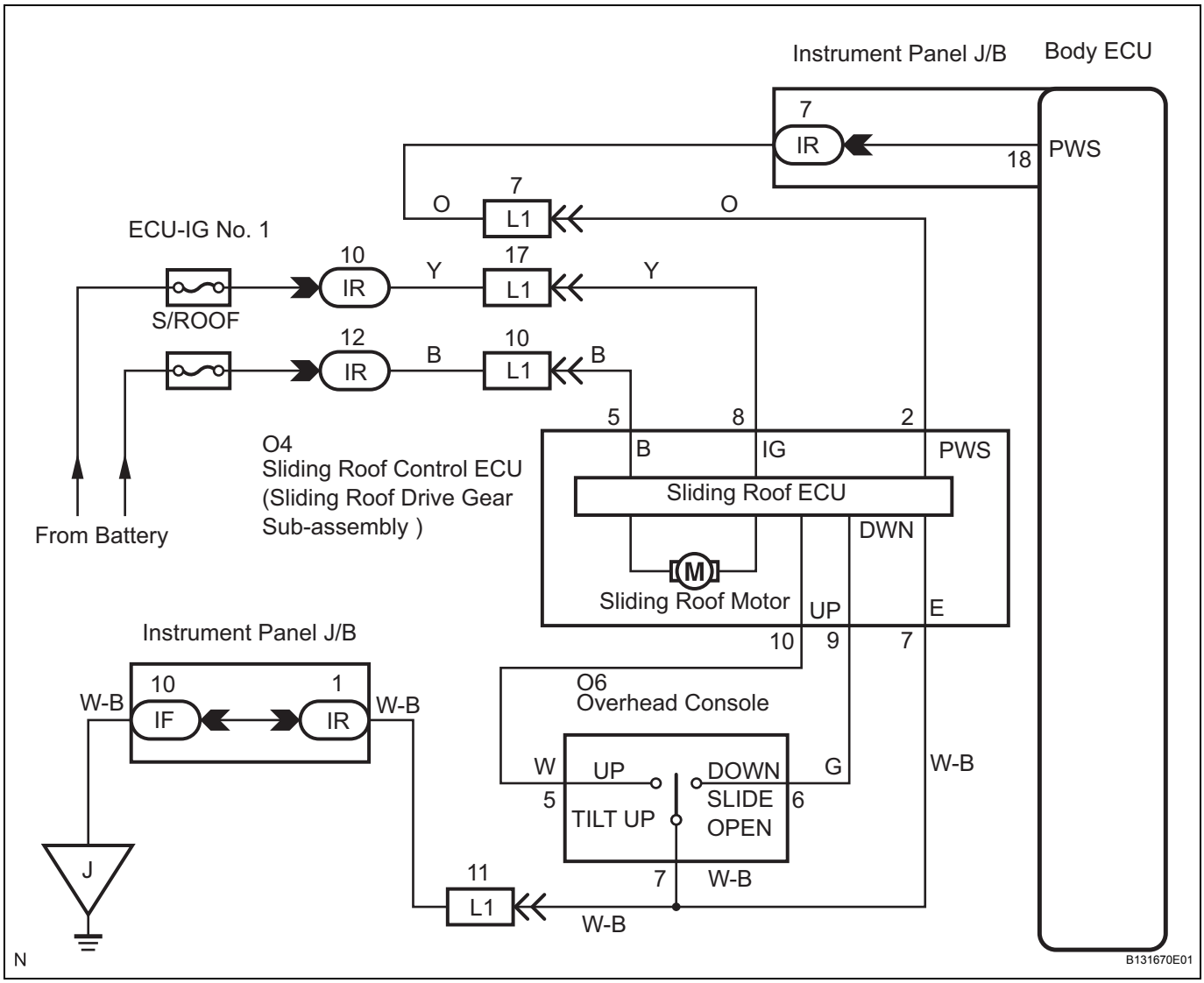

2. SYSTEM OUTLINE

In the system, the sliding roof control ECU detects changes in the motor rotation to allow opening/closing and tilting up/down of the sliding roof using one touch operation. Additionally, jam protection mechanism is provided.

Voltage is always applied from the S/ROOF fuse to TERMINAL 5 of the sliding roof control ECU. When the ignition switch is turned on (IG), voltage is applied from the ECU-IG No.1 fuse to TERMINAL 8 of the sliding roof control ECU.

(a) SLIDING OPEN OPERATION

(1) When the sliding roof control switch is pressed to the OPEN position, a signal is input from TERMINAL 6 of the sliding roof control switch to TERMINAL 9 of the sliding roof control ECU. This activates the sliding roof control ECU, which rotates the motor to open the sliding roof. The sliding roof control ECU determines that the sliding roof is opened (30 mm (1.18 in.) from the fully opened position), and stops the motor rotation. When the sliding roof control switch is pressed to the OPEN position again, it fully opens the sliding roof.

If order operation or open switches are operated while the sliding roof is being opened, the sliding roof control ECU activates to stop the sliding roof operation. While the sliding roof is tilted up, the slide open operation does not function.

(b) SLIDE CLOSE OPERATION

(1) When the sliding roof control switch is pressed to the CLOSE position, a signal is input from TERMINAL 5 of the sliding roof control switch to TERMINAL 10 of the sliding roof control ECU. This activates the sliding roof control ECU and rotates the motor which automatically closes the sliding roof. The sliding roof control ECU determines that the sliding roof is fully closed, and stops the motor rotation.

If other operation or close switches are operated while the sliding roof is being closed, the sliding roof control ECU activates to stop the sliding roof operation.

(c) TILT UP OPERATION

(1) When the sliding roof control switch is pressed to the TILT UP position, a signal is input from TERMINAL 5 of the sliding roof control switch to TERMINAL 10 of the sliding roof control ECU. This activates the sliding roof control ECU and rotates the motor, which automatically tilts up the sliding roof. The sliding roof control ECU determines that the sliding roof is fully tilted up and the motor has stopped, and stops the current flowing into the motor.
If other operation or tilt up switches are operated while the sliding roof is being tilted up, the sliding roof control ECU activates to stop the sliding roof operation. While the sliding roof is open, the tilt up operation does not function.

(d) TILT DOWN OPERATION

(1) When the sliding roof control switch is pressed to the TILT DOWN position, the signal is input from TERMINAL 6 of the sliding roof control switch to TERMINAL 9 of the sliding roof control ECU. This activates the sliding roof control ECU and rotates the motor, which automatically tilts down the sliding roof. The sliding roof control ECU determines that the sliding roof is fully closed and the motor has stopped, and stops the current flowing into the motor.
If other operation or tilt down switches are operated while the sliding roof is being tilted down, the sliding roof control ECU activates to stop the sliding roof operation.

(e) JAM PROTECTION FUNCTION

(1) If the sliding roof control ECU detects a caught object from changes in the motor rotation during slide close or tilt down operation, the operation is stopped and then the motor is rotated in the reverse direction.
Slide close operation:
The sliding roof is moved approximately 200 mm (7.78 in.) in the reverse direction (slide open) after a caught object has been detected.
However, if the full open position is detected before moving approximately 200 mm (7.78 in.), the reverse movement is stopped.
Tilt down operation:
If a caught object is detected during tilt down operation, the sliding roof is fully tilted up.

(f) KEY OFF SLIDING ROOF OPERATION

(1) The sliding roof can also be operated for approximately 43 seconds after the ignition switch is turned from on (IG) to off with all doors closed. However, if the driver side door is opened during the operation, the operation is canceled.

(g) FAIL SAFE FUNCTION

(1) If the sliding roof is operated continuously in the same operating direction, the current flowing into the motor is cut off when the time shown below has elapsed after the motor operation is started.
Slide open/close operation with the sliding roof control switch: Approximately 20 seconds.
Tilt up/down operation with the sliding roof control switch: Approximately 3.5 seconds.
Slide open operation for reverse movement when activating the jam protection function: Approximately 20 seconds.
Tilt open operation for reverse movement when activating the jam protection function: Approximately 3.5 seconds.

INITIALIZATION

1. INITIALIZATION OF SLIDING ROOF MOTOR

(a) The sliding roof AUTO operation and the jam protection function may not operate normally if the battery is disconnected/reconnected, replaced or recharged. Initialize the sliding roof system using the method below.

(1) Turn the ignition switch on (IG).

(2) Initialize the sliding roof by pressing and holding the TILT UP switch until the roof glass tilts upward fully (the roof glass automatically tilts downward slightly after fully tilting upward).

(3) Release the switch.

HINT:

If the battery terminal is disconnected, the sliding roof control ECU may not detect the position of the roof glass. If the sliding roof AUTO operation is still disabled even after the sliding roof drive gear has been initialized, the hall IC may be malfunctioning. The hall IC is built into the sliding roof drive gear and detects the roof glass position.

If the result is not as specified, replace the drive gear assembly (sliding roof control ECU).

PROBLEM SYMPTOMS TABLE

SLIDING ROOF SYSTEM

Symptom	Suspected area	See page
Sliding roof does not operate	1. Faulty sliding of sliding roof	RF-5
	2. ECU-IG No.1 fuse	-
	3. S/ROOF fuse	-
	4. Slide roof motor switch	RF-20
	5. Sliding roof drive gear sub-assembly	RF-6
	6. Wire harness	-
Sliding roof operation is abnormal	1. Slide roof motor switch	RF-20
	2. Sliding roof drive gear sub-assembly	RF-6
	3. Wire harness	-
Sliding roof system stops operation halfway even when no foreign object is in the motor	1. Resetting sliding roof drive gear	RF-5
	2. Slide roof motor switch	RF-20
	3. Sliding roof drive gear sub-assembly	RF-6
	4. Wire harness	-
Sliding roof does not operate after turning the ignition switch off	1. Instrument panel J/B (Multiplex network body ECU)	MP-10
	2. Wire harness	-
AUTO function is inoperative	1. Resetting sliding roof drive gear	RF-5
Jam protection function is inoperative	1. Resetting sliding roof drive gear	RF-5

ON-VEHICLE INSPECTION

1. CHECK THE AUTO SLIDE-OPEN / CLOSE OPERATION

NOTICE:

If the sliding roof system has not been initialized, AUTO slide open/close operation will not function.

HINT:

Initialize the sliding roof system after any of the following:

- The battery is disconnected.
- The S/ROOF fuse is replaced.
- The sliding roof control ECU (sliding roof drive gear sub-assembly) is replaced.
- The sliding roof is removed and then reinstalled or replaced.

(a) Initialize the sliding roof system.
  (1) Turn the ignition switch on (IG).
  (2) Using the tilt up switch, tilt the roof fully upward, and then using the slide open switch, tilt the roof fully downward.
  (3) Using the slide open switch, fully open the roof, and then using the tilt up switch, fully close it.

(b) Check the AUTO slide-open operation.
  (1) Turn the ignition switch on (IG).
  (2) If the roof glass is not fully closed, slide or tilt it so that it is fully closed.
  (3) Press the sliding roof OPEN switch for 0.3 seconds or more. The roof glass should automatically slide open and stop slightly before the fully open position.

(c) Check the AUTO slide-close operation.
  (1) Turn the ignition switch on (IG).
  (2) Press the sliding roof CLOSE (tilt up) switch for 0.3 seconds or more. The roof glass should automatically close.
  (3) If the TILT UP or SLIDE OPEN switch is pressed while the roof glass is in motion, the roof glass will stop moving.
  (4) If the roof glass cannot be fully closed using the AUTO operation (due to the jam protection function):
    - Visually check if there is any foreign object between the sliding roof rail and the sliding roof glass.
    - Check if the alignment of the sliding roof glass is within the specified range (See page RF-5).

    If no problems are found with the above checks, then perform the following operation to fully close the roof glass forcedly and check if the AUTO operation returns to normal. (Forced operation)

Perform forced operation.*

Caution:

The jam protection function does not operate during forced operation.

Be careful not to get any part of your body caught between the vehicle body and the roof glass.

*: Pressing and holding the tilt up switch prevents the jam protection function approx. 10 sec. after starting the reverse operation.

If the switch is pressed continuously, the sliding roof starts the close operation and stops when the fully closed position is detected.

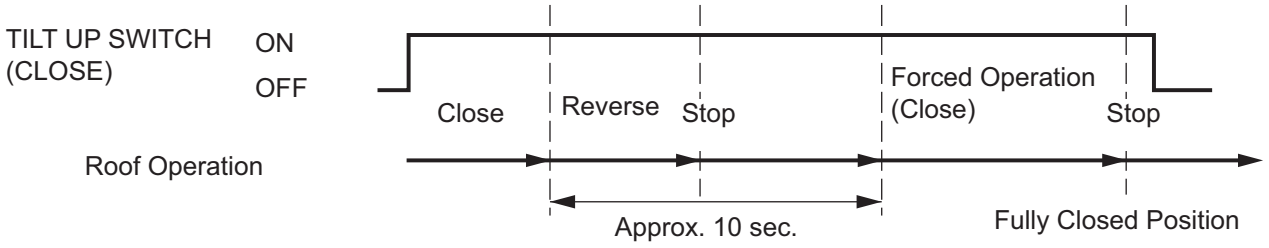

If the roof glass does not operate normally even after performing the above procedures, then replace the sliding roof control ECU (Sliding roof drive gear sub-assembly).

2. CHECK THE AUTO TILT-UP / DOWN OPERATION

NOTICE:

If the sliding roof system has not been initialized, then AUTO slide tilt up/down operation will not function.

HINT:

Initialize the sliding roof system after any of the following:

- The battery is disconnected.
- The S/ROOF fuse is replaced.
- The sliding roof control ECU (sliding roof drive gear sub-assembly) is replaced.
- The sliding roof is removed and then reinstalled or replaced.

(a) Initialize the sliding roof system.
  (1) Turn the ignition switch on (IG).
  (2) Using the tilt up switch, tilt the roof fully upward, and then using the slide open switch, tilt the roof fully downward.
  (3) Using the slide open switch, fully open the roof, and then using the tilt up switch, fully close it.

(b) Check AUTO tilt-up operation.
  (1) Turn the ignition switch on (IG).

RF

(2) If the roof glass is not fully closed, slide or tilt it so that it is fully closed.
(3) Press the sliding roof UP switch for 0.3 seconds or more. The roof glass should automatically tilt upward until it is fully open.

(c) Check the AUTO tilt-down operation.
(1) Turn the ignition switch on (IG).
(2) When the roof glass is fully tilted upward, press the sliding roof DOWN switch for 0.3 seconds or more. The roof glass should automatically tilt downward until it is fully closed.
(3) If the TILT UP or SLIDE OPEN switch is pressed while the roof glass is in motion, the roof glass will stop moving.
(4) If the roof glass cannot be fully tilted down using the AUTO operation (due to the jam protection function):
- Visually check if there is any foreign object between the sliding roof rail and the sliding roof glass.
- Check if the alignment of the sliding roof glass is within the specified range (See page RF-5).

If no problems are found with the above checks, then perform the following operation to fully tilt down the roof glass forcedly and check if the AUTO operation returns to normal. (Forced operation)

Perform forced operation.*

Caution:

The jam protection function does not operate during forced operation.

Be careful not to get any part of your body caught between the vehicle body and the roof glass.

*: Pressing and holding the slide open switch prevents the jam protection function approx. 10 sec. after starting the reverse operation.

If the switch is pressed continuously, the sliding roof starts the down operation and stops when the fully down position is detected.

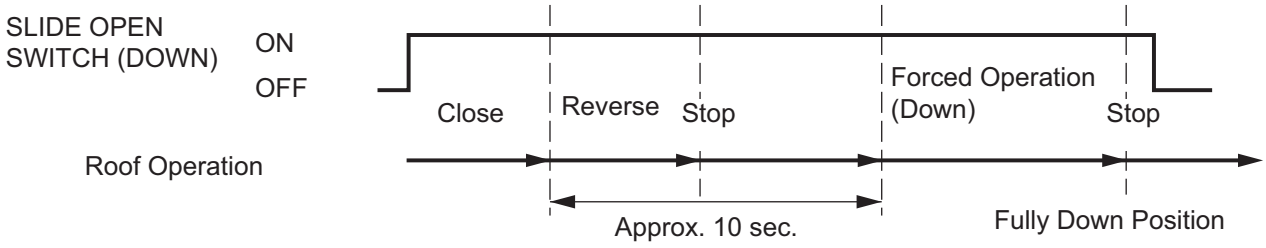

C B115071E03

If the roof glass does not operate normally even after performing the above procedures, then replace the sliding roof control assembly.

3. CHECK KEY-OFF SLIDING ROOF OPERATION

HINT:

The sliding roof can be operated for approximately 43 seconds after the ignition switch is turned from on (IG) to off with all doors closed. However, if the driver side door is opened during the operation, the operation will be canceled.

(a) Check the sliding roof operation function after the ignition switch is turned form on (IG) to off.

(1) After turning the ignition switch from on (IG) to off, the sliding roof AUTO operation will be possible. However, opening the driver side door should disable AUTO operation.

(2) After turning the ignition switch from on (IG) to off, wait approximately 43 seconds and check that the AUTO operation will be prohibited.

(3) Turn the ignition switch from on (IG) to off with the driver side door open. AUTO operation will immediately stop functioning.

If operation is not as specified, the inspect each part following the problem symptoms table (See page RF-5).

RF

4. CHECK JAM PROTECTION FUNCTION

HINT:

When sliding roof AUTO operation is being used, the jam protection function prevents objects from being caught between the vehicle body and the roof glass.

(a) Operative condition:
  (1) AUTO CLOSE with ignition switch on (IG).
  (2) AUTO CLOSE during sliding operation after the ignition switch is turned off.
  (3) AUTO TILT-DOWN with ignition switch on (IG).
  (4) AUTO TILT-DOWN during sliding operation after the ignition switch is turned off.

CAUTION:
- **Do not use any part of your body such as your hand, or any object to check the jam protection function. Do not allow anything to become caught in the sliding roof by accident during this procedure.**
- **The jam protection function may not work against an object less than 5 mm (0.20 in.) in width.**

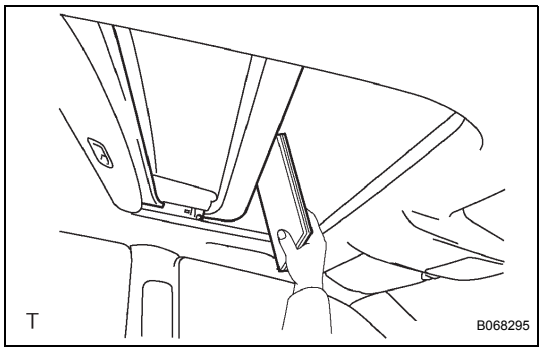

(b) When the sliding roof AUTO operation is being used and an object is caught between the vehicle body and the roof glass, the roof glass should open a distance of 200 mm (7.87 in.) from the point of contact with the object, or open fully if 200 mm (7.87 in.) of opening distance is not available.

5. CHECK FAIL-SAFE FUNCTION

(a) If the sliding roof's jam protection function is triggered and, afterward, the sliding roof cannot be fully closed due to a malfunctioning sliding roof or a malfunctioning actuator, press and hold the TILT UP switch for at least 10 seconds. This will disable the jam protection function and the sliding roof can then be closed.

CAUTION:

Be careful with the closing sliding roof glass. The jam protection function does not operate this time.

HINT:
- Before checking the fail-safe function, make sure that there is nothing that triggers the jam protection function.
- Pressing the TILT UP switch for 10 seconds will clear the memory of the sliding roof's fully closed position from the moon roof control ECU, which disables the jam protection function.

6. CHECK SLIDING ROOF DRIVE GEAR SUB-ASSEMBLY

(a) Disconnect the sliding roof drive gear sub-assembly wire harness connector.

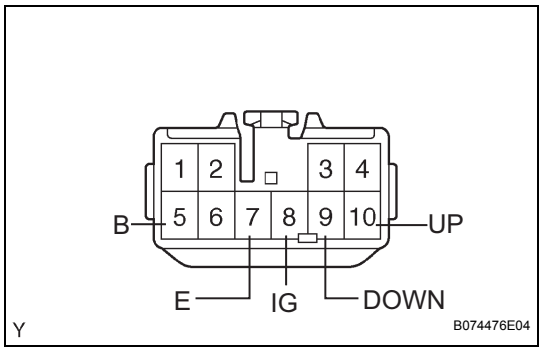

(b) Measure the resistance of the wire harness side connector.

Resistance

Symbols (Terminal No.)	Wiring color	Condition	Specified condition
E(7) ⟷ Body ground	W-B ⟷ Body ground	Always	Below 1 Ω
DOWN (9) ⟷ E (7)	G ⟷ W-B	Sliding roof switch UP → DOWN	Below 100 Ω
UP (10) ⟷ E (7)	W ⟷ W-B	Sliding roof switch DOWN → UP	Below 100 Ω

(c) Measure the voltage of the wire harness side connector.

Voltage

Symbols (Terminal No.)	Wiring color	Condition	Specified condition
B (5) ⟷ E (7)	B ⟷ W-B	Always	10 to 14 V
IG (8) ⟷ E (7)	Y ⟷ W-B	Ignition switch OFF → on (IG)	Below 1 V → 10 to 14 V
PWS (2) ⟷ E (7)	O ⟷ W-B	Ignition switch on (IG)	6 V or higher
PWS (2) ⟷ E (7)	O ⟷ W-B	Ignition switch LOCK or ACC	Below 2 V*

HINT:
*: Exceptions: During 43 second period after ignition switch on (IG) → off (ACC) or until driver or front passenger door in opened after ignition switch on (IG) → off (ACC).
If the value is not as specified, there way be a malfunction in the wire harness side.

(d) Reconnect the sliding roof drive gear sub-assembly wire harness connector.

(e) Initialize the sliding roof position (See page RF-5).

(f) Check the voltage of the terminals of the wire harness side connector.

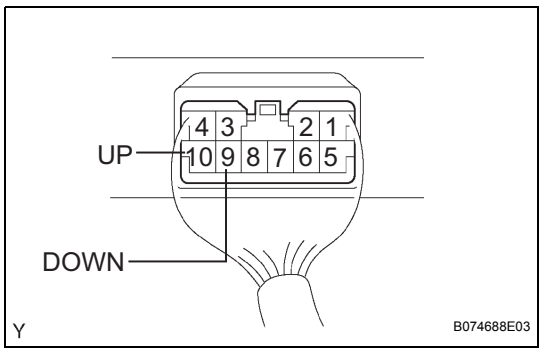

Voltage

Symbols (Terminal No.)	Wiring color	Condition	Specified condition
DOWN (9) ⟷ E (7)	G ⟷ W-B	Ignition switch: on (IG) Sliding roof switch: UP → DOWN	Approx. 5 V → Below 1 V
UP (10) ⟷ E (7)	W ⟷ W-B	Ignition switch: on (IG) Sliding roof switch: DOWN → UP	Approx. 5 V → Below 1 V

If the result is not as specified, replace the sliding roof drive gear sub-assembly (sliding roof control ECU).

SLIDING ROOF HOUSING

COMPONENTS

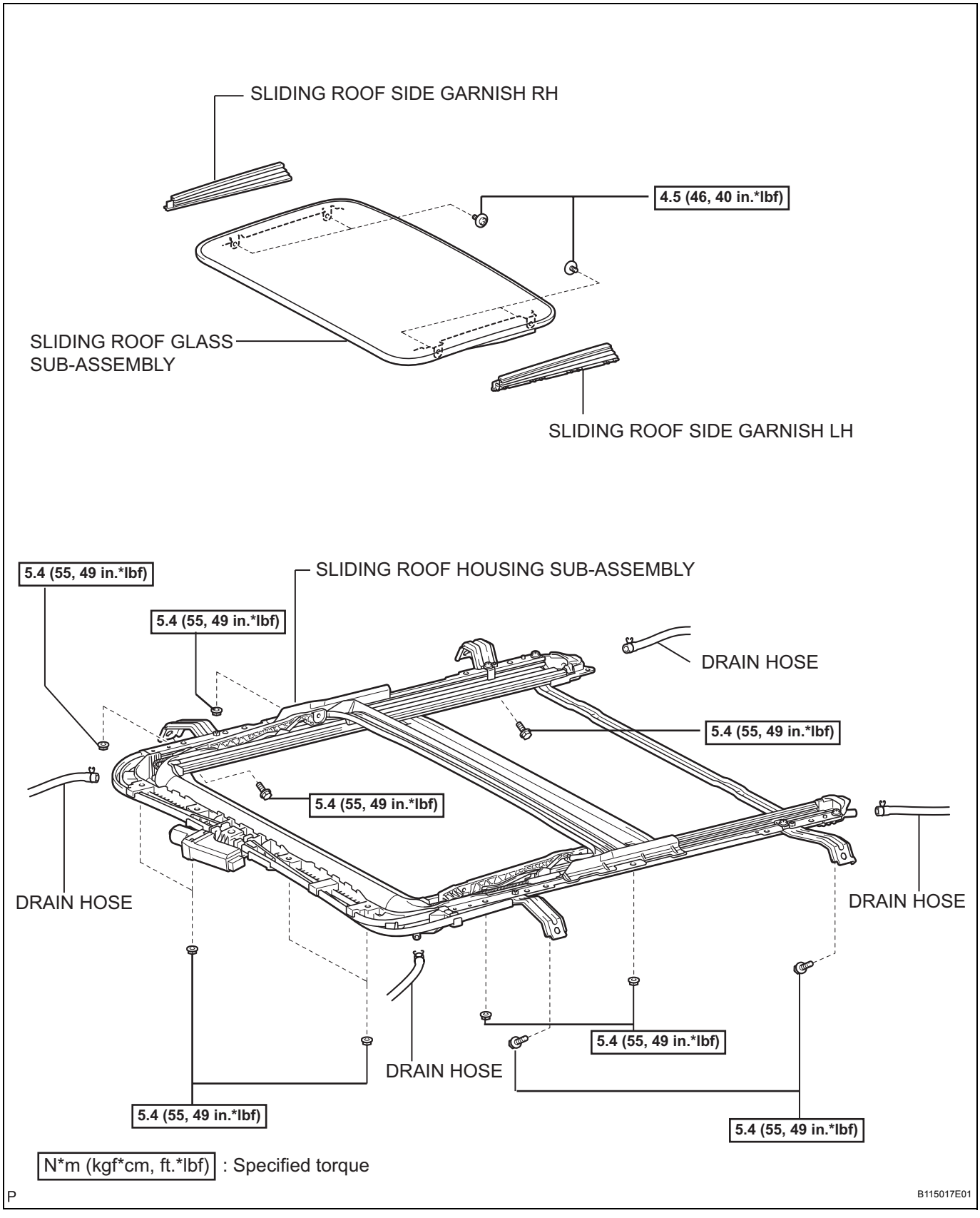

RF

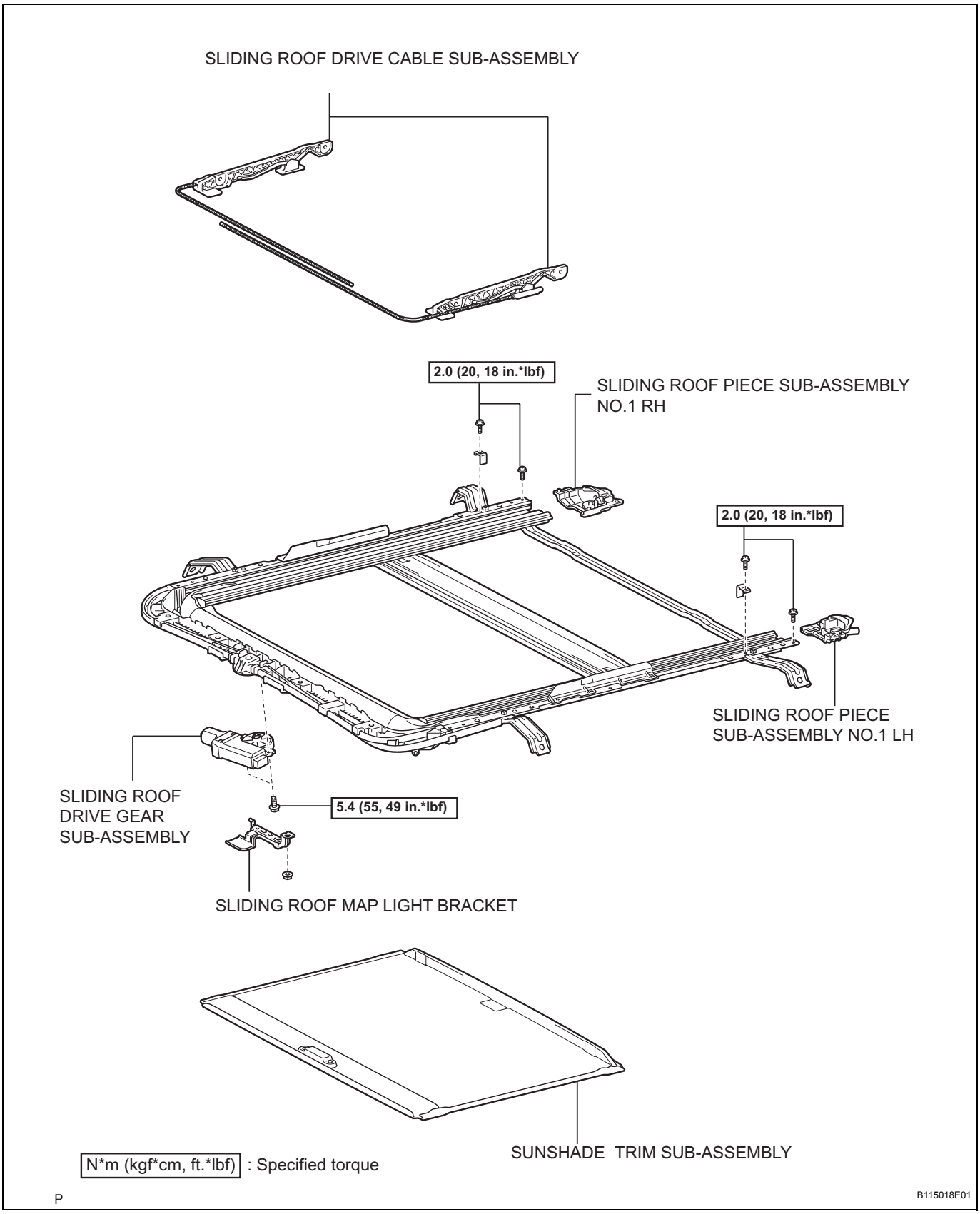
SLIDING ROOF DRIVE CABLE SUB-ASSEMBLY
2.0 (20, 18 in.*lbf)
SLIDING ROOF PIECE SUB-ASSEMBLY NO.1 RH
2.0 (20, 18 in.*lbf)
SLIDING ROOF PIECE SUB-ASSEMBLY NO.1 LH
SLIDING ROOF DRIVE GEAR SUB-ASSEMBLY
5.4 (55, 49 in.*lbf)
SLIDING ROOF MAP LIGHT BRACKET
SUNSHADE TRIM SUB-ASSEMBLY
N*m (kgf*cm, ft.*lbf) : Specified torque
P
B115018E01

RF

REMOVAL

1. REMOVE ROOF HEADLINING ASSEMBLY

(a) Remove the roof headlining assembly (See page IR-11).

HINT:

Refer to the procedures up to "REMOVE ROOF HEADLINING ASSEMBLY".

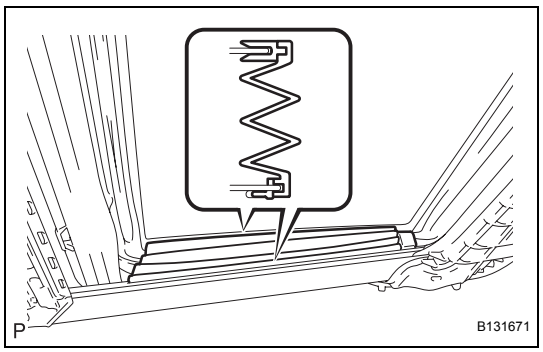

2. REMOVE SLIDING ROOF SIDE GARNISH LH

(a) Remove the sliding roof side garnish LH.

3. REMOVE SLIDING ROOF SIDE GARNISH RH

HINT:

Removal of the sliding roof side garnish RH is the same as the sliding roof side garnish LH.

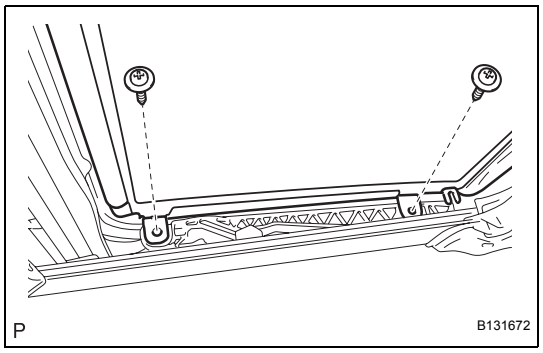

4. REMOVE SLIDING ROOF GLASS SUB-ASSEMBLY

(a) Using a torx driver (T25), remove the 4 torx screws and sliding roof glass sub-assembly.

5. REMOVE SLIDING ROOF HOUSING SUB-ASSEMBLY

(a) Protect the curtain shield airbag.

NOTICE:

Cover the curtain shield airbag with the protection cover as soon as the front pillar garnish is removed.

(b) Disconnect the 4 drain hoses.

(c) Remove the 4 bolts, 8 nuts and the sliding roof housing sub-assembly.

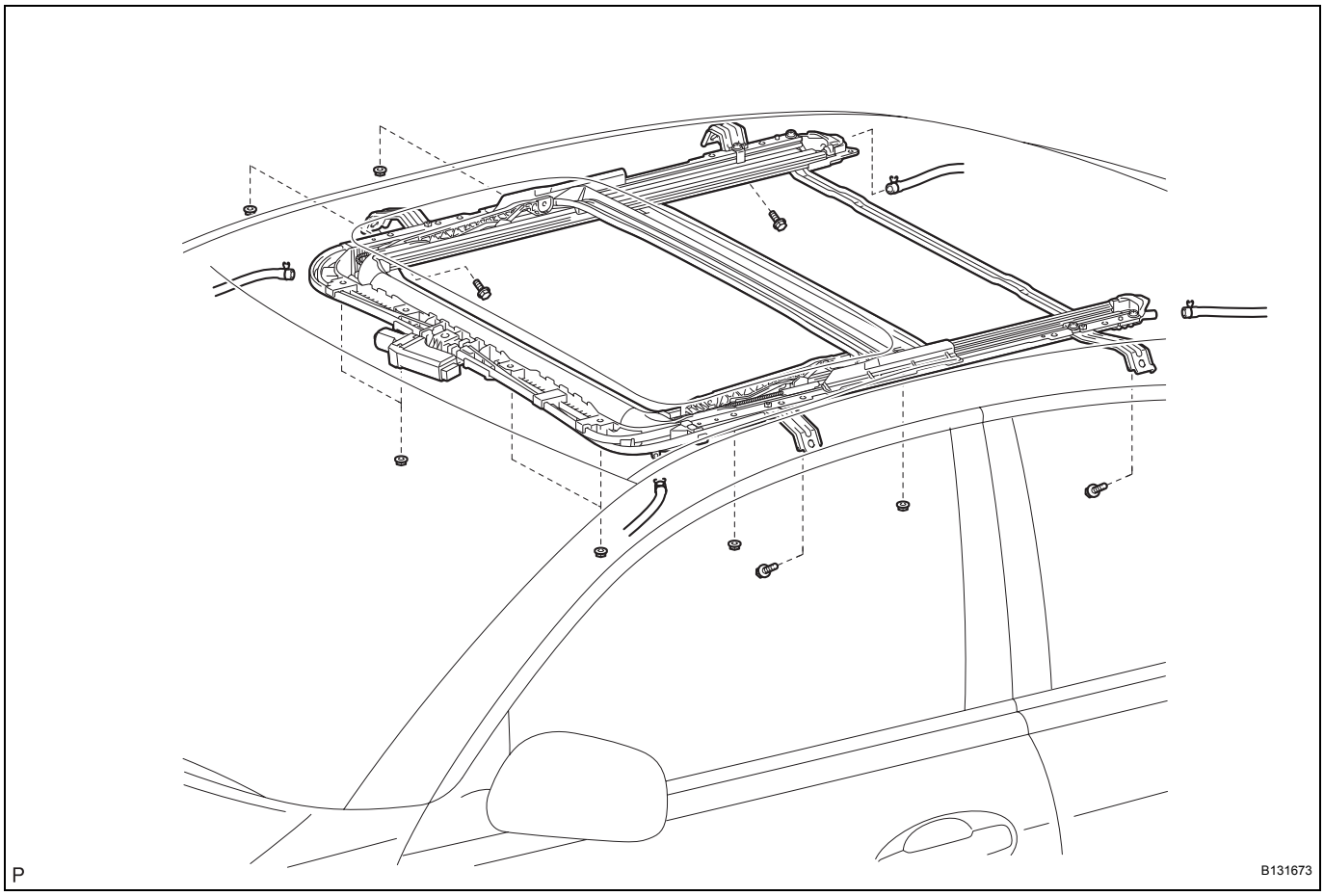

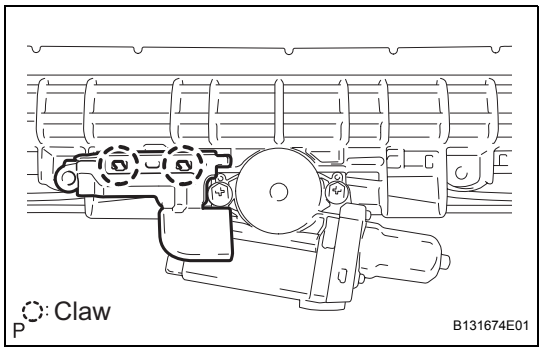

6. REMOVE SLIDING ROOF DRIVE GEAR SUB-ASSEMBLY

(a) Disengage the 2 claws and remove the sliding roof map light bracket.

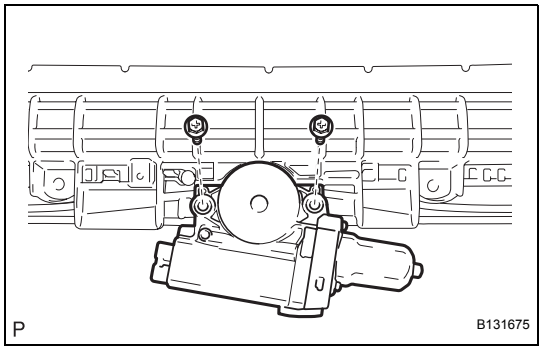

(b) Remove the 2 bolts and the sliding roof drive gear sub-assembly.

7. REMOVE SUNSHADE TRIM SUB-ASSEMBLY

RF

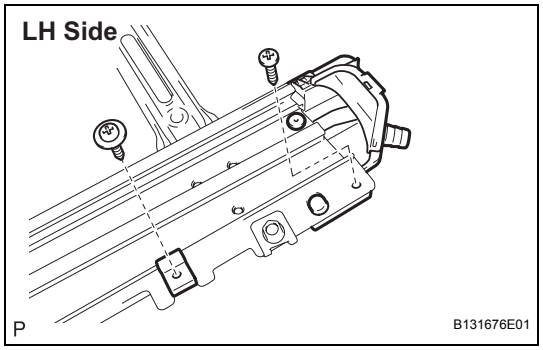

8. REMOVE SLIDING ROOF DRIVE CABLE SUB-ASSEMBLY

(a) Remove the 2 screws and the sliding roof piece sub-assembly No.1 LH.
HINT:
Use the same procedures for the RH side.

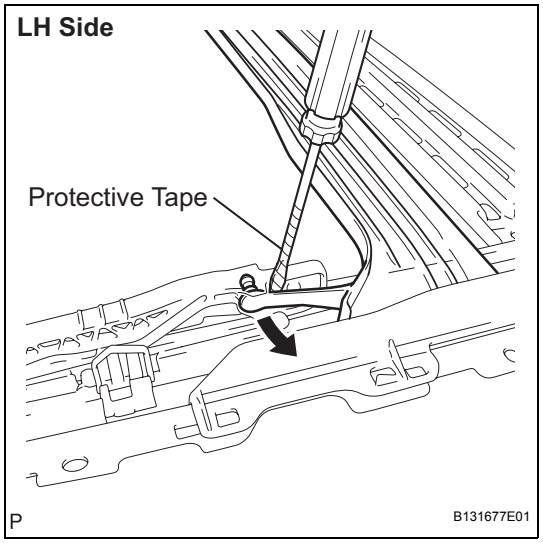

(b) Using a screwdriver, disengage the claw.
HINT:
- Tape the screwdriver tip before use.
- Use the same procedures for the RH side.

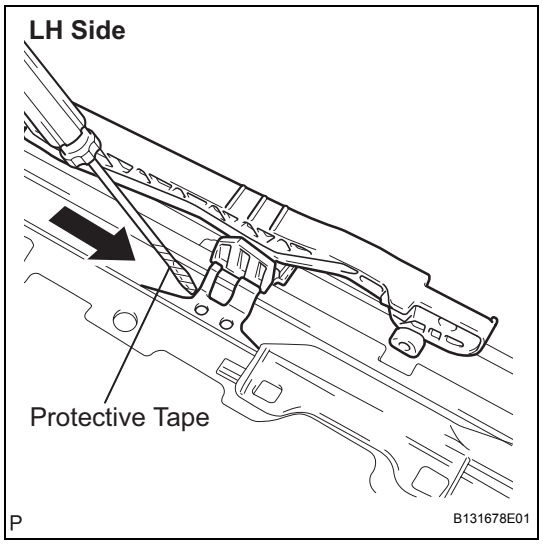

(c) Slide the sliding roof drive cable sub-assembly backward and remove it.
HINT:
- Tape the screwdriver tip before use.
- Use the same procedures for the RH side.

RF

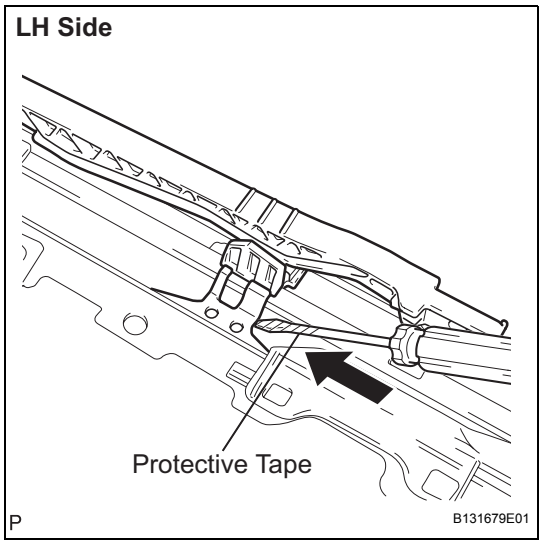

INSTALLATION

1. INSTALL SLIDING ROOF DRIVE CABLE SUB-ASSEMBLY

(a) Slide the sliding roof drive cable sub-assembly frontward and install it.
HINT:
- Tape the screwdriver tip before use.
- Use the same procedures for the RH side.

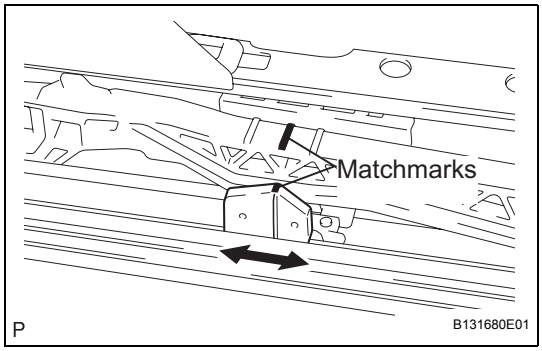

2. ADJUST FULLY CLOSED POSITION

(a) Using a screwdriver, slide the sliding roof drive cable sub-assembly to align the matchmarks.
HINT:
Tape the screwdriver tip before use.

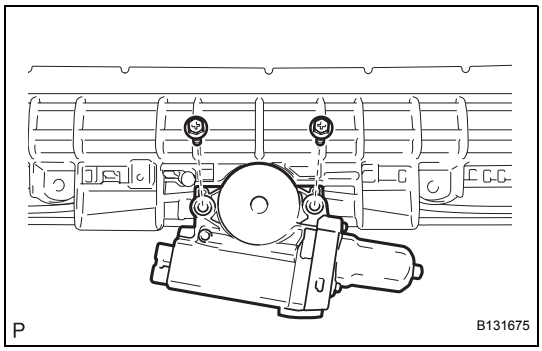

3. INSTALL SLIDING ROOF DRIVE GEAR SUB-ASSEMBLY

(a) Install the sliding roof drive gear sub-assembly with the 2 bolts.
Torque: 5.4 N*m (55 kgf*cm, 49 in.*lbf)

(b) Engage the 2 claws to install the sliding roof map light bracket.

4. INSTALL SLIDING ROOF HOUSING SUB-ASSEMBLY

(a) Install the sliding roof housing sub-assembly with the 8 nuts and 4 bolts.
Torque: Bolt
5.4 N*m (55 kgf*cm, 49 in.*lbf)
Nut
.5.4 N*m (55 kgf*cm, 49 in.*lbf)

(b) Install the 4 drain hoses to the housing.

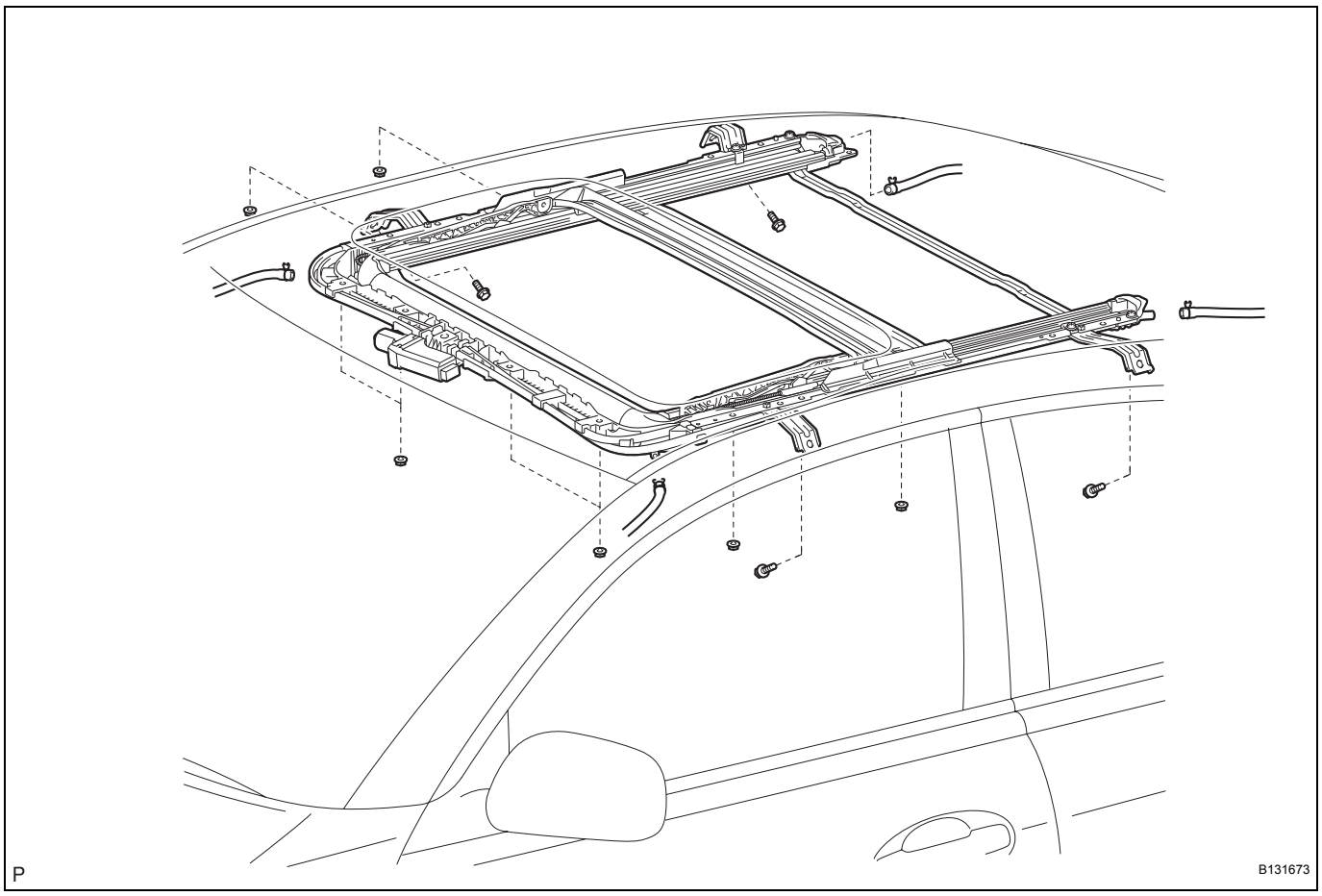

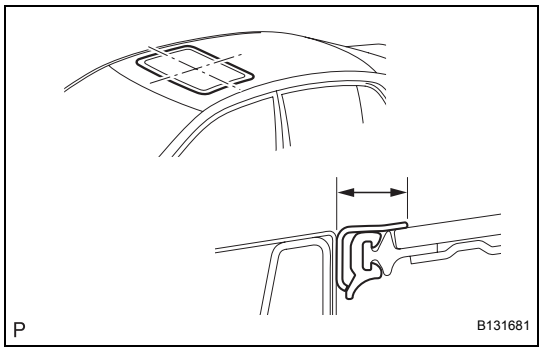

5. ADJUST SLIDING ROOF GLASS SUB-ASSEMBLY

(a) Check for clearance between the roof glass and roof panel. Using a torx wrench (T25), loosen the 4 torx screws and adjust the sliding roof panel position.
Difference:
0 +- 1.4 mm (0 +- 0.055 in.)
NOTICE:
The difference should be even all around.

6. INSTALL SLIDING ROOF GLASS SUB-ASSEMBLY

(a) Using a torx wrench (T25), tighten 4 torx screws.
Torque: 4.5 N*m (46 kgf*cm, 40 in.*lbf)

7. CHECK FOR WATER LEAKS

(a) No water should leak after adjusting the sliding roof.
(b) If a leak is found, readjust the sliding roof.

8. INITIALIZATION OF SLIDING ROOF MOTOR

(a) Initialization of sliding roof motor (See page RF-5).

RF

SLIDING ROOF SWITCH ASSEMBLY

INSPECTION

1. INSPECT SLIDE ROOF MOTOR SWITCH

(a) Remove the slide roof motor switch.

(b) Measure the resistance of the switch when operating the switch.

Resistance

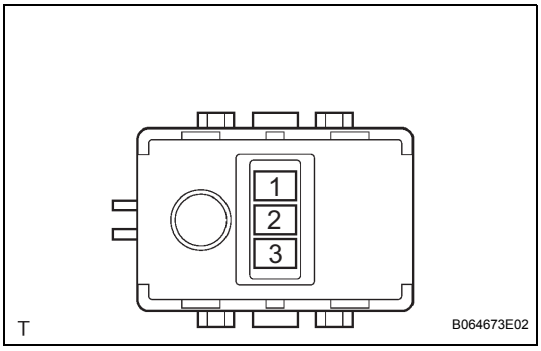

Tester Connection	Switch Condition	Specified Condition
1 - 3	TILT UP is pressed	Below 100 Ω
2 - 3	SLIDE OPEN is pressed	Below 100 Ω
1 - 3	OFF	1 MΩ or higher
2 - 3	OFF	1 MΩ or higher

If the result is not as specified, replace the switch.

AIRBAG SYSTEM

PRECAUTION

CAUTION:

- **The vehicle is equipped with a Supplemental Restraint System (SRS). It consists of a driver airbag, front passenger airbag, driver side knee airbag, front seat side airbag and curtain shield airbag. Failure to carry out service operations in the correct sequence could cause the SRS to unexpectedly deploy during servicing, possibly leading to a serious accident. Further, if a mistake is made in servicing the SRS, it is possible that the SRS may fail to operate when required. Before performing servicing (including removal or installation of parts, inspection or replacement), be sure to read the following items carefully, then follow the correct procedures indicated in the repair manual.**
- **Wait at least 90 seconds after the ignition switch is turned off and the negative (-) terminal cable is disconnected from the battery before starting the operation.**
  (The SRS is equipped with a backup power source, so that if work is started within 90 seconds after disconnecting the negative (-) terminal cable of the battery, the SRS may be deployed.)
- **Do not expose the steering pad, front passenger airbag assembly, driver side knee airbag assembly, center airbag sensor assembly, front airbag sensor, front side seat airbag assembly, side airbag sensor, curtain shield airbag assembly, rear airbag sensor, seat position airbag sensor or occupant classification ECU directly to hot air or flames.**
- **Be sure to perform the initialization of the occupant classification ECU if any of the following conditions occur (See page RS-206). If the initialization is not performed, the SRS may not operate properly.**
  - **The occupant classification ECU is replaced.**
  - **Accessories (seatback tray, seat cover, etc.) are installed to the vehicle.**
  - **The passenger seat is removed from the vehicle, and then reinstalled or replaced.**
  - **The passenger airbag ON/OFF indicator ("OFF") comes on when the passenger seat is not occupied.**
  - **The vehicle is brought to the workshop for repair due to an accident or collision.**

NOTICE:

- **Malfunction symptoms of the SRS are difficult to confirm, so DTCs are the most important source of information when troubleshooting. When troubleshooting the SRS, always inspect DTCs before disconnecting the battery.**

- **Even in the case of a minor collision when the SRS does not deploy, the steering pad, front passenger airbag assembly, driver side knee airbag assembly, center airbag sensor assembly, front airbag sensor, front side seat airbag assembly, side airbag sensor, curtain shield airbag assembly, rear airbag sensor, seat position airbag sensor and occupant classification ECU should be inspected.**
- **Before repair work, remove the airbag sensor if any kind of shock is likely to occur to the airbag sensor during the repair.**
- **Never use SRS parts from another vehicle. When replacing parts, replace them with new ones.**
- **Never disassemble or repair any of the following parts in order to reuse them. If any of these parts have been dropped, or a defect is found (e.g. cracks, dents or any other defects) in any of the housings, brackets or connectors, then replace the part with a new one.**
  - **Steering Pad**
  - **Front Passenger Airbag Assembly**
  - **Driver Side Knee Airbag Assembly**
  - **Front Side Seat Airbag Assembly**
  - **Curtain Shield Airbag Assembly**
  - **Center Airbag Sensor Assembly**
  - **Front Airbag Sensor**
  - **Side Airbag Sensor**
  - **Rear Airbag Sensor**
  - **Seat Position Airbag Sensor**
  - **Occupant Classification ECU**

NOTICE:

- **Use a volt/ohmmeter with high impedance (10 kΩ/V minimum) for troubleshooting the electrical circuits.**
- **Information labels are attached near the SRS components. Follow the instructions in the caution.**
- **After work on the SRS is completed, perform the SRS warning light check (See page RS-28).**
- **When the negative (-) terminal cable is disconnected from the battery, the memory will be cleared. Because of this, be sure to make a record of the contents memorized in each system before starting work. When work is finished, adjust each system as it was before. Never attempt to avoid erasing vehicle system memories by using a backup power supply from outside the vehicle.**
- **If the vehicle is equipped with a mobile communication system, refer to the precaution in the INTRODUCTION section.**

1. **HANDLING PRECAUTIONS FOR AIRBAG SENSORS**

   HINT:

   In this section, the center airbag sensor assembly, front airbag sensor LH and RH, side airbag sensor LH and RH, rear airbag sensor LH and RH are collectively referred to as the airbag sensors.

(a) Before starting the following operations, wait at least 90 seconds after disconnecting the negative (-) cable of the battery:
  (1) Replacement of the airbag sensors.
  (2) Adjustment of the front/rear doors of the vehicle equipped with the side airbag and curtain shield airbag (fitting adjustment).
(b) When connecting or disconnecting the airbag sensor connectors, ensure that all of the sensors are installed in the vehicle.
(c) Do not use airbag sensors which have been dropped during the operation or transportation.
(d) Do not disassemble the airbag sensors.

2. INSPECTION PROCEDURE FOR VEHICLE INVOLVED IN ACCIDENT

(a) When the airbag has not deployed, confirm the DTC by checking the SRS warning light. If there is any malfunction in the SRS airbag system, perform troubleshooting.
(b) When any of the airbags have deployed, replace the airbag sensor and check the installation condition.

3. EXPRESSIONS OF IGNITION SWITCH

The type of ignition switch used on this model differs according to the specifications of the vehicle.
The expressions listed in the table below are used in this section.

Switch Type		Ignition Switch (position)	Engine Switch (condition)
Expression	Ignition Switch off	LOCK	Off
	Ignition Switch on (IG)	ON	On (IG)
	Ignition Switch on (ACC)	ACC	On (ACC)
	Engine Start	START	Start

4. SRS CONNECTORS

HINT:
SRS connectors are located as shown in the following illustration.

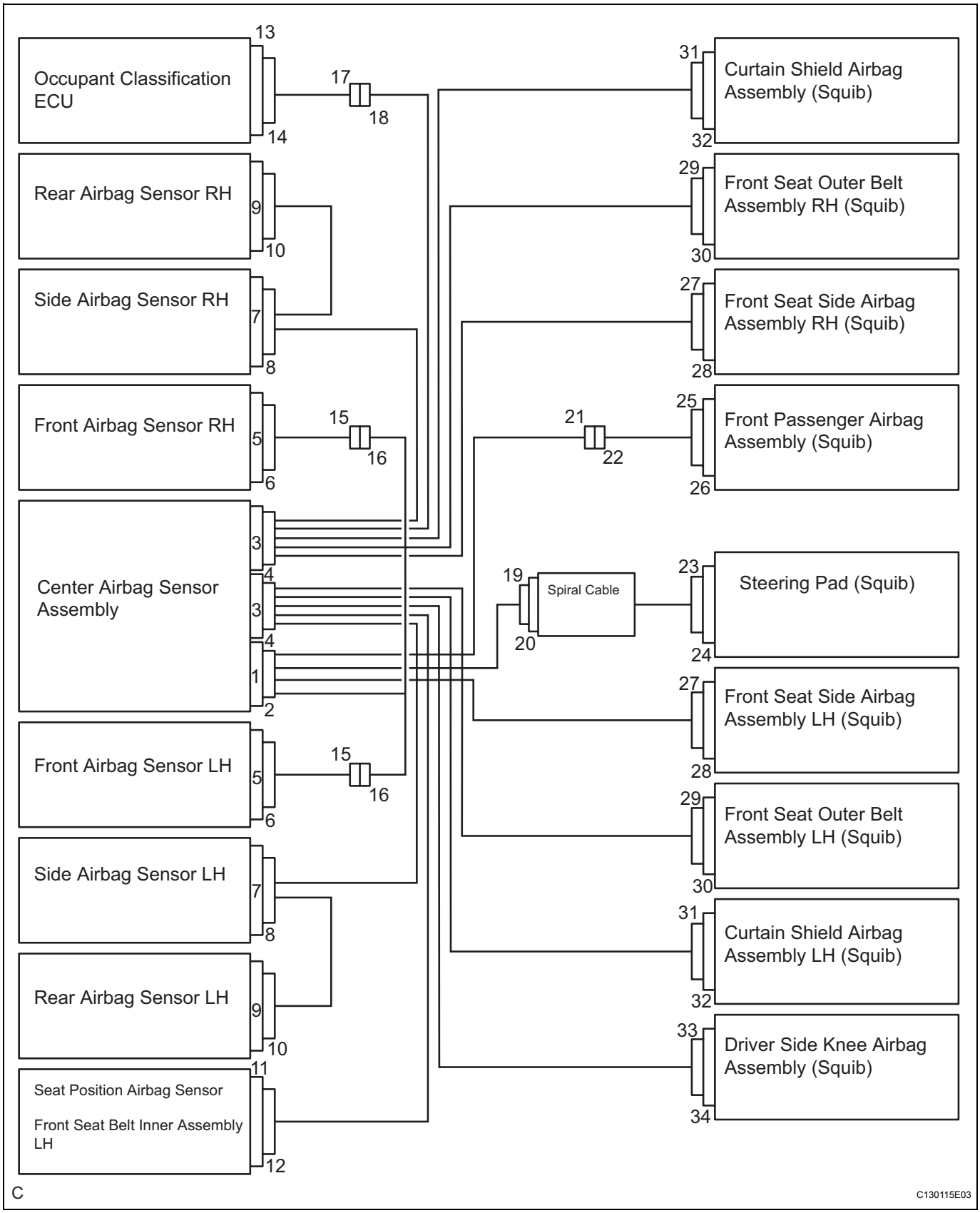

No.	Connector Type	Application
(1)	Terminal Twin-Lock Mechanism	Connectors 6, 8, 10, 12, 15, 16, 17, 18, 19, 21, 22, 27, 28, 32
(2)	Activation Prevention Mechanism	Connectors 20, 22, 24, 26, 28, 30, 32, 34
(3)	Half Connection Prevention Mechanism	Connectors 6, 8, 10, 16, 19, 21, 27, 31

No.	Connector Type	Application
(4)	Connector Position Assurance Mechanism	Connector 6
(5)	Connector Lock Mechanism (1)	Connectors 23, 25, 29, 31, 33
(6)	Connector Lock Mechanism (2)	Connectors 2, 4
(7)	Improper Connection Prevention Lock Mechanism	Connectors 1, 3

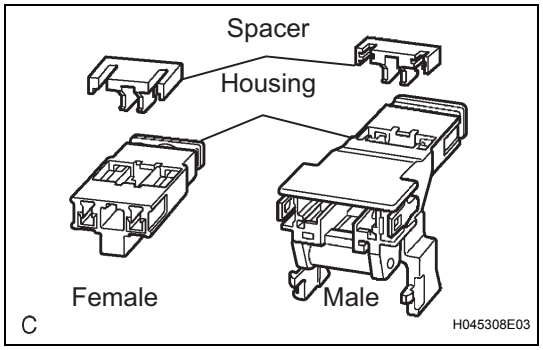

(a) All connectors in the SRS, except the seat position airbag sensor connector and the occupant classification ECU connectors, are colored yellow to distinguish them from other connectors. These connectors have special functions, and are specially designed for the SRS. All SRS connectors use durable gold-plated terminals, and are placed in the locations shown on the previous page to ensure high reliability.

(1) Terminal twin-lock mechanism:
All connectors with a terminal twin-lock mechanism have a two-piece component consisting of a housing and a spacer. This design enables the terminal to be locked securely by two locking devices (the retainer and the lance) to prevent terminals from coming out.

(2) Activation prevention mechanism:

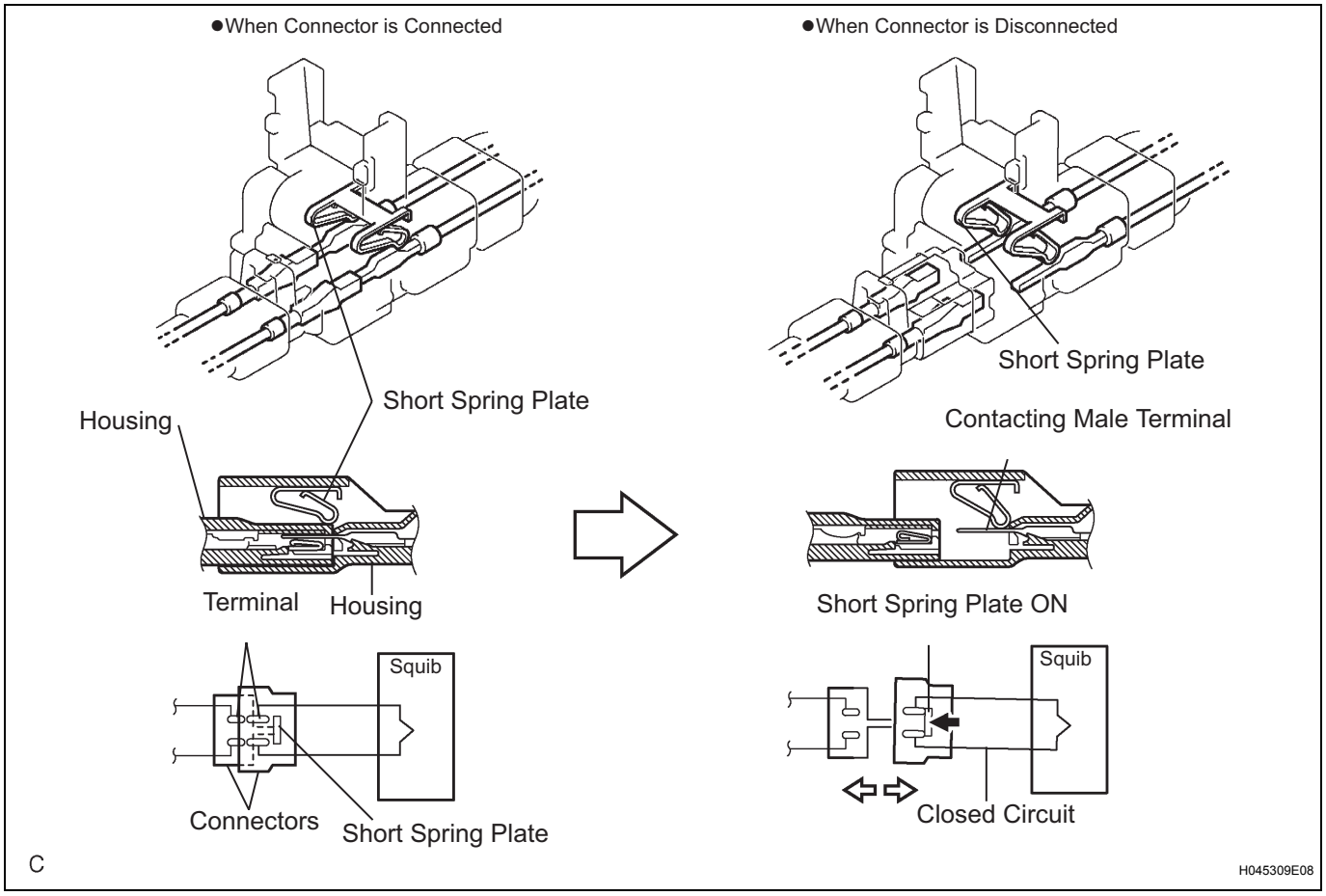

All connectors with an activation prevention mechanism contain a short spring plate. When these connectors are disconnected, the short spring plate creates a short circuit by automatically connecting the positive (+) and negative (-) terminals of the squib.

(3) Half connection prevention mechanism:

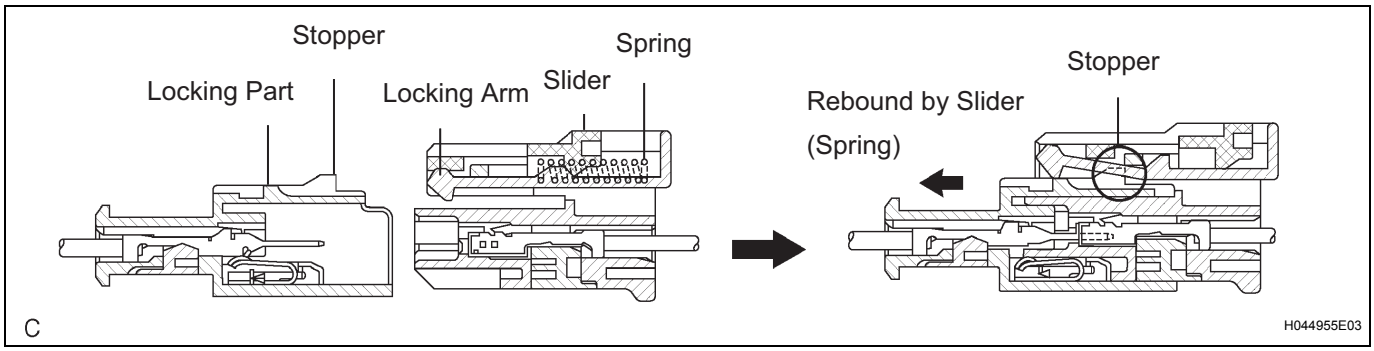

If the connector is not completely connected, the connector is disconnected due to the spring operation so that no continuity exists.

(4) Connector position assurance mechanism:

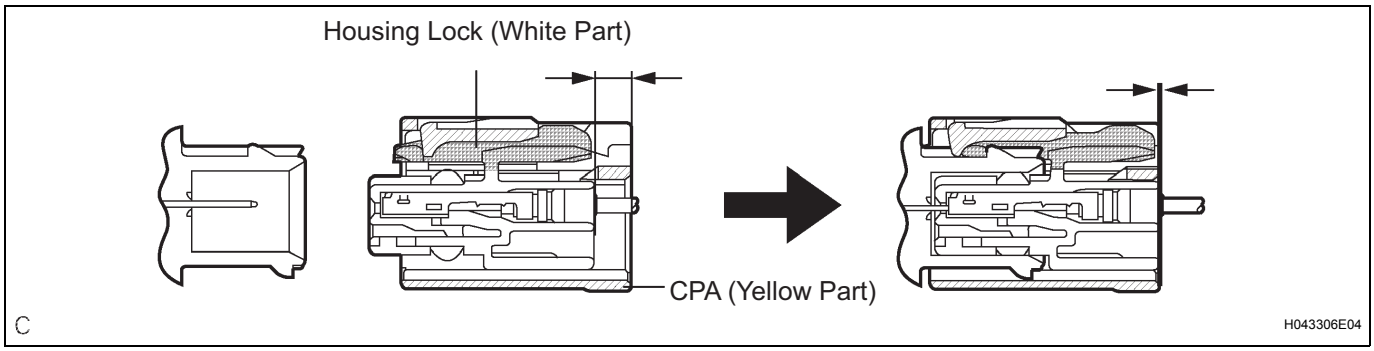

Only when the housing lock (white part) is completely engaged, the CPA (yellow part) slides, which completes the connector engagement.

(5) Connector lock mechanism (1):

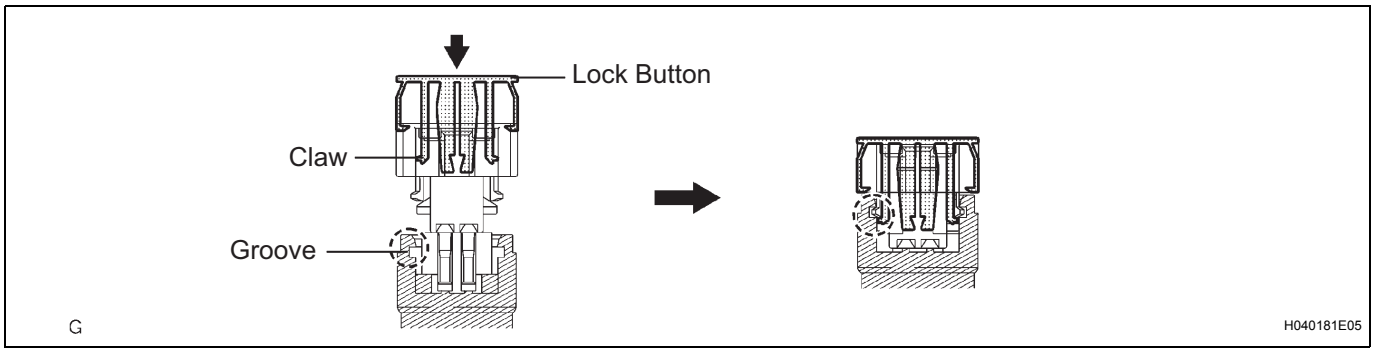

Locking the connector lock button connects the connector securely.

(6) Connector lock mechanism (2):

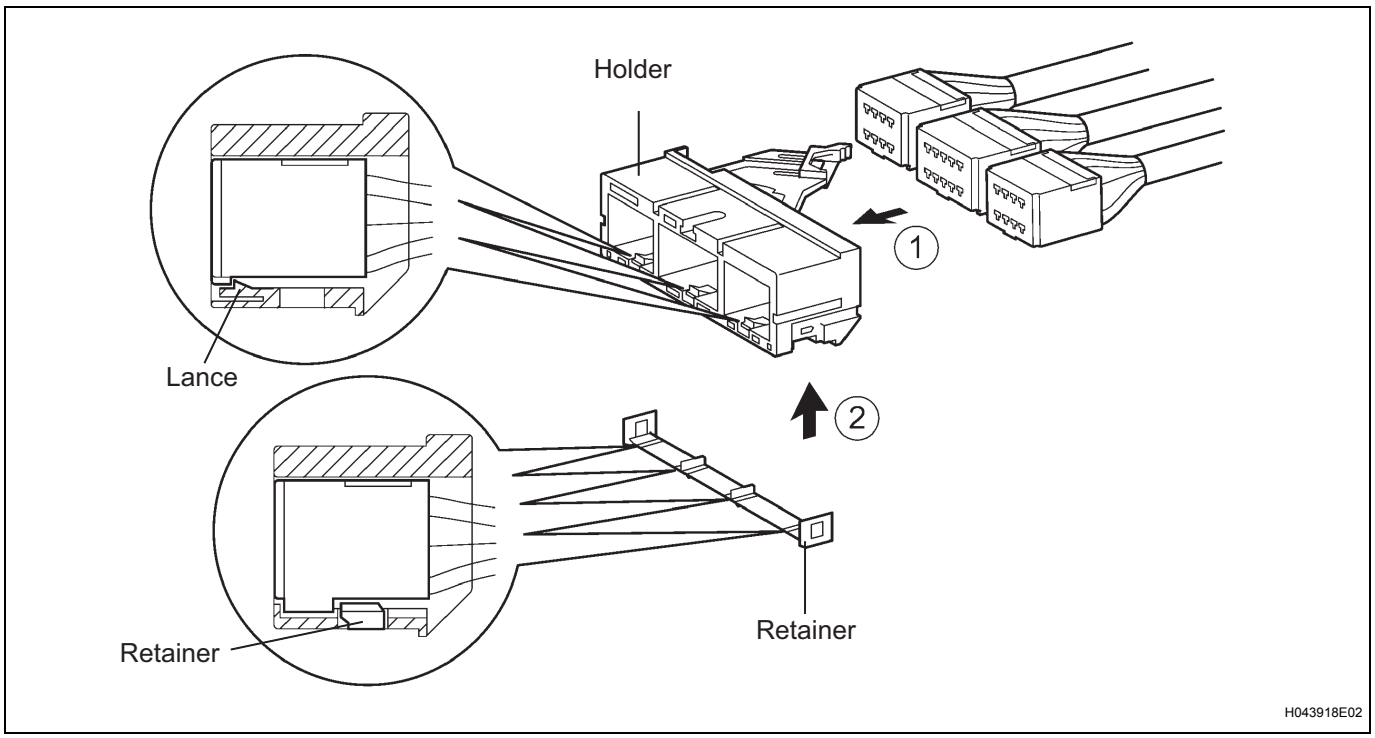

Both the primary lock with holder lances and the secondary lock with retainer prevent the connectors from becoming disconnected.

(7) Improper connection prevention lock mechanism:

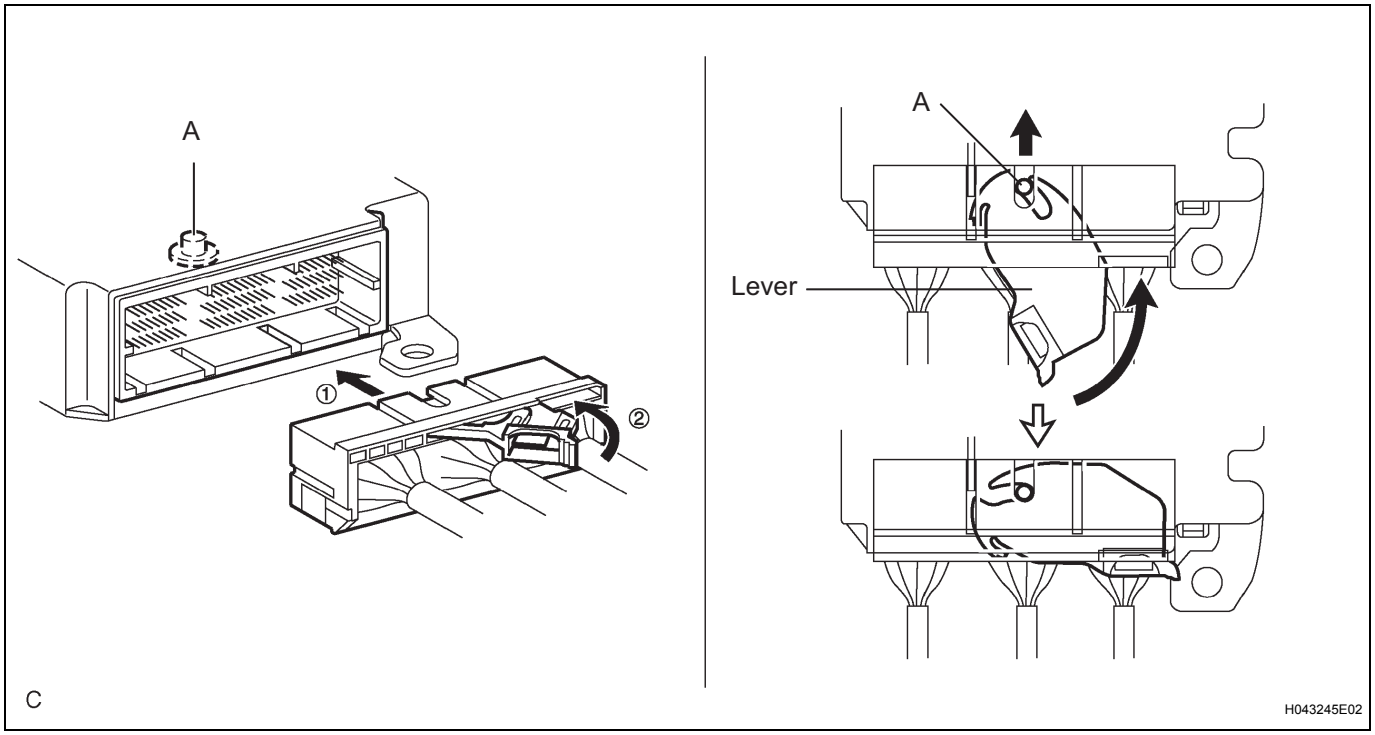

When connecting the holder, the lever is pushed into the end by rotating around the A axis to lock the holder securely.

5. DISCONNECTION OF CONNECTORS FOR STEERING PAD, FRONT PASSENGER AIRBAG ASSEMBLY (SQUIB SIDE), CURTAIN SHIELD AIRBAG ASSEMBLY AND DRIVER SIDE KNEE AIRBAG ASSEMBLY

(a) Release the lock button (yellow part) of the connector using a screwdriver.

(b) Insert the screwdriver tip between the connector and the base, and then raise the connector.

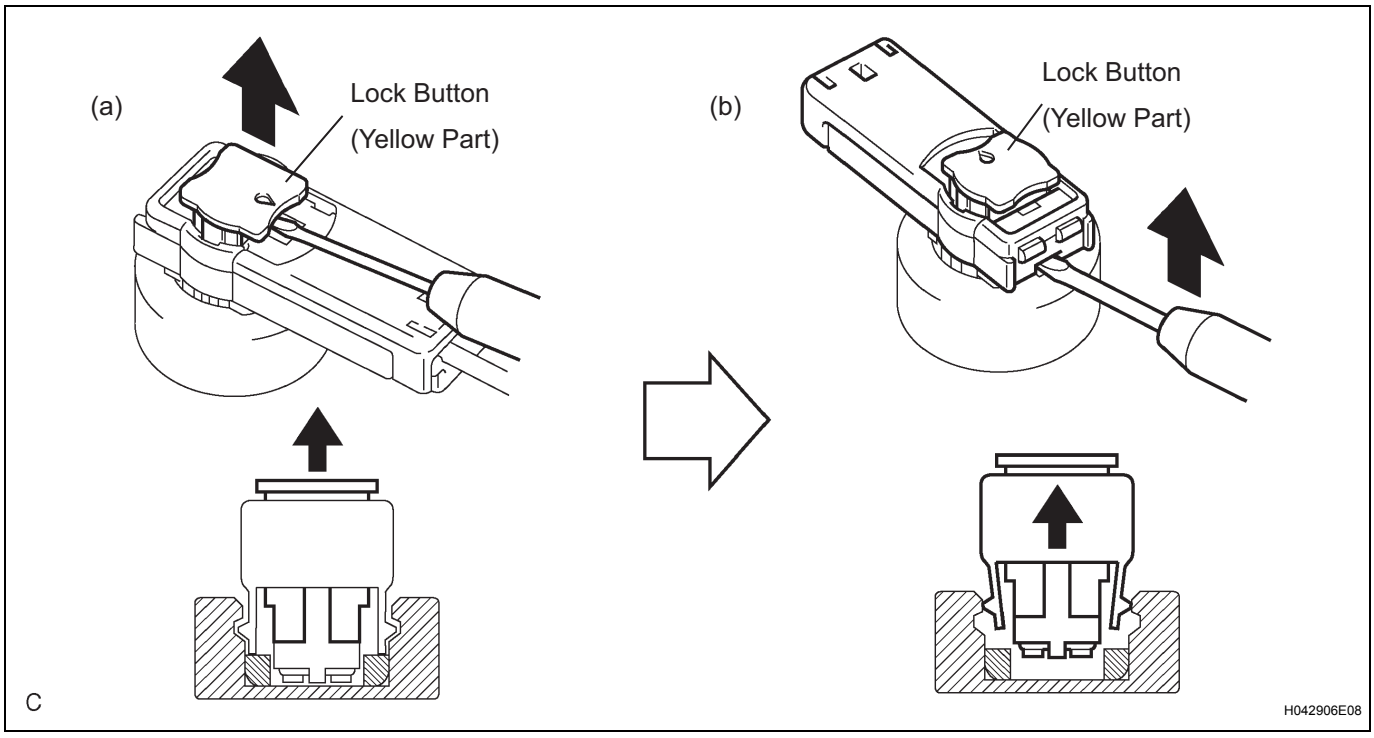

6. CONNECTION OF CONNECTORS FOR STEERING PAD, FRONT PASSENGER AIRBAG ASSEMBLY (SQUIB SIDE), CURTAIN SHIELD AIRBAG ASSEMBLY AND DRIVER SIDE KNEE AIRBAG ASSEMBLY

(a) Connect the connector.

(b) Push down securely on the lock button (yellow part) of the connector. (When locking, a click sound can be heard.)

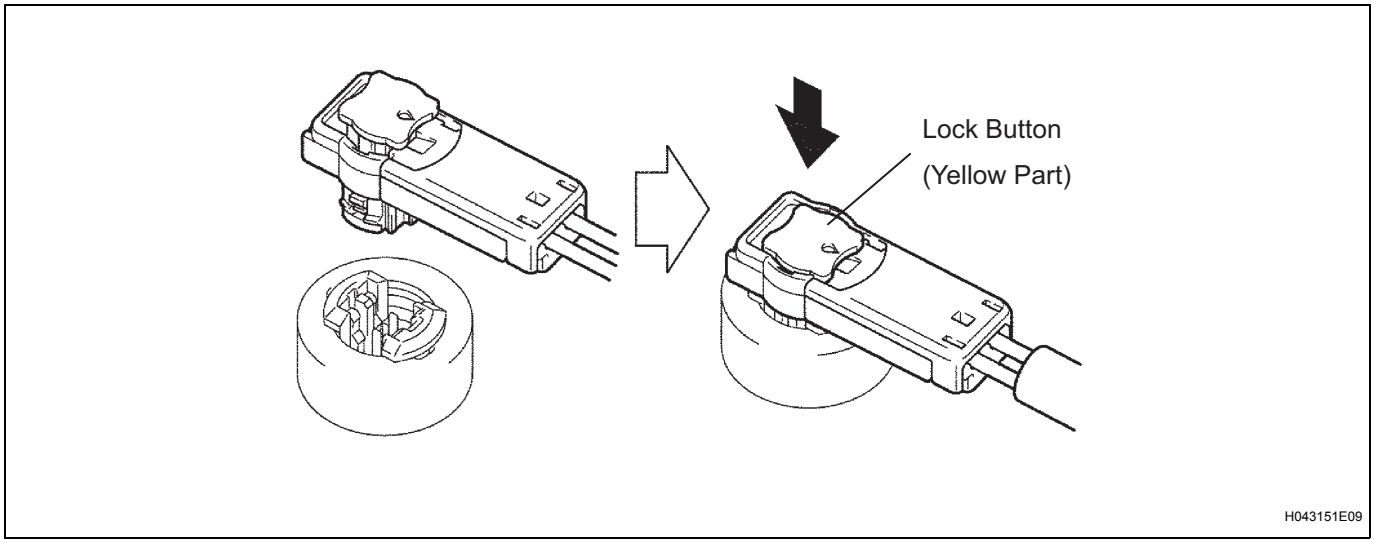

7. DISCONNECTION OF CONNECTOR FOR FRONT PASSENGER AIRBAG ASSEMBLY (INSTRUMENT PANEL WIRE SIDE)

(a) Place a finger on the slider, slide the slider to release the lock, and then disconnect the connector.

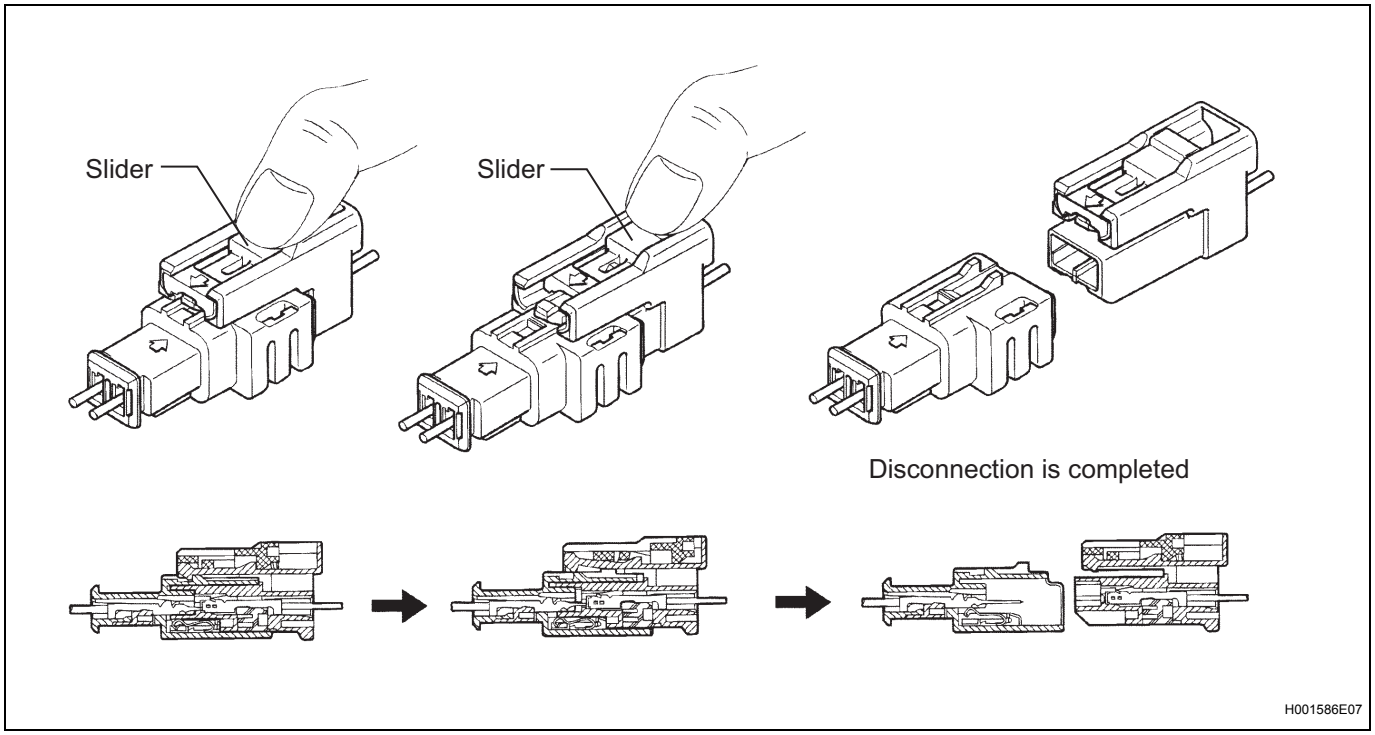

8. CONNECTION OF CONNECTOR FOR FRONT PASSENGER AIRBAG ASSEMBLY (INSTRUMENT PANEL WIRE SIDE)

(a) Connect the connector as shown in the illustration. (When locking, make sure that the slider returns to its original position and a click sound can be heard.)

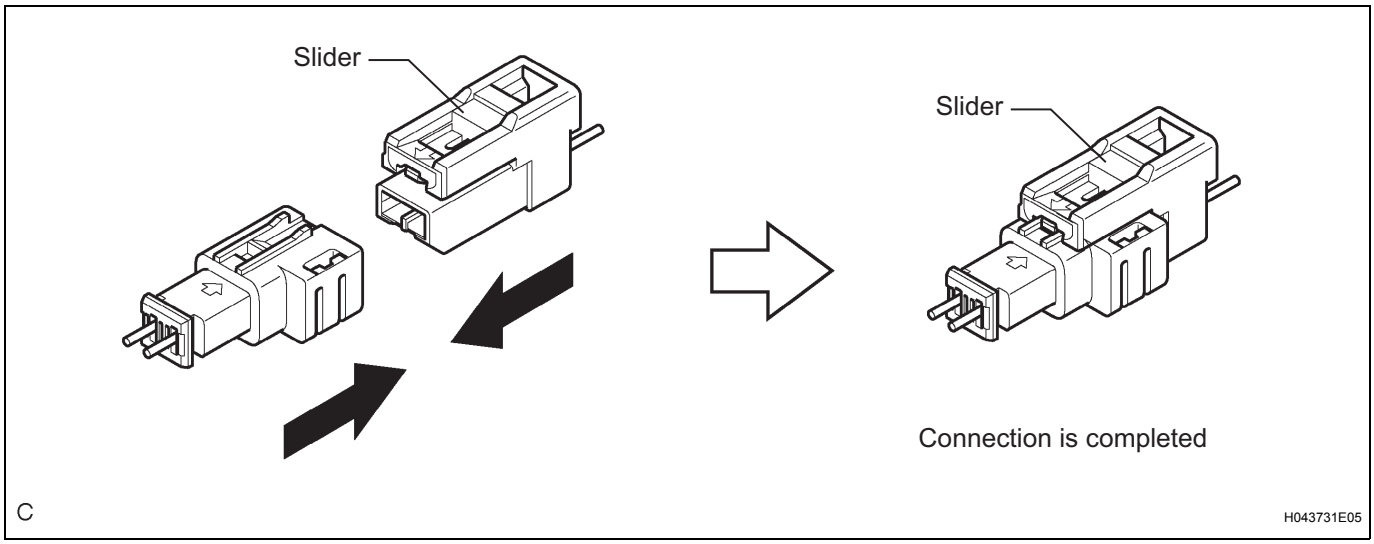

HINT:
When connecting, the slider will slide. Be sure not to touch the slider while connecting, as it may result in an insecure fit.

9. DISCONNECTION OF CONNECTOR FOR FRONT SEAT SIDE AIRBAG ASSEMBLY

(a) Place a finger on the slider, slide the slider to release the lock, and then disconnect the connector.

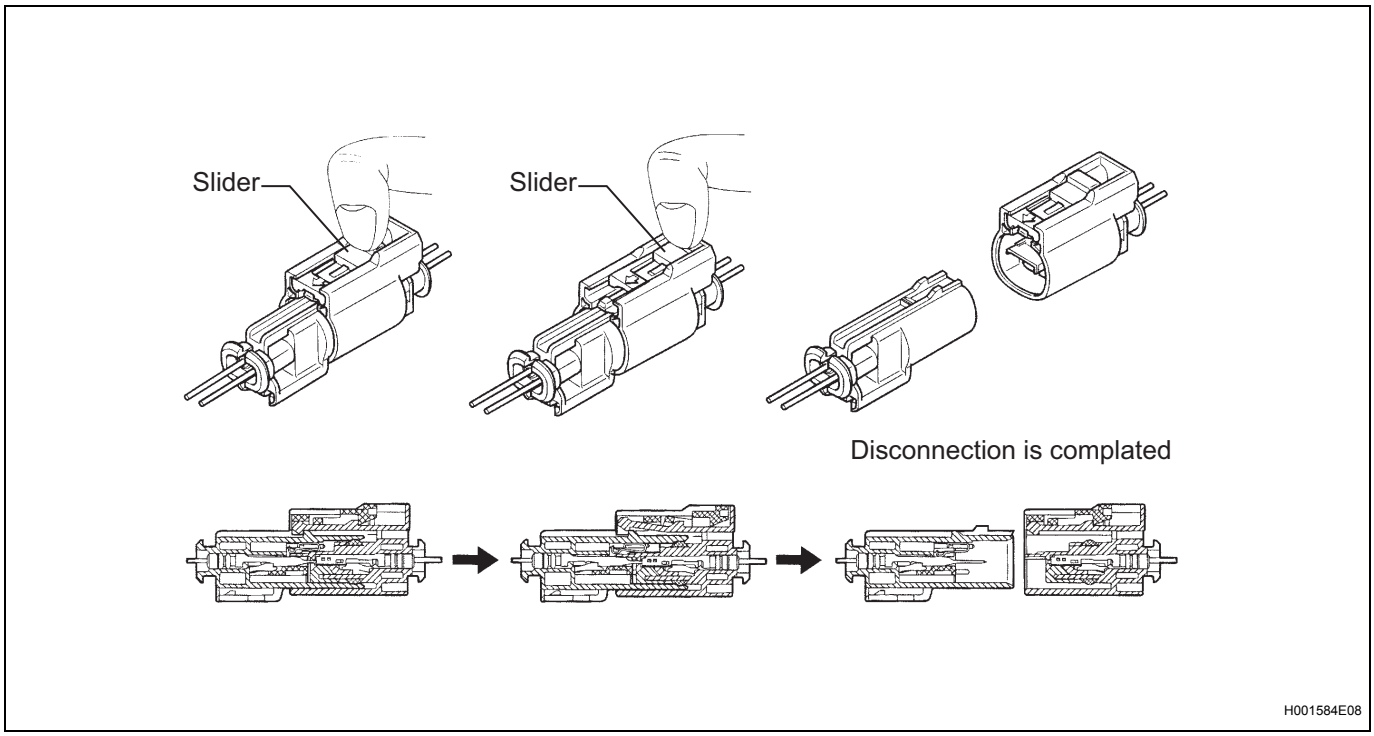

10. CONNECTION OF CONNECTOR FOR FRONT SEAT SIDE AIRBAG ASSEMBLY

(a) Connect the connector as shown in the illustration. (When locking, make sure that the slider returns to its original position and a click sound can be heard.)
HINT:
When connecting, the slider will slide. Be sure not to touch the slider while connecting, as it may result in an insecure fit.

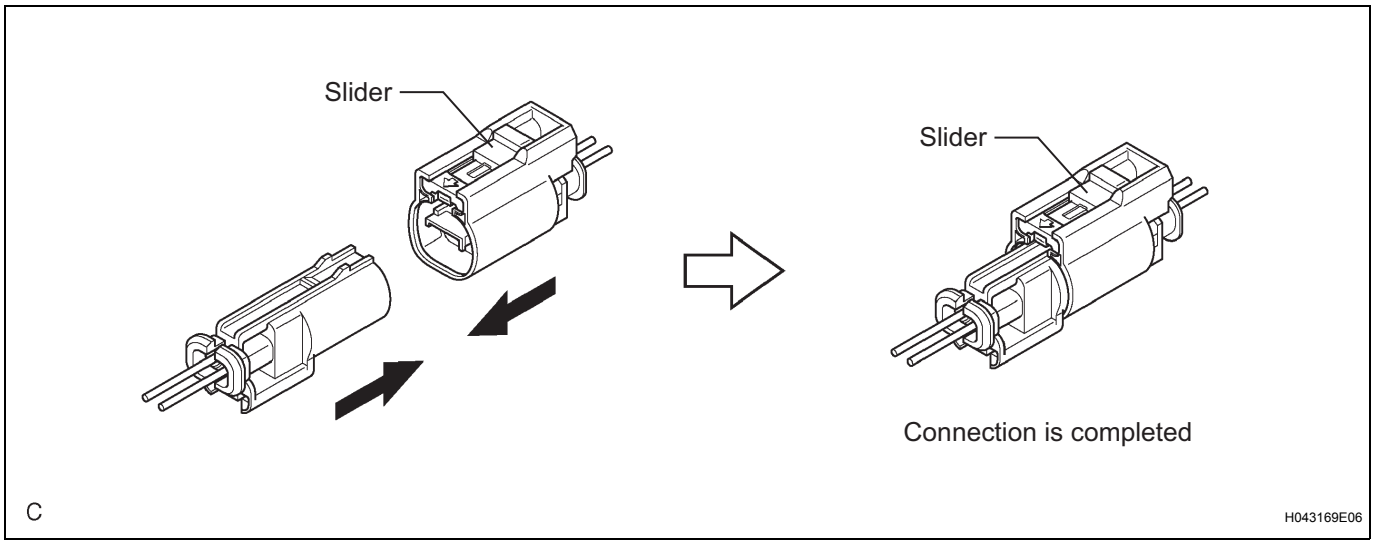

11. DISCONNECTION OF CONNECTOR FOR CENTER AIRBAG SENSOR ASSEMBLY

(a) Pull the lever by pushing part A as shown in the illustration and disconnect the holder (with connectors).

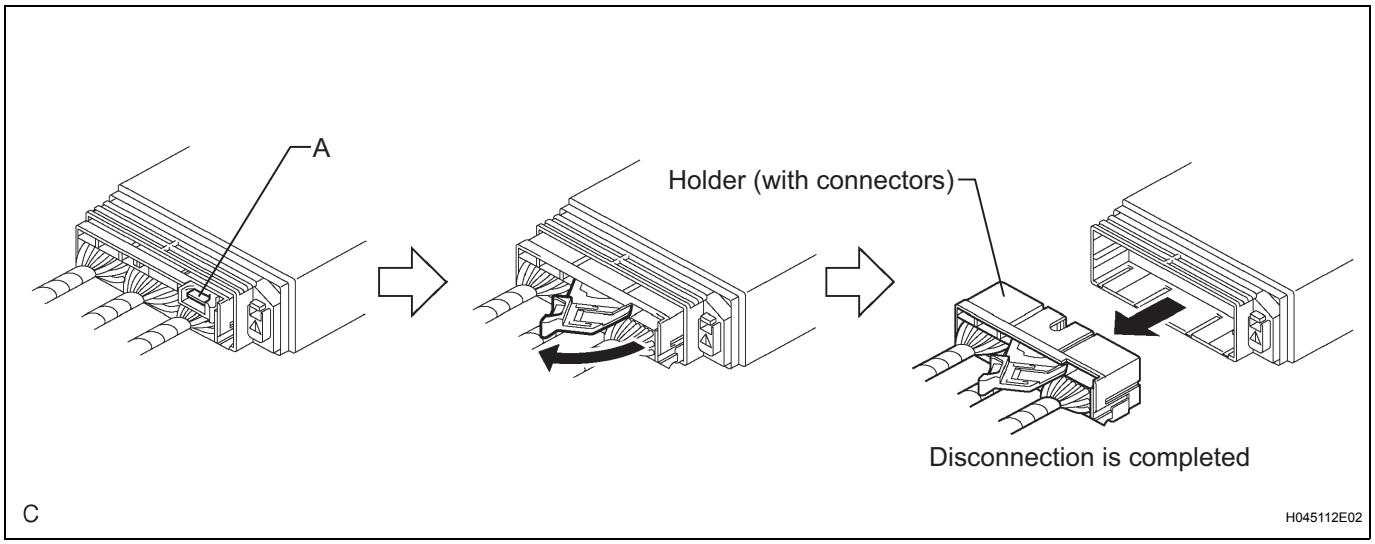

HINT:
Perform the following procedures when replacing the holder.

(b) Remove the holder.
(1) Using a screwdriver, unlock the retainer.

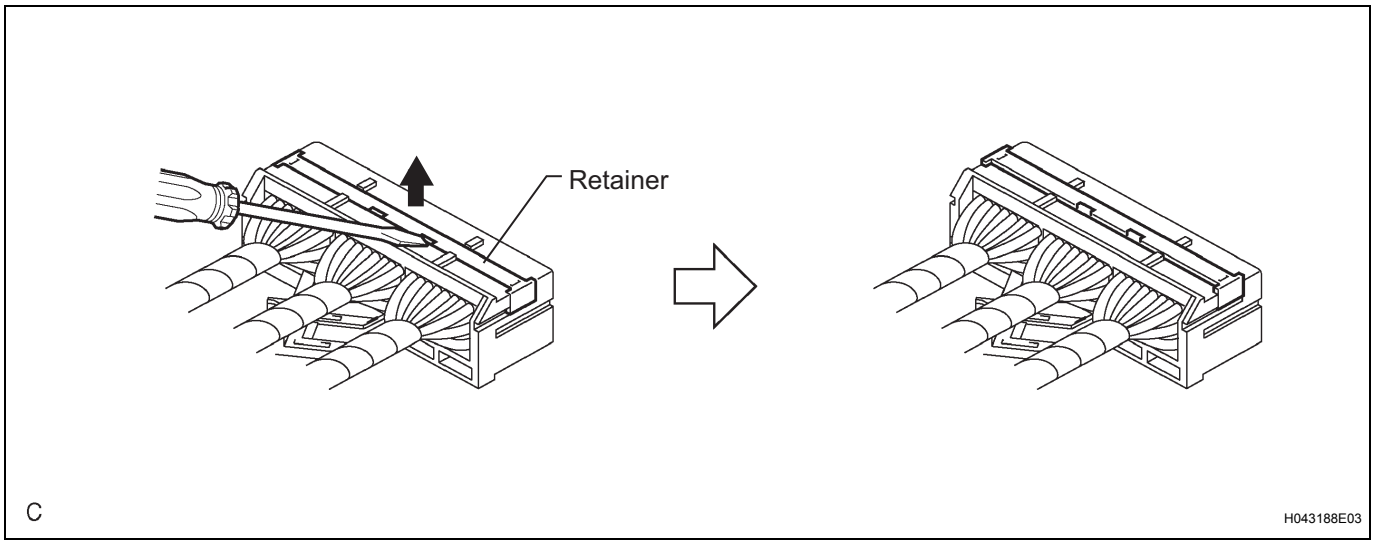

(2) Release the fitting lance and remove the holder.

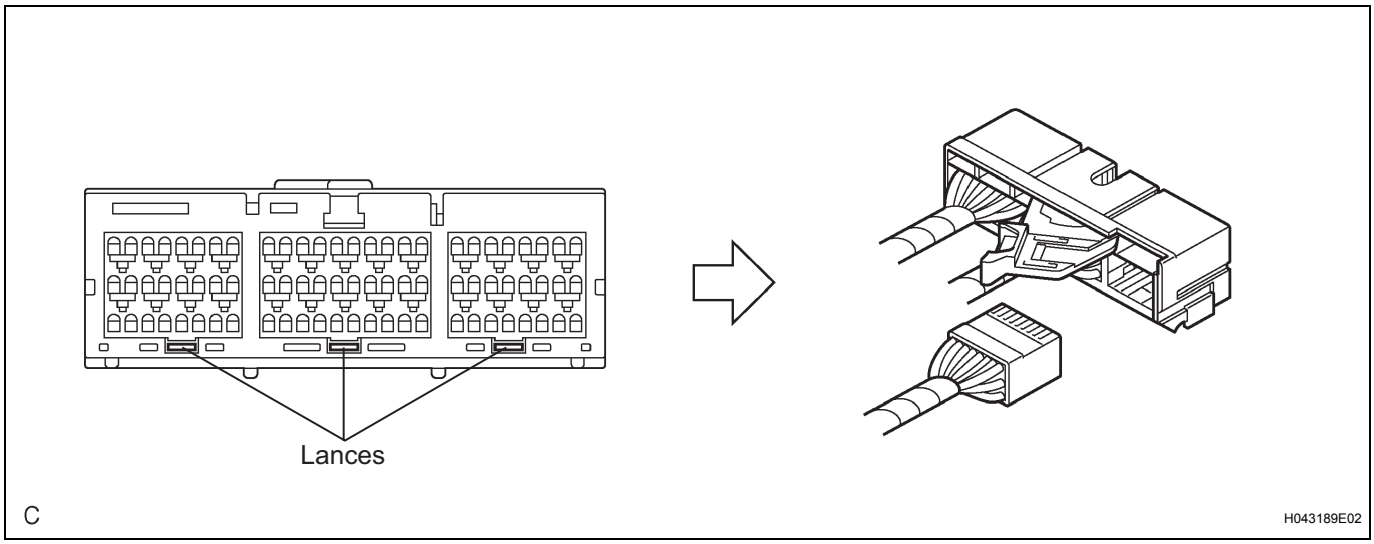

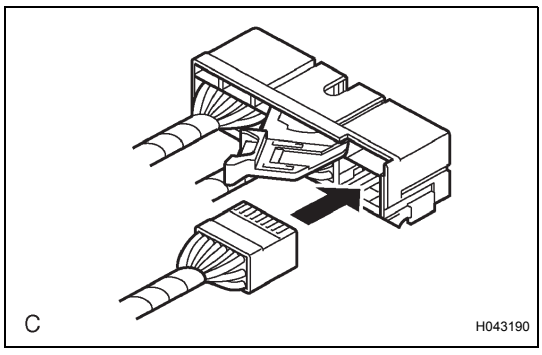

(c) Install the holder.
(1) Install the connectors to the holder. (When locking, a click sound can be heard.)
HINT:
The retainer is locked when the holder is connected.

12. CONNECTION OF CONNECTOR FOR CENTER AIRBAG SENSOR ASSEMBLY

(a) Firmly insert the holder (with connectors) into the airbag sensor assembly center until it cannot be pushed any further.

(b) Push the lever to connect the holder (with connectors). (When locking, a click sound can be heard.)
HINT:
The holder slides in to the center airbag sensor assembly when it is being connected. Be sure not to hold the holder while connecting, as it may result in an insecure fit.

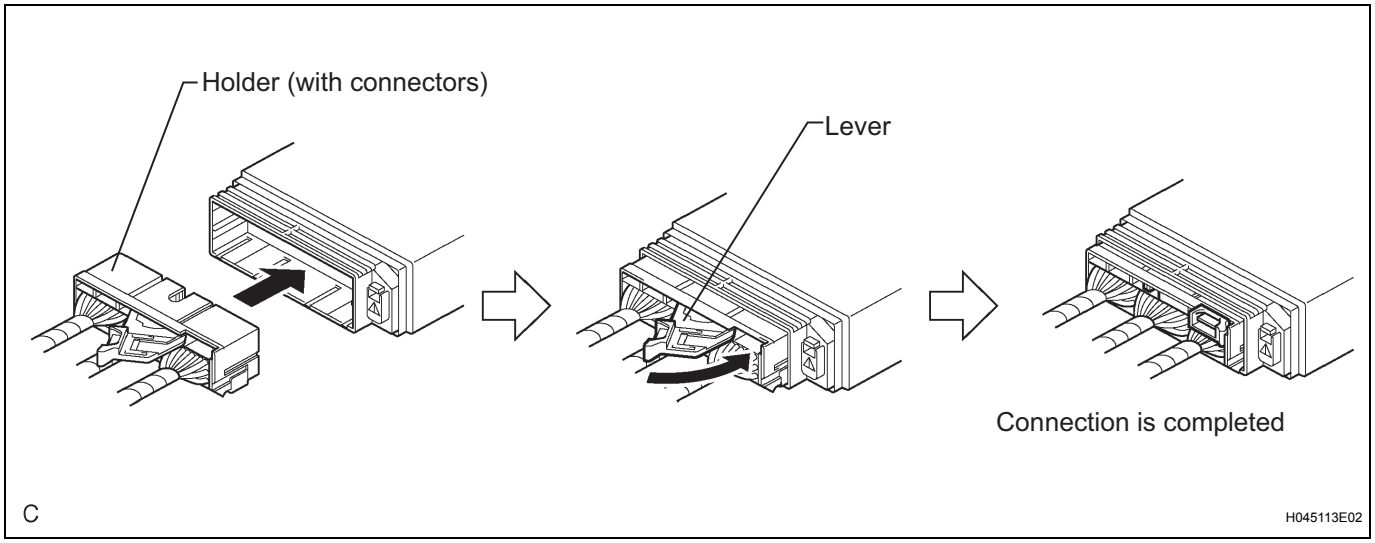

13. DISCONNECTION OF CONNECTOR FOR FRONT AIRBAG SENSOR

(a) Push down the housing lock (white part) and slide the CPA (yellow part). (At this time, the connector cannot be disconnected yet).

(b) Push down the housing lock (white part) again and disconnect the connector.

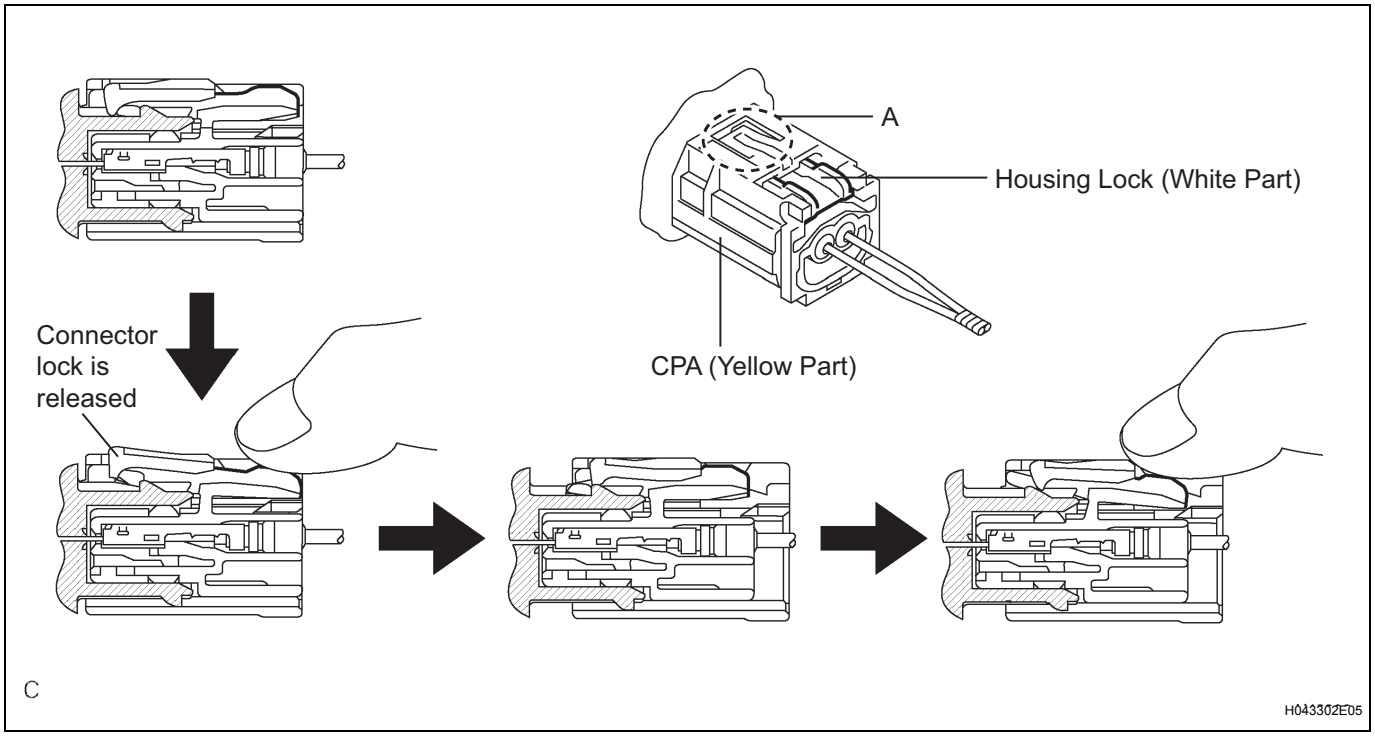

HINT:
Do not push down the A part shown in the illustration when disconnecting.

(c) After disconnecting the connector, check that the position of the housing lock (white part) is as shown in the illustration.

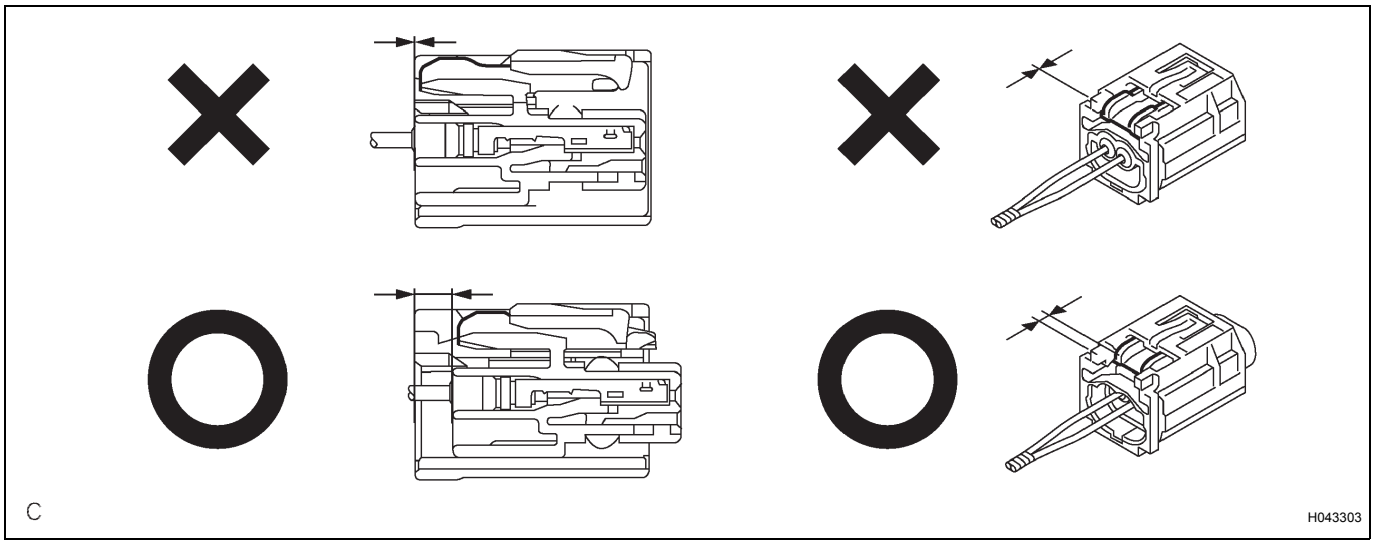

14. CONNECTION OF CONNECTOR FOR FRONT AIRBAG SENSOR

(a) Before connecting the connectors, check that the position of the housing lock (white part) is as shown in the illustration.

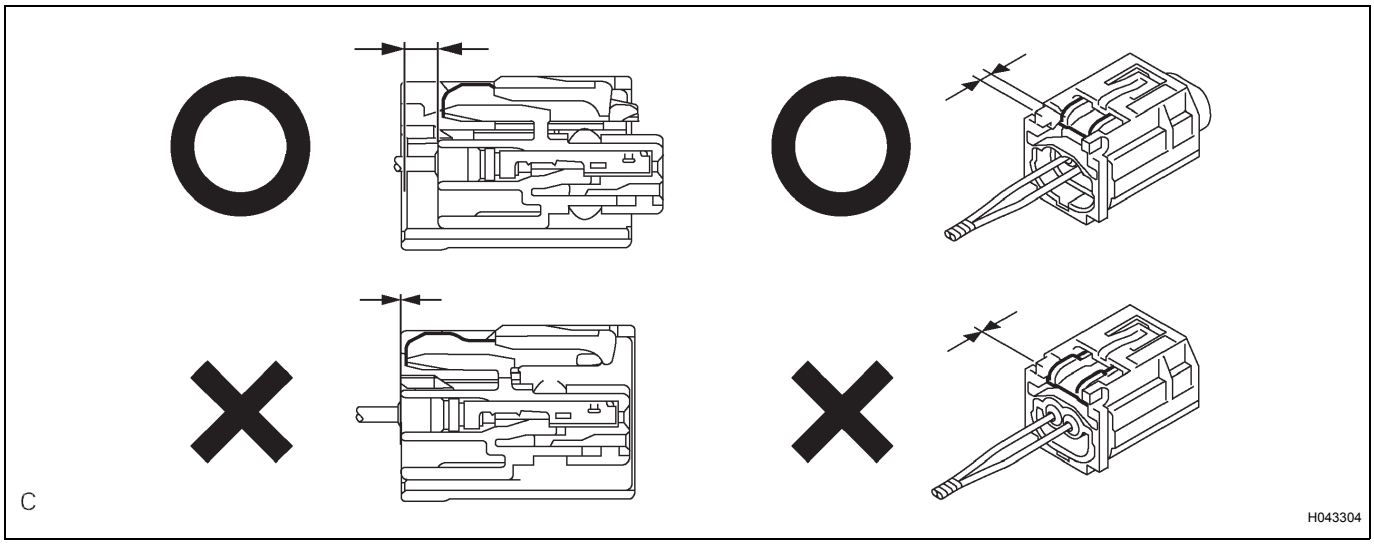

(b) Be sure to engage the connectors until they are locked. (When locking, make sure that a click sound can be heard.)
HINT:
When connecting them, the housing lock (white part) slides. Be sure not to hold the housing lock (white part) and A part, as it may result in an insecure fit.

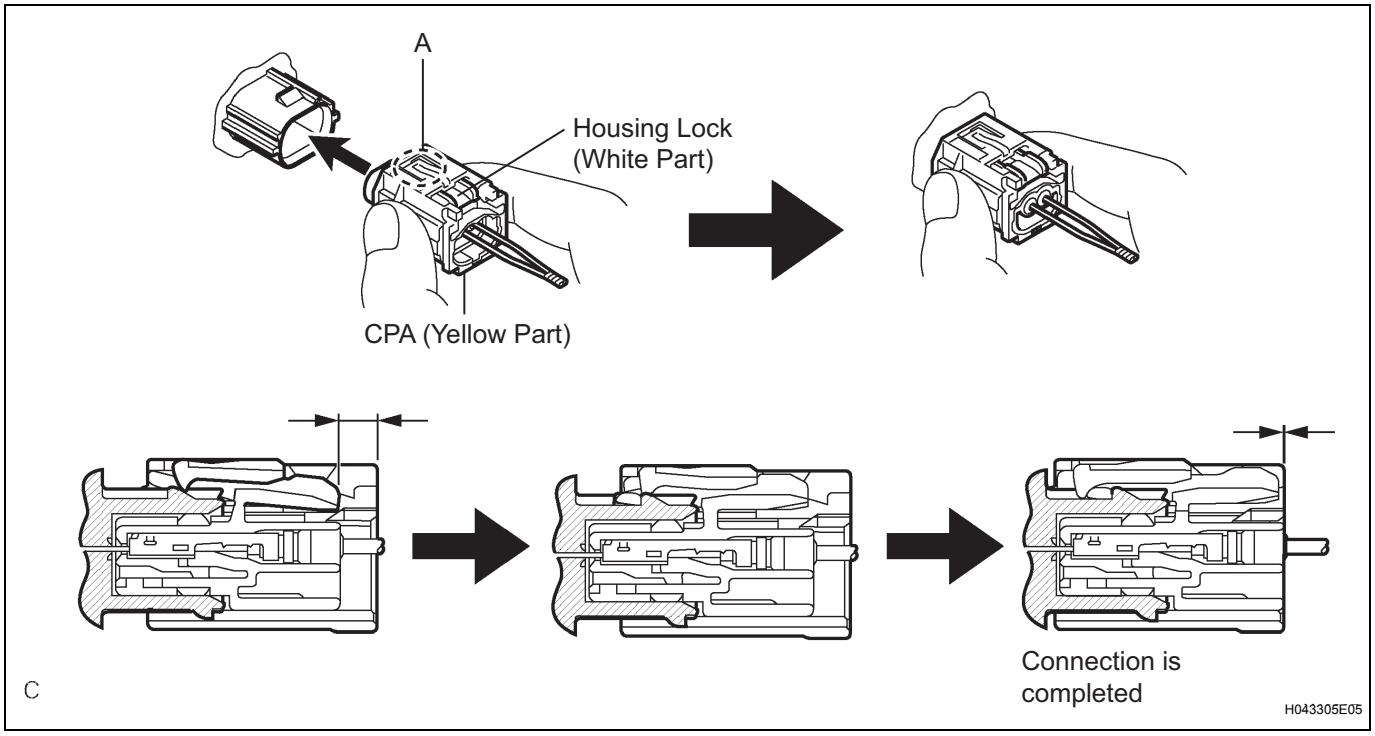

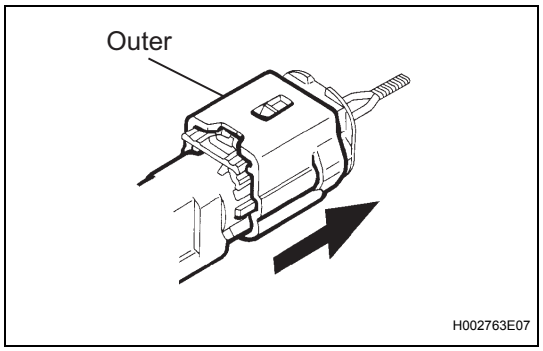

15. DISCONNECTION OF CONNECTORS FOR SIDE AIRBAG SENSOR AND REAR AIRBAG SENSOR

(a) While holding both the sides of the outer connector locking sleeve, slide the outer in the direction shown by the arrow.

(b) When the connector lock is released, the connectors are disconnected.
HINT:
Be sure to hold both outer flank sides. Holding the top and bottom will make disconnection difficult.

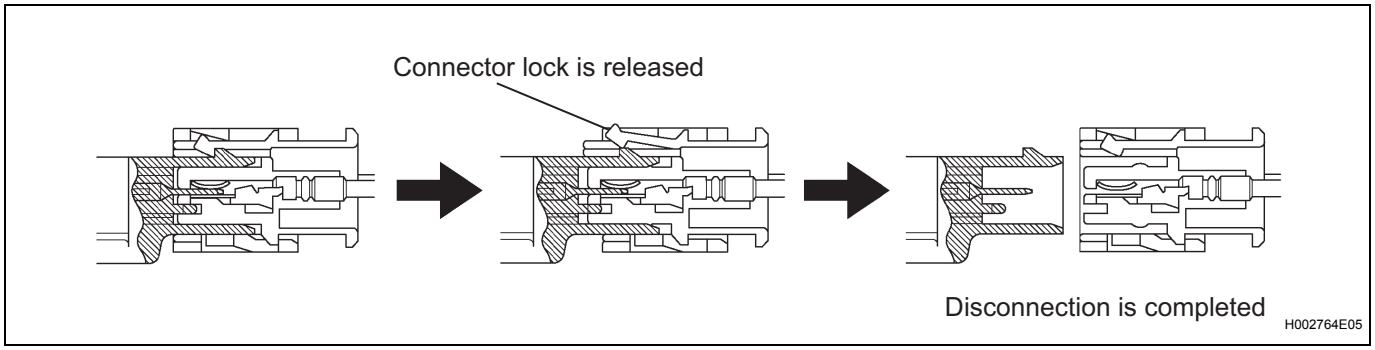

16. CONNECTION OF CONNECTORS FOR SIDE AIRBAG SENSOR AND REAR AIRBAG SENSOR

(a) Connect the connector as shown in the illustration. (When locking, make sure that the outer returns to its original position and a click sound can be heard.)
HINT:
When connecting, the outer will slide. Be sure not to hold the outer while connecting, as it may result in an insecure fit.

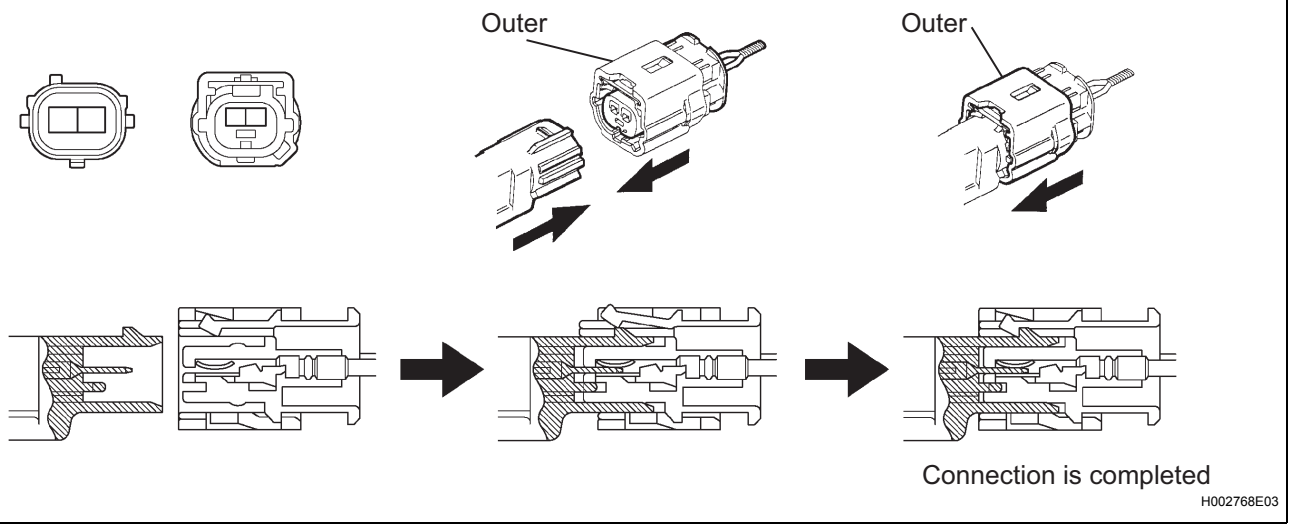
Outer
Outer
Connection is completed
H002768E03

PARTS LOCATION

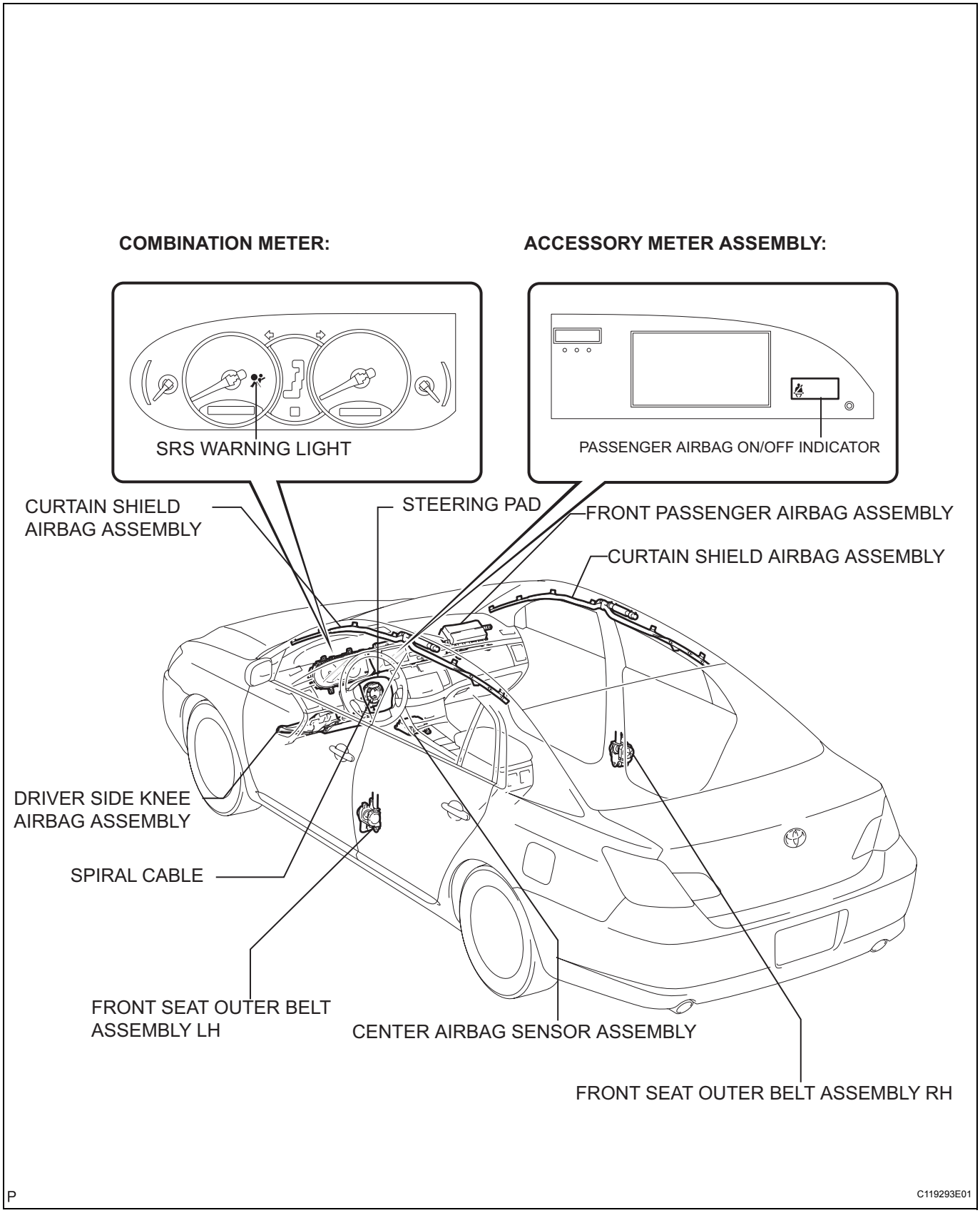

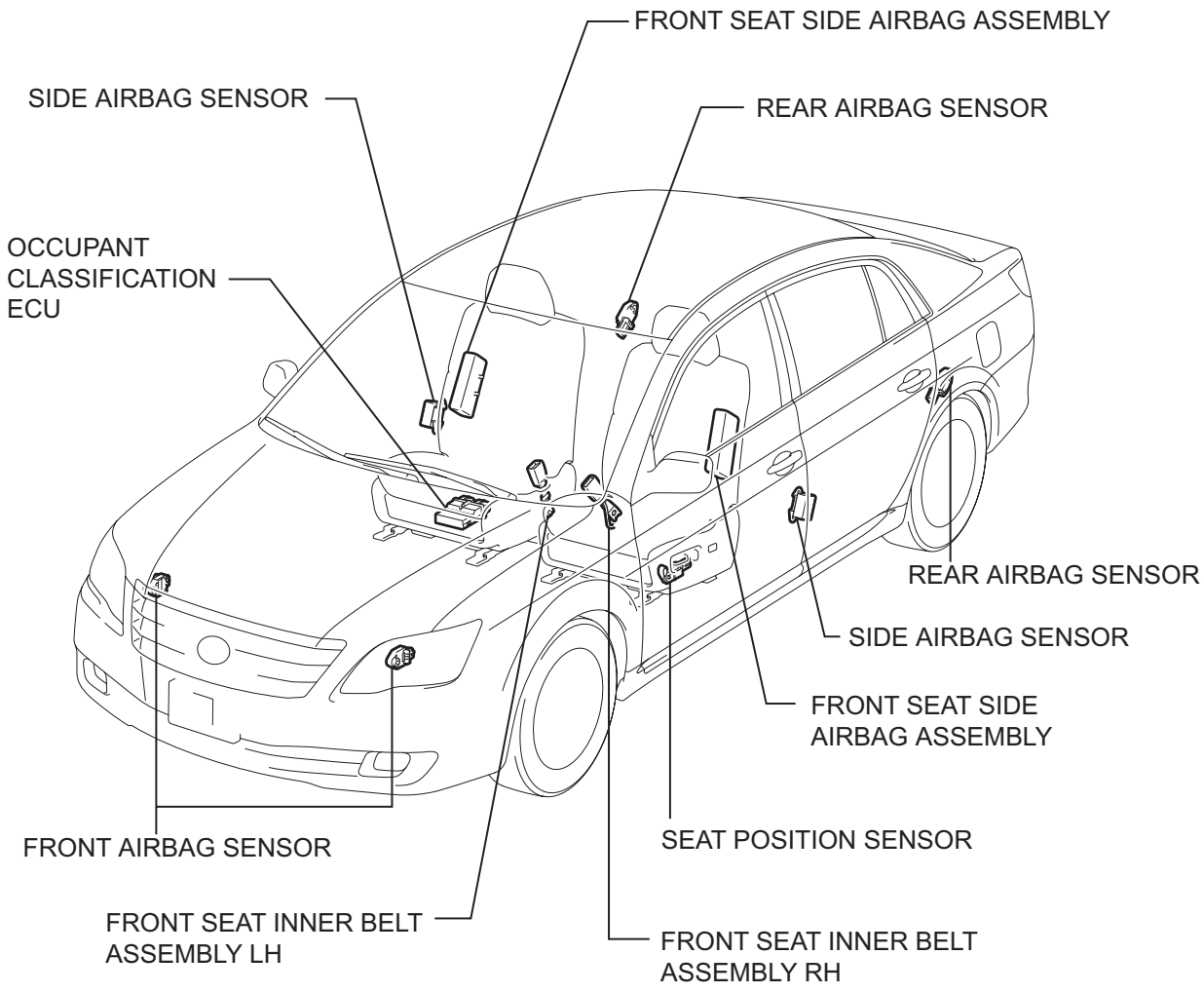
FRONT SEAT SIDE AIRBAG ASSEMBLY
SIDE AIRBAG SENSOR
REAR AIRBAG SENSOR
OCCUPANT CLASSIFICATION ECU
REAR AIRBAG SENSOR
SIDE AIRBAG SENSOR
FRONT SEAT SIDE AIRBAG ASSEMBLY
FRONT AIRBAG SENSOR
SEAT POSITION SENSOR
FRONT SEAT INNER BELT ASSEMBLY LH
FRONT SEAT INNER BELT ASSEMBLY RH

C119292E01

SYSTEM DIAGRAM

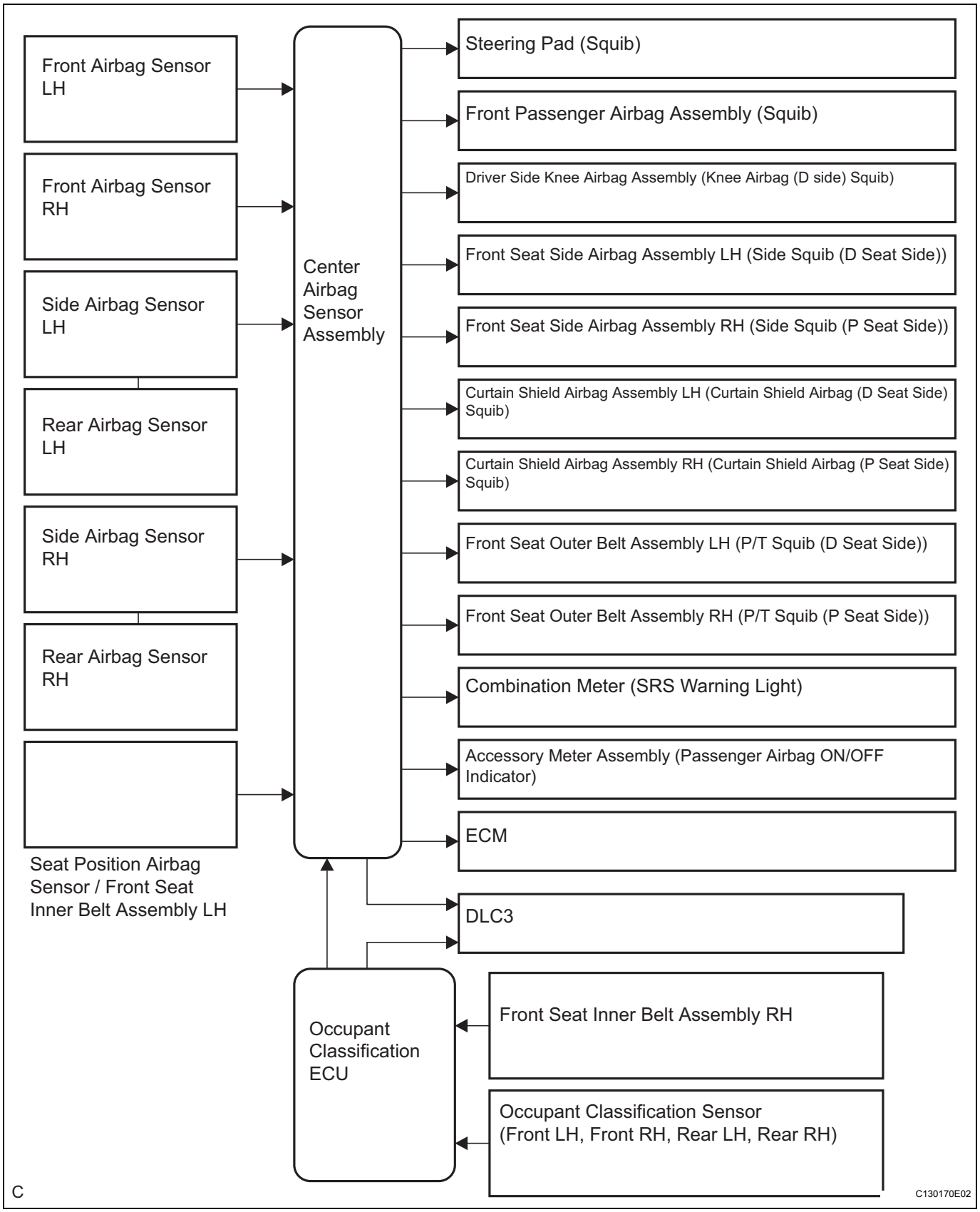

RS

SYSTEM DESCRIPTION

1. GENERAL

(a) In conjunction with impact absorbing structure for a frontal collision, the SRS (Supplemental Restraint System) driver, front passenger and knee airbags were designed to supplement seat belts in the event of a frontal collision in order to help reduce shock to the head and chest of the driver and front passenger. This system is a 3-sensor type airbag system to detect the impact during a frontal collision using the airbag sensor assembly center and front airbag sensors. It also operates the airbag system and seat belt pretensioner.

(b) In order to detect the extent of the collision during the initial stages of the collision in further detail, the front airbag sensors have been changed from mechanical type to electrical type deceleration sensors. Accordingly, the deployment of the driver and front passenger airbags is controlled in two stages according to the severity of the impact.

(c) In conjunction with impact absorbing structure for a side collision, the front seat and curtain shield airbags were designed to help reduce shock to the driver, front passenger, and rear outer passengers in the event of a side collision.

(d) The curtain shield airbag system that helps reduce shock to the front and rear seat occupants with a single curtain shield airbag has been adopted. In conjunction with this system, the side airbag sensor assemblies have been installed at the bottom of the center pillars and the airbag sensor rear has been installed at the bottom of the rear pillars respectively.

(e) In this system, a front side collision is detected by the side airbag sensor assembly and airbag sensor assembly center in order to simultaneously deploy the side airbags and curtain shield airbags. A rear side collision is detected by the airbag sensor rear and the airbag sensor assembly center in order to deploy only the curtain shield airbag.

2. CONSTRUCTION AND OPERATION

(a) FRONT AIRBAG SENSOR

(1) The front airbag sensor assemblies are installed on the right and left front side members respectively.

(2) The front airbag sensor consists of the deceleration sensor.

(3) The deceleration sensor is built into the front airbag sensor, and the distortion that is created in the sensor is converted into an electric signal based on the vehicle deceleration rate during a frontal collision. Accordingly, the extent of the initial collision can be detected in detail.

(b) SIDE AIRBAG SENSOR
(1) The side airbag sensor assemblies are installed on the bottom of the right and left center pillars respectively.
(2) The side airbag sensor consists of the deceleration sensor.
(3) The deceleration sensor is built into the side airbag sensor, and the distortion that is created in the sensor is converted into an electric signal based on the vehicle deceleration rate during a front side collision. Accordingly, the extent of the initial collision can be detected in detail.

(c) REAR AIRBAG SENSOR
(1) The rear airbag sensor assemblies are installed on the right and left rear pillars respectively.
(2) The rear airbag sensor consists of the deceleration sensor.
(3) The deceleration sensor is built into the rear airbag sensor, and the distortion that is created in the sensor is converted into an electric signal based on the vehicle deceleration rate during a rear side collision. Accordingly, the extent of the initial collision can be detected in detail.

(d) CENTER AIRBAG SENSOR ASSEMBLY
(1) General
- The center airbag sensor assembly is installed on the center floor under the instrument panel.
- The center airbag sensor assembly consists of the deceleration sensor, electronic safing sensor, ignition control circuit and diagnostic circuit.
- The center airbag sensor assembly receives signals from the deceleration sensor and electronic safing sensor built into the center airbag sensor assembly and front airbag sensor. Then the center airbag sensor assembly determines whether or not the driver, front passenger and knee airbags and seat belt pretensioner should be activated, and diagnoses system malfunctions.
- The center airbag sensor assembly receives signals from the deceleration sensor and the electronic safing sensor built into the center airbag sensor assembly and the side airbag sensor and determines whether or not the front seat side airbag assembly and the curtain shield airbag assembly should be activated, and diagnoses system malfunctions.

- The center airbag sensor assembly receives signals from the deceleration sensor and the electronic safing sensor built into the center airbag sensor assembly and the rear airbag sensor, and determines whether or not the curtain shield airbag assembly should be activated, and diagnoses system malfunctions.

(2) Deceleration sensor and ignition control circuit
- The ignition control circuit performs calculations based on the signal output from the deceleration sensors of the center airbag sensor assembly and front airbag sensor. If the calculated values are greater than the specified values, it activates ignition operation.

(3) Electronic safing sensor
- The electronic safing sensor is built into the center airbag sensor assembly. During a frontal collision, front side collision, front side side collision, the sensor turns on and outputs an ON signal to the center airbag sensor assembly if a deceleration rate greater than the specified value is applied to the electronic safing sensor.

(4) Backup power source
- The backup power source consists of a power supply capacitor and a DC-DC converter. When the power system does not function during a collision, the power supply capacitor discharges and supplies electric power to the system. The DC-DC converter operates as a boosting transformer when the battery voltage falls below a predetermined level.

(5) Diagnostic circuit
- This circuit constantly diagnoses system malfunctions. When a malfunction is detected, it lights up the SRS warning light on the combination meter to inform the driver.

(6) Memory circuit
- When a malfunction is detected in the diagnostic circuit, it is coded and stored in the memory circuit.

(e) SRS WARNING LIGHT

(1) The SRS warning light is located on the combination meter. It comes on to inform the driver of system trouble when a malfunction is detected in self-diagnosis of the center airbag sensor assembly. Under normal operating conditions when the ignition switch is turned to on (IG), it comes on for approximately 6 seconds and then goes off.

3. DEPLOYMENT CONDITION

When the vehicle collides and the shock is greater than the specified value, the SRS is activated automatically. The center airbag sensor assembly includes the safing sensor and deceleration sensor. The safing sensor was designed to be turned on at a smaller deceleration rate than the deceleration sensor.

(a) The center airbag sensor assembly determines whether or not ignition is necessary based on signals from the deceleration sensor and the front airbag sensor.(*) If the safing sensor turns on simultaneously, current flows to the squibs to deploy the SRS as shown in the illustration below.

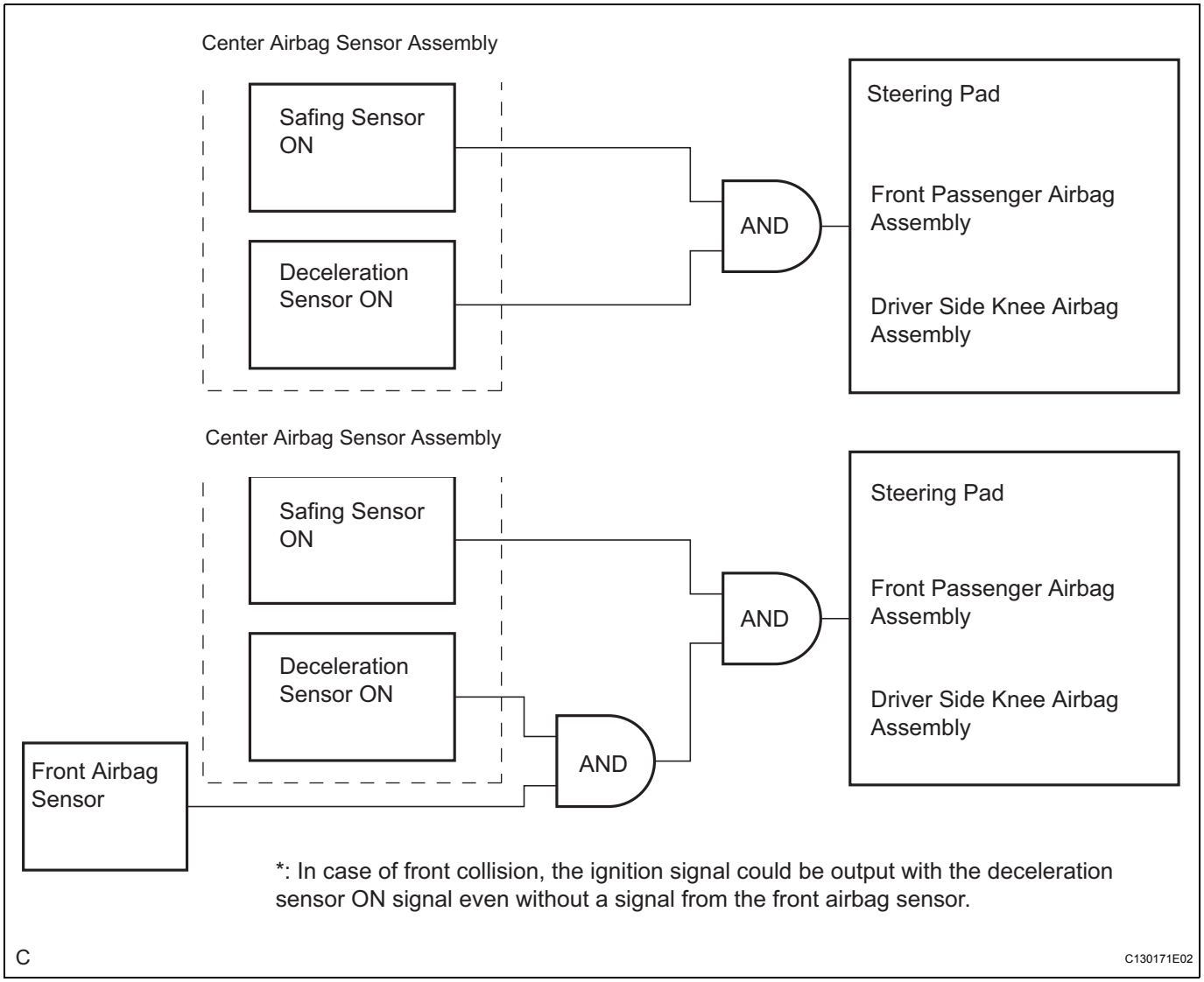

(b) The center airbag sensor assembly determines whether or not ignition is necessary based on signals from the side airbag sensor. If the safing sensor turns on simultaneously, current flows to the squib to deploy the SRS as shown in the illustration below.

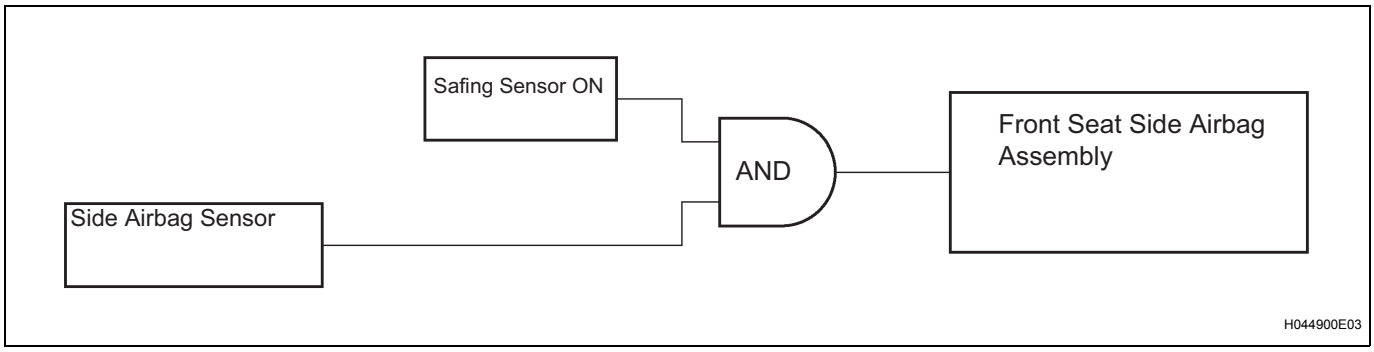

(c) The center airbag sensor assembly determines whether or not ignition is necessary based on signals from the rear airbag sensor. If the safing sensor turns on simultaneously, current flows to the squib to deploy the SRS as shown in the illustration below.(*)

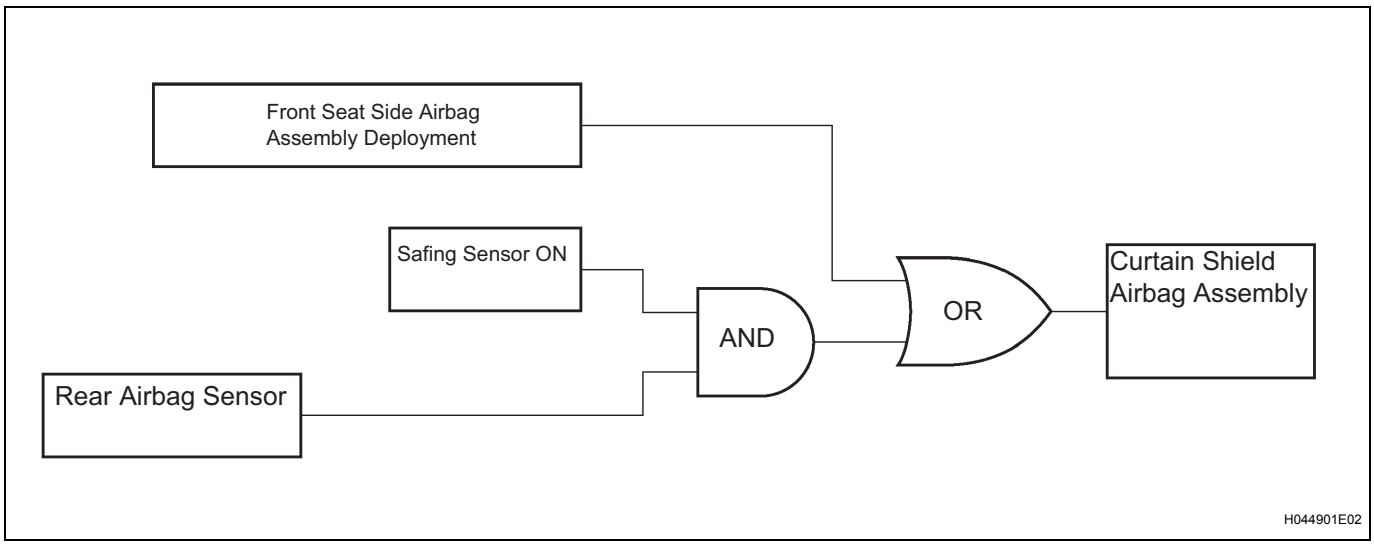

HINT:
*: If the front seat side airbag assembly deploys, the curtain shield airbag assembly will also deploy, regardless of whether the signal is output from the rear airbag sensor.

HOW TO PROCEED WITH TROUBLESHOOTING

The intelligent tester can be used in steps 4, 6, 8 and 9.

1	VEHICLE BROUGHT TO WORKSHOP

NEXT

2	CUSTOMER PROBLEM ANALYSIS

NEXT

3	WARNING LIGHT CHECK

NEXT

4	DTCs CHECK (Present and Past DTCs)

- DTCs ARE OUTPUT (INCLUDING NORMAL SYSTEM CODE): Go to step 5
- DTCs ARE NOT OUTPUT: PROBLEM SYMPTOMS TABLE

5	DTCs CHART

NEXT

6	CIRCUIT INSPECTION

NEXT

7	REPAIR

NEXT

8	CLEAR DTCs (Present and Past DTCs)

NEXT

9	DTCs CHECK (Present and Past DTCs)

→ DTCs ARE NOT OUTPUT: Go to step 10

→ DTCs ARE OUTPUT: Go to step 5

10	SYMPTOM SIMULATION

→ WARNING LIGHT REMAINS OFF: Go to step 11

→ WARNING LIGHT IS ON: Go to step 5

11	CONFIRMATION TEST

NEXT

END

PROBLEM SYMPTOMS TABLE

HINT:
Proceed to the troubleshooting for each circuit in the table below.

AIRBAG SYSTEM:

Symptom	Suspected area	See page
1. The SRS warning light goes off after the primary check, but comes on again during the constant check.	SRS Warning Light Remains ON	RS-190
2. With the ignition switch in the ON position, the SRS warning light sometimes comes on after approximately 6 seconds.	SRS Warning Light Remains ON	RS-190
3. The SRS warning light always comes on even when DTC is not output.	SRS Warning Light Remains ON	RS-190
With the ignition switch in the ON position, the SRS warning light does not come on.	SRS Warning Light does not Come On	RS-195
1. Although an SRS warning light operates normally, DTC or a normal system code is not displayed.	TC and CG Terminal Circuit	RS-197
2. Although terminals TC and CG of DLC3 are not connected, DTC or a normal system code is displayed.	TC and CG Terminal Circuit	RS-197

TERMINALS OF ECU

1. AIRBAG SENSOR ASSEMBLY CENTER

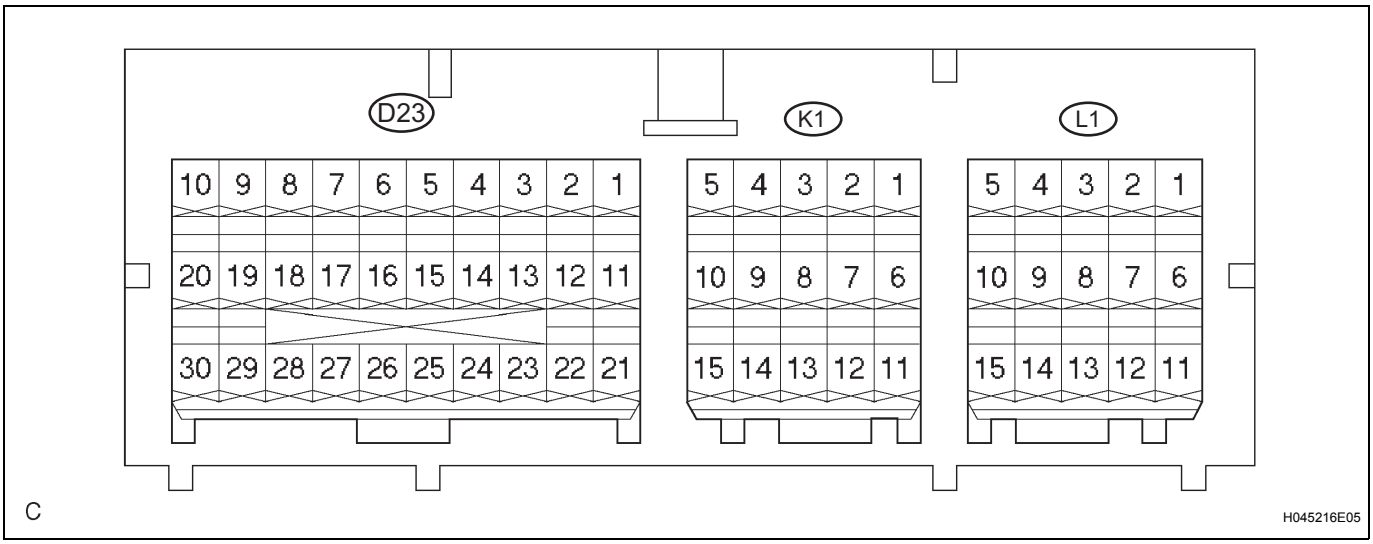

Terminal No.	Terminal Symbol	Destination
D23-1	P2+	Front passenger airbag assembly (P squib, Dual stage - 2nd step)
D23-2	P2-	Front passenger airbag assembly (P squib, Dual stage - 2nd step)
D23-3	P-	Front passenger airbag assembly (P squib)
D23-4	P+	Front passenger airbag assembly (P squib)
D23-5	D+	Steering pad (D squib)
D23-6	D-	Steering pad (D squib)
D23-7	D2-	Steering pad (D squib, Dual stage - 2nd step)
D23-8	D2+	Steering pad (D squib, Dual stage - 2nd step)
D23-9	DK+	Driver side knee airbag assembly (Knee airbag (D side) squib)
D23-10	DK-	Driver side knee airbag assembly (Knee airbag (D side) squib)
D23-13	PBEW	Accessory meter assembly
D23-14	LA	Combination meter (SRS warning light)
D23-15	TC	DLC3
D23-16	SIL	DLC3
D23-17	P-AB	Accessory meter assembly (Passenger airbag ON/OFF indicator)
D23-18	GSW	Body ECU
D23-21	IG2	IG2 Fuse (Power Source)
D23-22	GSW2	ECM
D23-23	PAON	Accessory meter assembly (Passenger airbag ON/OFF indicator)
D23-25	E1	Ground
D23-26	E2	Ground
D23-27	-SR	Front airbag sensor RH
D23-28	-SL	Front airbag sensor LH
D23-29	+SR	Front airbag sensor RH
D23-30	+SL	Front airbag sensor LH
K1-1	PD-	Front seat outer belt assembly LH (P/T squib (D seat side))
K1-2	PD+	Front seat outer belt assembly LH (P/T squib (D seat side))

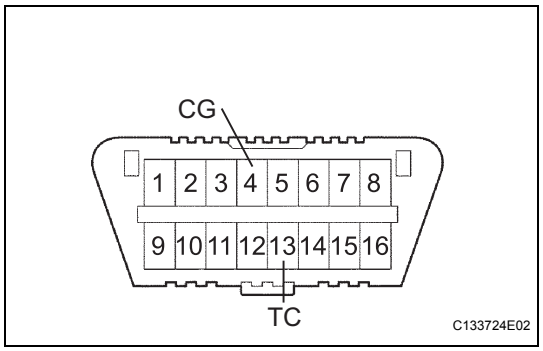

DTC CHECK / CLEAR

1. SUPPLEMENTAL RESTRAINT SYSTEM DTC CHECK (USING SST CHECK WIRE)

(a) Check the DTCs (Present trouble code).

(1) Turn the ignition switch on (IG), and wait for approximately 60 seconds.

(2) Using SST, connect terminals TC and CG of the DLC3.

SST 09843-18040

NOTICE:

Connect the terminals to the correct positions to avoid a malfunction.

(b) Check the DTCs (Past trouble code).

(1) Using SST, connect terminals TC and CG of the DLC3.

SST 09843-18040

NOTICE:

Connect the terminals to the correct positions to avoid a malfunction.

(2) Turn the ignition switch on (IG), and wait for approximately 60 seconds.

(c) Read the DTCs.

(1) Read the blinking patterns of the DTCs. As examples, the blinking patterns for the normal system code and trouble codes 11 and 31 are shown in the illustration to the left.

- Normal system code indication (without past trouble code)
  The light blinks twice per second.
- Normal system code indication (with past trouble code)
  When the past trouble code is stored in the airbag sensor assembly center, the light blinks only once per second.
- Trouble code indication
  The first blinking indicates the first DTC. The second blinking occurs after a 1.5-second pause.

If there are more than 1 code, there will be a 2.5-second pause between each code. After all codes are shown, there will be a 4.0-second pause, and they all will be repeated.

HINT:

- If 2 or more malfunctions are found, the indication begins with the smaller numbered code.
- If DTCs are indicated without connecting the terminals, proceed to the "TC Terminal Circuit" (See page RS-197).

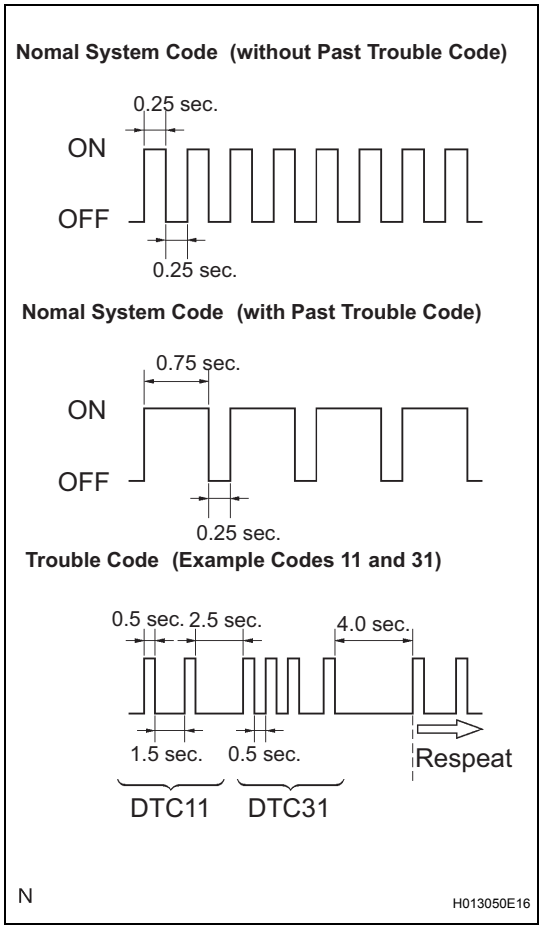

RS

2. DTC CLEAR (USING SST CHECK WIRE)

(a) Clear the DTCs.

(1) When the ignition switch is turned off, the DTCs are cleared.
HINT:
Depending on the DTC, the code may not be cleared by turning off the ignition switch. In this case, proceed to the next procedure.

(2) Using SST, connect terminals TC and CG of the DLC3, and then turn the ignition switch on (IG).
SST 09843-18040

(3) Disconnect terminal TC of the DLC3 within 3 to 10 seconds after the DTCs are output, and check if the SRS warning light comes on after 3 seconds.

(4) Within 2 to 4 seconds after the SRS warning light comes on, connect terminals TC and CG of the DLC3.

(5) The SRS warning light should go off within 2 to 4 seconds after connecting terminals TC and CG of the DLC3. Then, disconnect terminal TC within 2 to 4 seconds after the SRS warning light goes off.

(6) The SRS warning light comes on again within 2 to 4 seconds after disconnecting terminal TC. Then, reconnect terminals TC and CG within 2 to 4 seconds after the SRS warning light comes on, connect terminals TC and CG of the DLC3.

(7) Check if the SRS warning light goes off within 2 to 4 seconds after connecting terminals TC and CG of the DLC3. Also check if the normal system code is output within 1 second after the SRS warning light goes off.
If DTCs are not cleared, repeat this procedure until the codes are cleared.

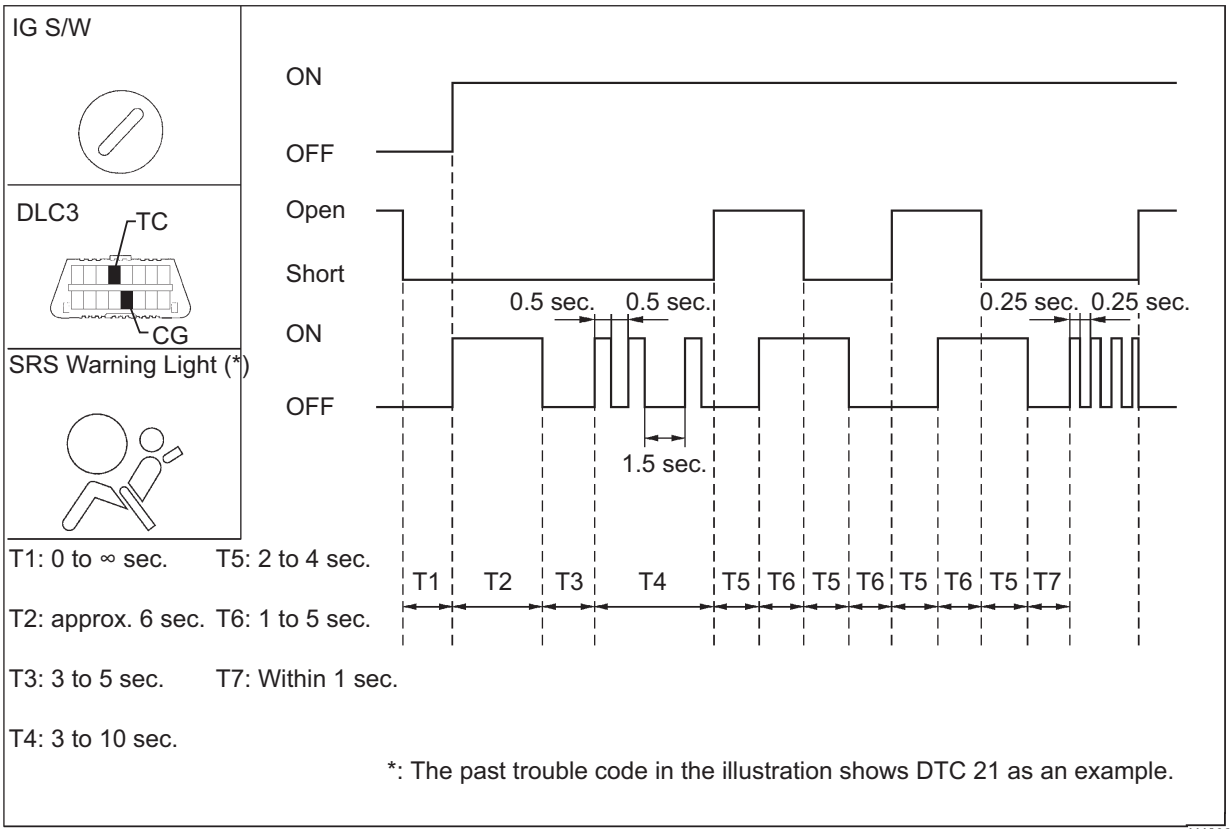

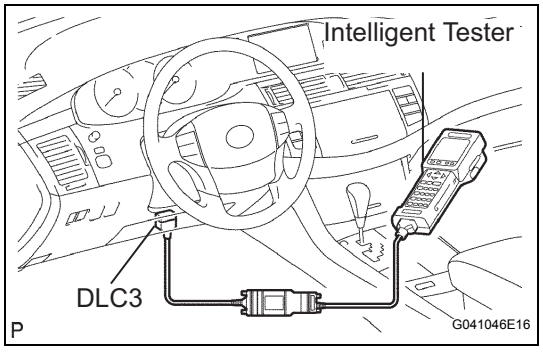

3. SUPPLEMENTAL RESTRAINT SYSTEM DTC CHECK (USING INTELLIGENT TESTER)

(a) Check the DTCs.
(1) Connect the intelligent tester to the DLC3.
(2) Turn the ignition switch on (IG).
(3) Check the DTCs by following the prompts on the tester screen.
HINT:
Refer to the intelligent tester operator's manual for further details.

(b) Clear the DTCs.
(1) Connect the intelligent tester to the DLC3.
(2) Turn the ignition switch on (IG).
(3) Clear the DTCs by following the prompts on the tester screen.
HINT:
Refer to the intelligent tester operator's manual for further details.

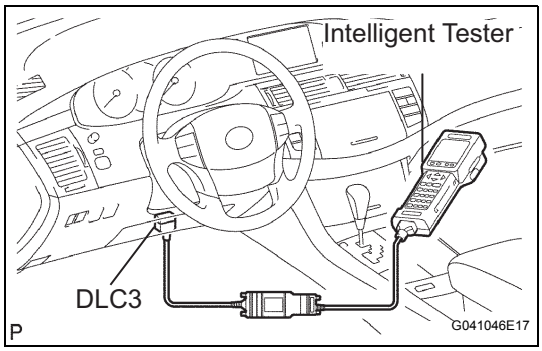

CHECK MODE PROCEDURE

1. Check mode (Signal check):

DTC CHECK

(a) Connect the intelligent tester to the DLC3.

(b) Turn the ignition switch on (IG).

(c) Select the "SIGNAL CHECK", and proceed checking with the intelligent tester.

NOTICE:

Select the "SIGNAL CHECK" from the "DTC CHECK" screen displayed on the intelligent tester to clear the output DTCs (both present and past).

HINT:

- DTCs can be detected more sensitively in check mode than in normal diagnosis mode.
- Perform check mode inspection when a malfunction in each squib circuit is suspected even after the normal system code is output through normal diagnosis mode inspection.

DATA LIST / ACTIVE TEST

HINT:
By accessing the DATA LIST displayed by the intelligent tester, you can perform such functions as reading the values of switches and sensors without removing any parts. Reading the DATA LIST is the first step of troubleshooting and is one method to shorten labor time.

1. DATA LIST FOR AIRBAG SENSOR ASSEMBLY CENTER

(a) Connect the intelligent tester to the DLC3.
(b) Turn the ignition switch on (IG).
(c) Following the display on the tester screen, read the "DATA LIST".

Item	Measurement Item/ Range (Display)	Normal Condition	Diagnostic Note
D SEAT POSITION	Seat position (Driver side)/ FORWARD: Seat position is forward BKWARD: Seat position is rearward FAIL: A failure is detected	FORWARD/BKWARD	-
PASSENGER CLASS	Passenger classification/ NG: Data is not determined OFF: Vacant CHILD: Child (less than 36 kg (79.37 lb)) is seated AF05: Adult (36 to 54 kg (79.37 to 119.05 lb)) is seated AM50: Adult (More than 54 kg (119.05 lb)) is seated FAIL: A failure is detected	OFF/CHILD/AF05/AM50	-
D BUCKLE SW	Buckle switch (Driver side)/ UNSET: The seat belt is not fastened SET: The seat belt is fastened NG: Data is not determined	SET	When the seat belt (Driver side) is fastened.
P BUCKLE SW	Buckle switch (Passenger side)/ UNSET: The seat belt is not fastened SET: The seat belt is fastened NG: Data is not determined	SET	When the seat belt (Passenger side) is fastened.
DISPLAY TYPE	Display type information/ LR: The display is indicated by LH/RH DP: The display is indicated by Driver/Passenger	DP	-
PAST CODES	Number of past trouble codes/ Min.: 0, Max.: 255	0 to 255	-

DIAGNOSTIC TROUBLE CODE CHART

If a trouble code is displayed during the DTC check, check the circuit listed for the code in the table below (refer to the appropriate page).

HINT:

- When the SRS warning light remains on and the DTC output is the normal system code, a voltage source drop is likely to occur. This malfunction is not stored in the memory by the airbag sensor assembly center. If the power source voltage returns to normal, the SRS warning light will automatically go off.
- When 2 or more codes are indicated, the code with the lower number appears first.
- If a code is not listed on the display chart, the airbag sensor assembly center may have failed.
- In the case of any malfunction concerning an open circuit, short to ground, or short to B+ due to a squib, other trouble codes may not be detected. In this case, repair the malfunction currently indicated and then perform malfunction diagnosis again.
- Mark in the check mode column:
  *1: DTC is not corresponding to the check mode.
  *2: DTC is corresponding to the check mode.
- When DTC B1650/32 is detected as a result of troubleshooting for the Supplemental Restraint System, perform troubleshooting for the occupant classification system as shown in the chart below.

AIRBAG SYSTEM

DTC No.	Detection Item	Trouble Area	Check Mode	SRS Warning Light	See page
B1000/31	Center Airbag Sensor Assembly Malfunction	Center airbag sensor assembly	*1	ON	RS-43
B1610/13	Front Airbag Sensor RH Circuit Malfunction	1. Instrument panel wire 2. Engine room main wire 3. Front airbag sensor RH 4. Center airbag sensor assembly	*1	ON	RS-44
B1615/14	Front Airbag Sensor LH Circuit Malfunction	1. Instrument panel wire 2. Engine room main wire 3. Front airbag sensor LH 4. Center airbag sensor assembly	*1	ON	RS-53
B1620/21	Driver Side - Side Airbag Sensor Circuit Malfunction	1. Floor wire 2. Side airbag sensor LH 3. Rear airbag sensor LH 4. Center airbag sensor assembly	*1	ON	RS-62

DTC No.	Detection Item	Trouble Area	Check Mode	SRS Warning Light	See page
B1625/22	Front Passenger Side - Side Airbag Sensor Circuit Malfunction	1. Floor wire No. 2 2. Side airbag sensor RH 3. Rear airbag sensor RH 4. Center airbag sensor assembly	*1	ON	RS-70
B1630/23	Driver Side Rear Airbag Sensor Circuit Malfunction	1. Floor wire 2. Rear airbag sensor LH 3. Side airbag sensor LH 4. Center airbag sensor assembly	*1	ON	RS-78
B1635/24	Front Passenger Side Rear Airbag Sensor Circuit Malfunction	1. Floor wire No. 2 2. Rear airbag sensor RH 3. Side airbag sensor RH 4. Center airbag sensor assembly	*1	ON	RS-82
B1650/32	Occupant Classification System Malfunction	1. Floor wire No. 2 2. Front seat wire RH (with Power seat) 3. Occupant classification system 4. Center airbag sensor assembly	*1	ON	RS-87
B1653/35	Seat Position Airbag Sensor Circuit Malfunction	1. Floor wire 2. Seat position airbag sensor 3. Center airbag sensor assembly	*1	ON	RS-98
B1655/37	Driver Side Seat Belt Buckle Switch Circuit Malfunction	1. Floor wire 2. Front seat inner belt assembly LH 3. Center airbag sensor assembly	*1	ON	RS-105
B1660/43	Passenger Airbag ON / OFF Indicator Circuit Malfunction	1. Instrument panel wire 2. Accessory meter assembly (Passenger airbag ON/OFF indicator) 3. Center airbag sensor assembly	*1	ON	RS-111
B1662/45	Indicator Light Circuit Malfunction	1. Instrument panel wire 2. Combination meter (SRS warning light) 3. Airbag sensor assembly center	*1	ON	RS-123
B1800/51	Short in Driver Side Squib Circuit	1. Instrument panel wire 2. Spiral cable 3. Steering pad 4. Center airbag sensor assembly	*2	ON	RS-127
B1801/51	Open in Driver Side Squib Circuit	Same as DTC No. B1800/51	*2	ON	RS-127
B1802/51	Short to GND in Driver Side Squib Circuit	Same as DTC No. B1800/51	*2	ON	RS-127
B1803/51	Short to B+ in Driver Side Squib Circuit	Same as DTC No. B1800/51	*2	ON	RS-127

DTC No.	Detection Item	Trouble Area	Check Mode	SRS Warning Light	See page
B1805/52	Short in Front Passenger Side Squib Circuit	1. Instrument panel wire 2. Instrument panel wire assembly 3. Front passenger airbag assembly 4. Center airbag sensor assembly	*2	ON	RS-134
B1806/52	Open in Front Passenger Side Squib Circuit	Same as DTC No. B1805/52	*2	ON	RS-134
B1807/52	Short to GND in Front Passenger Side Squib Circuit	Same as DTC No. B1805/52	*2	ON	RS-134
B1808/52	Short to B+ in Front Passenger Side Squib Circuit	Same as DTC No. B1805/52	*2	ON	RS-134
B1810/53	Short in Driver Side Squib 2nd Step Circuit	1. Instrument panel wire 2. Spiral cable 3. Steering pad 4. Center airbag sensor assembly	*2	ON	RS-141
B1811/53	Open in Driver Side Squib 2nd Step Circuit	Same as DTC No. B1810/53	*2	ON	RS-141
B1812/53	Short to GND in Driver Side Squib 2nd Step Circuit	Same as DTC No. B1810/53	*2	ON	RS-141
B1813/53	Short to B+ in Driver Side Squib 2nd Step Circuit	Same as DTC No. B1810/53	*2	ON	RS-141
B1815/54	Short in Front Passenger Side Squib 2nd Step Circuit	1. Instrument panel wire 2. Instrument panel wire assembly 3. Front passenger airbag assembly 4. Center airbag sensor assembly	*2	ON	RS-148
B1816/54	Open in Front Passenger Side Squib 2nd Step Circuit	Same as DTC No. B1815/54	*2	ON	RS-148
B1817/54	Short to GND in Front Passenger Side Squib 2nd Step Circuit	Same as DTC No. B1815/54	*2	ON	RS-148
B1818/54	Short to B+ in Front Passenger Side Squib 2nd Step Circuit	Same as DTC No. B1815/54	*2	ON	RS-148
B1820/55	Short in Driver Side - Side Squib Circuit	1. Floor wire 2. Front seat side airbag assembly LH 3. Center airbag sensor assembly	*2	ON	RS-155
B1821/55	Open in Driver Side - Side Squib Circuit	Same as DTC No. B1820/55	*2	ON	RS-155
B1822/55	Short to GND in Driver Side - Side Squib Circuit	Same as DTC No. B1820/55	*2	ON	RS-155

DTC No.	Detection Item	Trouble Area	Check Mode	SRS Warning Light	See page
B1823/55	Short to B+ in Driver Side - Side Squib Circuit	Same as DTC No. B1820/55	*2	ON	RS-155
B1825/56	Short in Front Passenger Side - Side Squib Circuit	1. Floor wire No. 2 2. Front seat side airbag assembly RH 3. Center airbag sensor assembly	*2	ON	RS-160
B1826/56	Open in Front Passenger Side - Side Squib Circuit	Same as DTC No. B1825/56	*2	ON	RS-160
B1827/56	Short to GND in Front Passenger Side - Side Squib Circuit	Same as DTC No. B1825/56	*2	ON	RS-160
B1828/56	Short to B+ in Front Passenger Side - Side Squib Circuit	Same as DTC No. B1825/56	*2	ON	RS-160
B1830/57	Short in Driver Side Curtain Shield Squib Circuit	1. Floor wire 2. Curtain shield airbag assembly LH 3. Center airbag sensor assembly	*2	ON	RS-165
B1831/57	Open in Driver Side Curtain Shield Squib Circuit	Same as No. DTC B1830/57	*2	ON	RS-165
B1832/57	Short to GND in Driver Side Curtain Shield Squib Circuit	Same as No. DTC B1830/57	*2	ON	RS-165
B1833/57	Short to B+ in Driver Side Curtain Shield Squib Circuit	Same as No. DTC B1830/57	*2	ON	RS-165
B1835/58	Short in Front Passenger Side Curtain Shield Squib Circuit	1. Floor wire No. 2 2. Curtain shield airbag assembly RH 3. Center airbag sensor assembly	*2	ON	RS-170
B1836/58	Open in Front Passenger Side Curtain Shield Squib Circuit	Same as DTC No. B1835/58	*2	ON	RS-170
B1837/58	Short to GND in Front Passenger Side Curtain Shield Squib Circuit	Same as DTC No. B1835/58	*2	ON	RS-170
B1838/58	Short to B+ in Front Passenger Side Curtain Shield Squib Circuit	Same as DTC No. B1835/58	*2	ON	RS-170
B1860/64	Short in Driver Side Knee Airbag Squib Circuit	1. Instrument panel wire 2. Driver side knee airbag assembly 3. Center airbag sensor assembly	*2	ON	RS-175
B1861/64	Open in Driver Side Knee Airbag Squib Circuit	Same as DTC No. B1860/64	*2	ON	RS-175
B1862/64	Short to GND in Driver Side Knee Airbag Squib Circuit	Same as DTC No. B1860/64	*2	ON	RS-175
B1863/64	Short to B+ in Driver Side Knee Airbag Squib Circuit	Same as DTC No. B1860/64	*2	ON	RS-175

DTC No.	Detection Item	Trouble Area	Check Mode	SRS Warning Light	See page
B1900/73	Short in Driver Side Front Pretensioner Squib Circuit	1. Floor wire 2. Front seat outer belt assembly LH 3. Center airbag sensor assembly	*2	ON	RS-180
B1901/73	Open in Driver Side Front Pretensioner Squib Circuit	Same as DTC No. B1900/73	*2	ON	RS-180
B1902/73	Short to GND in Driver Side Front Pretensioner Squib Circuit	Same as DTC No. B1900/73	*2	ON	RS-180
B1903/73	Short to B+ in Driver Side Front Pretensioner Squib Circuit	Same as DTC No. B1900/73	*2	ON	RS-180
B1905/74	Short in Front Passenger Side Front Pretensioner Squib Circuit	1. Floor wire No. 2 2. Front seat outer belt assembly RH 3. Center airbag sensor assembly	*2	ON	RS-185
B1906/74	Open in Front Passenger Side Front Pretensioner Squib Circuit	Same as DTC No. B1905/74	*2	ON	RS-185
B1907/74	Short to GND in Front Passenger Side Front Pretensioner Squib Circuit	Same as DTC No. B1905/74	*2	ON	RS-185
B1908/74	Short to B+ in Front Passenger Side Front Pretensioner Squib Circuit	Same as DTC No. B1905/74	*2	ON	RS-185

DTC	B1000/31	Center Airbag Sensor Assembly Malfunction

DESCRIPTION

The center airbag sensor assembly consists of the airbag sensor, the safing sensor, the drive circuit, the diagnosis circuit, the ignition control, etc.
If the center airbag sensor assembly receives signals from the airbag sensor, it determines whether or not the SRS should be activated.
DTC B1000/31 is recorded when a malfunction is detected in the center airbag sensor assembly.

DTC No.	DTC Detecting Condition	Trouble Area
B1000/31	Center airbag sensor assembly malfunction	Center airbag sensor assembly

HINT:
When a trouble code is displayed simultaneously with B1000/31, repair the malfunction indicated by this code (except B1000/31) first.

INSPECTION PROCEDURE

1	CHECK CENTER AIRBAG SENSOR ASSEMBLY

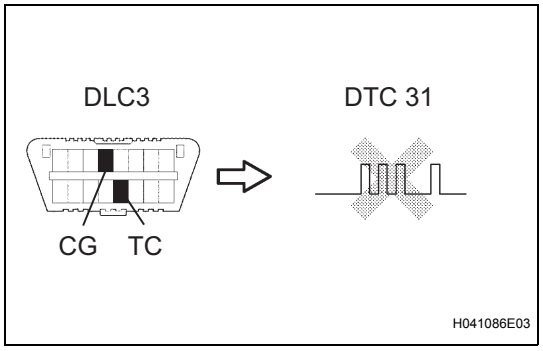

(a) Turn the ignition switch off.
(b) Disconnect the negative (-) terminal cable from the battery, and wait for at least 90 seconds.
(c) Connect the negative (-) terminal cable to the battery, and wait for at least 2 seconds.
(d) Turn the ignition switch on (IG), and wait for at least 60 seconds.
(e) Clear the DTCs stored in memory (See page RS-34).
(f) Turn the ignition switch off.
(g) Turn the ignition switch on (IG), and wait for at least 60 seconds.
(h) Check the DTCs (See page RS-34).
OK:
DTC B1000/31 is not output.

NG → **REPLACE CENTER AIRBAG SENSOR ASSEMBLY**

OK

USE SIMULATION METHOD TO CHECK

DTC	B1610/13	Front Airbag Sensor RH Circuit Malfunction

DESCRIPTION

The front airbag sensor RH consists of the diagnostic circuit, the frontal deceleration sensor, etc.
If the center airbag sensor assembly receives signals from the frontal deceleration sensor, it determines whether or not the SRS should be activated.
DTC B1610/13 is recorded when a malfunction is detected in the front airbag sensor RH circuit.

DTC No.	DTC Detecting Condition	Trouble Area
B1610/13	• The airbag sensor assembly center receives a line short circuit signal, an open circuit signal, a short circuit to ground signal or a short circuit to B+ signal in the front airbag sensor RH circuit for 2 seconds. • Front airbag sensor RH malfunction • Center airbag sensor assembly malfunction	• Instrument panel wire • Engine room main wire • Front airbag sensor RH • Center airbag sensor assembly

WIRING DIAGRAM

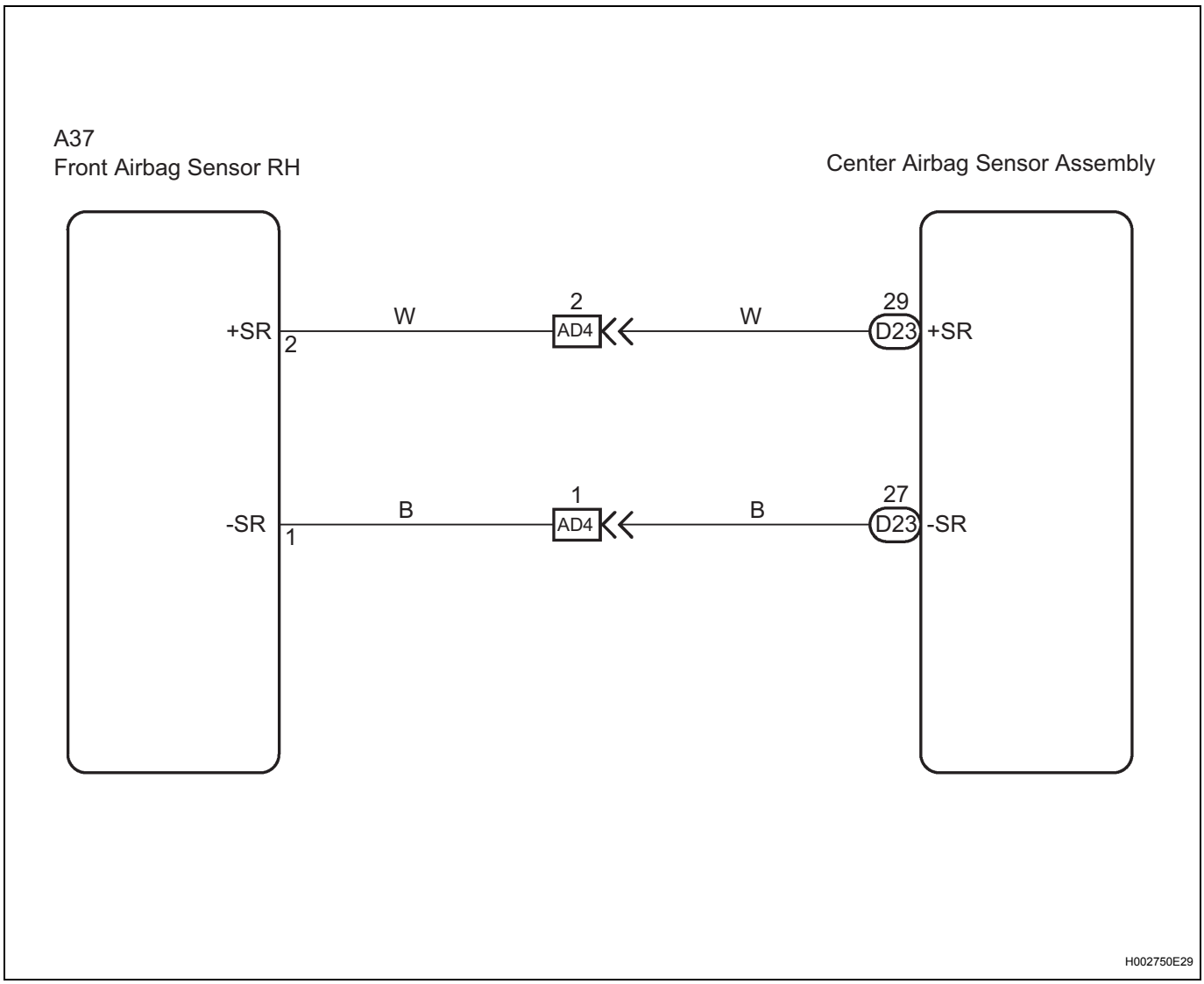

RS

INSPECTION PROCEDURE

1	CHECK DTC

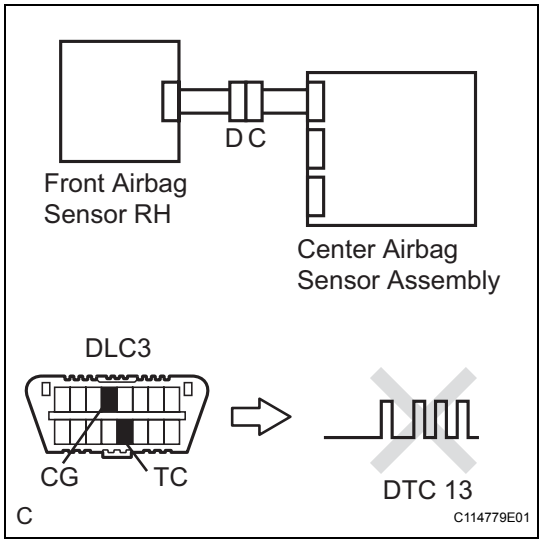

(a) Turn the ignition switch on (IG), and wait for at least 60 seconds.
(b) Clear the DTCs stored in memory (See page RS-34).
(c) Turn the ignition switch off.
(d) Turn the ignition switch on (IG), and wait for at least 60 seconds.
(e) Check the DTCs (See page RS-34).
OK:
DTC B1610/13 is not output.
HINT:
Codes other than DTC B1610/13 may be output at this time, but they are not related to this check.

NG → **Go to step 2**

OK

USE SIMULATION METHOD TO CHECK

2	CHECK CONNECTION OF CONNECTORS

(a) Turn the ignition switch off.
(b) Disconnect the negative (-) terminal cable from the battery, and wait for at least 90 seconds.
(c) Check that the connectors are properly connected to the center airbag sensor assembly and the front airbag sensor RH.
OK:
The connectors are properly connected.

NG → **CONNECT CONNECTORS, THEN GO TO STEP 1**

OK

3 CHECK FRONT AIRBAG SENSOR RH CIRCUIT (OPEN)

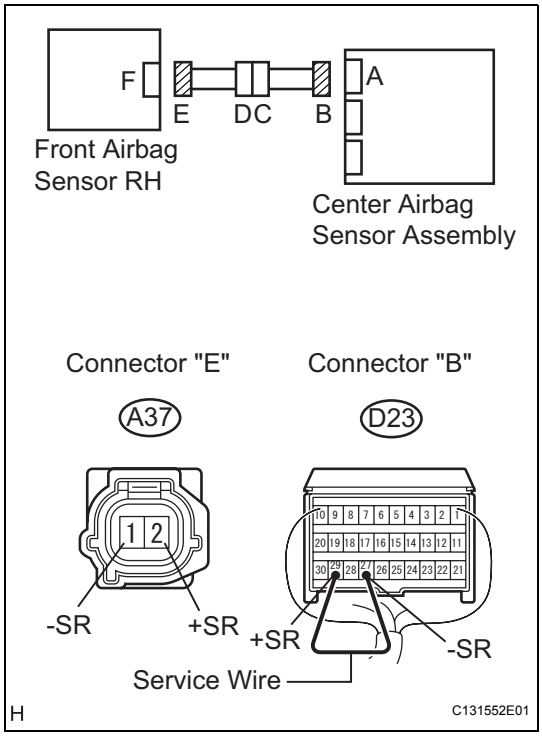

(a) Disconnect the connectors from the center airbag sensor assembly and the front airbag sensor RH.
(b) Using a service wire, connect D23-29 (+SR) and D23-27 (-SR) of connector "B".
NOTICE:
Do not forcibly insert a service wire into the terminals of the connector when connecting.
(c) Measure the resistance according to the value(s) in the table below.
Standard resistance

Tester connection	Condition	Specified condition
A37-2 (+SR) - A37-1 (-SR)	Always	Below 1 Ω

NG → **Go to step 8**

OK

4 CHECK FRONT AIRBAG SENSOR RH CIRCUIT (SHORT)

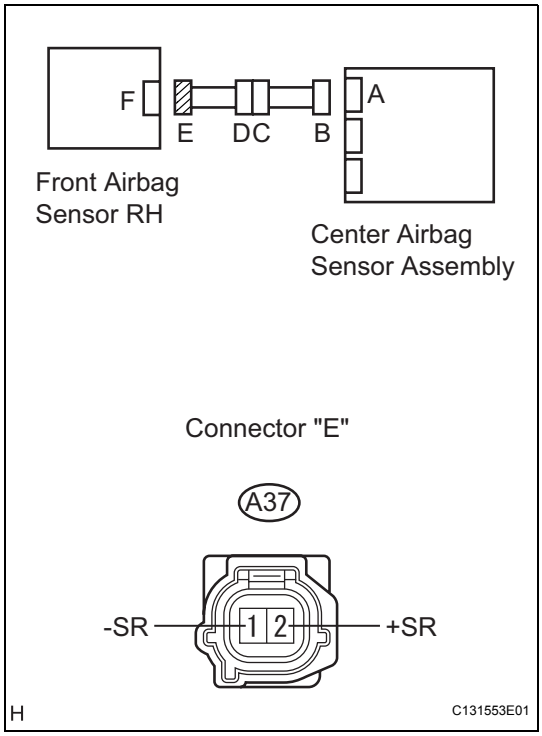

(a) Disconnect the service wire from connector "B".
(b) Measure the resistance according to the value(s) in the table below.
Standard resistance

Tester connection	Condition	Specified condition
A37-2 (+SR) - A37-1 (-SR)	Always	1 MΩ or higher

NG → **Go to step 9**

OK

RS

5 CHECK FRONT AIRBAG SENSOR RH CIRCUIT (SHORT TO B+)

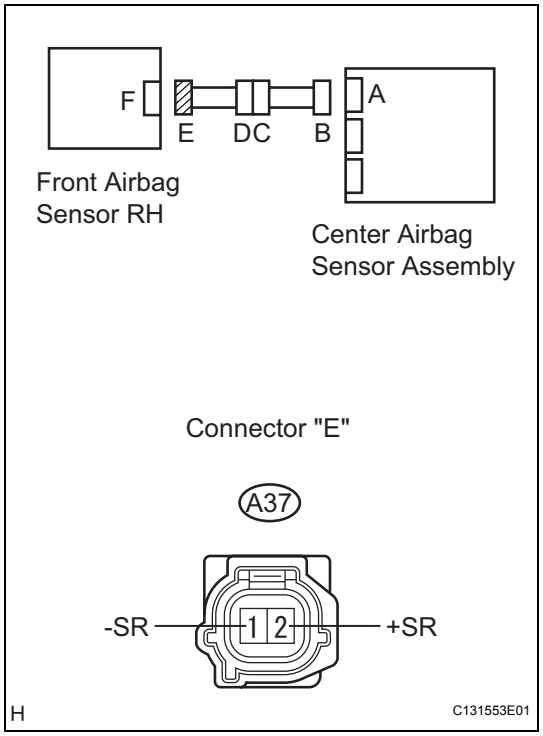

(a) Connect the negative (-) terminal cable to the battery, and wait for at least 2 seconds.
(b) Turn the ignition switch on (IG).
(c) Measure the voltage according to the value(s) in the table below.

Standard voltage

Tester connection	Condition	Specified condition
A37-2 (+SR) - Body ground	Ignition switch on (IG)	Below 1 V
A37-1 (-SR) - Body ground	Ignition switch on (IG)	Below 1 V

NG → **Go to step 10**

OK

6 CHECK FRONT AIRBAG SENSOR RH CIRCUIT (SHORT TO GROUND)

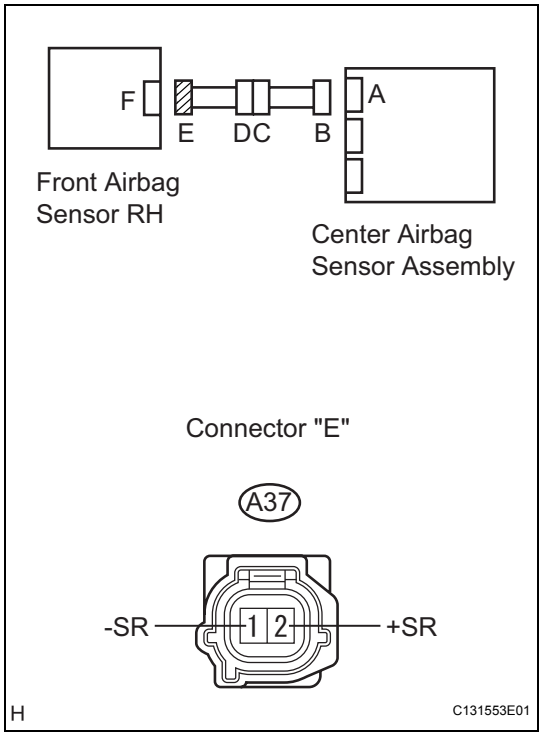

(a) Turn the ignition switch off.
(b) Disconnect the negative (-) terminal cable from the battery, and wait for at least 90 seconds.
(c) Measure the resistance according to the value(s) in the table below.

Standard resistance

Tester connection	Condition	Specified condition
A37-2 (+SR) - Body ground	Always	1 MΩ or higher
A37-1 (-SR) - Body ground	Always	1 MΩ or higher

NG → **Go to step 11**

OK

7	CHECK FRONT AIRBAG SENSOR RH

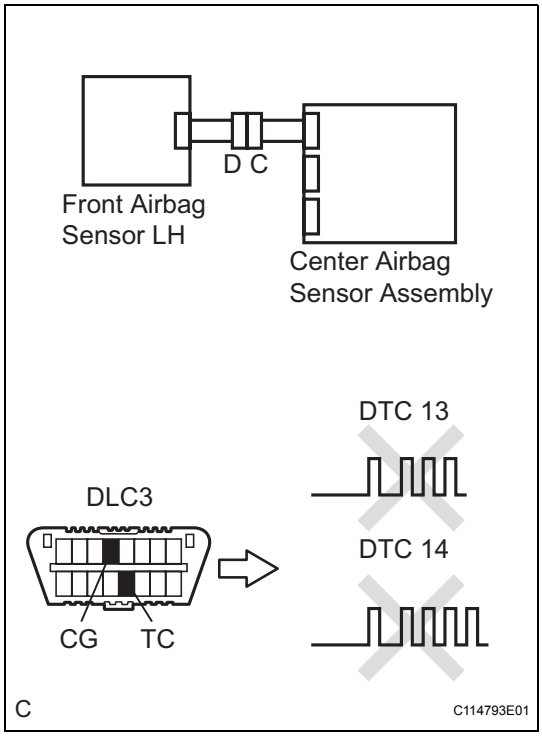

(a) Connect the connectors to the center airbag sensor assembly.
(b) Interchange the front airbag sensor RH with LH and connect the connectors to them.
(c) Connect the negative (-) terminal cable to the battery, and wait for at least 2 seconds.
(d) Turn the ignition switch on (IG), and wait for at least 60 seconds.
(e) Clear the DTCs stored in memory (See page RS-34).
(f) Turn the ignition switch off.
(g) Turn the ignition switch on (IG), and wait for at least 60 seconds.
(h) Check the DTCs (See page RS-34).

Result

Result	Proceed to
DTC B1610/13 is output.	A
DTC B1615/14 is output.	B
DTC B1610/13 and B1615/14 are not output.	C

HINT:
Codes other than DTC B1610/13 and B1615/14 may be output at this time, but they are not related to this check.

A → **REPLACE CENTER AIRBAG SENSOR ASSEMBLY**

B → **REPLACE FRONT AIRBAG SENSOR RH**

C

USE SIMULATION METHOD TO CHECK

8	CHECK INSTRUMENT PANEL WIRE (OPEN)

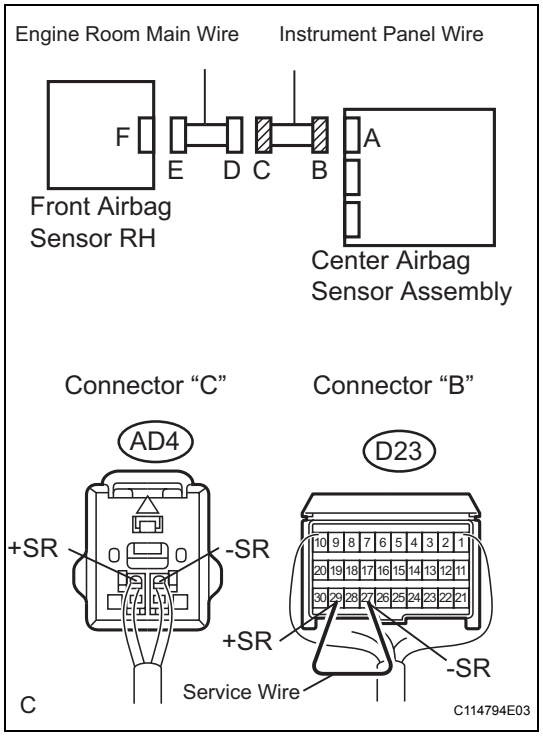

(a) Disconnect the instrument panel wire connector from the engine room main wire.
HINT:
The service wire has already been inserted into connector "B".

(b) Measure the resistance according to the value(s) in the table below.

Standard resistance

Tester connection	Condition	Specified condition
AD4-2 (+SR) - AD4-1 (-SR)	Always	Below 1 Ω

NG → **REPAIR OR REPLACE INSTRUMENT PANEL WIRE**

OK

REPAIR OR REPLACE ENGINE ROOM MAIN WIRE

9	CHECK INSTRUMENT PANEL WIRE (SHORT)

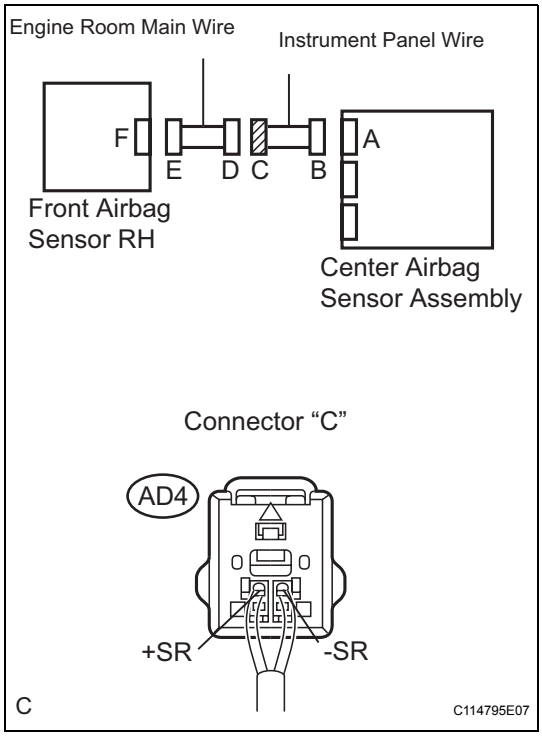

(a) Disconnect the instrument panel wire connector from the engine room main wire.
(b) Measure the resistance according to the value(s) in the table below.

Standard resistance

Tester connection	Condition	Specified condition
AD4-2 (+SR) - AD4-1 (-SR)	Always	1 MΩor higher

NG → **REPAIR OR REPLACE INSTRUMENT PANEL WIRE**

OK

REPAIR OR REPLACE ENGINE ROOM MAIN WIRE

10	CHECK INSTRUMENT PANEL WIRE (SHORT TO B+)

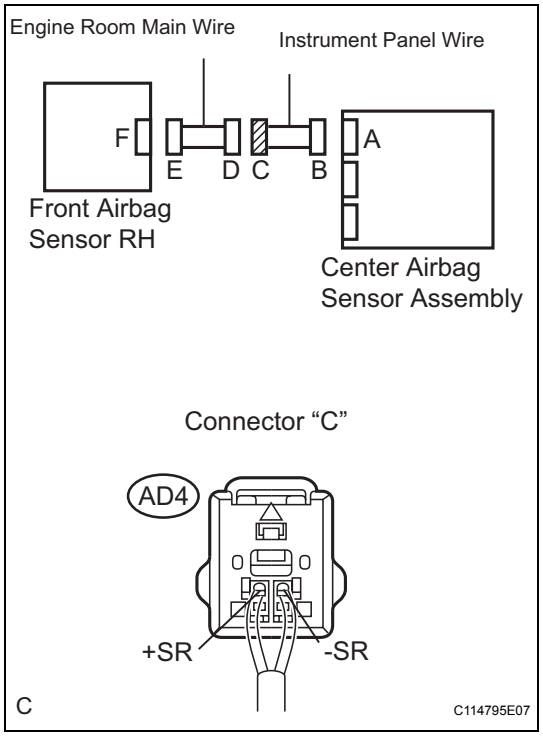

(a) Turn the ignition switch off.
(b) Disconnect the negative (-) terminal cable from the battery, and wait for at least 90 seconds.
(c) Disconnect the instrument panel wire connector from the engine room main wire.
(d) Connect the negative (-) terminal cable to the battery, and wait for at least 2 seconds.
(e) Turn the ignition switch on (IG).
(f) Measure the voltage according to the value(s) in the table below.

Standard voltage

Tester connection	Condition	Specified condition
AD4-2 (+SR) - Body ground	Ignition switch on (IG)	Below 1 V
AD4-1 (-SR) - Body ground	Ignition switch on (IG)	Below 1 V

NG → **REPAIR OR REPLACE INSTRUMENT PANEL WIRE**

OK

REPAIR OR REPLACE ENGINE ROOM MAIN WIRE

11	CHECK INSTRUMENT PANEL WIRE (SHORT TO GROUND)

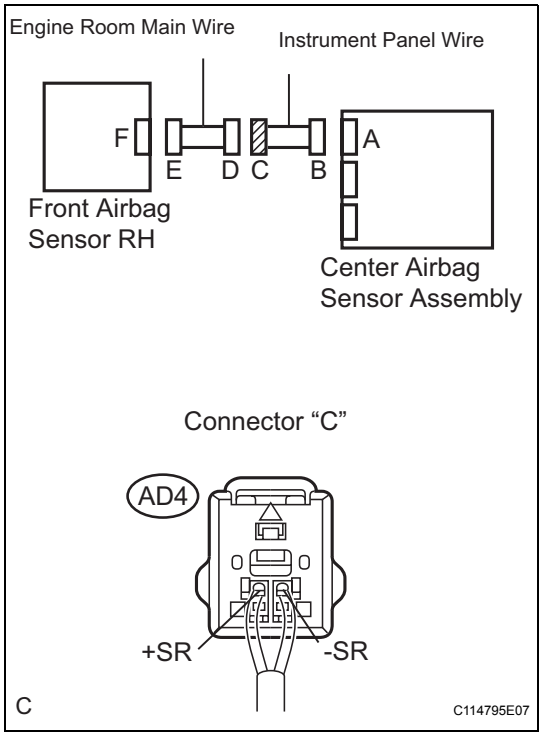

(a) Disconnect the instrument panel wire connector from the engine room main wire.
(b) Measure the resistance according to the value(s) in the table below.

Standard resistance

Tester connection	Condition	Specified condition
AD4-2 (+SR) - Body ground	Always	1 MΩ or higher
AD4-1 (-SR) - Body ground	Always	1 MΩ or higher

NG → **REPAIR OR REPLACE INSTRUMENT PANEL WIRE**

OK

REPAIR OR REPLACE ENGINE ROOM MAIN WIRE

DTC	B1615/14	Front Airbag Sensor LH Circuit Malfunction

DESCRIPTION

The front airbag sensor LH consists of the diagnostic circuit and the frontal deceleration sensor, etc.
If the center airbag sensor assembly receives signals from the frontal deceleration sensor, it determines whether or not the SRS should be activated.
DTC B1615/14 is recorded when a malfunction is detected in the front airbag sensor LH circuit.

DTC No.	DTC Detecting Condition	Trouble Area
B1615/14	• The center airbag sensor assembly receives a line short circuit signal, an open circuit signal, a short circuit to ground signal or a short circuit to B+ signal in the front airbag sensor LH circuit for 2 seconds. • Front airbag sensor LH malfunction • Center airbag sensor assembly malfunction	• Instrument panel wire • Engine room main wire • Front airbag sensor LH • Center airbag sensor assembly

WIRING DIAGRAM

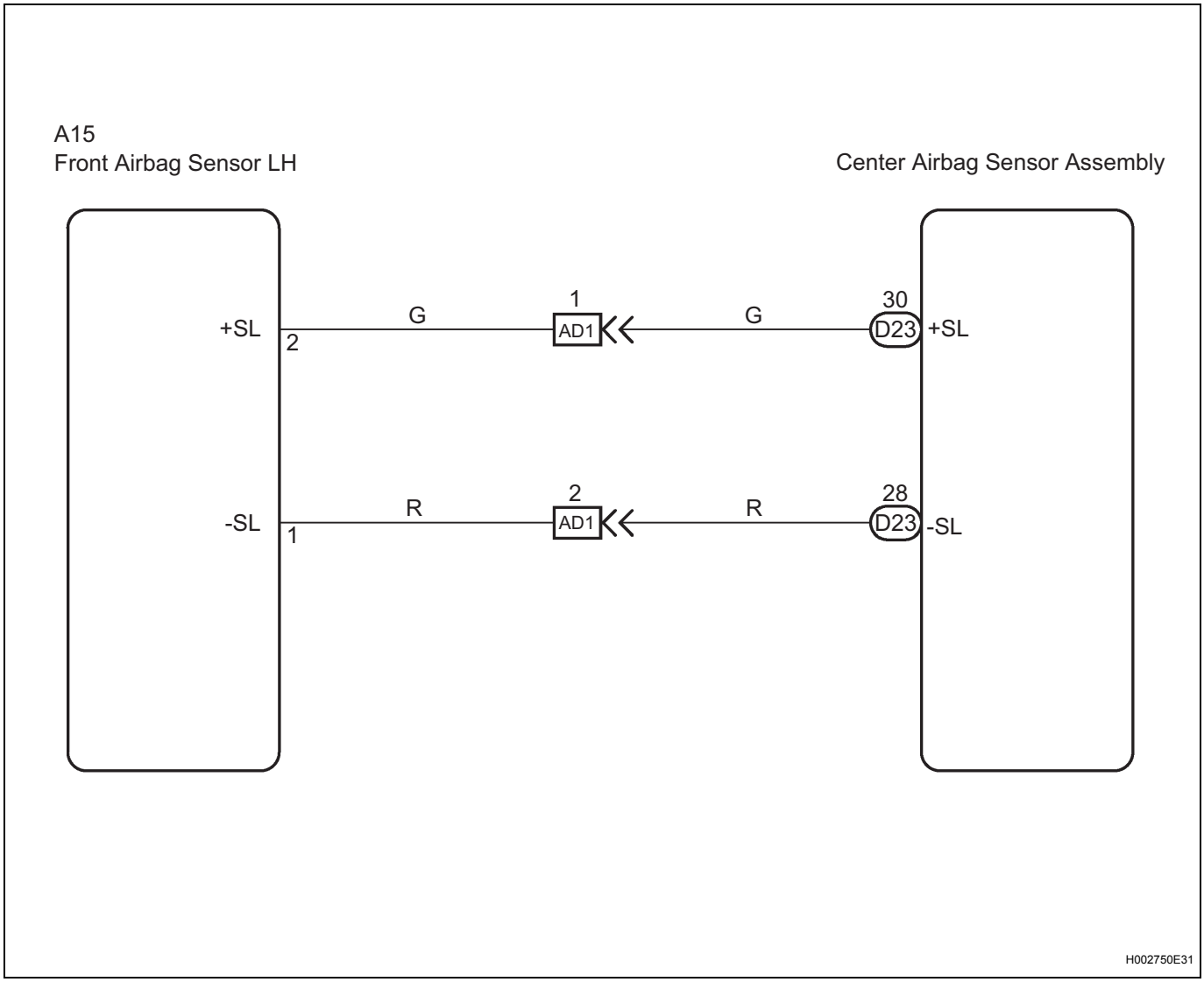

RS

INSPECTION PROCEDURE

1	CHECK DTC

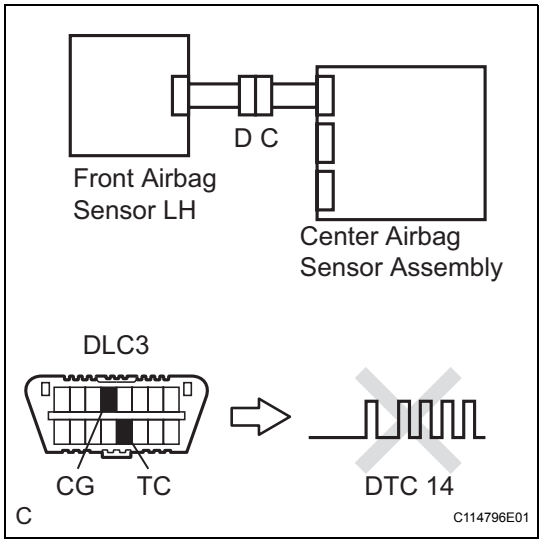

(a) Connect the connectors to the center airbag sensor assembly.
(b) Connect the negative (-) terminal cable to the battery, and wait for at least 2 seconds.
(c) Turn the ignition switch on (IG), and wait for at least 60 seconds.
(d) Clear the DTCs stored in memory (See page RS-34).
(e) Turn the ignition switch off.
(f) Turn the ignition switch on (IG), and wait for at least 60 seconds.
(g) Check the DTCs (See page RS-34).

OK:

DTC B1615/14 is not output.

HINT:

Codes other than DTC B1615/14 may be output at this time, but they are not related to this check.

NG	Go to step 2

OK

USE SIMULATION METHOD TO CHECK

2	CHECK CONNECTION OF CONNECTORS

(a) Turn the ignition switch off.
(b) Disconnect the negative (-) terminal cable from the battery, and wait for at least 90 seconds.
(c) Check that the connectors are properly connected to the center airbag sensor assembly and the front airbag sensor LH.

OK:

The connectors are properly connected.

NG	CONNECT CONNECTORS, THEN GO TO STEP 1

OK

3 CHECK FRONT AIRBAG SENSOR LH CIRCUIT (OPEN)

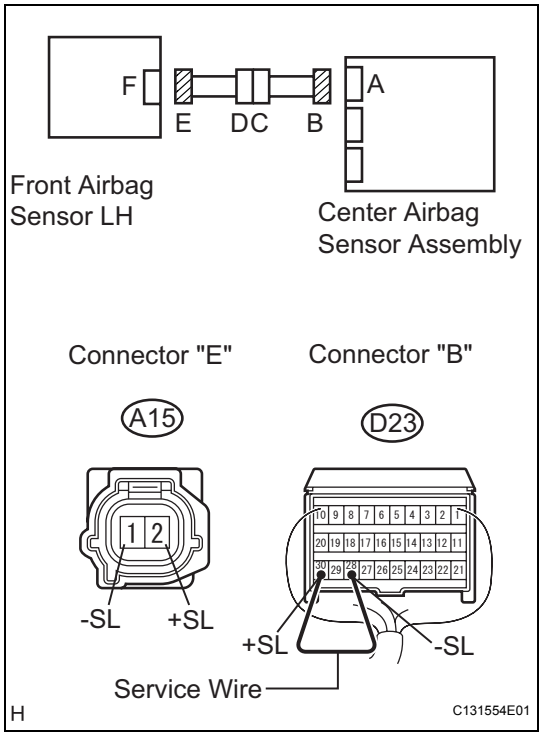

(a) Disconnect the connectors from the airbag sensor assembly center and the airbag sensor front LH.
(b) Using a service wire, connect D23-30 (+SL) and D23-28 (-SL) of connector "B".
NOTICE:
Do not forcibly insert a service wire into the terminals of the connector when connecting.
(c) Measure the resistance according to the value(s) in the table below.
Standard resistance

Tester connection	Condition	Specified condition
A15-2 (+SL) - A15-1 (-SL)	Always	Below 1 Ω

NG → **Go to step 8**

OK

4 CHECK FRONT AIRBAG SENSOR LH CIRCUIT (SHORT)

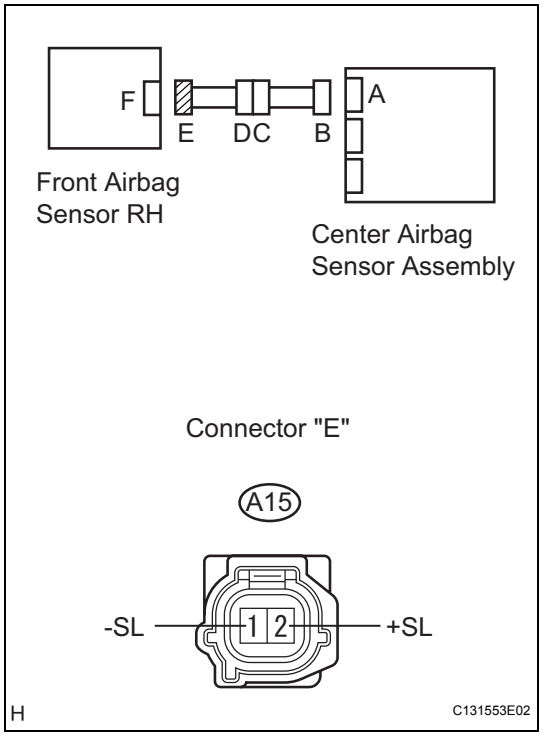

(a) Disconnect the service wire from connector "B".
(b) Measure the resistance according to the value(s) in the table below.
Standard resistance

Tester connection	Condition	Specified condition
A15-2 (+SL) - A15-1 (-SL)	Always	1 MΩ or higher

NG → **Go to step 9**

OK

RS

5 CHECK FRONT AIRBAG SENSOR LH CIRCUIT (SHORT TO B+)

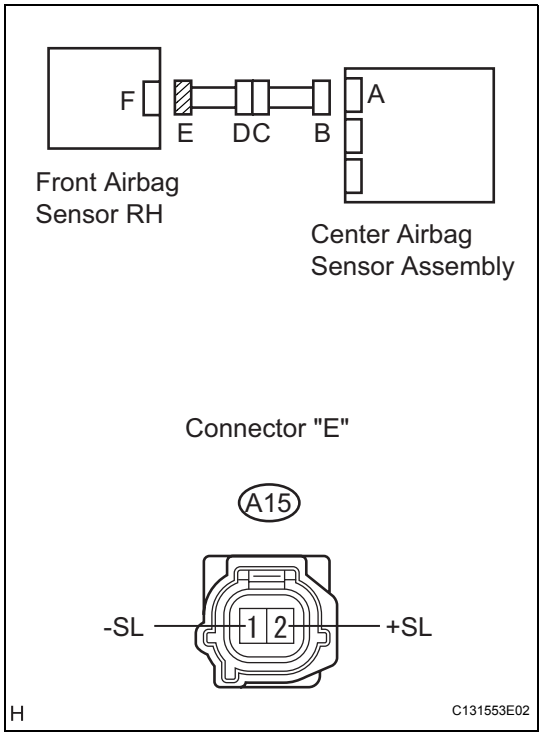

(a) Connect the negative (-) terminal cable to the battery, and wait for at least 2 seconds.
(b) Turn the ignition switch on (IG).
(c) Measure the voltage according to the value(s) in the table below.

Standard voltage

Tester connection	Condition	Specified condition
A15-2 (+SL) - Body ground	Ignition switch on (IG)	Below 1 V
A15-1 (-SL) - Body ground	Ignition switch on (IG)	Below 1 V

NG → **Go to step 10**

OK

6 CHECK FRONT AIRBAG SENSOR LH CIRCUIT (SHORT TO GROUND)

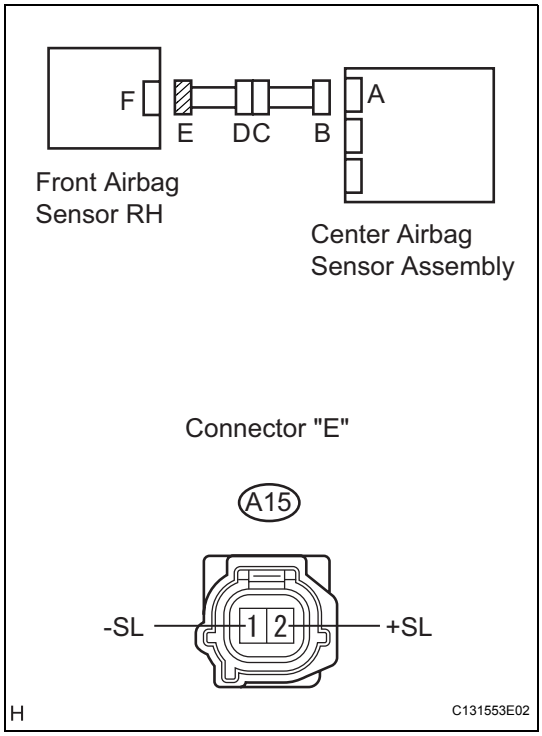

(a) Turn the ignition switch off.
(b) Disconnect the negative (-) terminal cable from the battery, and wait for at least 90 seconds.
(c) Measure the resistance according to the value(s) in the table below.

Standard resistance

Tester connection	Condition	Specified condition
A15-2 (+SL) - Body ground	Always	1 MΩ or higher
A15-1 (-SL) - Body ground	Always	1 MΩ or higher

NG → **Go to step 11**

OK

RS

7 CHECK FRONT AIRBAG SENSOR LH

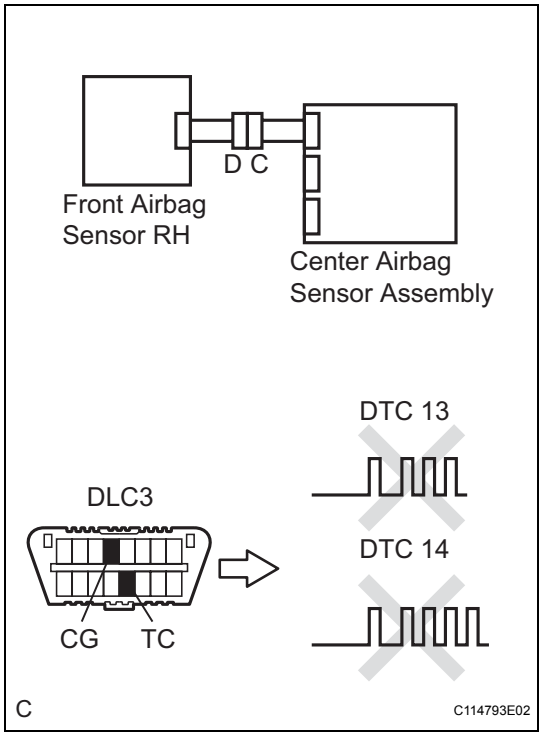

(a) Connect the connectors to the center airbag sensor assembly.
(b) Interchange the front airbag sensor RH with LH and connect the connectors to them.
(c) Connect the negative (-) terminal cable to the battery, and wait for at least 2 seconds.
(d) Turn the ignition switch on (IG), and wait for at least 60 seconds.
(e) Clear the DTCs stored in memory (See page RS-34).
(f) Turn the ignition switch off.
(g) Turn the ignition switch on (IG), and wait for at least 60 seconds.
(h) Check the DTCs (See page RS-34).

Result

Result	Proceed to
DTC B1615/14 is output.	A
DTC B1610/13 is output.	B
DTC B1610/13 and B1615/14 are not output.	C

HINT:
Codes other than DTC B1610/13 and B1615/14 may be output at this time, but they are not related to this check.

A → **REPLACE CENTER AIRBAG SENSOR ASSEMBLY**

B → **REPLACE FRONT AIRBAG SENSOR LH**

C

USE SIMULATION METHOD TO CHECK

8	CHECK INSTRUMENT PANEL WIRE (OPEN)

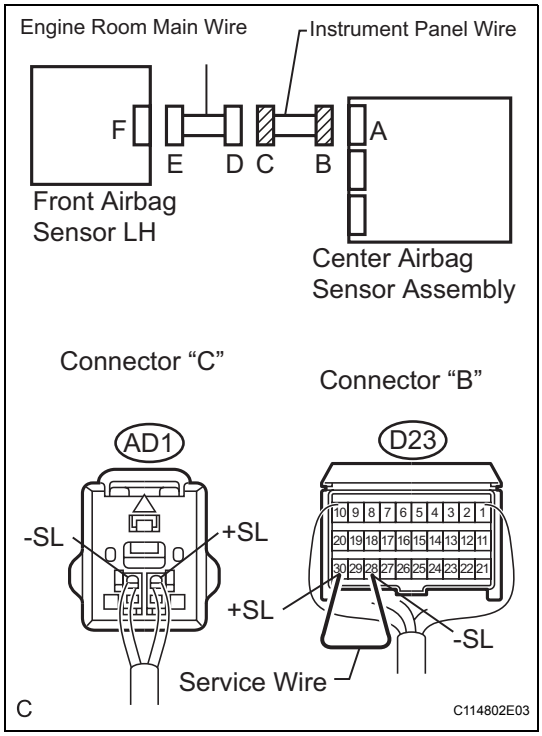

(a) Disconnect the instrument panel wire connector from the engine room main wire.
HINT:
The service wire has already been inserted into connector "B".

(b) Measure the resistance according to the value(s) in the table below.

Standard resistance

Tester connection	Condition	Specified condition
AD1-1 (+SL) - AD1-2 (-SL)	Always	Below 1 Ω

NG → **REPAIR OR REPLACE INSTRUMENT PANEL WIRE**

OK

REPAIR OR REPLACE ENGINE ROOM MAIN WIRE

9	CHECK INSTRUMENT PANEL WIRE (SHORT)

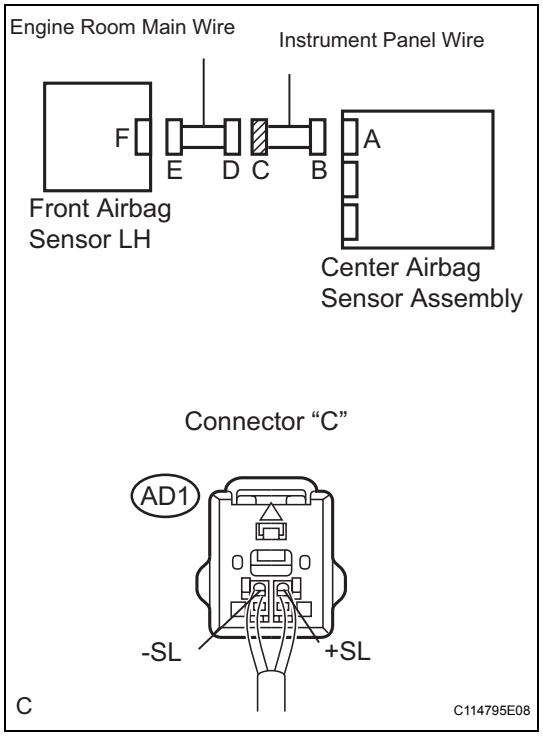

(a) Disconnect the instrument panel wire connector from the engine room main wire.
(b) Measure the resistance according to the value(s) in the table below.

Standard resistance

Tester connection	Condition	Specified condition
AD1-1 (+SL) - AD1-2 (-SL)	Always	1 MΩ or higher

NG → **REPAIR OR REPLACE INSTRUMENT PANEL WIRE**

OK

REPAIR OR REPLACE ENGINE ROOM MAIN WIRE

10	CHECK INSTRUMENT PANEL WIRE (SHORT TO B+)

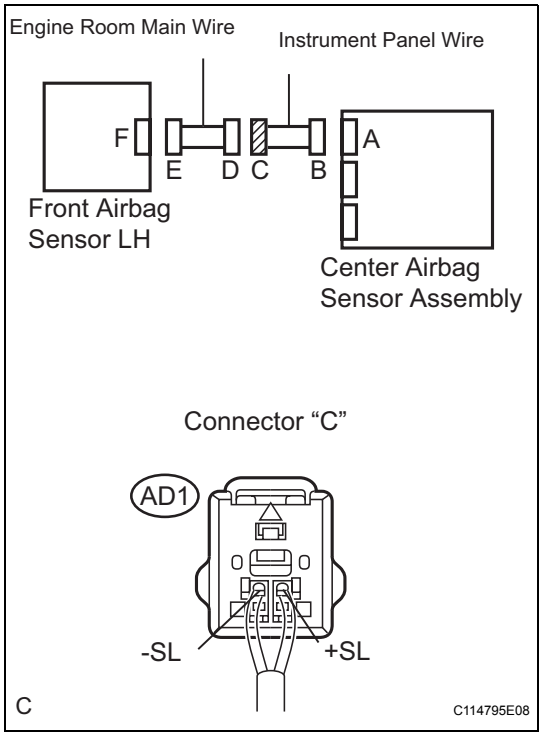

(a) Turn the ignition switch off.
(b) Disconnect the negative (-) terminal cable from the battery, and wait for at least 90 seconds.
(c) Disconnect the instrument panel wire connector from the engine room main wire.
(d) Connect the negative (-) terminal cable to the battery, and wait for at least 2 seconds.
(e) Turn the ignition switch on (IG).
(f) Measure the voltage according to the value(s) in the table below.

Standard voltage

Tester connection	Condition	Specified condition
AD1-1 (+SL) - Body ground	Ignition switch on (IG)	Below 1 V
AD1-2 (-SL) - Body ground	Ignition switch on (IG)	Below 1 V

NG → **REPAIR OR REPLACE INSTRUMENT PANEL WIRE**

OK

REPAIR OR REPLACE ENGINE ROOM MAIN WIRE

11	CHECK INSTRUMENT PANEL WIRE (SHORT TO GROUND)

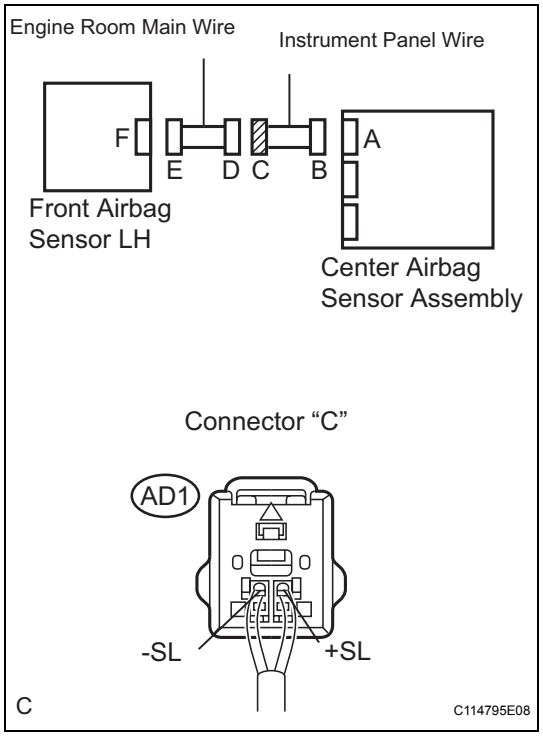

(a) Disconnect the instrument panel wire connector from the engine room main wire.
(b) Measure the resistance according to the value(s) in the table below.

Standard resistance

Tester connection	Condition	Specified condition
AD1-1 (+SL) - Body ground	Always	1 MΩ or higher
AD1-2 (-SL) - Body ground	Always	1 MΩ or higher

NG → **REPAIR OR REPLACE INSTRUMENT PANEL WIRE**

OK

REPAIR OR REPLACE ENGINE ROOM MAIN WIRE

DTC	B1620/21	Driver Side - Side Airbag Sensor Circuit Malfunction

DESCRIPTION

The side airbag sensor LH consists of the safing sensor, the diagnostic circuit, the lateral deceleration sensor, etc.
If the center airbag sensor assembly receives signals from the lateral deceleration sensor, it determines whether or not the SRS should be activated.
DTC B1620/21 is recorded when a malfunction is detected in the driver side - side airbag sensor circuit.

DTC No.	DTC Detecting Condition	Trouble Area
B1620/21	• The center airbag sensor assembly receives a line short circuit signal, an open circuit signal, a short circuit to ground signal or a short circuit to B+ signal in the driver side - side airbag sensor circuit for 2 seconds. • Side airbag sensor LH malfunction • Rear airbag sensor LH malfunction • Center airbag sensor assembly malfunction	• Floor wire • Side airbag sensor LH • Rear airbag sensor LH • Center airbag sensor assembly

WIRING DIAGRAM

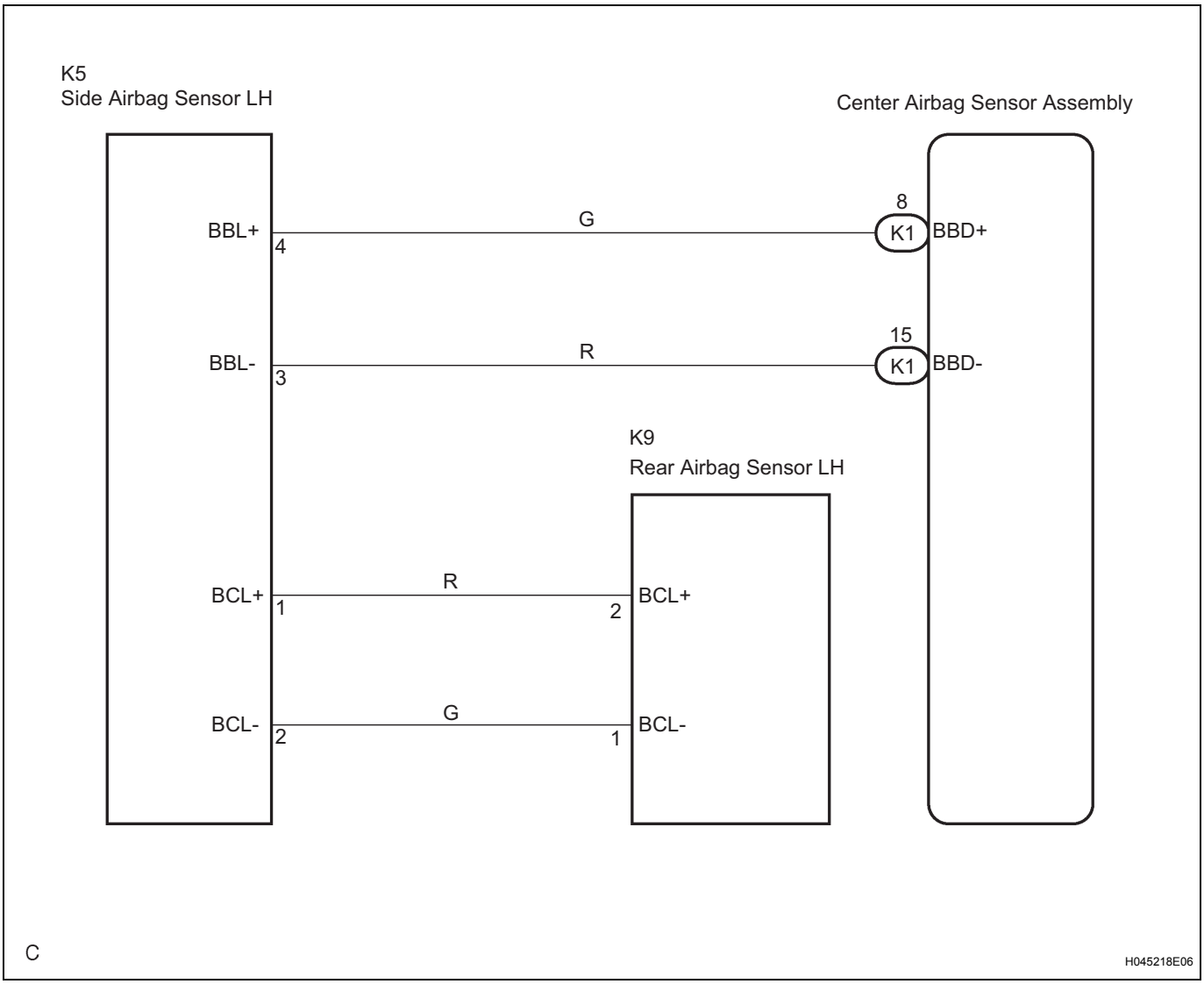

INSPECTION PROCEDURE

1	CHECK DTC

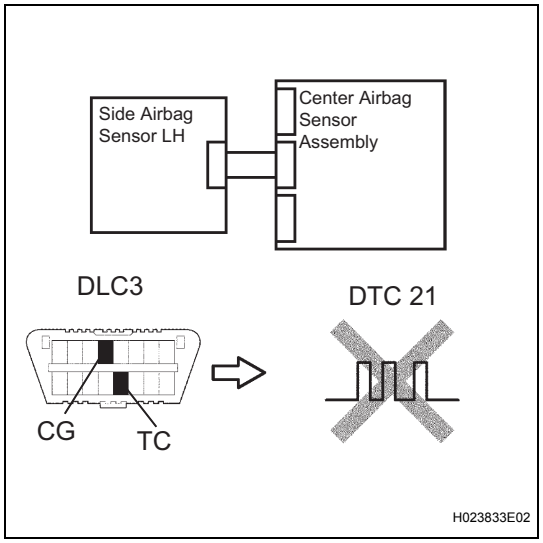

(a) Turn the ignition switch on (IG), and wait for at least 60 seconds.
(b) Clear the DTCs stored in memory (See page RS-34).
(c) Turn the ignition switch off.
(d) Turn the ignition switch on (IG), and wait for at least 60 seconds.
(e) Check the DTCs (See page RS-34).

OK:

DTC B1620/21 is not output.

HINT:

Codes other than DTC B1620/21 may be output at this time, but they are not related to this check.

NG → **Go to step 2**

OK

USE SIMULATION METHOD TO CHECK

2	CHECK CONNECTION OF CONNECTORS

(a) Turn the ignition switch off.
(b) Disconnect the negative (-) terminal cable from the battery, and wait for at least 90 seconds.
(c) Check that the connectors are properly connected to the center airbag sensor assembly and the side airbag sensor LH.

OK:

The connectors are connected.

NG → **CONNECT CONNECTORS, THEN GO TO STEP 1**

OK

3 CHECK FLOOR WIRE (OPEN)

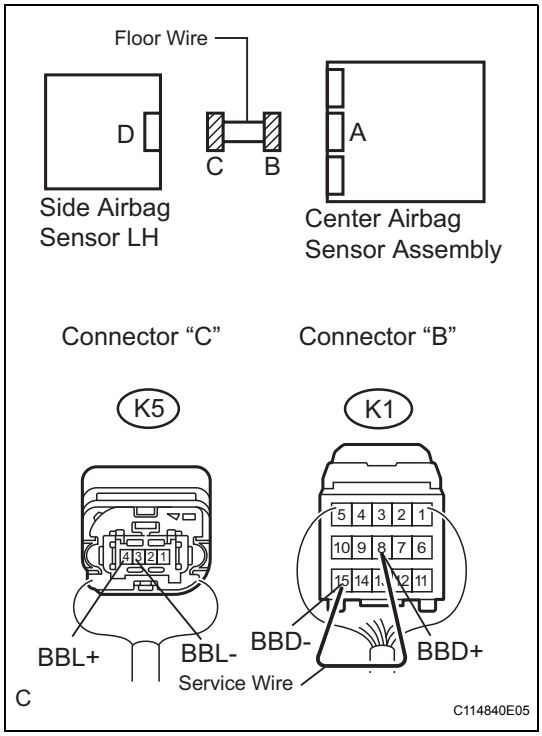

(a) Disconnect the connectors from the center airbag sensor assembly and the side airbag sensor LH.
(b) Using a service wire, connect K1-8 (BBD+) and K1-15 (BBD-) of connector "B".
NOTICE:
Do not forcibly insert a service wire into the terminals of the connector when connecting.
(c) Measure the resistance according to the value(s) in the table below.
Standard resistance

Tester connection	Condition	Specified condition
K5-4 (BBL+) - K5-3 (BBL-)	Always	Below 1 Ω

NG → REPAIR OR REPLACE FLOOR WIRE

OK

4 CHECK FLOOR WIRE (SHORT)

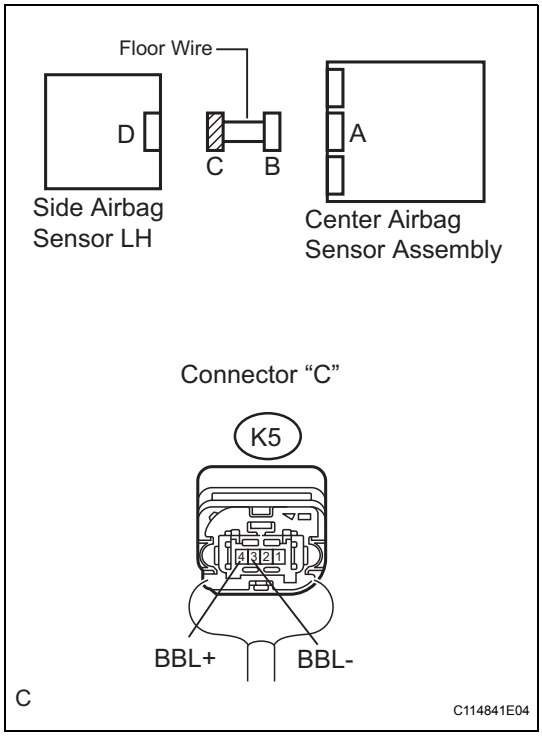

(a) Disconnect the service wire from connector "B".
(b) Measure the resistance according to the value(s) in the table below.
Standard resistance

Tester connection	Condition	Specified condition
K5-4 (BBL+) - K5-3 (BBL-)	Always	1 MΩ or higher

NG → REPAIR OR REPLACE FLOOR WIRE

OK

RS

5 CHECK FLOOR WIRE (SHORT TO B+)

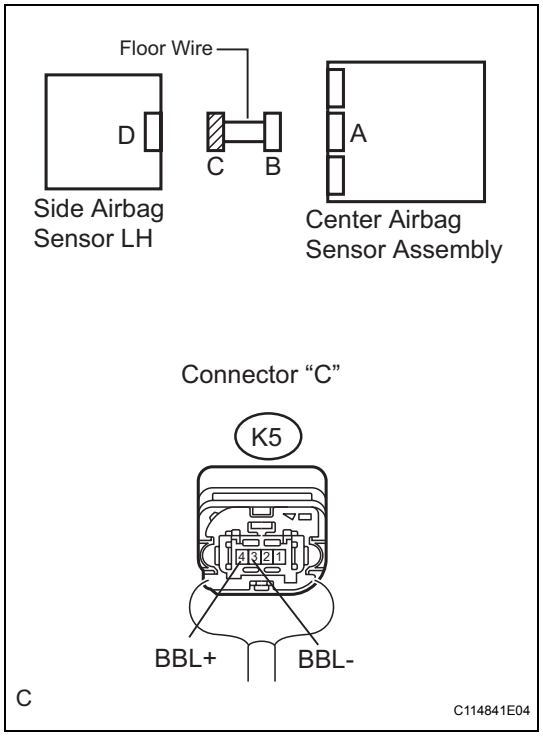

(a) Connect the negative (-) terminal cable to the battery, and wait for at least 2 seconds.
(b) Turn the ignition switch on (IG).
(c) Measure the voltage according to the value(s) in the table below.

Standard voltage

Tester connection	Condition	Specified condition
K5-4 (BBL+) - Body ground	Ignition switch on (IG)	Below 1 V
K5-3 (BBL-) - Body ground	Ignition switch on (IG)	Below 1 V

NG → REPAIR OR REPLACE FLOOR WIRE

OK

6 CHECK FLOOR WIRE (SHORT TO GROUND)

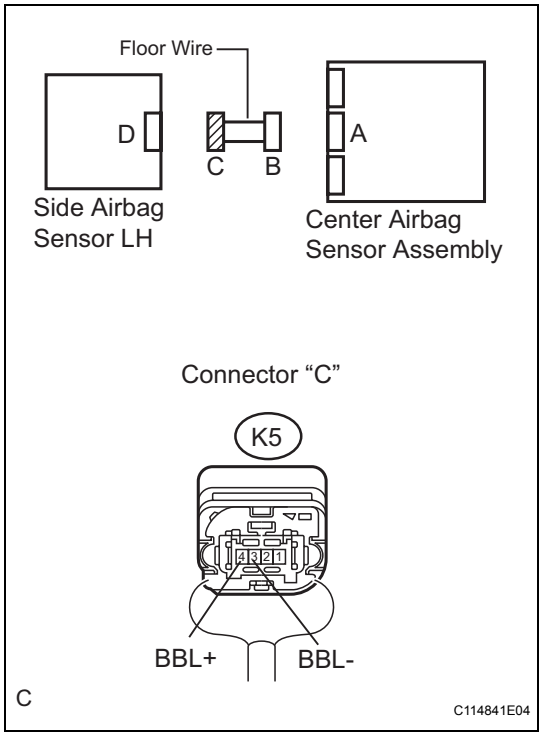

(a) Turn the ignition switch off.
(b) Disconnect the negative (-) terminal cable from the battery, and wait for at least 90 seconds.
(c) Measure the resistance according to the value(s) in the table below.

Standard resistance

Tester connection	Condition	Specified condition
K5-4 (BBD+) - Body ground	Always	1 MΩ or higher
K5-3 (BBD-) - Body ground	Always	1 MΩ or higher

NG → REPAIR OR REPLACE FLOOR WIRE

OK

7	CHECK SIDE AIRBAG SENSOR LH

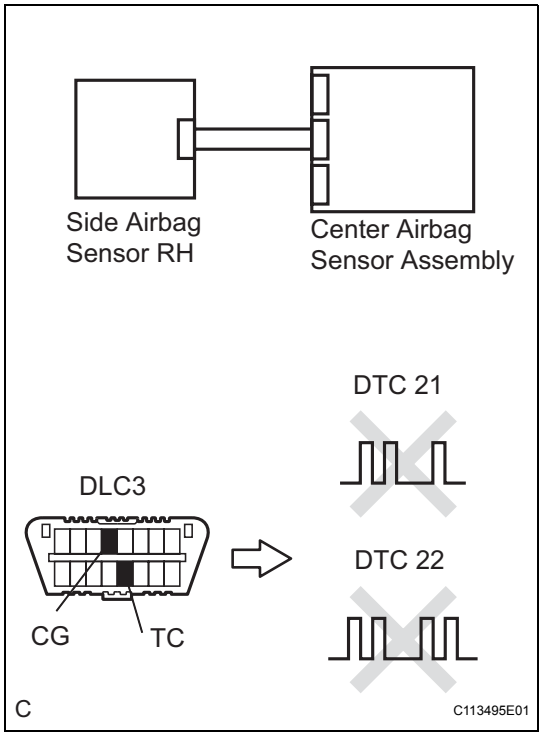

(a) Connect the connectors to the center airbag sensor assembly.
(b) Interchange the side airbag sensor RH with LH and connect the connectors to them.
(c) Connect the negative (-) terminal cable to the battery, and wait for at least 2 seconds.
(d) Turn the ignition switch on (IG), and wait for at least 60 seconds.
(e) Clear the DTCs stored in memory (See page RS-34).
(f) Turn the ignition switch off.
(g) Turn the ignition switch on (IG), and wait for at least 60 seconds.
(h) Check the DTCs (See page RS-34).

Result

Result	Proceed to
DTC B1620/21 is output.	A
DTC B1625/22 is output.	B
DTC B1620/21 and B1625/22 are not output.	C

A	Go to step 8
B	REPLACE SIDE AIRBAG SENSOR LH

C

USE SIMULATION METHOD TO CHECK

8 CHECK FLOOR WIRE (SHORT)

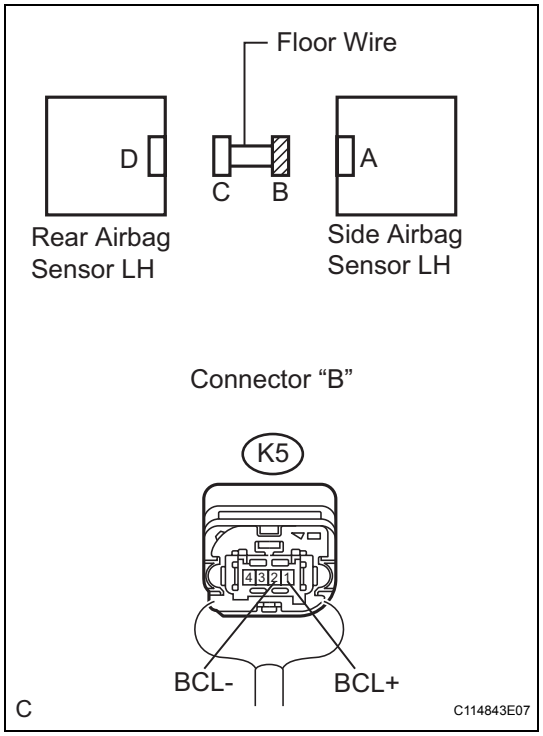

(a) Turn the ignition switch off.
(b) Disconnect the negative (-) terminal cable from the battery, and wait for at least 90 seconds.
(c) Return the side airbag sensor RH and LH to their original positions and connect the connectors to them.
(d) Disconnect the connectors from the side airbag sensor LH and rear airbag sensor LH.
(e) Measure the resistance according to the value(s) in the table below.

Standard resistance

Tester connection	Condition	Specified condition
K5-1 (BCL+) - K5-2 (BCL-)	Always	1 MΩ or higher

NG → REPAIR OR REPLACE FLOOR WIRE

OK

9 CHECK FLOOR WIRE (SHORT TO B+)

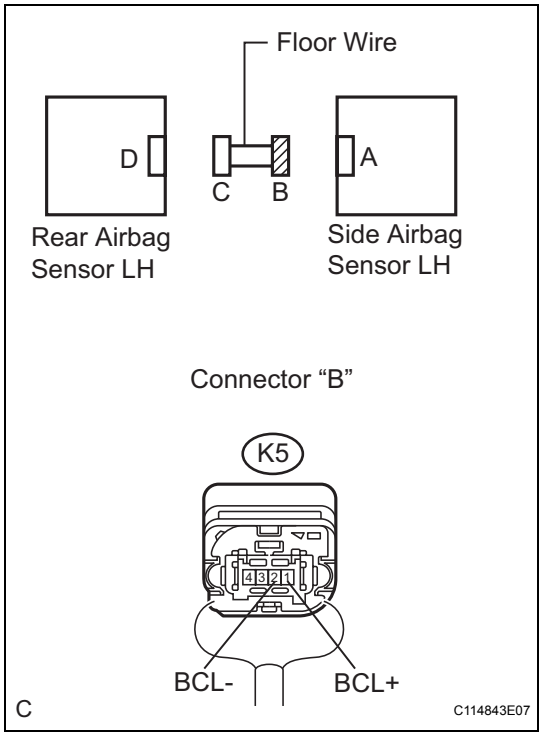

(a) Connect the negative (-) terminal cable to the battery, and wait for at least 2 seconds.
(b) Turn the ignition switch on (IG).
(c) Measure the voltage according to the value(s) in the table below.

Standard voltage

Tester connection	Condition	Specified condition
K5-1 (BCL+) - Body ground	Ignition switch on (IG)	Below 1 V
K5-2 (BCL-) - Body ground	Ignition switch on (IG)	Below 1 V

NG → REPAIR OR REPLACE FLOOR WIRE

OK

10 CHECK FLOOR WIRE (SHORT TO GROUND)

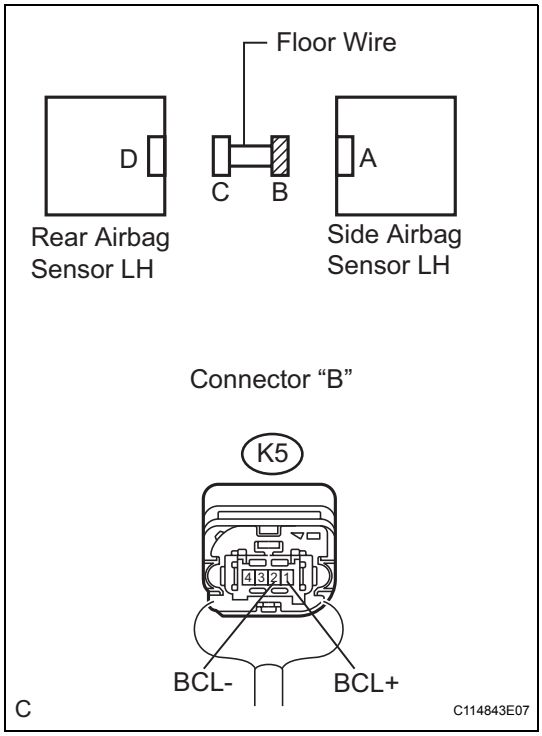

(a) Turn the ignition switch off.
(b) Disconnect the negative (-) terminal cable from the battery, and wait for at least 90 seconds.
(c) Measure the resistance according to the value(s) in the table below.

Standard resistance

Tester connection	Condition	Specified condition
K5-1 (BCL+) - Body ground	Always	1 MΩ or higher
K5-2 (BCL-) - Body ground	Always	1 MΩ or higher

NG → REPAIR OR REPLACE FLOOR WIRE

OK

11 CHECK REAR AIRBAG SENSOR LH

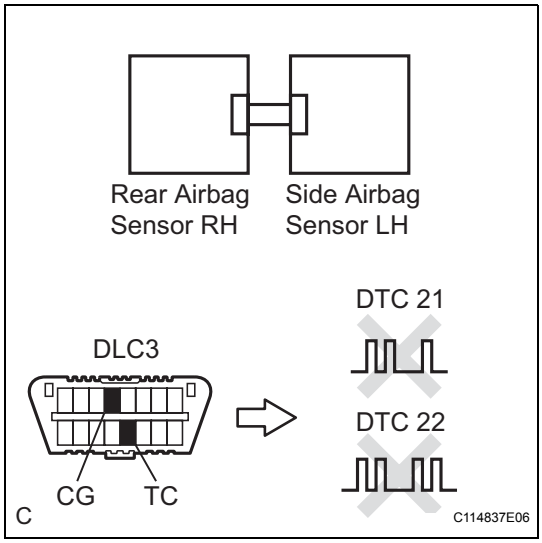

(a) Turn the ignition switch off.
(b) Disconnect the negative (-) terminal cable from the battery, and wait for at least 90 seconds.
(c) Connect the connector to the side airbag sensor LH.
(d) Interchange the rear airbag sensor LH with RH and connect the connectors to them.
(e) Connect the negative (-) terminal cable to the battery, and wait for at least 2 seconds.
(f) Turn the ignition switch on (IG), and wait for at least 60 seconds.
(g) Clear the DTCs stored in memory (See page RS-34).
(h) Turn the ignition switch off.
(i) Turn the ignition switch on (IG), and wait for at least 60 seconds.
(j) Check the DTCs (See page RS-34).

Result

Result	Proceed to
DTC B1620/21 is output.	A
DTC B1625/22 is output.	B
DTC B1620/21 and B1625/22 are not output.	C

HINT:
Codes other than DTC B1620/21 and B1625/22 may be output at this time, but they are not related to this check.

A → REPLACE CENTER AIRBAG SENSOR ASSEMBLY

B → REPLACE REAR AIRBAG SENSOR LH

C

USE SIMULATION METHOD TO CHECK

DTC	B1625/22	Front Passenger Side - Side Airbag Sensor Circuit Malfunction

DESCRIPTION

The side airbag sensor RH consists of the safing sensor, the diagnostic circuit, the lateral deceleration sensor, etc.
If the center airbag sensor assembly receives signals from the lateral deceleration sensor, it determines whether or not the SRS should be activated.
DTC B1625/22 is recorded when a malfunction is detected in the front passenger side - side airbag sensor circuit.

DTC No.	DTC Detecting Condition	Trouble Area
B1625/22	• The center airbag sensor assembly receives a line short circuit signal, an open circuit signal, a short circuit to ground signal or a short circuit to B+ signal in the front passenger side - side airbag sensor circuit for 2 seconds. • Side airbag sensor RH malfunction • Rear airbag sensor RH malfunction • Center airbag sensor assembly malfunction	• Floor wire No.2 • Side airbag sensor RH • Rear airbag sensor RH • Center airbag sensor assembly

WIRING DIAGRAM

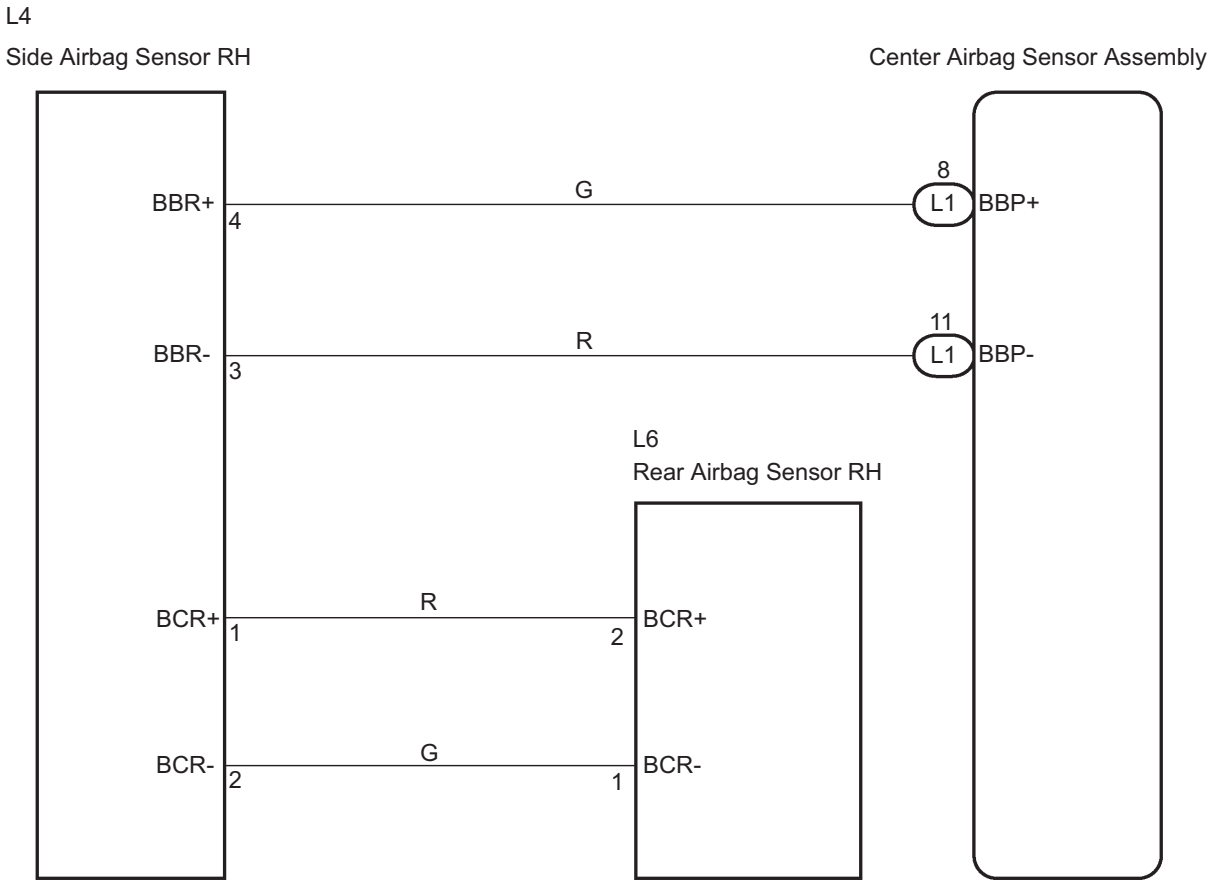

RS

C

H045218E07

INSPECTION PROCEDURE

1	CHECK DTC

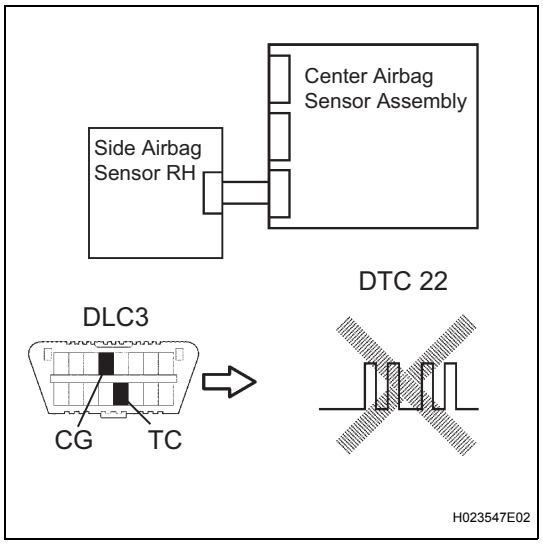

(a) Turn the ignition switch on (IG), and wait for at least 60 seconds.
(b) Clear the DTCs stored in memory (See page RS-34).
(c) Turn the ignition switch off.
(d) Turn the ignition switch on (IG), and wait for at least 60 seconds.
(e) Check the DTCs (See page RS-34).
OK:
DTC B1625/22 is not output.
HINT:
Codes other than DTC B1625/22 may be output at this time, but they are not related to this check.

NG → **Go to step 2**

OK

USE SIMULATION METHOD TO CHECK

2	CHECK CONNECTION OF CONNECTORS

(a) Turn the ignition switch off.
(b) Disconnect the negative (-) terminal cable from the battery, and wait for at least 90 seconds.
(c) Check that the connectors are properly connected to the center airbag sensor assembly and the side airbag sensor RH.
OK:
The connectors are connected.

NG → **CONNECT CONNECTORS, THEN GO TO STEP 1**

OK

3	CHECK FLOOR WIRE NO. 2 (OPEN)

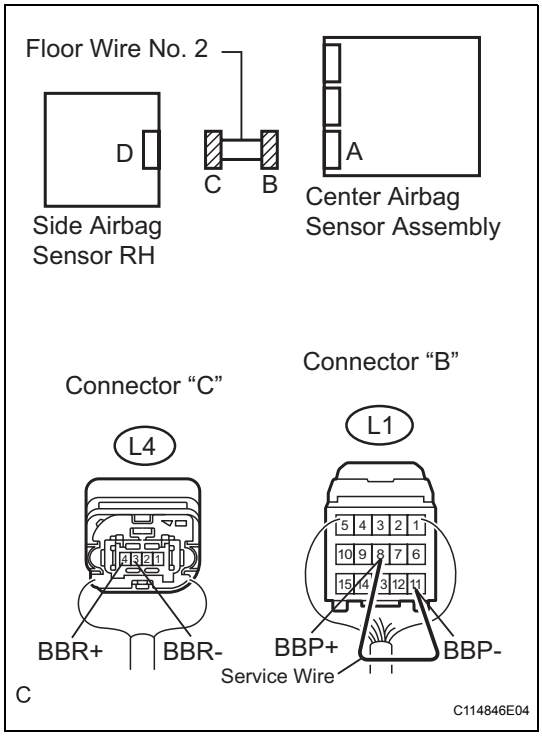

(a) Disconnect the connectors from the center airbag sensor assembly and the side airbag sensor RH.
(b) Using a service wire, connect L1-8 (BBP+) and L1-11 (BBP-) of connector "B".
NOTICE:
Do not forcibly insert a service wire into the terminals of the connector when connecting.
(c) Measure the resistance according to the value(s) in the table below.
Standard resistance

Tester connection	Condition	Specified condition
L4-4 (BBR+) - L4-3 (BBR-)	Always	Below 1 Ω

NG → **REPAIR OR REPLACE FLOOR WIRE NO. 2**

OK

4	CHECK FLOOR WIRE NO. 2 (SHORT)

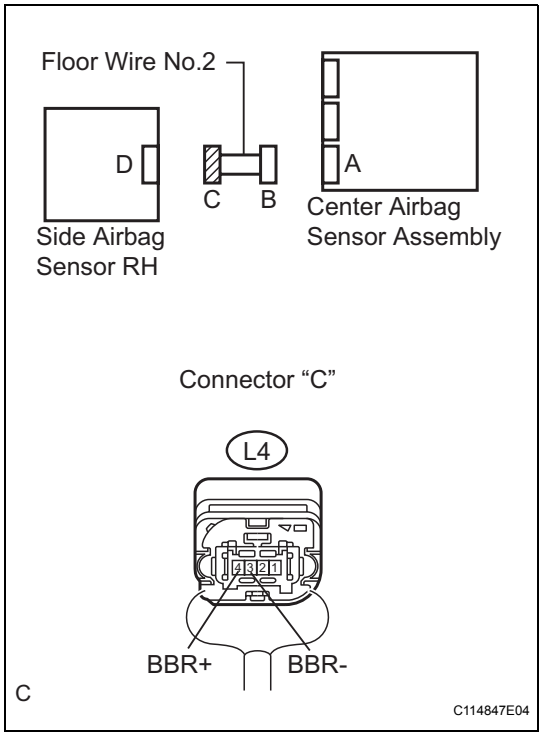

(a) Disconnect the service wire from connector "B".
(b) Measure the resistance according to the value(s) in the table below.
Standard resistance

Tester connection	Condition	Specified condition
L4-4 (BBR+) - L4-3 (BBR-)	Always	1 MΩ or higher

NG → **REPAIR OR REPLACE FLOOR WIRE NO. 2**

OK

RS

5 CHECK FLOOR WIRE NO. 2 (SHORT TO B+)

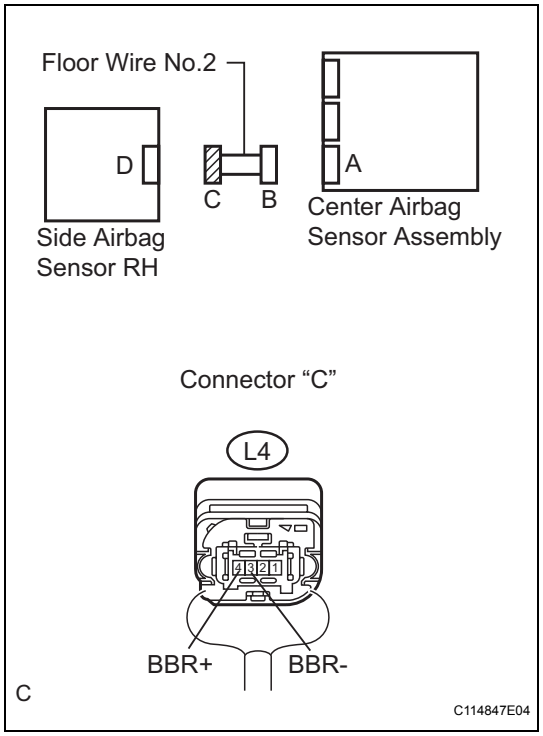

(a) Connect the negative (-) terminal cable to the battery, and wait for at least 2 seconds.
(b) Turn the ignition switch on (IG).
(c) Measure the voltage according to the value(s) in the table below.

Standard voltage

Tester connection	Condition	Specified condition
L4-4 (BBR+) - Body ground	Ignition switch on (IG)	Below 1 V
L4-3 (BBR-) - Body ground	Ignition switch on (IG)	Below 1 V

NG → REPAIR OR REPLACE FLOOR WIRE NO. 2

OK

6 CHECK FLOOR WIRE NO. 2 (SHORT TO GROUND)

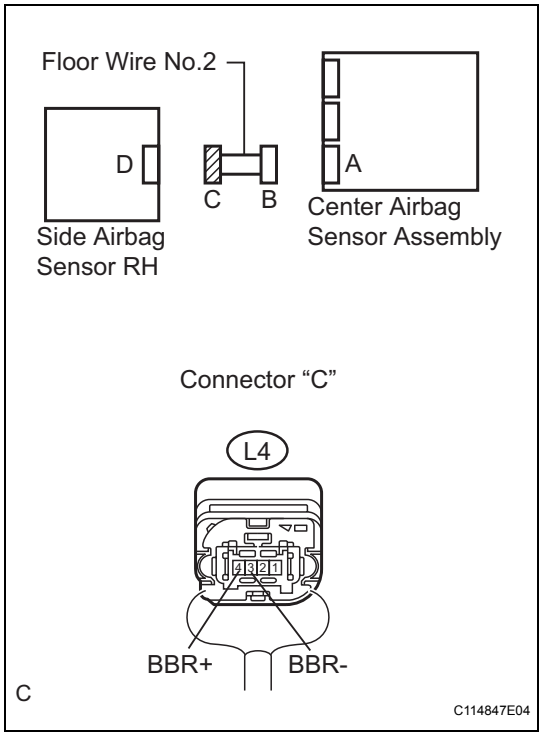

(a) Turn the ignition switch off.
(b) Disconnect the negative (-) terminal cable from the battery, and wait for at least 90 seconds.
(c) Measure the resistance according to the value(s) in the table below.

Standard resistance

Tester connection	Condition	Specified condition
L4-4 (BBR+) - Body ground	Always	1 MΩ or higher
L4-3 (BBR-) - Body ground	Always	1 MΩ or higher

NG → REPAIR OR REPLACE FLOOR WIRE NO. 2

OK

RS

7	CHECK SIDE AIRBAG SENSOR RH

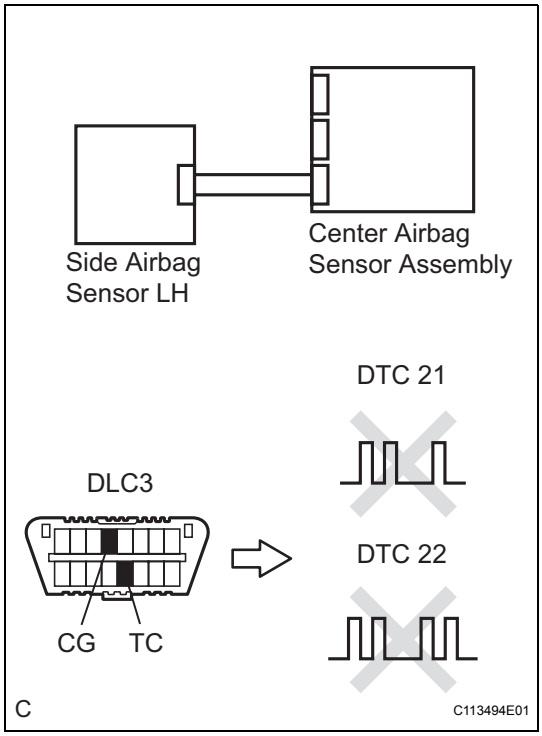

(a) Connect the connectors to the center airbag sensor assembly.
(b) Interchange the side airbag sensor RH with LH and connect the connectors to them.
(c) Connect the negative (-) terminal cable to the battery, and wait for at least 2 seconds.
(d) Turn the ignition switch on (IG), and wait for at least 60 seconds.
(e) Clear the DTCs stored in memory (See page RS-34).
(f) Turn the ignition switch off.
(g) Turn the ignition switch on (IG), and wait for at least 60 seconds.
(h) Check the DTCs (See page RS-34).

Result

Result	Proceed to
DTC B1625/22 is output.	A
DTC B1620/21 is output.	B
DTC B1620/21 and B1625/22 are not output.	C

A	Go to step 8
B	REPLACE SIDE AIRBAG SENSOR RH

C

USE SIMULATION METHOD TO CHECK

8 CHECK FLOOR WIRE NO. 2 (SHORT)

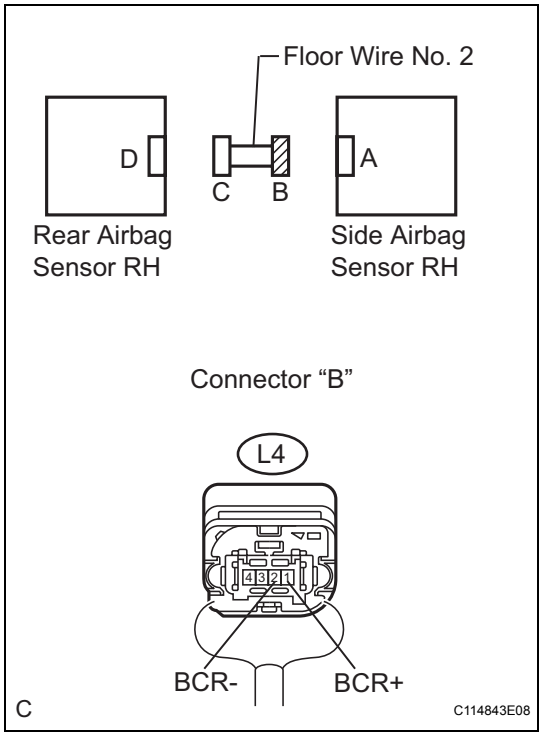

(a) Turn the ignition switch off.
(b) Disconnect the negative (-) terminal cable from the battery, and wait for at least 90 seconds.
(c) Return the side airbag sensor LH and RH to their original positions and connect the connectors to them.
(d) Disconnect the connectors from the side airbag sensor RH and rear airbag sensor RH.
(e) Measure the resistance according to the value(s) in the table below.

Standard resistance

Tester connection	Condition	Specified condition
L4-1 (BCR+) - L4-2 (BCR-)	Always	1 MΩ or higher

NG → **REPAIR OR REPLACE FLOOR WIRE NO. 2**

OK

9 CHECK FLOOR WIRE NO. 2 (SHORT TO B+)

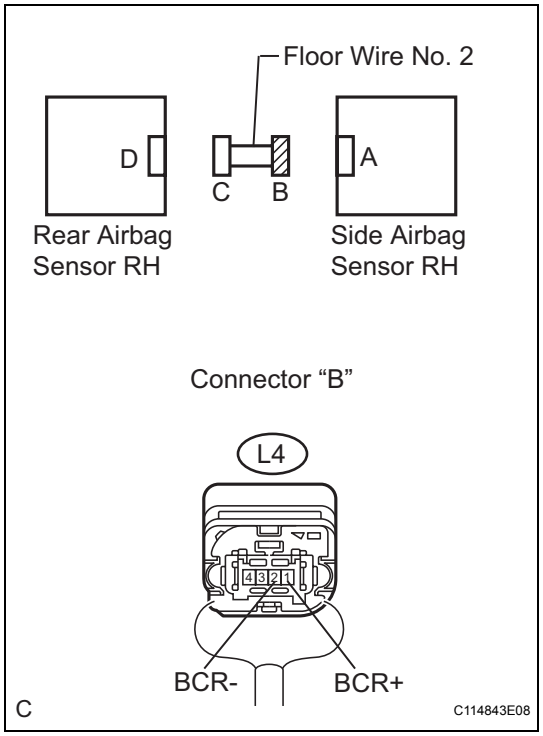

(a) Connect the negative (-) terminal cable to the battery, and wait for at least 2 seconds.
(b) Turn the ignition switch on (IG).
(c) Measure the voltage according to the value(s) in the table below.

Standard voltage

Tester connection	Condition	Specified condition
L4-1 (BCR+) - Body ground	Ignition switch on (IG)	Below 1 V
L4-2 (BCR-) - Body ground	Ignition switch on (IG)	Below 1 V

NG → **REPAIR OR REPLACE FLOOR WIRE NO. 2**

OK

10 CHECK FLOOR WIRE NO. 2 (SHORT TO GROUND)

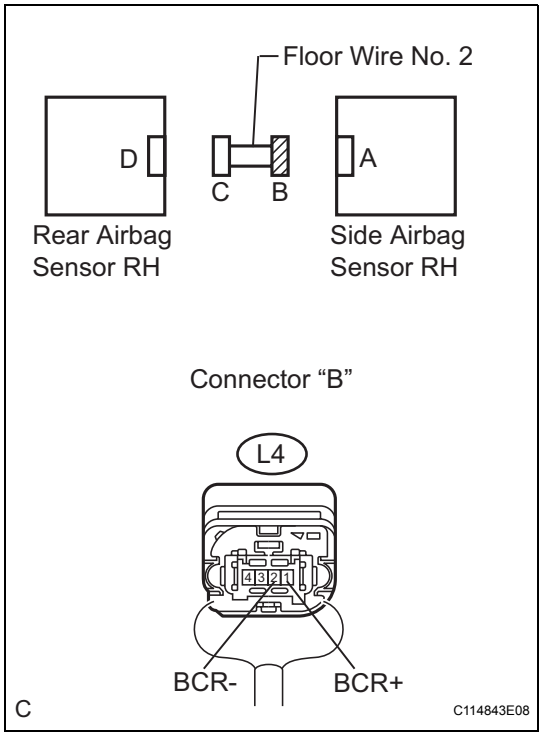

(a) Turn the ignition switch off.
(b) Disconnect the negative (-) terminal cable from the battery, and wait for at least 90 seconds.
(c) Measure the resistance according to the value(s) in the table below.

Standard resistance

Tester connection	Condition	Specified condition
L4-1 (BCR+) - Body ground	Always	1 MΩ or higher
L4-2 (BCR-) - Body ground	Always	1 MΩ or higher

NG → REPAIR OR REPLACE FLOOR WIRE NO. 2

OK

11 CHECK REAR AIRBAG SENSOR RH

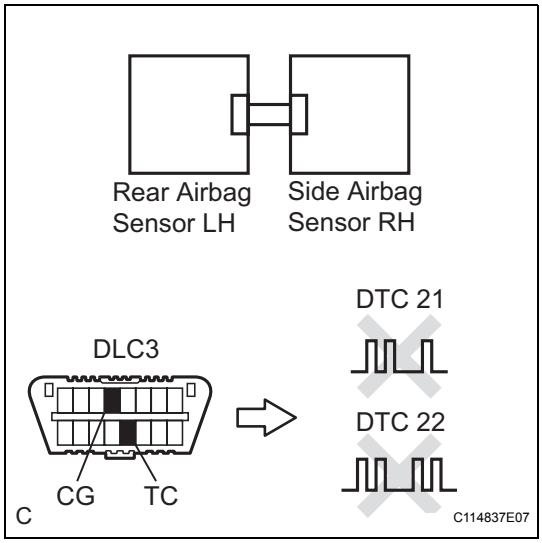

(a) Turn the ignition switch off.
(b) Disconnect the negative (-) terminal cable from the battery, and wait for at least 90 seconds.
(c) Connect the connector to the side airbag sensor RH.
(d) Interchange the rear airbag sensor RH with LH and connect the connectors to them.
(e) Connect the negative (-) terminal cable to the battery, and wait for at least 2 seconds.
(f) Turn the ignition switch on (IG), and wait for at least 60 seconds.
(g) Clear the DTCs stored in memory (See page RS-34).
(h) Turn the ignition switch off.
(i) Turn the ignition switch on (IG), and wait for at least 60 seconds.
(j) Check the DTCs (See page RS-34).

Result

Result	Proceed to
DTC B1625/22 is output.	A
DTC B1620/21 is output.	B
DTC B1620/21 and B1625/22 are not output.	C

HINT:
Codes other than DTC B1620/21 and B1625/22 may be output at this time, but they are not related to this check.

A → REPLACE CENTER AIRBAG SENSOR ASSEMBLY

B → REPLACE REAR AIRBAG SENSOR RH

C

USE SIMULATION METHOD TO CHECK

DTC	B1630/23	Driver Side Rear Airbag Sensor Circuit Malfunction

DESCRIPTION

The rear airbag sensor LH consists of the safing sensor, the diagnostic circuit, the lateral deceleration sensor, etc.
If the center airbag sensor assembly receives signals from the lateral deceleration sensor, it determines whether or not the SRS should be activated.
DTC B1630/23 is recorded when a malfunction is detected in the driver side rear airbag sensor circuit.

DTC No.	DTC Detecting Condition	Trouble Area
B1630/23	• The center airbag sensor assembly receives an open circuit signal in the driver side rear airbag sensor circuit for 2 seconds. • Rear airbag sensor LH malfunction • Side airbag sensor LH malfunction • Center airbag sensor assembly malfunction	• Floor wire • Rear airbag sensor LH • Side airbag sensor LH • Center airbag sensor assembly

HINT:
Troubleshoot DTC B1620/21 first when the DTC B1620/21 and B1630/23 are output simultaneously.

WIRING DIAGRAM

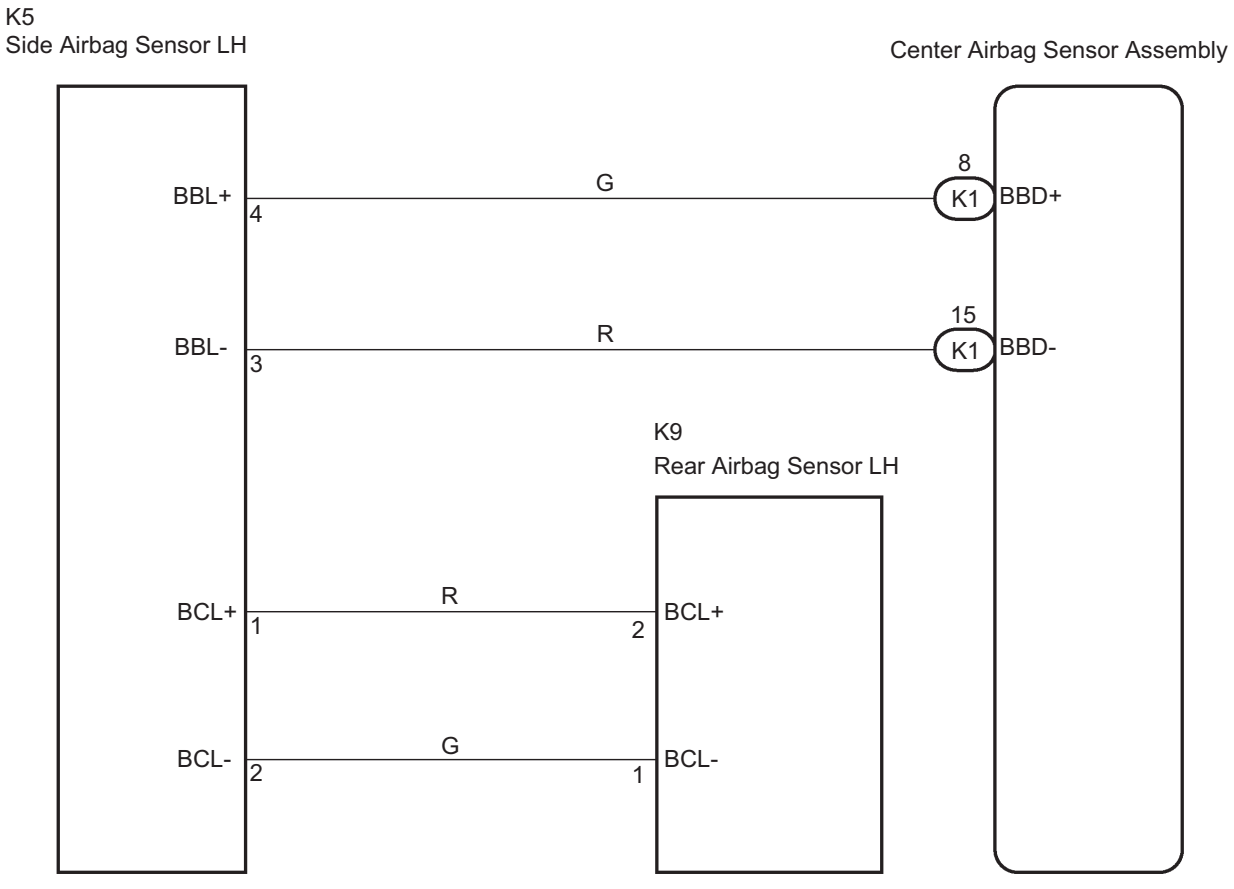

RS

C

H045218E06

INSPECTION PROCEDURE

1	CHECK DTC

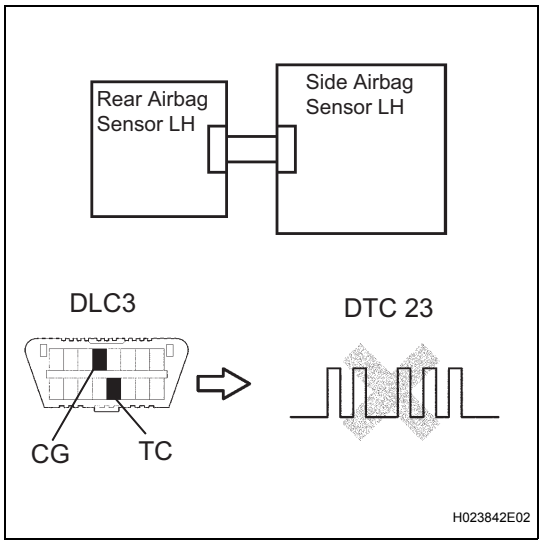

(a) Turn the ignition switch on (IG), and wait for at least 60 seconds.
(b) Clear the DTCs stored in memory (See page RS-34).
(c) Turn the ignition switch off.
(d) Turn the ignition switch on (IG), and wait for at least 60 seconds.
(e) Check the DTCs (See page RS-34).
OK:
DTC B1630/23 is not output.

NG → **Go to step 2**

OK

USE SIMULATION METHOD TO CHECK

2	CHECK CONNECTION OF CONNECTORS

(a) Turn the ignition switch off.
(b) Disconnect the negative (-) terminal cable from the battery, and wait for at least 90 seconds.
(c) Check that the connectors are properly connected to the side airbag sensor LH and the rear airbag sensor LH.
OK:
The connectors are connected.

NG → **CONNECT CONNECTORS, THEN GO TO STEP 1**

OK

3 CHECK FLOOR WIRE (OPEN)

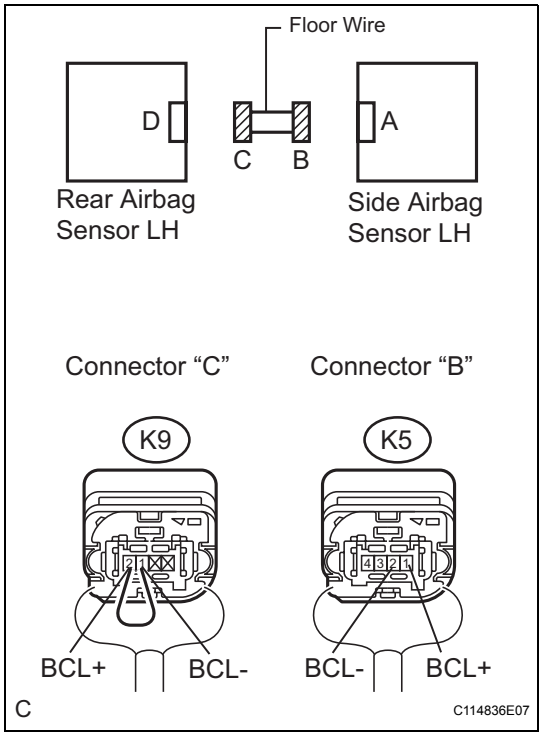

(a) Disconnect the connectors from the side airbag sensor LH and the rear airbag sensor LH.
(b) Using a service wire, connect K5-1 (BCL+) and K5-2 (BCL-) of connector "B".
NOTICE:
Do not forcibly insert a service wire into the terminals of the connector when connecting.
(c) Measure the resistance according to the value(s) in the table below.
Standard resistance

Tester connection	Condition	Specified condition
K9-2 (BCL+) - K9-1 (BCL-)	Always	Below 1 Ω

NG → **REPAIR OR REPLACE FLOOR WIRE**

OK

4 CHECK REAR AIRBAG SENSOR LH

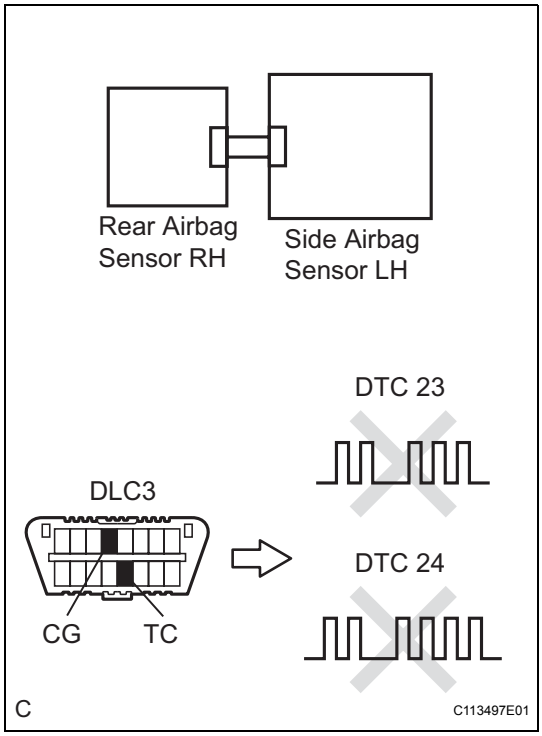

(a) Disconnect the service wire from connector "B".
(b) Connect the connectors to the side airbag sensor LH.
(c) Interchange the rear airbag sensor LH with RH and connect the connectors to them.
(d) Connect the negative (-) terminal cable to the battery, and wait for at least 2 seconds.
(e) Turn the ignition switch on (IG), and wait for at least 60 seconds.
(f) Clear the DTCs stored in memory (See page RS-34).
(g) Turn the ignition switch off.
(h) Turn the ignition switch on (IG), and wait for at least 60 seconds.
(i) Check the DTCs (See page RS-34).
Result

Result	Proceed to
DTC B1630/23 is output.	A
DTC B1635/24 is output.	B
DTC B1630/23 and B1635/24 are not output.	C

HINT:
Codes other than DTC B1630/23 and B1635/24 may be output at this time, but they are not related to this check.

A → **Go to step 5**

RS

B → REPLACE REAR AIRBAG SENSOR LH

C

USE SIMULATION METHOD TO CHECK

5 CHECK SIDE AIRBAG SENSOR LH

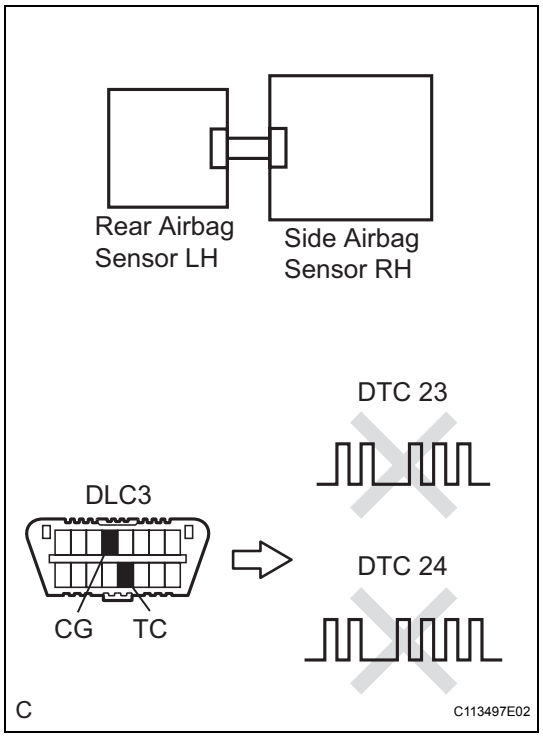

(a) Turn the ignition switch off.
(b) Disconnect the negative (-) terminal cable from the battery, and wait for at least 90 seconds.
(c) Return the rear airbag sensor RH and LH to their original positions and connect the connectors to them.
(d) Interchange the side airbag sensor LH with RH and connect the connectors to them.
(e) Connect the negative (-) terminal cable to the battery, and wait for at least 2 seconds.
(f) Turn the ignition switch on (IG), and wait for at least 60 seconds.
(g) Clear the DTCs stored in memory (See page RS-34).
(h) Turn the ignition switch off.
(i) Turn the ignition switch on (IG), and wait for at least 60 seconds.
(j) Check the DTCs (See page RS-34).

Result

Result	Proceed to
DTC B1630/23 is output.	A
DTC B1635/24 is output.	B
DTC B1630/23 and B1635/24 are not output.	C

HINT:
Codes other than DTC B1630/23 and B1635/24 may be output at this time, but they are not related to this check.

A → REPLACE CENTER AIRBAG SENSOR ASSEMBLY

B → REPLACE SIDE AIRBAG SENSOR LH

C

USE SIMULATION METHOD TO CHECK

DTC	B1635/24	Front Passenger Side Rear Airbag Sensor Circuit Malfunction

DESCRIPTION

The rear airbag sensor RH consists of the safing sensor, the diagnostic circuit, the lateral deceleration sensor, etc.

If the center airbag sensor assembly receives signals from the lateral deceleration sensor, it determines whether or not the SRS should be activated.

DTC B1635/24 is recorded when a malfunction is detected in the front passenger side rear airbag sensor circuit.

DTC No.	DTC Detecting Condition	Trouble Area
B1635/24	• The center airbag sensor assembly receives an open circuit signal in the front passenger side rear airbag sensor circuit for 2 seconds. • Rear airbag sensor RH malfunction • Side airbag sensor RH malfunction • Center airbag sensor assembly malfunction	• Floor wire No.2 • Rear airbag sensor RH • Side airbag sensor RH • Center airbag sensor assembly

HINT:

Troubleshoot DTC B1625/22 first when the DTC B1625/22 and B1635/24 are output simultaneously.

WIRING DIAGRAM

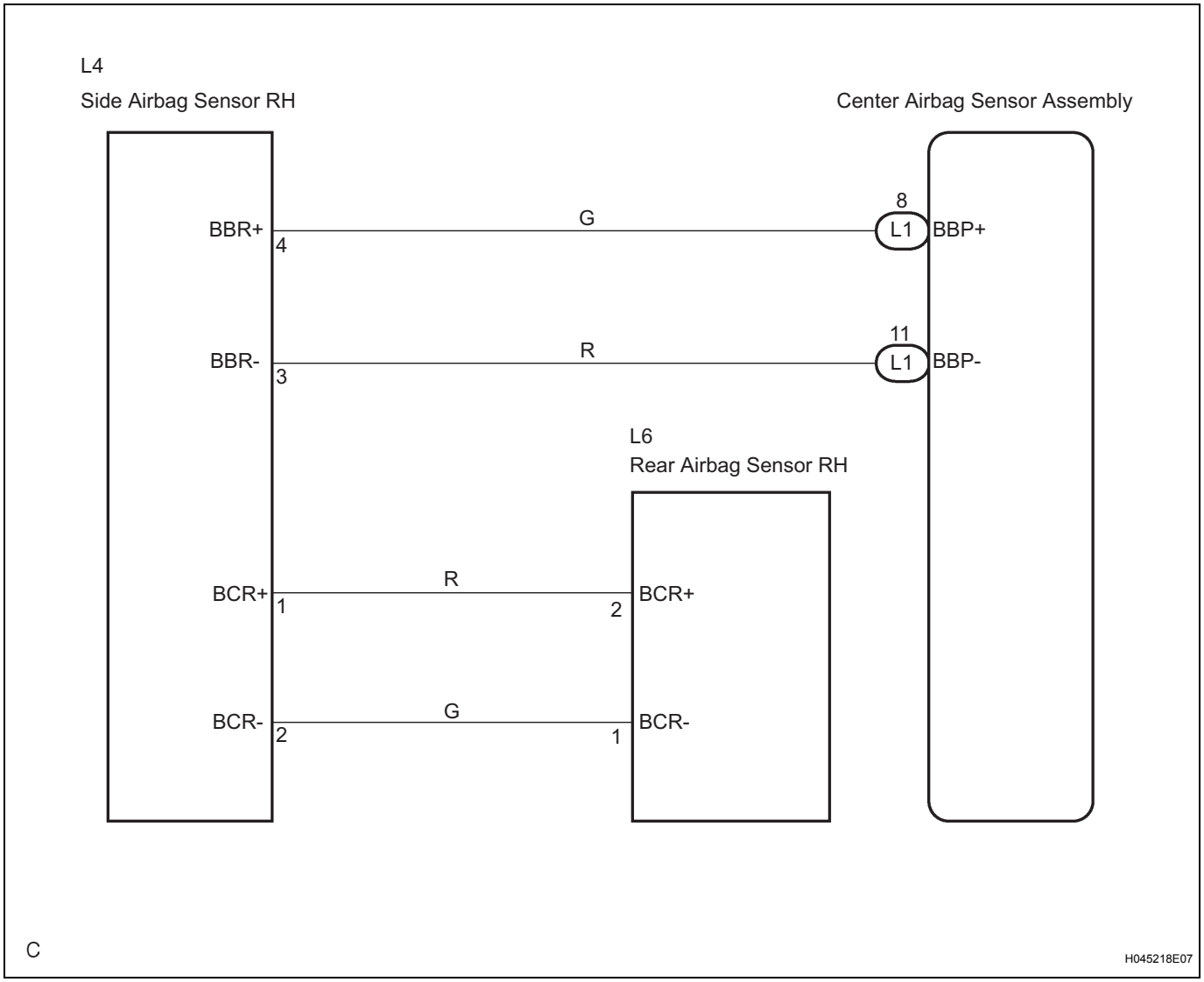

INSPECTION PROCEDURE

1	CHECK DTC

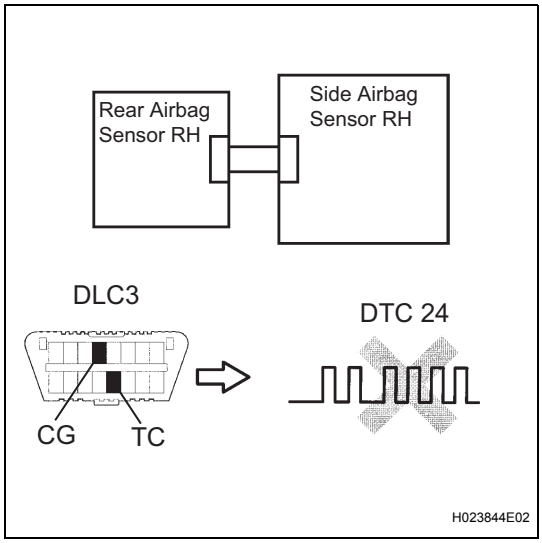

(a) Turn the ignition switch on (IG), and wait for at least 60 seconds.
(b) Clear the DTCs stored in memory (See page RS-34).
(c) Turn the ignition switch off.
(d) Turn the ignition switch on (IG), and wait for at least 60 seconds.
(e) Check the DTCs (See page RS-34).
OK:
DTC B1635/24 is not output.

NG	Go to step 2

OK

USE SIMULATION METHOD TO CHECK

2	CHECK CONNECTION OF CONNECTORS

(a) Turn the ignition switch off.
(b) Disconnect the negative (-) terminal cable from the battery, and wait for at least 90 seconds.
(c) Check that the connectors are properly connected to the side airbag sensor RH and the rear airbag sensor RH.
OK:
The connectors are connected.

NG	CONNECT CONNECTORS, THEN GO TO STEP 1

OK

3 CHECK FLOOR WIRE NO. 2 (OPEN)

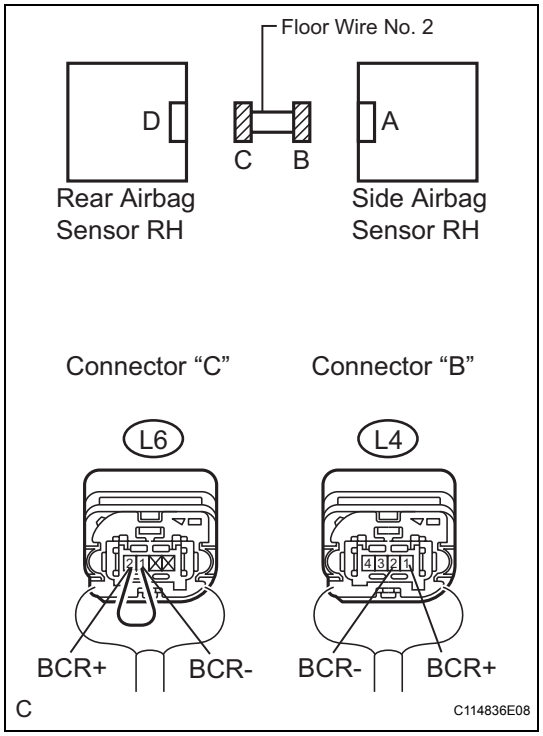

(a) Disconnect the connectors from the side airbag sensor RH and the rear airbag sensor RH.
(b) Using a service wire, connect L4-1 (BCR+) and L4-2 (BCR-) of connector "B".
NOTICE:
Do not forcibly insert a service wire into the terminals of the connector when connecting.
(c) Measure the resistance according to the value(s) in the table below.
Standard resistance

Tester connection	Condition	Specified condition
L6-2 (BCR+) - L6-1 (BCR-)	Always	Below 1 Ω

NG → **REPAIR OR REPLACE FLOOR WIRE NO. 2**

OK

4 CHECK REAR AIRBAG SENSOR RH

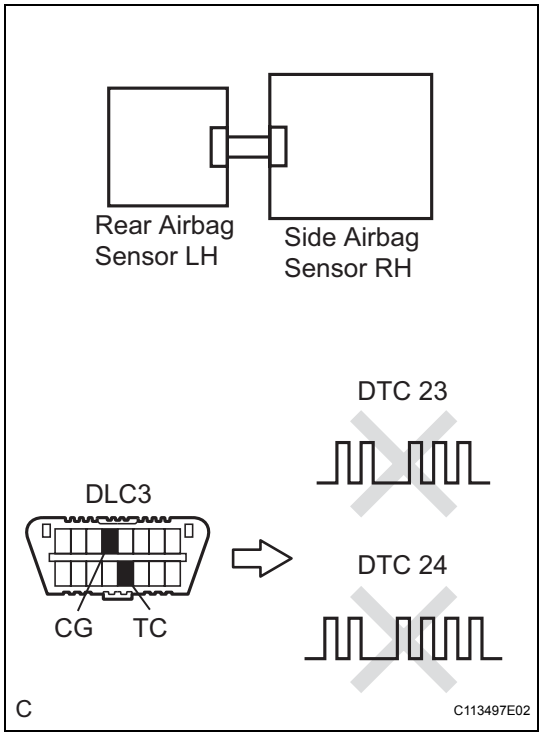

(a) Connect the connectors to the side airbag sensor RH.
(b) Interchange the rear airbag sensor LH with RH and connect the connectors to them.
(c) Connect the negative (-) terminal cable to the battery, and wait for at least 2 seconds.
(d) Turn the ignition switch on (IG), and wait for at least 60 seconds.
(e) Clear the DTCs stored in memory (See page RS-34).
(f) Turn the ignition switch off.
(g) Turn the ignition switch on (IG), and wait for at least 60 seconds.
(h) Check the DTCs (See page RS-34).
Result

Result	Proceed to
DTC B1635/24 is output.	A
DTC B1630/23 is output.	B
DTC B1630/23 and B1635/24 are not output.	C

HINT:
Codes other than DTC B1630/23 and B1635/24 may be output at this time, but they are not related to this check.

A → **Go to step 5**

RS

B → REPLACE REAR AIRBAG SENSOR RH

C

USE SIMULATION METHOD TO CHECK

5 CHECK SIDE AIRBAG SENSOR RH

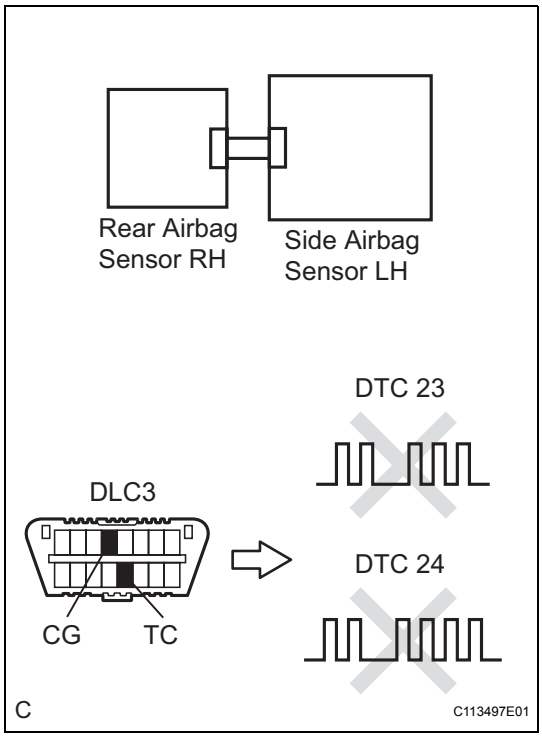

(a) Turn the ignition switch off.
(b) Disconnect the negative (-) terminal cable from the battery, and wait for at least 90 seconds.
(c) Return the rear airbag sensor LH and RH to their original positions and connect the connectors to them.
(d) Interchange the side airbag sensor RH with LH and connect the connectors to them.
(e) Connect the negative (-) terminal cable to the battery, and wait for at least 2 seconds.
(f) Turn the ignition switch on (IG), and wait for at least 60 seconds.
(g) Clear the DTCs stored in memory (See page RS-34).
(h) Turn the ignition switch off.
(i) Turn the ignition switch on (IG), and wait for at least 60 seconds.
(j) Check the DTCs (See page RS-34).

Result

Result	Proceed to
DTC B1635/24 is output.	A
DTC B1630/23 is output.	B
DTC B1630/23 and B1635/24 are not output.	C

HINT:
Codes other than DTC B1630/23 and B1635/24 may be output at this time, but they are not related to this check.

A → REPLACE CENTER AIRBAG SENSOR ASSEMBLY

B → REPLACE SIDE AIRBAG SENSOR RH

C

USE SIMULATION METHOD TO CHECK

DTC	B1653/35	Seat Position Airbag Sensor Circuit Malfunction

DESCRIPTION

The seat position airbag sensor circuit consists of the center airbag sensor assembly and the seat position airbag sensor.
DTC B1653/35 is recorded when a malfunction is detected in the seat position airbag sensor circuit.

DTC No.	DTC Detecting Condition	Trouble Area
B1653/35	• The center airbag sensor assembly receives a line short circuit signal, an open circuit signal, a short circuit to ground signal or a short circuit to B+ signal in the seat position airbag sensor circuit for 2 seconds. • Seat position airbag sensor malfunction • Center airbag sensor assembly malfunction	• Floor wire • Seat position airbag sensor • Center airbag sensor assembly

WIRING DIAGRAM

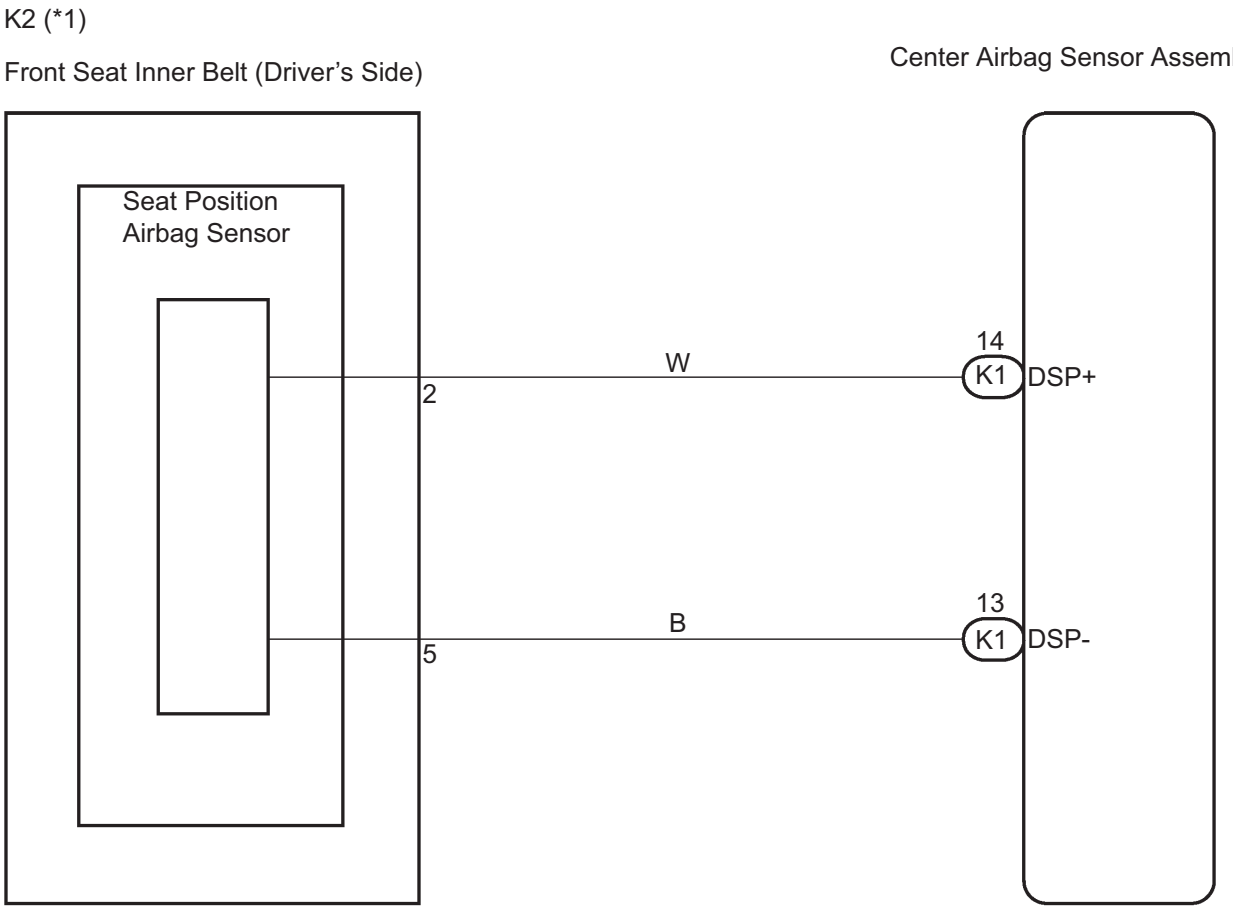

*1: The connectors of the seat position airbag sensor and the front seat inner belt assembly LH are in common use.

INSPECTION PROCEDURE

1	CHECK DTC

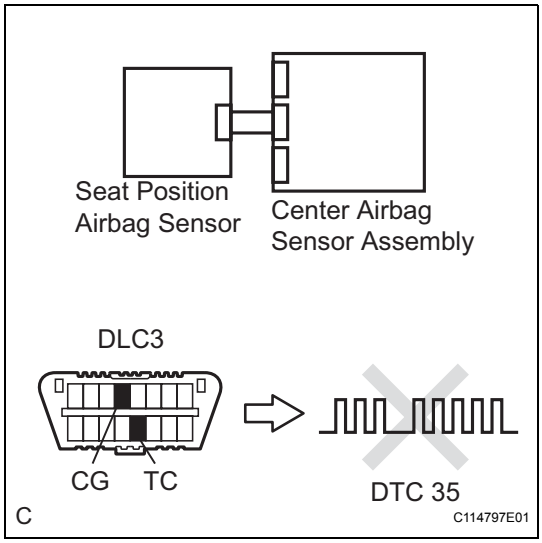

(a) Turn the ignition switch on (IG), and wait for at least 60 seconds.
(b) Clear the DTCs stored in memory (See page RS-34).
(c) Turn the ignition switch off.
(d) Turn the ignition switch on (IG), and wait for at least 60 seconds.
(e) Check the DTCs (See page RS-34).
OK:
DTC B1653/35 is not output.
HINT:
Codes other than DTC B1653/35 may be output at this time, but they are not related to this check.

NG → **Go to step 2**

OK

USE SIMULATION METHOD TO CHECK

2	CHECK CONNECTION OF CONNECTORS

(a) Turn the ignition switch off.
(b) Disconnect the negative (-) terminal cable from the battery, and wait for at least 90 seconds.
(c) Check that the connectors are properly connected to the center airbag sensor assembly and the seat position airbag sensor.
OK:
The connectors are properly connected.

NG → **CONNECT CONNECTORS, THEN GO TO STEP 1**

OK

3 CHECK FLOOR WIRE (OPEN)

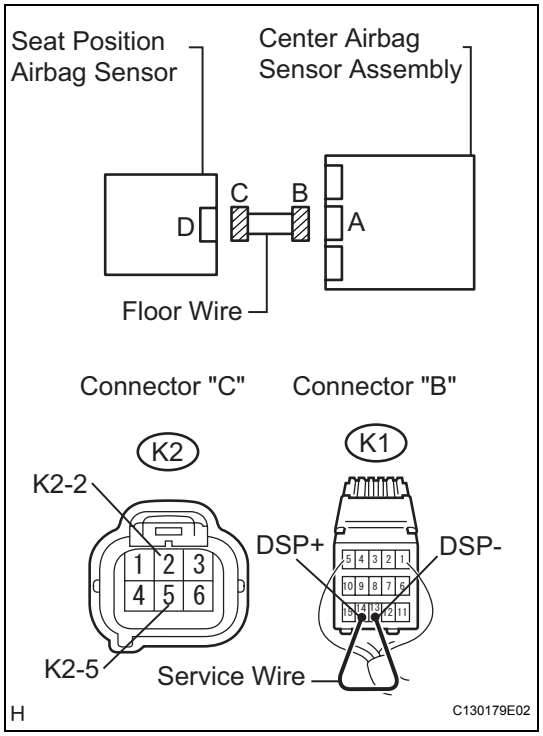

(a) Disconnect the connectors from the center airbag sensor assembly and the seat position airbag sensor.
(b) Using a service wire, connect K1-14 (DSP+) and K1-13 (DSP-) of connector "B".
NOTICE:
Do not forcibly insert a service wire into the terminals of the connector when connecting.
(c) Measure the resistance according to the value(s) in the table below.
Standard resistance

Tester connection	Condition	Specified condition
K2-2 - K2-5	Always	Below 1 Ω

NG → **REPAIR OR REPLACE FLOOR WIRE**

OK

4 CHECK FLOOR WIRE (SHORT)

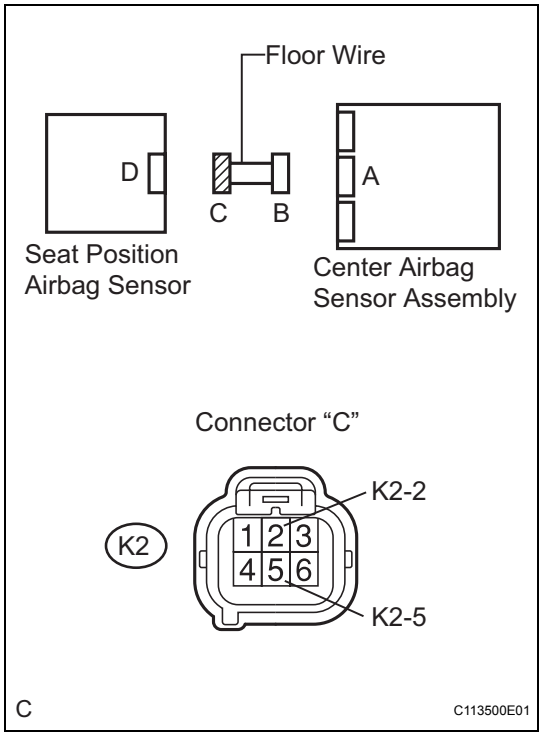

(a) Disconnect the service wire from connector "B".
(b) Measure the resistance according to the value(s) in the table below.
Standard resistance

Tester connection	Condition	Specified condition
K2-2 - K2-5	Always	1 MΩ or higher

NG → **REPAIR OR REPLACE FLOOR WIRE**

OK

RS

5 CHECK FLOOR WIRE (SHORT TO B+)

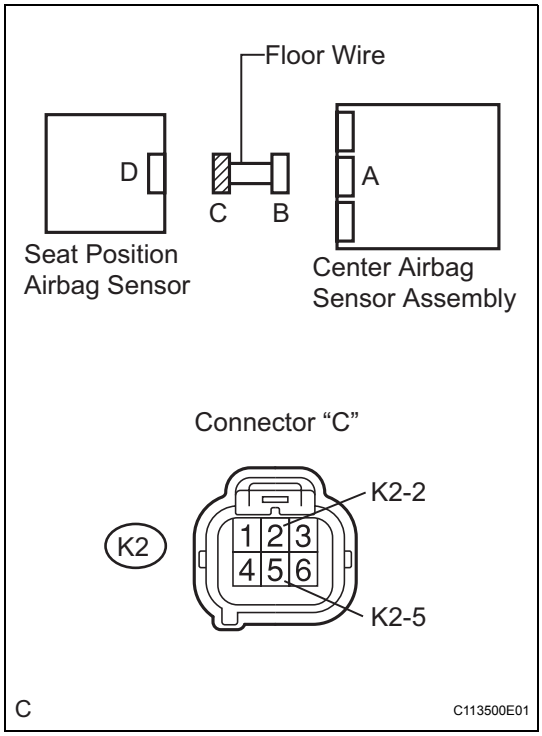

(a) Connect the negative (-) terminal cable to the battery, and wait for at least 2 seconds.
(b) Turn the ignition switch on (IG).
(c) Measure the voltage according to the value(s) in the table below.

Standard voltage

Tester connection	Condition	Specified condition
K2-2 - Body ground	Ignition switch on (IG)	Below 1 V
K2-5 - Body ground	Ignition switch on (IG)	Below 1 V

NG → **REPAIR OR REPLACE FLOOR WIRE**

OK

6 CHECK FLOOR WIRE (SHORT TO GROUND)

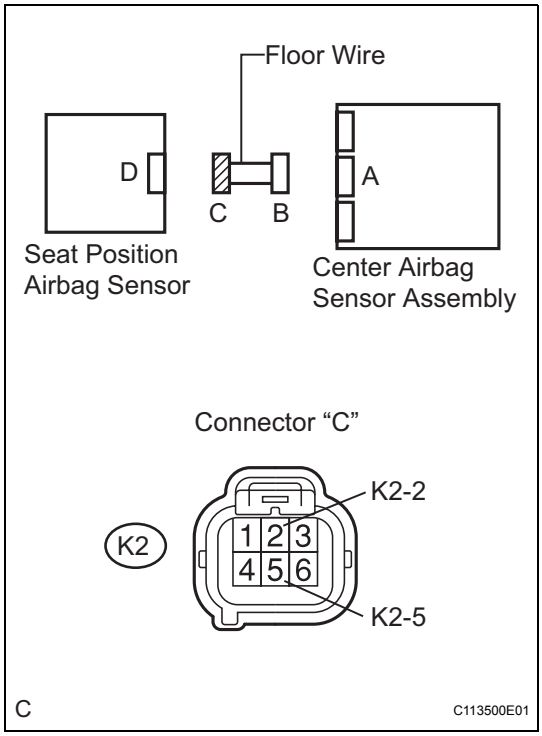

(a) Turn the ignition switch off.
(b) Disconnect the negative (-) terminal cable from the battery, and wait for at least 90 seconds.
(c) Measure the resistance according to the value(s) in the table below.

Standard resistance

Tester connection	Condition	Specified condition
K2-2 - Body ground	Always	1 MΩ or higher
K2-5 - Body ground	Always	1 MΩ or higher

NG → **REPAIR OR REPLACE FLOOR WIRE**

OK

RS

7	CHECK SEAT POSITION AIRBAG SENSOR

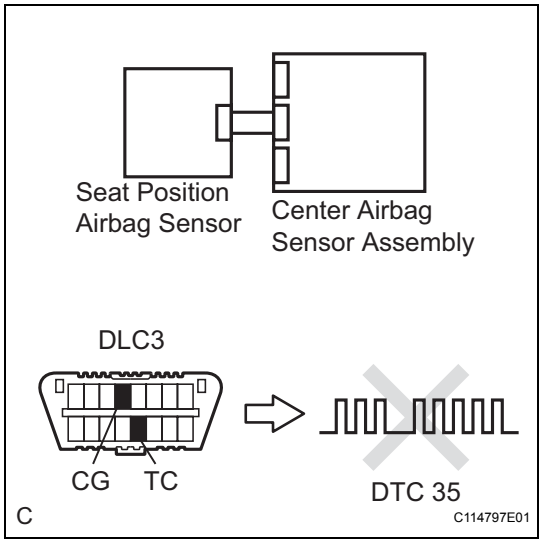

(a) Connect the connectors to the center airbag sensor assembly and the seat position airbag sensor.
(b) Connect the negative (-) terminal cable to the battery, and wait for at least 2 seconds.
(c) Turn the ignition switch on (IG), and wait for at least 60 seconds.
(d) Clear the DTCs stored in memory (See page RS-34).
(e) Turn the ignition switch off.
(f) Turn the ignition switch on (IG), and wait for at least 60 seconds.
(g) Check the DTCs (See page RS-34).
OK:
DTC B1653/35 is not output.
HINT:
Codes other than DTC B1653/35 may be output at this time, but they are not related to this check.

NG → **Go to step 8**

OK

USE SIMULATION METHOD TO CHECK

8	REPLACE SEAT POSITION AIRBAG SENSOR

(a) Turn the ignition switch off.
(b) Disconnect the negative (-) terminal cable from the battery, and wait for at least 90 seconds.
(c) Replace the seat position airbag sensor (See page RS-367).
HINT:
Perform inspection using parts from a normal vehicle if possible.

NEXT

9	CHECK CENTER AIRBAG SENSOR ASSEMBLY

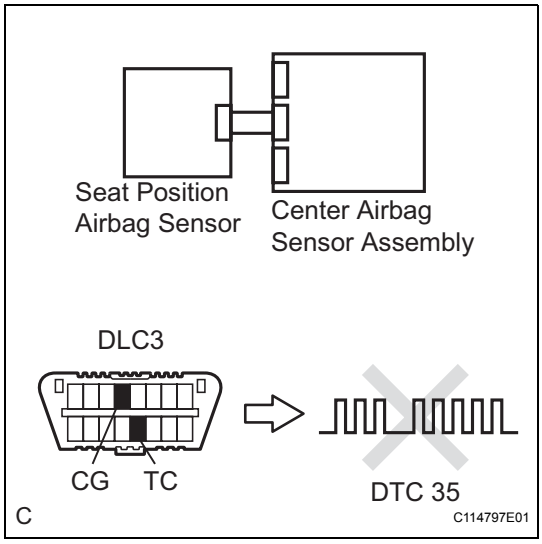

(a) Connect the negative (-) terminal cable to the battery, and wait for at least 2 seconds.
(b) Turn the ignition switch on (IG), and wait for at least 60 seconds.
(c) Clear the DTCs stored in memory (See page RS-34).
(d) Turn the ignition switch off.
(e) Turn the ignition switch on (IG), and wait for at least 60 seconds.
(f) Check the DTCs (See page RS-34).

OK:

DTC B1653/35 is not output.

HINT:

Codes other than DTC B1653/35 may be output at this time, but they are not related to this check.

NG → **REPLACE CENTER AIRBAG SENSOR ASSEMBLY**

OK

END

DTC	B1655/37	Driver Side Seat Belt Buckle Switch Circuit Malfunction

DESCRIPTION

The driver side seat belt buckle switch circuit consists of the center airbag sensor assembly and the front seat inner belt assembly LH.
DTC B1655/37 is recorded when a malfunction is detected in the driver side seat belt buckle switch circuit.

DTC No.	DTC Detection Condition	Trouble Area
B1655/37	• The center airbag sensor assembly receives a line short circuit signal, an open circuit signal, a short circuit to ground signal or a short circuit to B+ signal in the driver side seat belt buckle switch circuit for 2 seconds. • Front seat inner belt assembly LH malfunction • Center airbag sensor assembly malfunction	• Floor wire • Front seat inner belt assembly LH (Driver side seat belt buckle switch) • Center airbag sensor assembly

WIRING DIAGRAM

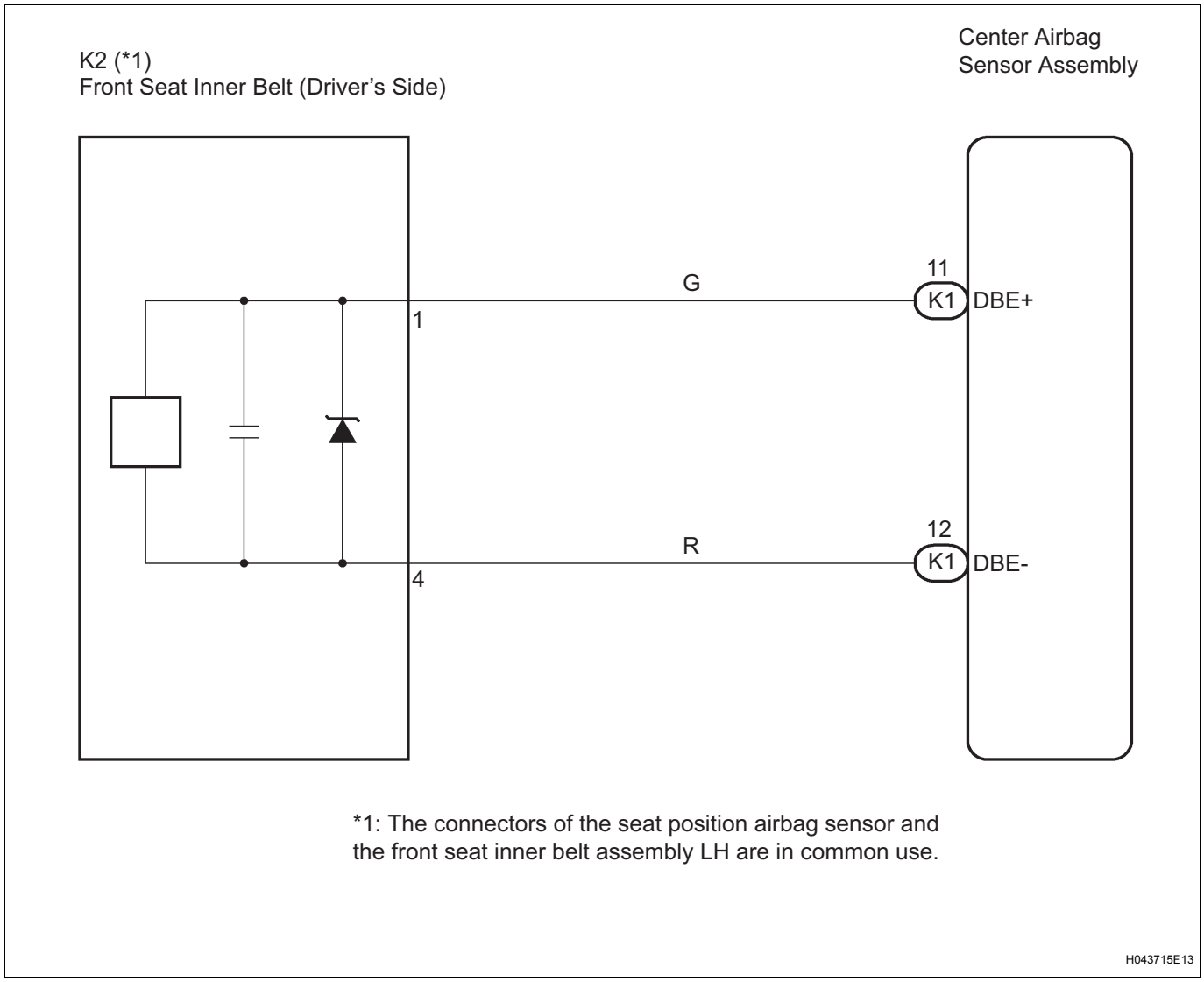

*1: The connectors of the seat position airbag sensor and the front seat inner belt assembly LH are in common use.

H043715E13

INSPECTION PROCEDURE

1	CHECK DTC

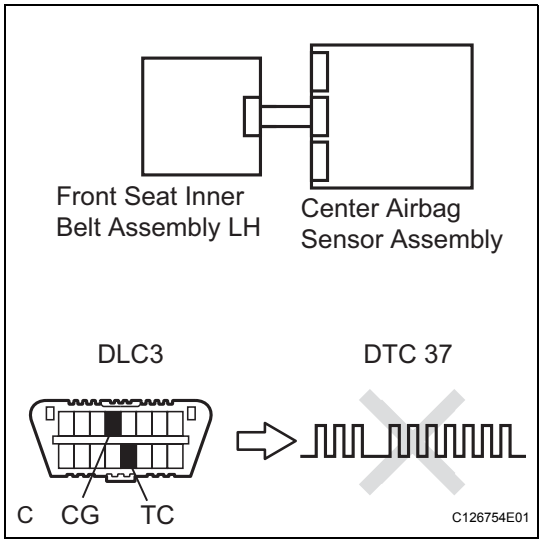

(a) Turn the ignition switch on (IG), and wait for at least 60 seconds.
(b) Clear the DTCs stored in memory (See page RS-34).
(c) Turn the ignition switch off.
(d) Turn the ignition switch on (IG), and wait for at least 60 seconds.
(e) Check the DTCs (See page RS-34).

OK:

DTC B1655/37 is not output.

HINT:

Codes other than DTC B1655/37 may be output at this time, but they are not related to this check.

NG → **Go to step 2**

OK

USE SIMULATION METHOD TO CHECK

2	CHECK CONNECTION OF CONNECTORS

(a) Turn the ignition switch off.
(b) Disconnect the negative (-) terminal cable from the battery, and wait for at least 90 seconds.
(c) Check that the connectors are properly connected to the center airbag sensor assembly and the front seat inner belt assembly LH.

OK:

The connectors are properly connected.

NG → **CONNECT CONNECTORS, THEN GO TO STEP 1**

OK

3 CHECK FLOOR WIRE (OPEN)

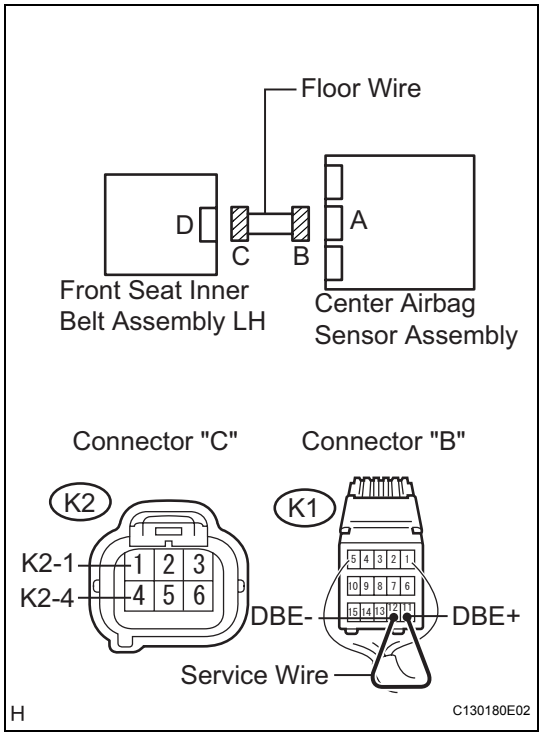

(a) Disconnect the connectors from the center airbag sensor assembly and the front seat inner belt assembly LH.
(b) Using a service wire, connect K1-11 (DBE+) and K1-12 (DBE-) of connector "B".
NOTICE:
Do not forcibly insert a service wire into the terminals of the connector when connecting.
(c) Measure the resistance according to the value(s) in the table below.
Standard resistance

Tester connection	Condition	Specified condition
K2-1 - K2-4	Always	Below 1 Ω

NG → **REPAIR OR REPLACE FLOOR WIRE**

OK

4 CHECK FLOOR WIRE (SHORT)

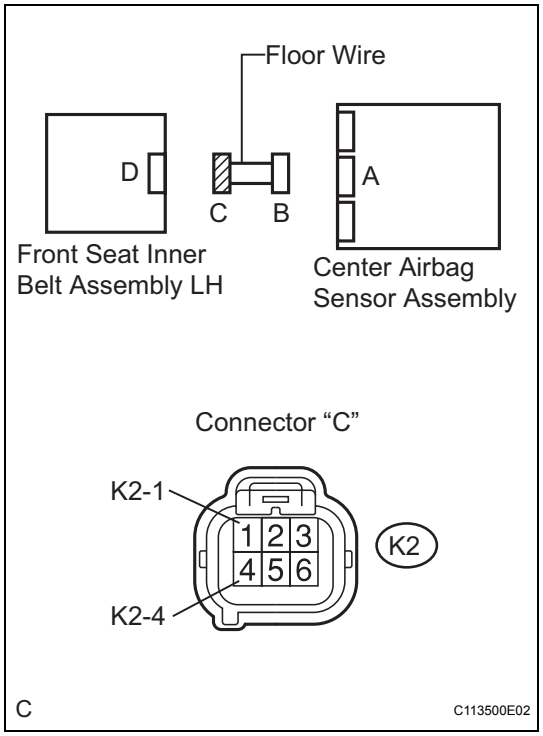

(a) Disconnect the service wire from connector "B".
(b) Measure the resistance according to the value(s) in the table below.
Standard resistance

Tester connection	Condition	Specified condition
K2-1 - K2-4	Always	1 MΩ or higher

NG → **REPAIR OR REPLACE FLOOR WIRE**

OK

RS

5 CHECK FLOOR WIRE (SHORT TO B+)

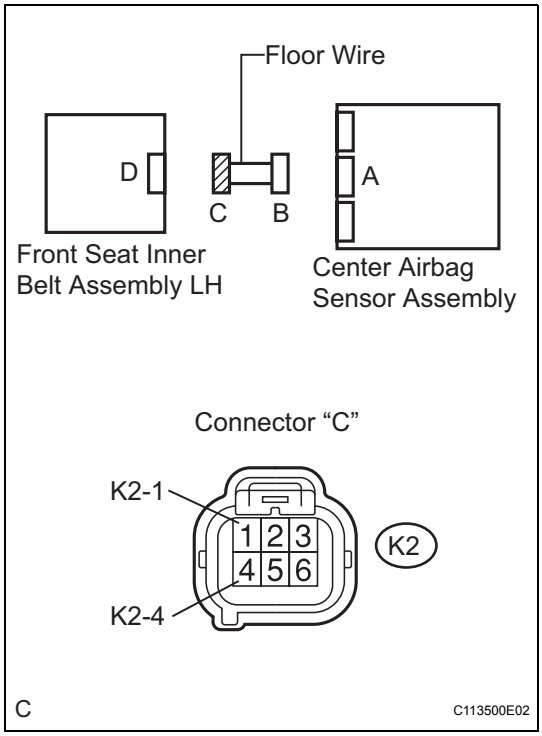

(a) Connect the negative (-) terminal cable to the battery, and wait for at least 2 seconds.
(b) Turn the ignition switch on (IG).
(c) Measure the voltage according to the value(s) in the table below.

Standard voltage

Tester connection	Condition	Specified condition
K2-1 - Body ground	Ignition switch on (IG)	Below 1 V
K2-4 - Body ground	Ignition switch on (IG)	Below 1 V

NG → REPAIR OR REPLACE FLOOR WIRE

OK

6 CHECK FLOOR WIRE (SHORT TO GROUND)

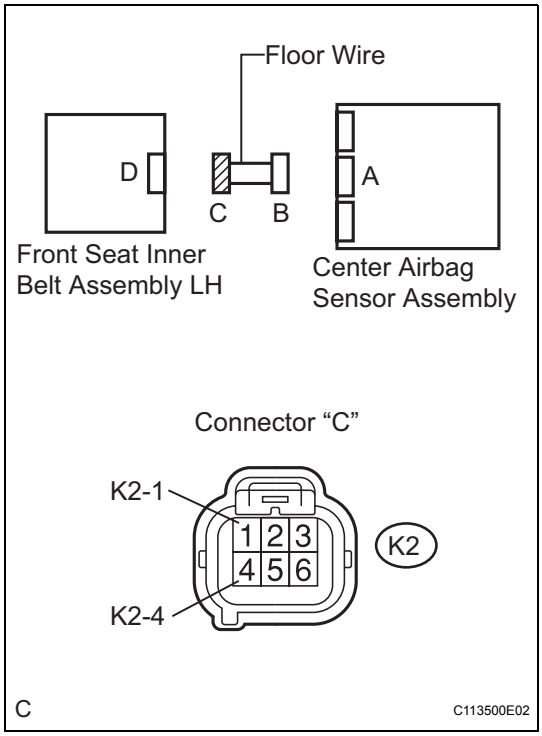

(a) Turn the ignition switch off.
(b) Disconnect the negative (-) terminal cable from the battery, and wait for at least 90 seconds.
(c) Measure the resistance according to the value(s) in the table below.

Standard resistance

Tester connection	Condition	Specified condition
K2-1 - Body ground	Always	1 MΩ or higher
K2-4 - Body ground	Always	1 MΩ or higher

NG → REPAIR OR REPLACE FLOOR WIRE

OK

RS

7	CHECK FRONT SEAT INNER BELT ASSEMBLY LH

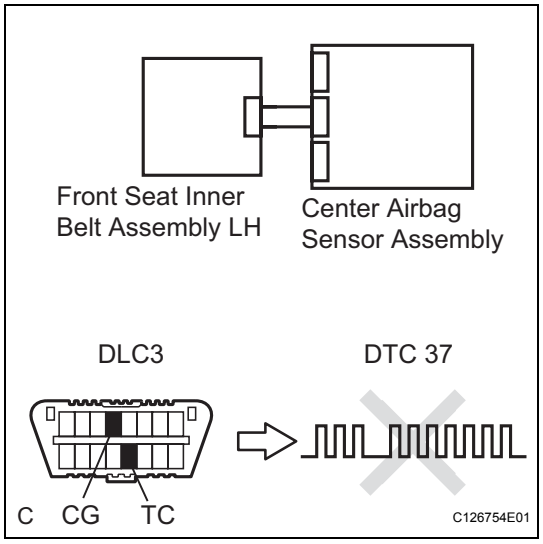

(a) Connect the connectors to the center airbag sensor assembly and the front seat inner belt assembly LH.
(b) Connect the negative (-) terminal cable to the battery, and wait for at least 2 seconds.
(c) Turn the ignition switch on (IG), and wait for at least 60 seconds.
(d) Clear the DTCs stored in memory (See page RS-34).
(e) Turn the ignition switch off.
(f) Turn the ignition switch on (IG), and wait for at least 60 seconds.
(g) Check the DTCs (See page RS-34).
OK:
DTC B1655/37 is not output.
HINT:
Codes other than DTC B1655/37 may be output at this time, but they are not related to this check.

NG → **Go to step 8**

OK

USE SIMULATION METHOD TO CHECK

8	REPLACE FRONT SEAT INNER BELT ASSEMBLY LH

(a) Turn the ignition switch off.
(b) Disconnect the negative (-) terminal cable from the battery, and wait for at least 90 seconds.
(c) Replace the front seat inner belt assembly LH (See page SB-7).
HINT:
Perform inspection using parts from a normal vehicle if possible.

NEXT

9	CHECK CENTER AIRBAG SENSOR ASSEMBLY

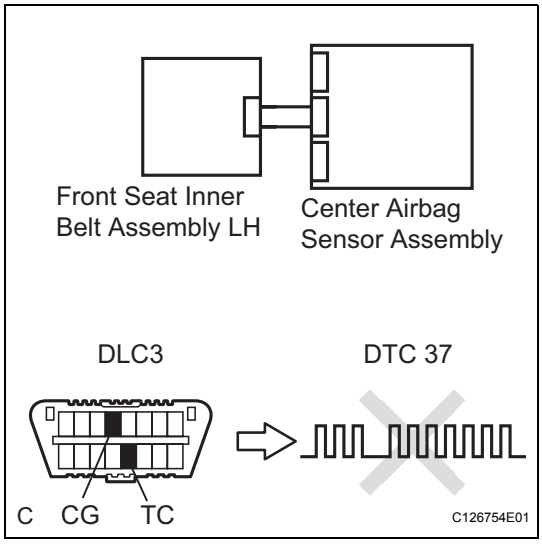

(a) Connect the negative (-) terminal cable to the battery, and wait for at least 2 seconds.
(b) Turn the ignition switch on (IG), and wait for at least 60 seconds.
(c) Clear the DTCs stored in memory (See page RS-34).
(d) Turn the ignition switch off.
(e) Turn the ignition switch on (IG), and wait for at least 60 seconds.
(f) Check the DTCs (See page RS-34).

OK:

DTC B1655/37 is not output.

HINT:

Codes other than DTC B1655/37 may be output at this time, but they are not related to this check.

NG → **REPLACE CENTER AIRBAG SENSOR ASSEMBLY**

OK

END

DTC	B1660/43	Passenger Airbag ON / OFF Indicator Circuit Malfunction

DESCRIPTION

The passenger airbag ON/OFF indicator circuit consists of the center airbag sensor assembly and the accessory meter assembly.
This circuit indicates the operation condition of the front passenger airbag assembly and the front passenger side - side airbag and front passenger side front seat belt pretensioner.
DTC B1660/43 is recorded when a malfunction is detected in the passenger airbag ON/OFF indicator circuit.

DTC No.	DTC Detecting Condition	Trouble Area
B1660/43	• The center airbag sensor assembly receives a line short circuit signal, an open circuit signal, a short circuit to ground signal or a short circuit to B+ signal in the passenger airbag ON/OFF indicator circuit for 2 seconds. • Accessory meter assembly malfunction • Center airbag sensor assembly malfunction	• Instrument panel wire • Instrument panel wire No. 2 • Accessory meter assembly • Center airbag sensor assembly

WIRING DIAGRAM

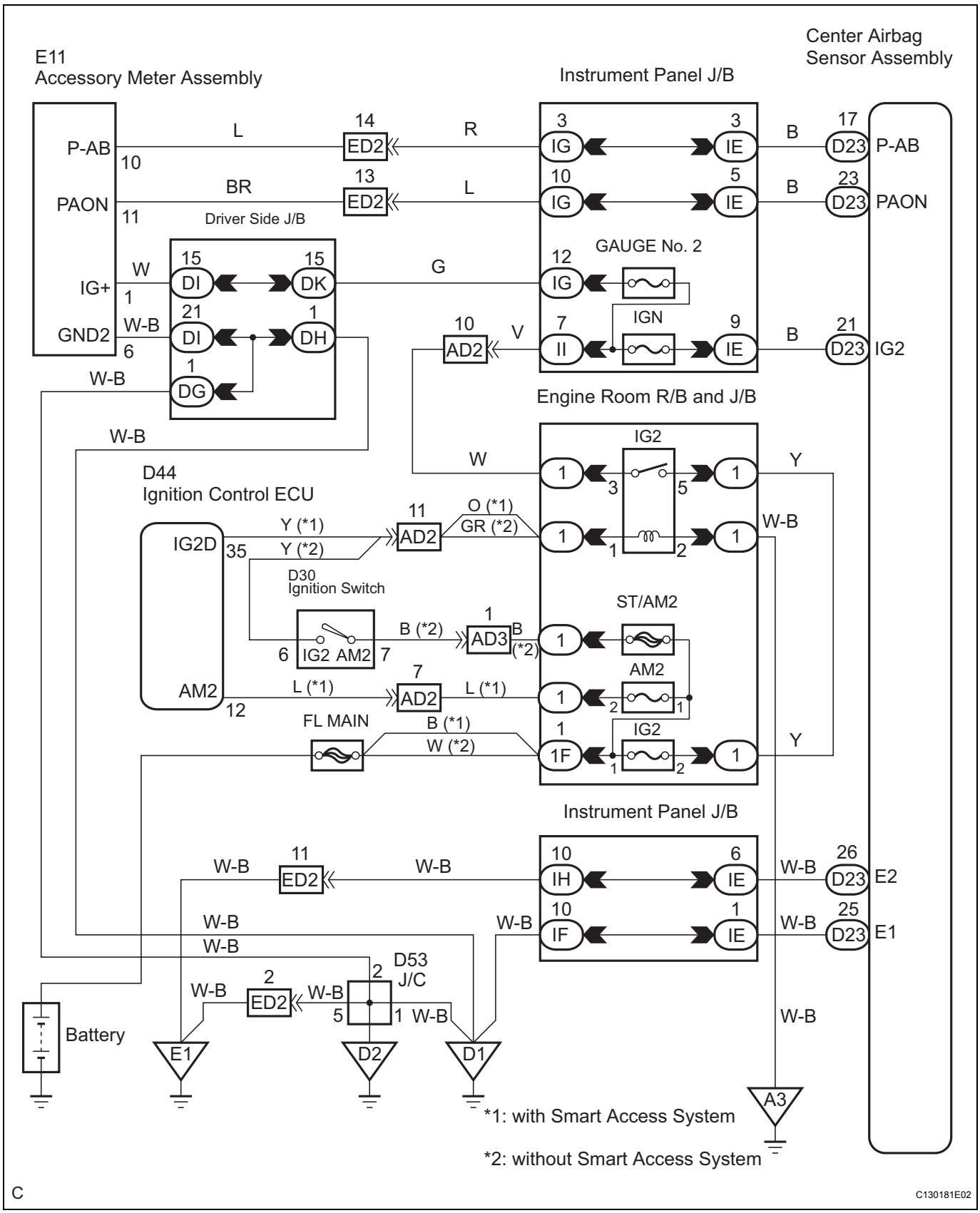

RS

INSPECTION PROCEDURE

1	CHECK PASSENGER AIRBAG ON / OFF INDICATOR OPERATION

(a) Turn the ignition switch on (IG).
(b) Check the passenger airbag ON/OFF indicator operation.
HINT:
Refer to the normal condition of the passenger airbag ON/OFF indicator (See page RS-212).
Result:
A:
The passenger airbag ON/OFF indicator always comes on.
B:
The passenger airbag ON/OFF indicator does not come on.

B	Go to step 13

A

2	CHECK CONNECTION OF CONNECTOR

(a) Turn the ignition switch off.
(b) Disconnect the negative (-) terminal cable from the battery, and wait for at least 90 seconds.
(c) Check that the connector is properly connected to the center airbag sensor assembly.
OK:
The connector is connected.

NG	CONNECT CONNECTOR, THEN CHECK DTC

OK

3	CHECK ACCESSORY METER ASSEMBLY (PASSENGER AIRBAG ON / OFF INDICATOR)

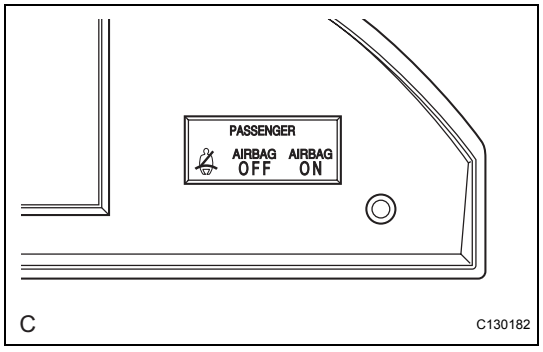

(a) Turn the ignition switch off.
(b) Disconnect the negative (-) terminal cable from the battery, and wait for at least 90 seconds.
(c) Disconnect the connector from the accessory meter assembly.
(d) Connect the negative (-) terminal cable to the battery, and wait for at least 2 seconds.
(e) Turn the ignition switch on (IG).
(f) Check the passenger airbag ON/OFF indicator operation.
OK:
The passenger airbag ON/OFF indicator ("ON" and "OFF") do not come on.

NG	Go to step 4

RS

OK

REPLACE CENTER AIRBAG SENSOR ASSEMBLY

4	CHECK PASSENGER AIRBAG ON / OFF INDICATOR CIRCUIT (SHORT TO GROUND)

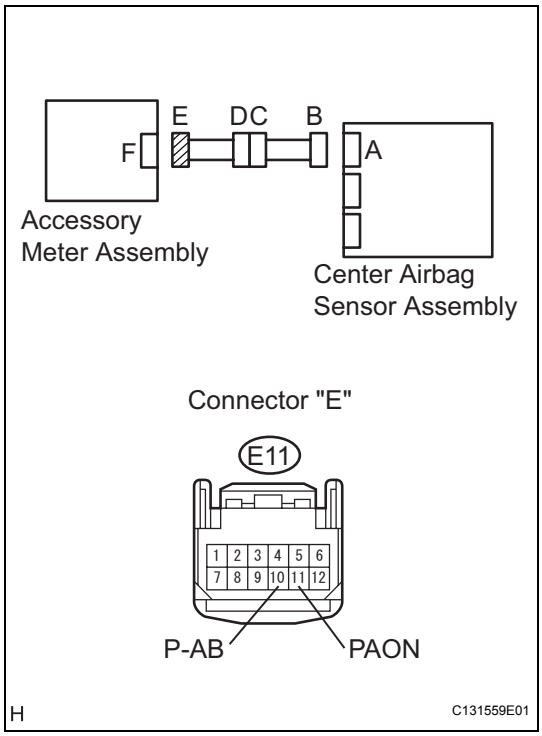

(a) Turn the ignition switch off.
(b) Disconnect the negative (-) terminal cable form the battery, and wait for at least 90 seconds.
(c) Disconnect the connectors from the center airbag sensor assembly.
(d) Measure the resistance according to the value(s) in the table below.

Standard resistance

Terminal connection	Condition	Specified condition
E11-11 (PAON) - Body ground	Always	1 MΩ or higher
E11-10 (P-AB) - Body ground	Always	1 MΩ or higher

NG → **Go to step 9**

OK

5 CHECK PASSENGER AIRBAG ON / OFF INDICATOR CIRCUIT (SHORT)

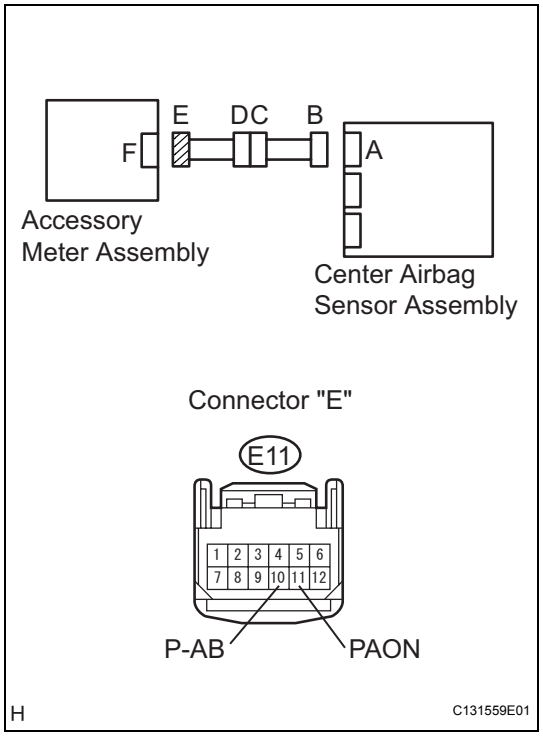

(a) Measure the resistance according to the value(s) in the table below.

Standard resistance

Terminal connection	Condition	Specified condition
E11-11 (PAON) - Body ground	Always	1 MΩ or higher
E11-10 (P-AB) - Body ground	Always	1 MΩ or higher

NG → **Go to step 10**

OK

6 CHECK PASSENGER AIRBAG ON / OFF INDICATOR CIRCUIT (OPEN)

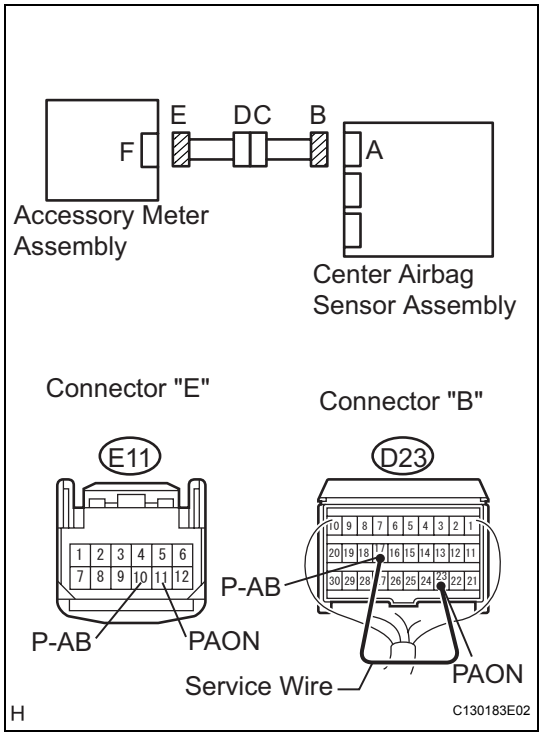

(a) Using a service wire, connect D23-23 (PAON) and D23-17 (P-AB) of connector "B".

NOTICE:

Do not forcibly insert a service wire into the terminals of connector when connecting.

(b) Measure the resistance according to the value(s) in the table below.

Standard resistance

Tester connection	Condition	Specified condition
E11-11 (PAON) - E11-10 (P-AB)	Always	Below 1 Ω

NG → **Go to step 11**

OK

RS

7 CHECK PASSENGER AIRBAG ON / OFF INDICATOR CIRCUIT (SHORT TO B+)

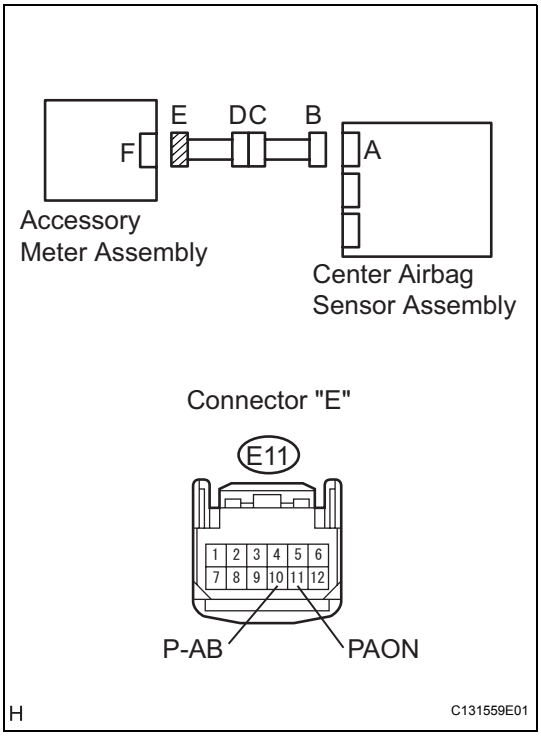

(a) Disconnect the service wire from connector "B".
(b) Connect the negative (-) terminal cable to the battery, and wait for at least 2 seconds.
(c) Turn the ignition switch on (IG).
(d) Measure the voltage according to the value(s) in the table below.

Standard voltage

Tester connection	Condition	Specified condition
E11-11 (PAON) - Body ground	Ignition switch on (IG)	Below 1 V
E11-10 (P-AB) - Body ground	Ignition switch on (IG)	Below 1 V

NG → **Go to step 12**

OK

8 CHECK ACCESSORY METER ASSEMBLY

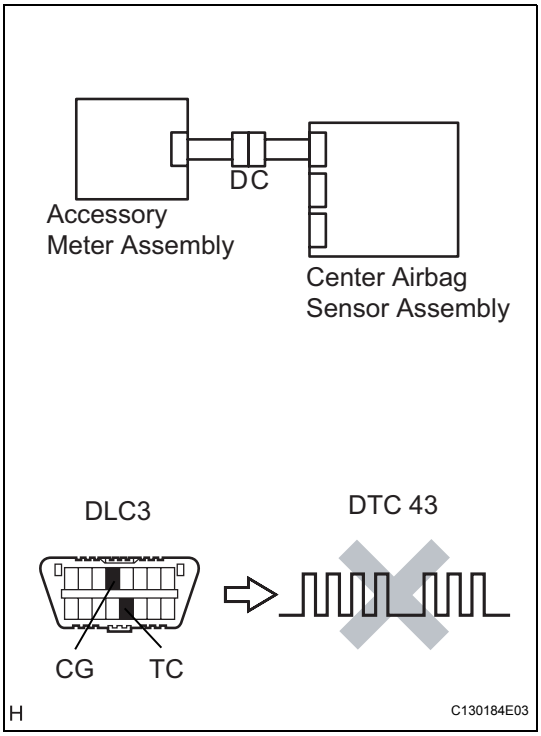

(a) Connect the connectors to the center airbag sensor assembly and the accessory meter assembly.
(b) Connect the negative (-) terminal cable to the battery, and wait for at least 2 seconds.
(c) Turn the ignition switch on (IG), and wait for at least 60 seconds.
(d) Clear the DTCs stored in memory (See page RS-34).
(e) Turn the ignition switch off.
(f) Turn the ignition switch on (IG), and wait for at least 60 seconds.
(g) Check the DTCs (See page RS-34).

OK:

DTC B1660/43 is not output.

HINT:

Codes other than DTC B1660/43 may be output at this time, but they are not related to this check.

NG → **REPLACE ACCESSORY METER ASSEMBLY**

OK

USE SIMULATION METHOD TO CHECK

9 CHECK INSTRUMENT PANEL WIRE NO. 2 (SHORT TO GROUND)

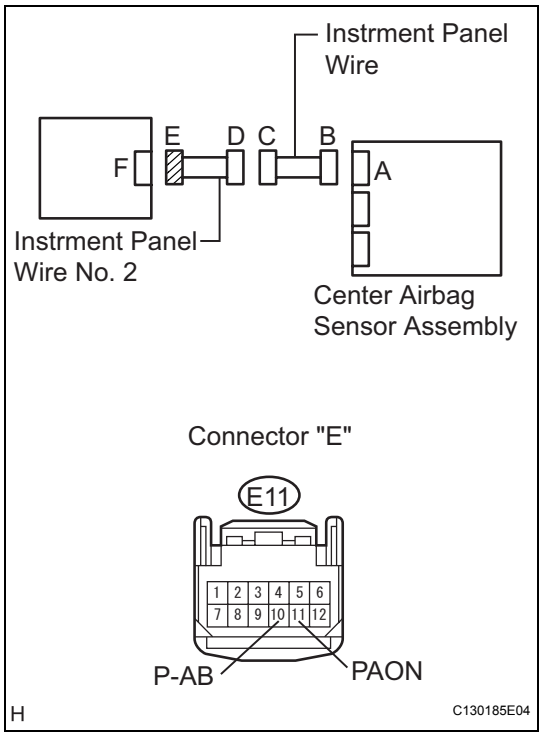

(a) Disconnect the instrument panel wire No. 2 connector from the instrument panel wire.
(b) Measure the resistance according to the value(s) in the table below.

Standard resistance

Tester connection	Condition	Specified condition
E11-11 (PAON) - Body ground	Always	1 MΩ or higher
E11-10 (P-AB) - Body ground	Always	1 MΩ or higher

NG → **REPAIR OR REPLACE INSTRUMENT PANEL WIRE NO. 2**

OK

REPAIR OR REPLACE INSTRUMENT PANEL WIRE

10	CHECK INSTRUMENT PANEL WIRE NO. 2 (SHORT)

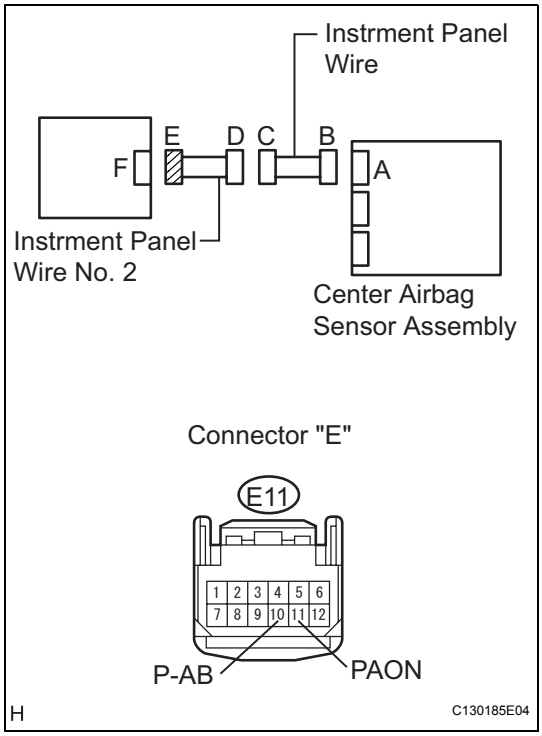

(a) Disconnect the instrument panel wire No. 2 connector from the instrument panel wire.
(b) Measure the resistance according to the value(s) in the table below.

Standard resistance

Tester connection	Condition	Specified condition
E11-11 (PAON) - E11-10 (P-AB)	Always	1 MΩ or higher

NG → **REPAIR OR REPLACE INSTRUMENT PANEL WIRE NO. 2**

OK

REPAIR OR REPLACE INSTRUMENT PANEL WIRE

11	CHECK INSTRUMENT PANEL WIRE NO. 2 (OPEN)

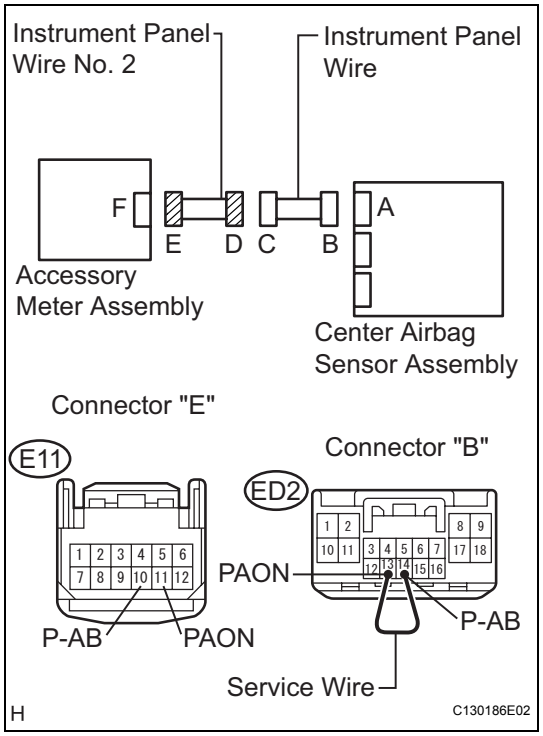

(a) Disconnect the service wire from connector "B".
(b) Disconnect the instrument panel wire No. 2 connector from the instrument panel wire.
(c) Using a service wire, connect ED2-13 (PAON) and ED2-14 (P-AB) of connector "D".
NOTICE:
Do not forcibly insert a service wire into the terminals of connector when connecting.
(d) Measure the resistance according to the value(s) in the table below.
Standard resistance

Tester connection	Condition	Specified condition
E11-11 (PAON) - E11-10 (P-AB)	Always	Below 1 Ω

NG → **REPAIR OR REPLACE INSTRUMENT PANEL WIRE NO. 2**

OK

REPAIR OR REPLACE INSTRUMENT PANEL WIRE

12	CHECK INSTRUMENT PANEL WIRE NO. 2 (SHORT TO B+)

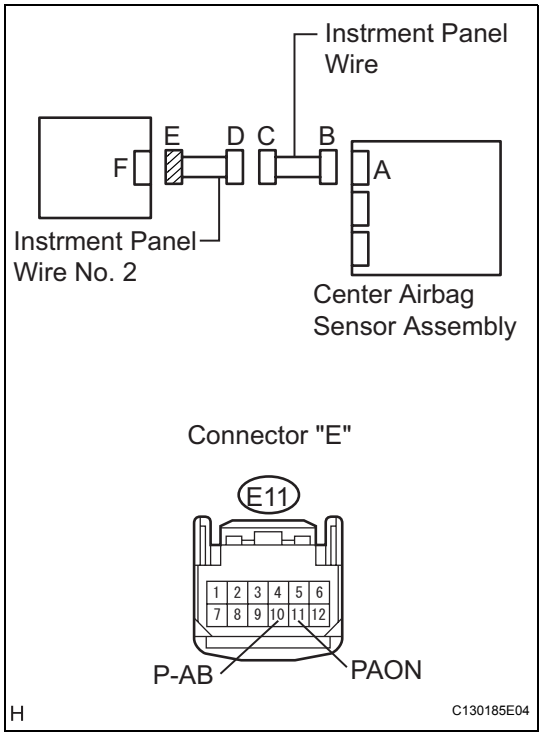

(a) Turn the ignition switch off.
(b) Disconnect the negative (-) terminal cable from the battery, and wait for at least 90 seconds.
(c) Disconnect the instrument panel wire No. 2 connector from the instrument panel wire.
(d) Connect the negative (-) terminal cable to the battery, and wait for at least 2 seconds.
(e) Turn the ignition switch on (IG).
(f) Measure the voltage according to the value(s) in the table below.

Standard voltage

Tester connection	Condition	Specified condition
E11-11 (PAON) - Body ground	Ignition switch on (IG)	Below 1 V
E11-10 (P-AB) - Body ground	Ignition switch on (IG)	Below 1 V

NG → **REPAIR OR REPLACE INSTRUMENT PANEL WIRE NO. 2**

OK

REPAIR OR REPLACE INSTRUMENT PANEL WIRE

13	CHECK CONNECTION OF CONNECTOR

(a) Turn the ignition switch off.
(b) Disconnect the negative (-) terminal cable from the battery, and wait for at least 90 seconds.
(c) Check that the connectors are properly connected to the center airbag sensor assembly and the accessory meter assembly.

OK:

The connectors are connected.

NG → **CONNECT CONNECTOR, THEN CHECK DTC**

OK

14 CHECK WIRE HARNESS (SOURCE VOLTAGE)

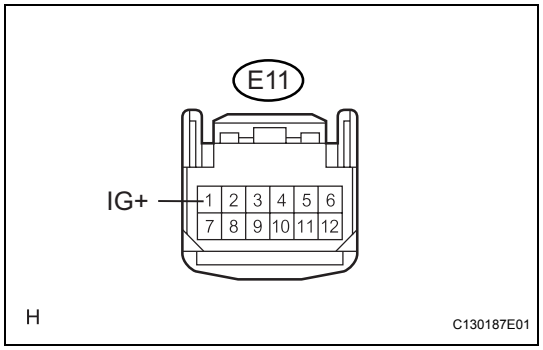

(a) Disconnect the connector from the accessory meter assembly.
(b) Connect the negative (-) terminal cable to the battery, and wait at least 2 seconds.
(c) Turn the ignition switch on (IG).
(d) Measure the voltage according to the value(s) in the table below.

Standard voltage

Terminal connection	Condition	Specified condition
E11-1 (IG+) - Body ground	Ignition switch on (IG)	10 to 14 V

NG → **REPAIR OR REPLACE WIRE HARNESS**

OK

15 CHECK ACCESSORY METER ASSEMBLY

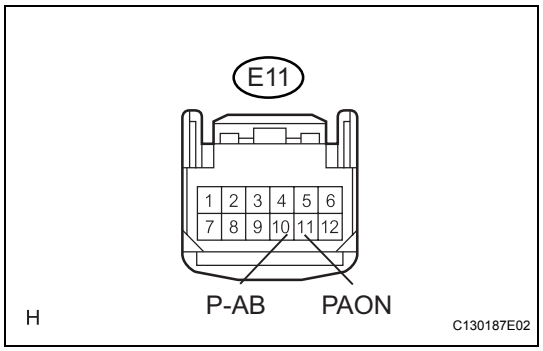

(a) Turn the ignition switch off.
(b) Disconnect the negative (-) terminal cable from the battery, and wait for at least 90 seconds.
(c) Connect the connector to the accessory meter assembly.
(d) Connect the negative (-) terminal cable to the battery, and wait for at least 2 seconds.
(e) Turn the ignition switch on (IG).

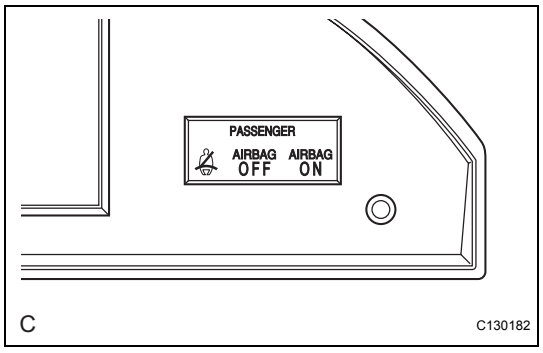

(f) Check that the passenger airbag ON/OFF indicator condition in the table below.

Standard

Terminal connection	Condition	Specified condition
E11-11 (PAON) - Body ground	Ignition switch on (IG)	ON indicator comes on
E11-10 (P-AB) - Body ground	Ignition switch on (IG)	OFF indicator comes on

NG → **REPLACE ACCESSORY METER ASSEMBLY**

OK

16	CHECK CENTER AIRBAG SENSOR ASSEMBLY

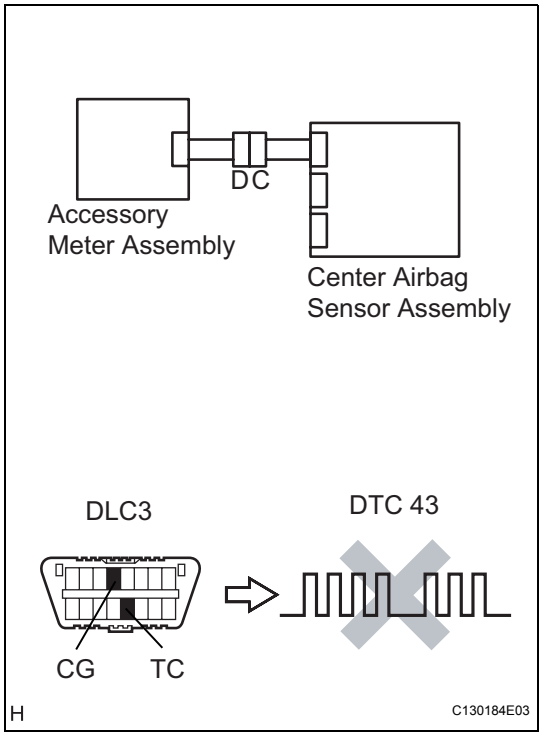

(a) Turn the ignition switch off.
(b) Disconnect the negative (-) terminal cable from the battery, and wait for at least 90 seconds.
(c) Connect the connector to the center airbag sensor assembly.
(d) Connect the negative (-) terminal cable to the battery, and wait for at least 2 seconds.
(e) Turn the ignition switch on (IG), and wait for at least 60 seconds.
(f) Clear the DTCs stored in memory (See page RS-34).
(g) Turn the ignition switch off.
(h) Turn the ignition switch on (IG), and wait for at least 60 seconds.
(i) Check the DTCs (See page RS-34).

OK:

DTC B1660/43 is not output.

HINT:

Codes other than DTC B1660/43 may be output at this time, but they are not related to this check.

NG → **REPLACE CENTER AIRBAG SENSOR ASSEMBLY**

OK

USE SIMULATION METHOD TO CHECK

DTC	B1662/45	Indicator Light Circuit Malfunction

DESCRIPTION

The indicator light circuit consists of the center airbag sensor assembly and the combination meter.
When the center airbag sensor assembly detects a malfunction in the SRS airbag system, the SRS warning light comes on to inform the driver.
It also comes on when the source voltage drops, and automatically goes off in approximately 10 seconds after the source voltage returns to normal (DTC is not stored).
The SRS warning light comes on for 6 seconds after the ignition switch is turned on (IG) and goes off in the system is normal.
When an open circuit is detected, such as when the connector between the combination meter and the center airbag sensor assembly is disconnected, the SRS warning light remains on even when approximately 6 seconds elapsed after the ignition switch is turned on (IG).
DTC B1662/45 is recorded when a malfunction is detected in the indicator light circuit.

DTC No.	DTC Detecting Condition	Trouble Area
B1662/45	• The center airbag sensor assembly receives an open circuit signal or a short circuit to ground signal in the indicator light circuit for 2 seconds. • Combination meter malfunction • Center airbag sensor assembly malfunction	• Instrument panel wire • Combination meter (SRS warning light) • Center airbag sensor assembly

HINT:
When DTC B1662/45 and B1000/31 are output simultaneously, perform the troubleshooting for DTC B1662/45 first.

WIRING DIAGRAM

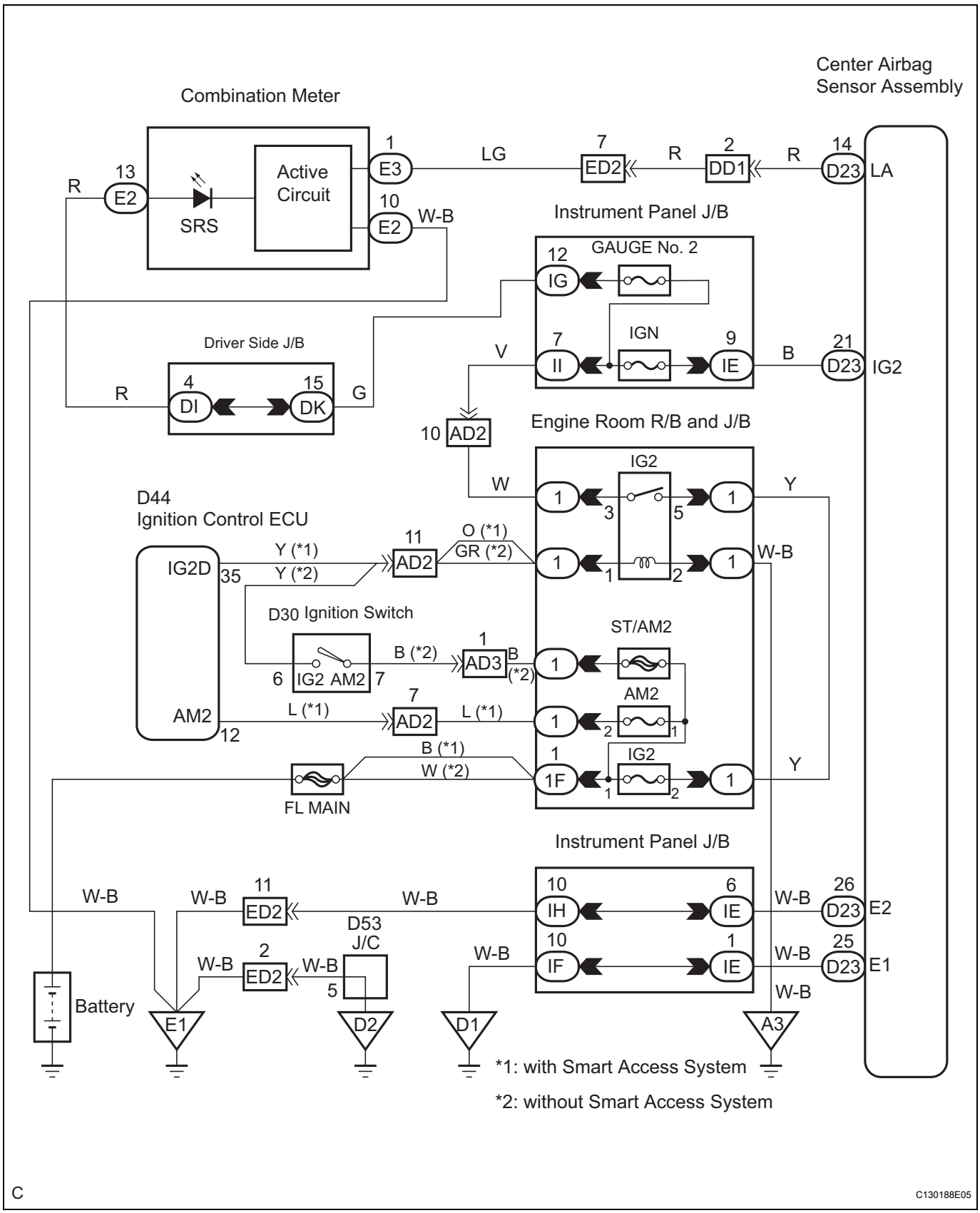

INSPECTION PROCEDURE

1	CHECK BATTERY

(a) Measure the voltage of the battery.
Standard voltage:
11 to 14 V

NG → **REPLACE BATTERY**

OK

2	CHECK CONNECTION OF CONNECTORS

(a) Turn the ignition switch off.
(b) Disconnect the negative (-) terminal cable from the battery, and wait for at least 90 seconds.
(c) Check that the connectors are properly connected to the center airbag sensor assembly and the combination meter.
OK:
The connectors are connected.

NG → **CONNECT CONNECTORS, THEN GO TO STEP 1**

OK

3	CHECK COMBINATION METER

(a) Disconnect the connectors from the center airbag sensor assembly.
(b) Connect the negative (-) terminal cable to the battery, and wait for at least 2 seconds.
(c) Turn the ignition switch on (IG), check the operation of the SRS warning light.
OK:
The SRS warning light comes on.

NG → **GO TO COMBINATION METER SYSTEM**

OK

4	CHECK INSTRUMENT PANEL WIRE

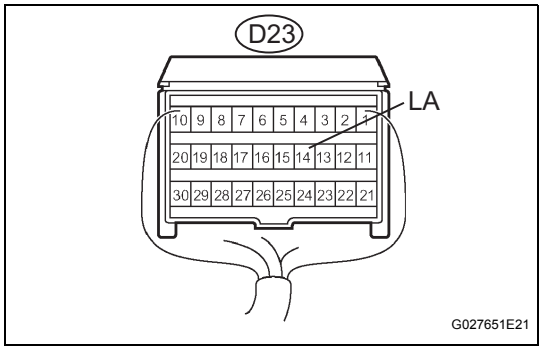

(a) Disconnect the connector from the combination meter.

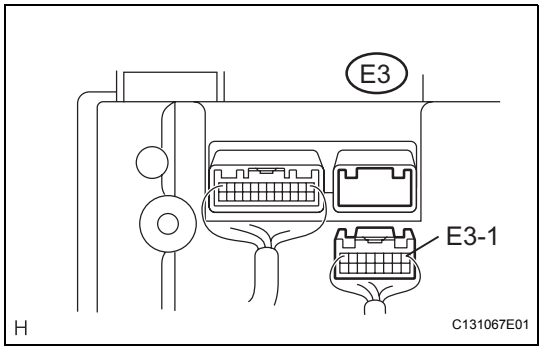

(b) Measure the resistance according to the value(s) in the table below.

Standard resistance

Tester connection	Condition	Specified condition
D23-14 (LA) - E3-1	Always	Below 1 Ω
D23-14 (LA) - Body ground	Always	1 MΩ or higher

NG → **REPAIR OR REPLACE INSTRUMENT PANEL WIRE**

OK

REPLACE CENTER AIRBAG SENSOR ASSEMBLY

DTC	B1800/51	Short in Driver Side Squib Circuit

DTC	B1801/51	Open in Driver Side Squib Circuit

DTC	B1802/51	Short to GND in Driver Side Squib Circuit

DTC	B1803/51	Short to B+ in Driver Side Squib Circuit

DESCRIPTION

The driver side squib circuit consists of the center airbag sensor assembly, the spiral cable and the steering pad.

The circuit instructs the SRS to deploy when deployment conditions are met.

These DTCs are recorded when a malfunction is detected in the driver side squib circuit.

DTC No.	DTC Detecting Condition	Trouble Area
B1800/51	• The center airbag sensor assembly receives a line short circuit signal 5 times in the driver side squib circuit during primary check. • Driver side squib malfunction • Spiral cable malfunction • Center airbag sensor assembly malfunction	• Instrument panel wire • Spiral cable • Steering pad (Driver side squib) • Center airbag sensor assembly
B1801/51	• The center airbag sensor assembly receives an open circuit signal in the driver side squib circuit for 2 seconds. • Driver side squib malfunction • Spiral cable malfunction • Center airbag sensor assembly malfunction	• Instrument panel wire • Spiral cable • Steering pad (Driver side squib) • Center airbag sensor assembly
B1802/51	• The center airbag sensor assembly receives a short circuit to ground signal in the driver side squib circuit for 0.5 seconds. • Driver side squib malfunction • Spiral cable malfunction • Center airbag sensor assembly malfunction	• Instrument panel wire • Spiral cable • Steering pad (Driver side squib) • Center airbag sensor assembly
B1803/51	• The center airbag sensor assembly receives a short circuit to B+ signal in the driver side squib circuit for 0.5 seconds. • Driver side squib malfunction • Spiral cable malfunction • Center airbag sensor assembly malfunction	• Instrument panel wire • Spiral cable • Steering pad (Driver side squib) • Center airbag sensor assembly

WIRING DIAGRAM

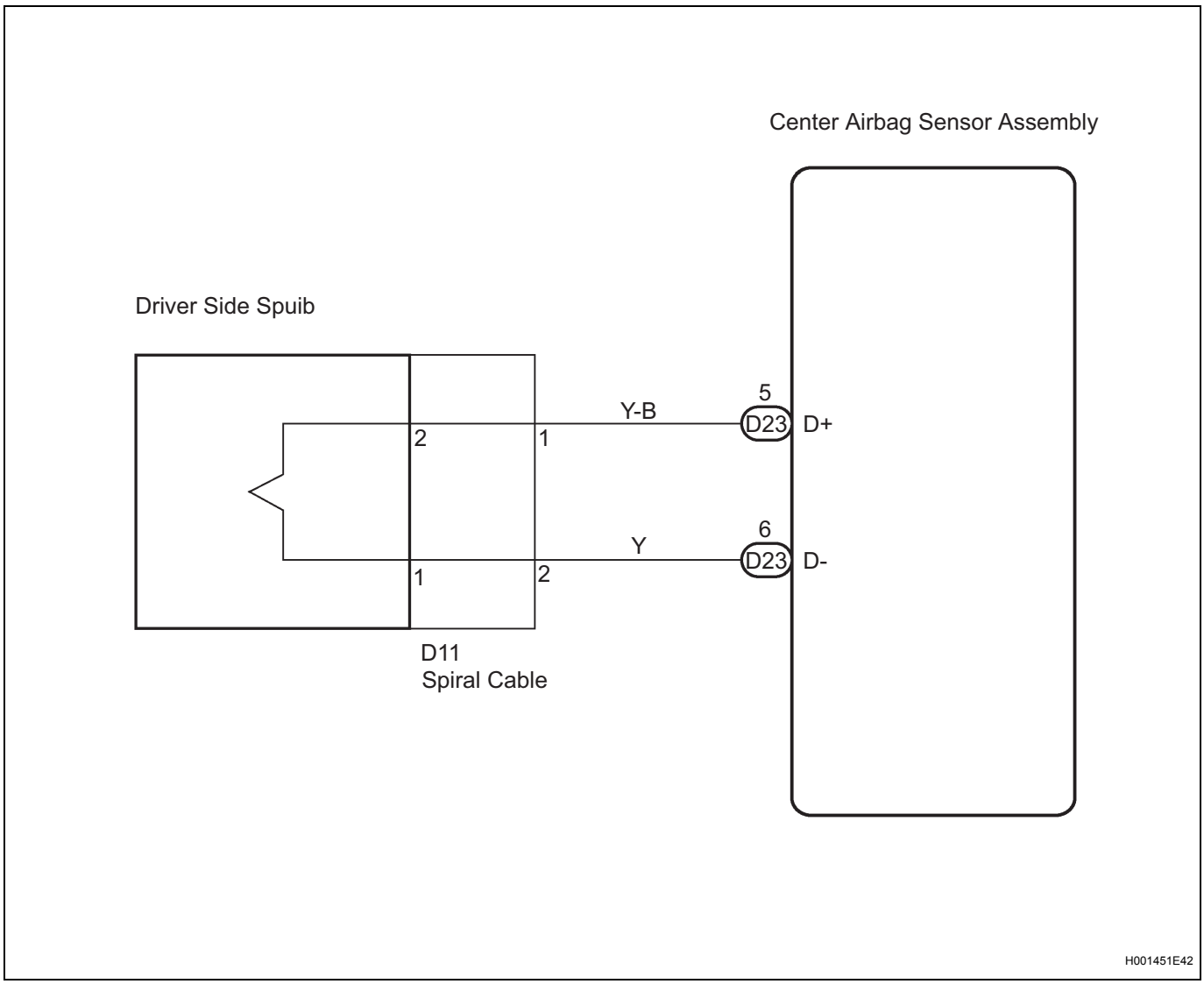

INSPECTION PROCEDURE

HINT:

- Perform the simulation method by selecting the "check mode" (signal check) with the intelligent tester (See page RS-37).
- After selecting the "check mode" (signal check), perform the simulation method by wiggling each connector of the airbag system or driving the vehicle on a city or rough road (See page RS-37).

1	CHECK STEERING PAD (DRIVER SIDE SQUIB)

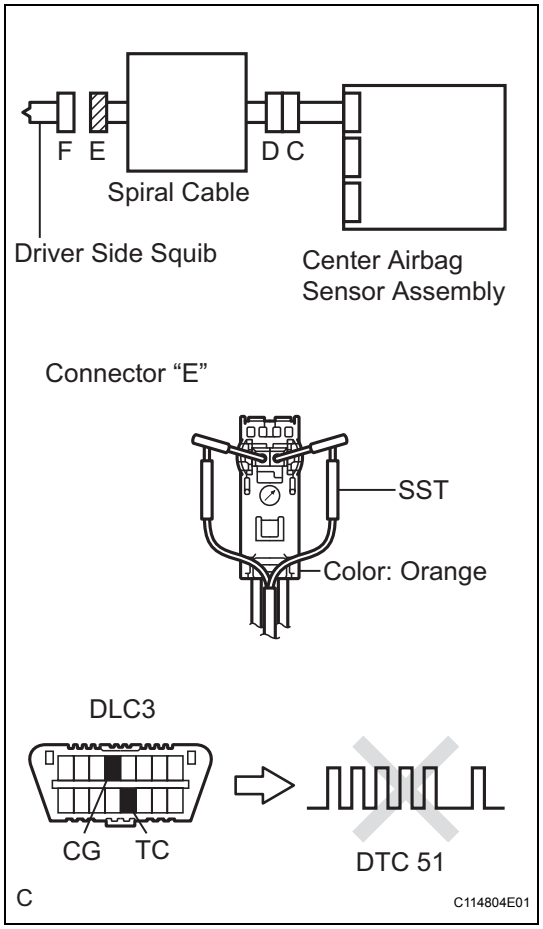

(a) Turn the ignition switch off.
(b) Disconnect the negative (-) terminal cable from the battery, and wait for at least 90 seconds.
(c) Disconnect the connectors from the steering pad.
(d) Connect the white wire side of SST (resistance 2.1 Ω) to connector "E" (orange connector).
CAUTION:
Never connect a tester to the steering pad (driver side squib) for measurement, as this may lead to a serious injury due to airbag deployment.
NOTICE:
- **Do not forcibly insert the SST into the terminals of the connector when connecting.**
- **Insert straight the SST into the terminals of the connector.**

SST 09843-18060

(e) Connect the negative (-) terminal cable to the battery, and wait for at least 2 seconds.
(f) Turn the ignition switch on (IG), and wait for at least 60 seconds.
(g) Clear the DTCs stored in memory (See page RS-34).
(h) Turn the ignition switch off.
(i) Turn the ignition switch on (IG), and wait for at least 60 seconds.
(j) Check the DTCs (See page RS-34).
OK:
DTC B1800, B1801, B1802, B1803 or 51 is not output.
HINT:
Codes other than DTC B1800, B1801, B1802, B1803 and 51 may be output at this time, but they are not related to this check.

OK → **REPLACE STEERING PAD**

NG

2	CHECK CONNECTOR

(a) Turn the ignition switch off.
(b) Disconnect the negative (-) terminal cable from the battery, and wait for at least 90 seconds.
(c) Disconnect the SST from connector "E".
(d) Check that the spiral cable connectors (on the steering pad side) are not damaged.
OK:
The lock button is not disengaged, or the claw of the lock is not deformed or damaged.

NG → **REPLACE SPIRAL CABLE**

RS

OK

3 CHECK DRIVER SIDE SQUIB CIRCUIT

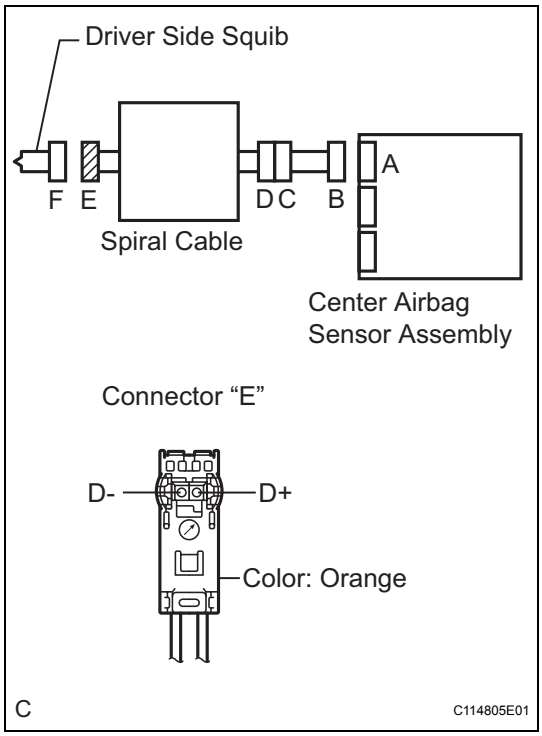

(a) Disconnect the connectors from the center airbag sensor assembly.

(b) Check for a short to B+ in the circuit.
  (1) Connect the negative (-) terminal cable to the battery, and wait for at least 2 seconds.
  (2) Turn the ignition switch on (IG).
  (3) Measure the voltage according to the value(s) in the table below.
  Standard voltage

Tester connection	Condition	Specified condition
D+ - Body ground	Ignition switch on (IG)	Below 1 V
D- - Body ground	Ignition switch on (IG)	Below 1 V

(c) Check for an open in the circuit.
  (1) Turn the ignition switch off.
  (2) Disconnect the negative (-) terminal cable from the battery, and wait for at least 90 seconds.
  (3) Measure the resistance according to the value(s) in the table below.
  Standard resistance

Tester connection	Condition	Specified condition
D+ - D-	Always	Below 1 Ω

(d) Check for a short to ground in the circuit.
  (1) Measure the resistance according to the value(s) in the table below.
  Standard resistance

Tester connection	Condition	Specified condition
D+ - Body ground	Always	1 MΩ or higher
D- - Body ground	Always	1 MΩ or higher

(e) Check for a short in the circuit.
  (1) Release the activation prevention mechanism built into connector "B" (See page RS-28).
  (2) Measure the resistance according to the value(s) in the table below.
  Standard resistance

Tester connection	Condition	Specified condition
D+ - D-	Always	1 MΩ or higher

NG → **Go to step 5**

OK

4 CHECK CENTER AIRBAG SENSOR ASSEMBLY

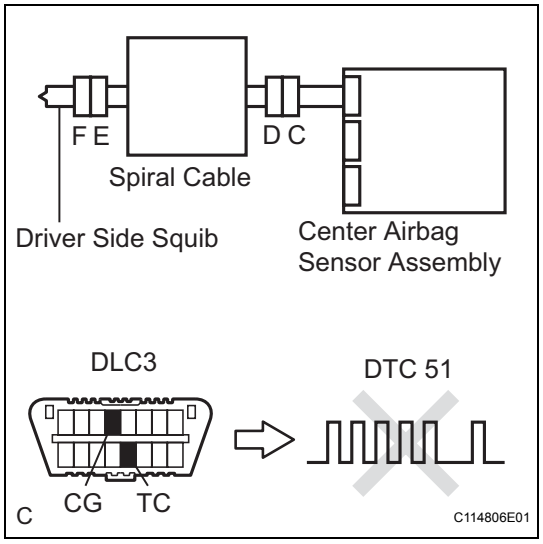

(a) Connect the connectors to the steering pad and the center airbag sensor assembly.
(b) Connect the negative (-) terminal cable to the battery, and wait for at least 2 seconds.
(c) Turn the ignition switch on (IG), and wait for at least 60 seconds.
(d) Clear the DTCs stored in memory (See page RS-34).
(e) Turn the ignition switch off.
(f) Turn the ignition switch on (IG), and wait for at least 60 seconds.
(g) Check the DTCs (See page RS-34).

OK:

DTC B1800, B1801, B1802, B1803 or 51 is not output.

HINT:

Codes other than DTC B1800, B1801, B1802, B1803 and 51 may be output at this time, but they are not related to this check.

NG → **REPLACE CENTER AIRBAG SENSOR ASSEMBLY**

OK

USE SIMULATION METHOD TO CHECK

5 CHECK INSTRUMENT PANEL WIRE

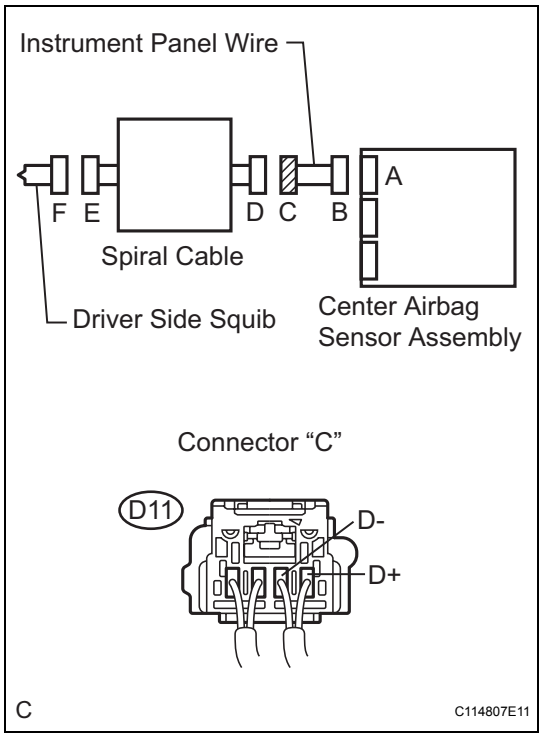

(a) Restore the released activation prevention mechanism of connector "B" to the original condition.
(b) Disconnect the instrument panel wire connector from the spiral cable.
(c) Check for a short to B+ in the circuit.
  (1) Connect the negative (-) terminal cable to the battery, and wait for at least 2 seconds.
  (2) Turn the ignition switch on (IG).
  (3) Measure the voltage according to the value(s) in the table below.

Standard voltage

Tester connection	Condition	Specified condition
D11-1 (D+) - Body ground	Ignition switch on (IG)	Below 1 V
D11-2 (D-) - Body ground	Ignition switch on (IG)	Below 1 V

(d) Check for an open in the circuit.
  (1) Turn the ignition switch off.
  (2) Disconnect the negative (-) terminal cable from the battery, and wait for at least 90 seconds.
  (3) Measure the resistance according to the value(s) in the table below.

RS

Standard resistance

Tester connection	Condition	Specified condition
D11-1 (D+) - D11-2 (D-)	Always	Below 1 Ω

(e) Check for a short to ground in the circuit.
(1) Measure the resistance according to the value(s) in the table below.
Standard resistance

Tester connection	Condition	Specified condition
D11-1 (D+) - Body ground	Always	1 MΩ or higher
D11-2 (D-) - Body ground	Always	1 MΩ or higher

(f) Check for a short in the circuit.
(1) Release the activation prevention mechanism built into connector "B" (See page RS-28).
(2) Measure the resistance according to the value(s) in the table below.
Standard resistance

Tester connection	Condition	Specified condition
D11-1 (D+) - D11-2 (D-)	Always	1 MΩ or higher

NG → **REPAIR OR REPLACE INSTRUMENT PANEL WIRE**

OK

6 CHECK SPIRAL CABLE

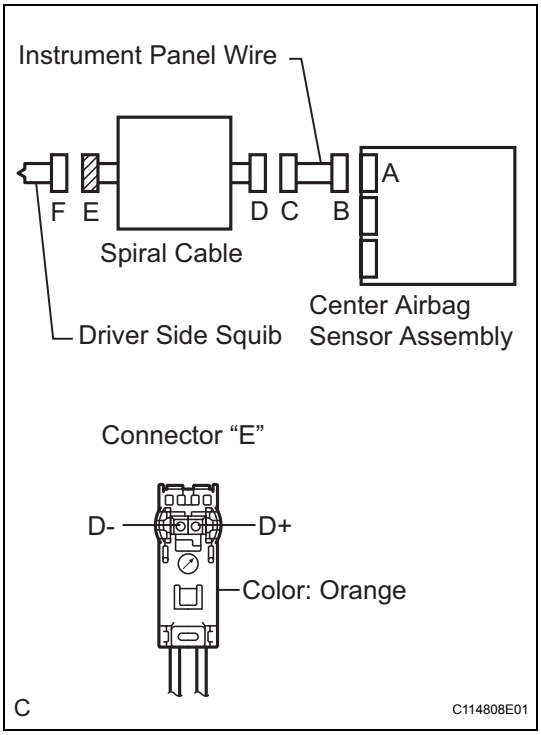

(a) Check for a short to B+ in the circuit.
(1) Connect the negative (-) terminal cable to the battery, and wait for at least 2 seconds.
(2) Turn the ignition switch on (IG).
(3) Measure the voltage according to the value(s) in the table below.
Standard voltage

Tester connection	Condition	Specified condition
D+ - Body ground	Ignition switch on (IG)	Below 1 V
D- - Body ground	Ignition switch on (IG)	Below 1 V

(b) Check for an open in the circuit.
(1) Turn the ignition switch off.
(2) Disconnect the negative (-) terminal cable from the battery, and wait for at least 90 seconds.
(3) Measure the resistance according to the value(s) in the table below.
Standard resistance

Tester connection	Condition	Specified condition
D+ - D-	Always	Below 1 Ω

(c) Check for a short to ground in the circuit.
(1) Measure the resistance according to the value(s) in the table below.

RS

Standard resistance

Tester connection	Condition	Specified condition
D+ - Body ground	Always	1 MΩ or higher
D- - Body ground	Always	1 MΩ or higher

(d) Check for a short in the circuit.
(1) Release the activation prevention mechanism built into connector "D" (See page RS-28).
(2) Measure the resistance according to the value(s) in the table below.

Standard resistance

Tester connection	Condition	Specified condition
D+ - D-	Always	1 MΩ or higher

NG → **REPLACE SPIRAL CABLE**

OK

USE SIMULATION METHOD TO CHECK

DTC	B1805/52	Short in Front Passenger Side Squib Circuit

DTC	B1806/52	Open in Front Passenger Side Squib Circuit

DTC	B1807/52	Short to GND in Front Passenger Side Squib Circuit

DTC	B1808/52	Short to B+ in Front Passenger Side Squib Circuit

DESCRIPTION

The front passenger side squib circuit consists of the center airbag sensor assembly and the front passenger airbag assembly.
The circuit instructs the SRS to deploy when deployment conditions are met.
These DTCs are recorded when a malfunction is detected in the front passenger side squib circuit.

DTC No.	DTC Detection Condition	Trouble Area
B1805/52	• The center airbag sensor assembly receives a line short circuit signal 5 times in the front passenger side squib circuit during primary check. • Front passenger side squib malfunction • Center airbag sensor assembly malfunction	• Instrument panel wire • Instrument panel wire assembly • Front passenger airbag assembly (Front passenger side squib) • Center airbag sensor assembly
B1806/52	• The center airbag sensor assembly receives an open circuit signal in the front passenger side squib circuit for 2 seconds. • Front passenger side squib malfunction • Center airbag sensor assembly malfunction	• Instrument panel wire • Instrument panel wire assembly • Front passenger airbag assembly (Front passenger side squib) • Center airbag sensor assembly
B1807/52	• The center airbag sensor assembly receives a short circuit to ground signal in the front passenger side squib circuit for 0.5 seconds. • Front passenger side squib malfunction • Center airbag sensor assembly malfunction	• Instrument panel wire • Instrument panel wire assembly • Front passenger airbag assembly (Front passenger side squib) • Center airbag sensor assembly
B1808/52	• The center airbag sensor assembly receives a short circuit to B+ signal in the front passenger side squib circuit for 0.5 seconds. • Front passenger side squib malfunction • Center airbag sensor assembly malfunction	• Instrument panel wire • Instrument panel wire assembly • Front passenger airbag assembly (Front passenger side squib) • Center airbag sensor assembly

WIRING DIAGRAM

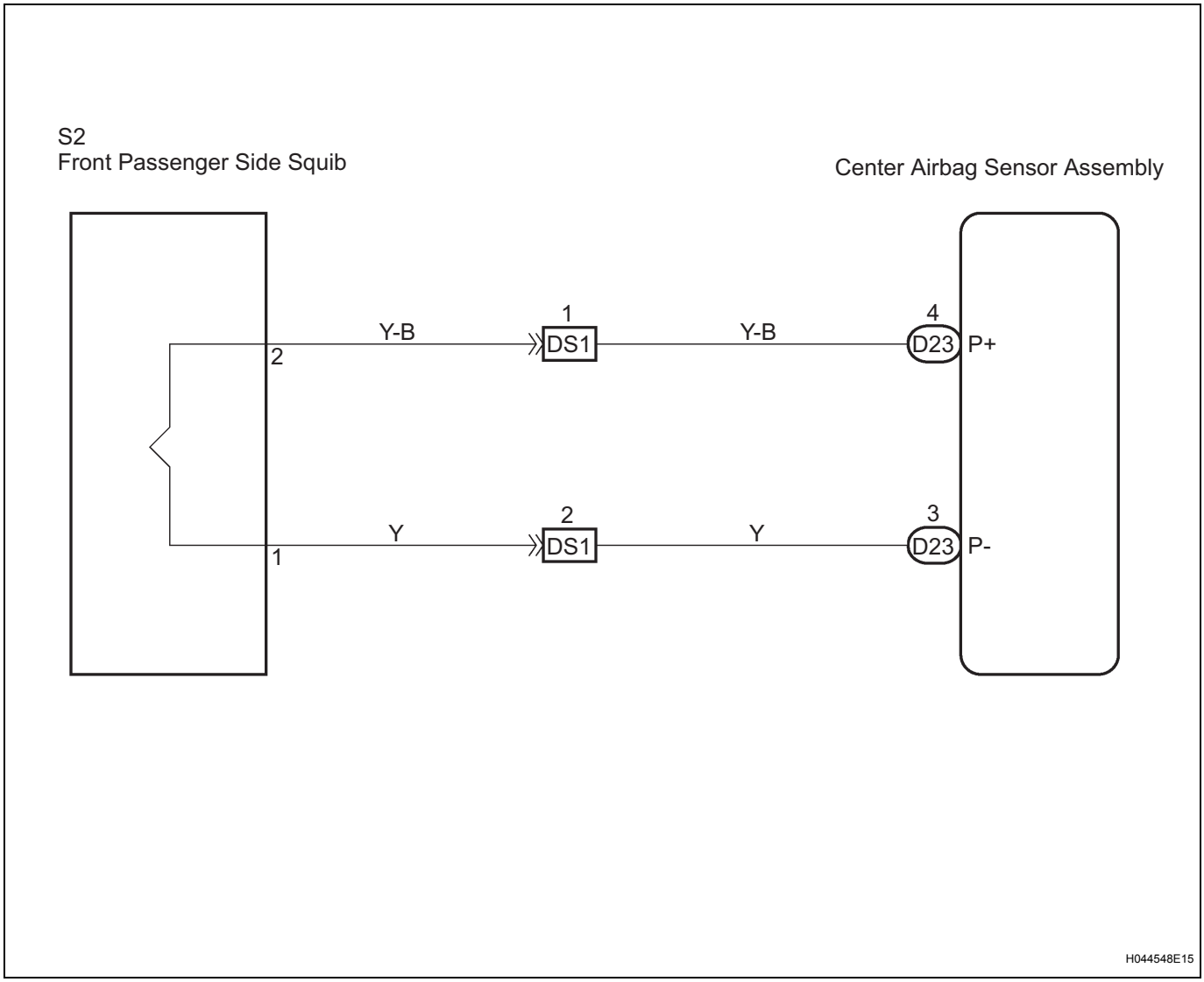

INSPECTION PROCEDURE

HINT:

- Perform the simulation method by selecting the "check mode" (signal check) with the intelligent tester (See page RS-37).
- After selecting the "check mode" (signal check), perform the simulation method by wiggling each connector of the airbag system or driving the vehicle on a city or rough road (See page RS-37).

1	CHECK FRONT PASSENGER AIRBAG ASSEMBLY (FRONT PASSENGER SIDE SQUIB)

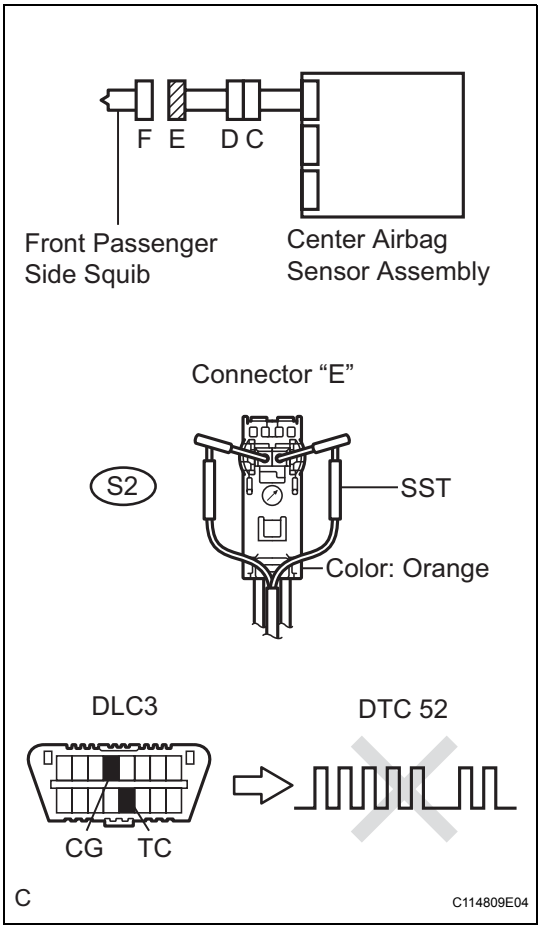

(a) Turn the ignition switch off.
(b) Disconnect the negative (-) terminal cable from the battery, and wait for at least 90 seconds.
(c) Disconnect the connectors from the front passenger airbag assembly.
(d) Connect the white wire side of SST (resistance 2.1 Ω) to connector "E" (orange connector).
CAUTION:
Never connect a tester to the front passenger airbag assembly (front passenger side squib) for measurement, as this may lead to a serious injury due to airbag deployment.
NOTICE:
- **Do not forcibly insert the SST into the terminals of the connector when connecting.**
- **Insert straight the SST into the terminals of the connector.**

SST 09843-18060

(e) Connect the negative (-) terminal cable to the battery, and wait for at least 2 seconds.
(f) Turn the ignition switch on (IG), and wait for at least 60 seconds.
(g) Clear the DTCs stored in memory (See page RS-34).
(h) Turn the ignition switch off.
(i) Turn the ignition switch on (IG), and wait for at least 60 seconds.
(j) Check the DTCs (See page RS-34).
OK:
DTC B1805, B1806, B1807, B1808 or 52 is not output.
HINT:
Codes other than DTC B1805, B1806, B1807, B1808 and 52 may be output at this time, but they are not related to this check.

OK → **REPLACE FRONT PASSENGER AIRBAG ASSEMBLY**

NG

2	CHECK CONNECTOR

(a) Turn the ignition switch off.
(b) Disconnect the negative (-) terminal cable from the battery, and wait for at least 90 seconds.
(c) Disconnect the SST from connector "E".
(d) Check that the instrument panel wire assembly connectors (on the front passenger airbag assembly side) are not damaged.

OK:
The lock button is not disengaged, or the claw of the lock is not deformed or damaged.

NG → **REPAIR OR REPLACE INSTRUMENT PANEL WIRE ASSEMBLY**

OK

3 CHECK FRONT PASSENGER SIDE SQUIB CIRCUIT

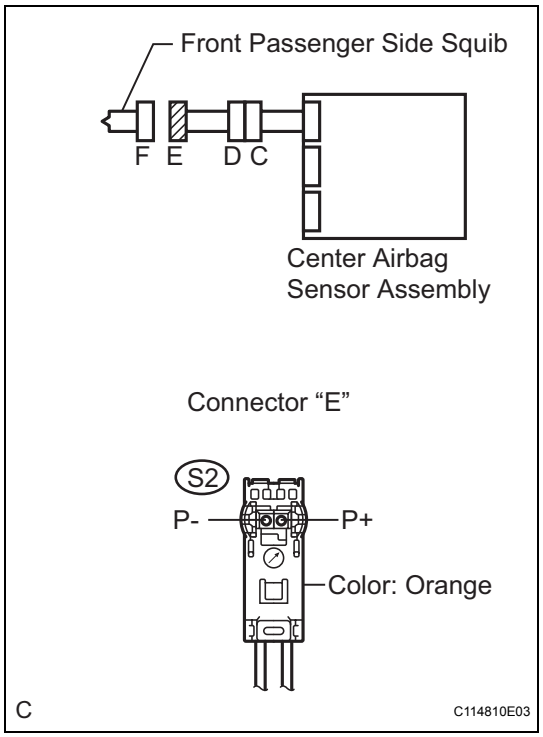

(a) Disconnect the connectors from the center airbag sensor assembly.

(b) Check for a short to B+ in the circuit.
  (1) Connect the negative (-) terminal cable to the battery, and wait for at least 2 seconds.
  (2) Turn the ignition switch on (IG).
  (3) Measure the voltage according to the value(s) in the table below.
  Standard voltage

Tester connection	Condition	Specified condition
S2-2 (P+) - Body ground	Ignition switch on (IG)	Below 1 V
S2-1 (P-) - Body ground	Ignition switch on (IG)	Below 1 V

(c) Check for an open in the circuit.
  (1) Turn the ignition switch off.
  (2) Disconnect the negative (-) terminal cable from the battery, and wait for at least 90 seconds.
  (3) Measure the resistance according to the value(s) in the table below.
  Standard resistance

Tester connection	Condition	Specified condition
S2-2 (P+) - S2-1 (P-)	Always	Below 1 Ω

(d) Check for a short to ground in the circuit.
  (1) Measure the resistance according to the value(s) in the table below.
  Standard resistance

Tester connection	Condition	Specified condition
S2-2 (P+) - Body ground	Always	1 MΩ or higher
S2-1 (P-) - Body ground	Always	1 MΩ or higher

(e) Check for a short in the circuit.
  (1) Release the activation prevention mechanism built into connector "B" (See page RS-28).
  (2) Measure the resistance according to the value(s) in the table below.
  Standard resistance

Tester connection	Condition	Specified condition
S2-2 (P+) - S2-1 (P-)	Always	1 MΩ or higher

NG → **Go to step 5**

RS

OK

4	CHECK CENTER AIRBAG SENSOR ASSEMBLY

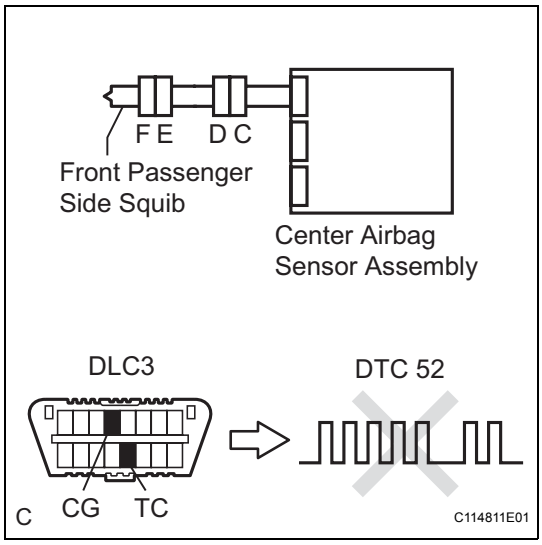

(a) Connect the connectors to the front passenger airbag assembly and the center airbag sensor assembly.
(b) Connect the negative (-) terminal cable to the battery, and wait for at least 2 seconds.
(c) Turn the ignition switch on (IG), and wait for at least 60 seconds.
(d) Clear the DTCs stored in memory (See page RS-34).
(e) Turn the ignition switch off.
(f) Turn the ignition switch on (IG), and wait for at least 60 seconds.
(g) Check the DTCs (See page RS-34).

OK:

DTC B1805, B1806, B1807, B1808 or 52 is not output.

HINT:

Codes other than DTC B1805, B1806, B1807, B1808 and 52 may be output at this time, but they are not related to this check.

NG → **REPLACE CENTER AIRBAG SENSOR ASSEMBLY**

OK

USE SIMULATION METHOD TO CHECK

5 CHECK INSTRUMENT PANEL WIRE

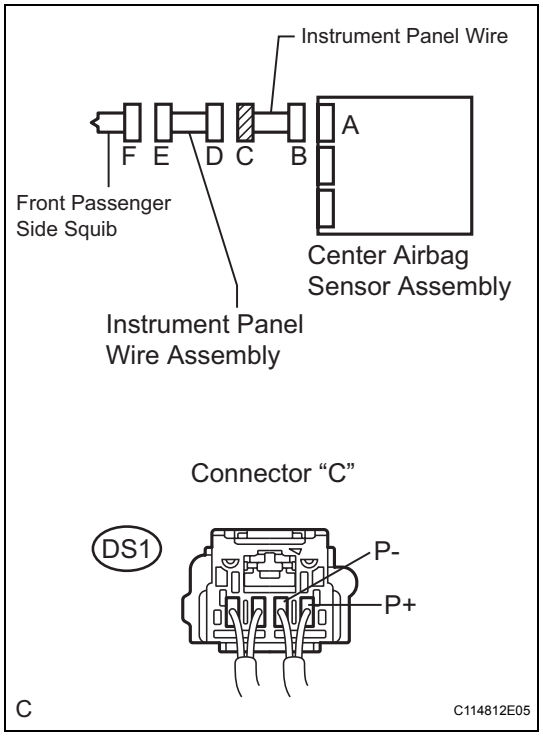

(a) Restore the released activation prevention mechanism of connector "B" to the original condition.

(b) Disconnect the instrument panel wire connector from the instrument panel wire assembly.

(c) Check for a short to B+ in the circuit.

(1) Connect the negative (-) terminal cable to the battery, and wait for at least 2 seconds.

(2) Turn the ignition switch on (IG).

(3) Measure the voltage according to the value(s) in the table below.

Standard voltage

Tester connection	Condition	Specified condition
DS1-1 (P+) - Body ground	Ignition switch on (IG)	Below 1 V
DS1-2 (P-) - Body ground	Ignition switch on (IG)	Below 1 V

(d) Check for an open in the circuit.

(1) Turn the ignition switch off.

(2) Disconnect the negative (-) terminal cable from the battery, and wait for at least 90 seconds.

(3) Measure the resistance according to the value(s) in the table below.

Standard resistance

Tester connection	Condition	Specified condition
DS1-1 (P+) - DS1-2 (P-)	Always	Below 1 Ω

(e) Check for a short to ground in the circuit.

(1) Measure the resistance according to the value(s) in the table below.

Standard resistance

Tester connection	Condition	Specified condition
DS1-1 (P+) - Body ground	Always	1 MΩ or higher
DS1-2 (P-) - Body ground	Always	1 MΩ or higher

(f) Check for a short in the circuit.

(1) Release the activation prevention mechanism built into connector "B" (See page RS-28).

(2) Measure the resistance according to the value(s) in the table below.

Standard resistance

Tester connection	Condition	Specified condition
DS1-1 (P+) - DS1-2 (P-)	Always	1 MΩ or higher

NG → **REPAIR OR REPLACE INSTRUMENT PANEL WIRE**

OK

6	CHECK INSTRUMENT PANEL WIRE ASSEMBLY

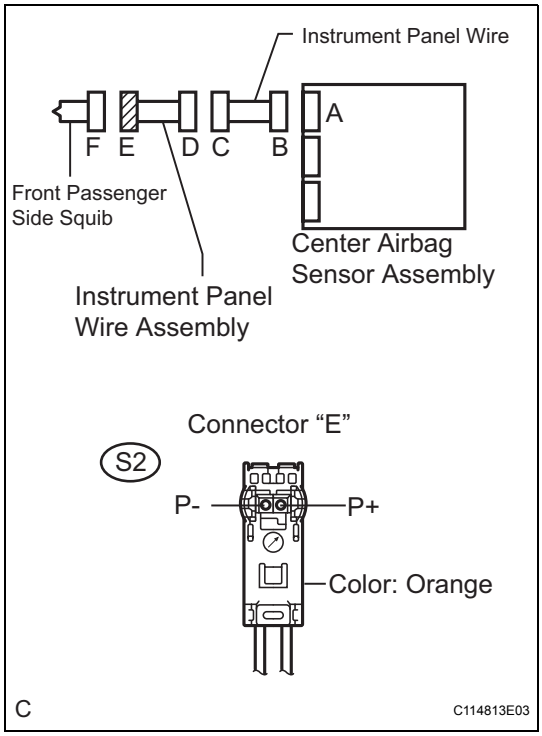

(a) Check for a short to B+ in the circuit.
  (1) Connect the negative (-) terminal cable to the battery, and wait for at least 2 seconds.
  (2) Turn the ignition switch on (IG).
  (3) Measure the voltage according to the value(s) in the table below.

Standard voltage

Tester connection	Condition	Specified condition
S2-2 (P+) - Body ground	Ignition switch on (IG)	Below 1 V
S2-1 (P-) - Body ground	Ignition switch on (IG)	Below 1 V

(b) Check for an open in the circuit.
  (1) Turn the ignition switch off.
  (2) Disconnect the negative (-) terminal cable from the battery, and wait for at least 90 seconds.
  (3) Measure the resistance according to the value(s) in the table below.

Standard resistance

Tester connection	Condition	Specified condition
S2-2 (P+) - S2-1 (P-)	Always	Below 1 Ω

(c) Check for a short to ground in the circuit.
  (1) Measure the resistance according to the value(s) in the table below.

Standard resistance

Tester connection	Condition	Specified condition
S2-2 (P+) - Body ground	Always	1 MΩ or higher
S2-1 (P-) - Body ground	Always	1 MΩ or higher

(d) Check for a short in the circuit.
  (1) Release the activation prevention mechanism built into connector "D" (See page RS-28).
  (2) Measure the resistance according to the value(s) in the table below.

Standard resistance

Tester connection	Condition	Specified condition
S2-2 (P+) - S2-1 (P-)	Always	1 MΩ or higher

NG → **REPAIR OR REPLACE INSTRUMENT PANEL WIRE ASSEMBLY**

OK

USE SIMULATION METHOD TO CHECK

DTC	B1810/53	Short in Driver Side Squib 2nd Step Circuit

DTC	B1811/53	Open in Driver Side Squib 2nd Step Circuit

DTC	B1812/53	Short to GND in Driver Side Squib 2nd Step Circuit

DTC	B1813/53	Short to B+ in Driver Side Squib 2nd Step Circuit

DESCRIPTION

The driver side squib 2nd step circuit consists of the center airbag sensor assembly, the spiral cable and the steering pad.
The circuit instructs the SRS to deploy when deployment conditions are met.
These DTCs are recorded when a malfunction is detected in the driver side squib 2nd step circuit.

DTC No.	DTC Detecting Condition	Trouble Area
B1810/53	• The center airbag sensor assembly receives a line short circuit signal 5 times in the driver side squib 2nd step circuit during primary check. • Driver side squib 2nd step malfunction • Spiral cable malfunction • Center airbag sensor assembly malfunction	• Instrument panel wire • Spiral cable • Steering pad (Driver side squib 2nd step) • Center airbag sensor assembly
B1811/53	• The center airbag sensor assembly receives an open circuit signal in the driver side squib 2nd step circuit for 2 seconds. • Driver side squib 2nd step malfunction • Spiral cable malfunction • Center airbag sensor assembly malfunction	• Instrument panel wire • Spiral cable • Steering pad (Driver side squib 2nd step) • Center airbag sensor assembly
B1812/53	• The center airbag sensor assembly receives a short circuit to ground signal in the driver side 2nd step circuit for 0.5 seconds. • Driver side squib 2nd step malfunction • Spiral cable malfunction • Center airbag sensor assembly malfunction	• Instrument panel wire • Spiral cable • Steering pad (Driver side squib 2nd step) • Center airbag sensor assembly
B1813/53	• The center airbag sensor assembly receives a short circuit to B+ signal in the driver side squib 2nd step circuit for 0.5 seconds. • Driver side squib 2nd step malfunction • Spiral cable malfunction • Center airbag sensor assembly malfunction	• Instrument panel wire • Spiral cable • Steering pad (Driver side squib 2nd step) • Center airbag sensor assembly

WIRING DIAGRAM

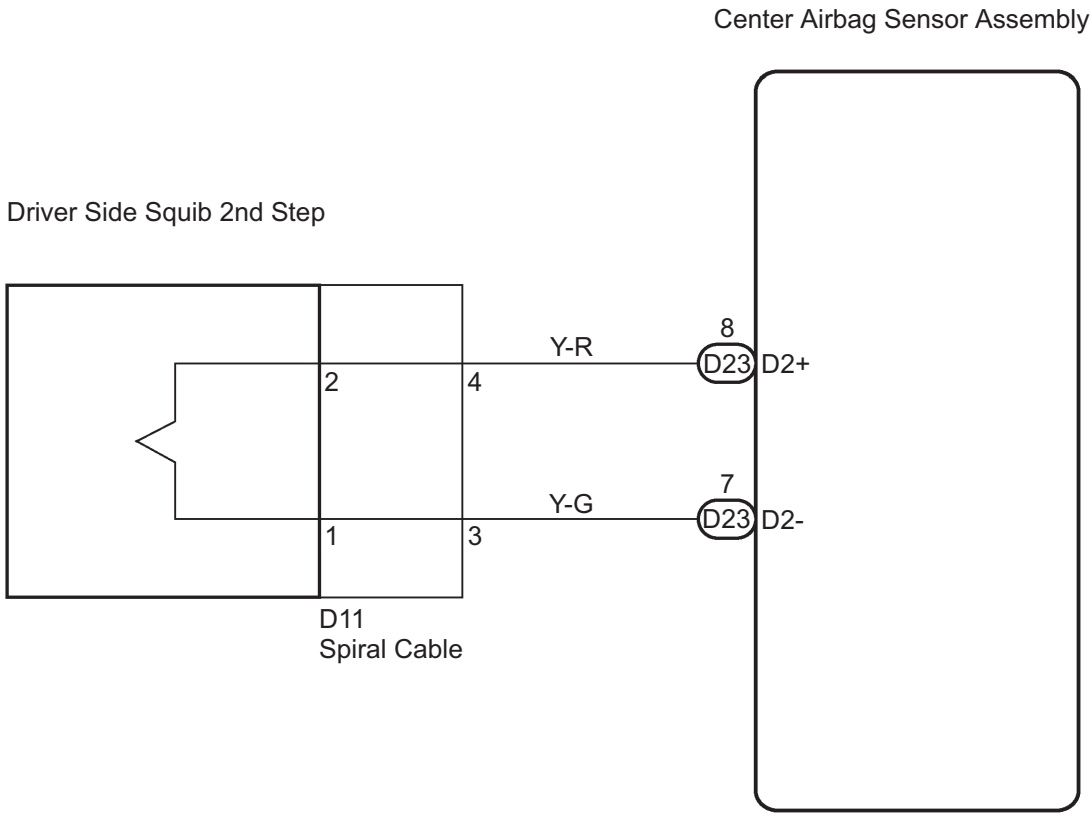

INSPECTION PROCEDURE

HINT:

- Perform the simulation method by selecting the "check mode" (signal check) with the intelligent tester (See page RS-37).
- After selecting the "check mode" (signal check), perform the simulation method by wiggling each connector of the airbag system or driving the vehicle on a city or rough road (See page RS-37).

1	CHECK STEERING PAD (DRIVER SIDE SQUIB 2ND STEP)

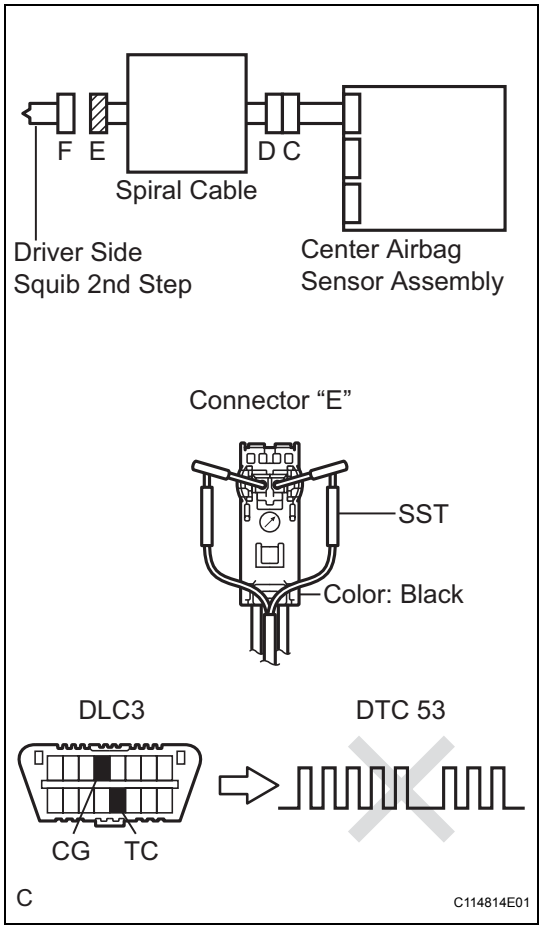

(a) Turn the ignition switch off.
(b) Disconnect the negative (-) terminal cable from the battery, and wait for at least 90 seconds.
(c) Disconnect the connectors from the steering pad.
(d) Connect the white wire side of SST (resistance 2.1 Ω) to connector "E" (black connector).
CAUTION:
Never connect a tester to the steering pad (driver side squib 2nd step) for measurement, as this may lead to a serious injury due to airbag deployment.
NOTICE:
- **Do not forcibly insert the SST into the terminals of the connector when connecting.**
- **Insert straight the SST into the terminals of the connector.**

SST 09843-18060

(e) Connect the negative (-) terminal cable to the battery, and wait for at least 2 seconds.
(f) Turn the ignition switch on (IG), and wait for at least 60 seconds.
(g) Clear the DTCs stored in memory (See page RS-34).
(h) Turn the ignition switch off.
(i) Turn the ignition switch on (IG), and wait for at least 60 seconds.
(j) Check the DTCs (See page RS-34).
OK:
DTC B1810, B1811, B1812, B1813 or 53 is not output.
HINT:
Codes other than DTC B1810, B1811, B1812, B1813, and 53 may be output at this time, but they are not related to this check.

OK → **REPLACE STEERING PAD**

NG

2	CHECK CONNECTOR

(a) Turn the ignition switch off.
(b) Disconnect the negative (-) terminal cable from the battery, and wait for at least 90 seconds.
(c) Disconnect the SST from connector "E".
(d) Check that the spiral cable connectors (on the steering pad side) are not damaged.
OK:
The lock button is not disengaged, or the claw of the lock is not deformed or damaged.

NG → **REPLACE SPIRAL CABLE**

RS

OK

3	CHECK DRIVER SIDE SQUIB 2ND STEP CIRCUIT

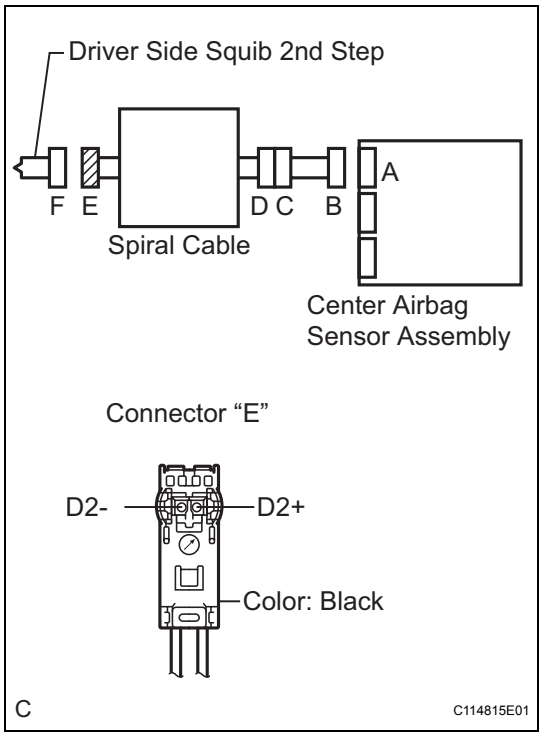

(a) Disconnect the connectors from the center airbag sensor assembly.

(b) Check for a short to B+ in the circuit.
  (1) Connect the negative (-) terminal cable to the battery, and wait for at least 2 seconds.
  (2) Turn the ignition switch on (IG).
  (3) Measure the voltage according to the value(s) in the table below.
  Standard voltage

Tester connection	Condition	Specified condition
D2+ - Body ground	Ignition switch on (IG)	Below 1 V
D2- - Body ground	Ignition switch on (IG)	Below 1 V

(c) Check for an open in the circuit.
  (1) Turn the ignition switch off.
  (2) Disconnect the negative (-) terminal cable from the battery, and wait for at least 90 seconds.
  (3) Measure the resistance according to the value(s) in the table below.
  Standard resistance

Tester connection	Condition	Specified condition
D2+ - D2-	Always	Below 1 Ω

(d) Check for a short to ground in the circuit.
  (1) Measure the resistance according to the value(s) in the table below.
  Standard resistance

Tester connection	Condition	Specified condition
D2+ - Body ground	Always	1 MΩ or higher
D2- - Body ground	Always	1 MΩ or higher

(e) Check for a short in the circuit.
  (1) Release the activation prevention mechanism built into connector "B" (See page RS-28).
  (2) Measure the resistance according to the value(s) in the table below.
  Standard resistance

Tester connection	Condition	Specified condition
D2+ - D2-	Always	1 MΩ or higher

NG → **Go to step 5**

OK

4 CHECK CENTER AIRBAG SENSOR ASSEMBLY

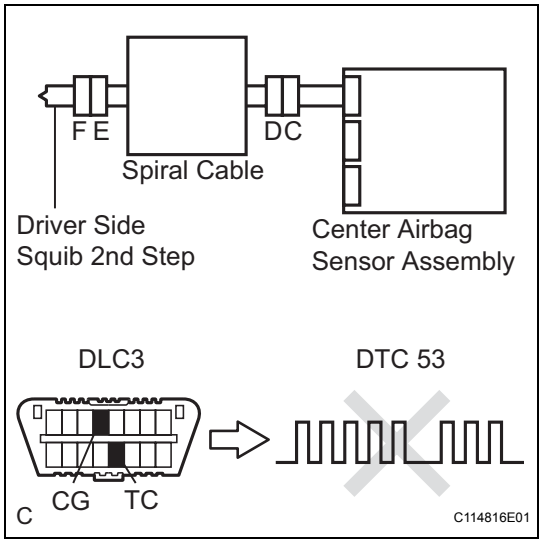

(a) Connect the connectors to the steering pad and the center airbag sensor assembly.
(b) Connect the negative (-) terminal cable to the battery, and wait for at least 2 seconds.
(c) Turn the ignition switch on (IG), and wait for at least 60 seconds.
(d) Clear the DTCs stored in memory (See page RS-34).
(e) Turn the ignition switch off.
(f) Turn the ignition switch on (IG), and wait for at least 60 seconds.
(g) Check the DTCs (See page RS-34).

OK:

DTC B1810, B1811, B1812, B1813 or 53 is not output.

HINT:

Codes other than DTC B1810, B1811, B1812, B1813 and 53 may be output at this time, but they are not related to this check.

NG → **REPLACE CENTER AIRBAG SENSOR ASSEMBLY**

OK

USE SIMULATION METHOD TO CHECK

5 CHECK INSTRUMENT PANEL WIRE

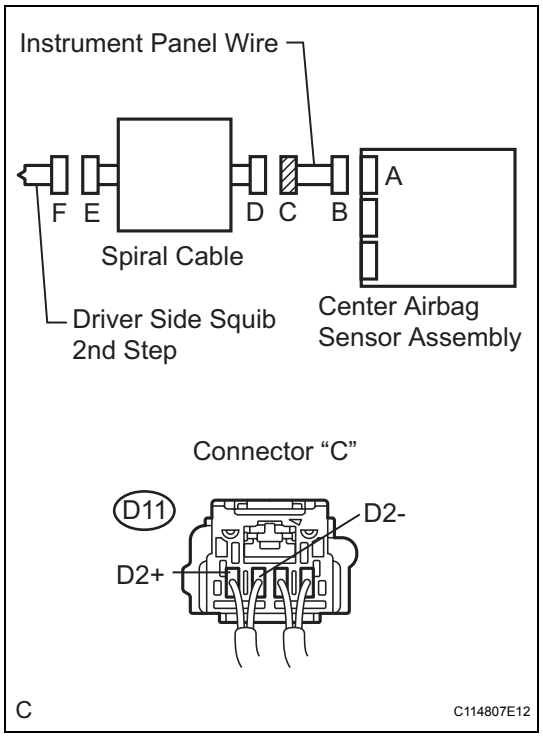

(a) Check for a short to B+ in the circuit.
  (1) Restore the released activation prevention mechanism of connector "B" to the original condition.
  (2) Disconnect the instrument panel wire connector from the spiral cable.
  (3) Connect the negative (-) terminal cable to the battery, and wait for at least 2 seconds.
  (4) Turn the ignition switch on (IG).
  (5) Measure the voltage according to the value(s) in the table below.

Standard voltage

Tester connection	Condition	Specified condition
D11-4 (D2+) - Body ground	Ignition switch on (IG)	Below 1 V
D11-3 (D2-) - Body ground	Ignition switch on (IG)	Below 1 V

(b) Check for an open in the circuit.
  (1) Turn the ignition switch off.
  (2) Disconnect the negative (-) terminal cable from the battery, and wait for at least 90 seconds.

RS

(3) Measure the resistance according to the value(s) in the table below.

Standard resistance

Tester connection	Condition	Specified condition
D11-4 (D2+) - D11-3 (D2-)	Always	Below 1 Ω

(c) Check for a short to ground in the circuit.

(1) Measure the resistance according to the value(s) in the table below.

Standard resistance

Tester connection	Condition	Specified condition
D11-4 (D2+) - Body ground	Always	1 MΩ or higher
D11-3 (D2-) - Body ground	Always	1 MΩ or higher

(d) Check for a short in the circuit.

(1) Release the activation prevention mechanism built into connector "B" (See page RS-28).

(2) Measure the resistance according to the value(s) in the table below.

Standard resistance

Tester connection	Condition	Specified condition
D11-4 (D2+) - D11-3 (D2-)	Always	1 MΩ or higher

NG → **REPAIR OR REPLACE INSTRUMENT PANEL WIRE**

OK

6 CHECK SPIRAL CABLE

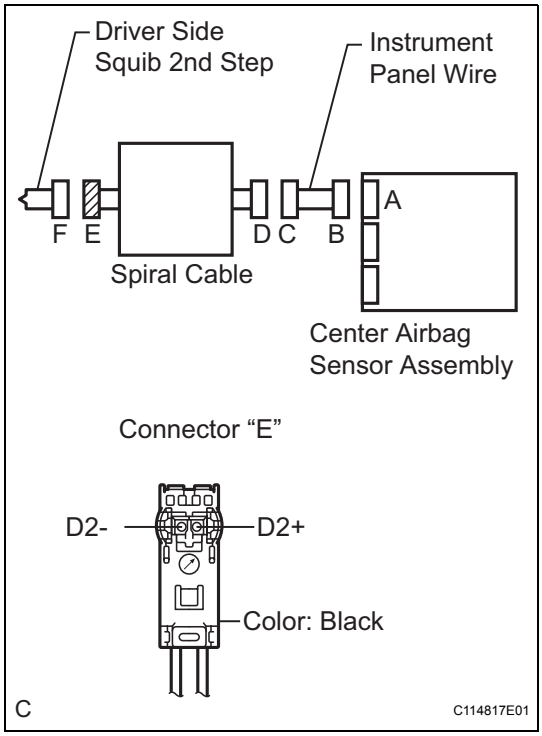

(a) Check for a short to B+ in the circuit.

(1) Connect the negative (-) terminal cable to the battery, and wait for at least 2 seconds.

(2) Turn the ignition switch on (IG).

(3) Measure the voltage according to the value(s) in the table below.

Standard voltage

Tester connection	Condition	Specified condition
D2+ - Body ground	Ignition switch on (IG)	Below 1 V
D2- - Body ground	Ignition switch on (IG)	Below 1 V

(b) Check for an open in the circuit.

(1) Turn the ignition switch off.

(2) Disconnect the negative (-) terminal cable from the battery, and wait for at least 90 seconds.

(3) Measure the resistance according to the value(s) in the table below.

Standard resistance

Tester connection	Condition	Specified condition
D2+ - D2-	Always	Below 1 Ω

(c) Check for a short to ground in the circuit.

RS

(1) Measure the resistance according to the value(s) in the table below.

Standard resistance

Tester connection	Condition	Specified condition
D2+ - Body ground	Always	1 MΩ or higher
D2- - Body ground	Always	1 MΩ or higher

(d) Check for a short in the circuit.

(1) Release the activation prevention mechanism built into connector "D" (See page RS-28).

(2) Measure the resistance according to the value(s) in the table below.

Standard resistance

Tester connection	Condition	Specified condition
D2+ - D2-	Always	1 MΩ or higher

NG → **REPLACE SPIRAL CABLE**

OK

USE SIMULATION METHOD TO CHECK

DTC	B1815/54	Short in Front Passenger Side Squib 2nd Step Circuit

DTC	B1816/54	Open in Front Passenger Side Squib 2nd Step Circuit

DTC	B1817/54	Short to GND in Front Passenger Side Squib 2nd Step Circuit

DTC	B1818/54	Short to B+ in Front Passenger Side Squib 2nd Step Circuit

DESCRIPTION

The front passenger side squib 2nd step circuit consists of the center airbag sensor assembly and the front passenger airbag assembly.
The circuit instructs the SRS to deploy when deployment conditions are met.
These DTCs are recorded when a malfunction is detected in the front passenger side squib 2nd step circuit.

DTC No.	DTC Detecting Condition	Trouble Area
B1815/54	• The center airbag sensor assembly receives a line short circuit signal 5 times in the front passenger side squib 2nd step circuit during primary check. • Front passenger side squib 2nd step malfunction • Center airbag sensor assembly malfunction	• Instrument panel wire • Instrument panel wire assembly • Front passenger airbag assembly (Front passenger side squib 2nd step) • Center airbag sensor assembly
B1816/54	• The center airbag sensor assembly receives an open circuit signal in the front passenger side squib 2nd step circuit for 2 seconds. • Front passenger side squib 2nd step malfunction • Center airbag sensor assembly malfunction	• Instrument panel wire • Instrument panel wire assembly • Front passenger airbag assembly (Front passenger side squib 2nd step) • Center airbag sensor assembly
B1817/54	• The center airbag sensor assembly receives a short circuit to ground signal in the front passenger side squib 2nd step circuit for 0.5 seconds. • Front passenger side squib 2nd step malfunction • Center airbag sensor assembly malfunction	• Instrument panel wire • Instrument panel wire assembly • Front passenger airbag assembly (Front passenger side squib 2nd step) • Center airbag sensor assembly
B1818/54	• The center airbag sensor assembly receives a short circuit to B+ signal in the front passenger side squib 2nd step circuit for 0.5 seconds. • Front passenger side squib 2nd step malfunction • Center airbag sensor assembly malfunction	• Instrument panel wire • Instrument panel wire assembly • Front passenger airbag assembly (Front passenger side squib 2nd step) • Center airbag sensor assembly

WIRING DIAGRAM

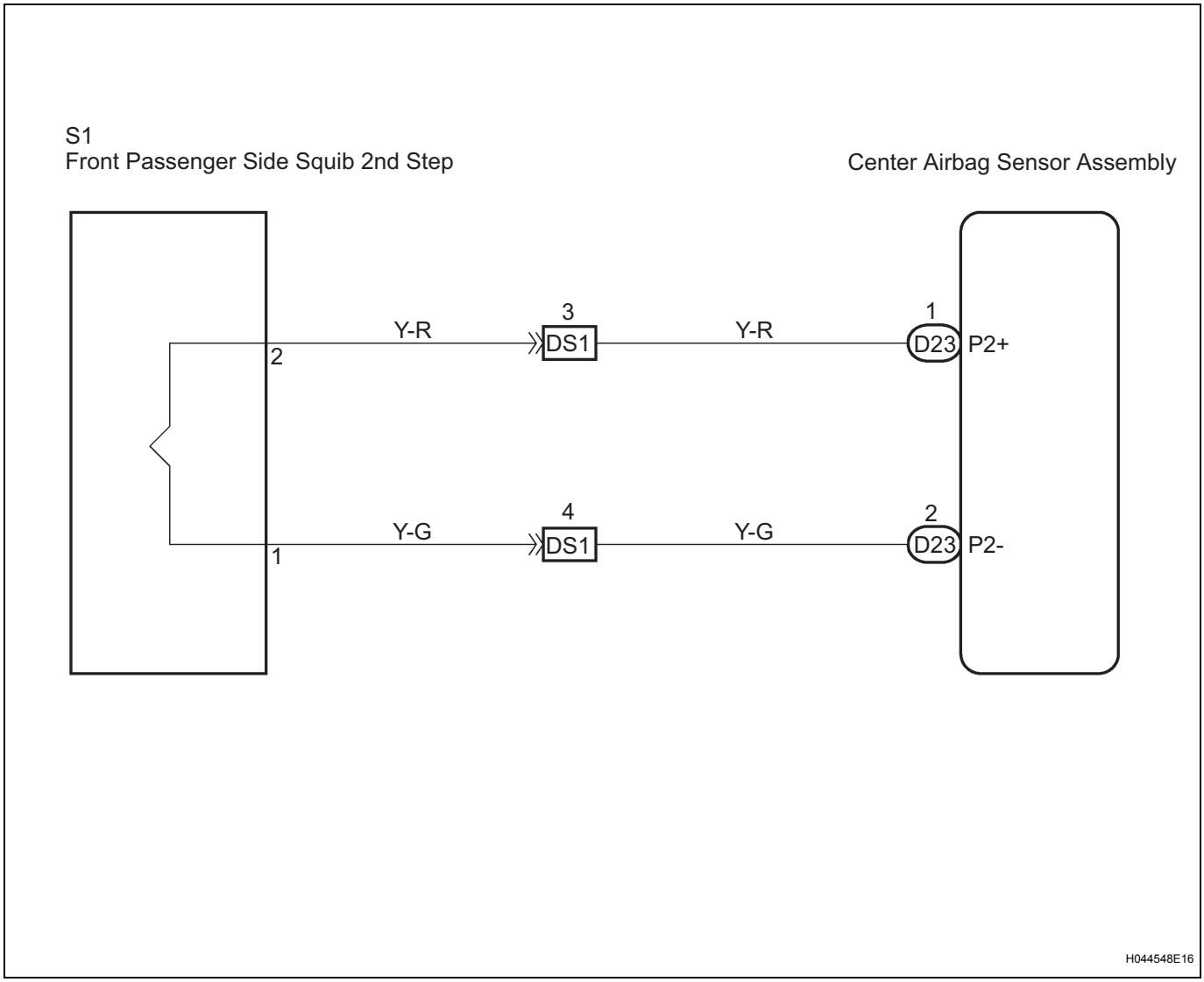

INSPECTION PROCEDURE

HINT:

- Perform the simulation method by selecting the "check mode" (signal check) with the intelligent tester (See page RS-37).
- After selecting the "check mode" (signal check), perform the simulation method by wiggling each connector of the airbag system or driving the vehicle on a city or rough road (See page RS-37).

1	CHECK FRONT PASSENGER AIRBAG ASSEMBLY (FRONT PASSENGER SIDE SQUIB 2ND STEP)

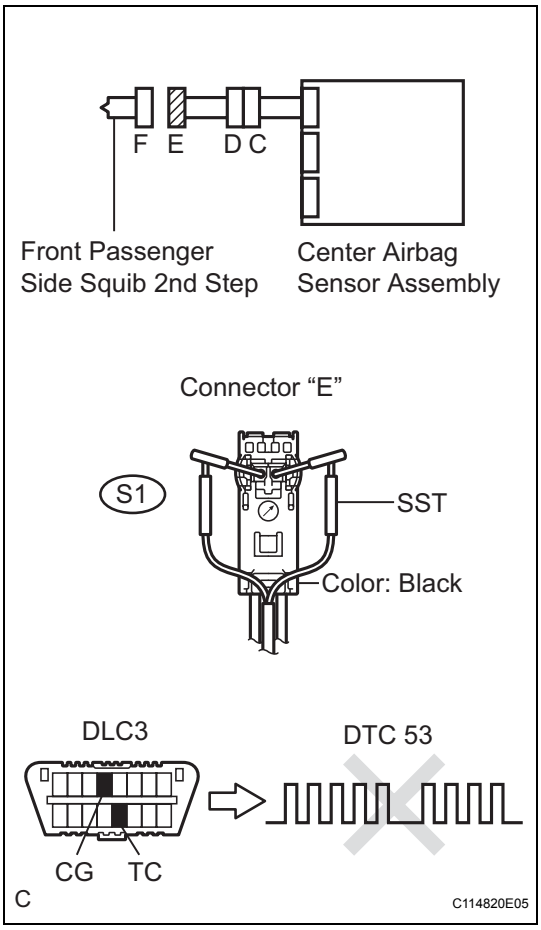

(a) Turn the ignition switch off.
(b) Disconnect the negative (-) terminal cable from the battery, and wait for at least 90 seconds.
(c) Disconnect the connectors from the front passenger airbag assembly.
(d) Connect the white wire side of SST (resistance 2.1 Ω) to connector "E" (black connector).
CAUTION:
Never connect a tester to the front passenger airbag assembly (front passenger side squib 2nd step) for measurement, as this may lead to a serious injury due to airbag deployment.
NOTICE:
- **Do not forcibly insert the SST into the terminals of the connector when connecting.**
- **Insert straight the SST into the terminals of the connector.**

SST 09843-18060

(e) Connect the negative (-) terminal cable to the battery, and wait for at least 2 seconds.
(f) Turn the ignition switch on (IG), and wait for at least 60 seconds.
(g) Clear the DTCs stored in memory (See page RS-34).
(h) Turn the ignition switch off.
(i) Turn the ignition switch on (IG), and wait for at least 60 seconds.
(j) Check the DTCs (See page RS-34).
OK:
DTC B1815, B1816, B1817, B1818 or 54 is not output.
HINT:
Codes other than DTC B1815, B1816, B1817, B1818 and 54 may be output at this time, but they are not related to this check.

OK → **REPLACE FRONT PASSENGER AIRBAG ASSEMBLY**

NG

2	CHECK CONNECTOR

(a) Turn the ignition switch off.
(b) Disconnect the negative (-) terminal cable from the battery, and wait for at least 90 seconds.
(c) Disconnect the SST from connector "E".
(d) Check that the instrument panel wire assembly connectors (on the front passenger airbag assembly side) are not damaged.

OK:
The lock button is not disengaged, or the claw of the lock is not damaged or deformed.

NG → **REPAIR OR REPLACE INSTRUMENT PANEL WIRE ASSEMBLY**

OK

3 CHECK FRONT PASSENGER SIDE SQUIB 2ND STEP CIRCUIT

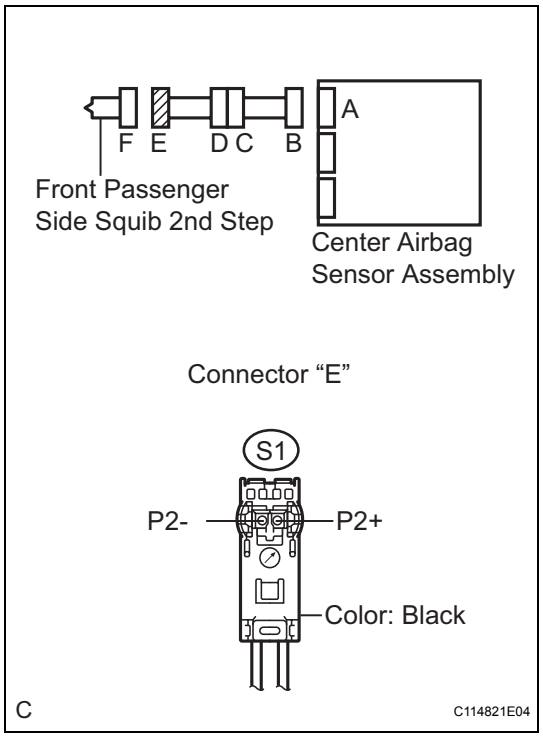

(a) Disconnect the connectors from the center airbag sensor assembly.

(b) Check for a short to B+ in the circuit.
  (1) Connect the negative (-) terminal cable to the battery, and wait for at least 2 seconds.
  (2) Turn the ignition switch on (IG).
  (3) Measure the voltage according to the value(s) in the table below.
  Standard voltage

Tester connection	Condition	Specified condition
S1-2 (P2+) - Body ground	Ignition switch on (IG)	Below 1 V
S1-1 (P2-) - Body ground	Ignition switch on (IG)	Below 1 V

(c) Check for an open in the circuit.
  (1) Turn the ignition switch off.
  (2) Disconnect the negative (-) terminal cable from the battery, and wait for at least 90 seconds.
  (3) Measure the resistance according to the value(s) in the table below.
  Standard resistance

Tester connection	Condition	Specified condition
S1-2 (P2+) - S1-1 (P2-)	Always	Below 1 Ω

(d) Check for a short to ground in the circuit.
  (1) Measure the resistance according to the value(s) in the table below.
  Standard resistance

Tester connection	Condition	Specified condition
S1-2 (P2+) - Body ground	Always	1 MΩ or higher
S1-1 (P2-) - Body ground	Always	1 MΩ or higher

(e) Check for a short in the circuit.
  (1) Release the activation prevention mechanism built into connector "B" (See page RS-28).
  (2) Measure the resistance according to the value(s) in the table below.
  Standard resistance

Tester connection	Condition	Specified condition
S1-2 (P2+) - S1-1 (P2-)	Always	1 MΩ or higher

NG → **Go to step 5**

RS

OK

4	CHECK CENTER AIRBAG SENSOR ASSEMBLY

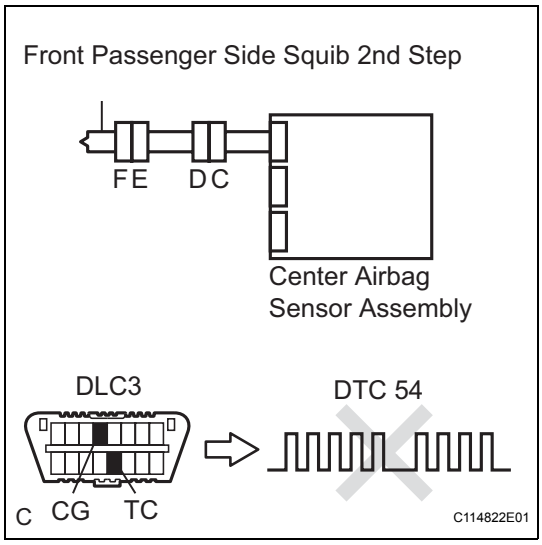

(a) Connect the connectors to the front passenger airbag assembly and the center airbag sensor assembly.
(b) Connect the negative (-) terminal cable to the battery, and wait for at least 2 seconds.
(c) Turn the ignition switch on (IG), and wait for at least 60 seconds.
(d) Clear the DTCs stored in memory (See page RS-34).
(e) Turn the ignition switch off.
(f) Turn the ignition switch on (IG), and wait for at least 60 seconds.
(g) Check the DTCs (See page RS-34).

OK:

DTC B1815, B1816, B1817, B1818 or 54 is not output.

HINT:

Codes other than DTC B1815, B1816, B1817, B1818 and 54 may be output at this time, but they are not related to this check.

NG → **REPLACE CENTER AIRBAG SENSOR ASSEMBLY**

OK

USE SIMULATION METHOD TO CHECK

5 CHECK INSTRUMENT PANEL WIRE

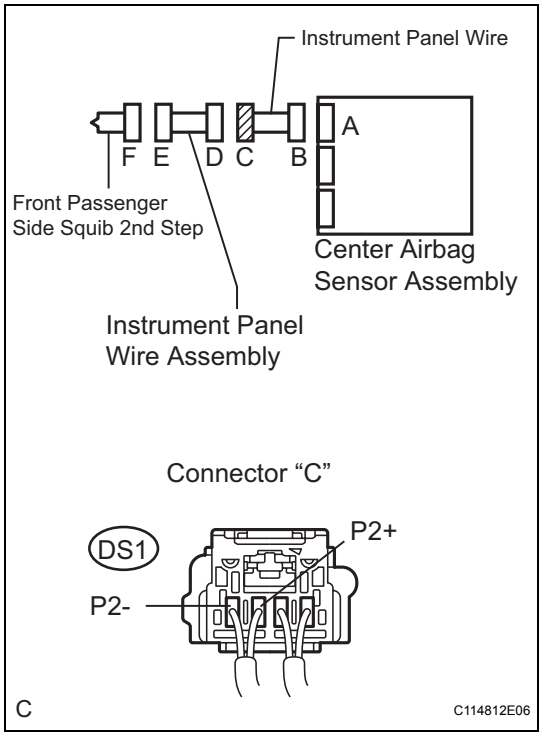

(a) Check for a short to B+ in the circuit.
  (1) Restore the released activation prevention mechanism of connector "B" to the original condition.
  (2) Disconnect the instrument panel wire connector from the instrument panel wire assembly.
  (3) Connect the negative (-) terminal cable to the battery, and wait for at least 2 seconds.
  (4) Turn the ignition switch on (IG).
  (5) Measure the voltage according to the value(s) in the table below.

Standard voltage

Tester connection	Condition	Specified condition
DS1-3 (P2+) - Body ground	Ignition switch on (IG)	Below 1 V
DS1-4 (P2-) - Body ground	Ignition switch on (IG)	Below 1 V

(b) Check for an open in the circuit.
  (1) Turn the ignition switch off.
  (2) Disconnect the negative (-) terminal cable from the battery, and wait for at least 90 seconds.
  (3) Measure the resistance according to the value(s) in the table below.

Standard resistance

Tester connection	Condition	Specified condition
DS1-3 (P2+) - DS1-4 (P2-)	Always	Below 1 Ω

(c) Check for a short to ground in the circuit.
  (1) Measure the resistance according to the value(s) in the table below.

Standard resistance

Tester connection	Condition	Specified condition
DS1-3 (P2+) - Body ground	Always	1 MΩ or higher
DS1-4 (P2-) - Body ground	Always	1 MΩ or higher

(d) Check for a short in the circuit.
  (1) Release the activation prevention mechanism built into connector "B" (See page RS-28).
  (2) Measure the resistance according to the value(s) in the table below.

Standard resistance

Tester connection	Condition	Specified condition
DS1-3 (P2+) - DS1-4 (P2-)	Always	1 MΩ or higher

NG → **REPAIR OR REPLACE INSTRUMENT PANEL WIRE**

OK

6	CHECK INSTRUMENT PANEL WIRE ASSEMBLY

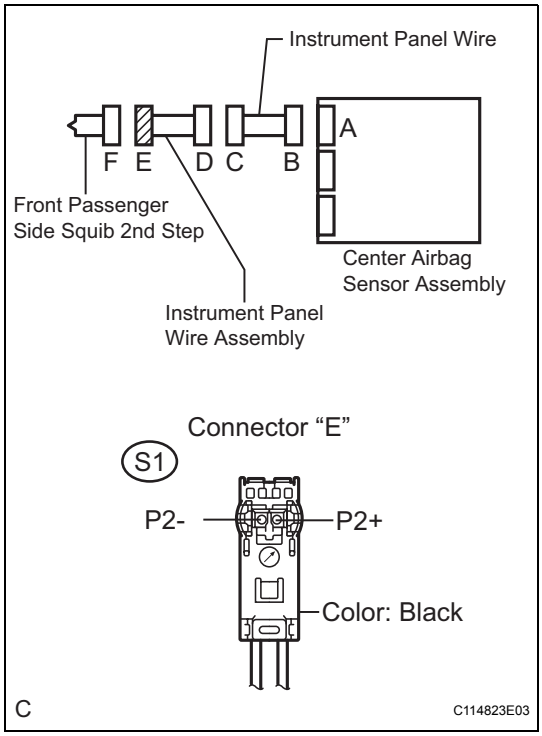

(a) Check for a short to B+ in the circuit.
  (1) Connect the negative (-) terminal cable to the battery, and wait for at least 2 seconds.
  (2) Turn the ignition switch on (IG).
  (3) Measure the voltage according to the value(s) in the table below.

Standard voltage

Tester connection	Condition	Specified condition
S1-2 (P2+) - Body ground	Ignition switch on (IG)	Below 1 V
S1-1 (P2-) - Body ground	Ignition switch on (IG)	Below 1 V

(b) Check for an open in the circuit.
  (1) Turn the ignition switch off.
  (2) Disconnect the negative (-) terminal cable from the battery, and wait for at least 90 seconds.
  (3) Measure the resistance according to the value(s) in the table below.

Standard resistance

Tester connection	Condition	Specified condition
S1-2 (P2+) - S1-1 (P2-)	Always	Below 1 Ω

(c) Check for a short to ground in the circuit.
  (1) Measure the resistance according to the value(s) in the table below.

Standard resistance

Tester connection	Condition	Specified condition
S1-2 (P2+) - Body ground	Always	1 MΩ or higher
S1-1 (P2-) - Body ground	Always	1 MΩ or higher

(d) Check for a short in the circuit.
  (1) Release the activation prevention mechanism built into connector "D" (See page RS-28).
  (2) Measure the resistance according to the value(s) in the table below.

Standard resistance

Tester connection	Condition	Specified condition
S1-2 (P2+) - S1-1 (P2-)	Always	1 MΩ or higher

NG → **REPAIR OR REPLACE INSTRUMENT PANEL WIRE ASSEMBLY**

OK

USE SIMULATION METHOD TO CHECK

DTC	B1820/55	Short in Driver Side - Side Squib Circuit

DTC	B1821/55	Open in Driver Side - Side Squib Circuit

DTC	B1822/55	Short to GND in Driver Side - Side Squib Circuit

DTC	B1823/55	Short to B+ in Driver Side - Side Squib Circuit

DESCRIPTION

The driver side - side squib circuit consists of the center airbag sensor assembly and the front seat side airbag assembly LH.

This circuit instructs the SRS to deploy when deployment conditions are met.

These DTCs are recorded when a malfunction is detected in the driver side - side squib circuit.

DTC No.	DTC Detection Condition	Trouble Area
B1820/55	• The center airbag sensor assembly receives a line short circuit signal 5 times in the driver side - side squib circuit during primary check. • Driver side - side squib malfunction • Center airbag sensor assembly malfunction	• Floor wire • Front seat side airbag assembly LH (Driver side - side squib) • Center airbag sensor assembly
B1821/55	• The center airbag sensor assembly receives an open circuit signal in the driver side - side squib circuit for 2 seconds. • Driver side - side squib malfunction • Center airbag sensor assembly malfunction	• Floor wire • Front seat side airbag assembly LH (Driver side - side squib) • Center airbag sensor assembly
B1822/55	• The center airbag sensor assembly receives a short circuit to ground signal in the driver side - side squib circuit for 0.5 seconds. • Driver side - side squib malfunction • Center airbag sensor assembly malfunction	• Floor wire • Front seat side airbag assembly LH (Driver side - side squib) • Center airbag sensor assembly
B1823/55	• The center airbag sensor assembly receives a short circuit to B+ signal in the driver side - side squib circuit for 0.5 seconds. • Driver side - side squib malfunction • Center airbag sensor assembly malfunction	• Floor wire • Front seat side airbag assembly LH (Driver side - side squib) • Center airbag sensor assembly

WIRING DIAGRAM

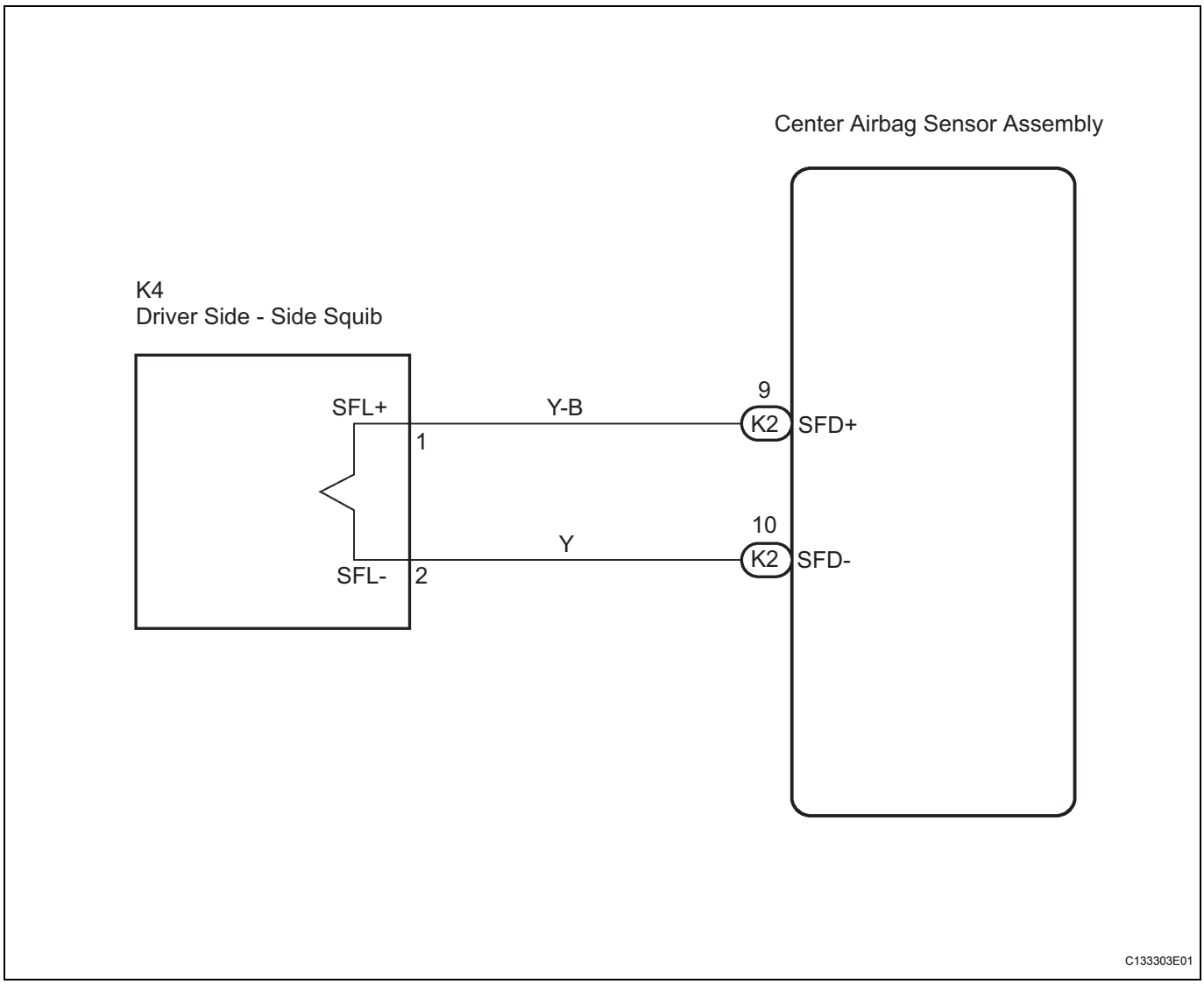

INSPECTION PROCEDURE

HINT:

- Perform the simulation method by selecting the "check mode" (signal check) with the intelligent tester (See page RS-37).
- After selecting the "check mode" (signal check), perform the simulation method by wiggling each connector of the airbag system or driving the vehicle on a city or rough road (See page RS-37).

1	CHECK FRONT SEAT SIDE AIRBAG ASSEMBLY LH (DRIVER SIDE - SIDE SQUIB)

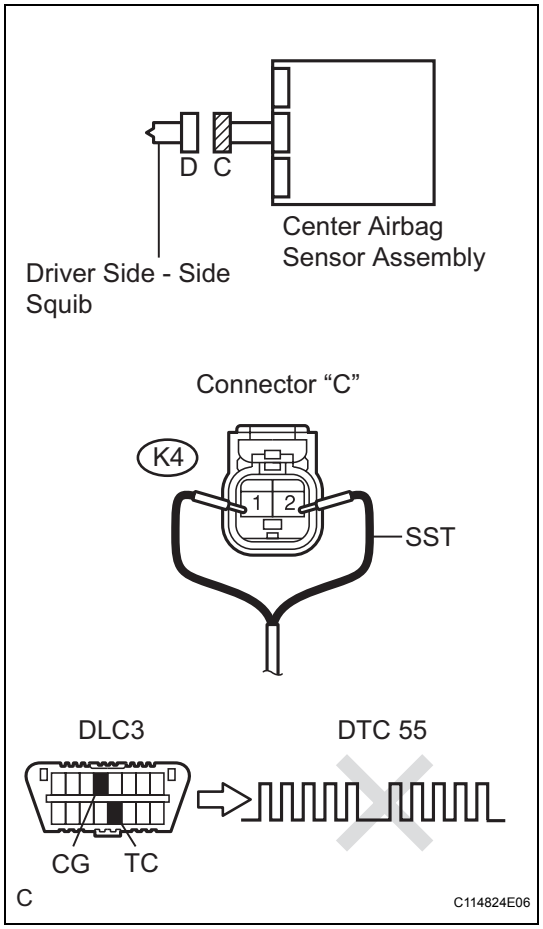

(a) Turn the ignition switch off.
(b) Disconnect the negative (-) terminal cable from the battery, and wait for at least 90 seconds.
(c) Disconnect the connector from the front seat side airbag assembly LH.
(d) Connect the black wire side of SST (resistance 2.1 Ω) to connector "C".
CAUTION:
Never connect a tester to the front seat side airbag assembly LH (driver side - side squib) for measurement, as this may lead to a serious injury due to airbag deployment.
NOTICE:
- **Do not forcibly insert the SST into the terminals of the connector when connecting.**
- **Insert straight the SST into the terminals of the connector.**

SST 09843-18060

(e) Connect the negative (-) terminal cable to the battery, and wait for at least 2 seconds.
(f) Turn the ignition switch on (IG), and wait for at least 60 seconds.
(g) Clear the DTCs stored in memory (See page RS-34).
(h) Turn the ignition switch off.
(i) Turn the ignition switch on (IG), and wait for at least 60 seconds.
(j) Check the DTCs (See page RS-34).
OK:
DTC B1820, B1821, B1822, B1823 or 55 is not output.
HINT:
Codes other than DTC B1820, B1821, B1822, B1823 and 55 may be output at this time, but they are not related to this check.

NG → **REPLACE FRONT SEAT ASSEMBLY LH**

OK

2	CHECK FLOOR WIRE (DRIVER SIDE - SIDE SQUIB CIRCUIT)

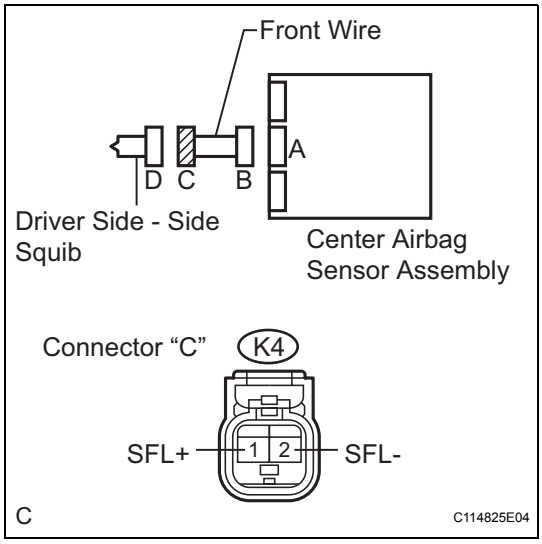

(a) Turn the ignition switch off.
(b) Disconnect the negative (-) terminal cable from the battery, and wait for at least 90 seconds.
(c) Disconnect the SST from connector "C".
(d) Disconnect the connectors from the center airbag sensor assembly.
(e) Check for a short to B+ in the circuit.
  (1) Connect the negative (-) terminal cable to the battery, and wait for at least 2 seconds.
  (2) Turn the ignition switch on (IG).
  (3) Measure the voltage according to the value(s) in the table below.

Standard voltage

Tester connection	Condition	Specified condition
K4-1 (SFL+) - Body ground	Ignition switch on (IG)	Below 1 V
K4-2 (SFL-) - Body ground	Ignition switch on (IG)	Below 1 V

(f) Check for an open in the circuit.
  (1) Turn the ignition switch off.
  (2) Disconnect the negative (-) terminal cable from the battery, and wait for at least 90 seconds.
  (3) Measure the resistance according to the value(s) in the table below.

Standard resistance

Tester connection	Condition	Specified condition
K4-1 (SFL+) - K4-2 (SFL-)	Always	Below 1 Ω

(g) Check for a short to ground in the circuit.
  (1) Measure the resistance according to the value(s) in the table below.

Standard resistance

Tester connection	Condition	Specified condition
K4-1 (SFL+) - Body ground	Always	1 MΩ or higher
K4-2 (SFL-) - Body ground	Always	1 MΩ or higher

(h) Check for a short in the circuit.
  (1) Release the activation prevention mechanism built into connector "B" (See page RS-28).
  (2) Measure the resistance according to the value(s) in the table below.

Standard resistance

Tester connection	Condition	Specified condition
K4-1 (SFL+) - K4-2 (SFL-)	Always	1 MΩ or higher

NG → **REPAIR OR REPLACE FLOOR WIRE**

OK

3	CHECK CENTER AIRBAG SENSOR ASSEMBLY

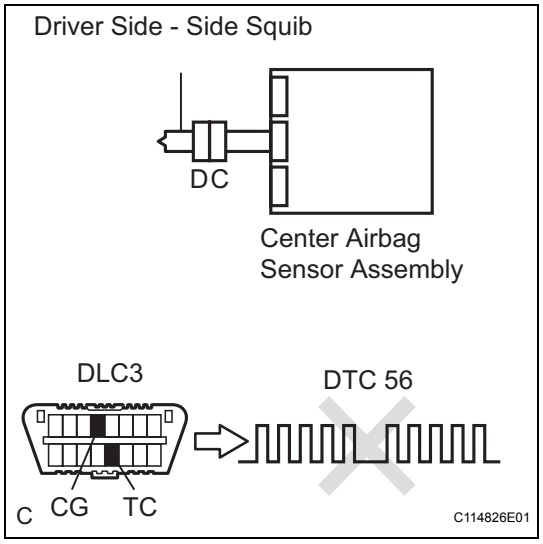

(a) Connect the connectors to the front seat side airbag assembly LH and the center airbag sensor assembly.
(b) Connect the negative (-) terminal cable to the battery, and wait for at least 2 seconds.
(c) Turn the ignition switch on (IG), and wait for at least 60 seconds.
(d) Clear the DTCs stored in memory (See page RS-34).
(e) Turn the ignition switch off.
(f) Turn the ignition switch on (IG), and wait for at least 60 seconds.
(g) Check the DTCs (See page RS-34).

OK:

DTC B1820, B1821, B1822, B1823 or 55 is not output.

HINT:

Codes other than DTC B1820, B1821, B1822, B1823 and 55 may be output at this time, but they are not related to this check.

NG → **REPLACE CENTER AIRBAG SENSOR ASSEMBLY**

OK →

USE SIMULATION METHOD TO CHECK

DTC	B1825/56	Short in Front Passenger Side - Side Squib Circuit

DTC	B1826/56	Open in Front Passenger Side - Side Squib Circuit

DTC	B1827/56	Short to GND in Front Passenger Side - Side Squib Circuit

DTC	B1828/56	Short to B+ in Front Passenger Side - Side Squib Circuit

DESCRIPTION

The front passenger side - side squib circuit consists of the center airbag sensor assembly and the front seat side airbag assembly RH.
The circuit instructs the SRS to deploy when deployment conditions are met.
These DTCs are recorded when a malfunction is detected in the front passenger side - side squib circuit.

DTC No.	DTC Detection Condition	Trouble Area
B1825/56	• The center airbag sensor assembly receives a line short circuit signal 5 times in the front passenger side - side squib circuit during primary check. • Front passenger side - side squib malfunction • Center airbag sensor assembly malfunction	• Floor wire No. 2 • Front seat side airbag assembly RH (Front passenger side - side squib) • Center airbag sensor assembly
B1826/56	• The center airbag sensor assembly receives an open circuit signal in the front passenger side - side squib circuit for 2 seconds. • Front passenger side - side squib malfunction • Center airbag sensor assembly malfunction	• Floor wire No. 2 • Front seat side airbag assembly RH (Front passenger side - side squib) • Center airbag sensor assembly
B1827/56	• The center airbag sensor assembly receives a short circuit to ground signal in the front passenger side - side squib circuit for 0.5 seconds. • Front passenger side - side squib malfunction • Center airbag sensor assembly malfunction	• Floor wire No. 2 • Front seat side airbag assembly RH (Front passenger side - side squib) • Center airbag sensor assembly
B1828/56	• The center airbag sensor assembly receives a short circuit to B+ signal in the front passenger side - side squib circuit for 0.5 seconds. • Front passenger side - side squib malfunction • Center airbag sensor assembly malfunction	• Floor wire No. 2 • Front seat side airbag assembly RH (Front passenger side - side squib) • Center airbag sensor assembly

WIRING DIAGRAM

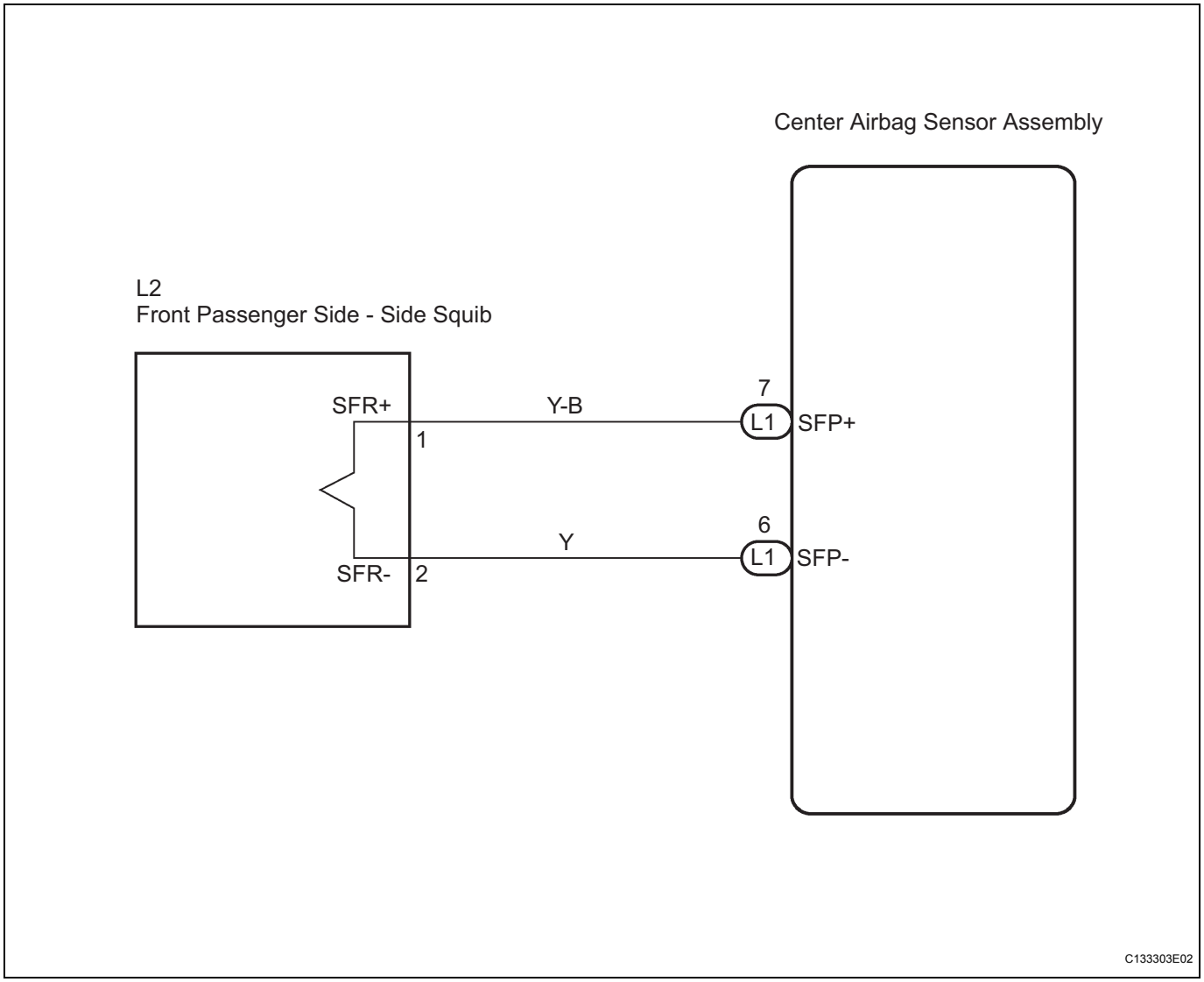

INSPECTION PROCEDURE

HINT:

- Perform the simulation method by selecting the "check mode" (signal check) with the intelligent tester (See page RS-37).
- After selecting the "check mode" (signal check), perform the simulation method by wiggling each connector of the airbag system or driving the vehicle on a city or rough road (See page RS-37).

1	CHECK FRONT SEAT SIDE AIRBAG ASSEMBLY RH (FRONT PASSENGER SIDE - SIDE SQUIB)

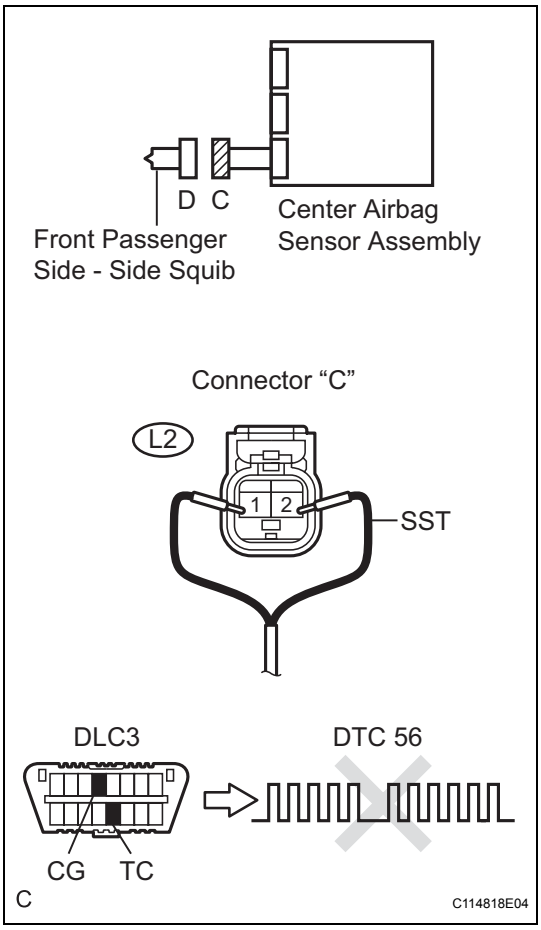

(a) Turn the ignition switch off.
(b) Disconnect the negative (-) terminal cable from the battery, and wait for at least 90 seconds.
(c) Disconnect the connector from the front seat side airbag assembly RH.
(d) Connect the black wire side of SST (resistance 2.1 Ω) to connector "C".
CAUTION:
Never connect a tester to the front seat side airbag assembly RH (front passenger side - side squib) for measurement, as this may lead to a serious injury due to airbag deployment.
NOTICE:
- **Do not forcibly insert the SST into the terminals of the connector when connecting.**
- **Insert straight the SST into the terminals of the connector.**

SST 09843-18060

(e) Connect the negative (-) terminal cable to the battery, and wait for at least 2 seconds.
(f) Turn the ignition switch on (IG), and wait for at least 60 seconds.
(g) Clear the DTCs stored in memory (See page RS-34).
(h) Turn the ignition switch off.
(i) Turn the ignition switch on (IG), and wait for at least 60 seconds.
(j) Check the DTCs (See page RS-34).
OK:
DTC B1825, B1826, B1827, B1828 or 56 is not output.
HINT:
Codes other than DTC B1825, B1826, B1827, B1828 and 56 may be output at this time, but they are not related to this check.

NG	REPLACE FRONT SEAT ASSEMBLY RH

OK

2	CHECK FLOOR WIRE NO. 2 (FRONT PASSENGER SIDE - SIDE SQUIB CIRCUIT)

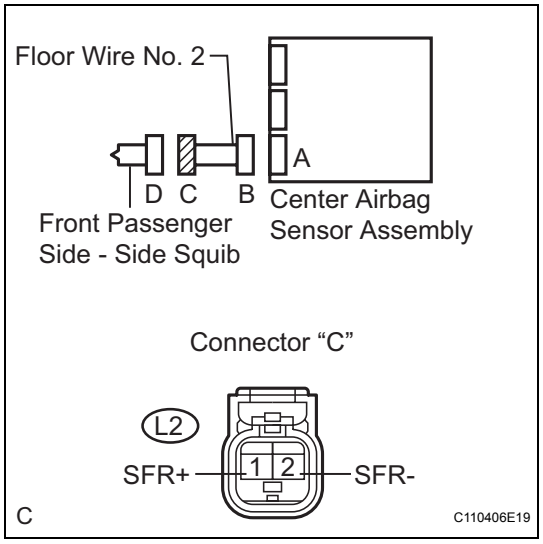

(a) Turn the ignition switch off.
(b) Disconnect the negative (-) terminal cable from the battery, and wait for at least 90 seconds.
(c) Disconnect the SST from connector "C".
(d) Disconnect the connectors from the center airbag sensor assembly.
(e) Check for a short to B+ in the circuit.
  (1) Connect the negative (-) terminal cable to the battery, and wait for at least 2 seconds.
  (2) Turn the ignition switch on (IG).
  (3) Measure the voltage according to the value(s) in the table below.

Standard voltage

Tester connection	Condition	Specified condition
L2-1 (SFR+) - Body ground	Ignition switch on (IG)	Below 1 V
L2-2 (SFR-) - Body ground	Ignition switch on (IG)	Below 1 V

(f) Check for an open in the circuit.
  (1) Turn the ignition switch off.
  (2) Disconnect the negative (-) terminal cable from the battery, and wait for at least 90 seconds.
  (3) Measure the resistance according to the value(s) in the table below.

Standard resistance

Tester connection	Condition	Specified condition
L2-1 (SFR+) - L2-2 (SFR-)	Always	Below 1 Ω

(g) Check for a short to ground in the circuit.
  (1) Measure the resistance according to the value(s) in the table below.

Standard resistance

Tester connection	Condition	Specified condition
L2-1 (SFR+) - Body ground	Always	1 MΩ or higher
L2-2 (SFR-) - Body ground	Always	1 MΩ or higher

(h) Check for a short in the circuit.
  (1) Release the activation prevention mechanism built into connector "B" (See page RS-28).
  (2) Measure the resistance according to the value(s) in the table below.

Standard resistance

Tester connection	Condition	Specified condition
L2-1 (SFR+) - L2-2 (SFR-)	Always	1 MΩ or higher

NG → **REPAIR OR REPLACE FLOOR WIRE NO. 2**

OK

3	CHECK CENTER AIRBAG SENSOR ASSEMBLY

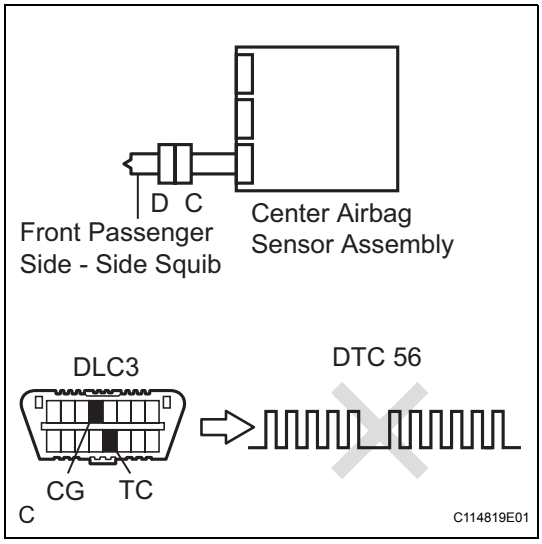

(a) Connect the connectors to the front seat airbag assembly RH and the center airbag sensor assembly.
(b) Connect the negative (-) terminal cable to the battery, and wait for at least 2 seconds.
(c) Turn the ignition switch on (IG), and wait for at least 60 seconds.
(d) Clear the DTCs stored in memory (See page RS-34).
(e) Turn the ignition switch off.
(f) Turn the ignition switch on (IG), and wait for at least 60 seconds.
(g) Check the DTCs (See page RS-34).

OK:

DTC B1825, B1826, B1827, B1828 or 56 is not output.

HINT:

Codes other than DTC B1825, B1826, B1827, B1828 and 56 may be output at this time, but they are not related to this check.

NG → **REPLACE CENTER AIRBAG SENSOR ASSEMBLY**

OK →

USE SIMULATION METHOD TO CHECK

DTC	B1830/57	Short in Driver Side Curtain Shield Squib Circuit

DTC	B1831/57	Open in Driver Side Curtain Shield Squib Circuit

DTC	B1832/57	Short to GND in Driver Side Curtain Shield Squib Circuit

DTC	B1833/57	Short to B+ in Driver Side Curtain Shield Squib Circuit

DESCRIPTION

The driver side curtain shield squib circuit consists of the center airbag sensor assembly and the curtain shield airbag assembly LH.
The circuit instructs the SRS to deploy when deployment conditions are met.
These DTCs are recorded when a malfunction is detected in the driver side curtain shield squib circuit.

DTC No.	DTC Detection Condition	Trouble Area
B1830/57	• The center airbag sensor assembly receives a line short circuit signal 5 times in the driver side curtain shield squib circuit during primary check. • Driver side curtain shield squib malfunction • Center airbag sensor assembly malfunction	• Floor wire • Curtain shield airbag assembly LH (Driver side curtain shield squib) • Center airbag sensor assembly
B1831/57	• The center airbag sensor assembly receives an open circuit signal in the driver side curtain shield squib circuit for 2 seconds. • Driver side curtain shield squib malfunction • Center airbag sensor assembly malfunction	• Floor wire • Curtain shield airbag assembly LH (Driver side curtain shield squib) • Center airbag sensor assembly
B1832/57	• The center airbag sensor assembly receives a short circuit to ground signal in the driver side curtain shield squib circuit for 0.5 seconds. • Driver side curtain shield squib malfunction • Center airbag sensor assembly malfunction	• Floor wire • Curtain shield airbag assembly LH (Driver side curtain shield squib) • Center airbag sensor assembly
B1833/57	• The center airbag sensor assembly receives a short circuit to B+ signal in the driver side curtain shield squib circuit for 0.5 seconds. • Driver side curtain shield squib malfunction • Center airbag sensor assembly malfunction	• Floor wire • Curtain shield airbag assembly LH (Driver side curtain shield squib) • Center airbag sensor assembly

WIRING DIAGRAM

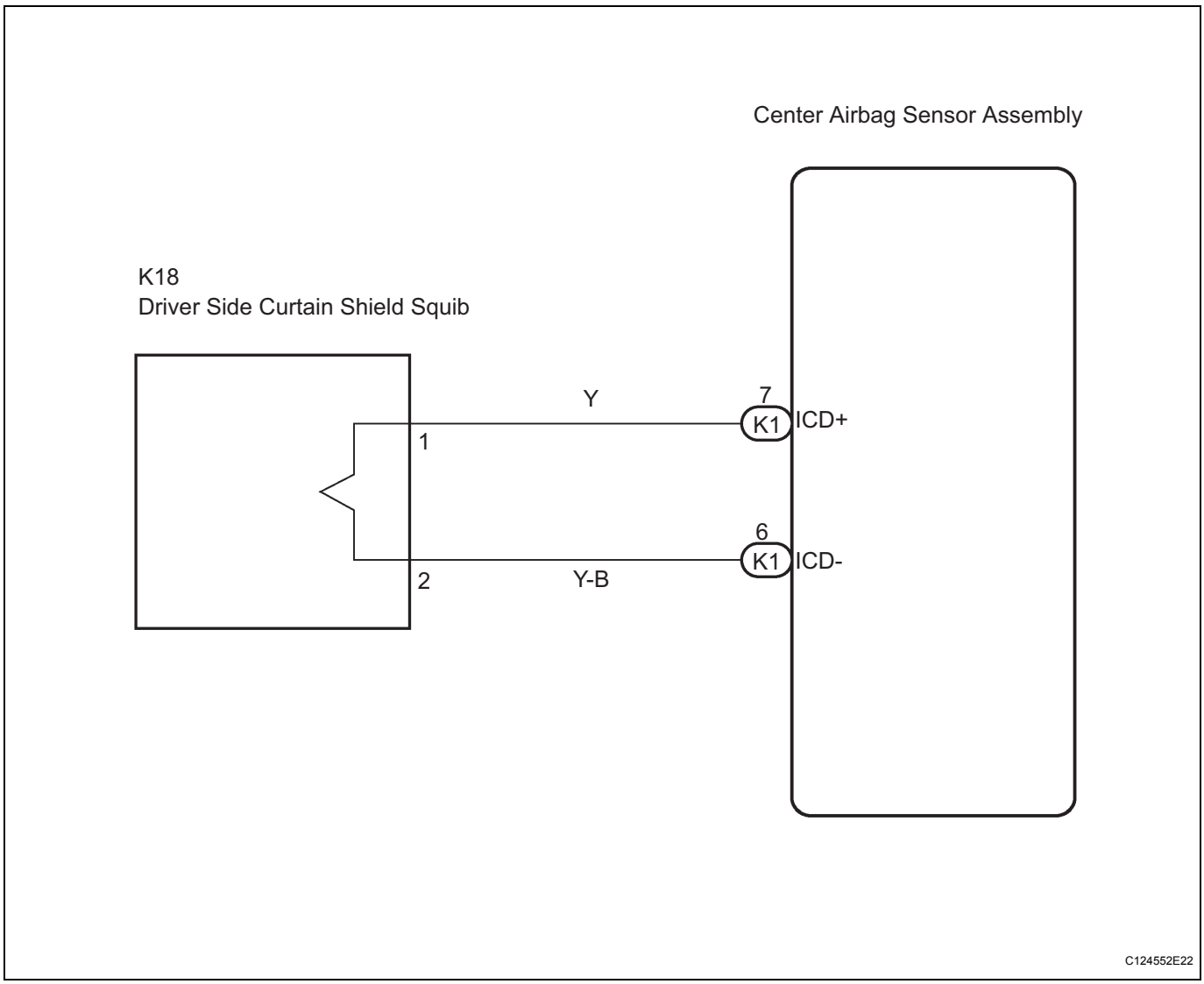

INSPECTION PROCEDURE

HINT:

- Perform the simulation method by selecting the "check mode" (signal check) with the intelligent tester (See page RS-37).
- After selecting the "check mode" (signal check), perform the simulation method by wiggling each connector of the airbag system or driving the vehicle on a city or rough road (See page RS-37).

1	CHECK CURTAIN SHIELD AIRBAG ASSEMBLY LH (DRIVER SIDE CURTAIN SHIELD SQUIB)

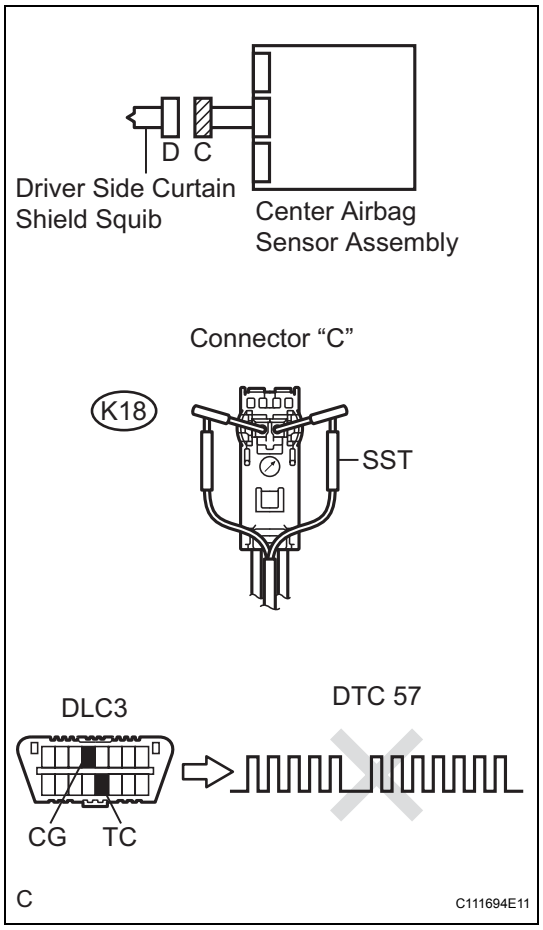

(a) Turn the ignition switch off.
(b) Disconnect the negative (-) terminal cable from the battery, and wait for at least 90 seconds.
(c) Disconnect the connector from the curtain shield airbag assembly LH.
(d) Connect the white wire side of SST (resistance 2.1 Ω) to connector "C".
CAUTION:
Never connect a tester to the curtain shield airbag assembly LH (driver side curtain shield squib) for measurement, as this may lead to a serious injury due to airbag deployment.
NOTICE:
- **Do not forcibly insert the SST into the terminals of the connector when connecting.**
- **Insert straight the SST into the terminals of the connector.**

SST 09843-18060

(e) Connect the negative (-) terminal cable to the battery, and wait for at least 2 seconds.
(f) Turn the ignition switch on (IG), and wait for at least 60 seconds.
(g) Clear the DTCs stored in memory (See page RS-34).
(h) Turn the ignition switch off.
(i) Turn the ignition switch on (IG), and wait for at least 60 seconds.
(j) Check the DTCs (See page RS-34).
OK:
DTC B1830, B1831, B1832, B1833 or 57 is not output.
HINT:
Codes other than DTC B1830, B1831, B1832, B1833 and 57 may be output at this time, but they are not related to this check.

NG → **REPLACE CURTAIN SHIELD AIRBAG ASSEMBLY LH**

OK

2	CHECK CONNECTOR

(a) Turn the ignition switch off.
(b) Disconnect the negative (-) terminal cable from the battery, and wait for at least 90 seconds.
(c) Disconnect the SST from connector "C".
(d) Check that the floor wire connector (on the curtain shield assembly LH side) is not damaged.

RS

OK:
The lock button is not disengaged, or the claw of the lock is not deformed or damaged.

NG → **REPAIR OR REPLACE FLOOR WIRE**

OK

3 CHECK FLOOR WIRE (DRIVER SIDE CURTAIN SHIELD SQUIB CIRCUIT)

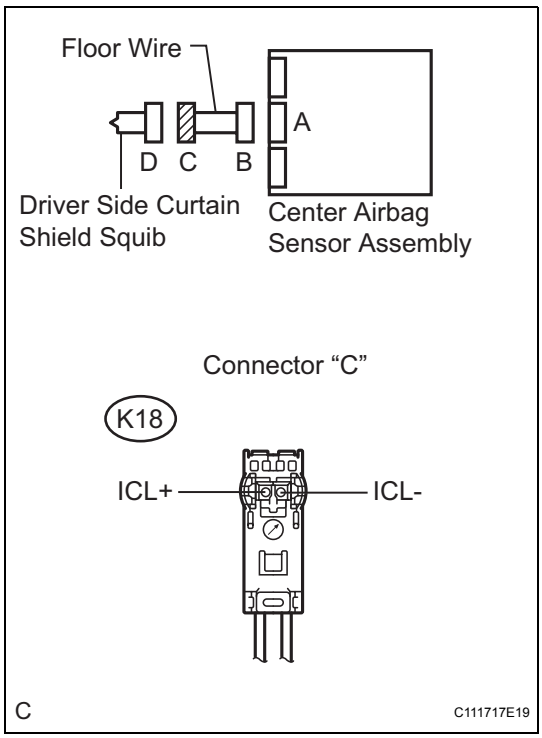

(a) Disconnect the connectors from the center airbag sensor assembly.
(b) Check for a short to B+ in the circuit.
  (1) Connect the negative (-) terminal cable to the battery, and wait for at least 2 seconds.
  (2) Turn the ignition switch on (IG).
  (3) Measure the voltage according to the value(s) in the table below.
  Standard voltage

Tester connection	Condition	Specified condition
K18-1 (ICL+) - Body ground	Ignition switch on (IG)	Below 1 V
K18-2 (ICL-) - Body ground	Ignition switch on (IG)	Below 1 V

(c) Check for an open in the circuit.
  (1) Turn the ignition switch off.
  (2) Disconnect the negative (-) terminal cable from the battery, and wait for at least 90 seconds.
  (3) Measure the resistance according to the value(s) in the table below.
  Standard resistance

Tester connection	Condition	Specified condition
K18-1 (ICL+) - K18-2 (ICL-)	Always	Below 1 Ω

(d) Check for a short to ground in the circuit.
  (1) Measure the resistance according to the value(s) in the table below.
  Standard resistance

Tester connection	Condition	Specified condition
K18-1 (ICL+) - Body ground	Always	1 MΩ or higher
K18-2 (ICL-) - Body ground	Always	1 MΩ or higher

(e) Check for a short in the circuit.
  (1) Release the activation prevention mechanism built into connector "B" (See page RS-28).
  (2) Measure the resistance according to the value(s) in the table below.
  Standard resistance

Tester connection	Condition	Specified condition
K18-1 (ICL+) - K18-2 (ICL-)	Always	1 MΩ or higher

NG → **REPAIR OR REPLACE FLOOR WIRE**

OK

4	CHECK CENTER AIRBAG SENSOR ASSEMBLY

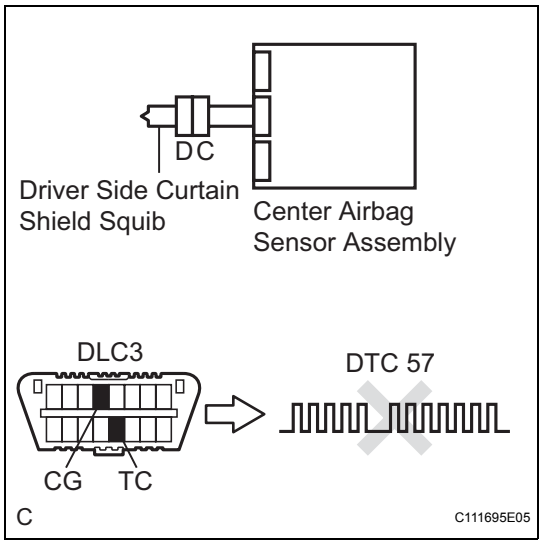

(a) Connect the connectors to the curtain shield airbag assembly LH and the center airbag sensor assembly.
(b) Connect the negative (-) terminal cable to the battery, and wait for at least 2 seconds.
(c) Turn the ignition switch on (IG), and wait for at least 60 seconds.
(d) Clear the DTCs stored in memory (See page RS-34).
(e) Turn the ignition switch off.
(f) Turn the ignition switch on (IG), and wait for at least 60 seconds.
(g) Check the DTCs (See page RS-34).

OK:

DTC B1830, B1831, B1832, B1833 or 57 is not output.

HINT:

Codes other than DTC B1830, B1831, B1832, B1833 and 57 may be output at this time, but they are not related to this check.

NG → **REPLACE CENTER AIRBAG SENSOR ASSEMBLY**

OK

USE SIMULATION METHOD TO CHECK

DTC	B1835/58	Short in Front Passenger Side Curtain Shield Squib Circuit

DTC	B1836/58	Open in Front Passenger Side Curtain Shield Squib Circuit

DTC	B1837/58	Short to GND in Front Passenger Side Curtain Shield Squib Circuit

DTC	B1838/58	Short to B+ in Front Passenger Side Curtain Shield Squib Circuit

DESCRIPTION

The front passenger side curtain shield squib circuit consists of the center airbag sensor assembly and the curtain shield airbag assembly RH.
The circuit instructs the SRS to deploy when deployment conditions are met.
These DTCs are recorded when a malfunction is detected in the front passenger side curtain shield squib circuit.

DTC No.	DTC Detection Condition	Trouble Area
B1835/58	• The center airbag sensor assembly receives a line short circuit signal 5 times in the front passenger side curtain shield squib circuit during primary check. • Front passenger side curtain shield squib malfunction • Center airbag sensor assembly malfunction	• Floor wire No. 2 • Curtain shield airbag assembly RH (Front passenger side curtain shield squib) • Center airbag sensor assembly
B1836/58	• The center airbag sensor assembly receives an open circuit signal in the front passenger side curtain shield squib circuit for 2 seconds. • Front passenger side curtain shield squib malfunction • Center airbag sensor assembly malfunction	• Floor wire No. 2 • Curtain shield airbag assembly RH (Front passenger side curtain shield squib) • Center airbag sensor assembly
B1837/58	• The center airbag sensor assembly receives a short circuit to ground signal in the front passenger side curtain shield squib circuit for 0.5 seconds. • Front passenger side curtain shield squib malfunction • Center airbag sensor assembly malfunction	• Floor wire No. 2 • Curtain shield airbag assembly RH (Front passenger side curtain shield squib) • Center airbag sensor assembly
B1838/58	• The center airbag sensor assembly receives a short circuit to B+ signal in the front passenger side curtain shield squib circuit for 0.5 seconds. • Front passenger side curtain shield squib malfunction • Center airbag sensor assembly malfunction	• Floor wire No. 2 • Curtain shield airbag assembly RH (Front passenger side curtain shield squib) • Center airbag sensor assembly

WIRING DIAGRAM

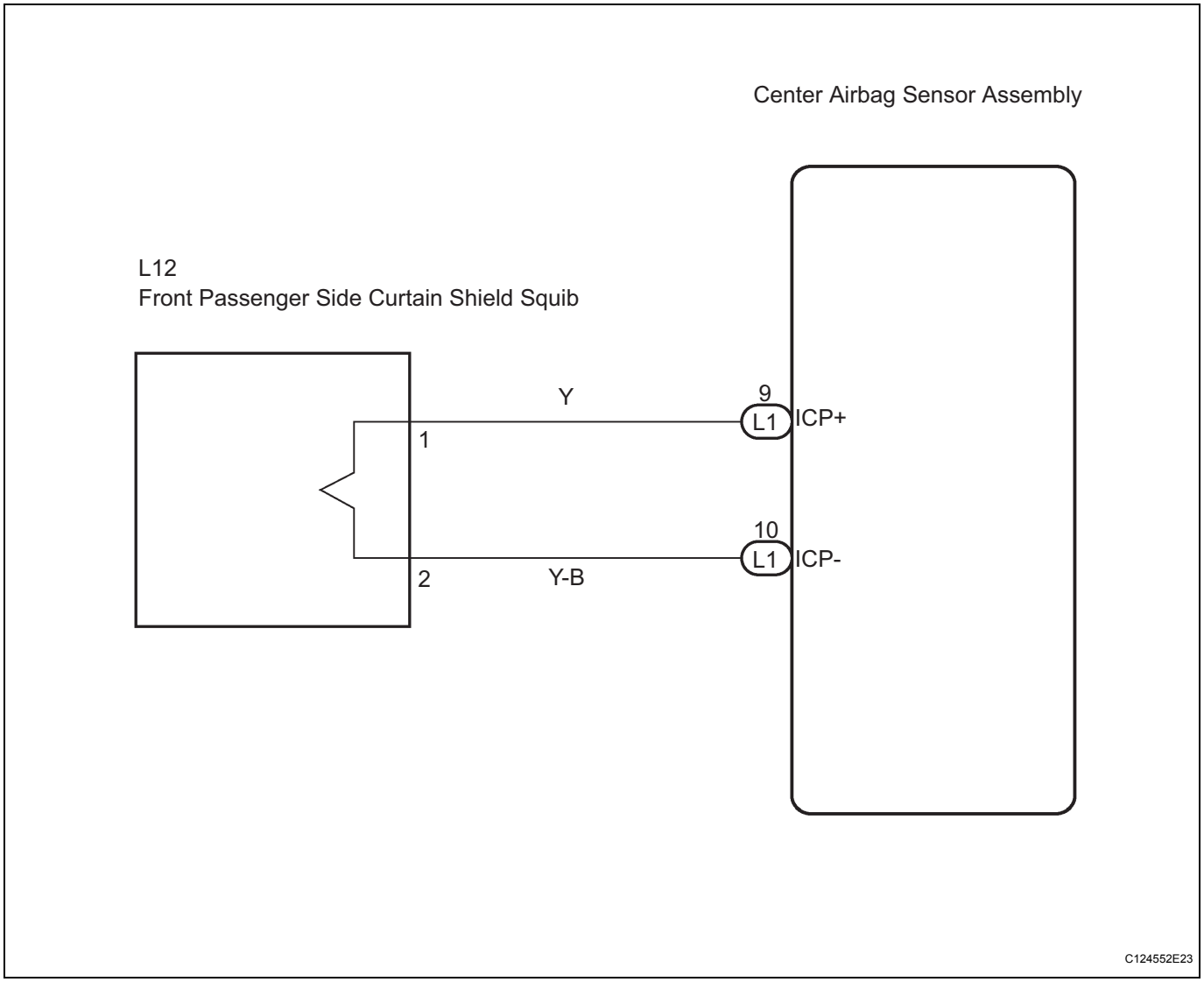

INSPECTION PROCEDURE

HINT:

- Perform the simulation method by selecting the "check mode" (signal check) with the intelligent tester (See page RS-37).
- After selecting the "check mode" (signal check), perform the simulation method by wiggling each connector of the airbag system or driving the vehicle on a city or rough road (See page RS-37).

1	CHECK CURTAIN SHIELD AIRBAG ASSEMBLY RH (FRONT PASSENGER SIDE CURTAIN SHIELD SQUIB)

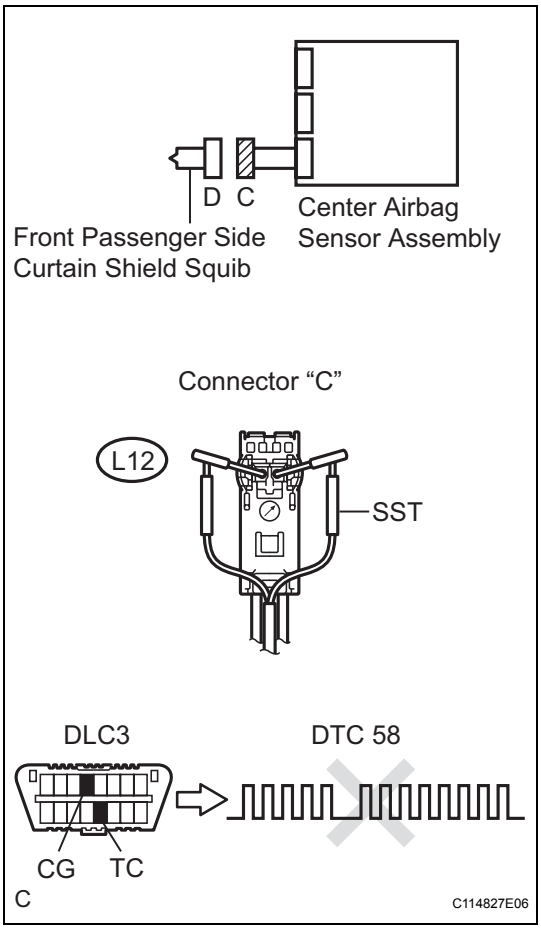

(a) Turn the ignition switch off.
(b) Disconnect the negative (-) terminal cable from the battery, and wait for at least 90 seconds.
(c) Disconnect the connectors from the curtain shield airbag assembly RH.
(d) Connect the white wire side of SST (resistance 2.1 Ω) to connector "C".
CAUTION:
Never connect a tester to the curtain shield airbag assembly RH (front passenger side curtain shield squib) for measurement, as this may lead to a serious injury due to airbag deployment.
NOTICE:
- **Do not forcibly insert the SST into the terminals of the connector when connecting.**
- **Insert straight the SST into the terminals of the connector.**

SST 09843-18060
(e) Connect the negative (-) terminal cable to the battery, and wait for at least 2 seconds.
(f) Turn the ignition switch on (IG), and wait for at least 60 seconds.
(g) Clear the DTCs stored in memory (See page RS-34).
(h) Turn the ignition switch off.
(i) Turn the ignition switch on (IG), and wait for at least 60 seconds.
(j) Check the DTCs (See page RS-34).
OK:
DTC B1835, B1836, B1837, B1838 or 58 is not output.
HINT:
Codes other than DTC B1835, B1836, B1837, B1838 and 58 may be output at this time, but they are not related to this check.

NG → **REPLACE CURTAIN SHIELD AIRBAG ASSEMBLY RH**

OK

2	CHECK CONNECTOR

(a) Turn the ignition switch off.
(b) Disconnect the negative (-) terminal cable from the battery, and wait for at least 90 seconds.
(c) Disconnect the SST from connector "C".
(d) Check that the floor wire No. 2 connectors (on the curtain shield airbag assembly RH side) are not damaged.

OK:
The lock button is not disengaged, or the claw of the lock is not deformed or damaged.

NG → **REPAIR OR REPLACE FLOOR WIRE NO. 2**

OK

3	CHECK FLOOR WIRE NO. 2 (FRONT PASSENGER SIDE CURTAIN SHIELD SQUIB CIRCUIT)

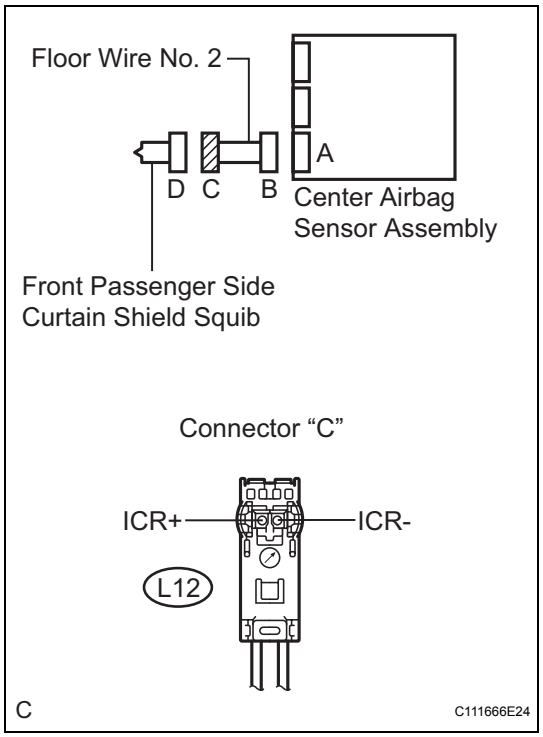

(a) Disconnect the connectors from the center airbag sensor assembly.
(b) Check for a short to B+ in the circuit.
  (1) Connect the negative (-) terminal cable to the battery, and wait for at least 2 seconds.
  (2) Turn the ignition switch on (IG).
  (3) Measure the voltage according to the value(s) in the table below.
  Standard voltage

Tester connection	Condition	Specified condition
L12-1 (ICR+) - Body ground	Ignition switch on (IG)	Below 1 V
L12-2 (ICR-) - Body ground	Ignition switch on (IG)	Below 1 V

(c) Check for an open in the circuit.
  (1) Turn the ignition switch off.
  (2) Disconnect the negative (-) terminal cable from the battery, and wait for at least 90 seconds.
  (3) Measure the resistance according to the value(s) in the table below.
  Standard resistance

Tester connection	Condition	Specified condition
L12-1 (ICR+) - L12-2 (ICR-)	Always	Below 1 Ω

(d) Check for a short to ground in the circuit.
  (1) Measure the resistance according to the value(s) in the table below.
  Standard resistance

Tester connection	Condition	Specified condition
L12-1 (ICR+) - Body ground	Always	1 MΩ or higher
L12-2 (ICR-) - Body ground	Always	1 MΩ or higher

(e) Check for a short in the circuit.
  (1) Release the activation prevention mechanism built into connector "B" (See page RS-28).
  (2) Measure the resistance according to the value(s) in the table below.
  Standard resistance

Tester connection	Condition	Specified condition
L12-1 (ICR+) - L12-2 (ICR-)	Always	1 MΩ or higher

NG → **REPAIR OR REPLACE FLOOR WIRE NO. 2**

RS

OK

4	CHECK CENTER AIRBAG SENSOR ASSEMBLY

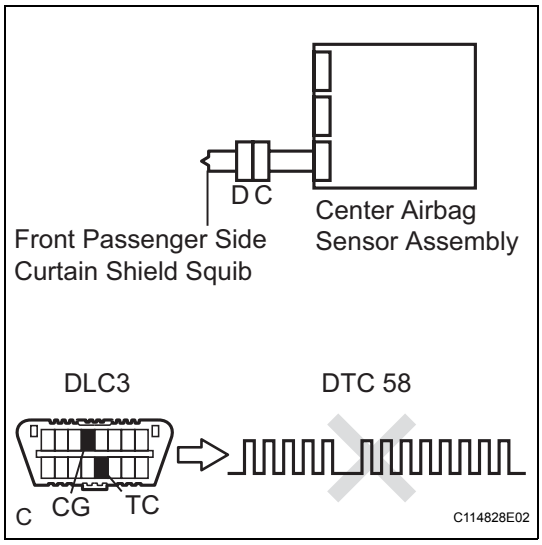

(a) Connect the connectors to the curtain shield airbag assembly RH and the center airbag sensor assembly.
(b) Connect the negative (-) terminal cable to the battery, and wait for at least 2 seconds.
(c) Turn the ignition switch on (IG), and wait for at least 60 seconds.
(d) Clear the DTCs stored in memory (See page RS-34).
(e) Turn the ignition switch off.
(f) Turn the ignition switch on (IG), and wait for at least 60 seconds.
(g) Check the DTCs (See page RS-34).

OK:

DTC B1835, B1836, B1837, B1838 or 58 is not output.

HINT:

Codes other than DTC B1835, B1836, B1837, B1838 and 58 may be output at this time, but they are not related to this check.

NG → **REPLACE CENTER AIRBAG SENSOR ASSEMBLY**

OK

USE SIMULATION METHOD TO CHECK

DTC	B1860/64	Short in Driver Side Knee Airbag Squib Circuit

DTC	B1861/64	Open in Driver Side Knee Airbag Squib Circuit

DTC	B1862/64	Short to GND in Driver Side Knee Airbag Squib Circuit

DTC	B1863/64	Short to B+ in Driver Side Knee Airbag Squib Circuit

DESCRIPTION

The driver side knee airbag squib circuit consists of the center airbag sensor assembly and the driver side knee airbag assembly.
This circuit instructs the SRS to deploy when deployment conditions are met.
These DTCs are recorded when a malfunction is detected in the driver side knee airbag squib circuit.

DTC No.	DTC Detecting Condition	Trouble Area
B1860/64	• The center airbag sensor assembly receives a line short circuit signal 5 times in the driver side knee airbag squib circuit during primary check. • Driver side knee airbag squib malfunction • Center airbag sensor assembly malfunction	• Instrument panel wire • Driver side knee airbag assembly (Driver side knee airbag squib) • Center airbag sensor assembly
B1861/64	• The center airbag sensor assembly receives an open circuit signal in the driver side knee airbag squib circuit for 2 seconds. • Driver side knee airbag squib malfunction • Center airbag sensor assembly malfunction	• Instrument panel wire • Driver side knee airbag assembly (Driver side knee airbag squib) • Center airbag sensor assembly
B1862/64	• The airbag sensor assembly center receives a short circuit to ground signal in the driver side knee airbag squib circuit for 0.5 seconds. • Driver side knee airbag squib malfunction • Center airbag sensor assembly malfunction	• Instrument panel wire • Driver side knee airbag assembly (Driver side knee airbag squib) • Center airbag sensor assembly
B1863/64	• The airbag sensor assembly center receives a short circuit to B+ signal in the driver side knee airbag squib circuit for 0.5 seconds. • Driver side knee airbag squib malfunction • Center airbag sensor assembly malfunction	• Instrument panel wire • Driver side knee airbag assembly (Driver side knee airbag squib) • Center airbag sensor assembly

WIRING DIAGRAM

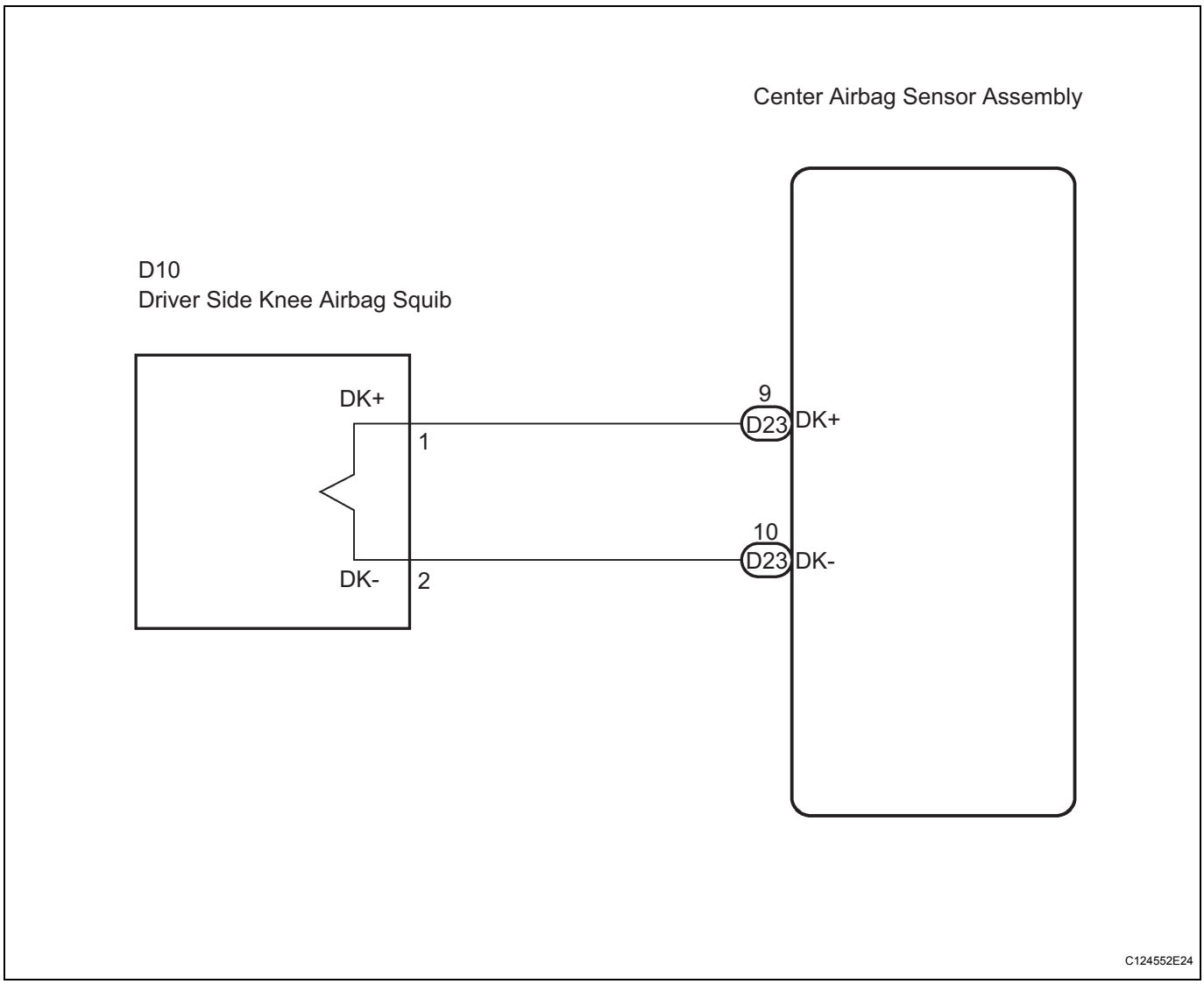

INSPECTION PROCEDURE

HINT:

- Perform the simulation method by selecting the "check mode" (signal check) with the intelligent tester (See page RS-37).
- After selecting the "check mode" (signal check), perform the simulation method by wiggling each connector of the airbag system or driving the vehicle on a city or rough road (See page RS-37).

1	CHECK DRIVER SIDE KNEE AIRBAG ASSEMBLY (DRIVER SIDE KNEE AIRBAG SQUIB)

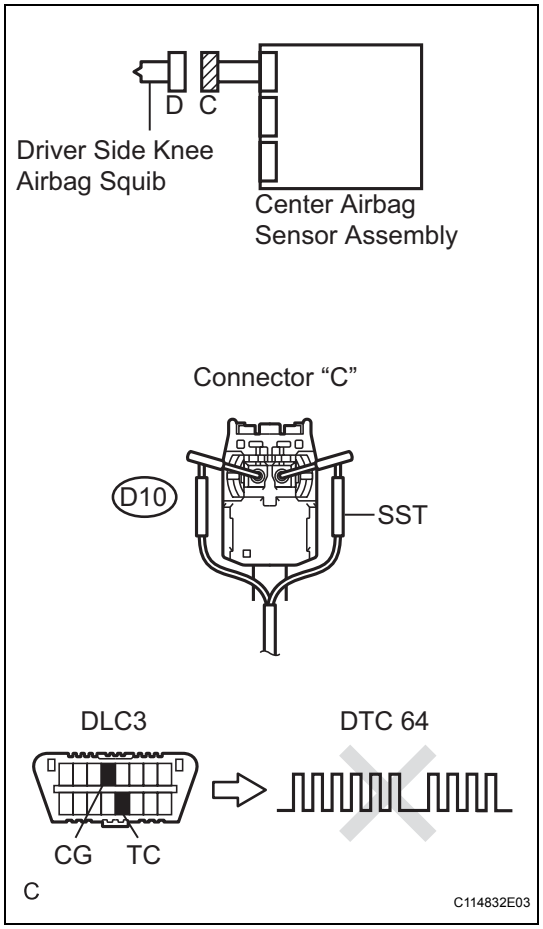

(a) Turn the ignition switch off.
(b) Disconnect the negative (-) terminal cable from the battery, and wait for at least 90 seconds.
(c) Disconnect the connector from the driver side knee airbag assembly.
(d) Connect the white wire side of SST (resistance 2.1 Ω) to the floor wire.

CAUTION:
Never connect a tester to the driver side knee airbag assembly (driver side knee airbag squib) for measurement, as this may lead to a serious injury due to airbag deployment.

NOTICE:
- **Do not forcibly insert the SST into the terminals of the connector when connecting.**
- **Insert straight the SST into the terminals of the connector.**

SST 09843-18060

(e) Connect the negative (-) terminal cable to the battery, and wait for at least 2 seconds.
(f) Turn the ignition switch on (IG), and wait for at least 60 seconds.
(g) Clear the DTCs stored in memory (See page RS-34).
(h) Turn the ignition switch off.
(i) Turn the ignition switch on (IG), and wait for at least 60 seconds.
(j) Check the DTCs (See page RS-34).

OK:
DTC B1860, B1861, B1862, B1863 or 64 is not output.

HINT:
Codes other than DTC B1860, B1861, B1862, B1863 and 64 may be output at this time, but they are not related to this check.

OK	REPLACE DRIVER SIDE KNEE AIRBAG ASSEMBLY

NG

2	CHECK CONNECTOR

(a) Turn the ignition switch off.
(b) Disconnect the negative (-) terminal cable from the battery, and wait for at least 90 seconds.
(c) Disconnect the SST from connector "C".
(d) Check that the instrument panel wire connector (on the driver side knee airbag assembly side) is not damaged.

OK:
The lock button is not disengaged, or the claw of the lock is not deformed or damaged.

NG → REPAIR OR REPLACE INSTRUMENT PANEL WIRE

OK

3 CHECK INSTRUMENT PANEL WIRE (DRIVER SIDE KNEE AIRBAG SQUIB CIRCUIT)

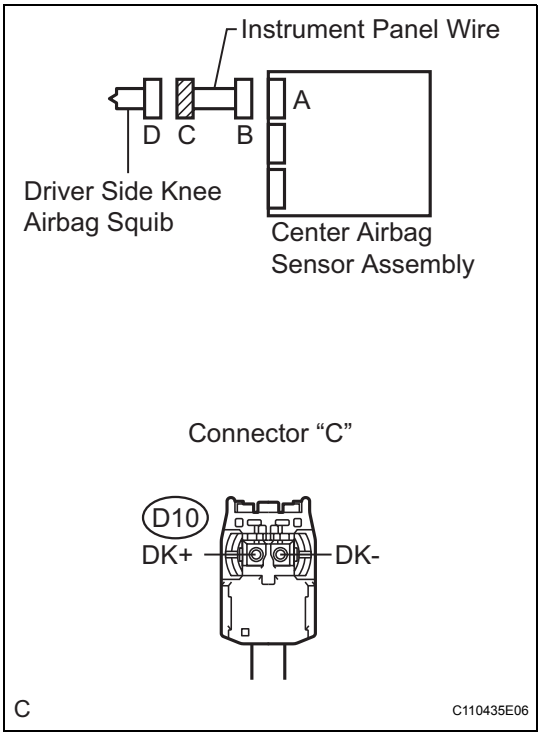

(a) Disconnect the connectors from the center airbag sensor assembly.

(b) Check for a short to B+ in the circuit.
  (1) Connect the negative (-) terminal cable to the battery, and wait for at least 2 seconds.
  (2) Turn the ignition switch on (IG).
  (3) Measure the voltage according to the value(s) in the table below.
  Standard voltage

Tester connection	Condition	Specified condition
D10-1 (DK+) - Body ground	Ignition switch on (IG)	Below 1 V
D10-2 (DK-) - Body ground	Ignition switch on (IG)	Below 1 V

(c) Check for an open in the circuit.
  (1) Turn the ignition switch off.
  (2) Disconnect the negative (-) terminal cable from the battery, and wait for at least 90 seconds.
  (3) Measure the resistance according to the value(s) in the table below.
  Standard resistance

Tester connection	Condition	Specified condition
D10-1 (DK+) - D10-2 (DK-)	Always	Below 1 Ω

(d) Check for a short to ground in the circuit.
  (1) Measure the resistance according to the value(s) in the table below.
  Standard resistance

Tester connection	Condition	Specified condition
D10-1 (DK+) - Body ground	Always	1 MΩ or higher
D10-2 (DK-) - Body ground	Always	1 MΩ or higher

(e) Check for a short in the circuit.
  (1) Release the activation prevention mechanism built into connector "B" (See page RS-28).
  (2) Measure the resistance according to the value(s) in the table below.
  Standard resistance

Tester connection	Condition	Specified condition
D10-1 (DK+) - D10-2 (DK-)	Always	1 MΩ or higher

NG → REPAIR OR REPLACE INSTRUMENT PANEL WIRE

RS

OK

4	CHECK CENTER AIRBAG SENSOR ASSEMBLY

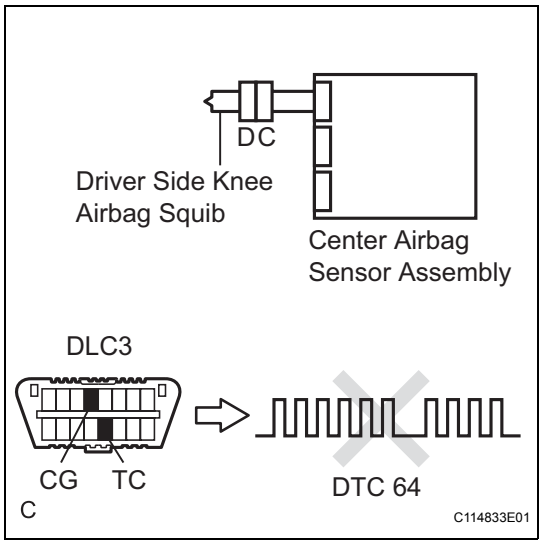

(a) Connect the connectors to the driver side knee airbag assembly and the center airbag sensor assembly.
(b) Connect the negative (-) terminal cable to the battery, and wait for at least 2 seconds.
(c) Turn the ignition switch on (IG), and wait for at least 60 seconds.
(d) Clear the DTCs stored in memory (See page RS-34).
(e) Turn the ignition switch off.
(f) Turn the ignition switch on (IG), and wait for at least 60 seconds.
(g) Check the DTCs (See page RS-34).

OK:

DTC B1860, B1861, B1862, B1863 or 64 is not output.

HINT:

Codes other than DTC B1860, B1861, B1862, B1863 and 64 may be output at this time, but they are not related to this check.

NG → **REPLACE CENTER AIRBAG SENSOR ASSEMBLY**

OK

USE SIMULATION METHOD TO CHECK

DTC	B1900/73	Short in Driver Side Front Pretensioner Squib Circuit

DTC	B1901/73	Open in Driver Side Front Pretensioner Squib Circuit

DTC	B1902/73	Short to GND in Driver Side Front Pretensioner Squib Circuit

DTC	B1903/73	Short to B+ in Driver Side Front Pretensioner Squib Circuit

DESCRIPTION

The driver side front pretensioner squib circuit consists of the center airbag sensor assembly and the front seat outer belt assembly LH.
This circuit instructs the SRS to deploy when deployment conditions are met.
These DTCs are recorded when a malfunction is detected in the front pretensioner squib circuit.

DTC No.	DTC Detection Condition	Trouble Area
B1900/73	• The center airbag sensor assembly receives a line short circuit signal 5 times in the driver side front pretensioner squib circuit during primary check. • Driver side front pretensioner squib malfunction • Center airbag sensor assembly malfunction	• Floor wire • Front seat outer belt assembly LH (Driver side front pretensioner squib) • Center airbag sensor assembly
B1901/73	• The center airbag sensor assembly receives an open circuit signal in the driver side front pretensioner squib circuit for 2 seconds. • Driver side front pretensioner squib malfunction • Center airbag sensor assembly malfunction	• Floor wire • Front seat outer belt assembly LH (Driver side front pretensioner squib) • Center airbag sensor assembly
B1902/73	• The center airbag sensor assembly receives a short circuit to ground signal in the driver side front pretensioner squib circuit for 0.5 seconds. • Driver side front pretensioner squib malfunction • Center airbag sensor assembly malfunction	• Floor wire • Front seat outer belt assembly LH (Driver side front pretensioner squib) • Center airbag sensor assembly
B1903/73	• The center airbag sensor assembly receives a short circuit to B+ signal in the driver side front pretensioner squib circuit for 0.5 seconds. • Driver side front pretensioner squib malfunction • Center airbag sensor assembly malfunction	• Floor wire • Front seat outer belt assembly LH (Driver side front pretensioner squib) • Center airbag sensor assembly

WIRING DIAGRAM

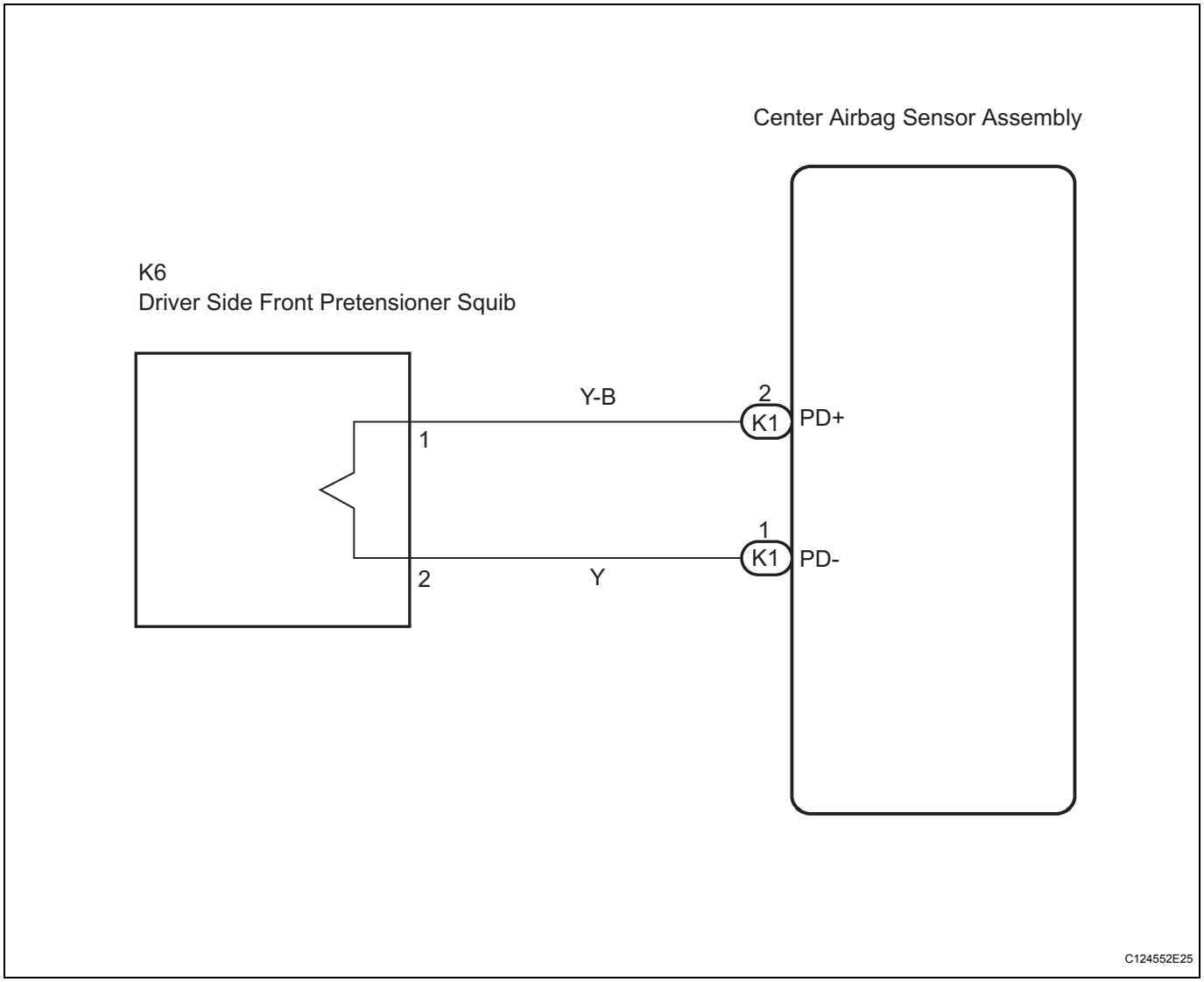

INSPECTION PROCEDURE

HINT:

- Perform the simulation method by selecting the "check mode" (signal check) with the intelligent tester (See page RS-37).
- After selecting the "check mode" (signal check), perform the simulation method by wiggling each connector of the airbag system or driving the vehicle on a city or rough road (See page RS-37).

1	CHECK FRONT SEAT OUTER BELT ASSEMBLY LH (DRIVER SIDE FRONT PRETENSIONER SQUIB)

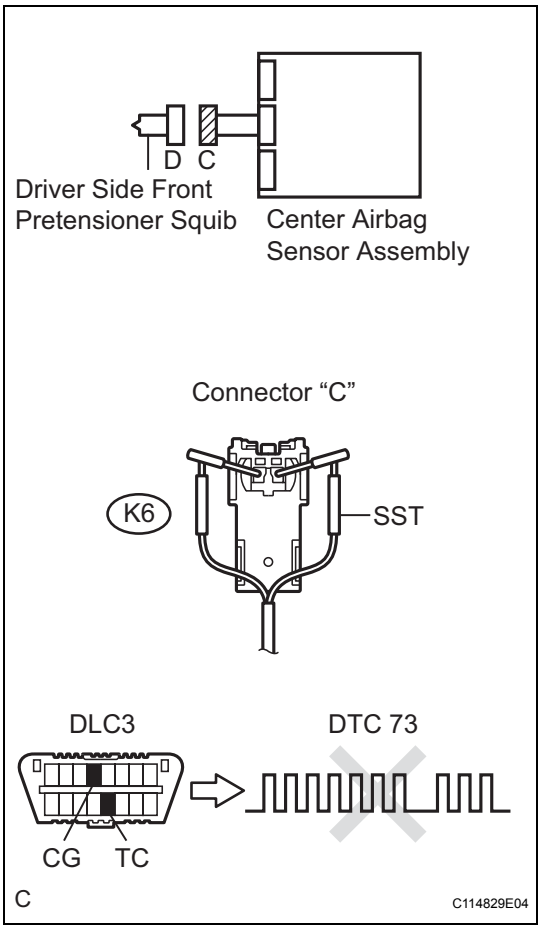

(a) Turn the ignition switch off.
(b) Disconnect the negative (-) terminal cable from the battery, and wait for at least 90 seconds.
(c) Disconnect the connectors from the front seat outer belt assembly LH.
(d) Connect the white wire side of SST (resistance 2.1 Ω) to connector "C".
CAUTION:
Never connect a tester to the front seat outer belt assembly LH (driver side front pretensioner squib) for measurement, as this may lead to a serious injury due to airbag deployment.
NOTICE:
- **Do not forcibly insert the SST into the terminals of the connector when connecting.**
- **Insert straight the SST into the terminals of the connector.**

SST 09843-18060

(e) Connect the negative (-) terminal cable to the battery, and wait for at least 2 seconds.
(f) Turn the ignition switch on (IG), and wait for at least 60 seconds.
(g) Clear the DTCs stored in memory (See page RS-34).
(h) Turn the ignition switch off.
(i) Turn the ignition switch on (IG), and wait for at least 60 seconds.
(j) Check the DTCs (See page RS-34).
OK:
DTC B1900, B1901, B1902, B1903 or 73 is not output.
HINT:
Codes other than DTC B1900, B1901, B1902, B1903 and 73 may be output at this time, but they are not related to this check.

NG → **REPLACE FRONT SEAT OUTER BELT ASSEMBLY LH**

OK

2	CHECK CONNECTOR

(a) Turn the ignition switch off.
(b) Disconnect the negative (-) terminal cable from the battery, and wait for at least 90 seconds.
(c) Disconnect the SST from connector "C".
(d) Check that the floor wire connector (on the front seat outer belt assembly LH side) is not damaged.

OK:
The lock button is not disengaged, or the claw of the lock is not deformed or damaged.

NG → **REPAIR OR REPLACE FLOOR WIRE**

OK

3 CHECK FLOOR WIRE (DRIVER SIDE FRONT PRETENSIONER SQUIB CIRCUIT)

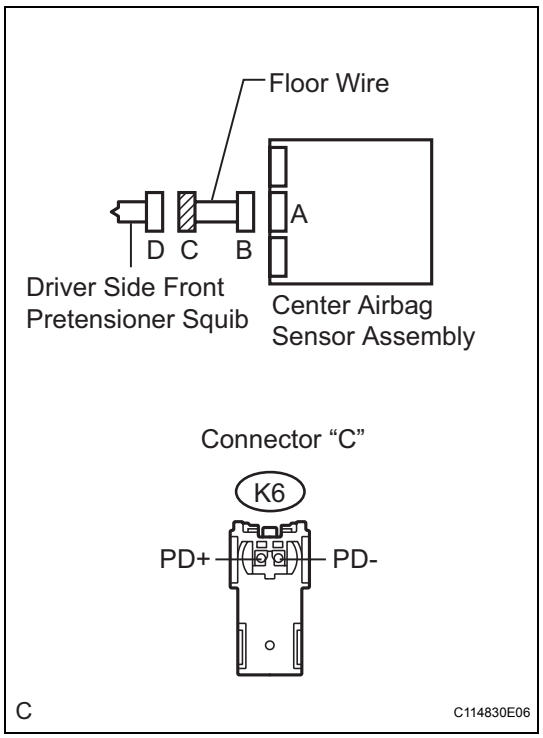

(a) Disconnect the connectors from the center airbag sensor assembly.
(b) Check for a short to B+ in the circuit.
  (1) Connect the negative (-) terminal cable to the battery, and wait for at least 2 seconds.
  (2) Turn the ignition switch on (IG).
  (3) Measure the voltage according to the value(s) in the table below.

Standard voltage

Tester connection	Condition	Specified condition
K6-1 (PD+) - Body ground	Ignition switch on (IG)	Below 1 V
K6-2 (PD-) - Body ground	Ignition switch on (IG)	Below 1 V

(c) Check for an open in the circuit.
  (1) Turn the ignition switch off.
  (2) Disconnect the negative (-) terminal cable from the battery, and wait for at least 90 seconds.
  (3) Measure the resistance according to the value(s) in the table below.

Standard resistance

Tester connection	Condition	Specified condition
K6-1 (PD+) - K6-2 (PD-)	Always	Below 1 Ω

(d) Check for a short to ground in the circuit.
  (1) Measure the resistance according to the value(s) in the table below.

Standard resistance

Tester connection	Condition	Specified condition
K6-1 (PD+) - Body ground	Always	1 MΩ or higher
K6-2 (PD-) - Body ground	Always	1 MΩ or higher

(e) Check for a short in the circuit.
  (1) Release the activation prevention mechanism built into connector "B" (See page RS-28).
  (2) Measure the resistance according to the value(s) in the table below.

Standard resistance

Tester connection	Condition	Specified condition
K6-1 (PD+) - K6-2 (PD-)	Always	1 MΩ or higher

NG → **REPAIR OR REPLACE FLOOR WIRE**

RS

OK

4	CHECK CENTER AIRBAG SENSOR ASSEMBLY

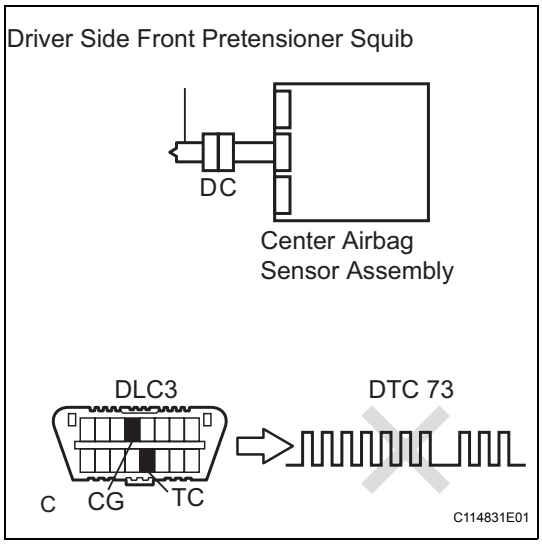

(a) Connect the connectors to the front seat outer belt assembly LH and the center airbag sensor assembly.
(b) Connect the negative (-) terminal cable to the battery, and wait for at least 2 seconds.
(c) Turn the ignition switch on (IG), and wait for at least 60 seconds.
(d) Clear the DTCs stored in memory (See page RS-34).
(e) Turn the ignition switch off.
(f) Turn the ignition switch on (IG), and wait for at least 60 seconds.
(g) Check the DTCs (See page RS-34).

OK:

DTC B1900, B1901, B1902, B1903 or 73 is not output.

HINT:

Codes other than DTC B1900, B1901, B1902, B1903 or 73 may be output at this time, but they are not related to this check.

NG → **REPLACE CENTER AIRBAG SENSOR ASSEMBLY**

OK

USE SIMULATION METHOD TO CHECK

DTC	B1905/74	Short in Front Passenger Side Front Pretensioner Squib Circuit

DTC	B1906/74	Open in Front Passenger Side Front Pretensioner Squib Circuit

DTC	B1907/74	Short to GND in Front Passenger Side Front Pretensioner Squib Circuit

DTC	B1908/74	Short to B+ in Front Passenger Side Front Pretensioner Squib Circuit

DESCRIPTION

The front passenger side front pretensioner squib circuit consists of the center airbag sensor assembly and the front seat outer belt assembly RH.
This circuit instructs the SRS to deploy when deployment conditions are met.
These DTCs are recorded when a malfunction is detected in the front passenger side front pretensioner squib circuit.

DTC No.	DTC Detection Condition	Trouble Area
B1905/74	• The center airbag sensor assembly receives a line short circuit signal 5 times in the front passenger side front pretensioner squib circuit during primary check. • Front passenger side front pretensioner squib malfunction • Center airbag sensor assembly malfunction	• Floor wire No. 2 • Front seat outer belt assembly RH (Front passenger side front pretensioner squib) • Center airbag sensor assembly
B1906/74	• The center airbag sensor assembly receives an open circuit signal in the front passenger side front pretensioner squib circuit for 2 seconds. • Front passenger side front pretensioner squib malfunction • Center airbag sensor assembly malfunction	• Floor wire No. 2 • Front seat outer belt assembly RH (Front passenger side front pretensioner squib) • Center airbag sensor assembly
B1907/74	• The center airbag sensor assembly receives a short circuit to ground signal in the front passenger side front pretensioner squib circuit for 0.5 seconds. • Front passenger side front pretensioner squib malfunction • Center airbag sensor assembly malfunction	• Floor wire No. 2 • Front seat outer belt assembly RH (Front passenger side front pretensioner squib) • Center airbag sensor assembly
B1908/74	• The center airbag sensor assembly receives a short circuit to B+ signal in the front passenger side front pretensioner squib circuit for 0.5 seconds. • Front passenger side front pretensioner squib malfunction • Center airbag sensor assembly malfunction	• Floor wire No. 2 • Front seat outer belt assembly RH (Front passenger side front pretensioner squib) • Center airbag sensor assembly

WIRING DIAGRAM

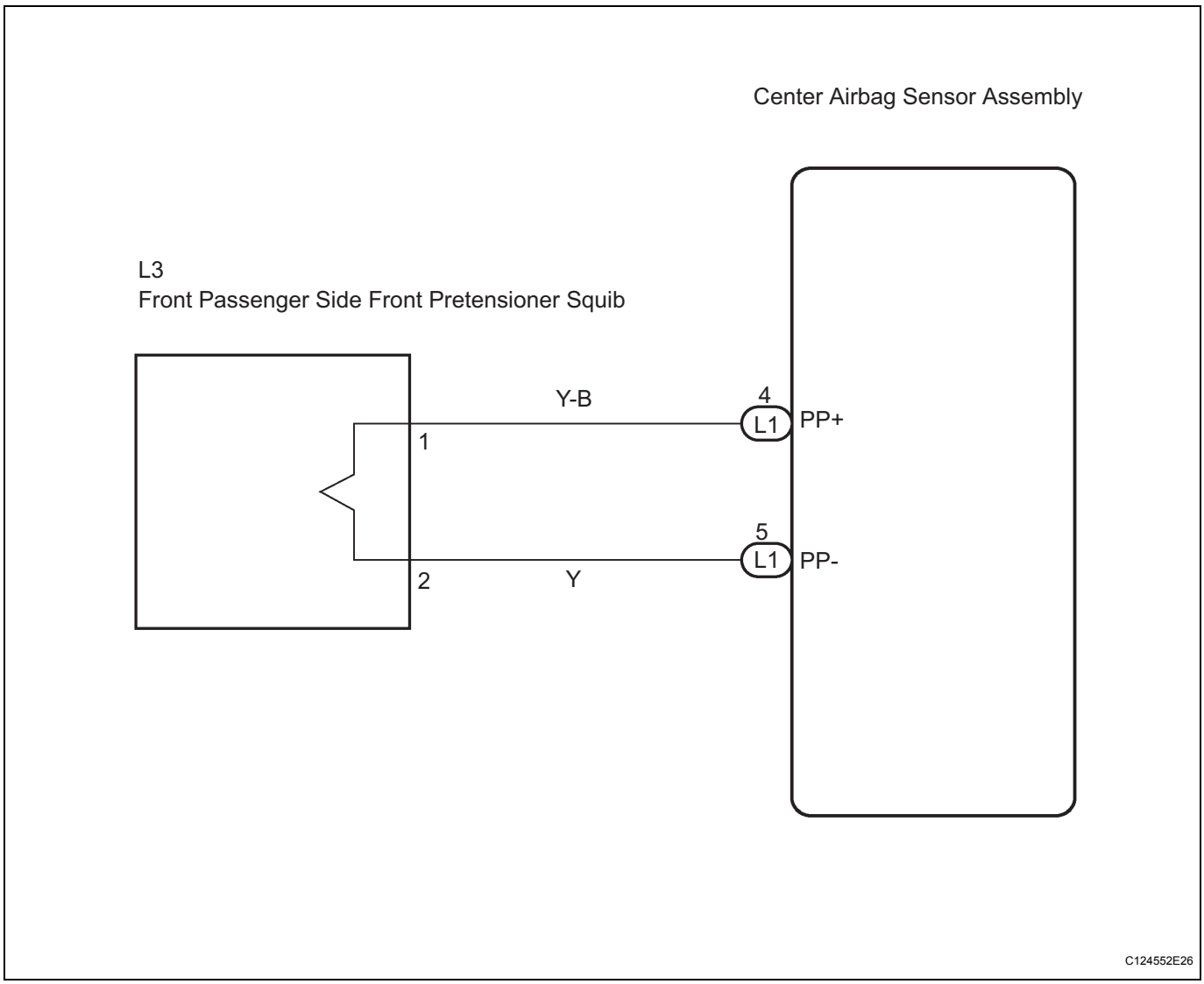

INSPECTION PROCEDURE

HINT:

- Perform the simulation method by selecting the "check mode" (signal check) with the intelligent tester (See page RS-37).
- After selecting the "check mode" (signal check), perform the simulation method by wiggling each connector of the airbag system or driving the vehicle on a city or rough road (See page RS-37).

1	CHECK FRONT SEAT OUTER BELT ASSEMBLY RH (FRONT PASSENGER SIDE FRONT PRETENSIONER SQUIB)

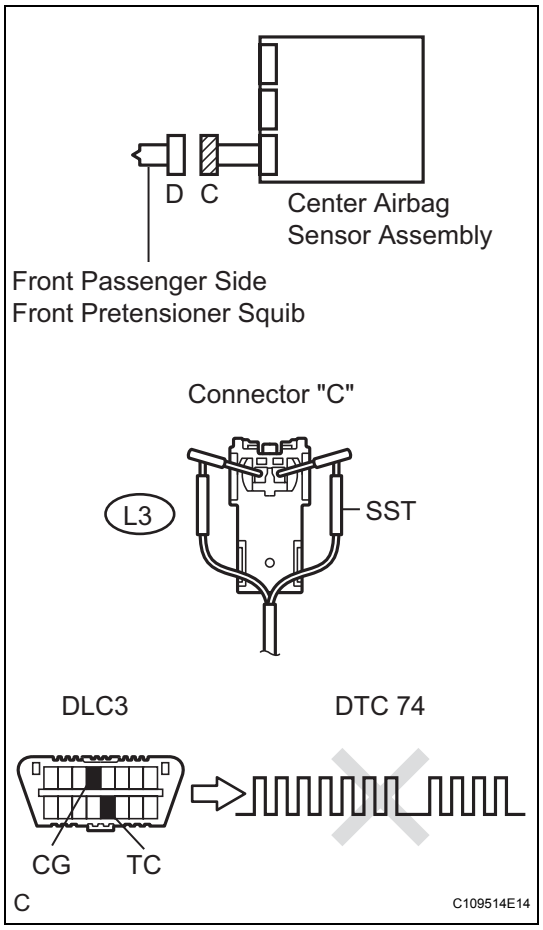

(a) Turn the ignition switch off.
(b) Disconnect the negative (-) terminal cable from the battery, and wait for at least 90 seconds.
(c) Disconnect the connectors from the front seat outer belt assembly RH.
(d) Connect the white wire side of SST (resistance 2.1 Ω) to connector "C".

CAUTION:
Never connect a tester to the front seat outer belt assembly RH (front passenger side front pretensioner squib) for measurement, as this may lead to a serious injury due to airbag deployment.
NOTICE:
- **Do not forcibly insert the SST into the terminals of the connector when connecting.**
- **Insert straight the SST into the terminals of the connector.**

SST 09843-18060

(e) Connect the negative (-) terminal cable to the battery, and wait for at least 2 seconds.
(f) Turn the ignition switch on (IG), and wait for at least 60 seconds.
(g) Clear the DTCs stored in memory (See page RS-34).
(h) Turn the ignition switch off.
(i) Turn the ignition switch on (IG), and wait for at least 60 seconds.
(j) Check the DTCs (See page RS-34).

OK:
DTC B1905, B1906, B1907, B1908 or 74 is not output.

HINT:
Codes other than DTC B1905, B1906, B1907, B1908 and 74 may be output at this time, but they are not related to this check.

NG → **REPLACE FRONT SEAT OUTER BELT ASSEMBLY RH**

OK

2	CHECK CONNECTOR

(a) Turn the ignition switch off.
(b) Disconnect the negative (-) terminal cable from the battery, and wait for at least 90 seconds.
(c) Disconnect the SST from connector "C".
(d) Check that the floor wire No. 2 connector (on the front seat outer belt assembly RH side) is not damaged.

OK:

The lock button is not disengaged, or the claw of the lock is not deformed or damaged.

NG → **REPAIR OR REPLACE FLOOR WIRE NO. 2**

OK

3	CHECK FLOOR WIRE NO. 2 (FRONT PASSENGER SIDE FRONT PRETENSIONER SQUIB CIRCUIT)

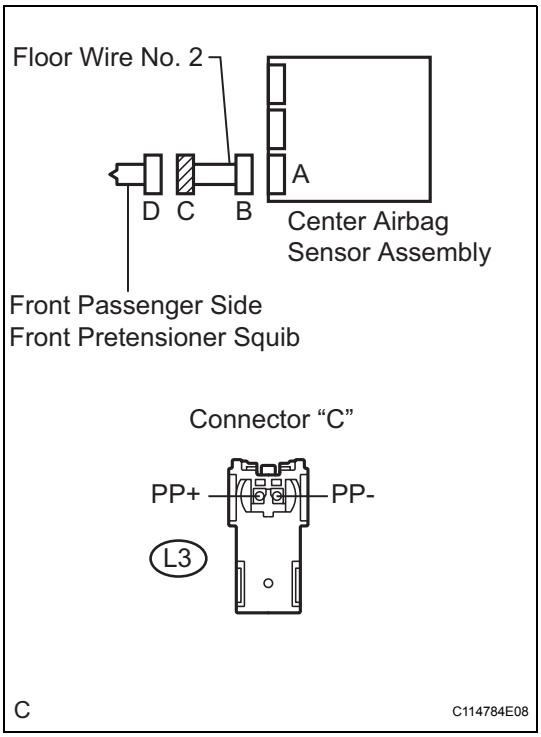

(a) Disconnect the connectors from the center airbag sensor assembly.

(b) Check for a short to B+ in the circuit.

(1) Connect the negative (-) terminal cable to the battery, and wait for at least 2 seconds.

(2) Turn the ignition switch on (IG).

(3) Measure the voltage according to the value(s) in the table below.

Standard voltage

Tester connection	Condition	Specified condition
L3-1 (PP+) - Body ground	Ignition switch on (IG)	Below 1 V
L3-2 (PP-) - Body ground	Ignition switch on (IG)	Below 1 V

(c) Check for an open in the circuit.

(1) Turn the ignition switch off.

(2) Disconnect the negative (-) terminal cable from the battery, and wait for at least 90 seconds.

(3) Measure the resistance according to the value(s) in the table below.

Standard resistance

Tester connection	Condition	Specified condition
L3-1 (PP+) - L3-2 (PP-)	Always	Below 1 Ω

(d) Check for a short to ground in the circuit.

(1) Measure the resistance according to the value(s) in the table below.

Standard resistance

Tester connection	Condition	Specified condition
L3-1 (PP+) - Body ground	Always	1 MΩ or higher
L3-2 (PP-) - Body ground	Always	1 MΩ or higher

(e) Check for a short in the circuit.

(1) Release the activation prevention mechanism built into connector "B" (See page RS-28).

(2) Measure the resistance according to the value(s) in the table below.

Standard resistance

Tester connection	Condition	Specified condition
L3-1 (PP+) - L3-2 (PP-)	Always	1 MΩ or higher

NG → **REPAIR OR REPLACE FLOOR WIRE NO. 2**

RS

OK

4	CHECK CENTER AIRBAG SENSOR ASSEMBLY

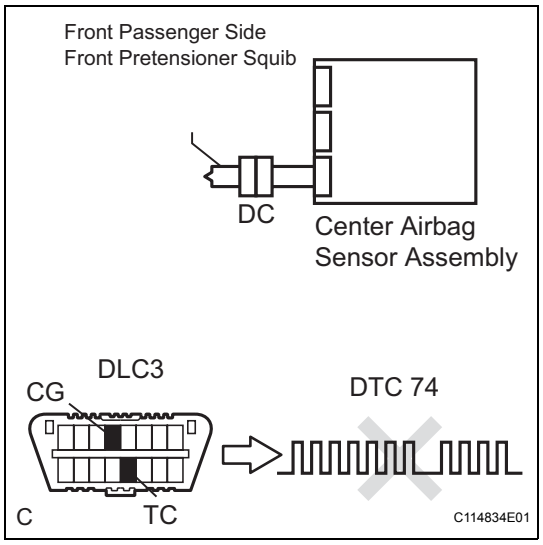

(a) Connect the connectors to the front seat outer belt assembly RH and the center airbag sensor assembly.
(b) Connect the negative (-) terminal cable to the battery, and wait for at least 2 seconds.
(c) Turn the ignition switch on (IG), and wait for at least 60 seconds.
(d) Clear the DTCs stored in memory (See page RS-34).
(e) Turn the ignition switch off.
(f) Turn the ignition switch on (IG), and wait for at least 60 seconds.
(g) Check the DTCs (See page RS-34).

OK:

DTC B1905, B1906, B1907, B1908 or 74 is not output.

HINT:

Codes other than DTC B1905, B1906, B1907, B1908 and 74 may be output at this time, but they are not related to this check.

NG → **REPLACE CENTER AIRBAG SENSOR ASSEMBLY**

OK

USE SIMULATION METHOD TO CHECK

SRS Warning Light Remains ON

DESCRIPTION

The SRS is equipped with a voltage-increase circuit (DC-DC converter) in the center airbag sensor assembly in case the source voltage drops.
When the battery voltage drops, the voltage-increase circuit (DC-DC converter) functions to increase the voltage of the SRS to normal voltage.
A malfunction in this circuit is displayed differently from other codes. The source voltage drop is indicated when the SRS warning light comes on without showing any DTCs.
A malfunction in this circuit is not recorded in the center airbag sensor assembly. The SRS warning light automatically goes off when the source voltage returns to normal.
The SRS warning light is located on the combination meter.
When the SRS is normal, the SRS warning light comes on for approximately 6 seconds after the ignition switch is turned from off to on (IG), and then goes off automatically.
If there is a malfunction in the SRS, the SRS warning light comes on to inform the driver of a problem.
When terminals TC and CG of the DLC3 are connected, the DTCs are displayed by blinking the SRS warning light.

WIRING DIAGRAM

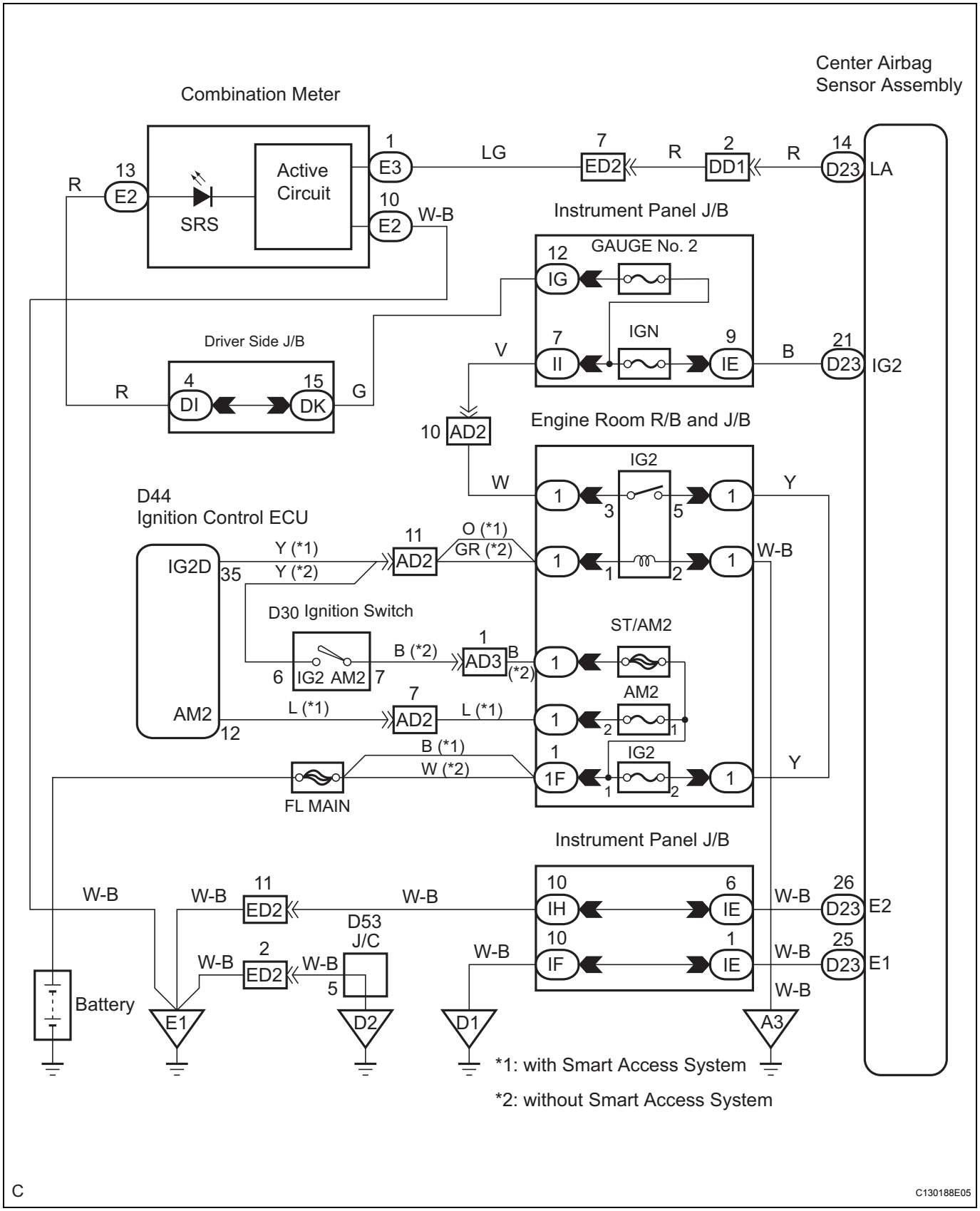

INSPECTION PROCEDURE

1	CHECK BATTERY

(a) Measure the voltage of the battery.
Standard voltage:
11 to 14 V

NG → **REPLACE BATTERY**

OK

2	CHECK WIRE HARNESS (POWER SOURCE)

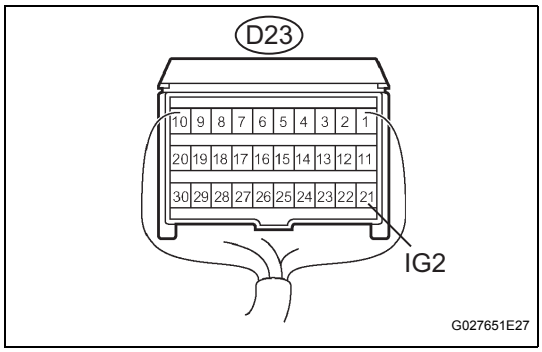

(a) Connect the negative (-) terminal cable to the battery, and wait for at least 2 seconds.
(b) Turn the ignition switch on (IG).
(c) Measure the voltage according to the value(s) in the table below.
Standard voltage

Tester connection	Condition	Specified condition
D23-21 (IG2) - Body ground	Ignition switch on (IG)	10 to 14 V

NG → **REPAIR OR REPLACE WIRE HARNESS (BATTERY - CENTER AIRBAG SENSOR ASSEMBLY)**

OK

3	CHECK WIRE HARNESS (CENTER AIRBAG SENSOR ASSEMBLY - BODY GROUND)

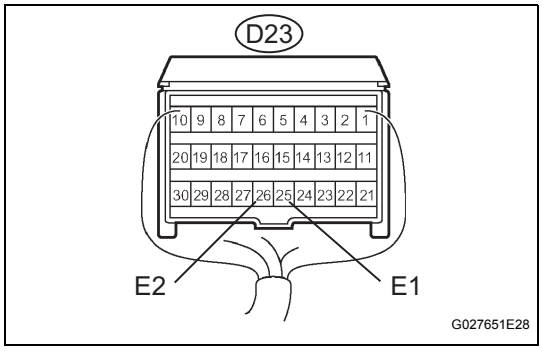

(a) Turn the ignition switch off.
(b) Disconnect the negative (-) terminal cable from the battery, and wait for at least 90 seconds.
(c) Measure the resistance according to the value(s) in the table below.
Standard resistance

Tester connection	Condition	Specified condition
D23-25 (E1) - Body ground	Always	Below 1 Ω
D23-26 (E2) - Body ground	Always	Below 1 Ω

NG → **REPAIR OR REPLACE WIRE HARNESS**

OK

4	CHECK CONNECTION OF CONNECTORS

(a) Disconnect the negative (-) terminal cable from the battery, and wait for at least 90 seconds.

RS

(b) Check that the connectors are properly connected to the center airbag sensor assembly.
OK:
The connectors are connected.

NG → **CONNECT CONNECTORS**

OK

5 CHECK WIRE HARNESS (CENTER AIRBAG SENSOR ASSEMBLY - COMBINATION METER)

Center Airbag Sensor Assembly:

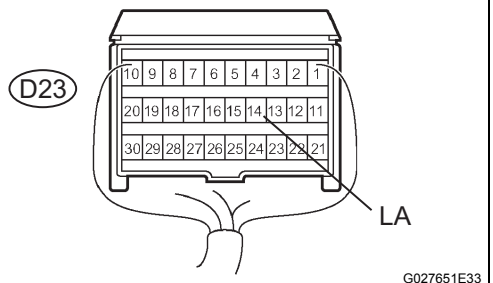

(a) Disconnect the connectors from the combination meter.

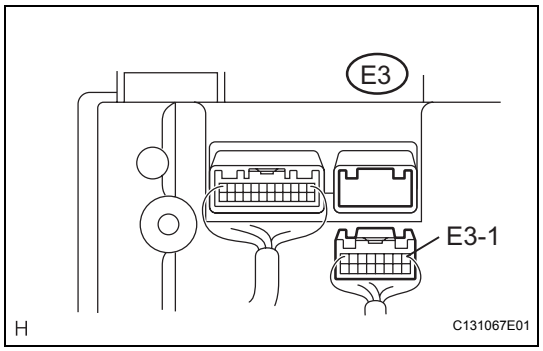

(b) Measure the voltage and resistance according to the value(s) in the table below.

Standard resistance

Tester connection	Condition	Specified condition
D23-14 (LA) - E3-1	Always	Below 1 Ω
D23-14 (LA) - Body ground	Always	1 MΩ or higher

Standard voltage

Tester connection	Condition	Specified condition
D23-14 (LA) - Body ground	Ignition switch on (IG)	Below 1 V

NG → **REPAIR OR REPLACE WIRE HARNESS**

OK

6 CHECK COMBINATION METER

(a) Connect the connectors to the combination meter.
(b) Connect the negative (-) terminal cable to the battery, and wait for at least 2 seconds.
(c) Turn the ignition switch on (IG).
(d) Measure the voltage according to the value(s) in the table below.

Standard voltage

Tester connection	Condition	Specified condition
E2-13 - Body ground	Ignition switch on (IG)	8 to 14 V

NG → **REPLACE COMBINATION METER**

RS

OK

REPLACE CENTER AIRBAG SENSOR ASSEMBLY

SRS Warning Light does not Come ON

DESCRIPTION

The SRS warning light is located on the combination meter.
When the SRS is normal, the SRS warning light comes on for approximately 6 seconds after the ignition switch is turned from off to on (IG), and then goes off automatically.
If there is a malfunction in the SRS, the SRS warning light comes on to inform the driver of a problem.
When terminals TC and CG of the DLC3 are connected, the DTC is displayed by blinking the SRS warning light.

WIRING DIAGRAM

See page RS-191.

INSPECTION PROCEDURE

1	CHECK BATTERY

(a) Measure the voltage of the battery.
Standard voltage:
11 to 14 V

NG → **REPAIR OR REPLACE WIRE HARNESS OR BATTERY**

OK ↓

2	CHECK COMBINATION METER

(a) Connect the negative (-) terminal cable to the battery, and wait for at least 2 seconds.
(b) Turn the ignition switch on (IG).
(c) Check the SRS warning light operation.
OK:
The SRS warning light does not come on.

NG → **REPLACE CENTER AIRBAG SENSOR ASSEMBLY**

OK ↓

3	CHECK WIRE HARNESS (COMBINATION METER - CENTER AIRBAG SENSOR ASSEMBLY)

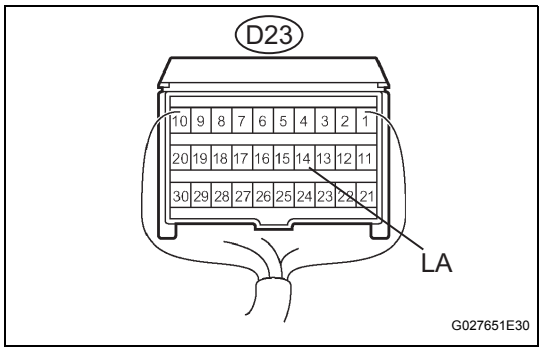

(a) Turn the ignition switch off.
(b) Disconnect the negative (-) terminal cable from the battery, and wait for at least 90 seconds.
(c) Disconnect the connector from the combination meter.
(d) Connect the negative (-) terminal cable to the battery, and wait for at least 2 seconds.
(e) Measure the voltage according to the value(s) in the table below.

Standard voltage

Tester connection	Condition	Specified condition
D23-14 (LA) - Body ground	Ignition switch on (IG)	Below 1 V

NG → **REPAIR OR REPLACE WIRE HARNESS**

OK

REPLACE COMBINATION METER

SYSTEM DIAGRAM

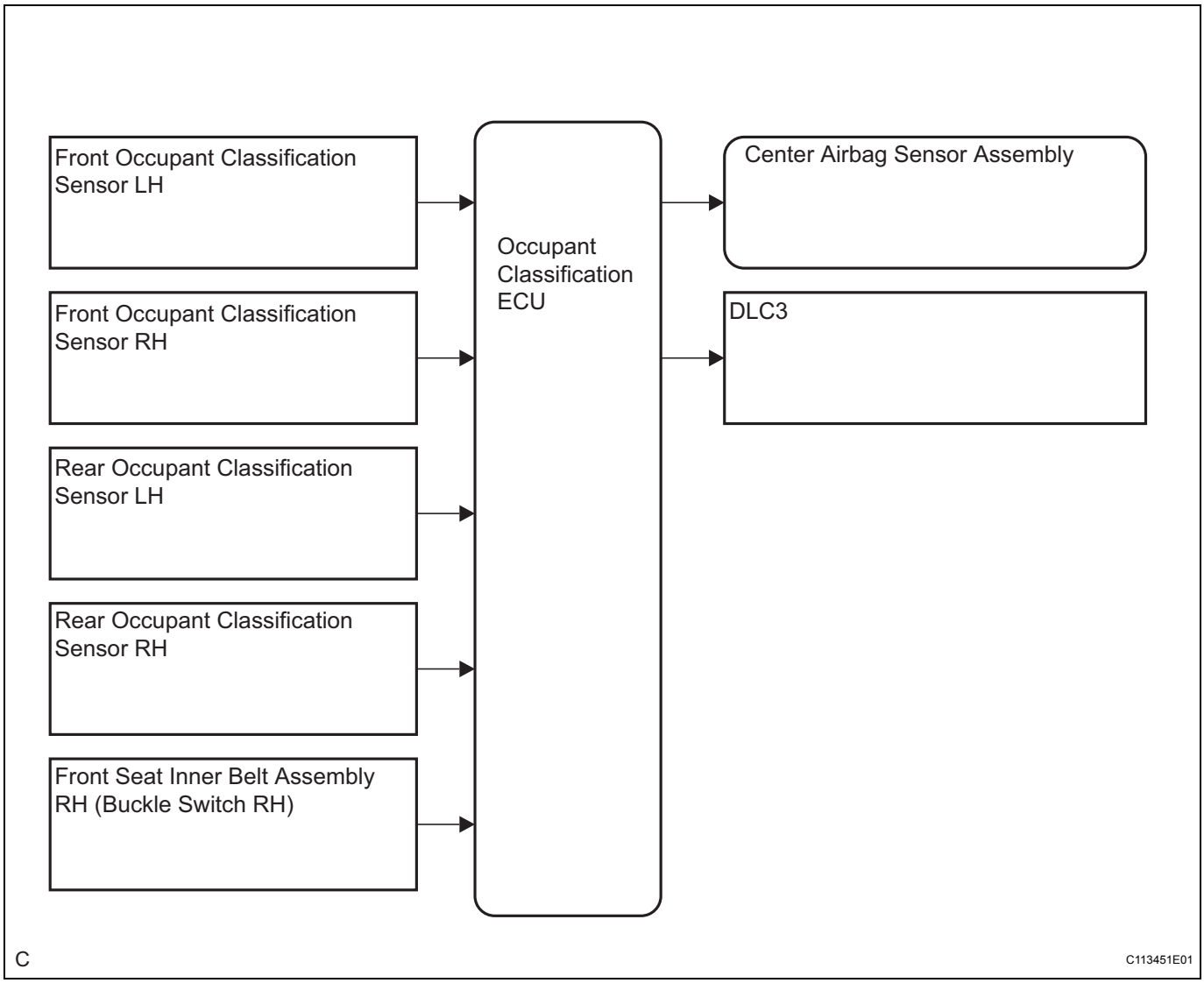

SYSTEM DESCRIPTION

1. DESCRIPTION OF OCCUPANT CLASSIFICATION SYSTEM

(a) GENERAL DESCRIPTION.

(1) In the occupant classification system, the occupant classification ECU calculates the weight of the occupant based on a signal from the occupant classification sensors. This system recognizes the occupant to be a child if it detects a weight of less than 36 kg (79.37 lb), and disables the front passenger airbag and front passenger side-side airbag.

(2) This system is mainly comprised of 4 occupant classification sensors that detect the load on the front passenger seat. The occupant classification ECU controls the system, and the passenger airbag ON/OFF indicator indicates the ON/OFF condition of the front passenger airbag and front passenger side-side airbag.

(b) OCCUPANT CLASSIFICATION SENSOR.

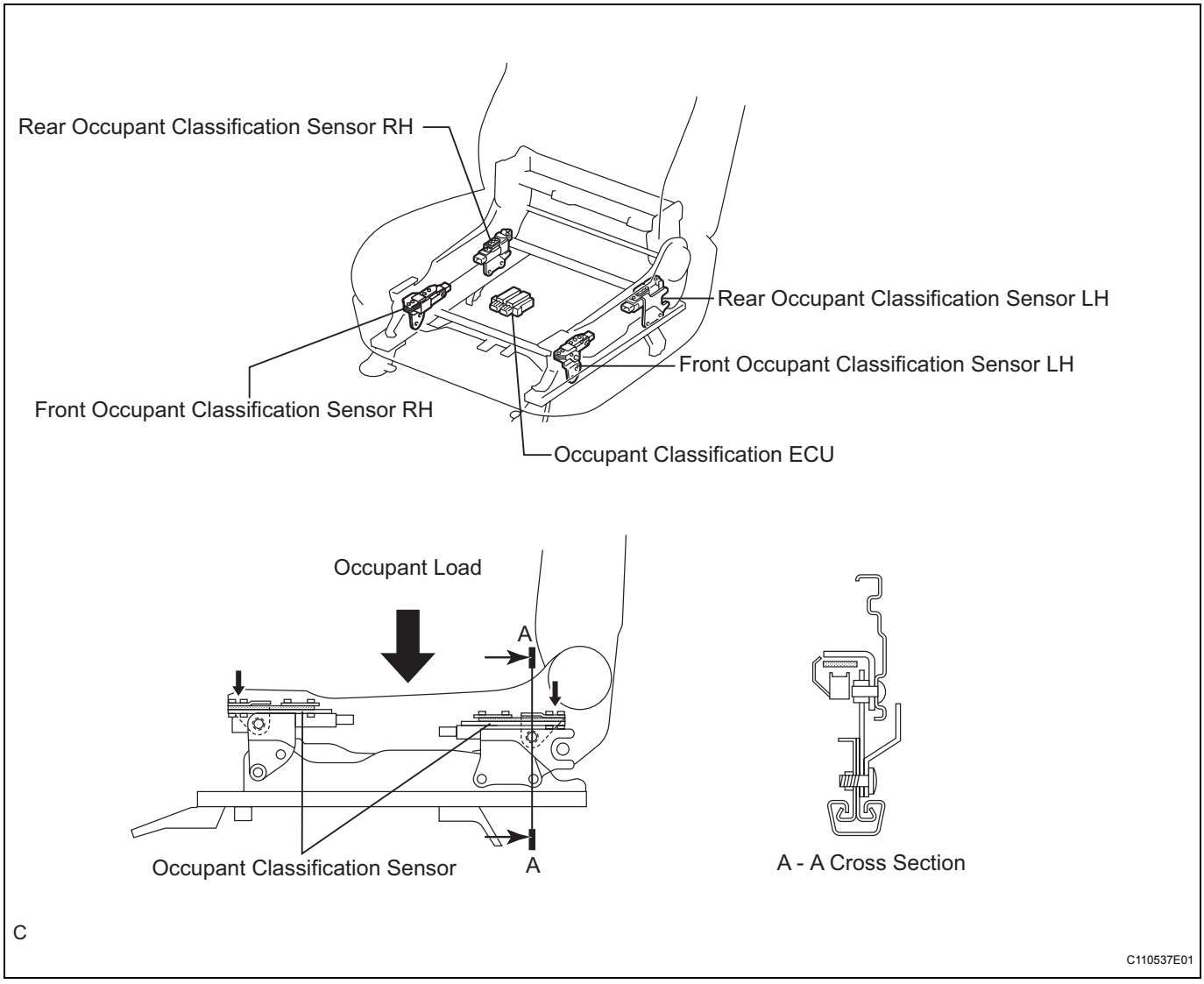

RS

(1) The occupant classification sensors are installed on 4 brackets connecting the seat rail and seat frame. Accordingly, when load is applied to the front passenger seat by an occupant sitting in it, the occupant classification sensors register a distortion.

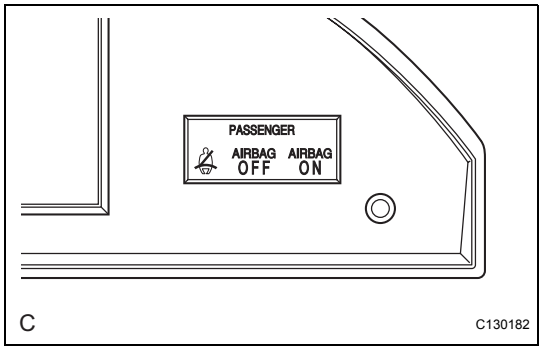

(c) DESCRIPTION FOR PASSENGER AIRBAG ON/OFF INDICATOR.

(1) The passenger airbag ON/OFF indicator is installed on the clock assembly. This indicator informs the driver by ON/OFF indication, whether the occupant classification ECU puts the front passenger airbag assembly into an active state or inactive state.

(2) If a malfunction occurs in the occupant classification system, "OFF" indication of the passenger airbag ON/OFF indicator and the SRS warning light turn on.

HOW TO PROCEED WITH TROUBLESHOOTING

The intelligent tester can be used in steps 4, 6, 8 and 9.

1	VEHICLE BROUGHT TO WORKSHOP

NEXT

2	CUSTOMER PROBLEM ANALYSIS

NEXT

3	PASSENGER AIRBAG ON/OFF INDICATOR CHECK

NEXT

4	DTCs CHECK (Present and Past DTCs)

(a) Check for DTCs.

Result

Result	Proceed to
DTC is output.	A
DTC is not output.	B

B → GO TO PROBLEM SYMPTOMS TABLE

A

5	DTCs CHART

NEXT

6	CIRCUIT INSPECTION

NEXT

7	REPAIR

NEXT

8	CLEAR DTCs (Present and Past DTCs)

(a) Clear for DTCs.

NEXT

9	DTCs CHECK (Present and Past DTCs)

(a) Check for DTCs.

Result

Result	Proceed to
DTC is not output.	A
DTC is output.	B

B → Go to step 5

A

10	SYMPTOM SIMULATION

(a) Check the passenger airbag ON/OFF indicator condition.

Result

Result	Proceed to
Passenger airbag ON/OFF indicator is operate normally.	A
Passenger airbag ON/OFF indicator ("OFF") and SRS warning light comes on.	B

B → Go to step 5

A

11	CONFIRMATION TEST

NEXT

END

HOW TO PROCEED WITH TROUBLESHOOTING

The intelligent tester can be used in steps 4, 6, 8 and 9.

1	VEHICLE BROUGHT TO WORKSHOP

NEXT

2	CUSTOMER PROBLEM ANALYSIS

NEXT

3	PASSENGER AIRBAG ON/OFF INDICATOR CHECK

NEXT

4	DTCs CHECK (Present and Past DTCs)

(a) Check for DTCs.

Result

Result	Proceed to
DTC is output.	A
DTC is not output.	B

B → GO TO PROBLEM SYMPTOMS TABLE

A

5	DTCs CHART

NEXT

6	CIRCUIT INSPECTION

NEXT

7	REPAIR

NEXT

8	CLEAR DTCs (Present and Past DTCs)

(a) Clear for DTCs.

NEXT

9	DTCs CHECK (Present and Past DTCs)

(a) Check for DTCs.

Result

Result	Proceed to
DTC is not output.	A
DTC is output.	B

B → Go to step 5

A

10	SYMPTOM SIMULATION

(a) Check the passenger airbag ON/OFF indicator condition.

Result

Result	Proceed to
Passenger airbag ON/OFF indicator is operate normally.	A
Passenger airbag ON/OFF indicator ("OFF") and SRS warning light comes on.	B

B → Go to step 5

A

11	CONFIRMATION TEST

NEXT

END

INITIALIZATION

1. ZERO POINT CALIBRATION

NOTICE:

Make sure that the front passenger seat is not occupied before performing the operation.

HINT:

Perform the zero point calibration and sensitivity check if any of the following conditions occur.

- The occupant classification ECU is replaced.
- Accessories (seatback tray and seat cover, etc.) are installed.
- The front passenger seat is removed from the vehicle.
- The passenger airbag ON/OFF indicator ("OFF") comes on when the front passenger seat is not occupied.
- The vehicle is brought to the workshop for repair due to an accident or a collision.

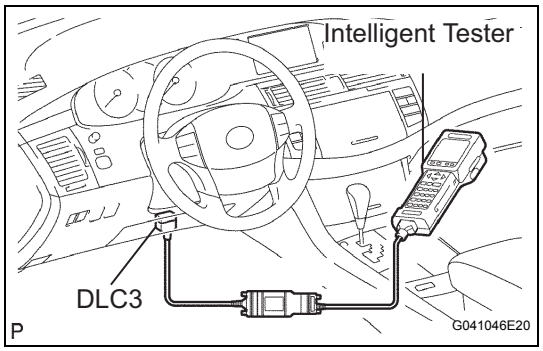

(a) Zero point calibration and sensitivity check procedures.

HINT:

Make sure that zero point calibration has finished normally, and then perform the sensitivity check.

(1) Adjust the seat position according to the table below.

Adjustment Component	Position
Slide Direction	Rearmost position
Reclining Angle	Upright position
Headrest Height	Lowest position
Lifter Height	Lowest position

(2) Connect the intelligent tester to the DLC3.

(3) Turn the ignition switch on (IG).

(4) Perform the zero point calibration by following the prompts on the tester screen.

ZERO POINT CALIBRATION PROCEDURE

"1: DIAGNOSIS" - "1: OBD/MOBD" - "MODEL YEAR" - "MODEL SELECTION" - "AVALON" - Select the option parts" - "9: OCCUPANT DETECT"
Refer to the following screen flow.

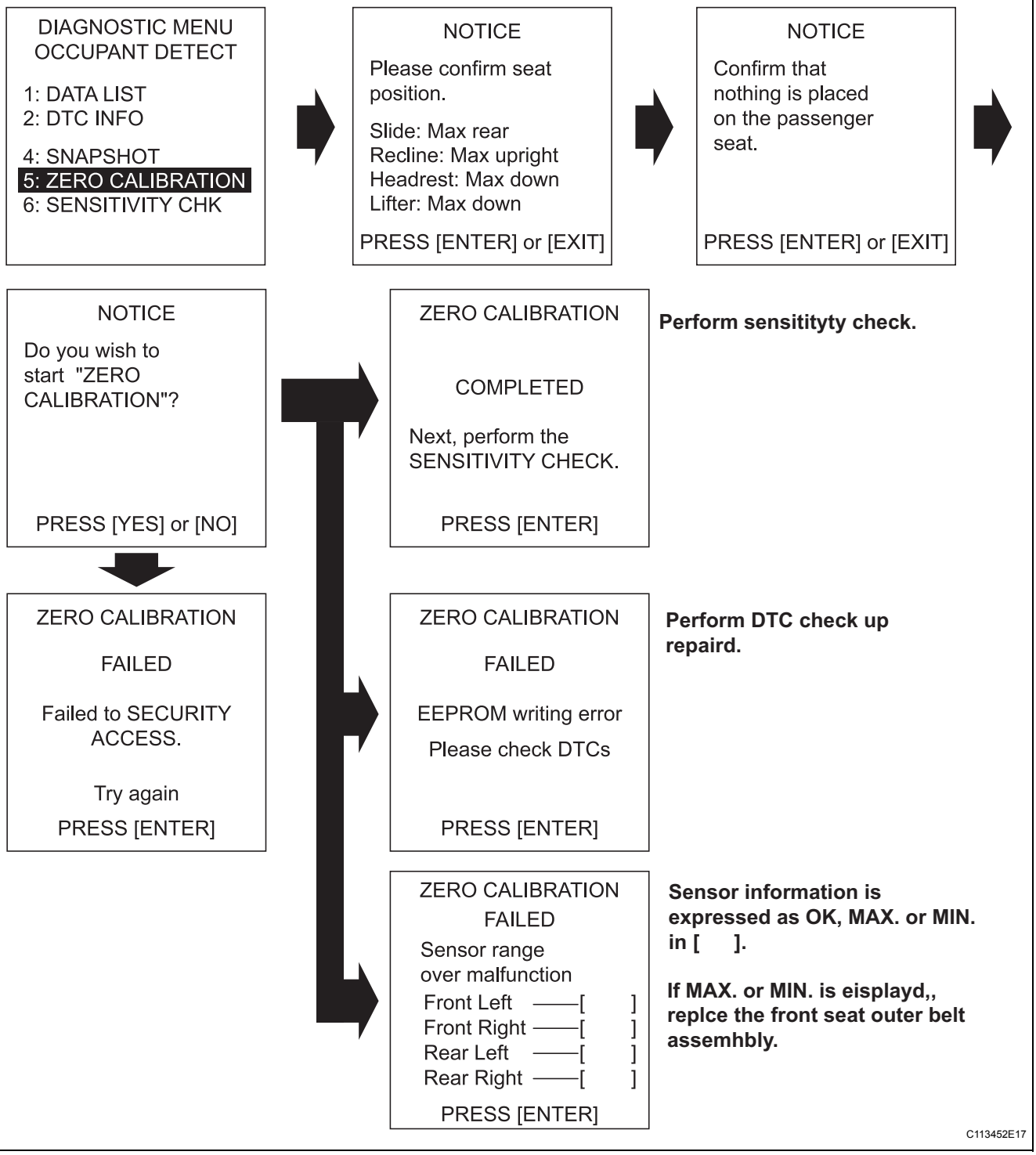

C

C113452E17

RS

HINT:
Refer to the intelligent tester operator's manual for further details.

OK:
"COMPLETE" is displayed.

(5) Perform the sensitivity check by following the prompts on the tester screen.
(6) Confirm that the beginning sensor reading within standard value.
Standard value:
-3.2 to 3.2 kg (-7 to 7 lb)
(7) Place a 30 kg (66.14 lb) weight (eg. a 30 kg (66.14 lb) of lead mass) onto the front passenger seat.
(8) Confirm that the sensitivity is within the standard value.

SENSITIVITY CHECK PROCEDURE

"1: DIAGNOSIS" - "1: OBD/MOBD" - "MODEL YEAR" - "MODEL SELECTION = AVALON" - Select the option parts - "9: OCCUPANT DETECT" - Refer to the following screen flow.

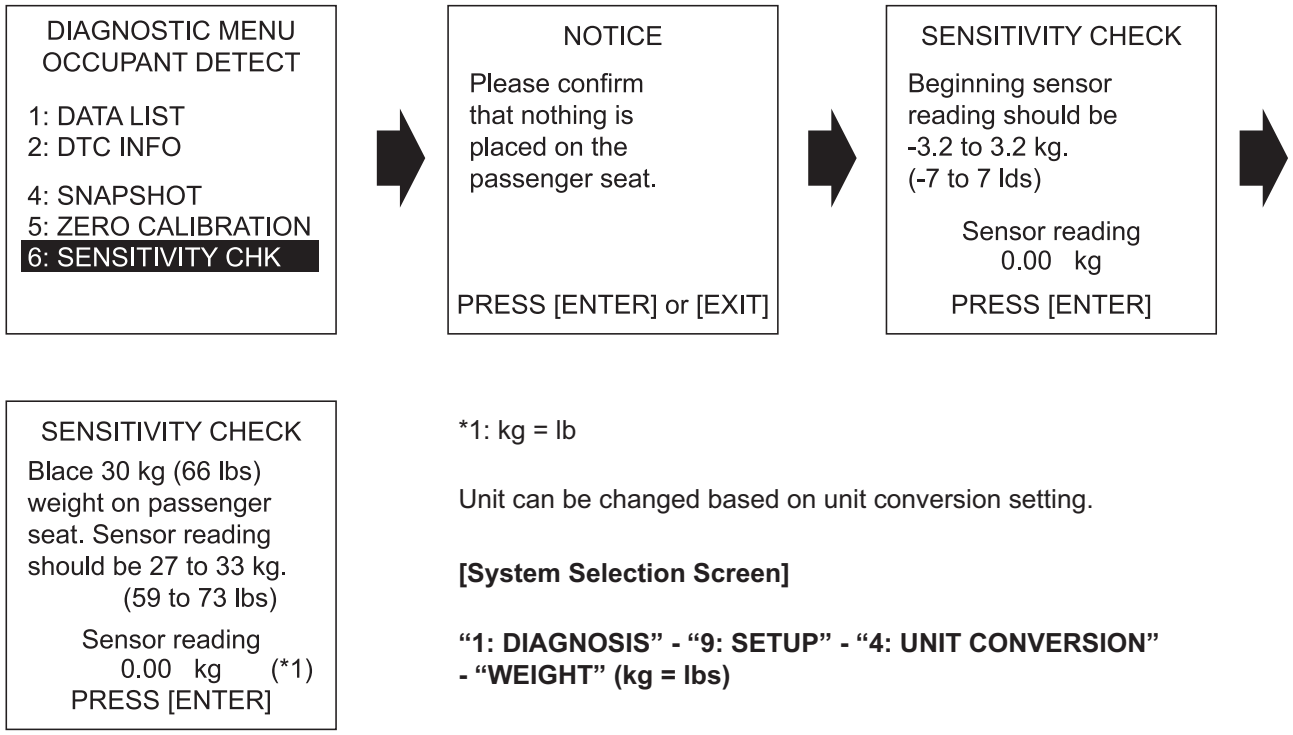

Standard value:
27 to 33 kg (59.52 to 72.75 lb)

HINT:

- When performing the sensitivity check, use a solid metal weight (the check result may not appear properly if the weight made from liquid is used).

RS

- When the sensitivity deviates from the standard value, retighten the bolts of the front passenger seat taking care not to deform the seat rail. After performing this procedure, if the sensitivity is not within the standard value, replace the front seat assembly RH.
- When zero point calibration has not finished normally, replace the front seat assembly RH.

PROBLEM SYMPTOMS TABLE

HINT:
Proceed to the troubleshooting for each circuit in the table below.

OCCUPANT CLASSIFICATION SYSTEM

Symptom	Suspected area	See page
The front passenger seat condition differs from the indication by the passenger airbag ON/OFF indicator (DTC is not output).	Trouble in Passenger Airbag ON/OFF Indicator	RS-298

TERMINALS OF ECU

1. OCCUPANT CLASSIFICATION ECU (for Power seat)

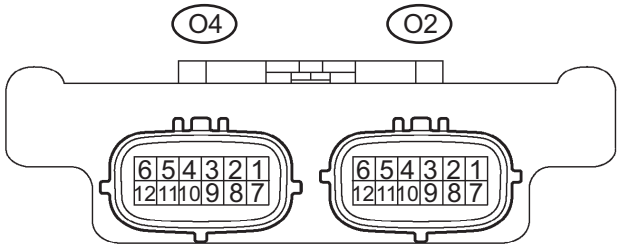

H043128E03

Terminal No. (Symbols)	Wiring Color	Terminal Description	Condition	Specification
O2-1 (SGD1) - O4-3 (GND)	G - W-B	Front occupant classification sensor LH ground line	Always	Below 1 V
O2-2 (SGD2) - O4-3 (GND)	O - W-B	Front occupant classification sensor RH ground line	Always	Below 1 V
O2-3 (SGD3) - O4-3 (GND)	W - W-B	Rear occupant classification sensor LH ground line	Always	Below 1 V
O2-4 (SGD4) - O4-3 (GND)	BR - W-B	Rear occupant classification sensor RH ground line	Always	Below 1 V
O2-5 (SVC3) - O2-3 (SGD3)	GR - W	Rear occupant classification sensor LH power supply line	Ignition switch on (IG), a load is applied to rear occupant classification sensor LH	4.5 to 5.1 V
O2-6 (SVC4) - O2-4 (SGD4)	V - BR	Rear occupant classification sensor RH power supply line	Ignition switch on (IG), a load is applied to rear occupant classification sensor RH	4.5 to 5.1 V
O2-7 (SIG1) - O2-1 (SGD1)	P - G	Front occupant classification sensor LH signal line	Ignition switch on (IG), a load is applied to front occupant classification sensor LH	0.2 to 4.9 V
O2-8 (SIG2) - O2-2 (SGD2)	L - O	Front occupant classification sensor RH signal line	Ignition switch on (IG), a load is applied to front occupant classification sensor RH	0.2 to 4.9 V
O2-9 (SIG3) - O2-3 (SGD3)	Y - W	Rear occupant classification sensor LH signal line	Ignition switch on (IG), a load is applied to rear occupant classification sensor LH	0.2 to 4.9 V
O2-10 (SIG4) - O2-4 (SGD4)	B - BR	Rear occupant classification sensor RH signal line	Ignition switch on (IG), a load is applied to rear occupant classification sensor RH	0.2 to 4.9 V
O2-11 (SVC1) - O2-1 (SGD1)	R - G	Front occupant classification sensor LH power supply line	Ignition switch on (IG), a load is applied to front occupant classification sensor LH	4.5 to 5.1 V
O2-12 (SVC2) - O2-2 (SGD2)	W - O	Front occupant classification sensor RH power supply line	Ignition switch on (IG), a load is applied to front occupant classification sensor RH	4.5 to 5.1 V
O4-1 (+B) - O4-3 (GND)	R - W-B	Battery	Always	10 to 14 V
O4-2 (DIA) - O4-3 (GND)	V - W-B	Diagnosis (DLC3)	Ignition switch on (IG)	Pulse generation

Terminal No. (Symbols)	Wiring Color	Terminal Description	Condition	Specification
O4-3 (GND) - Body ground	W-B - Body ground	Ground	Always	Below 1 V
O4-4 (FSR-) - O4-3 (GND)	B - W-B	Center airbag sensor assembly communication line (-)	Always	Below 1 V
O4-5 (BGND) - O4-3 (GND)	GR - W-B	Passenger side buckle switch ground line	Always	Below 1 V
O4-7 (IG) - O4-3 (GND)	BR - W-B	Power source (ECU-B Fuse)	Ignition switch on (IG)	10 to 14 V
O4-8 (FSR+) - O4-4 (FSR-)	W - B	Center airbag sensor assembly communication line	Ignition switch on (IG)	Pulse generation
O4-9 (BSW) - O4-5 (BGND)	L - GR	Passenger side buckle switch line	Always	Below 1 V

2. OCCUPANT CLASSIFICATION ECU (for Manual seat)

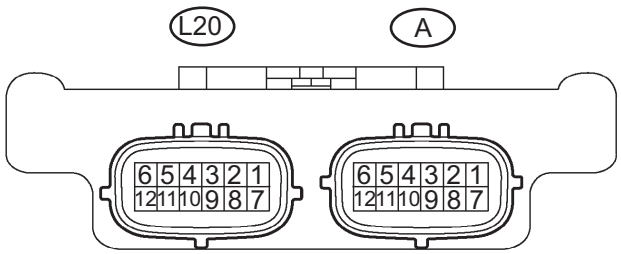

H043128E04

Terminal No. (Symbols)	Wiring Color	Terminal Description	Condition	Specification
A-1 (SGD1) - L20-3 (GND)	G - W-B	Front occupant classification sensor LH ground line	Always	Below 1 V
A-2 (SGD2) - L20-3 (GND)	O - W-B	Front occupant classification sensor RH ground line	Always	Below 1 V
A-3 (SGD3) - L20-3 (GND)	W - W-B	Rear occupant classification sensor LH ground line	Always	Below 1 V
A-4 (SGD4) - L20-3 (GND)	BR - W-B	Rear occupant classification sensor RH ground line	Always	Below 1 V
A-5 (SVC3) - A-3 (SGD3)	GR - W	Rear occupant classification sensor LH power supply line	Ignition switch on (IG), a load is applied to rear occupant classification sensor LH	4.5 to 5.1 V
A-6 (SVC4) - A-4 (SGD4)	V - BR	Rear occupant classification sensor RH power supply line	Ignition switch on (IG), a load is applied to rear occupant classification sensor RH	4.5 to 5.1 V
A-7 (SIG1) - A-1 (SGD1)	P - G	Front occupant classification sensor LH signal line	Ignition switch on (IG), a load is applied to front occupant classification sensor LH	0.2 to 4.9 V
A-8 (SIG2) - A-2 (SGD2)	L - O	Front occupant classification sensor RH signal line	Ignition switch on (IG), a load is applied to front occupant classification sensor RH	0.2 to 4.9 V
A-9 (SIG3) - A-3 (SGD3)	Y - W	Rear occupant classification sensor LH signal line	Ignition switch on (IG), a load is applied to rear occupant classification sensor LH	0.2 to 4.9 V

Terminal No. (Symbols)	Wiring Color	Terminal Description	Condition	Specification
A-10 (SIG4) - A-4 (SGD4)	B - BR	Rear occupant classification sensor RH signal line	Ignition switch on (IG), a load is applied to rear occupant classification sensor RH	0.2 to 4.9 V
A-11 (SVC1) - A-1 (SGD1)	R - G	Front occupant classification sensor LH power supply line	Ignition switch on (IG), a load is applied to front occupant classification sensor LH	4.5 to 5.1 V
A-12 (SVC2) - A-2 (SGD2)	W - O	Front occupant classification sensor RH power supply line	Ignition switch on (IG), a load is applied to front occupant classification sensor RH	4.5 to 5.1 V
L20-1 (+B) - L20-3 (GND)	Y - W-B	Battery	Always	10 to 14 V
L20-2 (DIA) - L20-3 (GND)	G - W-B	Diagnosis (DLC3)	Ignition switch on (IG)	Pulse generation
L20-3 (GND) - Body ground	W-B - Body ground	Ground	Always	Below 1 V
L20-4 (FSR-) - L20-3 (GND)	B - W	Center airbag sensor assembly communication line (-)	Always	Below 1 V
L20-5 (BGND) - L20-3 (GND)	GR - W-B	Passenger side buckle switch ground line	Always	Below 1 V
L20-7 (IG) - L20-3 (GND)	L - W-B	Power source (ECU-B Fuse)	Ignition switch on (IG)	10 to 14 V
L20-8 (FSR+) - L20-4 (FSR-)	W - B	Center airbag sensor assembly communication line	Ignition switch on (IG)	Pulse generation
L20-9 (BSW) - L20-5 (BGND)	R - GR	Passenger side buckle switch line	Always	Below 1 V

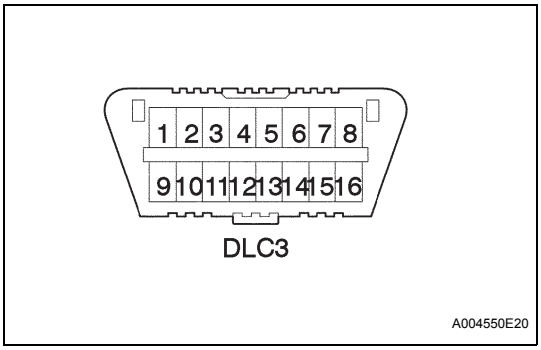

DIAGNOSIS SYSTEM

1. CHECK DLC3

(a) The vehicle's ECM conforms to the ISO 9141-2 for communication protocol. The terminal arrangement of the DLC3 complies with SAE J1962 and meets the ISO 9141-2 format.

Terminal No.	Connection/Voltage or Resistance	Condition
7	Bus + Line/Pulse generation	During Transmission
4	Chassis Ground - Body Ground/Below 1 Ω	Always
16	Battery Positive - Body Ground/10 to 14 V	Always

HINT:

If the display shows a communication error message when connecting the cable of the intelligent tester to the DLC3, turning the ignition switch on (IG) and operating the intelligent tester, there is a problem on the vehicle side or tool side.

- If communication is normal when the tool is connected to another vehicle, inspect the DLC3 on the original vehicle.

- If communication is still not possible when the tool is connected to another vehicle, the problem is probably in the tool itself. Consult the Service Department listed in the tool's instruction manual.

2. SYMPTOM SIMULATION

HINT:

The most difficult case in troubleshooting is when no symptoms occur. In such cases, a thorough customer problem analysis must be carried out. Then the same or similar conditions and environment in which the problem occurred in the customer's vehicle should be simulated. No matter how experienced or skilled a technician may be, if he proceeds to troubleshoot without confirming the problem symptoms, he will likely overlook something important and make a wrong guess at some points in the repair operation.

This leads to a standstill in troubleshooting.

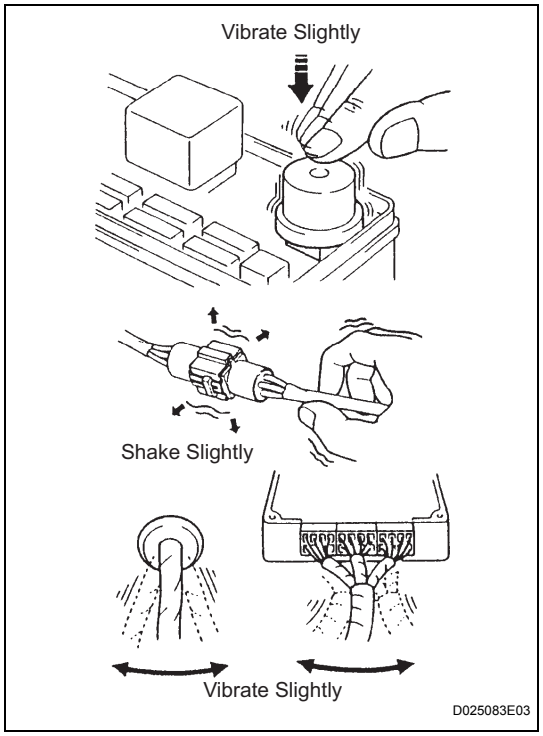

(a) Vibration method: When vibration seems to be the major cause.

HINT:

Perform the simulation method only during the primary check period (for approximately 6 seconds after the ignition switch is turned on (IG)).

(1) Slightly vibrate the part of the sensor considered to be the problem cause with your fingers and check whether the malfunction occurs.

HINT:

Shaking the relays too strongly may result in open relays.

(2) Slightly shake the connector vertically and horizontally.

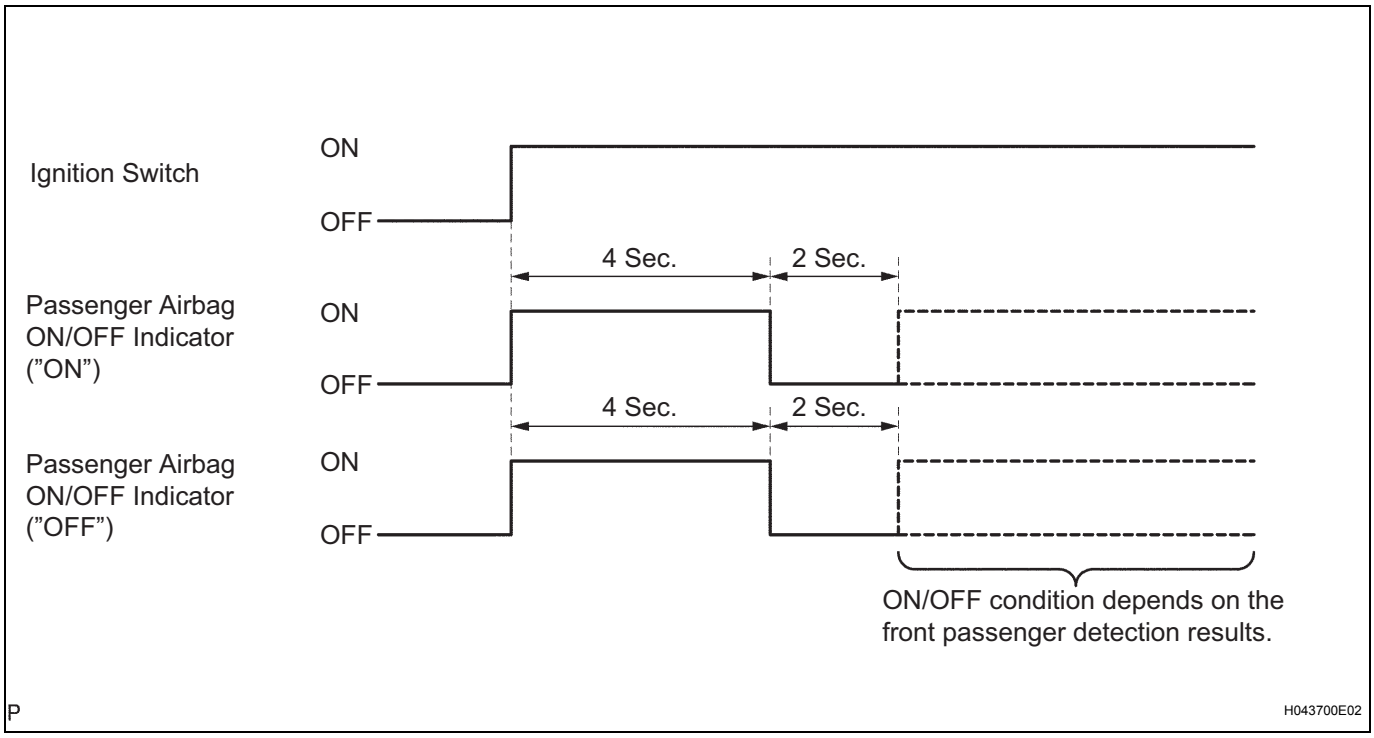

(3) Slightly shake the wire harness vertically and horizontally.
The connector joint and fulcrum of the vibration are the major areas to be checked thoroughly.

(b) Simulation method for DTC B1794: Turn the ignition switch from the off to on (IG), hold for 10 seconds, and back to off again 50 times in a row.
HINT:
DTC B1794 is output if the occupant classification ECU receives the ignition switch off-on (IG)-off signal 50 times in a row when a malfunction occurs in the power circuit for the occupant classification system.

3. FUNCTION OF PASSENGER AIRBAG ON/OFF INDICATOR

(a) Initial check.
(1) Turn the ignition switch on (IG).
(2) The passenger airbag ON/OFF indicator ("ON" and "OFF") come on for approximately 4 seconds, then goes off for approximately 2 seconds.
(3) Approximately 6 seconds after the ignition switch is turned to on (IG), the passenger airbag ON/OFF indicator will be ON/OFF depending on the conditions listed below.

Condition	ON Indicator	OFF Indicator
Vacant	OFF	OFF
Adult is seated.	ON	OFF
Child is seated.	OFF	ON
Child restraint system is set.	OFF	ON

Condition	ON Indicator	OFF Indicator
Front passenger occupant classification system failure	OFF	ON

HINT:

- The passenger airbag ON/OFF indicator is based on the timing chart below in order to check the indicator light circuit.
- When the occupant classification system has trouble, both the SRS warning light and the passenger airbag ON/OFF indicator ("OFF") come on. In this case, check the DTCs in the "AIRBAG SYSTEM" first.

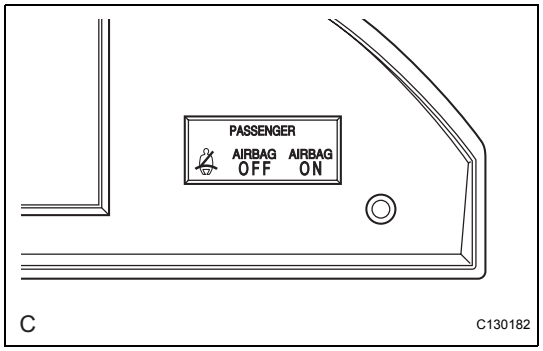

4. CHECK PASSENGER AIRBAG ON/OFF INDICATOR

(a) Turn the ignition switch on (IG).

(b) Check that the passenger airbag ON/OFF indicator ("ON" and "OFF") come on for approximately 4 seconds, then goes off for approximately 2 seconds.

HINT:

Refer to the table in step 3 regarding the passenger airbag ON/OFF indicator when the ignition switch is turned to on (IG) and approximately 6 seconds pass.

DTC CHECK / CLEAR

1. DTC CHECK

HINT:
When DTC B1650/32 is detected as a result of troubleshooting for "AIRBAG SYSTEM", perform troubleshooting for the occupant classification system.

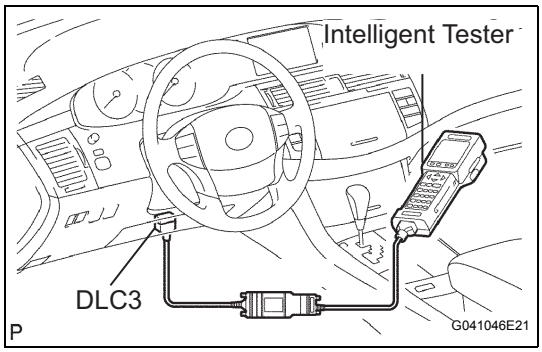

(a) Check the DTCs.
  (1) Connect the intelligent tester to the DLC3.
  (2) Turn the ignition switch on (IG).
  (3) Check the DTCs by following the prompts on the tester screen.
    HINT:
    Refer to the intelligent tester operator's manual for further details.

(b) Clear the DTCs.
  (1) Connect the intelligent tester to the DLC3.
  (2) Turn the ignition switch on (IG).
  (3) Clear the DTCs by following the prompts on the tester screen.
    HINT:
    Refer to the intelligent tester operator's manual for further details.

DATA LIST / ACTIVE TEST

HINT:
By accessing the DATA LIST displayed by the intelligent tester, you can perform such functions as reading the values of switches and sensors without removing any parts. Reading the DATA LIST is the first step of troubleshooting and is one method to shorten labor time.

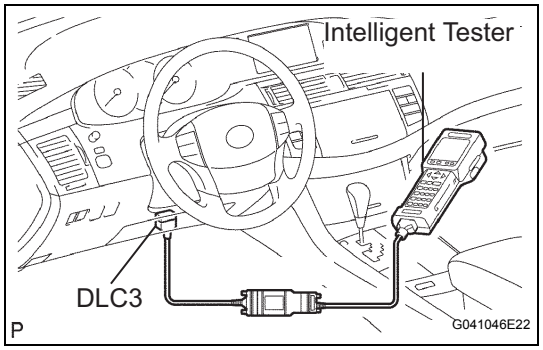

1. DATA LIST FOR OCCUPANT CLASSIFICATION ECU

(a) Connect the intelligent tester to the DLC3.
(b) Turn the ignition switch on (IG).
(c) Following the display on the tester screen, read the "DATA LIST".

Item	Measurement Item/ Range (Display)	Normal Condition	Diagnostic Note
IG SW	Ignition switch condition/ ON: Ignition switch on (IG) OFF: Ignition switch off	ON/OFF	-
P BUCKLE SW	Buckle switch (Passenger side)/ SET: The seat belt is fastened UNSET: The seat belt is not fastened NG: Data is not determined	SET	When the seat belt (Passenger side) is fastened
PASSENGER CLASS	Passenger classification/ AM50: Adult (more than 54 kg (119.05 lb)) is seated AF05: Adult (36 to 54 kg (79.37 to 119.05 lb)) is seated CHILD: Child (less than 36 kg (79.37 lb)) is seated CRS: Child restraint system (less than 7 kg (15.43 lb)) and passenger side buckle switch is ON, then 7 to 36 kg (15.43 to 79.37 lb) is set OFF: Vacant	AM50/AF05/CHILD/CRS/OFF	-
SENS RANGE INF	Sensor range information/ OK: The value of a sensor is within the range NG: The value of a sensor is over the range	OK	-
FL SENS RANGE	Front left sensor range information/ OK: Sensor range is -17 to 27 kg (-37.48 to 59.52 lb) Min.: Less than -17 kg (-37.48 lb) Max.: More than 27 kg (59.52 lb)	OK	-
FR SENS RANGE	Front right sensor range information/ OK: Sensor range is -17 to 27 kg (-37.48 to 59.52 lb) Min.: Less than -17 kg (-37.48 lb) Max.: More than 27 kg (59.52 lb)	OK	-

Item	Measurement Item/ Range (Display)	Normal Condition	Diagnostic Note
RL SENS RANGE	Rear left sensor range information/ OK: Sensor range is -17 to 37 kg (-37.48 to 81.57 lb) Min.: Less than -17 kg (-37.48 lb) Max.: More than 37 kg (81.57 lb)	OK	-
RR SENS RANGE	Rear right sensor range information/ OK: Sensor range is -17 to 37 kg (-37.48 to 81.57 lb) Min.: Less than -17 kg (-37.48 lb) Max.: More than 37 kg (81.57 lb)	OK	-
FL SENS VOL	Front left sensor voltage/ Min.: 0 V Max.: 19.8 V	0 to 4.7 V	-
FR SENS VOL	Front right sensor voltage/ Min.: 0 V Max.: 19.8 V	0 to 4.7 V	-
RL SENS VOL	Rear left sensor voltage/ Min.: 0 V Max.: 19.8 V	0 to 4.7 V	-
RR SENS VOL	Rear right sensor voltage/ Min.: 0 V Max.: 19.8 V	0 to 4.7 V	-
FL SENS WEIGHT	Front left sensor weight information/ Min.: -17 kg (-37.48 lb) Max.: 27 kg (59.52 lb)	-17 to 27 kg (-37.48 to 59.52 lb)	-
FR SENS WEIGHT	Front right sensor weight information/ Min.: -17 kg (-37.48 lb) Max.: 27 kg (59.52 lb)	-17 to 27 kg (-37.48 to 59.52 lb)	-
RL SENS WEIGHT	Rear left sensor weight information/ Min.: -17 kg (-37.48 lb) Max.: 37 kg (81.57 lb)	-17 to 37 kg (-37.48 to 81.57 lb)	-
RR SENS WEIGHT	Rear right sensor weight information/ Min.: -17 kg (-37.48 lb) Max.: 37 kg (81.57 lb)	-17 to 37 kg (-37.48 to 81.57 lb)	-
TOTAL WEIGHT	Total weight information/ Min.: -68 kg (-149.91 lb) Max.: 128 kg (282.19 lb)	-68 to 128 kg (-149.91 to 282.19 lb)	-
#CODES	Number of DTC recorded/ Min.: 0, Max.: 255	0	-

DIAGNOSTIC TROUBLE CODE CHART

1. DTCS FOR OCCUPANT CLASSIFICATION SYSTEM

If a trouble code is displayed during the DTC check, check the circuit listed for the code in the table below (Proceed to the page listed for that circuit).

OCCUPANT CLASSIFICATION SYSTEM

DTC No.	Detection Item	Trouble Area	See page
B1771	Passenger Side Buckle Switch Circuit Malfunction	1. Front seat inner belt assembly RH 2. Occupant classification ECU 3. Floor wire No.2 4. Front seat wire RH (*1)	RS-219
B1780	Front Occupant Classification Sensor LH Circuit Malfunction	1. Front seat assembly RH (Front occupant classification sensor LH) 2. Occupant classification ECU 3. Front seat wire RH	RS-225
B1781	Front Occupant Classification Sensor RH Circuit Malfunction	1. Front seat assembly RH (Front occupant classification sensor RH) 2. Occupant classification ECU 3. Front seat wire RH	RS-232
B1782	Rear Occupant Classification Sensor LH Circuit Malfunction	1. Front seat assembly RH (Rear occupant classification sensor LH) 2. Occupant classification ECU 3. Front seat wire RH	RS-239
B1783	Rear Occupant Classification Sensor RH Circuit Malfunction	1. Front seat assembly RH (Rear occupant classification sensor RH) 2. Occupant classification ECU 3. Front seat wire RH	RS-246
B1785	Front Occupant Classification Sensor LH Collision Detection	1. Front seat assembly RH (Front occupant classification sensor LH) 2. Occupant classification ECU	RS-253
B1786	Front Occupant Classification Sensor RH Collision Detection	1. Front seat assembly RH (Front occupant classification sensor RH) 2. Occupant classification ECU	RS-257
B1787	Rear Occupant Classification Sensor LH Collision Detection	1. Front seat assembly RH (Rear occupant classification sensor LH) 2. Occupant classification ECU	RS-261
B1788	Rear Occupant Classification Sensor RH Collision Detection	1. Front seat assembly RH (Rear occupant classification sensor RH) 2. Occupant classification ECU	RS-265
B1790	Center Airbag Sensor Assembly Communication Circuit Malfunction	1. Occupant classification ECU 2. Center airbag sensor assembly 3. Floor wire No.2 4. Front seat wire RH (*1)	RS-269
B1793	Occupant Classification Sensor Power Supply Circuit Malfunction	1. Front seat assembly RH (Occupant classification sensors) 2. Front seat wire RH (*1) 3. Occupant classification ECU	RS-281
B1794	Open in Occupant Classification ECU Battery Positive Line	1. Battery 2. ECU-B fuse 3. Floor wire No. 2 4. Front seat wire RH (*1) 5. Occupant classification ECU	RS-288

DTC No.	Detection Item	Trouble Area	See page
B1795	Occupant Classification ECU Malfunction	1. Occupant classification ECU 2. Floor wire No.2 3. Front seat wire RH (*1) 4. Front seat inner belt assembly RH	RS-293
B1796	Sleep Operation Failure of Occupant Classification ECU	Occupant classification ECU	RS-296

*1: for Power Seat

DTC	B1771	Passenger Side Buckle Switch Circuit Malfunction

DESCRIPTION

The passenger side buckle switch circuit consists of the occupant classification ECU and the front seat inner belt assembly RH.
DTC B1771 is recorded when a malfunction is detected in the passenger side buckle switch circuit.
Troubleshoot DTC B1771 first when the DTC B1771 and B1795 are output simultaneously.

DTC No.	DTC Detecting Condition	Trouble Area
B1771	• The occupant classification ECU receives a line short circuit signal, an open circuit signal, a short circuit to ground signal or a short circuit to B+ signal in the passenger side buckle switch circuit for 2 seconds. • Passenger side buckle switch malfunction • Occupant classification ECU malfunction	• Front seat inner belt assembly RH • Floor wire No.2 • Front seat wire RH (for Power seat) • Occupant classification ECU

WIRING DIAGRAM

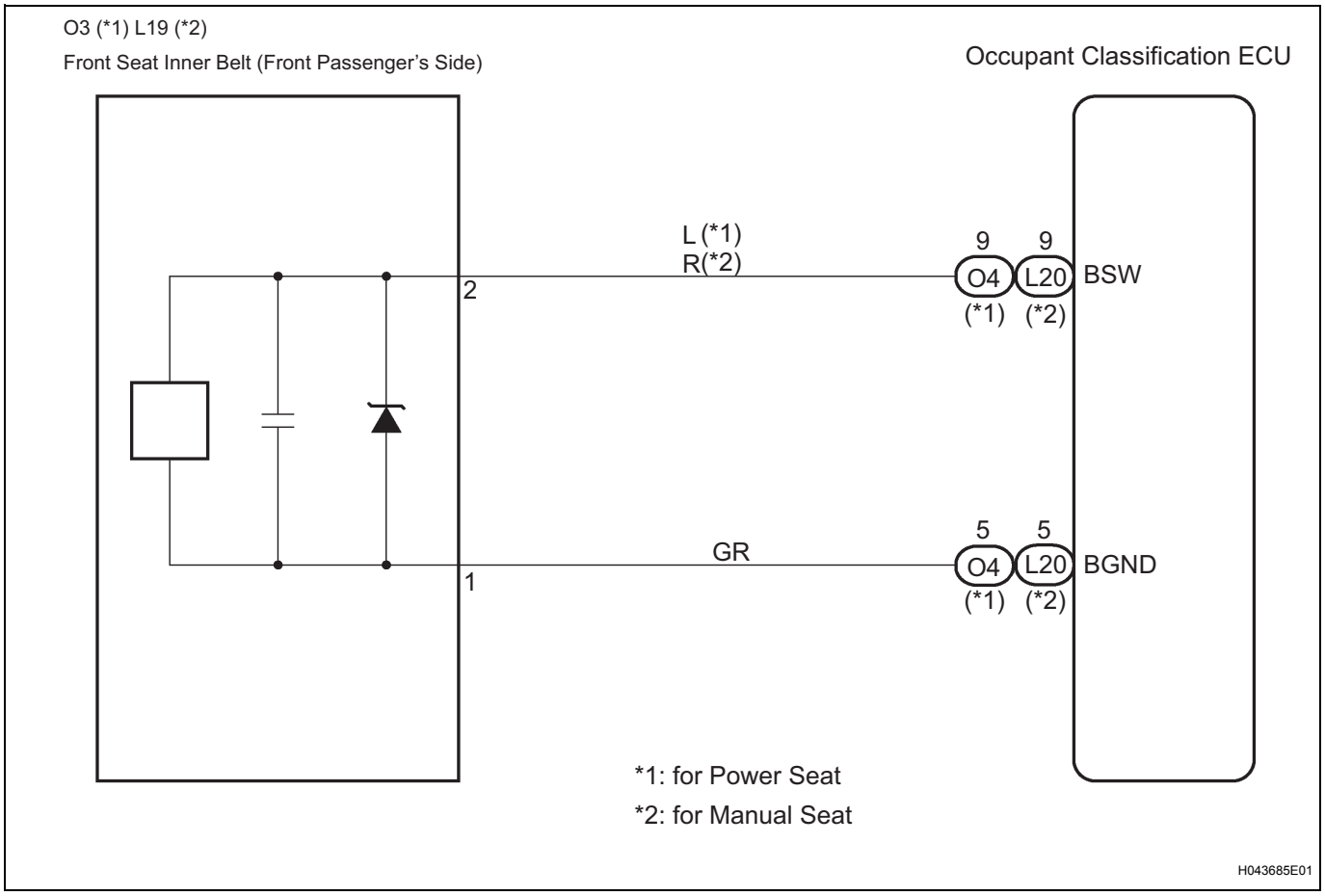

INSPECTION PROCEDURE

HINT:

- If troubleshooting (wire harness inspection) is difficult to perform, remove the front passenger seat installation bolts to see the under surface of seat cushion.
- In the above case, hold the seat so that it does not fall down. Holding the seat for a long period of time may cause a problem, such as seat rail deformation. Hold the seat only as necessary.

1	CHECK DTC

(a) Turn the ignition switch on (IG).
(b) Clear the DTCs stored in the center airbag sensor assembly (See page RS-34).
(c) Clear the DTCs stored in the occupant classification ECU (See page RS-215).
(d) Turn the ignition switch off.
(e) Turn the ignition switch on (IG).
(f) Check the DTCs (See page RS-215).

OK:

DTC B1771 is not output.

HINT:
Codes other than DTC B1771 may be output at this time, but they are not related to this check.

OK → **USE SIMULATION METHOD TO CHECK**

NG

2	CHECK CONNECTION OF CONNECTORS

(a) Turn the ignition switch off.
(b) Disconnect the negative (-) terminal cable from the battery.
(c) Check that the connectors are properly connected to the occupant classification ECU and the front seat inner belt assembly RH.

OK:

The connectors are connected.

NG → **CONNECT CONNECTORS, THEN GO TO STEP 1**

OK

3 CHECK WIRE HARNESS (SHORT TO B+)

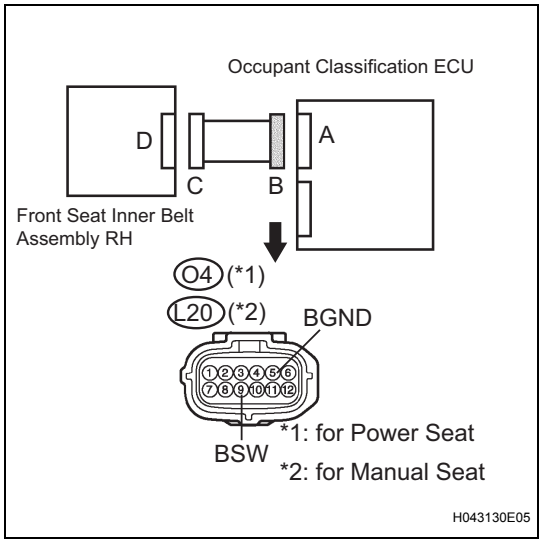

(a) Disconnect the connectors from the occupant classification ECU and the front seat inner belt assembly RH.
(b) Connect the negative (-) terminal cable to the battery.
(c) Turn the ignition switch on (IG).
(d) Measure the voltage according to the value(s) in the table below.

Voltage

Tester connection	Condition	Specified condition
O4-9 (BSW) - Body ground (*1)	Ignition switch on (IG)	Below 1 V
O4-5 (BGND) - Body ground (*1)	Ignition switch on (IG)	Below 1 V
L20-9 (BSW) - Body ground (*2)	Ignition switch on (IG)	Below 1 V
L20-5 (BGND) - Body ground (*2)	Ignition switch on (IG)	Below 1 V

*1: for Power seat
*2: for Manual seat

NG → **REPAIR OR REPLACE FLOOR WIRE NO.2 (W/O POWER SEAT)**

NG → **REPAIR OR REPLACE FRONT SEAT WIRE RH (W/ POWER SEAT)**

OK

4 CHECK WIRE HARNESS (OPEN)

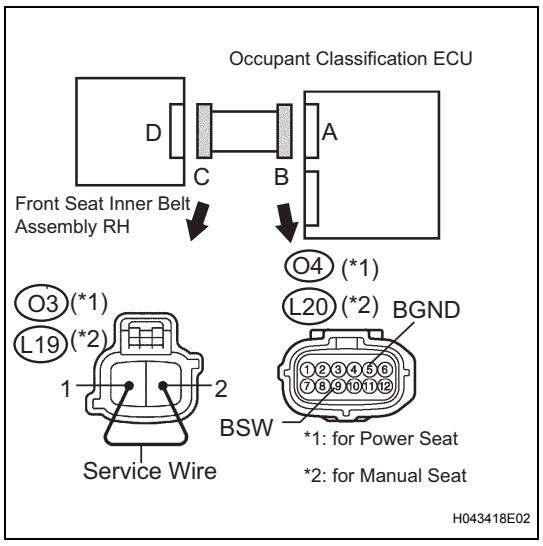

(a) Turn the ignition switch off.
(b) Disconnect the negative (-) terminal cable from the battery.
(c) for Power seat:
Using a service wire, connect O3-2 and O3-1 of connector "C".
(d) for Manual seat:
Using a service wire, connect L19-2 and L19-1 of connector "C".

NOTICE:
Do not forcibly insert a service wire into the terminals of the connector when connecting.

(e) Measure the resistance according to the value(s) in the table below.

Resistance

Tester connection	Condition	Specified condition
O4-9 (BSW) - O4-5 (BGND) (*1)	Always	Below 1 Ω
L20-9 (BSW) - L20-5 (BGND) (*2)	Always	Below 1 Ω

RS

*1: for Power seat
*2: for Manual seat

NG → REPAIR OR REPLACE FLOOR WIRE NO.2 (W/O POWER SEAT)

NG → REPAIR OR REPLACE FRONT SEAT WIRE RH (W/ POWER SEAT)

OK

5 CHECK WIRE HARNESS (SHORT)

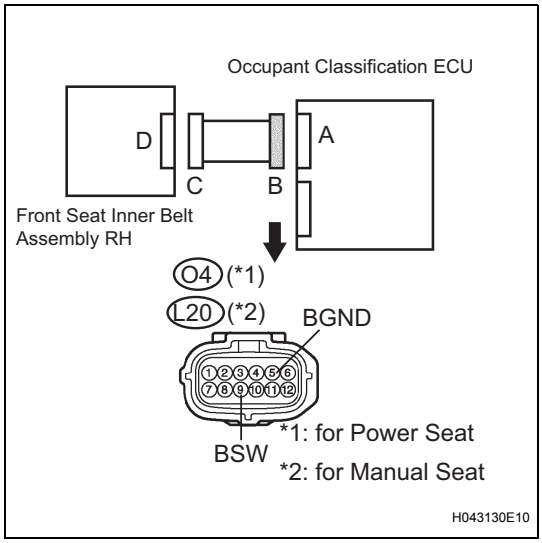

(a) Disconnect the service wire from connector "C".
(b) Measure the resistance according to the value(s) in the table below.

Resistance

Tester connection	Condition	Specified condition
O4-9 (BSW) - O4-5 (BGND) (*1)	Always	1 MΩ or Higher
L20-9 (BSW) - L20-5 (BGND) (*2)	Always	1 MΩ or Higher

*1: for Power seat
*2: for Manual seat

NG → REPAIR OR REPLACE FLOOR WIRE NO.2 (W/O POWER SEAT)

NG → REPAIR OR REPLACE FRONT SEAT WIRE RH (W/ POWER SEAT)

OK

6 CHECK WIRE HARNESS (SHORT TO GROUND)

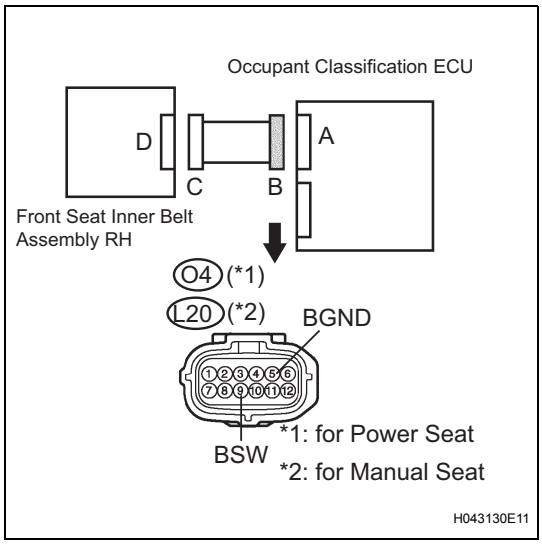

(a) Measure the resistance according to the value(s) in the table below.

Resistance

Tester connection	Condition	Specified condition
O4-9 (BSW) - Body ground (*1)	Always	1 MΩ or Higher
O4-5 (BGND) - Body ground (*1)	Always	1 MΩ or Higher
L20-9 (BSW) - Body ground (*2)	Always	1 MΩ or Higher
L20-5 (BGND) - Body ground (*2)	Always	1 MΩ or Higher

*1: for Power seat
*2: for Manual seat

NG → REPAIR OR REPLACE FLOOR WIRE NO.2 (W/O POWER SEAT)

RS

NG → **REPAIR OR REPLACE FRONT SEAT WIRE RH (W/ POWER SEAT)**

OK

7	CHECK DTC

(a) Connect the connectors to the occupant classification ECU and the front seat inner belt assembly RH.
(b) Connect the negative (-) terminal cable to the battery.
(c) Turn the ignition switch on (IG).
(d) Clear the DTCs stored in the center airbag sensor assembly (See page RS-34).
(e) Clear the DTCs stored in the occupant classification ECU (See page RS-215).
(f) Turn the ignition switch off.
(g) Turn the ignition switch on (IG).
(h) Check the DTCs (See page RS-215).
OK:
DTC B1771 is not output.
HINT:
Codes other than DTC B1771 may be output at this time, but they are not related to this check.

OK → **USE SIMULATION METHOD TO CHECK**

NG

8	REPLACE FRONT SEAT INNER BELT ASSEMBLY RH

(a) Turn the ignition switch off.
(b) Disconnect the negative (-) terminal cable from the battery.
(c) Replace the front seat inner belt assembly RH (See page SB-7).
HINT:
Perform the inspection using parts from a normal vehicle if possible.
(d) Connect the negative (-) terminal cable to the battery.
(e) Turn the ignition switch on (IG).
(f) Clear the DTCs stored in the center airbag sensor assembly (See page RS-34).
(g) Clear the DTCs stored in the occupant classification ECU (See page RS-215).
(h) Turn the ignition switch off.
(i) Turn the ignition switch on (IG).
(j) Check the DTCs (See page RS-215).
OK:
DTC B1771 is not output.
HINT:
Codes other than DTC B1771 may be output at this time, but they are not related to this check.

OK → END

NG

9	REPLACE OCCUPANT CLASSIFICATION ECU

(a) Turn the ignition switch off.
(b) Disconnect the negative (-) terminal cable from the battery.
(c) Replace the occupant classification ECU (See page RS-371).

NEXT

10	PERFORM ZERO POINT CALIBRATION

(a) Connect the negative (-) terminal cable to the battery.
(b) Connect the intelligent tester to the DLC3.
(c) Turn the ignition switch on (IG).
(d) Using the intelligent tester, perform "Zero point calibration" (See page RS-206).
OK:
The "COMPLETED" is displayed.

NEXT

11	PERFORM SENSITIVITY CHECK

(a) Using the intelligent tester, perform "Sensitivity check" (See page RS-206).
Standard value:
27 to 33 kg (59.52 to 72.75 lb)

NEXT

END

DTC	B1780	Front Occupant Classification Sensor LH Circuit Malfunction

DESCRIPTION

The front occupant classification sensor LH circuit consists of the occupant classification ECU and the front occupant classification sensor LH.
DTC B1780 is recorded when a malfunction is detected in the front occupant classification sensor LH circuit.

DTC No.	DTC Detecting Condition	Trouble Area
B1780	• The occupant classification ECU receives a line short circuit signal, an open circuit signal, a short circuit to ground signal or a short circuit to B+ signal in the front occupant classification sensor LH circuit for 2 seconds. • Front occupant classification sensor LH malfunction • Occupant classification ECU malfunction	• Front seat assembly RH (Front occupant classification sensor LH) • Front seat wire RH • Occupant classification ECU

WIRING DIAGRAM

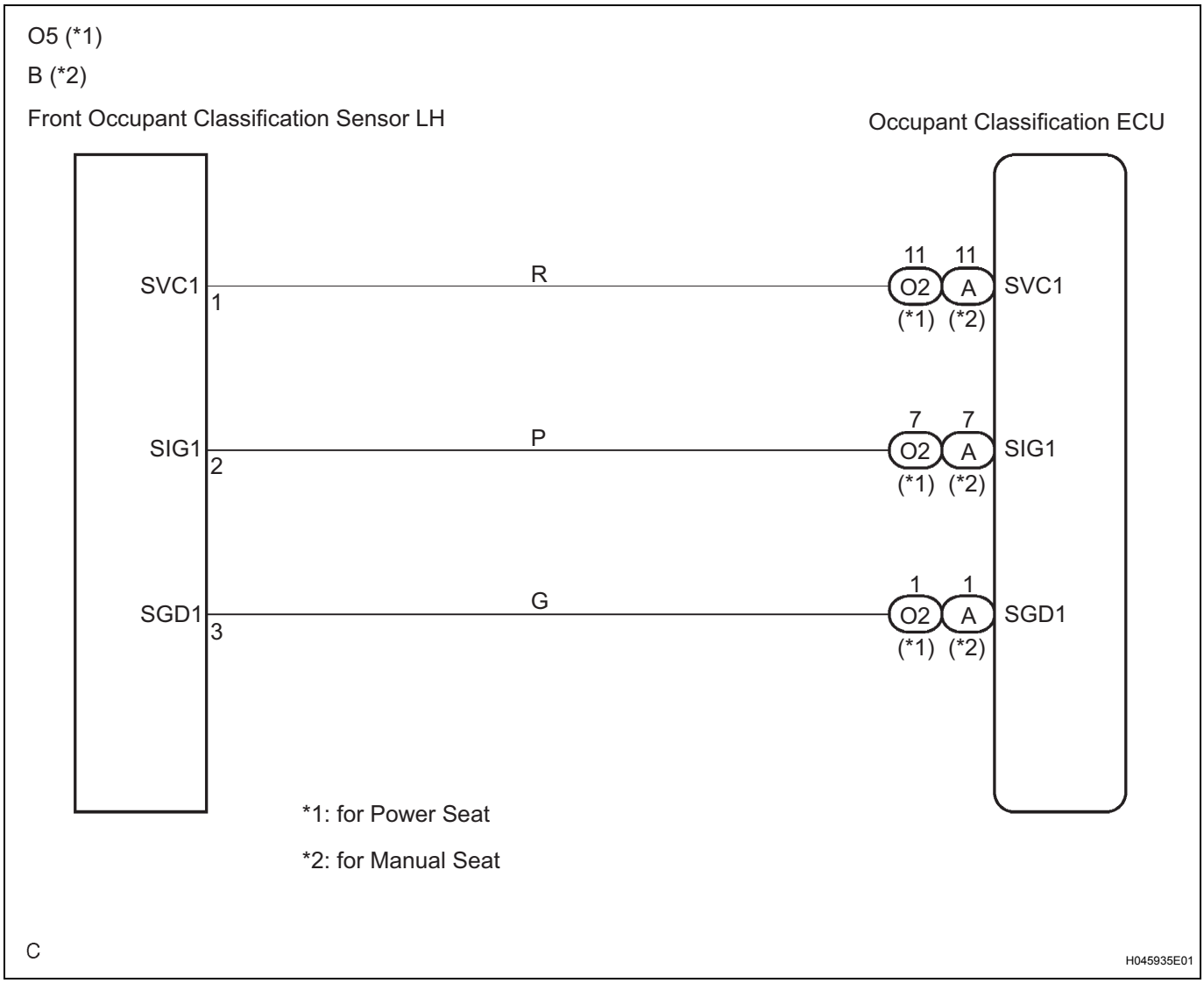

RS

INSPECTION PROCEDURE

HINT:

- If troubleshooting (wire harness inspection) is difficult to perform, remove the front passenger seat installation bolts to see the under surface of seat cushion.
- In the above case, hold the seat so that it does not fall down. Holding the seat for a long period of time may cause a problem, such as seat rail deformation. Hold the seat only as necessary.

1	CHECK DTC

(a) Turn the ignition switch on (IG).
(b) Clear the DTCs stored in the center airbag sensor assembly (See page RS-34).
(c) Clear the DTCs stored in the occupant classification ECU (See page RS-215).
(d) Turn the ignition switch off.
(e) Turn the ignition switch on (IG).
(f) Check the DTCs (See page RS-215).

OK:

DTC B1780 is not output.

HINT:

Codes other than DTC B1780 may be output at this time, but they are not related to this check.

OK → **USE SIMULATION METHOD TO CHECK**

NG

2	CHECK CONNECTION OF CONNECTORS

(a) Turn the ignition switch off.
(b) Disconnect the negative (-) terminal cable from the battery.
(c) Check that the connectors are properly connected to the occupant classification ECU and the front occupant classification sensor LH.

OK:

The connectors are connected.

NG → **CONNECT CONNECTORS, THEN GO TO STEP 1**

OK

3 CHECK FRONT SEAT WIRE RH (SHORT TO B+)

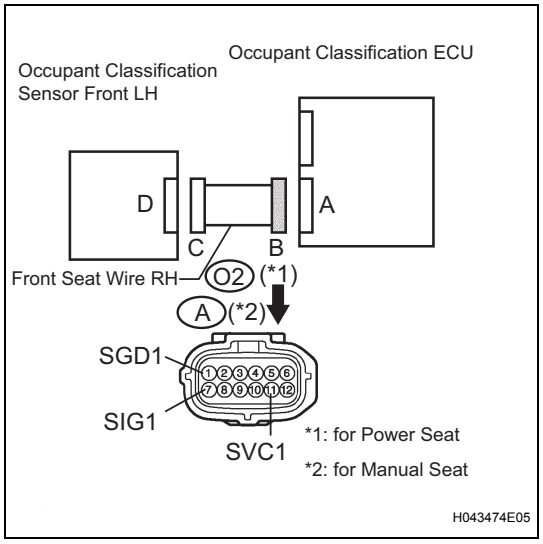

(a) Disconnect the connectors from the occupant classification ECU and the front occupant classification sensor LH.
(b) Connect the negative (-) terminal cable to the battery.
(c) Turn the ignition switch on (IG).
(d) Measure the voltage according to the value(s) in the table below.

Voltage

Tester connection	Condition	Specified condition
O2-1 (SGD1) - Body ground (*1)	Ignition switch on (IG)	Below 1 V
O2-7 (SIG1) - Body ground (*1)	Ignition switch on (IG)	Below 1 V
O2-11 (SVC1) - Body ground (*1)	Ignition switch on (IG)	Below 1 V
A-1 (SGD1) - Body ground (*2)	Ignition switch on (IG)	Below 1 V
A-7 (SIG1) - Body ground (*2)	Ignition switch on (IG)	Below 1 V
A-11 (SVC1) - Body ground (*2)	Ignition switch on (IG)	Below 1 V

*1: for Power seat
*2: for Manual seat

NG → **REPAIR OR REPLACE FRONT SEAT WIRE RH**

OK

4 CHECK FRONT SEAT WIRE RH (OPEN)

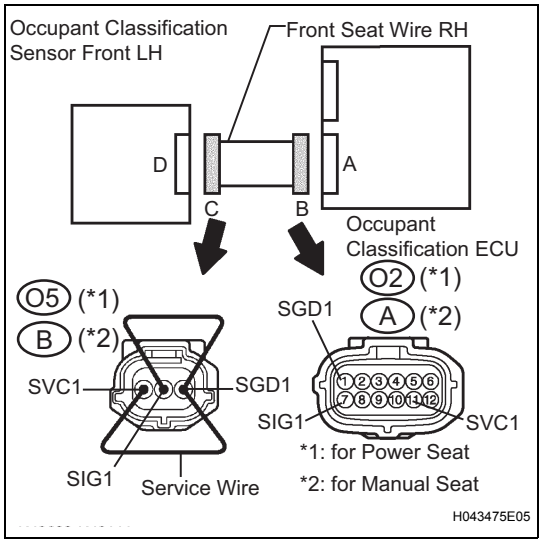

(a) Turn the ignition switch off.
(b) Disconnect the negative (-) terminal cable from the battery.
(c) for Power seat:
Using a service wire, connect O5-1 (SVC1) and O5-3 (SGD1), and connect O5-2 (SIG1) and O5-3 (SGD1) of connector "C".
(d) for Manual seat:
Using a service wire, connect B-1 (SVC1) and B-3 (SGD1), and connect B-2 (SIG1) and B-3 (SGD1) of connector "C".

NOTICE:
Do not forcibly insert a service wire into the terminals of the connector when connecting.

(e) Measure the resistance according to the value(s) in the table below.

RS

Resistance

Tester connection	Condition	Specified condition
O2-7 (SIG1) - O2-1 (SGD1) (*1)	Always	Below 1 Ω
O2-11 (SVC1) - O2-1 (SGD1) (*1)	Always	Below 1 Ω
A-7 (SIG1) - A-1 (SGD1) (*2)	Always	Below 1 Ω
A-11 (SVC1) - A-1 (SGD1) (*2)	Always	Below 1 Ω

*1: for Power seat
*2: for Manual seat

NG → **REPAIR OR REPLACE FRONT SEAT WIRE RH**

OK

5 CHECK FRONT SEAT WIRE RH (SHORT)

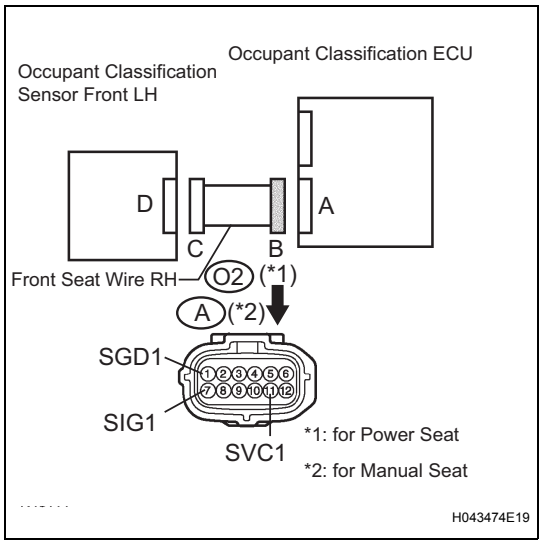

(a) Disconnect the service wire from connector "C".
(b) Measure the resistance according to the value(s) in the table below.

Resistance

Tester connection	Condition	Specified condition
O2-7 (SIG1) - O2-1 (SGD1) (*1)	Always	1 MΩ or Higher
O2-11 (SVC1) - O2-1 (SGD1) (*1)	Always	1 MΩ or Higher
O2-7 (SIG1) - O2-11 (SVC1) (*1)	Always	1 MΩ or Higher
A-7 (SIG1) - A-1 (SGD1) (*2)	Always	1 MΩ or Higher
A-11 (SVC1) - A-1 (SGD1) (*2)	Always	1 MΩ or Higher
A-7 (SIG1) - A-11 (SVC1) (*2)	Always	1 MΩ or Higher

*1: for Power seat
*2: for Manual seat

NG → **REPAIR OR REPLACE FRONT SEAT WIRE RH**

OK

6	CHECK FRONT SEAT WIRE RH (SHORT TO GROUND)

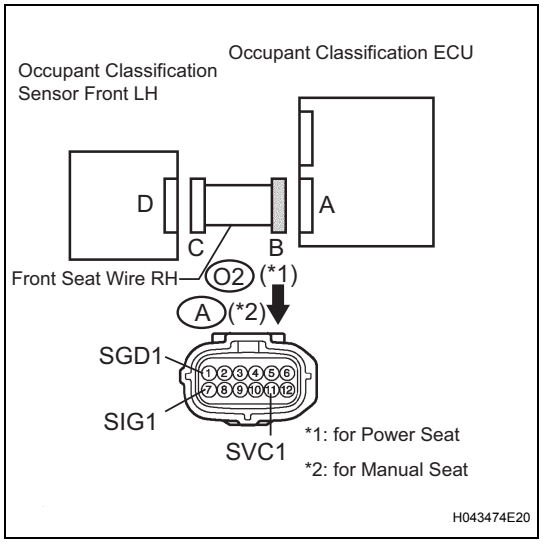

(a) Measure the resistance according to the value(s) in the table below.

Resistance

Tester connection	Condition	Specified condition
O2-1 (SGD1) - Body ground (*1)	Always	1 MΩ or Higher
O2-7 (SIG1) - Body ground (*1)	Always	1 MΩ or Higher
O2-11 (SVC1) - Body ground (*1)	Always	1 MΩ or Higher
A-1 (SGD1) - Body ground (*2)	Always	1 MΩ or Higher
A-7 (SIG1) - Body ground (*2)	Always	1 MΩ or Higher
A-11 (SVC1) - Body ground (*2)	Always	1 MΩ or Higher

*1: for Power seat
*2: for Manual seat

NG → **REPAIR OR REPLACE FRONT SEAT WIRE RH**

OK

7	CHECK DTC

(a) Connect the connectors to the occupant classification ECU and the front occupant classification sensor LH.
(b) Connect the negative (-) terminal cable to the battery.
(c) Turn the ignition switch on (IG).
(d) Clear the DTCs stored in the center airbag sensor assembly (See page RS-34).
(e) Clear the DTCs stored in the occupant classification ECU (See page RS-215).
(f) Turn the ignition switch off.
(g) Turn the ignition switch on (IG).
(h) Check the DTCs (See page RS-215).

OK:

DTC B1780 is not output.

HINT:
Codes other than DTC B1780 may be output at this time, but they are not related to this check.

OK → **USE SIMULATION METHOD TO CHECK**

NG

8	REPLACE OCCUPANT CLASSIFICATION ECU

(a) Turn the ignition switch off.

RS

(b) Disconnect the negative (-) terminal cable from the battery.
(c) Replace the occupant classification ECU (See page RS-371).
HINT:
Perform the inspection using parts from a normal vehicle if possible.

NEXT

9	PERFORM ZERO POINT CALIBRATION

(a) Connect the negative (-) terminal cable to the battery.
(b) Connect the intelligent tester to the DLC3.
(c) Turn the ignition switch on (IG).
(d) Using the intelligent tester, perform "Zero point calibration" (See page RS-206).
OK:
The "COMPLETED" is displayed.

NG → **Go to step 12**

OK

10	PERFORM SENSITIVITY CHECK

(a) Using the intelligent tester, perform "Sensitivity check" (See page RS-206).
Standard value:
27 to 33 kg (59.52 to 72.75 lb)

NG → **Go to step 12**

OK

11	CHECK DTC

(a) Turn the ignition switch on (IG).
(b) Clear the DTCs stored in the center airbag sensor assembly (See page RS-34).
(c) Clear the DTCs stored in the occupant classification ECU (See page RS-215).
(d) Turn the ignition switch off.
(e) Turn the ignition switch on (IG).
(f) Check the DTCs (See page RS-215).
OK:
DTC B1780 is not output.
HINT:
Codes other than DTC B1780 may be output at this time, but they are not related to this check.

OK → **END**

NG

12	REPLACE FRONT SEAT ASSEMBLY RH

(a) Turn the ignition switch off.
(b) Disconnect the negative (-) terminal cable from the battery.
(c) Replace the front seat assembly RH (See page SE-50 for power seat or SE-40 for manual seat).

NEXT

13	PERFORM ZERO POINT CALIBRATION

(a) Connect the negative (-) terminal cable to the battery.
(b) Connect the intelligent tester to the DLC3.
(c) Turn the ignition switch on (IG).
(d) Using the intelligent tester, perform "Zero point calibration" (See page RS-206).
OK:
The "COMPLETED" is display.

NEXT

14	PERFORM SENSITIVITY CHECK

(a) Using the intelligent tester, perform "Sensitivity check" (See page RS-206).
Standard value:
27 to 33 kg (59.52 to 72.75 lb)

NEXT

END

DTC	B1781	Front Occupant Classification Sensor RH Circuit Malfunction

DESCRIPTION

The front occupant classification sensor RH circuit consists of the occupant classification ECU and the front occupant classification sensor RH.
DTC B1781 is recorded when a malfunction is detected in the front occupant classification sensor RH circuit.

DTC No.	DTC Detecting Condition	Trouble Area
B1781	• The occupant classification ECU receives a line short circuit signal, an open circuit signal, a short circuit to ground signal or a short circuit to B+ signal in the front occupant classification sensor RH circuit for 2 seconds. • Front occupant classification sensor RH malfunction • Occupant classification ECU malfunction	• Front seat assembly RH (Front occupant classification sensor RH) • Front seat wire RH • Occupant classification ECU

WIRING DIAGRAM

O7 (*1)

C (*2)

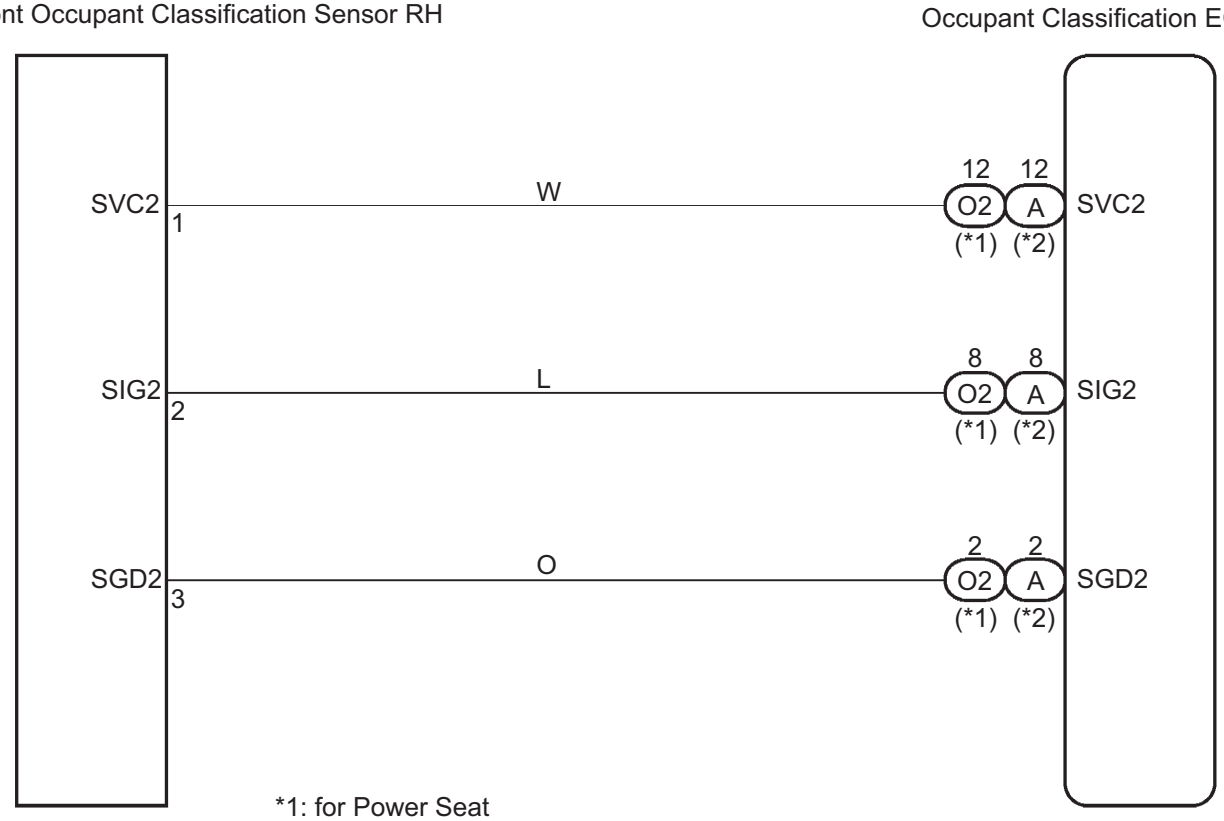

RS

C

H045935E04

INSPECTION PROCEDURE

HINT:

- If troubleshooting (wire harness inspection) is difficult to perform, remove the front passenger seat installation bolts to see the under surface of seat cushion.
- In the above case, hold the seat so that it does not fall down. Holding the seat for a long period of time may cause a problem, such as seat rail deformation. Hold the seat only as necessary.

1	CHECK DTC

(a) Turn the ignition switch on (IG).
(b) Clear the DTCs stored in the center airbag sensor assembly (See page RS-34).
(c) Clear the DTCs stored in the occupant classification ECU (See page RS-215).
(d) Turn the ignition switch off.
(e) Turn the ignition switch on (IG).
(f) Check the DTCs (See page RS-215).

OK:

DTC B1781 is not output.

HINT:

Codes other than DTC B1781 may be output at this time, but they are not related to this check.

OK → **USE SIMULATION METHOD TO CHECK**

NG

2	CHECK CONNECTION OF CONNECTORS

(a) Turn the ignition switch off.
(b) Disconnect the negative (-) terminal cable from the battery.
(c) Check that the connectors are properly connected to the occupant classification ECU and the front occupant classification sensor RH.

OK:

The connectors are connected.

NG → **CONNECT CONNECTORS, THEN GO TO STEP 1**

OK

3 CHECK FRONT SEAT WIRE RH (SHORT TO B+)

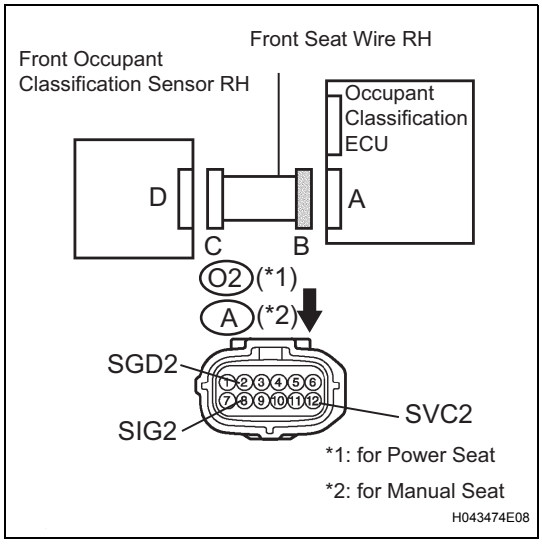

(a) Disconnect the connectors from the occupant classification ECU and the front occupant classification sensor RH.
(b) Connect the negative (-) terminal cable to the battery.
(c) Turn the ignition switch on (IG).
(d) Measure the voltage according to the value(s) in the table below.

Voltage

Tester connection	Condition	Specified condition
O2-2 (SGD2) - Body ground (*1)	Ignition switch on (IG)	Below 1 V
O2-8 (SIG2) - Body ground (*1)	Ignition switch on (IG)	Below 1 V
O2-12 (SVC2) - Body ground (*1)	Ignition switch on (IG)	Below 1 V
A-2 (SGD2) - Body ground (*2)	Ignition switch on (IG)	Below 1 V
A-8 (SIG2) - Body ground (*2)	Ignition switch on (IG)	Below 1 V
A-12 (SVC2) - Body ground (*2)	Ignition switch on (IG)	Below 1 V

*1: for Power seat
*2: for Manual seat

NG → **REPAIR OR REPLACE FRONT SEAT WIRE RH**

OK

4 CHECK FRONT SEAT WIRE RH (OPEN)

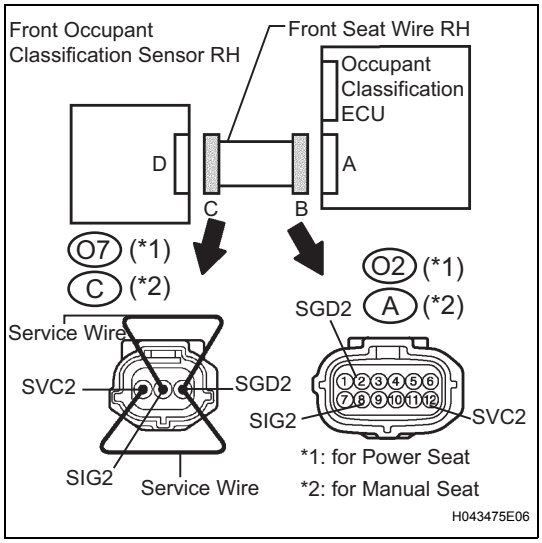

(a) Turn the ignition switch off.
(b) Disconnect the negative (-) terminal cable from the battery.
(c) for Power seat:
Using a service wire, connect O7-1 (SVC2) and O7-3 (SGD2), and connect O7-2 (SIG2) and O7-3 (SGD2) of connector "C".
(d) for Manual seat:
Using a service wire, connect C-1 (SVC2) and C-3 (SGD2), and connect C-2 (SIG2) and C-3 (SGD2) of connector "C".
NOTICE:
Do not forcibly insert a service wire into the terminals of the connector when connecting.
(e) Measure the resistance according to the value(s) in the table below.

RS

Resistance

Tester connection	Condition	Specified condition
O2-8 (SIG2) - O2-2 (SGD2) (*1)	Always	Below 1 Ω
O2-12 (SVC2) - O2-2 (SGD2) (*1)	Always	Below 1 Ω
A-8 (SIG2) - A-2 (SGD2) (*2)	Always	Below 1 Ω
A-12 (SVC2) - A-2 (SGD2) (*2)	Always	Below 1 Ω

*1: for Power seat
*2: for Manual seat

NG → **REPAIR OR REPLACE FRONT SEAT WIRE RH**

OK

5 CHECK FRONT SEAT WIRE RH (SHORT)

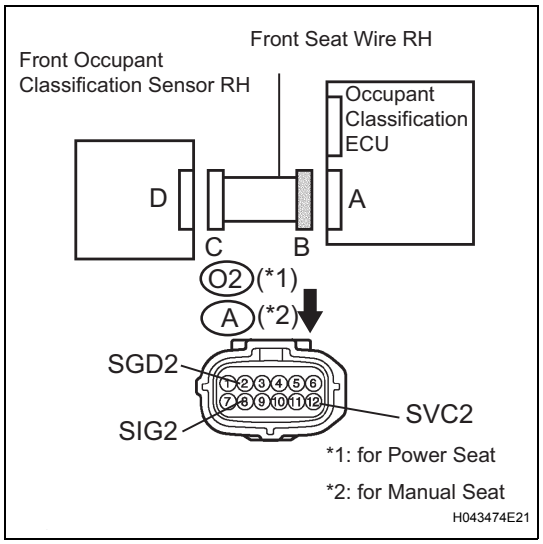

(a) Disconnect the service wire from connector "C".
(b) Measure the resistance according to the value(s) in the table below.

Resistance

Tester connection	Condition	Specified condition
O2-8 (SIG2) - O2-2 (SGD2) (*1)	Always	1 MΩ or Higher
O2-12 (SVC2) - O2-2 (SGD2) (*1)	Always	1 MΩ or Higher
O2-8 (SIG2) - O2-12 (SVC2) (*1)	Always	1 MΩ or Higher
A-8 (SIG2) - A-2 (SGD2) (*2)	Always	1 MΩ or Higher
A-12 (SVC2) - A-2 (SGD2) (*2)	Always	1 MΩ or Higher
A-8 (SIG2) - A-12 (SVC2) (*2)	Always	1 MΩ or Higher

*1: for Power seat
*2: for Manual seat

NG → **REPAIR OR REPLACE FRONT SEAT WIRE RH**

OK

6 CHECK FRONT SEAT WIRE RH (SHORT TO GROUND)

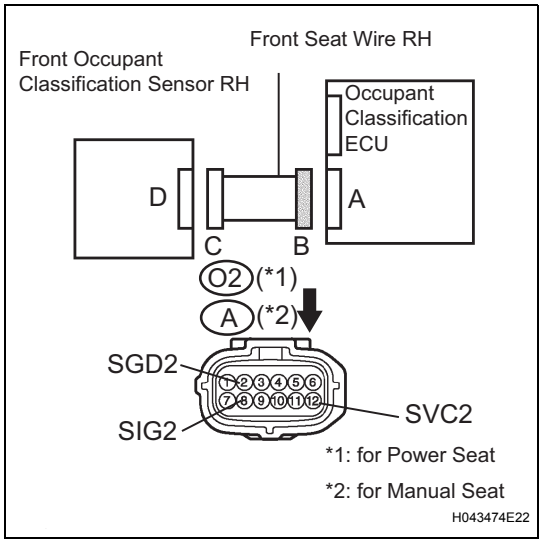

(a) Measure the resistance according to the value(s) in the table below.

Resistance

Tester connection	Condition	Specified condition
O2-2 (SGD2) - Body ground (*1)	Always	1 MΩ or Higher
O2-8 (SIG2) - Body ground (*1)	Always	1 MΩ or Higher
O2-12 (SVC2) - Body ground (*1)	Always	1 MΩ or Higher
A-2 (SGD2) - Body ground (*2)	Always	1 MΩ or Higher
A-8 (SIG2) - Body ground (*2)	Always	1 MΩ or Higher
A-12 (SVC2) - Body ground (*2)	Always	1 MΩ or Higher

*1: for Power seat
*2: for Manual seat

NG → **REPAIR OR REPLACE FRONT SEAT WIRE RH**

OK

7 CHECK DTC

(a) Connect the connectors to the occupant classification ECU and the front occupant classification sensor RH.
(b) Connect the negative (-) terminal cable to the battery.
(c) Turn the ignition switch on (IG).
(d) Clear the DTCs stored in the center airbag sensor assembly (See page RS-34).
(e) Clear the DTCs stored in the occupant classification ECU (See page RS-215).
(f) Turn the ignition switch off.
(g) Turn the ignition switch on (IG).
(h) Check the DTCs (See page RS-215).

OK:

DTC B1781 is not output.

HINT:
Codes other than DTC B1781 may be output at this time, but they are not related to this check.

OK → **USE SIMULATION METHOD TO CHECK**

NG

8 REPLACE OCCUPANT CLASSIFICATION ECU

(a) Turn the ignition switch off.

(b) Disconnect the negative (-) terminal cable from the battery.
(c) Replace the occupant classification ECU (See page RS-371).
HINT:
Perform the inspection using parts from a normal vehicle if possible.

NEXT

9	PERFORM ZERO POINT CALIBRATION

(a) Connect the negative (-) terminal cable to the battery.
(b) Connect the intelligent tester to the DLC3.
(c) Turn the ignition switch on (IG).
(d) Using the intelligent tester, perform "Zero point calibration" (See page RS-206).
OK:
The "COMPLETED" is displayed.

NG → **Go to step 12**

OK

10	PERFORM SENSITIVITY CHECK

(a) Using the intelligent tester, perform "Sensitivity check" (See page RS-206).
Standard value:
27 to 33 kg (59.52 to 72.75 lb)

NG → **Go to step 12**

OK

11	CHECK DTC

(a) Turn the ignition switch on (IG).
(b) Clear the DTCs stored in the center airbag sensor assembly (See page RS-34).
(c) Clear the DTCs stored in the occupant classification ECU (See page RS-215).
(d) Turn the ignition switch off.
(e) Turn the ignition switch on (IG).
(f) Check the DTCs (See page RS-215).
OK:
DTC B1781 is not output.
HINT:
Codes other than DTC B1781 may be output at this time, but they are not related to this check.

OK → **END**

NG

12	REPLACE FRONT SEAT ASSEMBLY RH

(a) Turn the ignition switch off.
(b) Disconnect the negative (-) terminal cable from the battery.
(c) Replace the front seat assembly RH (See page SE-50 for power seat or SE-40 for manual seat).

NEXT

13	PERFORM ZERO POINT CALIBRATION

(a) Connect the negative (-) terminal cable to the battery.
(b) Connect the intelligent tester to the DLC3.
(c) Turn the ignition switch on (IG).
(d) Using the intelligent tester, perform "Zero point calibration" (See page RS-206).
OK:
The "COMPLETED" is displayed.

NEXT

14	PERFORM SENSITIVITY CHECK

(a) Using the intelligent tester, perform "Sensitivity check" (See page RS-206).
Standard value:
27 to 33 kg (59.52 to 72.75 lb)

NEXT

END

DTC	B1782	Rear Occupant Classification Sensor LH Circuit Malfunction

DESCRIPTION

The rear occupant classification sensor LH circuit consists of the occupant classification ECU and the rear occupant classification sensor LH.
DTC B1782 is recorded when a malfunction is detected in the rear occupant classification sensor LH circuit.

DTC No.	DTC Detecting Condition	Trouble Area
B1782	• The occupant classification ECU receives a line short circuit signal, an open circuit signal, a short circuit to ground signal or a short circuit to B+ signal in the rear occupant classification sensor LH circuit for 2 seconds. • Rear occupant classification sensor LH malfunction • Occupant classification ECU malfunction	• Front seat assembly RH (Rear occupant classification sensor LH) • Front seat wire RH • Occupant classification ECU

WIRING DIAGRAM

O6 (*1)

D (*2)

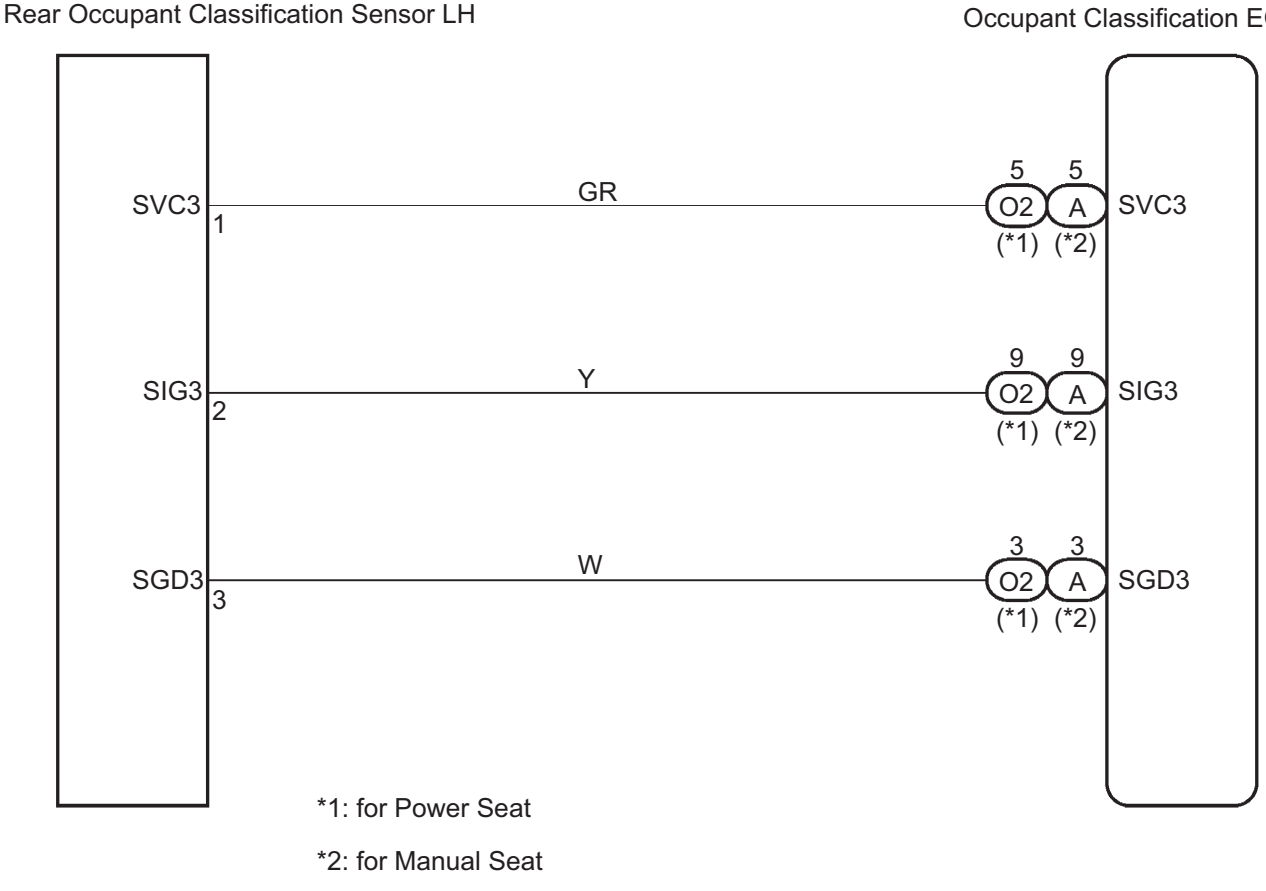

C

H045935E05

RS

INSPECTION PROCEDURE

HINT:

- If troubleshooting (wire harness inspection) is difficult to perform, remove the front passenger seat installation bolts to see the under surface of seat cushion.
- In the above case, hold the seat so that it does not fall down. Holding the seat for a long period of time may cause a problem, such as seat rail deformation. Hold the seat only as necessary.

1	CHECK DTC

(a) Turn the ignition switch on (IG).
(b) Clear the DTCs stored in the center airbag sensor assembly (See page RS-34).
(c) Clear the DTCs stored in the occupant classification ECU (See page RS-215).
(d) Turn the ignition switch off.
(e) Turn the ignition switch on (IG).
(f) Check the DTCs (See page RS-215).

OK:

DTC B1782 is not output.

HINT:

Codes other than DTC B1782 may be output at this time, but they are not related to this check.

OK → **USE SIMULATION METHOD TO CHECK**

NG

2	CHECK CONNECTION OF CONNECTORS

(a) Turn the ignition switch off.
(b) Disconnect the negative (-) terminal cable from the battery.
(c) Check that the connectors are properly connected to the occupant classification ECU and the rear occupant classification sensor LH.

OK:

The connectors are connected.

NG → **CONNECT CONNECTORS, THEN GO TO STEP 1**

OK

3 CHECK FRONT SEAT WIRE RH (SHORT TO B+)

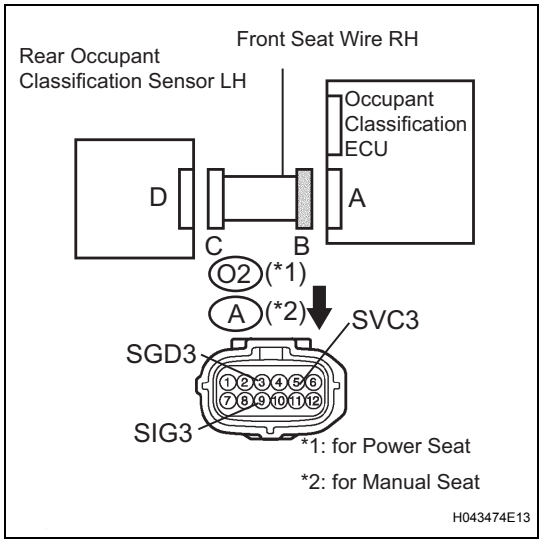

(a) Disconnect the connectors from the occupant classification ECU and the rear occupant classification sensor LH.
(b) Connect the negative (-) terminal cable to the battery.
(c) Turn the ignition switch on (IG).
(d) Measure the voltage according to the value(s) in the table below.

Voltage

Tester connection	Condition	Specified condition
O2-3 (SGD3) - Body ground (*1)	Ignition switch on (IG)	Below 1 V
O2-5 (SVC3) - Body ground (*1)	Ignition switch on (IG)	Below 1 V
O2-9 (SIG3) - Body ground (*1)	Ignition switch on (IG)	Below 1 V
A-3 (SGD3) - Body ground (*2)	Ignition switch on (IG)	Below 1 V
A-9 (SIG3) - Body ground (*2)	Ignition switch on (IG)	Below 1 V
A-5 (SVC3) - Body ground (*2)	Ignition switch on (IG)	Below 1 V

*1: for Power seat
*2: for Manual seat

NG → **REPAIR OR REPLACE FRONT SEAT WIRE RH**

OK

4 CHECK FRONT SEAT WIRE RH (OPEN)

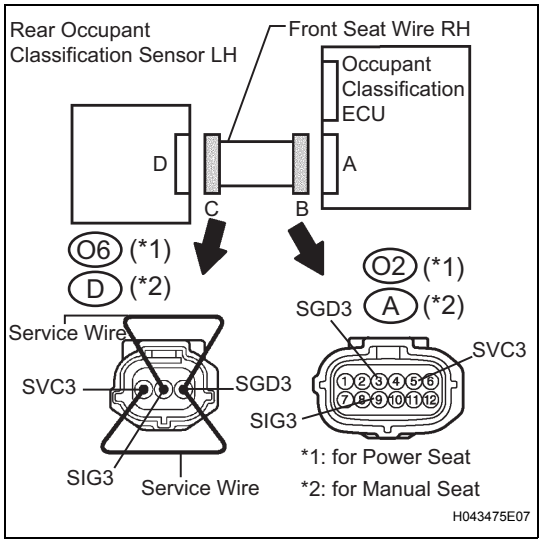

(a) Turn the ignition switch to the LOCK position.
(b) Disconnect the negative (-) terminal cable from the battery.
(c) for Power seat:
Using a service wire, connect O6-1 (SVC3) and O6-3 (SGD3), and connect O6-2 (SIG3) and O6-3 (SGD3) of connector "C".
(d) for Manual seat:
Using a service wire, connect D-1 (SVC3) and D-3 (SGD3), and connect D-2 (SIG3) and D-3 (SGD3) of connector "C".

NOTICE:
Do not forcibly insert a service wire into the terminals of the connector when connecting.

(e) Measure the resistance according to the value(s) in the table below.

RS

Resistance

Tester connection	Condition	Specified condition
O2-5 (SVC3) - O2-3 (SGD3) (*1)	Always	Below 1 Ω
O2-9 (SIG3) - O2-3 (SGD3) (*1)	Always	Below 1 Ω
A-9 (SIG3) - A-3 (SGD3) (*2)	Always	Below 1 Ω
A-5 (SVC3) - A-3 (SGD3) (*2)	Always	Below 1 Ω

*1: for Power seat
*2: for Manual seat

NG → **REPAIR OR REPLACE FRONT SEAT WIRE RH**

OK

5 CHECK FRONT SEAT WIRE RH (SHORT)

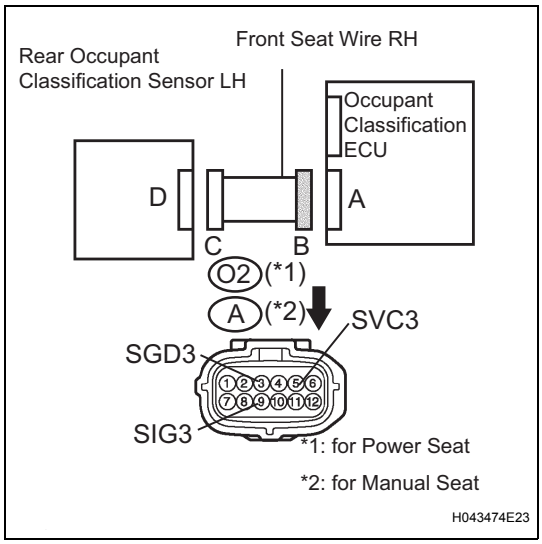

(a) Disconnect the service wire from connector "C".
(b) Measure the resistance according to the value(s) in the table below.

Resistance

Tester connection	Condition	Specified condition
O2-5 (SVC3) - O2-3 (SGD3) (*1)	Always	1 MΩ or Higher
O2-9 (SIG3) - O2-3 (SGD3) (*1)	Always	1 MΩ or Higher
O2-5 (SVC3) - O2-9 (SIG3) (*1)	Always	1 MΩ or Higher
A-9 (SIG3) - A-3 (SGD3) (*2)	Always	1 MΩ or Higher
A-5 (SVC3) - A-3 (SGD3) (*2)	Always	1 MΩ or Higher
A-9 (SIG3) - A-5 (SVC3) (*2)	Always	1 MΩ or Higher

*1: for Power seat
*2: for Manual seat

NG → **REPAIR OR REPLACE FRONT SEAT WIRE RH**

OK

6 CHECK FRONT SEAT WIRE RH (SHORT TO GROUND)

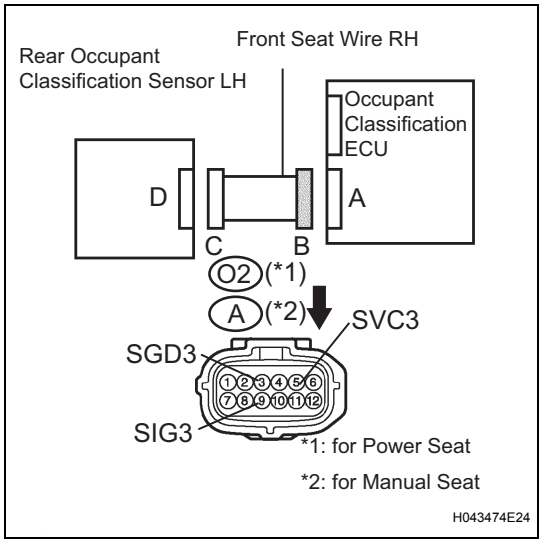

(a) Measure the resistance according to value(s) in the table below.

Resistance

Tester connection	Condition	Specified condition
O2-3 (SGD3) - Body ground (*1)	Always	1 MΩ or Higher
O2-5 (SVC3) - Body ground (*1)	Always	1 MΩ or Higher
O2-9 (SIG3) - Body ground (*1)	Always	1 MΩ or Higher
A-3 (SGD3) - Body ground (*2)	Always	1 MΩ or Higher
A-9 (SIG3) - Body ground (*2)	Always	1 MΩ or Higher
A-5 (SVC3) - Body ground (*2)	Always	1 MΩ or Higher

*1: for Power seat
*2: for Manual seat

NG → **REPAIR OR REPLACE FRONT SEAT WIRE RH**

OK

7 CHECK DTC

(a) Connect the connectors to the occupant classification ECU and the rear occupant classification sensor LH.
(b) Connect the negative (-) terminal cable to the battery.
(c) Turn the ignition switch on (IG).
(d) Clear the DTCs stored in the center airbag sensor assembly (See page RS-34).
(e) Clear the DTCs stored in the occupant classification ECU (See page RS-215).
(f) Turn the ignition switch off.
(g) Turn the ignition switch on (IG).
(h) Check the DTCs (See page RS-215).

OK:

DTC B1782 is not output.

HINT:
Codes other than DTC B1782 may be output at this time, but they are not related to this check.

OK → **USE SIMULATION METHOD TO CHECK**

NG

8 REPLACE OCCUPANT CLASSIFICATION ECU

(a) Turn the ignition switch off.

(b) Disconnect the negative (-) terminal cable from the battery.
(c) Replace the occupant classification ECU (See page RS-371).
HINT:
Perform the inspection using parts from a normal vehicle if possible.

NEXT

9	PERFORM ZERO POINT CALIBRATION

(a) Connect the negative (-) terminal cable to the battery.
(b) Connect the intelligent tester to the DLC3.
(c) Turn the ignition switch on (IG).
(d) Using the intelligent tester, perform "Zero point calibration" (See page RS-206).
OK:
The "COMPLETED" is displayed.

NG → **Go to step 12**

OK

10	PERFORM SENSITIVITY CHECK

(a) Using the intelligent tester, perform "Sensitivity check" (See page RS-206).
Standard value:
27 to 33 kg (59.52 to 72.75 lb)

NG → **Go to step 12**

OK

11	CHECK DTC

(a) Turn the ignition switch on (IG).
(b) Clear the DTCs stored in the center airbag sensor assembly (See page RS-34).
(c) Clear the DTCs stored in the occupant classification ECU (See page RS-215).
(d) Turn the ignition switch off.
(e) Turn the ignition switch on (IG).
(f) Check the DTCs (See page RS-215).
OK:
DTC B1782 is not output.
HINT:
Codes other than DTC B1782 may be output at this time, but they are not related to this check.

OK → **END**

NG

12	REPLACE FRONT SEAT ASSEMBLY RH

(a) Turn the ignition switch off.
(b) Disconnect the negative (-) terminal cable from the battery.
(c) Replace the front seat assembly RH (See page SE-50 for power seat or SE-40 for manual seat).

NEXT

13	PERFORM ZERO POINT CALIBRATION

(a) Connect the negative (-) terminal cable to the battery.
(b) Connect the intelligent tester to the DLC3.
(c) Turn the ignition switch on (IG).
(d) Using the intelligent tester, perform "Zero point calibration" (See page RS-206).
OK:
The "COMPLETED" is displayed.

NEXT

14	PERFORM SENSITIVITY CHECK

(a) Using the intelligent tester, perform "Sensitivity check" (See page RS-206).
Standard value:
27 to 33 kg (59.52 to 72.75 lb)

NEXT

END

15	USE SIMULATION METHOD TO CHECK

	****

DTC	B1783	Rear Occupant Classification Sensor RH Circuit Malfunction

DESCRIPTION

The rear occupant classification sensor RH circuit consists of the occupant classification ECU and the rear occupant classification sensor RH.
DTC B1783 is recorded when a malfunction is detected in the rear occupant classification sensor RH circuit.

DTC No.	DTC Detecting Condition	Trouble Area
B1783	• The occupant classification ECU receives a line short circuit signal, an open circuit signal, a short circuit to ground signal or a short circuit to B+ signal in the rear occupant classification sensor RH circuit for 2 seconds. • Rear occupant classification sensor RH malfunction. • Occupant classification ECU malfunction.	• Front seat assembly RH (Rear occupant classification sensor RH) • Front seat wire RH • Occupant classification ECU

WIRING DIAGRAM

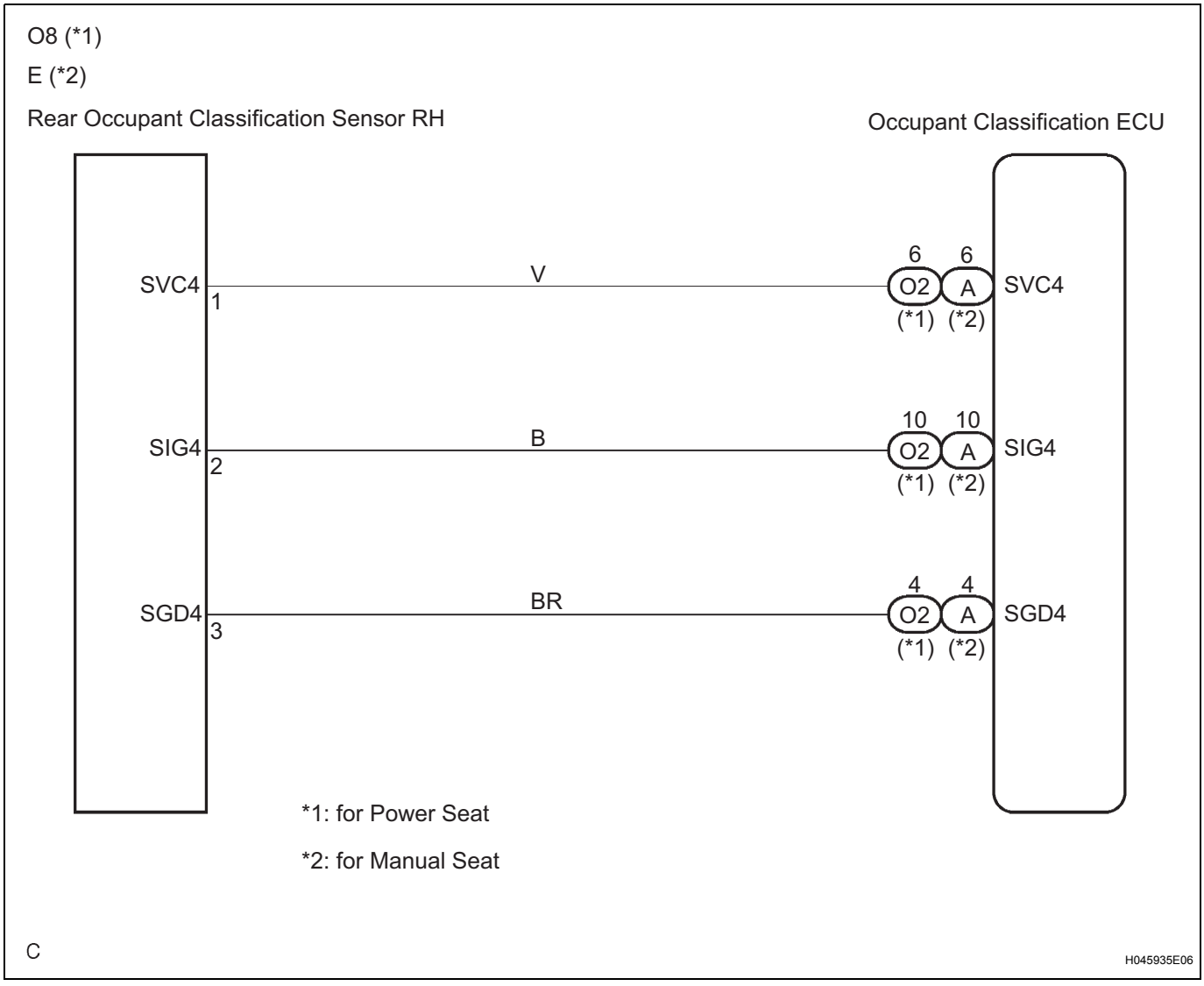

INSPECTION PROCEDURE

HINT:

- If troubleshooting (wire harness inspection) is difficult to perform, remove the front passenger seat installation bolts to see the under surface of seat cushion.
- In the above case, hold the seat so that it does not fall down. Holding the seat for a long period of time may cause a problem, such as seat rail deformation. Hold the seat only as necessary.

1	CHECK DTC

(a) Turn the ignition switch on (IG).
(b) Clear the DTCs stored in the center airbag sensor assembly (See page RS-34).
(c) Clear the DTCs stored in the occupant classification ECU (See page RS-215).
(d) Turn the ignition switch off.
(e) Turn the ignition switch on (IG).
(f) Check the DTCs (See page RS-215).

OK:

DTC B1783 is not output.

HINT:

Codes other than DTC B1783 may be output at this time, but they are not related to this check.

OK → **USE SIMULATION METHOD TO CHECK**

NG

2	CHECK CONNECTION OF CONNECTORS

(a) Turn the ignition switch off.
(b) Disconnect the negative (-) terminal cable from the battery.
(c) Check that the connectors are properly connected to the occupant classification ECU and the rear occupant classification sensor RH.

OK:

The connectors are connected.

NG → **CONNECT CONNECTORS, THEN GO TO STEP 1**

OK

3 CHECK FRONT SEAT WIRE RH (SHORT TO B+)

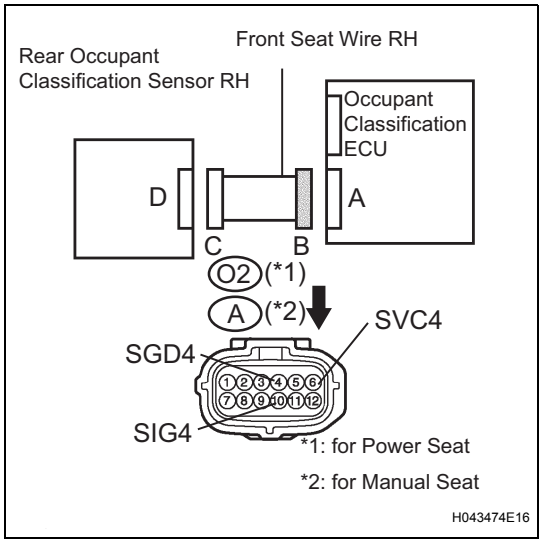

(a) Disconnect the connectors from the occupant classification ECU and the rear occupant classification sensor RH.
(b) Connect the negative (-) terminal cable to the battery.
(c) Turn the ignition switch on (IG).
(d) Measure the voltage according to the value(s) in the table below.

Voltage

Tester connection	Condition	Specified condition
O2-4 (SGD4) - Body ground (*1)	Ignition switch on (IG)	Below 1 V
O2-6 (SVC4) - Body ground (*1)	Ignition switch on (IG)	Below 1 V
O2-10 (SIG4) - Body ground (*1)	Ignition switch on (IG)	Below 1 V
A-4 (SGD4) - Body ground (*2)	Ignition switch on (IG)	Below 1 V
A-10 (SIG4) - Body ground (*2)	Ignition switch on (IG)	Below 1 V
A-6 (SVC4) - Body ground (*2)	Ignition switch on (IG)	Below 1 V

*1: for Power seat
*2: for Manual seat

NG → **REPAIR OR REPLACE FRONT SEAT WIRE RH**

OK

4 CHECK FRONT SEAT WIRE RH (OPEN)

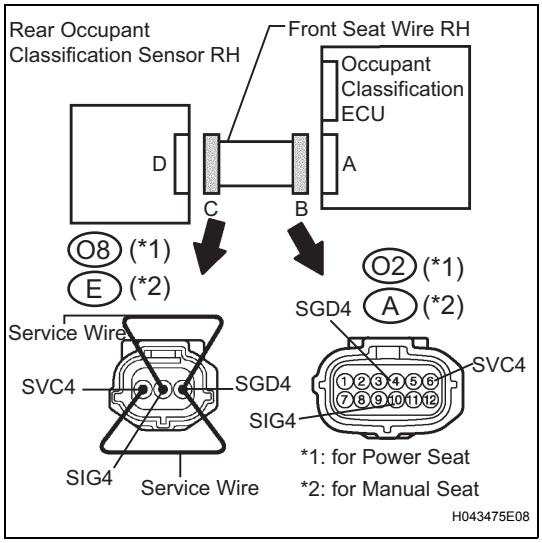

(a) Turn the ignition switch to the LOCK position.
(b) Disconnect the negative (-) terminal cable from the battery.
(c) for Power seat:
Using a service wire, connect O8-1 (SVC4) and O8-3 (SGD4), and connect O8-2 (SIG4) and O8-3 (SGD4) of connector "C".
(d) for Manual seat:
Using a service wire, connect E-1 (SVC4) and E-3 (SGD4), and connect E-2 (SIG4) and E-3 (SGD4) of connector "C".

NOTICE:
Do not forcibly insert a service wire into the terminals of the connector when connecting.

(e) Measure the resistance according to the value(s) in the table below.

Resistance

Tester connection	Condition	Specified condition
O2-6 (SVC4) - O2-4 (SGD4) (*1)	Always	Below 1 Ω
O2-10 (SIG4) - O2-4 (SGD4) (*1)	Always	Below 1 Ω
A-10 (SIG4) - A-4 (SGD4) (*2)	Always	Below 1 Ω
A-6 (SVC4) - A-4 (SGD4) (*2)	Always	Below 1 Ω

*1: for Power seat
*2: for Manual seat

NG → **REPAIR OR REPLACE FRONT SEAT WIRE RH**

OK

5 CHECK FRONT SEAT WIRE RH (SHORT)

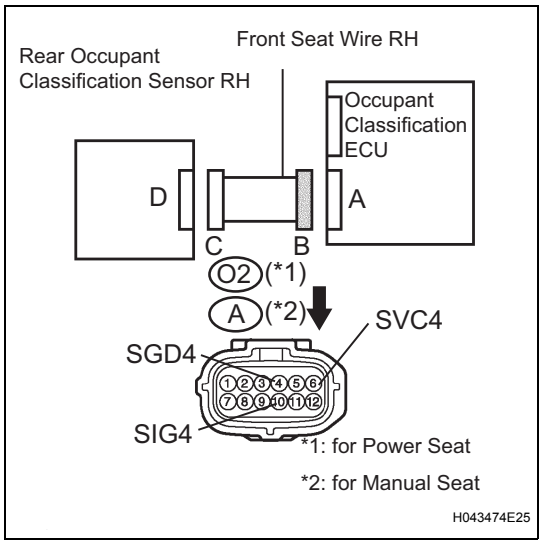

(a) Disconnect the service wire from connector "C".
(b) Measure the resistance according to the value(s) in the table below.

Resistance

Tester connection	Condition	Specified condition
O2-6 (SVC4) - O2-4 (SGD4) (*1)	Always	1 MΩ or Higher
O2-10 (SIG4) - O2-4 (SGD4) (*1)	Always	1 MΩ or Higher
O2-6 (SVC4) - O2-10 (SIG4) (*1)	Always	1 MΩ or Higher
A-10 (SIG4) - A-4 (SGD4) (*2)	Always	1 MΩ or Higher
A-6 (SVC4) - A-4 (SGD4) (*2)	Always	1 MΩ or Higher
A-10 (SIG4) - A-6 (SVC4) (*2)	Always	1 MΩ or Higher

*1: for Power seat
*2: for Manual seat

NG → **REPAIR OR REPLACE FRONT SEAT WIRE RH**

OK

6 CHECK FRONT SEAT WIRE RH (SHORT TO GROUND)

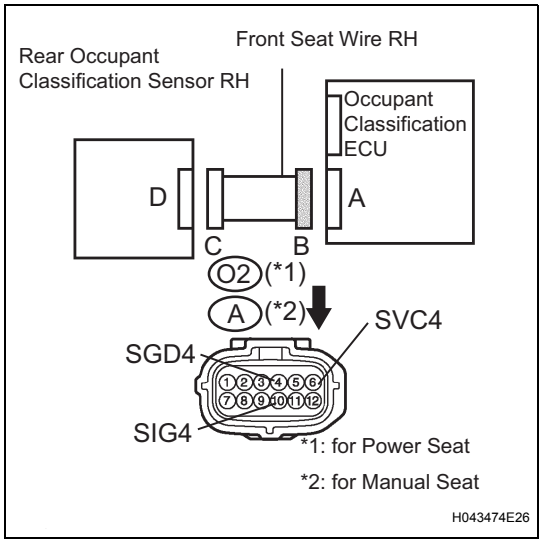

(a) Measure the resistance according to the value(s) in the table below.

Resistance

Tester connection	Condition	Specified condition
O2-4 (SGD4) - Body ground (*1)	Always	1 MΩ or Higher
O2-6 (SVC4) - Body ground (*1)	Always	1 MΩ or Higher
O2-10 (SIG4) - Body ground (*1)	Always	1 MΩ or Higher
A-4 (SGD4) - Body ground (*2)	Always	1 MΩ or Higher
A-10 (SIG4) - Body ground (*2)	Always	1 MΩ or Higher
A-6 (SVC4) - Body ground (*2)	Always	1 MΩ or Higher

*1: for Power seat
*2: for Manual seat

NG → **REPAIR OR REPLACE FRONT SEAT WIRE RH**

OK

7 CHECK DTC

(a) Connect the connectors to the occupant classification ECU and the rear occupant classification sensor RH.
(b) Connect the negative (-) terminal cable to the battery.
(c) Turn the ignition switch on (IG).
(d) Clear the DTCs stored in the center airbag sensor assembly (See page RS-34).
(e) Clear the DTCs stored in the occupant classification ECU (See page RS-215).
(f) Turn the ignition switch off.
(g) Turn the ignition switch on (IG).
(h) Check the DTCs (See page RS-215).

OK:

DTC B1783 is not output.

HINT:

Codes other than DTC B1783 may be output at this time, but they are not related to this check.

OK → **USE SIMULATION METHOD TO CHECK**

NG

8 REPLACE OCCUPANT CLASSIFICATION ECU

(a) Turn the ignition switch off.

(b) Disconnect the negative (-) terminal cable from the battery.
(c) Replace the occupant classification ECU (See page RS-371).
HINT:
Perform the inspection using parts from a normal vehicle if possible.

NEXT

9	PERFORM ZERO POINT CALIBRATION

(a) Connect the negative (-) terminal cable to the battery.
(b) Connect the intelligent tester to the DLC3.
(c) Turn the ignition switch on (IG).
(d) Using the intelligent tester, perform "Zero point calibration" (See page RS-206).
OK:
The "COMPLETED" is displayed.

NG → **Go to step 12**

OK

10	PERFORM SENSITIVITY CHECK

(a) Using the intelligent tester, perform "Sensitivity check" (See page RS-206).
Standard value:
27 to 33 kg (59.52 to 72.75 lb)

NG → **Go to step 12**

OK

11	CHECK DTC

(a) Turn the ignition switch on (IG).
(b) Clear the DTCs stored in the center airbag sensor assembly (See page RS-34).
(c) Clear the DTCs stored in the occupant classification ECU (See page RS-215).
(d) Turn the ignition switch off.
(e) Turn the ignition switch on (IG).
(f) Check the DTCs (See page RS-215).
OK:
DTC B1783 is not output.
HINT:
Codes other than DTC B1783 may be output at this time, but they are not related to this check.

OK → **END**

NG

12	REPLACE FRONT SEAT ASSEMBLY RH

(a) Turn the ignition switch off.
(b) Disconnect the negative (-) terminal cable from the battery.
(c) Replace the front seat assembly RH (See page SE-50 for power seat or SE-40 for manual seat).

NEXT

13	PERFORM ZERO POINT CALIBRATION

(a) Connect the negative (-) terminal cable to the battery.
(b) Connect the intelligent tester to the DLC3.
(c) Turn the ignition switch on (IG).
(d) Using the intelligent tester, perform "Zero point calibration" (See page RS-206).
OK:
The "COMPLETED" is displayed.

NEXT

14	PERFORM SENSITIVITY CHECK

(a) Using the intelligent tester, perform "Sensitivity check" (See page RS-206).
Standard value:
27 to 33 kg (59.52 to 72.75 lb)

NEXT

END

DTC	B1785	Front Occupant Classification Sensor LH Collision Detection

DESCRIPTION

DTC B1785 is output when the occupant classification ECU receives a collision detection signal sent by the front occupant classification sensor LH if an accident occurs.
DTC B1785 is also output when the front seat assembly RH is subjected to a strong impact, even if an actual accident does not occur.
However, when the occupant classification ECU outputs a collision detection signal, even if the vehicle is not in a collision, DTC B1785 can be cleared by "Zero point calibration" and "Sensitivity check".
Therefore, if DTC B1785 is output, first perform "Zero point calibration" and "Sensitivity check".

DTC No.	DTC Detecting Condition	Trouble Area
B1785	• Front seat assembly RH malfunction • Occupant classification ECU malfunction • Front occupant classification sensor LH sensed large load	• Occupant classification ECU • Front seat assembly RH (Front occupant classification sensor LH)

WIRING DIAGRAM

See page RS-225.

INSPECTION PROCEDURE

1	PERFORM ZERO POINT CALIBRATION

(a) Connect the intelligent tester to the DLC3.
(b) Turn the ignition switch on (IG).
(c) Using the intelligent tester, perform "Zero point calibration" (See page RS-206).
OK:
The "COMPLETED" is displayed.

NG → **Go to step 4**

OK

2	PERFORM SENSITIVITY CHECK

(a) Using the intelligent tester, perform "Sensitivity check" (See page RS-206).
Standard value:
27 to 33 kg (59.52 to 72.75 lb)

NG → **Go to step 4**

OK

3	CHECK DTC

(a) Turn the ignition switch on (IG).
(b) Clear the DTCs stored in the center airbag sensor assembly (See page RS-34).

RS

(c) Clear the DTCs stored in the occupant classification ECU (See page RS-215).
(d) Turn the ignition switch off.
(e) Turn the ignition switch on (IG).
(f) Check the DTCs (See page RS-215).
OK:
DTC B1785 is not output.
HINT:
Codes other than DTC B1785 may be output at this time, but they are not related to this check.

OK → **END**

NG

4	REPLACE FRONT SEAT ASSEMBLY RH

(a) Turn the ignition switch off.
(b) Disconnect the negative (-) terminal cable from the battery.
(c) Replace the front seat assembly RH (See page SE-50 for power seat or SE-40 for manual seat).
HINT:
Perform the inspection using parts from a normal vehicle if possible.

NEXT

5	PERFORM ZERO POINT CALIBRATION

(a) Connect the negative (-) terminal cable to the battery.
(b) Connect the intelligent tester to the DLC3.
(c) Turn the ignition switch on (IG).
(d) Using the intelligent tester, perform "Zero point calibration" (See page RS-206).
OK:
The "COMPLETED" is displayed.

NG → **Go to step 8**

OK

6	PERFORM SENSITIVITY CHECK

(a) Using the intelligent tester, perform "Sensitivity check" (See page RS-206).
Standard value:
27 to 33 kg (59.52 to 72.75 lb)

NG → **Go to step 8**

OK

7	CHECK DTC

(a) Turn the ignition switch on (IG).
(b) Clear the DTCs stored in the center airbag sensor assembly (See page RS-34).
(c) Clear the DTCs stored in the occupant classification ECU (See page RS-215).
(d) Turn the ignition switch off.
(e) Turn the ignition switch on (IG).
(f) Check the DTCs (See page RS-215).
OK:
DTC B1785 is not output.
HINT:
Codes other than DTC B1785 may be output at this time, but they are not related to this check.

OK → END

NG

8	REPLACE OCCUPANT CLASSIFICATION ECU

(a) Turn the ignition switch off.
(b) Disconnect the negative (-) terminal cable from the battery.
(c) Replace the occupant classification ECU (See page RS-371).

NEXT

9	PERFORM ZERO POINT CALIBRATION

(a) Connect the negative (-) terminal cable to the battery.
(b) Connect the intelligent tester to the DLC3.
(c) Turn the ignition switch on (IG).
(d) Using the intelligent tester, perform "Zero point calibration" (See page RS-206).
OK:
The "COMPLETED" is displayed.

NEXT

10	PERFORM SENSITIVITY CHECK

(a) Using the intelligent tester, perform "Sensitivity check" (See page RS-206).
Standard value:
27 to 33 kg (59.52 to 72.75 lb)

NEXT

END

DTC	B1786	Front Occupant Classification Sensor RH Collision Detection

DESCRIPTION

DTC B1786 is output when the occupant classification ECU receives a collision detection signal sent by the front occupant classification sensor RH if an accident occurs.
DTC B1786 is also output when the front seat assembly RH is subjected to a strong impact, even if an actual accident does not occur.
However, when the occupant classification ECU outputs a collision detection signal, even if the vehicle is not in a collision, DTC B1786 can be cleared by "Zero point calibration" and "Sensitivity check".
Therefore, if DTC B1786 is output, first perform "Zero point calibration" and "Sensitivity check".

DTC No.	DTC Detection Condition	Trouble Area
B1786	• Front seat assembly RH malfunction • Occupant classification ECU malfunction • Front occupant classification sensor RH sensed large load	• Occupant classification ECU • Front seat assembly RH (Front occupant classification sensor RH)

WIRING DIAGRAM

See page RS-232.

INSPECTION PROCEDURE

1 PERFORM ZERO POINT CALIBRATION

(a) Connect the intelligent tester to the DLC3.
(b) Turn the ignition switch on (IG).
(c) Using the intelligent tester, perform "Zero point calibration" (See page RS-206).
OK:
The "COMPLETED" is displayed.

NG → **Go to step 4**

OK

2 PERFORM SENSITIVITY CHECK

(a) Using the intelligent tester, perform "Sensitivity check" (See page RS-206).
Standard value:
27 to 33 kg (59.52 to 72.75 lb)

NG → **Go to step 4**

OK

3 CHECK DTC

(a) Turn the ignition switch on (IG).
(b) Clear the DTCs stored in the center airbag sensor assembly (See page RS-34).

RS

(c) Clear the DTCs stored in the occupant classification ECU (See page RS-215).
(d) Turn the ignition switch off.
(e) Turn the ignition switch on (IG).
(f) Check the DTCs (See page RS-215).
OK:
DTC B1786 is not output.
HINT:
Codes other than DTC B1786 may be output at this time, but they are not related to this check.

OK → **END**

NG

4	REPLACE FRONT SEAT ASSEMBLY RH

(a) Turn the ignition switch off.
(b) Disconnect the negative (-) terminal cable from the battery.
(c) Replace the front seat assembly RH (See page SE-50 for power seat or SE-40 for manual seat).
HINT:
Perform the inspection using parts from a normal vehicle if possible.

NEXT

5	PERFORM ZERO POINT CALIBRATION

(a) Connect the negative (-) terminal cable to the battery.
(b) Connect the intelligent tester to the DLC3.
(c) Turn the ignition switch on (IG).
(d) Using the intelligent tester, perform "Zero point calibration" (See page RS-206).
OK:
The "COMPLETED" is displayed.

NG → **Go to step 8**

OK

6	PERFORM SENSITIVITY CHECK

(a) Using the intelligent tester, perform "Sensitivity check" (See page RS-206).
Standard value:
27 to 33 kg (59.52 to 72.75 lb)

NG → **Go to step 8**

OK

7	CHECK DTC

(a) Turn the ignition switch on (IG).
(b) Clear the DTCs stored in the center airbag sensor assembly (See page RS-34).
(c) Clear the DTCs stored in the occupant classification ECU (See page RS-215).
(d) Turn the ignition switch off.
(e) Turn the ignition switch on (IG).
(f) Check the DTCs (See page RS-215).
OK:
DTC B1786 is not output.
HINT:
Codes other than DTC B1786 may be output at this time, but they are not related to this check.

OK → END

NG

8	REPLACE OCCUPANT CLASSIFICATION ECU

(a) Turn the ignition switch off.
(b) Disconnect the negative (-) terminal cable from the battery.
(c) Replace the occupant classification ECU (See page RS-371).

NEXT

9	PERFORM ZERO POINT CALIBRATION

(a) Connect the negative (-) terminal cable to the battery.
(b) Connect the intelligent tester to the DLC3.
(c) Turn the ignition switch on (IG).
(d) Using the intelligent tester, perform "Zero point calibration" (See page RS-206).
OK:
The "COMPLETED" is displayed.

NEXT

10	PERFORM SENSITIVITY CHECK

(a) Using the intelligent tester, perform "Sensitivity check" (See page RS-206).
Standard value:
27 to 33 kg (59.52 to 72.75 lb)

NEXT

END

DTC	B1787	Rear Occupant Classification Sensor LH Collision Detection

DESCRIPTION

DTC B1787 is output when the occupant classification ECU receives a collision detection signal sent by the rear occupant classification sensor LH if an accident occurs.
DTC B1787 is also output when the front seat assembly RH is subjected to a strong impact, even if an actual accident does not occur.
However, when the occupant classification ECU outputs a collision detection signal, even if the vehicle is not in a collision, DTC B1787 can be cleared by "Zero point calibration" and "Sensitivity check".
Therefore, if DTC B1787 is output, first perform "Zero point calibration" and "Sensitivity check".

DTC No.	DTC Detecting Condition	Trouble Area
B1787	• Front seat assembly RH malfunction • Occupant classification ECU malfunction • Rear occupant classification sensor LH sensed large load	• Occupant classification ECU • Front seat assembly RH (Rear occupant classification sensor LH)

WIRING DIAGRAM

See page RS-239.

INSPECTION PROCEDURE

1 PERFORM ZERO POINT CALIBRATION

(a) Connect the intelligent tester to the DLC3.
(b) Turn the ignition switch on (IG).
(c) Using the intelligent tester, perform "Zero point calibration" (See page RS-206).
OK:
The "COMPLETED" is displayed.

NG → **Go to step 4**

OK

2 PERFORM SENSITIVITY CHECK

(a) Using the intelligent tester, perform "Sensitivity check" (See page RS-206).
Standard value:
27 to 33 kg (59.52 to 72.75 lb)

NG → **Go to step 4**

OK

3 CHECK DTC

(a) Turn the ignition switch on (IG).
(b) Clear the DTCs stored in the center airbag sensor assembly (See page RS-34).

(c) Clear the DTCs stored in the occupant classification ECU (See page RS-215).
(d) Turn the ignition switch off.
(e) Turn the ignition switch on (IG).
(f) Check the DTCs (See page RS-215).
OK:
DTC B1787 is not output.
HINT:
Codes other than DTC B1787 may be output at this time, but they are not related to this check.

OK → **END**

NG

4	REPLACE FRONT SEAT ASSEMBLY RH

(a) Turn the ignition switch off.
(b) Disconnect the negative (-) terminal cable from the battery.
(c) Replace the front seat assembly RH (See page SE-50 for power seat or SE-40 for manual seat).
HINT:
Perform the inspection using parts from a normal vehicle if possible.

NEXT

5	PERFORM ZERO POINT CALIBRATION

(a) Connect the negative (-) terminal cable to the battery.
(b) Connect the intelligent tester to the DLC3.
(c) Turn the ignition switch on (IG).
(d) Using the intelligent tester, perform "Zero point calibration" (See page RS-206).
OK:
The "COMPLETED" is displayed.

NG → **Go to step 8**

OK

6	PERFORM SENSITIVITY CHECK

(a) Using the intelligent tester, perform "Sensitivity check" (See page RS-206).
Standard value:
27 to 33 kg (59.52 to 72.75 lb)

NG → **Go to step 8**

OK

7	CHECK DTC

(a) Turn the ignition switch on (IG).
(b) Clear the DTCs stored in the center airbag sensor assembly (See page RS-34).
(c) Clear the DTCs stored in the occupant classification ECU (See page RS-215).
(d) Turn the ignition switch off.
(e) Turn the ignition switch on (IG).
(f) Check the DTCs (See page RS-215).
OK:
DTC B1787 is not output.
HINT:
Codes other than DTC B1787 may be output at this time, but they are not related to this check.

OK → END

NG

8	REPLACE OCCUPANT CLASSIFICATION ECU

(a) Turn the ignition switch off.
(b) Disconnect the negative (-) terminal cable from the battery.
(c) Replace the occupant classification ECU (See page RS-371).

NEXT

9	PERFORM ZERO POINT CALIBRATION

(a) Connect the negative (-) terminal cable to the battery.
(b) Connect the intelligent tester to the DLC3.
(c) Turn the ignition switch on (IG).
(d) Using the intelligent tester, perform "Zero point calibration" (See page RS-206).
OK:
The "COMPLETED" is displayed.

NEXT

10	PERFORM SENSITIVITY CHECK

(a) Using the intelligent tester, perform "Sensitivity check" (See page RS-206).
Standard value:
27 to 33 kg (59.52 to 72.75 lb)

NEXT

END

DTC	B1788	Rear Occupant Classification Sensor RH Collision Detection

DESCRIPTION

DTC B1788 is output when the occupant classification ECU receives a collision detection signal sent by the rear occupant classification sensor RH if an accident occurs.
DTC B1788 is also output when the front seat assembly RH is subjected to a strong impact, even if an actual accident does not occur.
However, when the occupant classification ECU outputs a collision detection signal, even if the vehicle is not in a collision, DTC B1788 can be cleared by "Zero point calibration" and "Sensitivity check".
Therefore, if DTC B1788 is output, first perform "Zero point calibration" and "Sensitivity check".

DTC No.	DTC Detection Condition	Trouble Area
B1788	• Front seat assembly RH malfunction • Occupant classification ECU malfunction • Rear occupant classification sensor RH sensed large load	• Occupant classification ECU • Front seat assembly RH (Rear occupant classification sensor RH)

WIRING DIAGRAM

See page RS-246.

INSPECTION PROCEDURE

1 PERFORM ZERO POINT CALIBRATION

(a) Connect the intelligent tester to the DLC3.
(b) Turn the ignition switch on (IG).
(c) Using the intelligent tester, perform "Zero point calibration" (See page RS-206).
OK:
The "COMPLETED" is displayed.

NG → **Go to step 4**

OK

2 PERFORM SENSITIVITY CHECK

(a) Using the intelligent tester, perform "Sensitivity check" (See page RS-206).
Standard value:
27 to 33 kg (59.52 to 72.75 lb)

NG → **Go to step 4**

OK

3 CHECK DTC

(a) Turn the ignition switch on (IG).
(b) Clear the DTCs stored in the center airbag sensor assembly (See page RS-34).

(c) Clear the DTCs stored in the occupant classification ECU (See page RS-215).
(d) Turn the ignition switch off.
(e) Turn the ignition switch on (IG).
(f) Check the DTCs (See page RS-215).
OK:
DTC B1788 is not output.
HINT:
Codes other than DTC B1788 may be output at this time, but they are not related to this check.

OK → **END**

NG

4	REPLACE FRONT SEAT ASSEMBLY RH

(a) Turn the ignition switch off.
(b) Disconnect the negative (-) terminal cable from the battery.
(c) Replace the front seat assembly RH (See page SE-50 for power seat or SE-40 for manual seat).
HINT:
Perform the inspection using parts from a normal vehicle if possible.

NEXT

5	PERFORM ZERO POINT CALIBRATION

(a) Connect the negative (-) terminal cable to the battery.
(b) Connect the intelligent tester to the DLC3.
(c) Turn the ignition switch on (IG).
(d) Using the intelligent tester, perform "Zero point calibration" (See page RS-206).
OK:
The "COMPLETED" is displayed.

NG → **Go to step 8**

OK

6	PERFORM SENSITIVITY CHECK

(a) Using the intelligent tester, perform "Sensitivity check" (See page RS-206).
Standard value:
27 to 33 kg (59.52 to 72.75 lb)

NG → **Go to step 8**

OK

7	CHECK DTC

(a) Turn the ignition switch on (IG).
(b) Clear the DTCs stored in the center airbag sensor assembly (See page RS-34).
(c) Clear the DTCs stored in the occupant classification ECU (See page RS-215).
(d) Turn the ignition switch off.
(e) Turn the ignition switch on (IG).
(f) Check the DTCs (See page RS-215).
OK:
DTC B1788 is not output.
HINT:
Codes other than DTC B1788 may be output at this time, but they are not related to this check.

OK → END

NG

8	REPLACE OCCUPANT CLASSIFICATION ECU

(a) Turn the ignition switch off.
(b) Disconnect the negative (-) terminal cable from the battery.
(c) Replace the occupant classification ECU (See page RS-371).

NEXT

9	PERFORM ZERO POINT CALIBRATION

(a) Connect the negative (-) terminal cable to the battery.
(b) Connect the intelligent tester to the DLC3.
(c) Turn the ignition switch on (IG).
(d) Using the intelligent tester, perform "Zero point calibration" (See page RS-206).
OK:
The "COMPLETED" is displayed.

NEXT

10	PERFORM SENSITIVITY CHECK

(a) Using the intelligent tester, perform "Zero point calibration" (See page RS-206).
Standard value:
27 to 33 kg (59.52 to 72.75 lb)

NEXT

END

DTC	B1790	Center Airbag Sensor Assembly Communication Circuit Malfunction

DESCRIPTION

The center airbag sensor assembly communication circuit consists of the occupant classification ECU and the center airbag sensor assembly.
DTC B1790 is recorded when a malfunction is detected in the center airbag sensor assembly communication circuit.

DTC No.	DTC Detecting Condition	Trouble Area
B1790	• The occupant classification ECU receives a line short circuit signal, an open circuit signal, a short circuit to ground signal or a short circuit to B+ signal in the center airbag sensor assembly communication circuit for 2 seconds. • Center airbag sensor assembly malfunction • Occupant classification ECU malfunction	• Occupant classification ECU • Center airbag sensor assembly • Floor wire No.2 • Front seat wire RH (for Power seat)

WIRING DIAGRAM

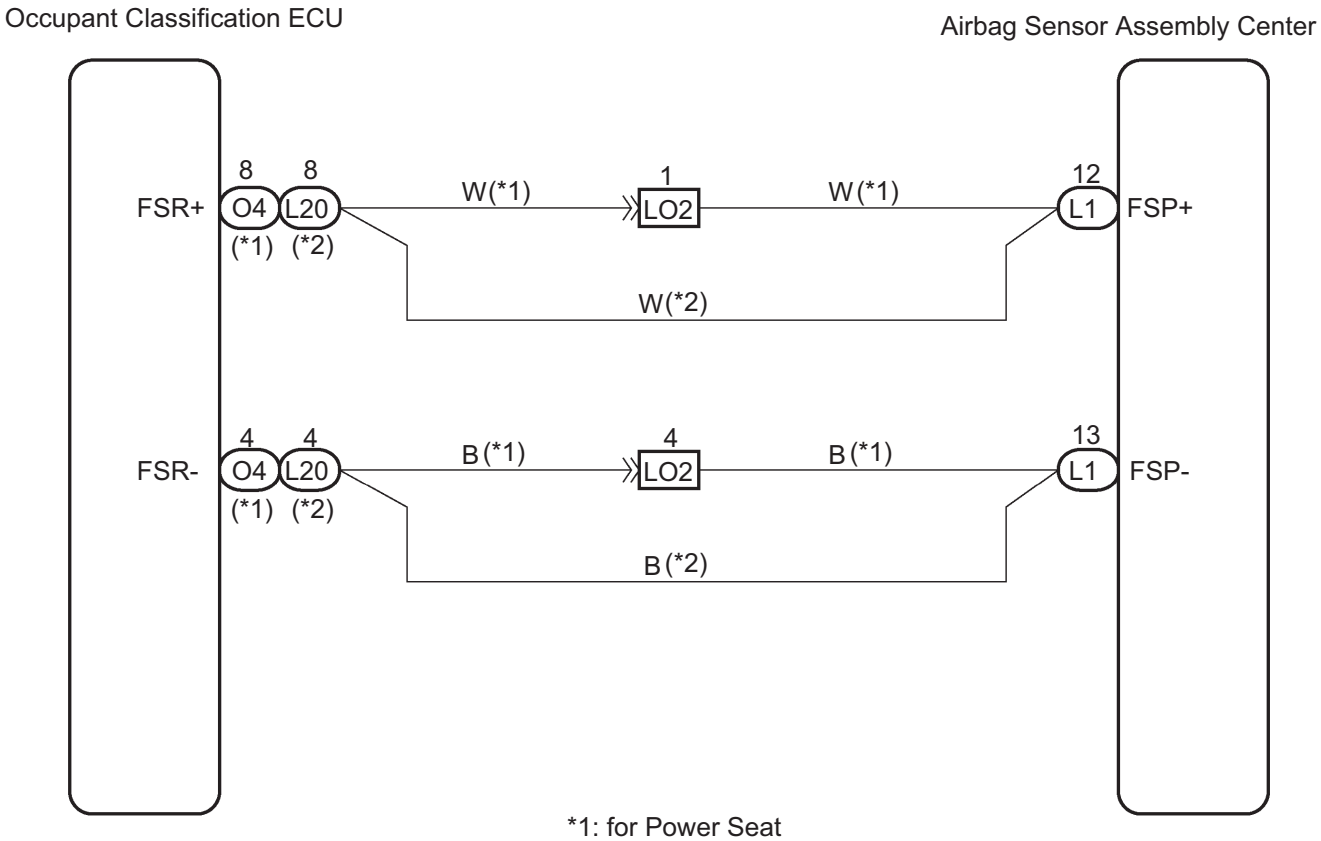

C

H045471E01

RS

INSPECTION PROCEDURE

HINT:

- If troubleshooting (wire harness inspection) is difficult to perform, remove the front passenger seat installation bolts to see the under surface of seat cushion.
- In the above case, hold the seat so that it does not fall down. Holding the seat for a long period of time may cause a problem, such as seat rail deformation. Hold the seat only as necessary.

1	CHECK DTC

(a) Turn the ignition switch on (IG).
(b) Clear the DTCs stored in the center airbag sensor assembly (See page RS-34).
(c) Clear the DTCs stored in the occupant classification ECU (See page RS-215).
(d) Turn the ignition switch off.
(e) Turn the ignition switch on (IG).
(f) Check the DTCs (See page RS-215).

OK:

DTC B1790 is not output.

HINT:

Codes other than DTC B1790 may be output at this time, but they are not related to this check.

OK → **USE SIMULATION METHOD TO CHECK**

NG

2	CHECK CONNECTION OF CONNECTORS

(a) Turn the ignition switch off.
(b) Disconnect the negative (-) terminal cable from the battery.
(c) Check that the connectors are properly connected to the occupant classification ECU and the center airbag sensor assembly.

OK:

The connectors are connected.

NG → **CONNECT CONNECTORS, THEN GO TO STEP 1**

OK

3	PREPARE FOR INSPECTION

CAUTION:
Be sure to perform the following procedures before troubleshooting to avoid unexpected airbag deployment.

(a) Turn the ignition switch off.
(b) Disconnect the negative (-) terminal cable from the battery, and wait for at least 90 seconds.
(c) Disconnect the connectors from the center airbag sensor assembly.

(d) Disconnect the connectors from the steering pad.
(e) Disconnect the connectors from the front passenger airbag assembly.
(f) Disconnect the connector from the driver side knee airbag assembly.
(g) Disconnect the connectors from the front seat side airbag assembly LH and RH.
(h) Disconnect the connectors from the curtain shield airbag LH and RH.
(i) Disconnect the connectors from the front seat outer belt assembly LH and RH.

NEXT

4	CHECK VEHICLE CONDITION

(a) Check the passenger seat type.
Result:
A:
for Power seat
B:
for Manual seat

B → **Go to step 14**

A

5	CHECK FLOOR WIRE NO.2 (SHORT TO B+)

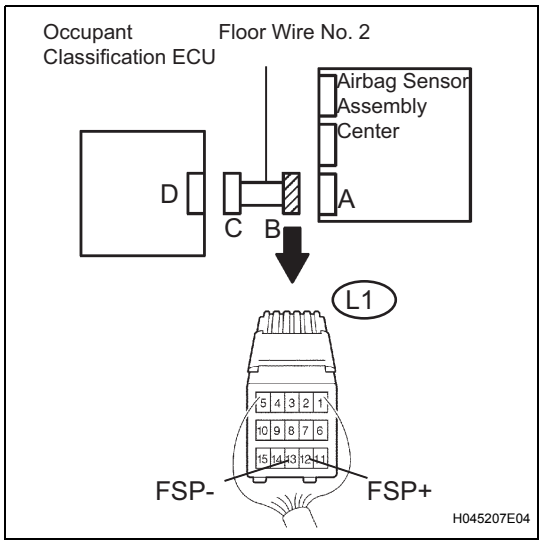

(a) Disconnect the connector from the occupant classification ECU.
(b) Connect the negative (-) terminal cable to the battery.
(c) Turn the ignition switch on (IG).
(d) Measure the voltage according to the value (s) in the table below.
Voltage

Tester connection	Condition	Specified condition
L1-12 (FSP+) - Body ground	Ignition switch on (IG)	Below 1 V
L1-13 (FSP-) - Body ground	Ignition switch on (IG)	Below 1 V

NG → **REPAIR OR REPLACE FLOOR WIRE NO.2**

OK

6 CHECK FLOOR WIRE NO.2 (OPEN)

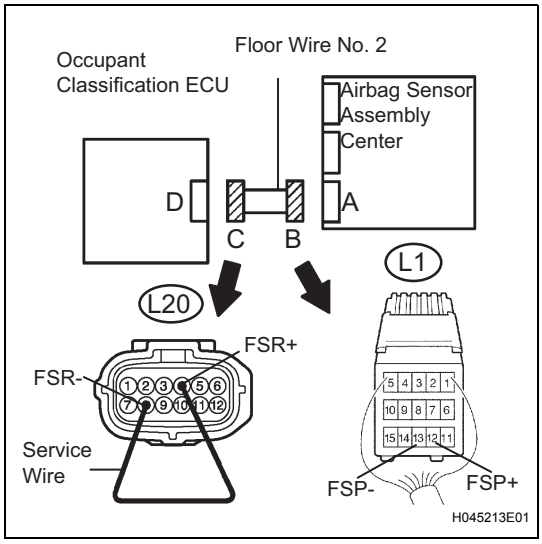

(a) Turn the ignition switch off.
(b) Disconnect the negative (-) terminal cable from the battery, and wait for at least 90 seconds.
(c) Using a service wire, connect L20-8 (FSR+) and L20-4 (FSR-) of connector "C".
NOTICE:
Do not forcibly insert a service wire into the terminals of the connector when connecting.
(d) Measure the resistance according to the value(s) in the table below.
Resistance

Tester connection	Condition	Specified condition
L1-12 (FSP+) - L1-13 (FSP-)	Always	Below 1 Ω

NG → **REPAIR OR REPLACE FLOOR WIRE NO.2**

OK

7 CHECK FLOOR WIRE NO.2 (SHORT)

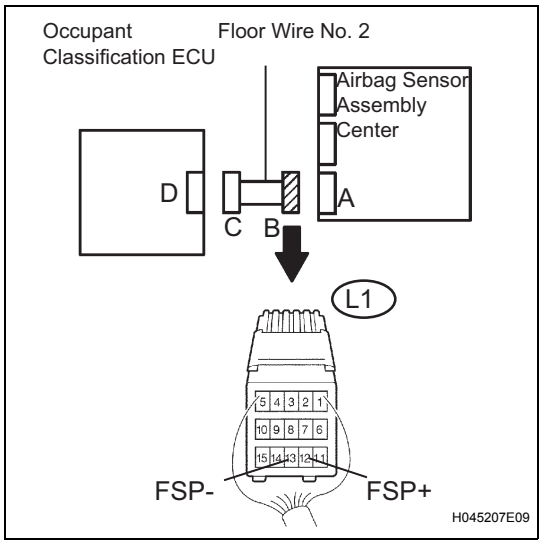

(a) Disconnect the service wire from connector "C".
(b) Measure the resistance according to the value(s) in the table below.
Resistance

Tester connection	Condition	Specified condition
L1-12 (FSP+) - L1-13 (FSP-)	Always	1 MΩ or Higher

NG → **REPAIR OR REPLACE FLOOR WIRE NO.2**

OK

8	CHECK FLOOR WIRE NO.2 (SHORT TO GROUND)

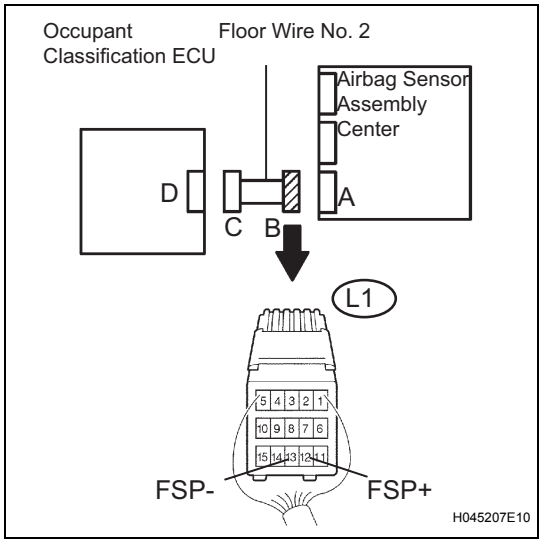

(a) Measure the resistance according to the value(s) in the table below.

Resistance

Tester connection	Condition	Specified condition
L1-12 (FSP+) - Body ground	Always	1 MΩ or Higher
L1-13 (FSP-) - Body ground	Always	1 MΩ or Higher

NG → **REPAIR OR REPLACE FLOOR WIRE NO.2**

OK

9	RECHECK DTC

(a) Connect the connectors to the occupant classification ECU and the center airbag sensor assembly.
(b) Connect the intelligent tester to the DLC3.
(c) Connect the negative (-) terminal cable to the battery.
(d) Turn the ignition switch on (IG).
(e) Clear the DTCs stored in the center airbag sensor assembly (See page RS-34).
(f) Clear the DTCs stored in the occupant classification ECU (See page RS-215).
HINT:
First clear DTCs stored in the occupant classification ECU and then in the center airbag sensor assembly.
(g) Turn the ignition switch off.
(h) Turn the ignition switch on (IG).
(i) Using the intelligent tester, check the DTCs of the occupant classification ECU (See page RS-215).
OK:
DTC B1790 is not output.
HINT:
Codes other than DTC B1790 may be output at this time, but they are not related to this check.

NG → **Go to step 10**

OK

USE SIMULATION METHOD TO CHECK

10	REPLACE OCCUPANT CLASSIFICATION ECU

(a) Turn the ignition switch off.
(b) Disconnect the negative (-) terminal cable from the battery, and wait for at least 90 seconds.
(c) Replace the occupant classification ECU (See page RS-371).
HINT:
Perform the inspection using parts from a normal vehicle if possible.

NEXT

11	PERFORM ZERO POINT CALIBRATION

(a) Connect the negative (-) terminal cable to the battery.
(b) Connect the intelligent tester to the DLC3.
(c) Turn the ignition switch on (IG).
(d) Using the intelligent tester, perform "Zero point calibration" (See page RS-206).
OK:
The "COMPLETED" is displayed.

NEXT

12	PERFORM SENSITIVITY CHECK

(a) Using the intelligent tester, perform "Sensitivity check" (See page RS-206).
Standard value:
27 to 33 kg (59.52 to 72.75 lb)

NEXT

13	RECHECK DTC

(a) Turn the ignition switch on (IG).
(b) Clear the DTCs stored in the center airbag sensor assembly (See page RS-34).
(c) Clear the DTCs stored in the occupant classification ECU (See page RS-215).
HINT:
First clear DTCs stored in the occupant classification ECU and then in the center airbag sensor assembly.
(d) Turn the ignition switch off.
(e) Turn the ignition switch on (IG).
(f) Using the intelligent tester, check the DTCs of the occupant classification ECU (See page RS-215).
OK:
DTC B1790 is not output.

HINT:
Codes other than DTC B1790 may be output at this time, but they are not related to this check.

NG → **REPLACE CENTER AIRBAG SENSOR ASSEMBLY**

OK

END

14 CHECK OCCUPANT CLASSIFICATION SYSTEM CIRCUIT (TO B+)

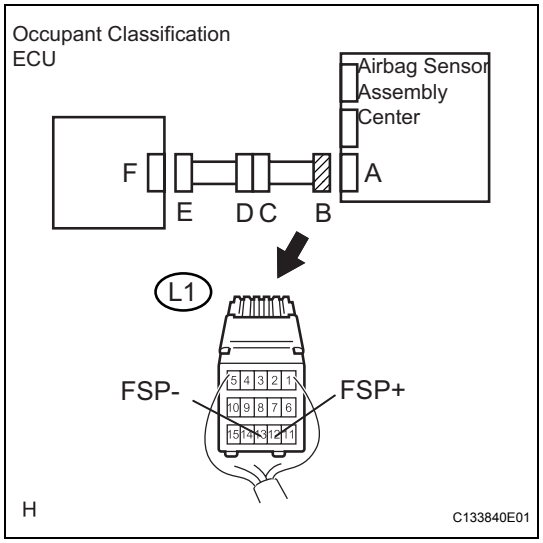

(a) Disconnect the connector from the occupant classification ECU.
(b) Connect the negative (-) terminal cable to the battery.
(c) Turn the ignition switch on (IG).
(d) Measure the voltage according to the value(s) in the table below.

Voltage

Tester connection	Condition	Specified condition
L1-12 (FSP+) - Body ground	Ignition switch on (IG)	Below 1 V
L1-13 (FSP-) - Body ground	Ignition switch on (IG)	Below 1 V

NG → **Go to step 23**

OK

15 CHECK OCCUPANT CLASSIFICATION SYSTEM CIRCUIT (OPEN)

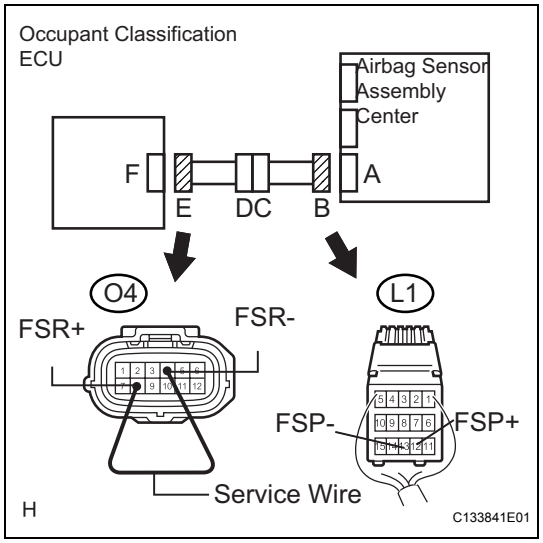

(a) Turn the ignition switch off.
(b) Disconnect the negative (-) terminal cable from the battery.
(c) Using a service wire, connect O4-8 (FSR+) and O4-4 (FSR-) of connector "E".

NOTICE:
Do not forcibly insert a service wire into the terminals of the connector when connecting.

(d) Measure the resistance according to the value(s) in the table below.

Resistance

Tester connection	Condition	Specified condition
L1-12 (FSP+) - L1-13 (FSP-)	Always	Below 1 Ω

NG → **Go to step 24**

RS

OK

16 CHECK OCCUPANT CLASSIFICATION SYSTEM CIRCUIT (SHORT)

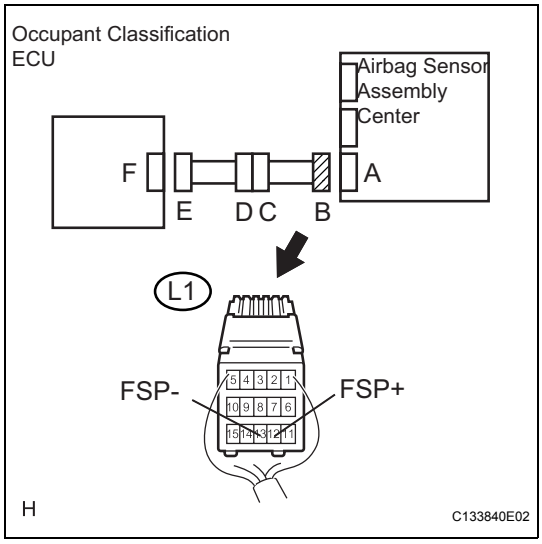

(a) Disconnect the service wire from connector "E".
(b) Measure the resistance according to the value(s) in the table below.
Resistance

Tester connection	Condition	Specified condition
L1-12 (FSP+) - L1-13 (FSP-)	Always	1 MΩ or Higher

NG → **Go to step 25**

OK

17 CHECK OCCUPANT CLASSIFICATION SYSTEM CIRCUIT (TO GROUND)

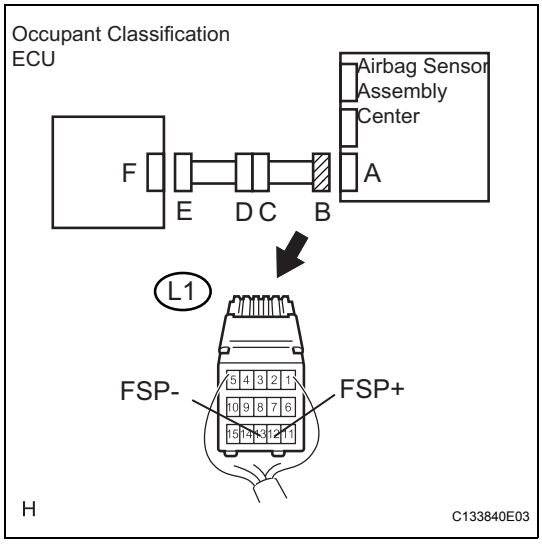

(a) Measure the resistance according to the value(s) in the table below.
Resistance

Tester connection	Condition	Specified condition
L1-12 (FSP+) - Body ground	Always	1 MΩ or Higher
L1-13 (FSP-) - Body ground	Always	1 MΩ or Higher

NG → **Go to step 26**

OK

18 RECHECK DTC

(a) Connect the connectors to the occupant classification ECU and the center airbag sensor assembly.
(b) Connect the intelligent tester to the DLC3.
(c) Connect the negative (-) terminal cable to the battery.
(d) Turn the ignition switch on (IG).
(e) Clear the DTCs stored in the center airbag sensor assembly (See page RS-34).

RS

(f) Clear the DTCs stored in the occupant classification ECU (See page RS-215).
(g) Turn the ignition switch off.
(h) Turn the ignition switch on (IG).
(i) Using the intelligent tester, check the DTCs of the occupant classification ECU (See page RS-215).
OK:
DTC B1790 is not output.
HINT:
Codes other than DTC B1790 may be output at this time, but they are not related to this check.

NG → **Go to step 19**

OK

USE SIMULATION METHOD TO CHECK

19 REPLACE OCCUPANT CLASSIFICATION ECU

(a) Turn the ignition switch off.
(b) Disconnect the negative (-) terminal cable from the battery, and wait for at least 90 seconds.
(c) Replace the occupant classification ECU (See page RS-371).
HINT:
Perform the inspection using parts from a normal vehicle if possible.

NEXT

20 PERFORM ZERO POINT CALIBRATION

(a) Connect the negative (-) terminal cable to the battery.
(b) Connect the intelligent tester to the DLC3.
(c) Turn the ignition switch on (IG).
(d) Using the intelligent tester, perform "Zero point calibration" (See page RS-206)
OK:
The "COMPLETED" is displayed.

NEXT

21 PERFORM SENSITIVITY CHECK

(a) Using the intelligent tester, perform "Sensitivity check" (See page RS-206).
Standard value:
27 to 33 kg (59.52 to 72.15 lb)

NEXT

22	RECHECK DTC

(a) Turn the ignition switch on (IG).
(b) Clear the DTCs stored in the center airbag sensor assembly (See page RS-34).
(c) Clear the DTCs stored in the occupant classification ECU (See page RS-215).
(d) Turn the ignition switch off.
(e) Turn the ignition switch on (IG).
(f) Using the intelligent tester, check the DTCs of the occupant classification ECU (See page RS-215).
OK:
DTC B1790 is not output.
HINT:
Codes other than DTC B1790 may be output at this time, but they are not related to this check.

NG → **REPLACE CENTER AIRBAG SENSOR ASSEMBLY**

OK

END

23	CHECK FRONT SEAT WIRE RH (TO B+)

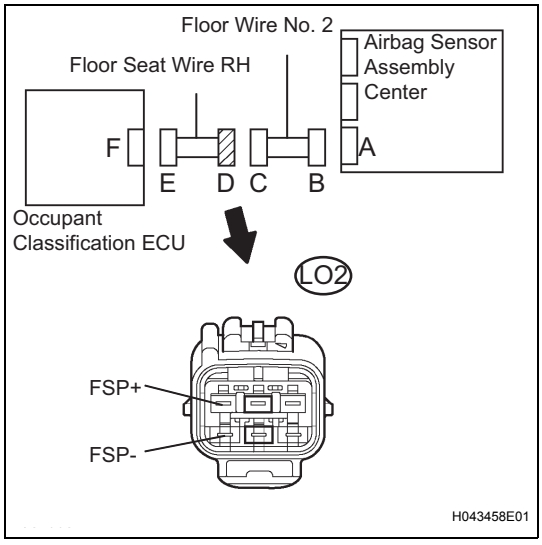

(a) Turn the ignition switch off.
(b) Disconnect the negative (-) Terminal cable from the battery, and wait for at least 90 seconds.
(c) Disconnect the floor wire No. 2 connector from the front seat wire RH.
(d) Connect the negative (-) terminal cable to the battery, and wait for at least 2 seconds.
(e) Turn the ignition switch on (IG).
(f) Measure the voltage according to the value(s) in the table below.
Voltage

Tester connection	Condition	Specified condition
LO2-1 (FSP+) - Body ground	Ignition switch on (IG)	Below 1 V
LO2-4 (FSP-) - Body ground	Ignition switch on (IG)	Below 1 V

NG → **REPAIR OR REPLACE FRONT SEAT WIRE RH**

OK

RS

REPAIR OR REPLACE FLOOR WIRE NO.2

24 CHECK FRONT SEAT WIRE RH (OPEN)

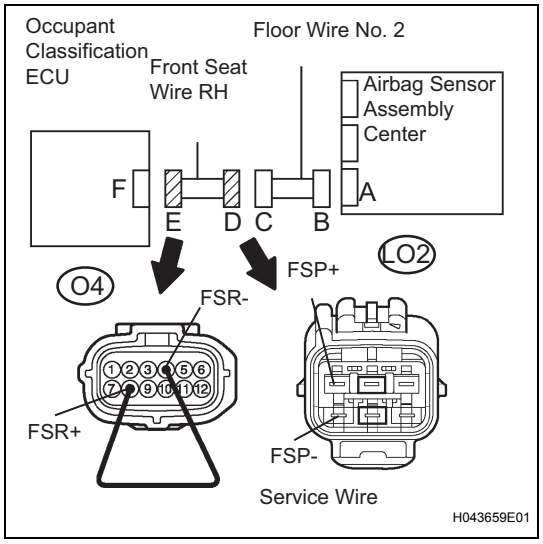

(a) Disconnect the floor wire No. 2 connector from the front seat wire RH.
HINT:
The service wire has already been inserted into connector "E".

(b) Measure the resistance according to the value(s) in the table below.
Resistance

Tester connection	Condition	Specified condition
LO2-1 (FSP+) - LO2-4 (FSP-)	Always	Below 1 Ω

NG → **REPAIR OR REPLACE FRONT SEAT WIRE RH**

OK

REPAIR OR REPLACE FLOOR WIRE NO.2

25 CHECK FRONT SEAT WIRE RH (SHORT)

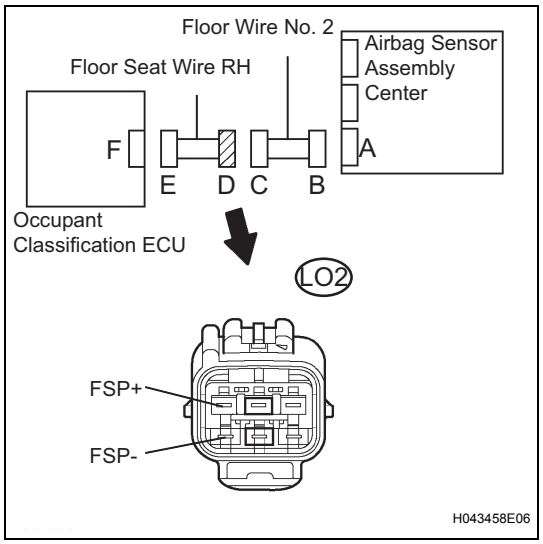

(a) Disconnect the floor wire No. 2 connector from the front seat wire RH.

(b) Measure the resistance according to the value(s) in the table below.
Resistance

Tester connection	Condition	Specified condition
LO2-1 (FSP+) - LO2-4 (FSP-)	Always	1 MΩ or Higher

NG → **REPAIR OR REPLACE FRONT SEAT WIRE RH**

OK

REPAIR OR REPLACE FLOOR WIRE NO.2

26	CHECK FRONT SEAT WIRE RH (TO GROUND)

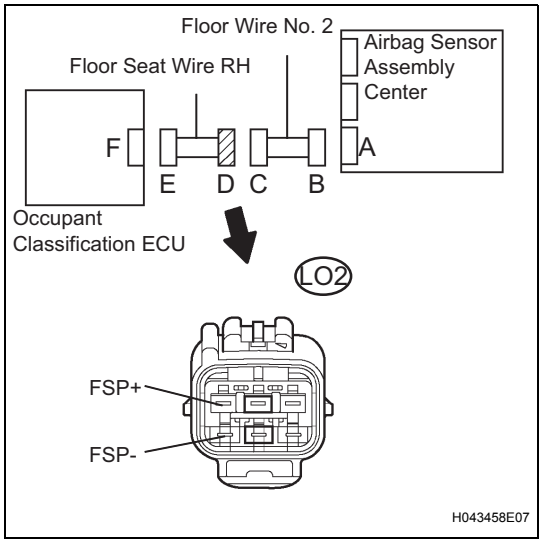

(a) Disconnect the floor wire No. 2 connector from the front seat wire RH.
(b) Measure the resistance according to the value(s) in the table below.

Resistance

Tester connection	Condition	Specified condition
LO2-1 (FSP+) - Body ground	Always	1 MΩ or Higher
LO2-4 (FSP-) - Body ground	Always	1 MΩ or Higher

NG → **REPAIR OR REPLACE FRONT SEAT WIRE RH**

OK

REPAIR OR REPLACE FLOOR WIRE NO.2

DTC	B1793	Occupant Classification Sensor Power Supply Circuit Malfunction

DESCRIPTION

The occupant classification sensor power supply circuit consists of the occupant classification ECU and the occupant classification sensors.
DTC B1793 is recorded when a malfunction is detected in the occupant classification sensor power supply circuit.

DTC No.	DTC Detecting Condition	Trouble Area
B1793	• The occupant classification ECU receives a line short circuit signal, an open circuit signal, a short circuit to ground signal or a short circuit to B+ signal in the occupant classification sensor power supply circuit for 2 seconds. • Occupant classification ECU malfunction	• Front seat assembly RH (Occupant classification sensors) • Front seat wire RH • Occupant classification ECU

WIRING DIAGRAM

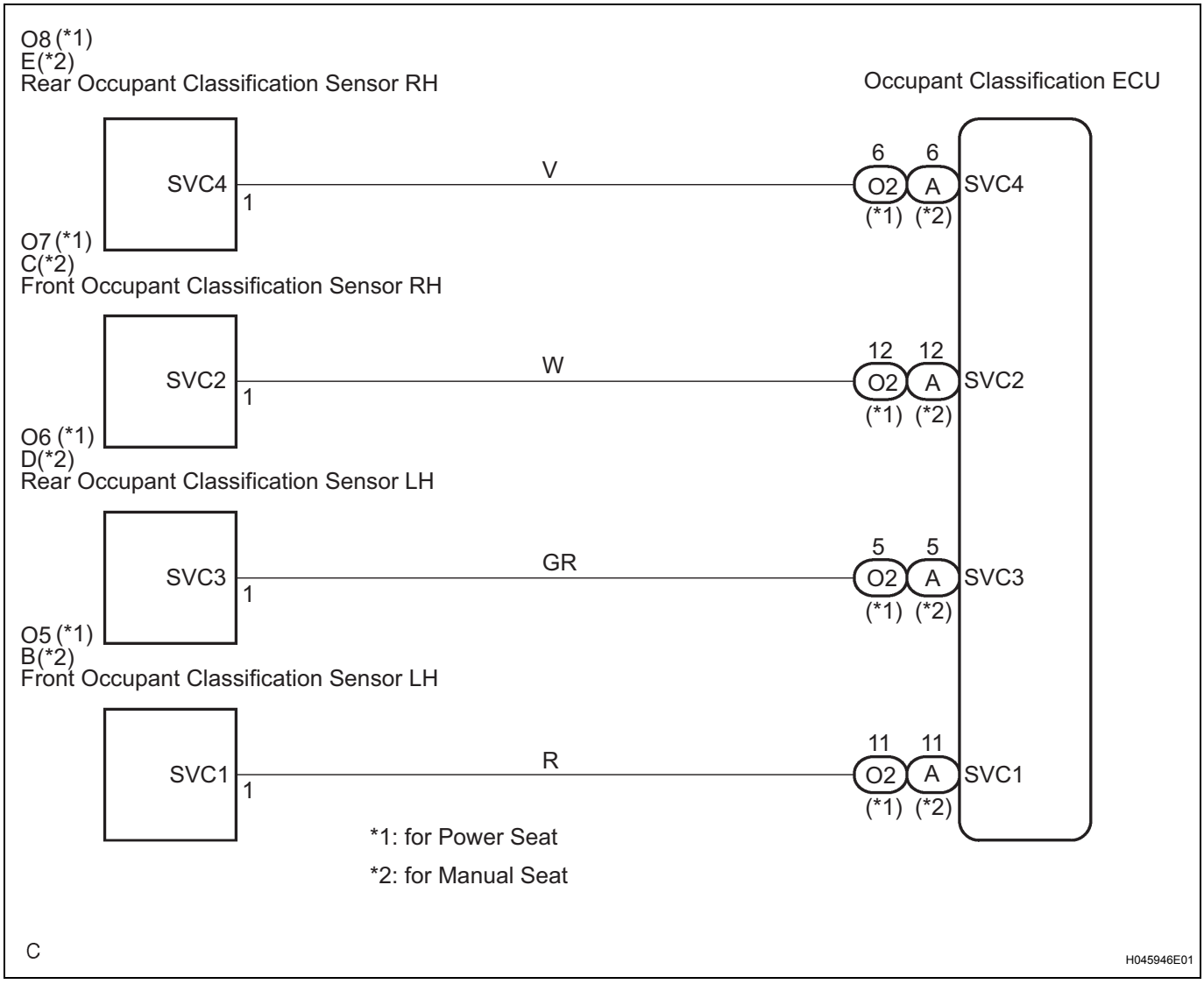

INSPECTION PROCEDURE

HINT:

- If troubleshooting (wire harness inspection) is difficult to perform, remove the front passenger seat installation bolts to see the under surface of seat cushion.
- In the above case, hold the seat so that it does not fall down. Holding the seat for a long period of time may cause a problem, such as seat rail deformation. Hold the seat only as necessary.

1	CHECK DTC

(a) Turn the ignition switch on (IG).
(b) Clear the DTCs stored in the center airbag sensor assembly (See page RS-34).
(c) Clear the DTCs stored in the occupant classification ECU (See page RS-215).
(d) Turn the ignition switch off.
(e) Turn the ignition switch on (IG).
(f) Check the DTCs (See page RS-215).

OK:

DTC B1793 is not output.

HINT:

Codes other than DTC B1793 may be output at this time, but they are not related to this check.

OK → **USE SIMULATION METHOD TO CHECK**

NG

2	CHECK CONNECTION OF CONNECTORS

(a) Turn the ignition switch off.
(b) Disconnect the negative (-) terminal cable from the battery, and wait for at least 90 seconds.
(c) Check that the connectors are properly connected to the occupant classification ECU and the occupant classification sensors.

OK:

The connectors are connected.

NG → **CONNECT CONNECTORS, THEN GO TO STEP 1**

OK

3 CHECK FRONT SEAT WIRE RH (SHORT TO B+)

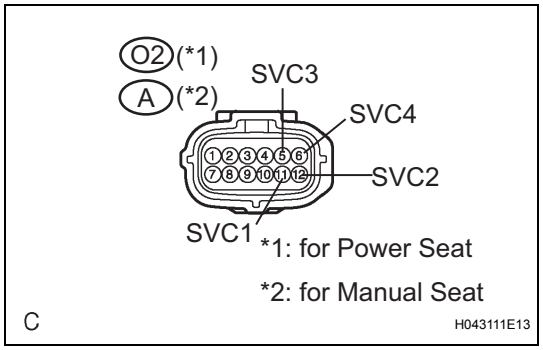

(a) Disconnect the connectors from the occupant classification ECU and the 4 occupant classification sensors.
(b) Connect the negative (-) terminal cable to the battery.
(c) Turn the ignition switch on (IG).
(d) Measure the voltage according to the value(s) in the table below.

Voltage

Tester connection	Condition	Specified condition
O2-5 (SVC3) - Body ground (*1)	Ignition switch on (IG)	Below 1 V
O2-6 (SVC4) - Body ground (*1)	Ignition switch on (IG)	Below 1 V
O2-11 (SVC1) - Body ground (*1)	Ignition switch on (IG)	Below 1 V
O2-12 (SVC2) - Body ground (*1)	Ignition switch on (IG)	Below 1 V
A-5 (SVC3) - Body ground (*2)	Ignition switch on (IG)	Below 1 V
A-6 (SVC4) - Body ground (*2)	Ignition switch on (IG)	Below 1 V
A-11 (SVC1) - Body ground (*2)	Ignition switch on (IG)	Below 1 V
A-12 (SVC2) - Body ground (*2)	Ignition switch on (IG)	Below 1 V

*1: for Power seat
*2: for Manual seat

NG → REPAIR OR REPLACE FRONT SEAT WIRE RH

OK

4 CHECK FRONT SEAT WIRE RH (SHORT TO GROUND)

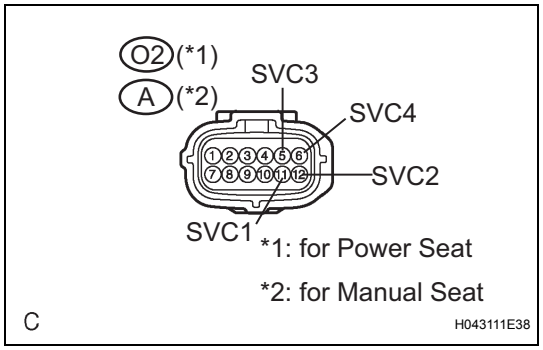

(a) Turn the ignition switch off.
(b) Disconnect the negative (-) terminal cable from the battery, and wait for at least 90 seconds.
(c) Measure the resistance according to the value(s) in the table below.

Resistance

Tester connection	Condition	Specified condition
O2-5 (SVC3) - Body ground (*1)	Always	1 MΩ or Higher
O2-6 (SVC4) - Body ground (*1)	Always	1 MΩ or Higher
O2-11 (SVC1) - Body ground (*1)	Always	1 MΩ or Higher
O2-12 (SVC2) - Body ground (*1)	Always	1 MΩ or Higher

Tester connection	Condition	Specified condition
A-5 (SVC3) - Body ground (*2)	Always	1 MΩ or Higher
A-6 (SVC4) - Body ground (*2)	Always	1 MΩ or Higher
A-11 (SVC1) - Body ground (*2)	Always	1 MΩ or Higher
A-12 (SVC2) - Body ground (*2)	Always	1 MΩ or Higher

*1: for Power seat
*2: for Manual seat

NG → REPAIR OR REPLACE FRONT SEAT WIRE RH

OK

5 CHECK FRONT SEAT WIRE RH (OPEN)

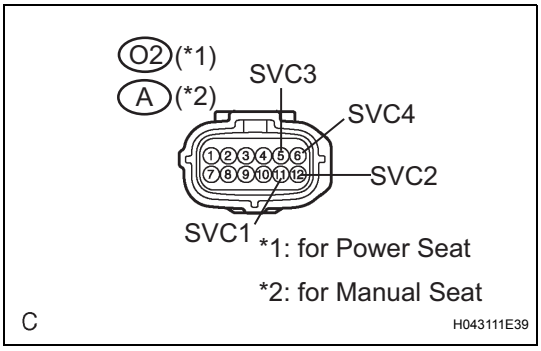

(a) Measure the resistance according to the value(s) in the table below.

Resistance

Tester connection	Condition	Specified condition
O2-5 (SVC3) - O6-1 (SVC3) (*1)	Always	Below 1 Ω
O2-6 (SVC4) - O8- 1 (SVC4) (*1)	Always	Below 1 Ω
O2-11 (SVC1) - O5-1 (SVC1) (*1)	Always	Below 1 Ω
O2-12 (SVC2) - O7-1 (SVC2) (*1)	Always	Below 1 Ω
A-5 (SVC3) - D-1 (SVC3) (*2)	Always	Below 1 Ω
A-6 (SVC4) - E- 1 (SVC4) (*2)	Always	Below 1 Ω
A-11 (SVC1) - B-1 (SVC1) (*2)	Always	Below 1 Ω
A-12 (SVC2) - C-1 (SVC2) (*2)	Always	Below 1 Ω

*1: for Power seat
*2: for Manual seat

NG → REPAIR OR REPLACE FRONT SEAT WIRE RH

OK

6	CHECK FRONT SEAT WIRE RH (SHORT)

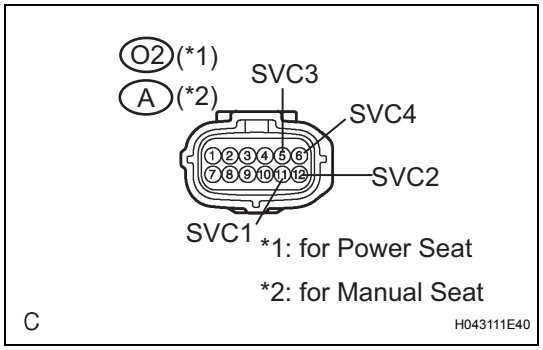

(a) Measure the resistance according to the value(s) in the table below.

Resistance

Tester connection	Condition	Specified condition
O2-5 (SVC3) - O2-6 (SVC4) (*1)	Always	1 MΩ or Higher
O2-5 (SVC3) - O2-11 (SVC1) (*1)	Always	1 MΩ or Higher
O2-5 (SVC3) - O2-12 (SVC2) (*1)	Always	1 MΩ or Higher
O2-6 (SVC4) - O2-11 (SVC1) (*1)	Always	1 MΩ or Higher
O2-6 (SVC4) - O2-12 (SVC2) (*1)	Always	1 MΩ or Higher
O2-11 (SVC1) - O2-12 (SVC2) (*1)	Always	1 MΩ or Higher
A-5 (SVC3) - A-6 (SVC4) (*2)	Always	1 MΩ or Higher
A-5 (SVC3) - A-11 (SVC1) (*2)	Always	1 MΩ or Higher
A-5 (SVC3) - A-12 (SVC2) (*2)	Always	1 MΩ or Higher
A-6 (SVC4) - A-11 (SVC1) (*2)	Always	1 MΩ or Higher
A-6 (SVC4) - A-12 (SVC2) (*2)	Always	1 MΩ or Higher
A-11 (SVC1) - A-12 (SVC2) (*2)	Always	1 MΩ or Higher

*1: for Power seat
*2: for Manual seat

NG → **REPAIR OR REPLACE FRONT SEAT WIRE RH**

OK

7	CHECK DTC

(a) Connect the connectors to the occupant classification ECU and the 4 occupant classification sensors.
(b) Connect the negative (-) terminal cable to the battery.
(c) Turn the ignition switch on (IG).
(d) Clear the DTCs stored in the center airbag sensor assembly (See page RS-34).
(e) Clear the DTCs stored in the occupant classification ECU (See page RS-215).
(f) Turn the ignition switch off.
(g) Turn the ignition switch on (IG).
(h) Check the DTCs (See page RS-215).

OK:

DTC B1793 is not output.

HINT:
Codes other than DTC B1793 may be output at this time, but they are not related to this check.

OK → **USE SIMULATION METHOD TO CHECK**

NG

8	REPLACE OCCUPANT CLASSIFICATION ECU

(a) Turn the ignition switch off.
(b) Disconnect the negative (-) terminal cable from the battery.
(c) Replace the occupant classification ECU (See page RS-215).
HINT:
Perform the inspection using parts from a normal vehicle if possible.

NEXT

9	PERFORM ZERO POINT CALIBRATION

(a) Connect the negative (-) terminal cable to the battery.
(b) Connect the intelligent tester to the DLC3.
(c) Turn the ignition switch on (IG).
(d) Using the intelligent tester, perform "Zero point calibration" (See page RS-206).
OK:
The "COMPLETED" is displayed.

NG → **Go to step 12**

OK

10	PERFORM SENSITIVITY CHECK

(a) Using the intelligent tester, perform "Sensitivity check" (See page RS-206).
Standard value:
27 to 33 kg (59.52 to 72.75 lb)

NG → **Go to step 12**

OK

11	CHECK DTC

(a) Turn the ignition switch on (IG).
(b) Clear the DTCs stored in the center airbag sensor assembly (See page RS-34).
(c) Clear the DTCs stored in the occupant classification ECU (See page RS-215).
(d) Turn the ignition switch off.

(e) Turn the ignition switch on (IG).
(f) Check the DTCs (See page RS-215).
OK:
DTC B1793 is not output.
HINT:
Codes other than DTC B1793 may be output at this time, but they are related to this check.

OK → **END**

NG

12	REPLACE FRONT SEAT ASSEMBLY RH

(a) Turn the ignition switch off.
(b) Disconnect the negative (-) terminal cable from the battery.
(c) Replace the front seat assembly RH (See page SE-50 for power seat or SE-40 for manual seat).

NEXT

13	PERFORM ZERO POINT CALIBRATION

(a) Connect the negative (-) terminal cable to the battery.
(b) Connect the intelligent tester to the DLC3.
(c) Turn the ignition switch on (IG).
(d) Using the intelligent tester, perform "Zero point calibration" (See page RS-206).
OK:
The "COMPLETED" is displayed.

NEXT

14	PERFORM SENSITIVITY CHECK

(a) Using the intelligent tester, perform "Sensitivity check" (See page RS-206).
Standard value:
27 to 33 kg (59.52 to 72.75 lb)

NEXT

END

DTC	B1794	Open in Occupant Classification ECU Battery Positive Line

DESCRIPTION

This circuit consists of the occupant classification ECU and the power source circuit (battery, fuse, wire harness).
DTC B1794 is recorded when a malfunction is detected in the occupant classification ECU or the power source circuit.
HINT:
When DTC B1794 is output after switching the ignition switch off-on (IG)-off 50 times in a row when a malfunction occurs in the power circuit for the occupant classification system, the DTC is output again when a malfunction is detected even once after being cleared, unless the normal system code is input.

DTC No.	DTC Detecting Condition	Trouble Area
B1794	• The ignition switch is turned from off to on (IG), hold for 10 seconds or more, and back to off again 50 times in a row when a malfunction occurs in the circuit for the occupant classification system. • Occupant classification ECU malfunction	• Battery • ECU-B Fuse • Floor wire No. 2 • Front seat wire RH (for Power seat) • Occupant classification ECU

WIRING DIAGRAM

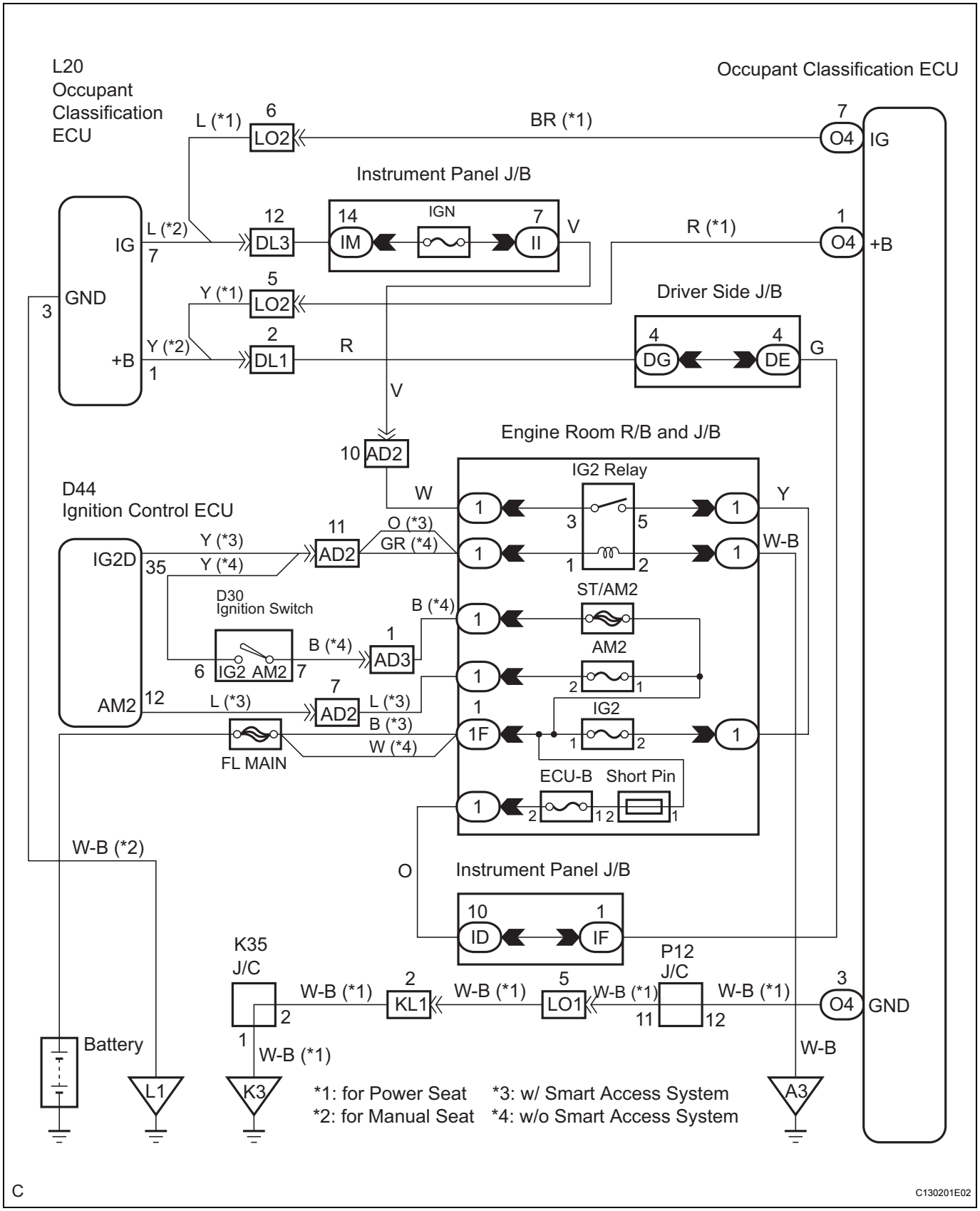

RS

INSPECTION PROCEDURE

1 CHECK BATTERY

(a) Measure the voltage of the battery.
Voltage:
11 to 14 V

NG → **REPLACE BATTERY**

OK

2 CHECK FUSE

(a) Check the ECU-B fuse.
Resistance:
Below 1 Ω

NG → **REPLACE FUSE**

OK

3 CHECK WIRE HARNESS (SOURCE VOLTAGE)

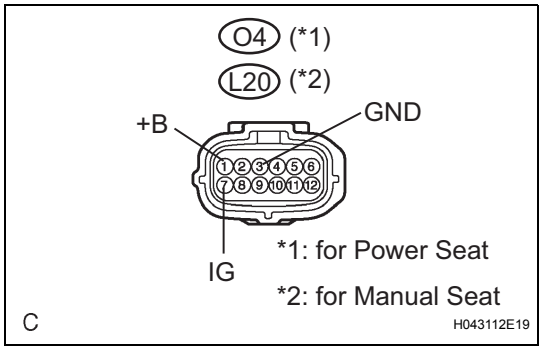

(a) Turn the ignition switch off.
(b) Disconnect the negative (-) terminal cable from the battery, and wait for at least 90 seconds.
(c) Disconnect the connector from the occupant classification ECU.
(d) Connect the negative (-) terminal cable to the battery.
(e) Turn the ignition switch on (IG).
(f) Measure the voltage and resistance according to the value(s) in the table below.
Standard

Tester connection	Condition	Specified condition
O4-1 (+B) - Body ground (*1)	Always	10 to 14 V
O4-3 (GND) - Body ground (*1)	Always	Below 1 Ω
O4-7 (IG) - Body ground (*1)	Ignition switch on (IG)	10 to 14 V
L20-1 (+B) - Body ground (*2)	Always	10 to 14 V
L20-3 (GND) - Body ground (*2)	Always	Below 1 Ω
L20-7 (IG) - Body ground (*2)	Ignition switch on (IG)	10 to 14 V

*1: for Power seat
*2: for Manual seat

NG → **REPAIR OR REPLACE WIRE HARNESS**

OK

RS

4	CHECK DTC

(a) Turn the ignition switch off.
(b) Disconnect the negative (-) terminal cable from the battery.
(c) Connect the connector to the occupant classification ECU.
(d) Connect the intelligent tester to the DLC3.
(e) Connect the negative (-) terminal cable to the battery.
(f) Turn the ignition switch on (IG).
(g) Clear the DTCs stored in the center airbag sensor assembly (See page RS-34).
(h) Clear the DTCs stored in the occupant classification ECU (See page RS-215).
HINT:
First clear DTCs stored in the occupant classification ECU and then in the center airbag sensor assembly.
(i) Turn the ignition switch off.
(j) Turn the ignition switch on (IG), and wait for at least 10 seconds.
(k) Using the intelligent tester, check the DTCs of the occupant classification ECU (See page RS-215).
OK:
B1794 is not output.
HINT:
Codes other than DTC B1794 may be output at this time, but they are not related to this check.

NG	Go to step 5

OK

USE SIMULATION METHOD TO CHECK

5	REPLACE OCCUPANT CLASSIFICATION ECU

(a) Turn the ignition switch off.
(b) Disconnect the negative (-) terminal cable from the battery, and wait for at least 90 seconds.
(c) Replace the occupant classification ECU (See page RS-371).
HINT:
Perform the inspection using parts from a normal vehicle if possible.

NEXT

6	PERFORM ZERO POINT CALIBRATION

(a) Connect the negative (-) terminal cable to the battery.
(b) Connect the intelligent tester to the DLC3.

(c) Turn the ignition switch on (IG).
(d) Using the intelligent tester, perform the "Zero point calibration" (See page RS-206).
OK:
The "COMPLETED" is displayed.

NEXT

7	PERFORM SENSITIVITY CHECK

(a) Using the intelligent tester, perform the "Sensitivity check" (See page RS-206).
Standard value:
27 to 33 kg (59.52 to 72.75 lb)

NEXT

END

DTC	B1795	Occupant Classification ECU Malfunction

DESCRIPTION

DTC B1795 is recorded when a malfunction is detected in the occupant classification ECU.
Troubleshoot the DTC B1771 first when the DTC B1771 and B1795 are output simultaneously.

DTC No.	DTC Detecting Condition	Trouble Area
B1795	• Occupant classification ECU circuit malfunction • The occupant classification ECU receives a short circuit to ground signal in the passenger side buckle switch circuit for 2 seconds. • Occupant classification ECU malfunction	• Front seat wire RH (for Power seat) • Floor wire No.2 • Front seat inner belt assembly RH • Occupant classification ECU

INSPECTION PROCEDURE

1 CHECK DTC

(a) Turn the ignition switch on (IG), and wait for at least 10 seconds.
(b) Check the DTCs (See page RS-215).
Result:
A:
DTC B1771 and B1795 are output.
B:
DTC B1795 is output.
HINT:
Codes other than DTC B1771 and B1795 may be output at this time, but they are not related to this check.

A → **GO TO DTC (B1771)**

B

2 CHECK FUSE

(a) Check the ECU-B fuse.
Resistance:
Below 1 Ω

NG → **REPLACE FUSE**

OK

3 CHECK WIRE HARNESS (SOURCE VOLTAGE)

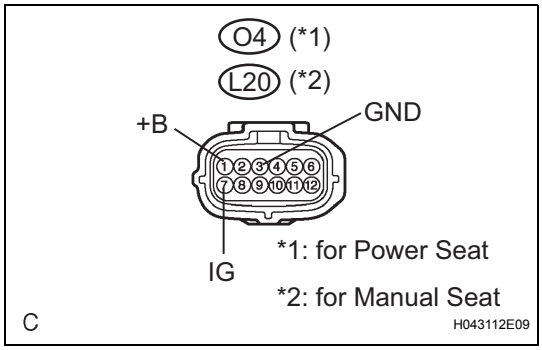

(a) Turn the ignition switch off.
(b) Disconnect the negative (-) terminal cable from the battery.
(c) Disconnect the connector from the occupant classification ECU.
(d) Connect the negative (-) terminal cable to the battery.
(e) Turn the ignition switch on (IG).
(f) Measure the voltage according to the value(s) in the table below.

Voltage

Tester connection	Condition	Specified condition
O4-1 (+B) - Body ground (*1)	Always	10 to 14 V
O4-7 (IG) - Body ground (*1)	Ignition switch on (*1)	10 to 14 V
L20-1 (+B) - Body ground (*2)	Always	10 to 14 V
L20-7 (IG) - Body ground (*2)	Ignition switch on (*1)	10 to 14 V

*1: for Power seat
*2: for Manual seat

(g) Turn the ignition switch off.
(h) Measure the resistance according to the value(s) in the table below.

Resistance

Tester connection	Condition	Specified condition
O4-3 (GND) - Body ground (*1)	Always	Below 1 Ω
L20-3 (GND) - Body ground (*2)	Always	Below 1 Ω

*1: for Power seat
*2: for Manual seat

NG → REPAIR OR REPLACE WIRE HARNESS

OK

4 REPLACE OCCUPANT CLASSIFICATION ECU

(a) Turn the ignition switch off.
(b) Disconnect the negative (-) terminal cable from the battery.
(c) Replace the occupant classification ECU (See page RS-215).
HINT:
Perform the inspection using parts from a normal vehicle if possible.

RS

NEXT

5	PERFORM ZERO POINT CALIBRATION

(a) Connect the negative (-) terminal cable to the battery.
(b) Connect the intelligent tester to the DLC3.
(c) Turn the ignition switch on (IG).
(d) Using the intelligent tester, perform "Zero point calibration" (See page RS-206).
OK:
The "COMPLETED" is displayed.

NEXT

6	PERFORM SENSITIVITY CHECK

(a) Using the intelligent tester, perform "Sensitivity check" (See page RS-206).
Standard value:
27 to 33 kg (59.52 to 72.75 lb)

NEXT

END

DTC	B1796	Sleep Operation Failure of Occupant Classification ECU

DESCRIPTION

During sleep mode, the occupant classification ECU reads the condition of each sensor while the ignition switch is off.
In this mode, if occupant classification ECU detects an internal malfunction, DTC B1796 is output.

DTC No.	DTC Detecting Condition	Trouble Area
B1796	• Occupant classification ECU malfunction	• Occupant classification ECU

INSPECTION PROCEDURE

1 CHECK DTC

(a) Turn the ignition switch on (IG).
(b) Clear the DTCs stored in memory (See page RS-215).
HINT:
First clear DTCs stored in the occupant classification ECU and then in the center airbag sensor assembly.
(c) Turn the ignition switch off, and wait for at least 10 seconds.
(d) Turn the ignition switch on (IG).
(e) Check the DTCs (See page RS-215).
OK:
DTC B1796 is not output.
HINT:
Codes other than DTC B1796 may be output at this time, but they are not related to this check.

OK → **USE SIMULATION METHOD TO CHECK**

NG

2 REPLACE OCCUPANT CLASSIFICATION ECU

(a) Turn the ignition switch off.
(b) Disconnect the negative (-) terminal cable from the battery.
(c) Replace the occupant classification ECU (See page RS-371).
HINT:
Perform the inspection using parts from a normal vehicle if possible.

NEXT

3 PERFORM ZERO POINT CALIBRATION

(a) Connect the negative (-) terminal cable to the battery.
(b) Connect the intelligent tester to the DLC3.
(c) Turn the ignition switch on (IG).

(d) Using the intelligent tester, perform "Zero point calibration" (See page RS-206).
OK:
The "COMPLETED" is displayed.

NEXT

4	PERFORM SENSITIVITY CHECK

(a) Using the intelligent tester, perform "Sensitivity check" (See page RS-206).
Standard value:
27 to 33 kg (59.52 to 72.75 lb)

NEXT

END

Trouble in Passenger Airbag ON / OFF Indicator

DESCRIPTION

The occupant classification system detects the front passenger seat condition. It then informs a passenger of the front passenger airbag assembly condition (activated/not activated) by the passenger airbag ON/OFF indicator.
The table below shows the normal indication condition of the passenger airbag ON/OFF indicator and the front passenger seat condition.

Front passenger seat condition	ON Indicator	OFF Indicator
Adult is seated.	ON	OFF
Child is seated.	OFF	ON
Vacant	OFF	OFF
Occupant classification system failure.	OFF	ON

INSPECTION PROCEDURE

1 CHECK SRS WARNING LIGHT

(a) Turn the ignition switch on (IG), and check the SRS warning light condition.
HINT:
If this trouble occurs, the SRS warning light is off. If it is on, a DTC is output. Troubleshoot for the output DTC.
OK:
The SRS warning light does not come on.

NG → **Go to step 9**

OK

2 CHECK PASSENGER AIRBAG ON / OFF INDICATOR

(a) Turn the ignition switch on (IG).
(b) Check if the passenger airbag ON/OFF indicator correctly indicates the front passenger seat condition.

OK

Front passenger seat condition	ON Indicator	OFF Indicator
Adult is seated.	**ON**	**OFF**
Child is seated.	**OFF**	**ON**
Vacant	**OFF**	**OFF**
Occupant classification system failure.	**OFF**	**ON**

OK → **END**

NG

3 PERFORM ZERO POINT CALIBRATION

(a) Turn the ignition switch off.
(b) Connect the intelligent tester to the DLC3.

(c) Turn the ignition switch on (IG).
(d) Using the intelligent tester, perform "Zero point calibration" (See page RS-206).
OK:
The "COMPLETE" is displayed.

NG → **Go to step 5**

OK

4	PERFORM SENSITIVITY CHECK

(a) Using the intelligent tester, perform "Sensitivity check" (See page RS-206).
Standard value:
27 to 33 kg (59.52 to 72.75 lb)

NG → **Go to step 5**

OK

END

5	RETIGHTEN FRONT SEAT ASSEMBLY RH BOLT

(a) Turn the ignition switch off.
(b) Loosen the 4 installation bolts of the front seat assembly RH.
(c) Tighten the 4 installation bolts of the front seat assembly RH to the specified torque.
Torque: 37 N*m (380 kgf*cm, 27 ft.*lbf)

NG → **Go to step 8**

OK

6	PERFORM ZERO POINT CALIBRATION

(a) Connect the intelligent tester to the DLC3.
(b) Turn the ignition switch on (IG).
(c) Using the intelligent tester, perform "Zero point calibration" (See page RS-206).
OK:
The "COMPLETE" is displayed.

NG → **Go to step 8**

OK

7	PERFORM SENSITIVITY CHECK

(a) Using the intelligent tester, perform "Sensitivity check" (See page RS-206).
Standard value:
27 to 33 kg (59.52 to 72.75 lb)

NG → **Go to step 8**

OK ↓

8	CHECK CONNECTORS

(a) Turn the ignition switch off.
(b) Disconnect the negative (-) terminal cable from the battery.
(c) Check the connectors are properly connected to the occupant classification ECU and the 4 occupant classification sensors.
OK:
The connectors are connected.
(d) Disconnect the connectors from the occupant classification ECU and the 4 occupant classification sensors.
(e) Check the connectors are not damaged or deformed.
OK:
The connectors are normal.

NG → **REPAIR OR REPLACE CONNECTOR, THEN GO TO STEP 1**

OK ↓

9	CHECK DTC

(a) Connect the connectors to the occupant classification ECU and the 4 occupant classification sensors.
(b) Connect the negative (-) terminal cable to the battery.
(c) Turn the ignition switch on (IG), and wait for at least 60 seconds.
(d) Clear the DTCs stored in the center airbag sensor assembly (See page RS-34).
(e) Clear the DTCs stored in the occupant classification ECU (See page RS-215).
(f) Turn the ignition switch off.
(g) Turn the ignition switch on (IG), and wait for at least 60 seconds.
(h) Check the DTCs (See page RS-215).
OK:
DTC is not output.

NG → **REPLACE CENTER AIRBAG SENSOR ASSEMBLY**

OK

10	REPLACE OCCUPANT CLASSIFICATION ECU

(a) Turn the ignition switch off.
(b) Disconnect the negative (-) terminal cable from the battery.
(c) Replace the occupant classification ECU (See page RS-371).
HINT:
Perform the inspection using parts from a normal vehicle if possible.

NEXT

11	PERFORM ZERO POINT CALIBRATION

(a) Connect the negative (-) terminal cable to the battery.
(b) Connect the intelligent tester to the DLC3.
(c) Turn the ignition switch on (IG).
(d) Using the intelligent tester, perform "Zero point calibration" (See page RS-206).
OK:
The "COMPLETE" is displayed.

NEXT

12	PERFORM SENSITIVITY CHECK

(a) Using the intelligent tester, perform "Sensitivity check" (See page RS-206).
Standard value:
27 to 33 kg (59.52 to 72.75 lb)

NEXT

END

REMOVAL

1. **PRECAUTION**
   CAUTION:
   Be sure to read the "PRECAUTION" thoroughly before servicing (See page RS-1).

2. **DISCONNECT CABLE FROM NEGATIVE BATTERY TERMINAL**
   CAUTION:
   Wait for 90 seconds after disconnecting the cable to prevent the airbag working.

3. **REMOVE STEERING WHEEL COVER LOWER NO.3**
   (a) Using a screwdriver, remove the steering wheel cover lower No.3.
   HINT:
   Tape up the screwdriver tip before use.

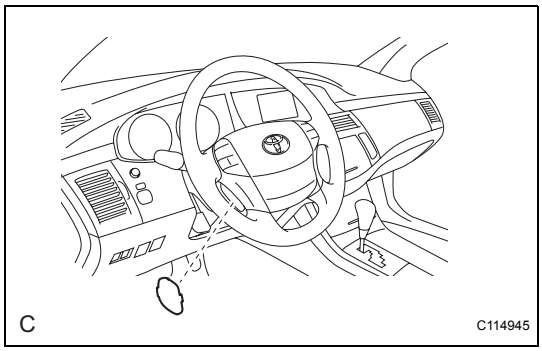

4. **REMOVE STEERING WHEEL COVER LOWER NO.2**
   (a) Using a screwdriver, remove the steering wheel cover lower No.2.
   HINT:
   Tape up the screwdriver tip before use.

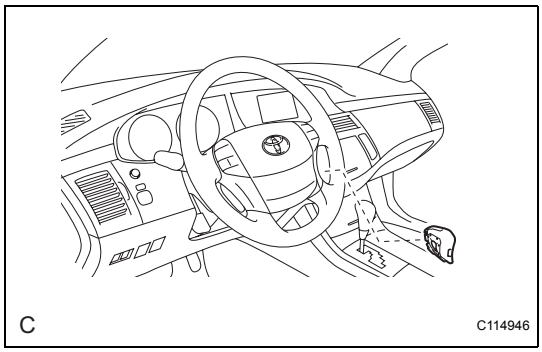

5. **REMOVE STEERING PAD**
   (a) Using a "torx" socket wrench (T30), loosen the 2 "torx" screws until the groove along the screw circumference catches on the screw case.

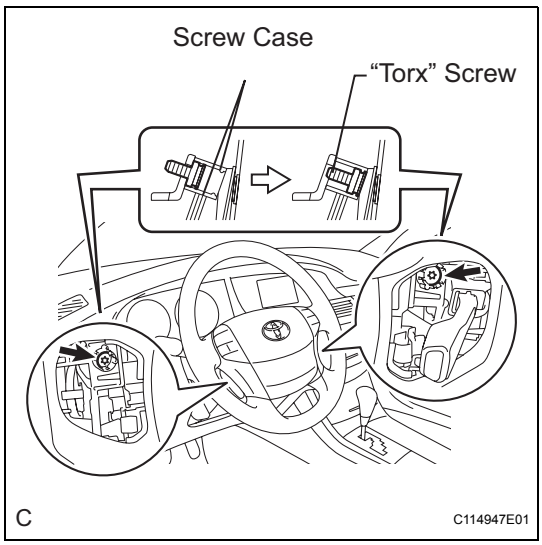

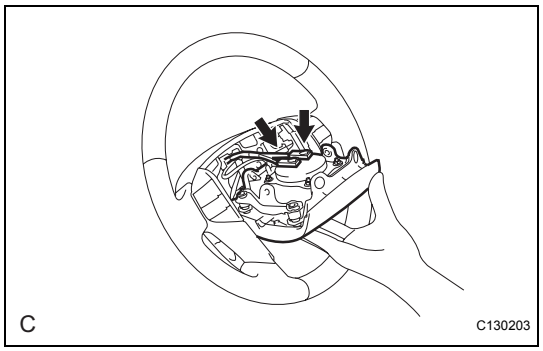

(b) Pull out the steering pad from the steering wheel assembly and support the steering pad with one hand as shown in the illustration.
NOTICE:
When removing the steering pad, do not pull the airbag wire harness.
(c) Disconnect the horn connector.
(d) Disconnect the 2 connectors from the steering pad.
NOTICE:
When handling the airbag connector, take care not to damage the airbag wire harness.
(e) Remove the steering pad.

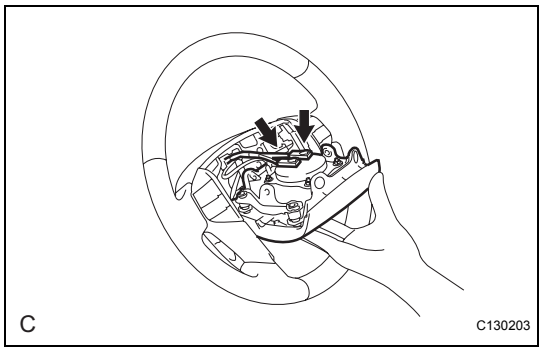

INSTALLATION

1. INSTALL STEERING PAD

(a) Support the steering pad with one hand as shown in the illustration.
(b) Connect the 2 connectors to the steering pad.
NOTICE:
When handling the airbag connector, take care not to damage the airbag wire harness.
(c) Connect the horn connector.
(d) Confirm that the circumference groove of the "torx" screw fits in the screw case, and place the steering pad onto the steering wheel assembly.
(e) Using a "torx" socket wrench (T30), tighten the 2 "torx" screws.
Torque: 8.8 N*m (90 kgf*cm, 78 in.*lbf)

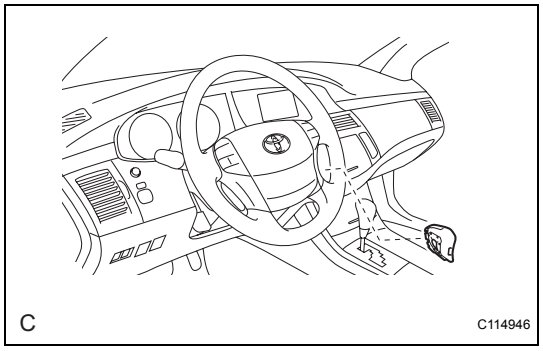

2. INSTALL STEERING WHEEL COVER LOWER NO.2

(a) Install the steering wheel cover lower No.2.

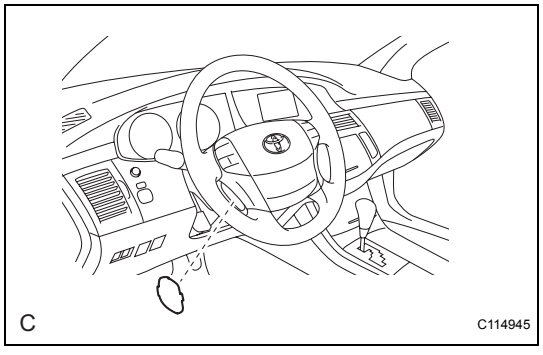

3. INSTALL STEERING WHEEL COVER LOWER NO.3

(a) Install the steering wheel cover lower No.3.

4. CONNECT CABLE TO NEGATIVE BATTERY TERMINAL

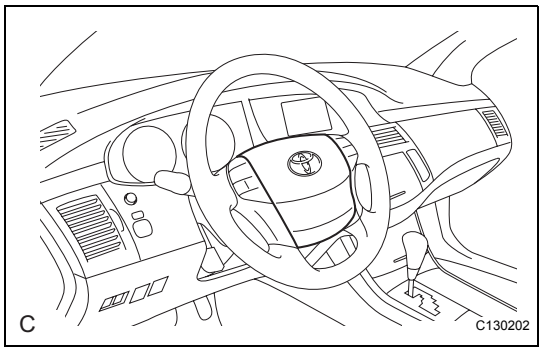

5. INSPECT STEERING PAD

(a) With the steering pad installed on the vehicle, perform a visual check. If there are any defects as mentioned below, replace the steering pad with a new one:
Cuts, minute cracks or marked discoloration on the steering pad top surface or in the grooved portion.

(b) Make sure that the horn sounds.
HINT:
If the horn does not sound, inspect the horn system (See page HO-3).

6. PERFORM INITIALIZATION

(a) Perform initialization (See page IN-29).
HINT:
Some systems need initialization when disconnecting the cable from the negative battery terminal.

7. INSPECT SRS WARNING LIGHT

(a) Inspect the SRS warning light (See page RS-28).

DISPOSAL

HINT:
When scrapping a vehicle equipped with the SRS or disposing of the steering pad, be sure to deploy the airbag first in accordance with the procedure described below. If any abnormality occurs with the airbag deployment, contact the SERVICE DEPT. of TOYOTA MOTOR SALES, U.S.A., INC.

CAUTION:

- **Never dispose of a steering pad that has an undeployed airbag.**
- **The airbag produces an exploding sound when it is deployed, so perform the operation outdoors and where it will not create a nuisance to nearby residents.**
- **When deploying the airbag, always use the specified SST (SRS Airbag Deployment Tool). Perform the operation in a place away from electrical noise.**
- **When deploying the airbag, perform the operation at least 10 m (33 ft) away from the steering pad.**
- **The steering pad becomes extremely hot when the airbag is deployed, so do not touch it for at least 30 minutes after deployment.**
- **Use gloves and safety glasses when handling a steering pad with a deployed airbag.**
- **Do not apply water, etc. to a steering pad with a deployed airbag.**
- **Always wash your hands with water after completing the operation.**

1. DISPOSE OF STEERING PAD (WHEN INSTALLED IN VEHICLE)

HINT:
Prepare a battery as the power source to deploy the airbag.

(a) Check the function of the SST.
SST 09082-00700
CAUTION:
When deploying the airbag, always use the specified SST:
SRS Airbag Deployment Tool

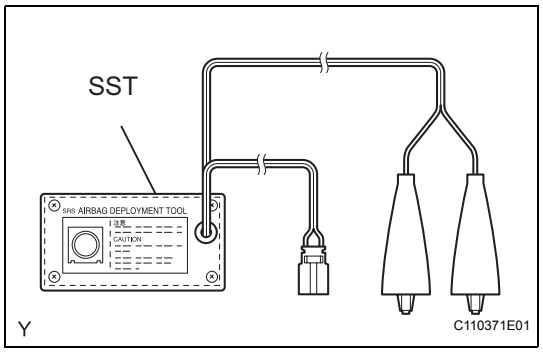

(1) Connect the SST to the battery.
Connect the red clip of the SST to the battery positive (+) terminal and the black clip of the SST to the negative (-) terminal.

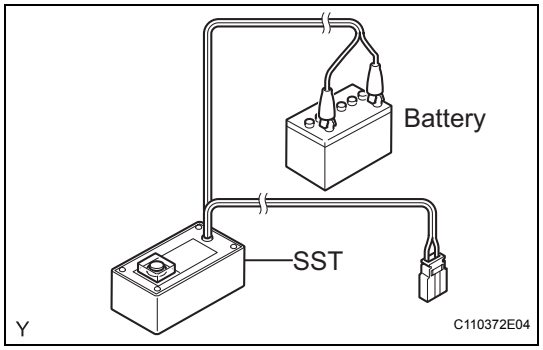

RS

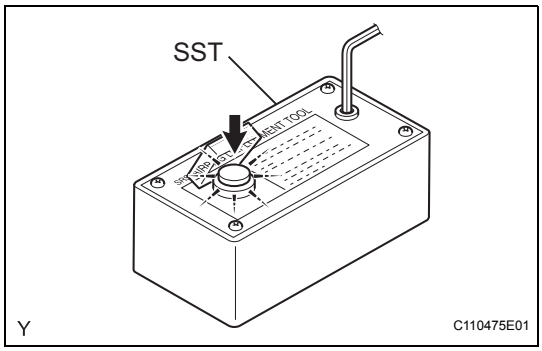

(2) Check the function of the SST.
Press the SST activation switch, and check that the LED of the SST activation switch comes on.
CAUTION:
- **Do not connect the SST connector (yellow colored one) to the airbag.**
- **If the LED comes on when the activation switch is not being pressed, SST malfunction is possible, so replace the SST with a new one.**

(3) Disconnect the SST from the battery.

(b) Precaution (See page RS-1).

(c) Disconnect the cable from the negative battery terminal.
CAUTION:
Wait for 90 seconds after disconnecting the cable to prevent the airbag working.

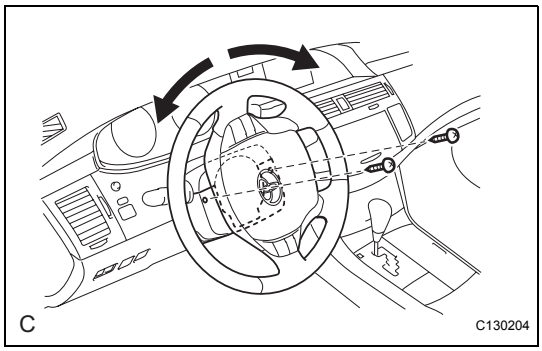

(d) Remove the steering column cover lower.
(1) While turning the steering wheel assembly to the right and left, remove the 2 screws and steering column cover lower.

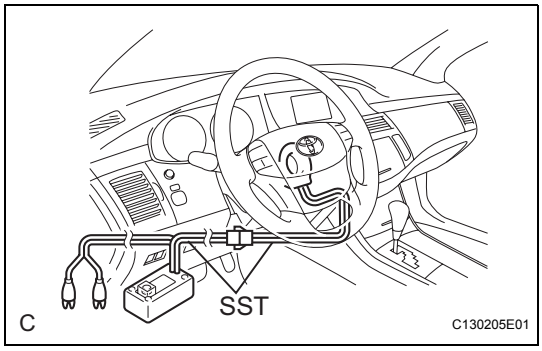

(e) Install the SST.
CAUTION:
Check that there is no looseness in the steering wheel assembly and steering pad.
(1) Disconnect the airbag connector (yellow colored one) from the spiral cable.
NOTICE:
When handling the airbag connector, take care not to damage the airbag wire harness.
(2) Connect the SST connector to the airbag connector of the spiral cable.
SST 09082-00700, 09082-00780
NOTICE:
To avoid damaging the SST connector and wire harness, do not lock the secondary lock of the twin lock.

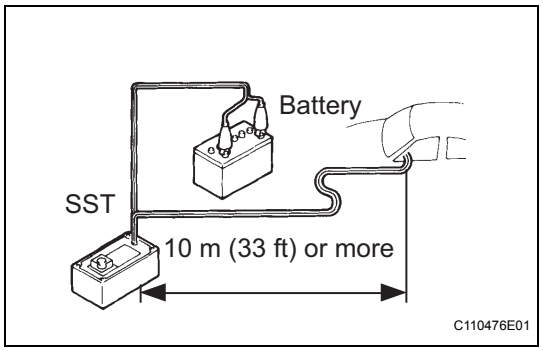

(3) Move the SST at least 10 m (33 ft) away from the vehicle front side window.
(4) Maintaining enough clearance for the SST wire harness in the front side window, close all doors and windows of the vehicle.
NOTICE:
Take care not to damage the SST wire harness.
(5) Connect the red clip of the SST to the battery positive (+) terminal and the black clip of the SST to the negative (-) terminal.

(f) Deploy the airbag.
(1) Check that no one is inside the vehicle or within a 10 m (33 ft) radius of the vehicle.
(2) Press the SST activation switch and deploy the airbag.
CAUTION:
- **When deploying the airbag, make sure that no one is near the vehicle.**
- **The steering pad becomes extremely hot when the airbag is deployed, so do not touch it for at least 30 minutes after deployment.**
- **Use gloves and safety glasses when handling a steering pad with a deployed airbag.**
- **Do not apply water, etc. to a steering pad with a deployed airbag.**
- **Always wash your hands with water after completing the operation.**

HINT:
The airbag is deployed as the LED of the SST activation switch comes on.

2. DISPOSE OF STEERING PAD (WHEN NOT INSTALLED IN VEHICLE)
NOTICE:
- **When disposing of the steering pad, never use the customer's vehicle to deploy the airbag.**
- **Be sure to follow the procedure detailed below when deploying the airbag.**

HINT:
Prepare a battery as the power source to deploy the airbag.

(a) Check the function of the SST.
SST 09082-00700
CAUTION:
When deploying the airbag, always use the specified SST:
SRS Airbag Deployment Tool

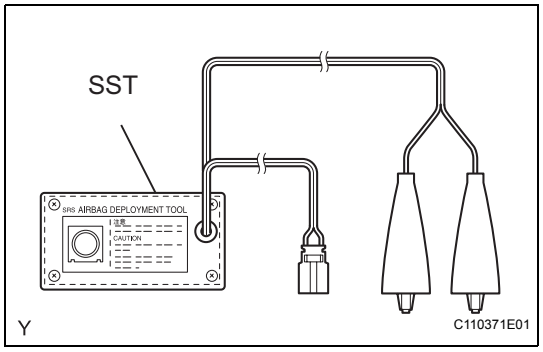

RS

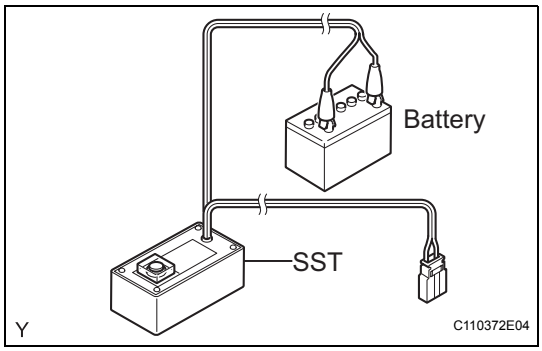

(1) Connect the SST to the battery.
Connect the red clip of the SST to the battery positive (+) terminal and the black clip of the SST to the negative (-) terminal.

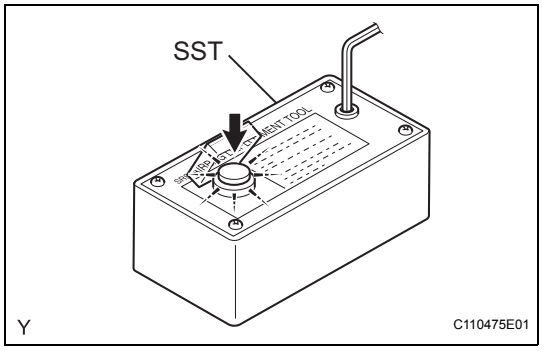

(2) Check the function of the SST.
Press the SST activation switch, and check that the LED of the SST activation switch comes on.
CAUTION:
- **Do not connect the SST connector (yellow colored one) to the airbag.**
- **If the LED comes on when the activation switch is not being pressed, SST malfunction is possible, so replace the SST with a new one.**

(3) Disconnect the SST from the battery.

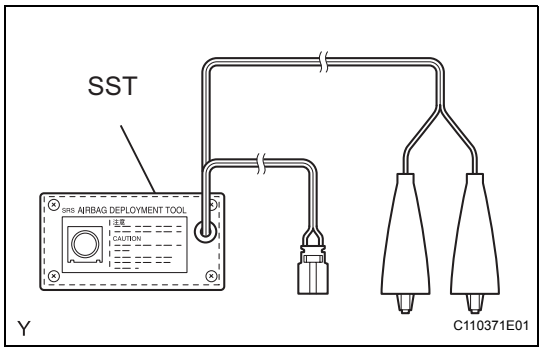

(b) Remove the steering pad (See page RS-303).
CAUTION:
- **When removing the steering pad, work must be started 90 seconds after the ignition switch is turned off and the negative (-) terminal cable is disconnected from the battery.**
- **When storing the steering pad, keep the airbag deployment side facing upward.**

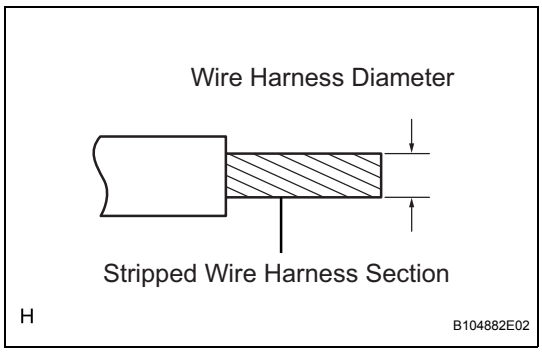

(c) Using a service-purpose wire harness for the vehicle, tie down the steering pad to the disc wheel.
Wire harness:
Stripped wire harness section
1.25 mm^2 or more (0.0019 $in.^2$ or more)
CAUTION:
If the wire harness is too thin or an alternative object is used to tie down the steering pad, it may be snapped by the shock when the airbag is deployed. Always use a wire harness for vehicle use with an area of at least 1.25 mm^2 (0.0019 $in.^2$).
HINT:
To calculate the area of the stripped wire harness section:
Area = 3.14 x $(Diameter)^2$ divided by 4

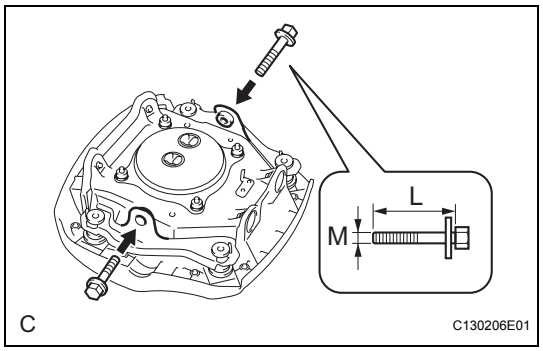

(1) Install the 2 bolts with washers into the 2 bolt holes on the steering pad.

Bolt:

L:

35.0 mm (1.378 in.)

M:

6.0 mm (0.236 in.)

Pitch:

1.0 mm (0.039 in.)

NOTICE:

- **Tighten the bolts by hand until they become difficult to turn.**
- **Do not tighten the bolts excessively.**

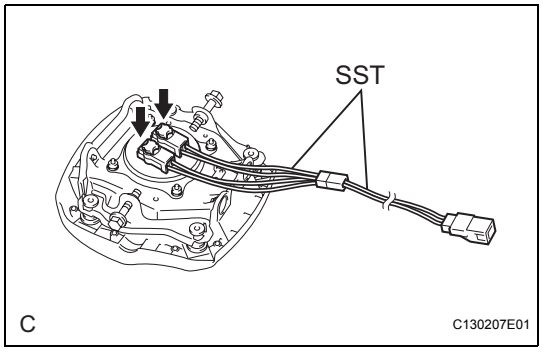

(2) After connecting the SST below to each other, connect them to the steering pad.

SST 09082-00802 (09082-10801, 09082-30801)

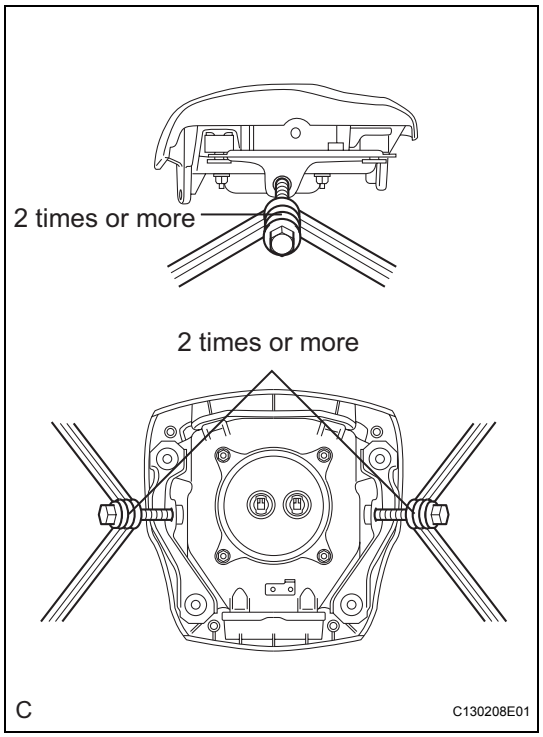

(3) Using 3 wire harnesses, wind wire harness at least 2 times each around each of the bolts installed on the left and right sides of the steering pad.

CAUTION:

- **Tightly wind the wire harness around the bolts so that there is no slack.**
- **Make sure that the wire harness is tight. If there is slack in the wire harness, the steering pad may become loose due to the shock when the airbag is deployed.**

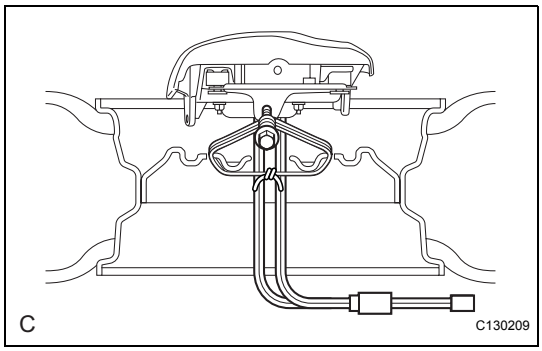

(4) Face the airbag deployment side of the steering pad upward on top of a tire and wheel set. Separately tie the left and right sides of the steering pad to the disc wheel through the hub nut holes. Position the SST connector so that it hangs downward through the hub hole of the disc wheel.

CAUTION:

- **Make sure that the wire harness is tight. If there is slack in the wire harness, the steering pad may become loose due to the shock when the airbag is deployed.**
- **Always tie down the steering pad with the airbag deployment side facing upward.**

NOTICE:

The disc wheel will be damaged by the airbag deployment, so use an extra disc wheel.

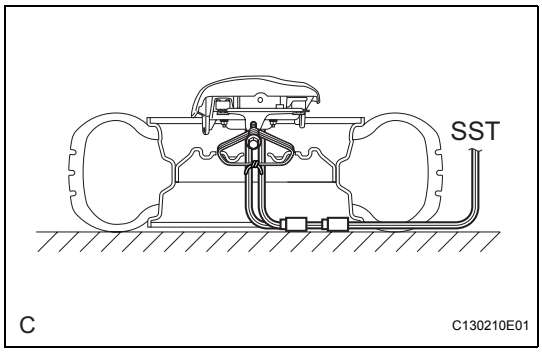

(d) Install the SST.

CAUTION:

Place the disc wheel on level ground.

(1) Connect the SST connector.

SST 09082-00700

NOTICE:

To avoid damaging the SST connector and wire harness, do not lock the secondary lock of the twin lock. Also, secure some slack for the SST wire harness inside the disc wheel.

(2) Move the SST at least 10 m (33 ft) away from the airbag tied down to the tire.

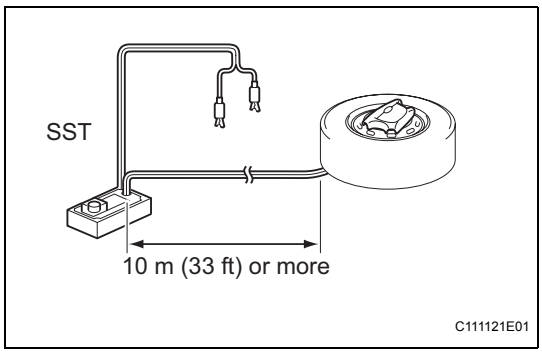

(e) Cover the steering pad (Using a cardboard box).

(1) Cover the steering pad with the cardboard box.

(2) Place weights on the cardboard box in 4 places totalling at least 190 N (19 kg, 43 lb).

Cardboard box size:

Must exceed the following dimensions

X:

460 mm (18.11 in.)

Y:

650 mm (25.59 in.)

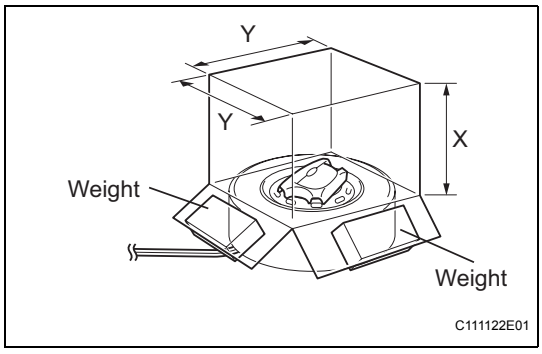

NOTICE:

- **When the dimension Y of the cardboard box exceeds the diameter of the disc wheel with tire which the steering pad is tied to, X should be the following size. X = 460 mm (18.11 in.) + width of tire**
- **If a cardboard box which is smaller than the specified size is used, the cardboard box will be broken by the shock from the airbag deployment.**

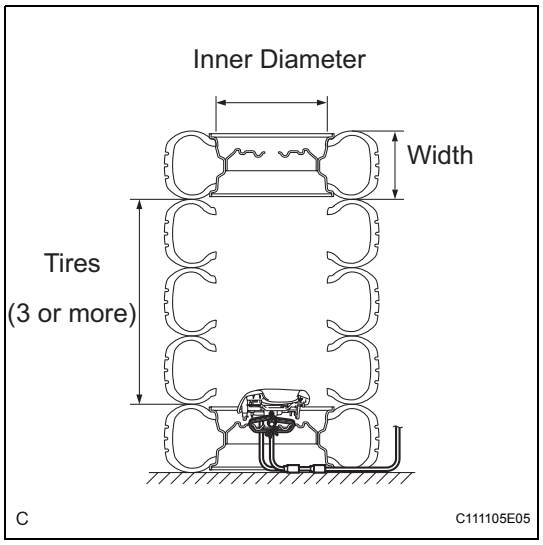

(f) Cover the steering pad (Using tires).

(1) Place at least 3 tires without disc wheels on the tire with disc wheel which the steering pad is tied to.

(2) Place the tire with a disc wheel on top of them.

Tire size:

Must exceed the following dimensions

Width:

185 mm (7.28 in.)

Inner diameter:

360 mm (14.17 in.)

CAUTION:

Do not use tires with disc wheels except for on the top and bottom.

NOTICE:

- **The tires may be damaged by the airbag deployment, so use an extra tire.**
- **Do not place the SST connector under the tire because it could be damaged.**

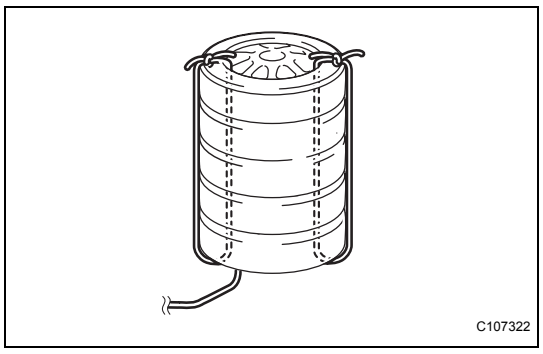

(3) Tie the tires together with 2 wire harnesses.

CAUTION:

Make sure that the wire harness is tight. Looseness in the wire harness results in the tires coming free due to the shock when the airbag is deployed.

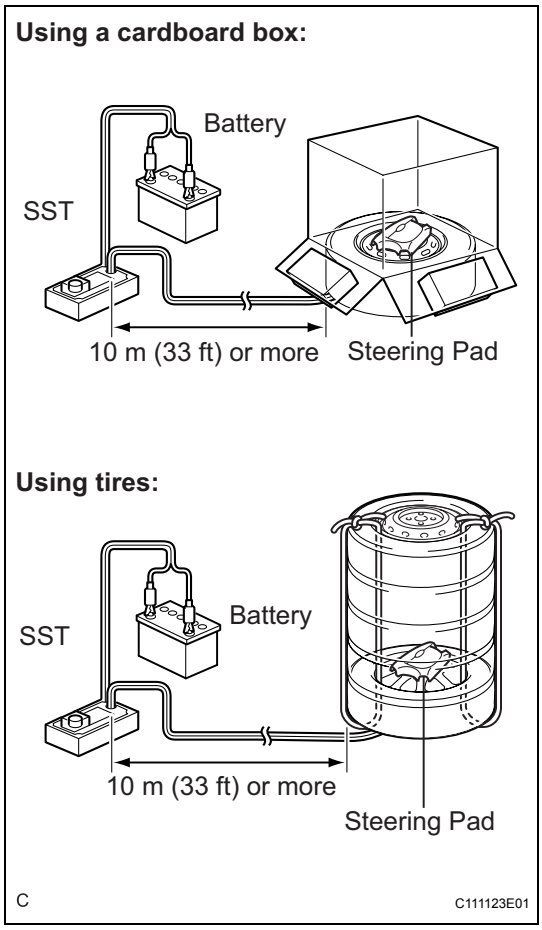

(g) Deploy the airbag.
(1) Connect the red clip of the SST to the battery positive (+) terminal and the black clip of the SST to the negative (-) terminal.
(2) Check that no one is within a 10 m (33 ft) radius of the disc wheel which the steering pad is tied to.
(3) Press the SST activation switch and deploy the airbag.
CAUTION:
When deploying the airbag, make sure that no one is near the tire.
HINT:
The airbag is deployed as the LED of the SST activation switch comes on.



(h) Dispose of the steering pad.
CAUTION:
- **The steering pad becomes extremely hot when the airbag is deployed, so do not touch it for at least 30 minutes after deployment.**
- **Use gloves and safety glasses when handling a steering pad with a deployed airbag.**
- **Do not apply water, etc. to a steering pad with a deployed airbag.**
- **Always wash your hands with water after completing the operation.**

(1) Remove the steering pad from the disc wheel.
(2) Place the steering pad in a plastic bag, tie it tightly and dispose of it as other general part disposal.

INSPECTION

1. INSPECT SPIRAL CABLE

(a) If there are any defects as mentioned below, replace the spiral cable with a new one:
Scratches, cracks, dents or chips on the connector or the spiral cable.

INSTALLATION

1. **INSTALL STEERING ANGLE SENSOR (w/ VSC) (See page BC-260)**

2. **INSTALL SPIRAL CABLE**
   (a) Check that the front wheels are facing straight ahead.
   (b) Set the turn signal switch to the neutral position.
   NOTICE:
   If it is not in the neutral position, the pin of the turn signal switch may snap.

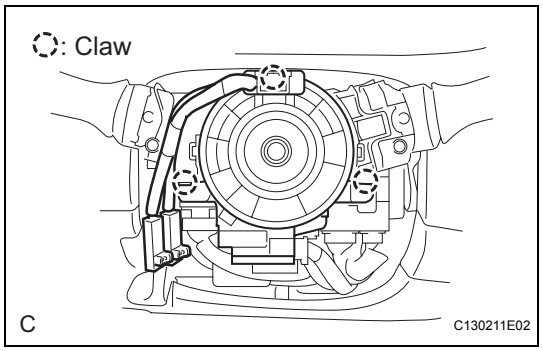

   (c) Install the spiral cable.
   NOTICE:
   When replacing the spiral cable with a new one, remove the lock pin before installing the steering wheel assembly.
   (d) Connect the connectors to the spiral cable.
   NOTICE:
   When handling the airbag connector, take care not to damage the airbag wire harness.

3. **INSTALL STEERING COLUMN COVER (See page SR-46)**

4. **INSTALL STEERING COLUMN COVER LOWER (See page SR-46)**

5. **ADJUST SPIRAL CABLE**
   (a) Check that the ignition switch is off.
   (b) Check that the battery negative (-) terminal is disconnected.
   CAUTION:
   After removing the terminal, wait for at least 90 seconds before starting the operation.

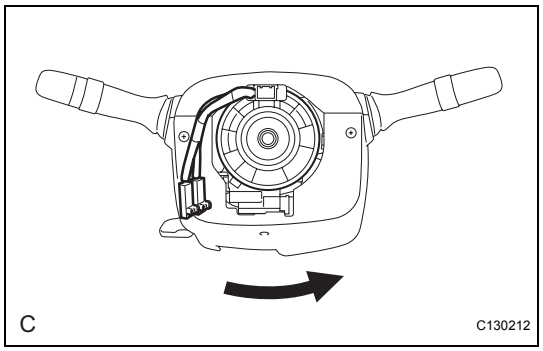

   (c) Rotate the spiral cable counterclockwise slowly by hand until it feels firm.
   NOTICE:
   Do not turn the spiral cable by the airbag wire harness.

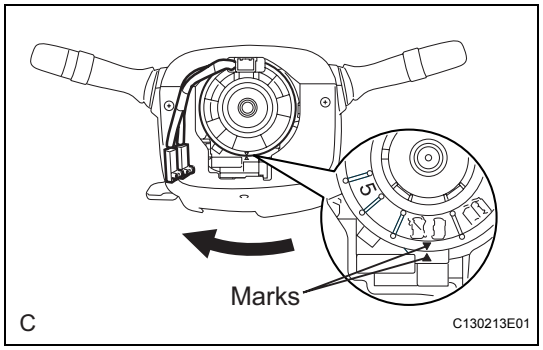

   (d) Rotate the spiral cable clockwise approximately 2.5 turns to align the marks.
   NOTICE:
   Do not turn the spiral cable by the airbag wire harness.
   HINT:
   The spiral cable will rotate approximately 2.5 turns to both the left and right from the center.

6. **INSTALL STEERING WHEEL ASSEMBLY (See page SR-46)**

7. **INSPECT STEERING WHEEL CENTER POINT**
8. **INSTALL STEERING PAD (See page RS-305)**
9. **INSTALL STEERING WHEEL COVER LOWER NO.2 (See page RS-305)**
10. **INSTALL STEERING WHEEL COVER LOWER NO.3 (See page RS-305)**
11. **CONNECT CABLE TO NEGATIVE BATTERY TERMINAL**
12. **INSPECT STEERING PAD (See page RS-305)**
13. **PERFORM INITIALIZATION**
    (a) Perform initialization (See page IN-29).
    HINT:
    Some systems need initialization when disconnecting the cable from the negative battery terminal.
14. **INSPECT SRS WARNING LIGHT**
    (a) Inspect the SRS warning light (See page RS-28).

REMOVAL

1. **PRECAUTION**
   CAUTION:
   Be sure to read the "PRECAUTION" thoroughly before servicing (See page RS-1).
2. **DISCONNECT CABLE FROM NEGATIVE BATTERY TERMINAL**
   CAUTION:
   Wait for 90 seconds after disconnecting the cable to prevent the airbag working.
3. **REMOVE FRONT DOOR SCUFF PLATE LH (See page IR-12)**
4. **REMOVE COWL SIDE TRIM SUB-ASSEMBLY LH (See page IR-12)**
5. **REMOVE FRONT DOOR OPENING TRIM WEATHERSTRIP LH**
6. **REMOVE INSTRUMENT PANEL FINISH LOWER PANEL LH (See page IP-12)**
7. **REMOVE DRIVER SIDE KNEE AIRBAG ASSEMBLY**
   (a) Remove the 4 bolts and the driver side knee airbag assembly.
   (b) Disconnect the connector from the driver side knee airbag assembly.
   NOTICE:
   When handling the airbag connector, take care not to damage the airbag wire harness.
8. **INSPECT DRIVER SIDE KNEE AIRBAG ASSEMBLY**

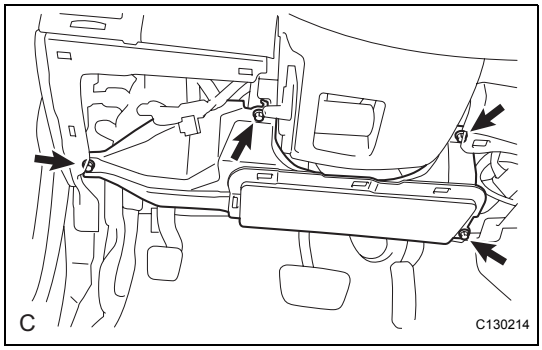

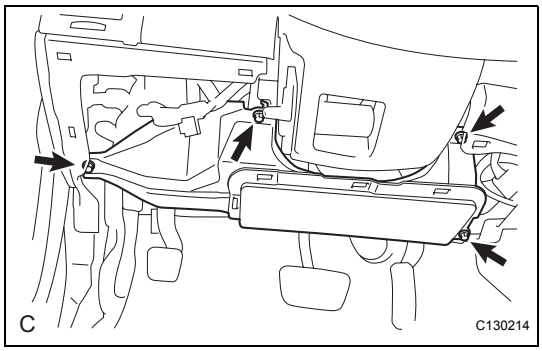

INSTALLATION

1. **INSTALL DRIVER SIDE KNEE AIRBAG ASSEMBLY**
   (a) Connect the connector to the driver side knee airbag assembly.
   NOTICE:
   When handling the airbag connector, take care not to damage the airbag wire harness.
   (b) Install the driver side knee airbag assembly with the 4 bolts.
   Torque: 10 N*m (102 kgf*cm, 7 ft.*lbf)
2. **INSTALL INSTRUMENT PANEL FINISH LOWER PANEL LH**
3. **INSTALL FRONT DOOR OPENING TRIM WEATHERSTRIP LH**
4. **INSTALL COWL SIDE TRIM SUB-ASSEMBLY LH**
5. **INSTALL FRONT DOOR SCUFF PLATE LH**
6. **CONNECT CABLE TO NEGATIVE BATTERY TERMINAL**

7. PERFORM INITIALIZATION

(a) Perform initialization (See page IN-29).
HINT:
Some systems need initialization when disconnecting the cable from the negative battery terminal.

8. INSPECT SRS WARNING LIGHT

(a) Inspect the SRS warning light (See page RS-28).

DISPOSAL

HINT:
When scrapping a vehicle equipped with the SRS or disposing of the driver side knee airbag assembly, be sure to deploy the airbag first in accordance with the procedure described below. If any abnormality occurs with the airbag deployment, contact the SERVICE DEPT. of TOYOTA MOTOR SALES, U.S.A., INC.

CAUTION:

- **Never dispose of a driver side knee airbag assembly that has an undeployed airbag.**
- **The airbag produces an exploding sound when it is deployed, so perform the operation outdoors and where it will not create a nuisance to nearby residents.**
- **When deploying the airbag, always use the specified SST (SRS Airbag Deployment Tool). Perform the operation in a place away from electrical noise.**
- **When deploying the airbag, perform the operation at least 10 m (33 ft) away from the driver side knee airbag assembly.**
- **The driver side knee airbag assembly becomes extremely hot when the airbag is deployed, so do not touch it for at least 30 minutes after deployment.**
- **Use gloves and safety glasses when handling a driver side knee airbag assembly with a deployed airbag.**
- **Do not apply water, etc. to a driver side knee airbag assembly with a deployed airbag.**
- **Always wash your hands with water after completing the operation.**

1. DISPOSE OF DRIVER SIDE KNEE AIRBAG ASSEMBLY (WHEN INSTALLED IN VEHICLE)

HINT:
Prepare a battery as the power source to deploy the airbag.

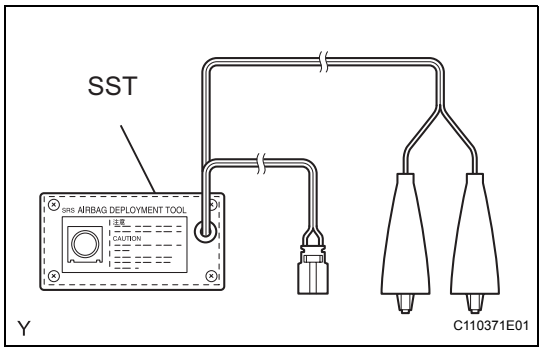

(a) Check the function of the SST (See page RS-306).
(b) Precaution (See page RS-1).
(c) Disconnect the cable from the negative battery terminal.
CAUTION:
Wait for 90 seconds after disconnecting the cable to prevent the airbag working.
(d) Remove the front door scuff plate LH (See page IR-12).
(e) Remove the cowl side trim sub-assembly LH (See page IR-12).
(f) Remove the front door weatherstrip LH (See page IR-12).
(g) Remove the instrument panel finish lower panel LH (See page IP-12).
(h) Remove the driver side knee airbag assembly (See page RS-320).

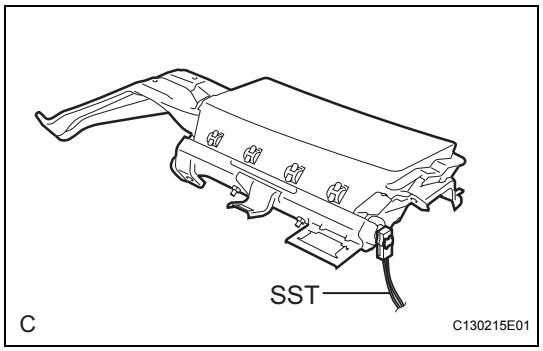

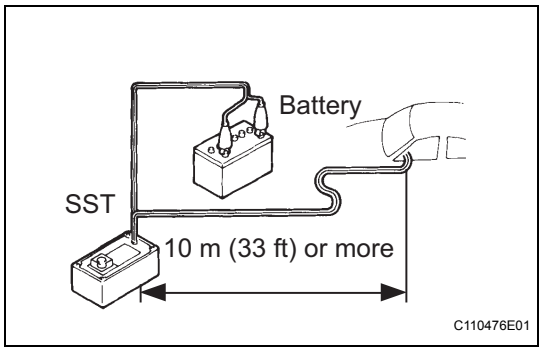

(i) Install the SST.
  (1) Connect the SST connector to the driver side knee airbag assembly.
  SST 09082-00700, 09082-00770
  NOTICE:
  To avoid damaging the SST connector and wire harness, do not lock the secondary lock of the twin lock.
  (2) Install the driver side knee airbag assembly.
  NOTICE:
  When handling the airbag connector, take care not to damage the airbag wire harness.
  (3) Move the SST at least 10 m (33 ft) away from the vehicle front side window.
  (4) Maintaining enough clearance for the SST wire harness in the front side window, close all doors and windows of the vehicle.
  NOTICE:
  Take care not to damage the SST wire harness.
  (5) Connect the red clip of the SST to the battery positive (+) terminal and the black clip of the SST to the negative (-) terminal.

(j) Deploy the airbag.
  (1) Check that no one is inside the vehicle or within a 10 m (33 ft) radius of the vehicle.
  (2) Press the SST activation switch and deploy the airbag.
  CAUTION:
  - **When deploying the airbag, make sure that no one is near the vehicle.**
  - **The driver side knee airbag assembly becomes extremely hot when the airbag is deployed, so do not touch it for at least 30 minutes after deployment.**
  - **Use gloves and safety glasses when handling a driver side knee airbag assembly with a deployed airbag.**
  - **Do not apply water, etc. to a driver side knee airbag assembly with a deployed airbag.**
  - **Always wash your hands with water after completing the operation.**

  HINT:
  The airbag is deployed as the LED of the SST activation switch comes on.

2. DISPOSE OF DRIVER SIDE KNEE AIRBAG ASSEMBLY (WHEN NOT INSTALLED IN VEHICLE)
NOTICE:
- **When disposing of the driver side knee airbag assembly, never use the customer's vehicle to deploy the airbag.**
- **Be sure to follow the procedure detailed below when deploying the airbag.**

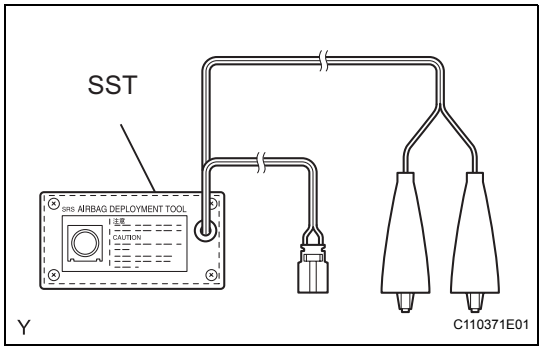

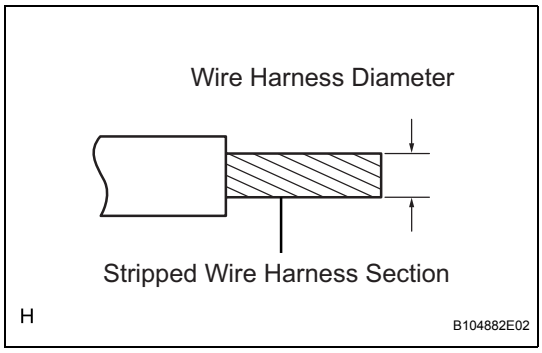

HINT:
Prepare a battery as the power source to deploy the airbag.

(a) Check the function of the SST (See page RS-306).

(b) Remove the driver side knee airbag assembly (See page RS-319).

CAUTION:

- **When removing the driver side knee airbag assembly, work must be started 90 seconds after the ignition switch is tuned off and the negative (-) terminal cable is disconnected from the battery.**
- **When storing the driver side knee airbag assembly, keep the airbag deployment side facing upward.**

(c) Using a service-purpose wire harness for the vehicle, tie down the driver side knee airbag assembly to the tire.

Wire harness:

Stripped wire harness section

1.25 mm^2 or more (0.0019 $in.^2$ or more)

CAUTION:

If the wire harness is too thin or an alternative object is used to tie down the driver side knee airbag assembly, it may be snapped by the shock when the airbag is deployed. Always use a wire harness for vehicle use with an area of at least 1.25 mm^2 (0.0019 $in.^2$).

HINT:
To calculate the area of the stripped wire harness section:

Area = 3.14 x $(Diameter)^2$ divided by 4

(1) Position the driver side knee airbag assembly inside the tire with the airbag deployment side facing inside.

Tire size:

Must exceed the following dimensions

Width:

185 mm (7.28 in.)

Inner diameter:

360 mm (14.17 in.)

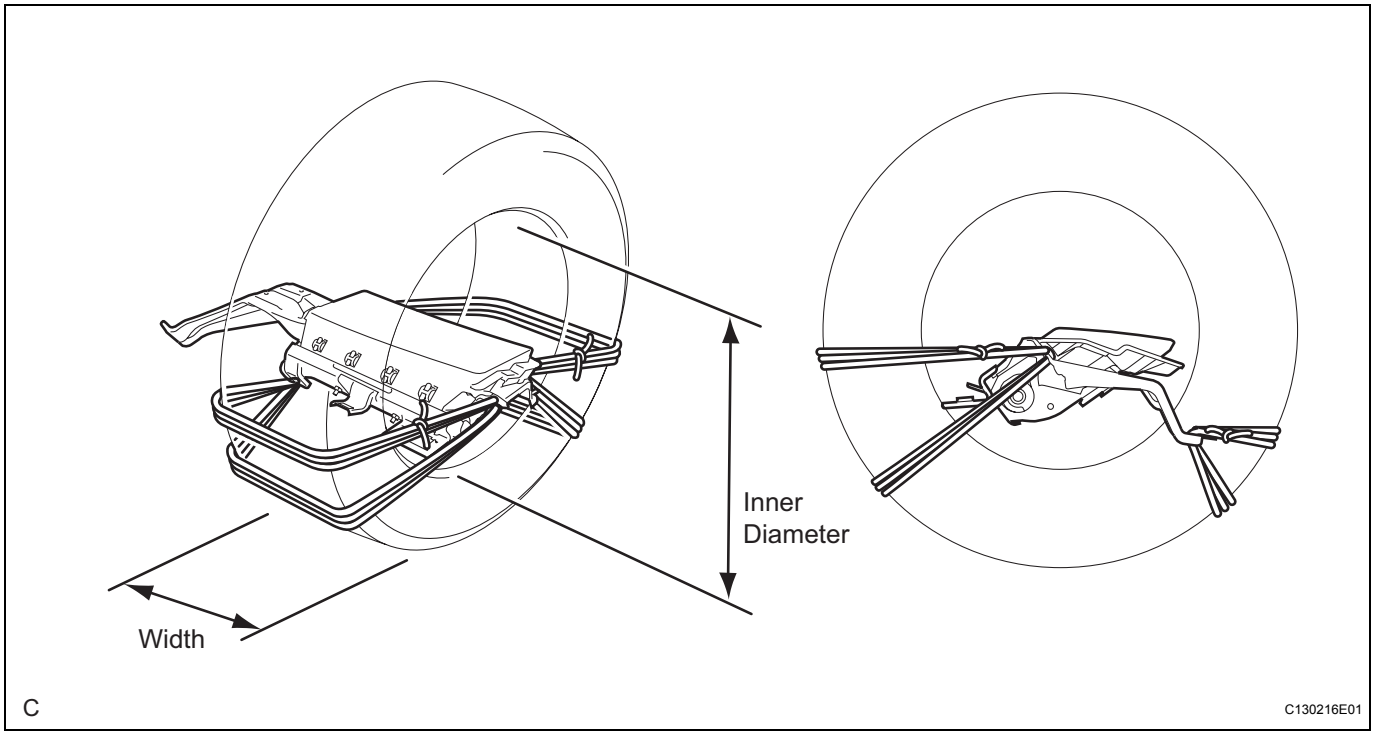

CAUTION:
- **Make sure that the wire harness is tight. If there is slack in the wire harness, the driver side knee airbag assembly may become loose due to the shock when the airbag is deployed.**
- **Always tie down the driver side knee airbag assembly with the airbag deployment side facing inside the tire.**

NOTICE:
The tire will be damaged by the airbag deployment, so use an extra tire.

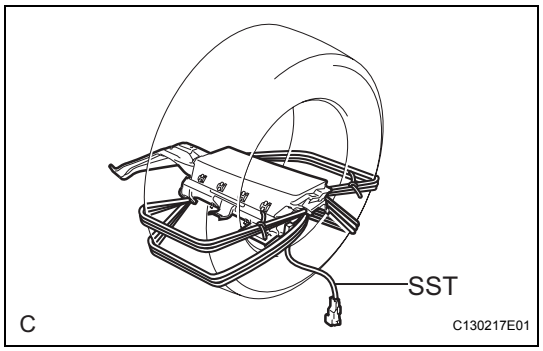

(d) Install the SST.
  (1) Connect the SST connector to the driver side knee airbag assembly.
  SST 09082-00770

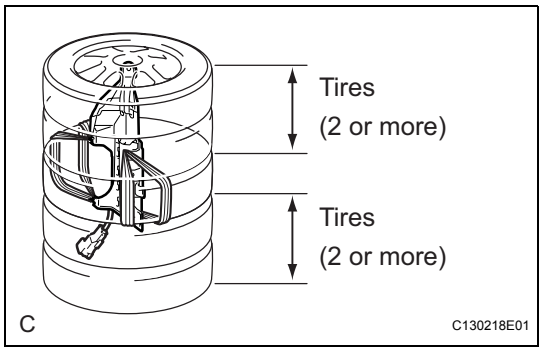

(e) Place the tires.
(1) Place at least 2 tires under the tire which the driver side knee airbag assembly is tied to.
(2) Place at least 2 tires over the tire which the driver side knee airbag assembly is tied to. The top tire should have a disc wheel installed.
NOTICE:
Do not place the SST connector under the tire because it could be damaged.

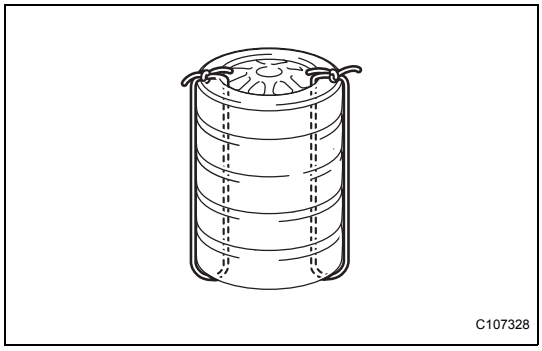

(3) Tie the tires together with 2 wire harnesses.
CAUTION:
Make sure that the wire harness is tight. Looseness in the wire harness results in the tires coming free due to the shock when the airbag is deployed.

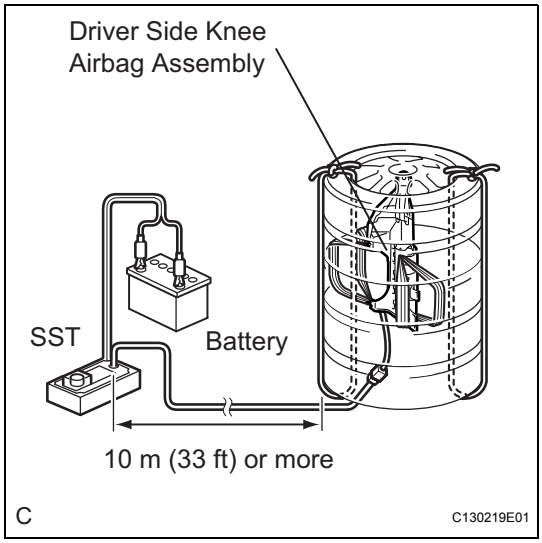

(f) Install the SST.
(1) Connect the SST connector.
SST 09082-00700
NOTICE:
To avoid damaging the SST connector and wire harness, do not lock the secondary lock of the twin lock. Also, secure some slack for the SST wire harness inside the tire.
(2) Move the SST at least 10 m (33 ft) away from the airbag tied down to the tires.
(g) Deploy the airbag.
(1) Connect the red clip of the SST to the battery positive (+) terminal and the black clip of the SST to the negative (-) terminal.
(2) Check that no one is within a 10 m (33 ft) radius of the tire which the driver side knee airbag assembly is tied to.
(3) Press the SST activation switch and deploy the airbag.
CAUTION:
When deploying the airbag, make sure that no one is near the tire.
HINT:
The airbag is deployed as the LED of the SST activation switch comes on.

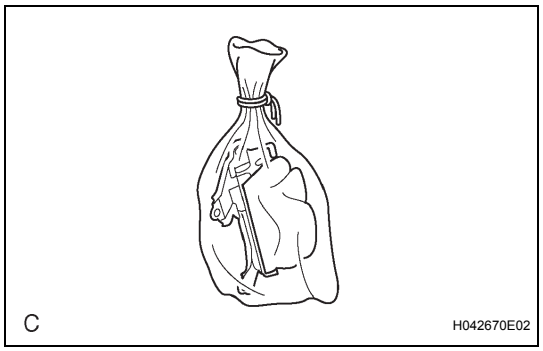

(h) Dispose of the driver side knee airbag assembly.
CAUTION:
- **The driver side knee airbag assembly becomes extremely hot when the airbag is deployed, so do not touch it for at least 30 minutes after deployment.**
- **Use gloves and safety glasses when handling a driver side knee airbag assembly with a deployed airbag.**
- **Do not apply water, etc. to a driver side knee airbag assembly with a deployed airbag.**
- **Always wash your hands with water after completing the operation.**

(1) Remove the driver side knee airbag assembly from the tire.
(2) Place the driver side knee airbag assembly in a plastic bag, tie it tightly and dispose of it as other general part disposal.

REMOVAL

1. **PRECAUTION**
   CAUTION:
   Be sure to read the "PRECAUTION" thoroughly before servicing (See page RS-1).

2. **DISCONNECT CABLE FROM NEGATIVE BATTERY TERMINAL**
   CAUTION:
   Wait for 90 seconds after disconnecting the cable to prevent the airbag working.

3. **REMOVE FRONT DOOR SCUFF PLATE RH (See page IR-12)**

4. **REMOVE COWL SIDE TRIM SUB-ASSEMBLY RH (See page IR-12)**

5. **REMOVE FRONT DOOR WEATHERSTRIP RH**

6. **REMOVE INSTRUMENT PANEL UNDER COVER SUB-ASSEMBLY NO.2 (See page IP-11)**

7. **REMOVE INSTRUMENT PANEL FINISH LOWER PANEL RH (See page IP-11)**

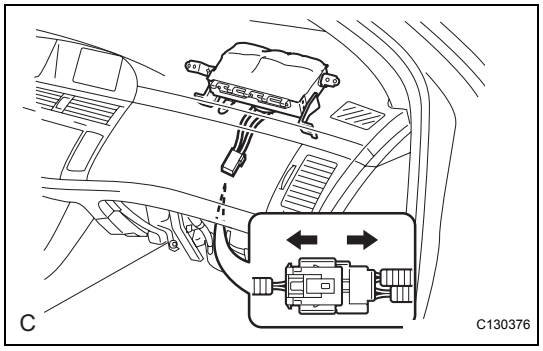

8. **DISCONNECT FRONT PASSENGER AIRBAG ASSEMBLY CONNECTOR**
   (a) Disconnect the connector.
   NOTICE:
   When handling the airbag connector, take care not to damage the airbag wire harness.

9. **REMOVE INSTRUMENT PANEL SAFETY PAD SUB-ASSEMBLY**
   HINT:
   Refer to the procedures up to "REMOVE INSTRUMENT PANEL SAFETY PAD SUB-ASSEMBLY" (See page IP-8).

10. **REMOVE SIDE DEFROSTER NOZZLE DUCT NO.2 (See page IP-16)**

11. **REMOVE HEATER TO REGISTER DUCT NO.3 (See page IP-16)**

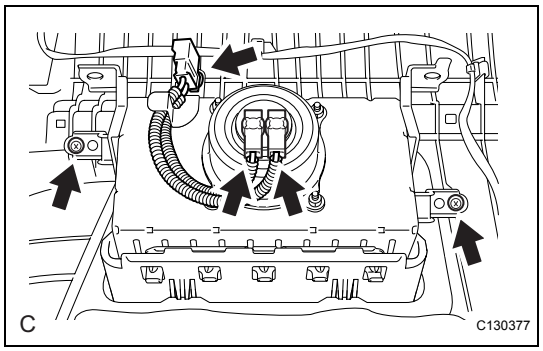

12. **REMOVE INSTRUMENT PANEL ASSEMBLY**
   (a) Remove the clip.
   (b) Disconnect the 2 connectors from the front passenger airbag assembly.
   NOTICE:
   When handling the airbag connector, take care not to damage the airbag wire harness.

13. **REMOVE FRONT PASSENGER AIRBAG ASSEMBLY**
   (a) Remove the 2 screws.

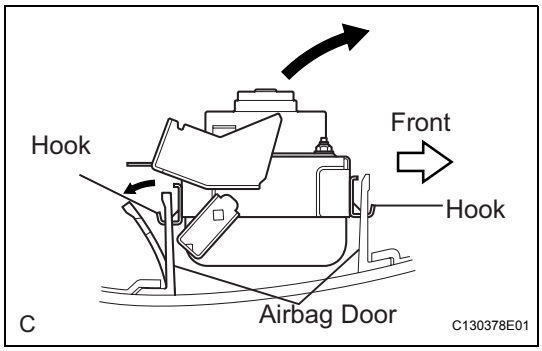

(b) Release the rear side airbag door from the hook by slightly deflecting it and roll the front passenger airbag assembly forward.
(c) Release the front side airbag door from the other hook and remove the front passenger airbag assembly.

14. INSPECT FRONT PASSENGER AIRBAG ASSEMBLY

INSTALLATION

1. **INSTALL FRONT PASSENGER AIRBAG ASSEMBLY**
2. **INSTALL INSTRUMENT PANEL WIRE ASSEMBLY**
   (a) Connect the 2 connectors to the front passenger airbag assembly.
   NOTICE:
   When handling the airbag connector, take care not to damage the airbag wire harness.
   (b) Install the clip.
3. **INSTALL HEATER TO REGISTER DUCT NO.3**
4. **INSTALL SIDE DEFROSTER NOZZLE DUCT NO.2**
5. **INSTALL INSTRUMENT PANEL SAFETY PAD SUB-ASSEMBLY**
   HINT:
   Refer to procedures from "INSTALL INSTRUMENT PANEL SAFETY PAD SUB-ASSEMBLY" (See page IP-17).

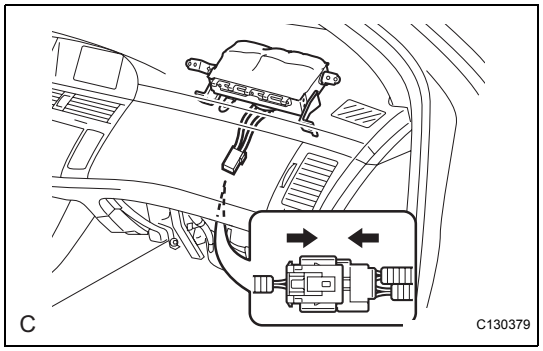

6. **CONNECT FRONT PASSENGER AIRBAG ASSEMBLY CONNECTOR**
   (a) Connect the connector.
   NOTICE:
   When handling the airbag connector, take care not to damage the airbag wire harness.
7. **INSTALL INSTRUMENT PANEL FINISH LOWER PANEL RH**
8. **INSTALL INSTRUMENT PANEL UNDER COVER SUB-ASSEMBLY NO.2**
9. **INSTALL FRONT DOOR WEATHERSTRIP RH**
10. **INSTALL COWL SIDE TRIM SUB-ASSEMBLY RH**
11. **INSTALL FRONT DOOR SCUFF PLATE RH**
12. **CONNECT CABLE TO NEGATIVE BATTERY TERMINAL**
13. **INSPECT STEERING PAD**
14. **PERFORM INITIALIZATION**
    (a) Perform initialization (See page IN-29).
    HINT:
    Some systems need initialization when disconnecting the cable from the negative battery terminal.
15. **INSPECT SRS WARNING LIGHT**
    (a) Inspect the SRS warning light (See page RS-28).

DISPOSAL

HINT:
When scrapping a vehicle equipped with the SRS or disposing of the front passenger airbag assembly, be sure to deploy the airbag first in accordance with the procedure described below. If any abnormality occurs with the airbag deployment, contact the SERVICE DEPT. of the TOYOTA MOTOR SALES, U.S.A., INC.

CAUTION:

- **Never dispose of a front passenger airbag assembly that has an undeployed airbag.**
- **The airbag produces an exploding sound when it is deployed, so perform the operation outdoors and where it will not create a nuisance to nearby residents.**
- **When deploying the airbag, always use the specified SST (SRS Airbag Deployment Tool). Perform the operation in a place away from electrical noise.**
- **When deploying the airbag, perform the operation at least 10 m (33 ft) away from the front passenger airbag assembly.**
- **The front passenger airbag assembly becomes extremely hot when the airbag is deployed, so do not touch it for at least 30 minutes after deployment.**
- **Use gloves and safety glasses when handling a front passenger airbag assembly with a deployed airbag.**
- **Do not apply water, etc. to a front passenger airbag assembly with a deployed airbag.**
- **Always wash your hands with water after completing the operation.**

1. DISPOSE OF FRONT PASSENGER AIRBAG ASSEMBLY (WHEN INSTALLED IN VEHICLE)

HINT:
Prepare a battery as the power source to deploy the airbag.

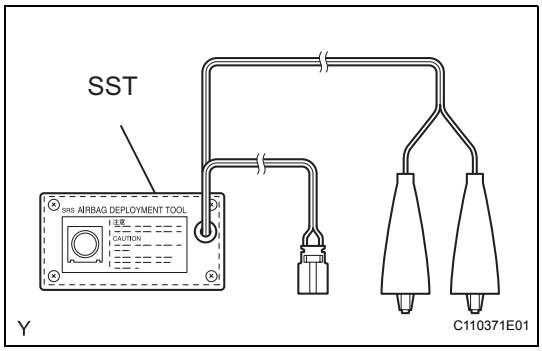

(a) Check the function of the SST (See page RS-306).
(b) Precaution (See page RS-1).
(c) Disconnect the cable from the negative battery terminal.
CAUTION:
Wait for 90 seconds after disconnecting the cable to prevent the airbag working.
(d) Remove the front door scuff plate RH (See page IR-12).
(e) Remove the cowl side trim sub-assembly RH (See page IR-12).
(f) Remove the front door weatherstrip RH (See page IR-12).
(g) Remove the instrument panel under cover sub-assembly (See page IP-11).
(h) Remove the instrument panel finish lower panel RH (See page IP-11).

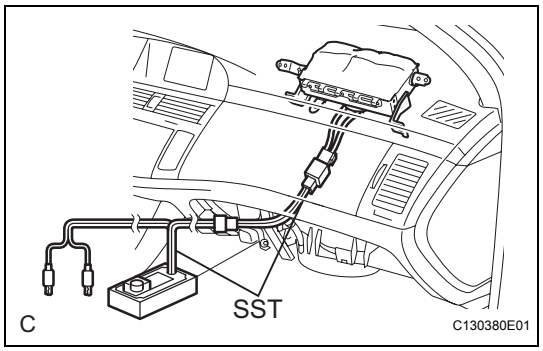

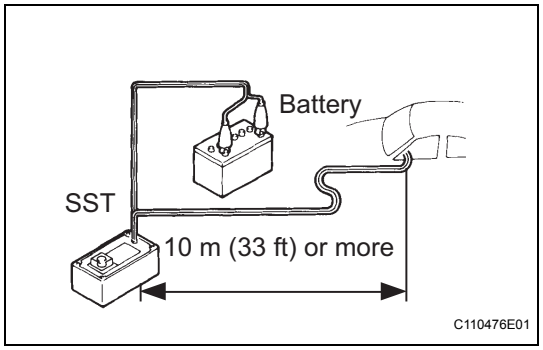

(i) Install the SST.
  (1) Disconnect the connector.
  NOTICE:
  When handling the airbag connector, take care not to damage the airbag wire harness.
  (2) Connect the SST connector to the instrument panel wire assembly.
  SST 09082-00700, 09082-00780
  NOTICE:
  To avoid damaging the SST connector and wire harness, do not lock the secondary lock of the twin lock.
  (3) Move the SST at least 10 m (33 ft) away from the vehicle front side window.
  (4) Maintaining enough clearance for the SST wire harness in the front side window, close all doors and windows of the vehicle.
  NOTICE:
  Take care not to damage the SST wire harness.
  (5) Connect the red clip of the SST to the battery positive (+) terminal and the black clip of the SST to the negative (-) terminal.

(j) Deploy the airbag.
  (1) Check that no one is inside the vehicle or within a 10 m (33 ft) radius of the vehicle.
  (2) Press the SST activation switch and deploy the airbag.
  CAUTION:
  - **When deploying the airbag, make sure that no one is near the vehicle.**
  - **The front passenger airbag assembly becomes extremely hot when the airbag is deployed, so do not touch it for at least 30 minutes after deployment.**
  - **Use gloves and safety glasses when handling a front passenger airbag assembly with a deployed airbag.**
  - **Do not apply water, etc. to a front passenger airbag assembly with a deployed airbag.**
  - **Always wash your hands with water after completing the operation.**

  HINT:
  The airbag is deployed as the LED of the SST activation switch comes on.

2. DISPOSE OF FRONT PASSENGER AIRBAG ASSEMBLY (WHEN NOT INSTALLED IN VEHICLE)
NOTICE:
- **When disposing of the front passenger airbag assembly, never use the customer's vehicle to deploy the airbag.**
- **Be sure to follow the procedure detailed below when deploying the airbag.**

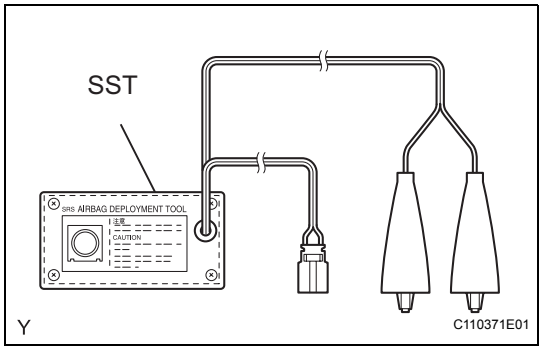

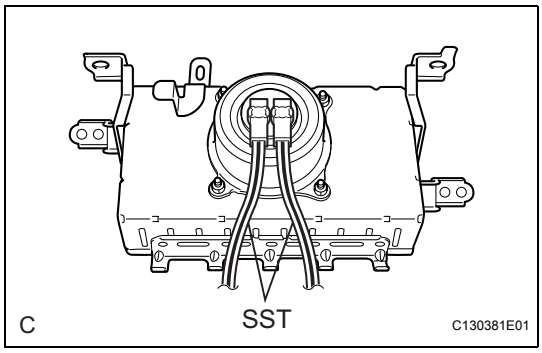

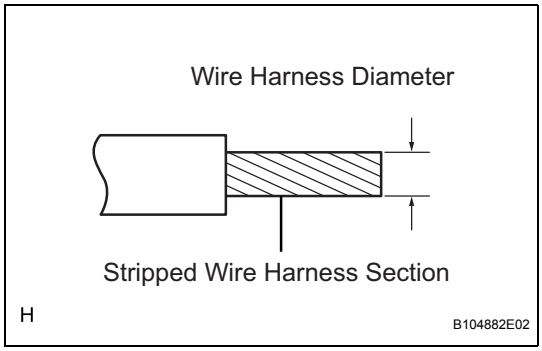

HINT:
Prepare a battery as the power source to deploy the airbag.

(a) Check the function of the SST (See page RS-306).

(b) Remove the front passenger airbag assembly (See page RS-328).

CAUTION:

- **When removing the front passenger airbag assembly, work must be started 90 seconds after the ignition switch is turned off and the negative (-) terminal cable is disconnected from the battery.**
- **When storing the front passenger airbag assembly, keep the airbag deployment side facing upward.**

(c) Install the SST.
After connecting the SST below to each other, connect them to the front passenger airbag assembly.
SST 09082-00802 (09082-10801, 09082-30801)

(d) Using a service-purpose wire harness for the vehicle, tie down the front passenger airbag assembly to the tire.
Wire harness:
Stripped wire harness section
1.25 mm^2 or more (0.0019 $in.^2$ or more)
CAUTION:
If the wire harness is too thin or an alternative object is used to tie down the front passenger airbag assembly, it may be snapped by the shock when the airbag is deployed. Always use a wire harness for vehicle use with an area of at least 1.25 mm^2 (0.0019 $in.^2$).
HINT:
To calculate the area of the stripped wire harness section:
Area = 3.14 x $(Diameter)^2$ divided by 4

(1) Position the front passenger airbag assembly inside the tire with the airbag deployment side facing inside.
Tire size:
Must exceed the following dimensions
Width:
185 mm (7.28 in.)
Inner diameter:
360 mm (14.17 in.)

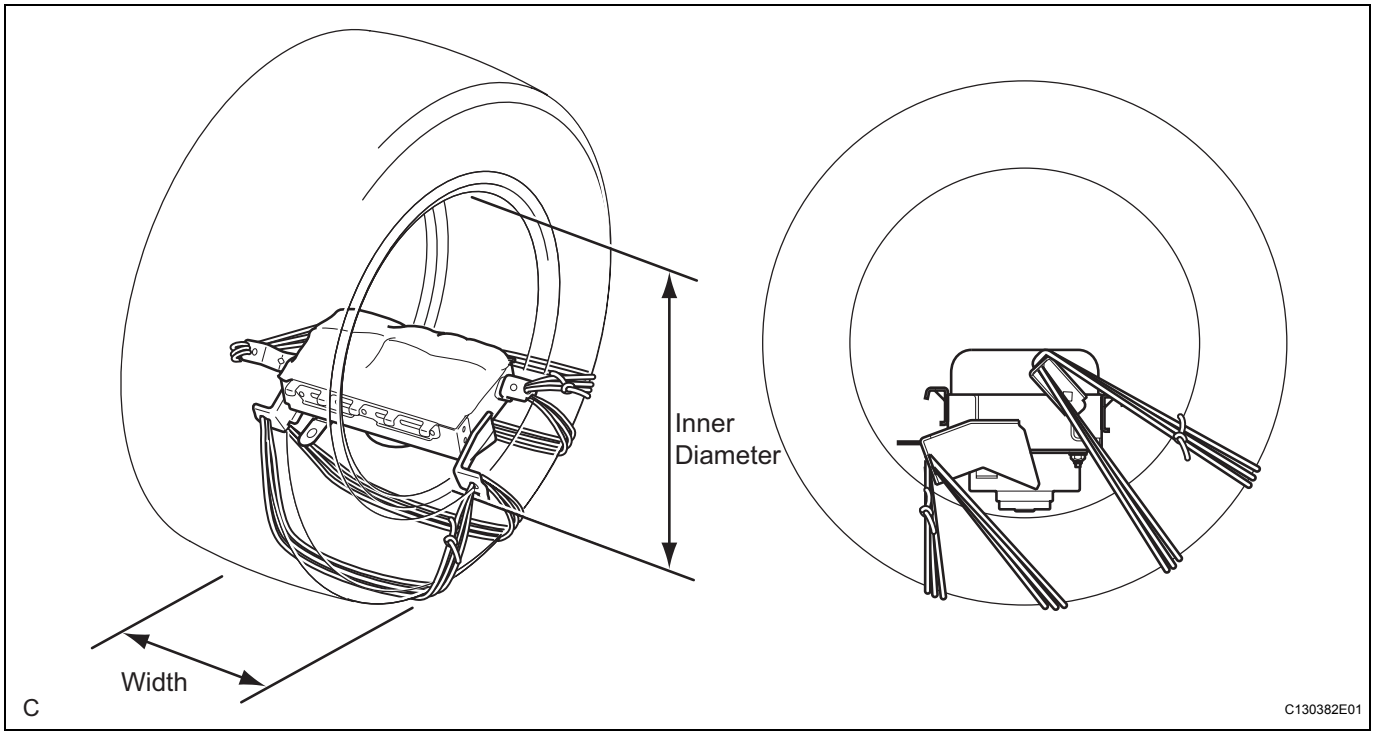

CAUTION:

- **Make sure that the wire harness is tight. If there is slack in the wire harness, the front passenger airbag assembly may become loose due to the shock when the airbag is deployed.**
- **Always tie down the front passenger airbag assembly with the airbag deployment side facing inside the tire.**

NOTICE:

The tire will be damaged by the airbag deployment, so use an extra tire.

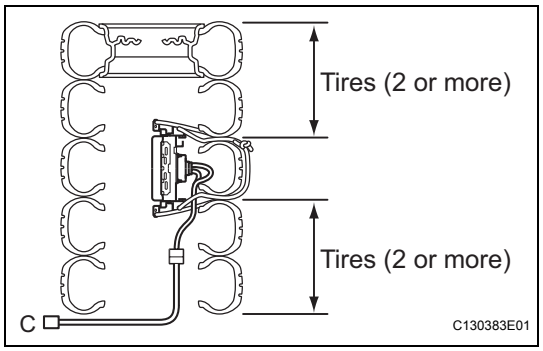

(e) Place the tires.

(1) Place at least 2 tires under the tire which the front passenger airbag assembly is tied to.

(2) Place at least 2 tires over the tire which the front passenger airbag assembly is tied to. The top tire should have a disc wheel installed.

NOTICE:

Do not place the SST connector under the tire because it could be damaged.

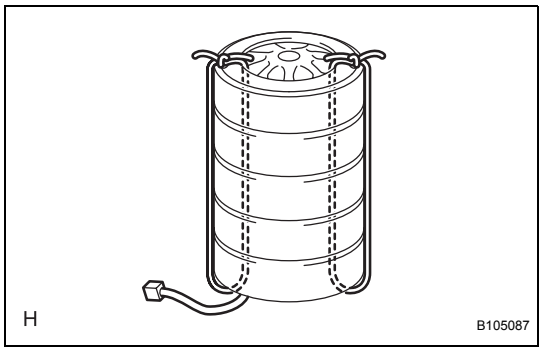

(3) Tie the tires together with 2 wire harnesses.
CAUTION:
Make sure that the wire harness is tight. Looseness in the wire harness results in the tires coming free due to the shock when the airbag is deployed.

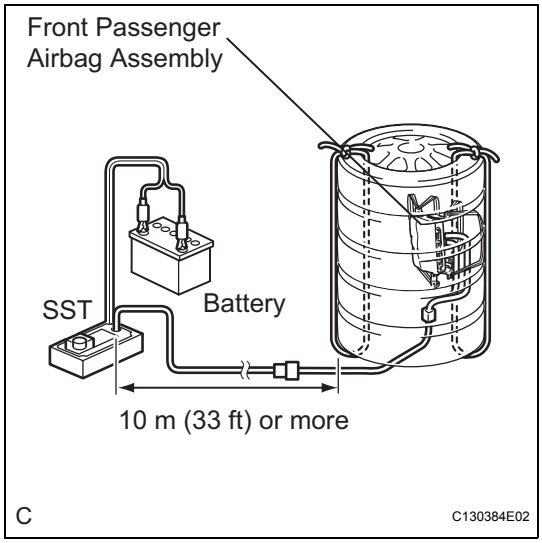

(f) Install the SST.
(1) Connect the SST connector.
SST 09082-00700
NOTICE:
To avoid damaging the SST connector and wire harness, do not lock the secondary lock of the twin lock. Also, secure some slack for the SST wire harness inside the tire.
(2) Move the SST at least 10 m (33 ft) away from the airbag tied down to the tires.

(g) Deploy the airbag.
(1) Connect the red clip of the SST to the battery positive (+) terminal and the black clip of the SST to the negative (-) terminal.
(2) Check that no one is within a 10 m (33 ft) radius of the tire which the front passenger airbag assembly is tied to.
(3) Press the SST activation switch and deploy the airbag.
CAUTION:
When deploying the airbag, make sure that no one is near the tire.
HINT:
The airbag is deployed as the LED of the SST activation switch comes on.

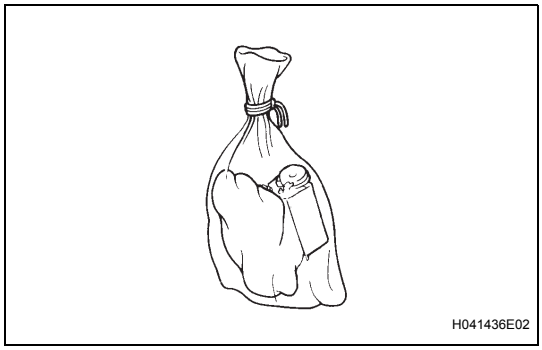

(h) Dispose of the front passenger airbag assembly.
CAUTION:
- **The front passenger airbag assembly becomes extremely hot when the airbag is deployed, so do not touch it for at least 30 minutes after deployment.**
- **Use gloves and safety glasses when handling a front passenger airbag assembly with a deployed airbag.**
- **Do not apply water, etc. to a front passenger airbag assembly with a deployed airbag.**
- **Always wash your hands with water after completing the operation.**

(1) Remove the front passenger airbag assembly from the tire.

(2) Place the front passenger airbag assembly in a plastic bag, tie it tightly and dispose of it as other general part disposal.

REMOVAL

HINT:
- Use the same procedures for the RH side and LH side.
- The procedures listed below are for the LH side.

1. **PRECAUTION**
   CAUTION:
   Be sure to read the "PRECAUTION" thoroughly before servicing (See page RS-1).

2. **DISCONNECT CABLE FROM NEGATIVE BATTERY TERMINAL**
   CAUTION:
   Wait for 90 seconds after disconnecting the cable to prevent the airbag working.

3. **REMOVE ROOF HEADLINING ASSEMBLY**
   HINT:
   Refer to the procedures up to "REMOVE ROOF HEADLINING ASSEMBLY" (See page IR-11).

4. **REMOVE CURTAIN SHIELD AIRBAG ASSEMBLY LH**
   (a) Remove the curtain shield airbag assembly LH in order shown in the illustration.
   (1) Remove the 9 bolts in order of A to I.

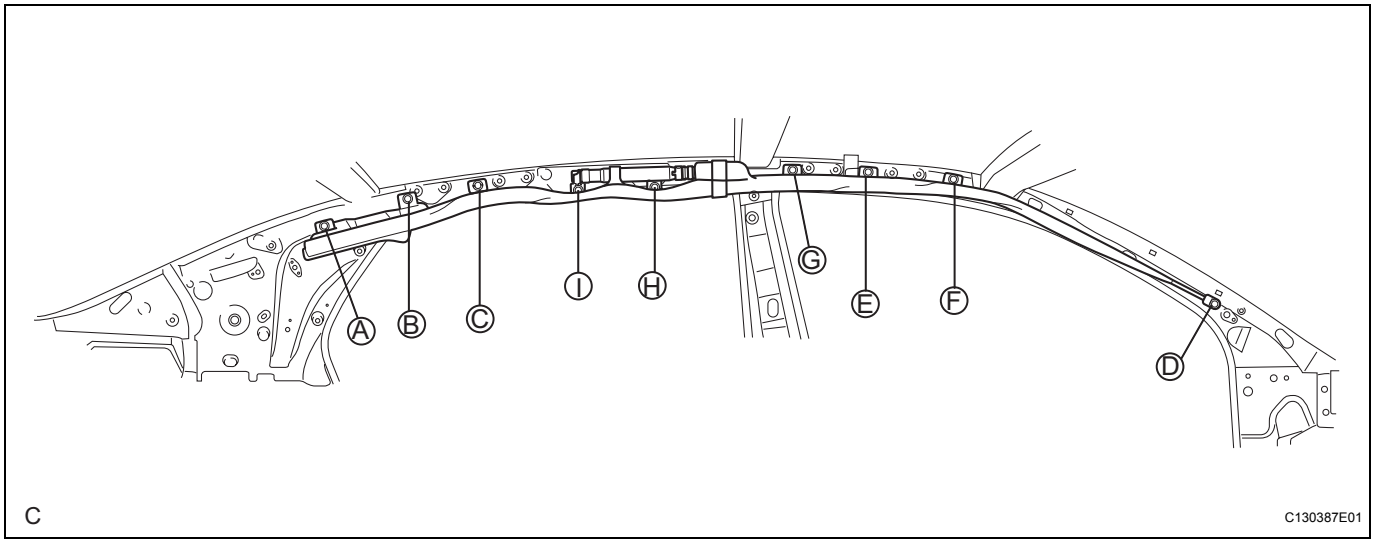

   (b) Disconnect the connector from the curtain shield airbag assembly LH.
   NOTICE:
   When handling the airbag connector, take care not to damage the airbag wire harness.

INSTALLATION

HINT:
- Use the same procedures for the RH side and LH side.
- The procedures listed below are for the LH side.

1. INSTALL CURTAIN SHIELD AIRBAG ASSEMBLY LH

NOTICE:
Do not twist the curtain shield airbag assembly LH when installing it.

(a) Connect the connector to the curtain shield airbag assembly LH.

NOTICE:
When handling the airbag connector, take care not to damage the airbag wire harness.

(b) Install the curtain shield airbag assembly LH in the order shown in the illustration.

(1) Install the 9 bolts in order of A to I.

Torque: Bolt D
11 N*m (112 kgf*cm, 8 ft.*lbf)
Bolt A, B, C, E, F, G, H, I
13 N*m (133 kgf*cm, 10 ft.*lbf)

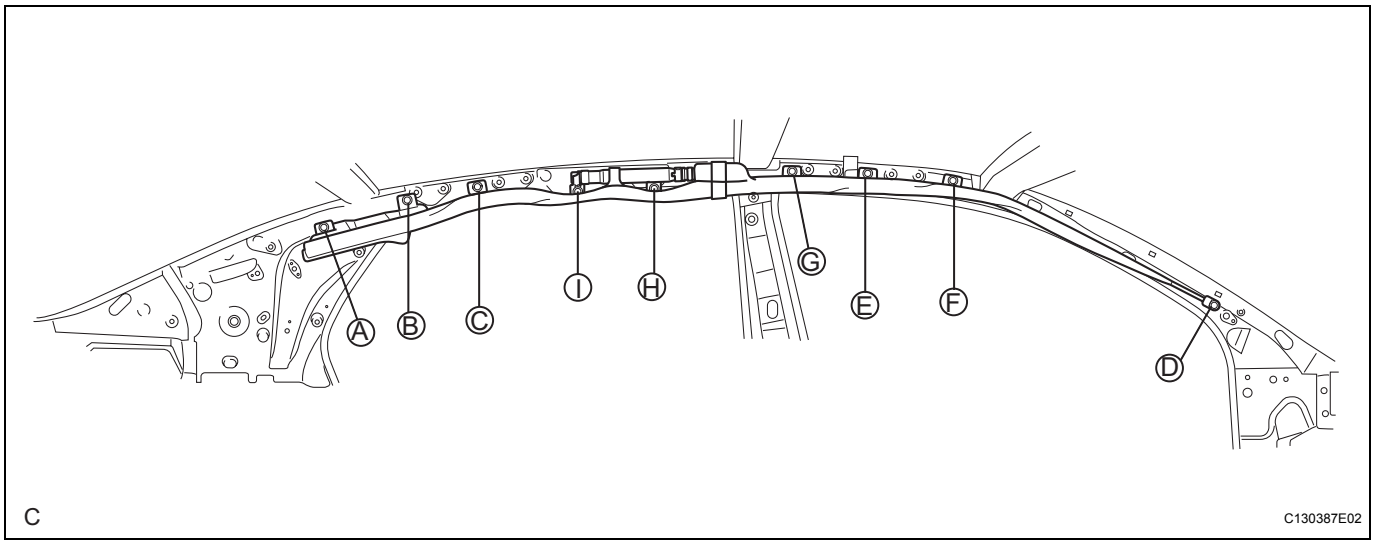

2. INSTALL ROOF HEADLINING ASSEMBLY

HINT:
Refer to the procedures from "INSTALL ROOF HEADLINING ASSEMBLY" (See page IR-19).

3. CONNECT CABLE TO NEGATIVE BATTERY TERMINAL

4. PERFORM INITIALIZATION

(a) Perform initialization (See page IN-29).

HINT:
Some systems need initialization when disconnecting the cable from the negative battery terminal.

5. INSPECT SRS WARNING LIGHT

(a) Inspect the SRS warning light (See page RS-28).

DISPOSAL

HINT:

- Use the same procedures for the RH side and LH side.
- The procedures listed below are for the LH side.
- When scrapping a vehicle equipped with the SRS or disposing of the curtain shield airbag assembly, be sure to deploy the airbag first in accordance with the procedure described below. If any abnormality occurs with the airbag deployment, contact the SERVICE DEPT. of TOYOTA MOTOR SALES, U.S.A., INC.

CAUTION:

- **Never dispose of a curtain shield airbag assembly that has an undeployed airbag.**
- **The airbag produces an exploding sound when it is deployed, so perform the operation outdoors and where it will not create a nuisance to nearby residents.**
- **When deploying the airbag, always use the specified SST (SRS Airbag Deployment Tool). Perform the operation in a place away from electrical noise.**
- **When deploying the airbag, perform the operation at least 10 m (33 ft) away from the curtain shield airbag assembly.**
- **The curtain shield airbag assembly becomes extremely hot when the airbag is deployed, so do not touch it for at least 30 minutes after deployment.**
- **Use gloves and safety glasses when handling a curtain shield airbag assembly with a deployed airbag.**
- **Do not apply water, etc. to a curtain shield airbag assembly with a deployed airbag.**
- **Always wash your hands with water after completing the operation.**

1. DISPOSE OF CURTAIN SHIELD AIRBAG ASSEMBLY (WHEN INSTALLED IN VEHICLE)

HINT:

Prepare a battery as the power source to deploy the airbag.

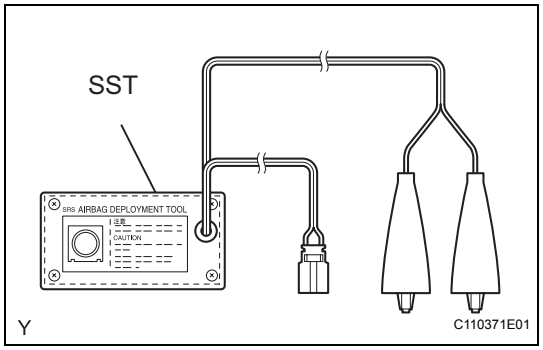

(a) Check the function of the SST (See page RS-306).

(b) Precaution (See page RS-1).

(c) Disconnect the cable from the negative battery terminal.

CAUTION:

Wait for 90 seconds after disconnecting the cable to prevent the airbag working.

(d) Remove the roof headlining assembly.

HINT:

Refer to the procedures up to "REMOVE ROOF HEADLINING ASSEMBLY" (See page IR-11).

(e) Install the SST.

(1) Disconnect the connector from the curtain shield airbag assembly.

NOTICE:

When handling the airbag connector, take care not to damage the airbag wire harness.

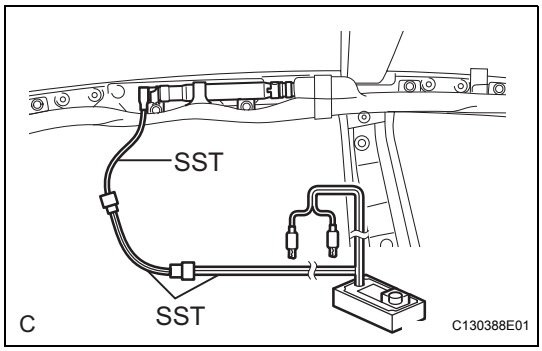

(2) After connecting the SST below to each other, connect them to the curtain shield airbag assembly.
SST 09082-00700, 09082-00802 (09082-10801, 09082-20801)
NOTICE:
To avoid damaging the SST connector and wire harness, do not lock the secondary lock of the twin lock.

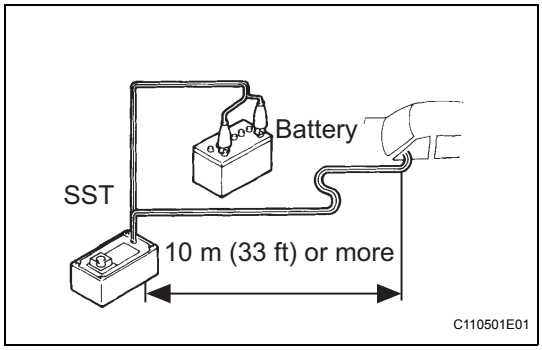

(3) Move the SST at least 10 m (33 ft) away from the vehicle rear side window.
(4) Maintaining enough clearance for the SST wire harness in the rear side window, close all doors and windows of the vehicle.
NOTICE:
Take care not to damage the SST wire harness.
(5) Connect the red clip of the SST to the battery positive (+) terminal and the black clip of the SST to the negative (-) terminal.

(f) Deploy the airbag.
(1) Check that no one is inside the vehicle or within a 10 m (33 ft) radius of the vehicle.
(2) Press the SST activation switch and deploy the airbag.
CAUTION:
- **When deploying the airbag, make sure that no one is near the vehicle.**
- **The curtain shield airbag assembly becomes extremely hot when the airbag is deployed, so do not touch it for at least 30 minutes after deployment.**
- **Use gloves and safety glasses when handling a curtain shield airbag assembly with a deployed airbag.**
- **Do not apply water, etc. to a curtain shield airbag assembly with a deployed airbag.**
- **Always wash your hands with water after completing the operation.**

HINT:
The airbag is deployed as the LED of the SST activation switch comes on.

2. DISPOSE OF CURTAIN SHIELD AIRBAG ASSEMBLY (WHEN NOT INSTALLED IN VEHICLE)
NOTICE:
- **When disposing of the curtain shield airbag assembly, never use the customer's vehicle to deploy the airbag.**
- **Be sure to follow the procedure detailed below when deploying the airbag.**

HINT:
Prepare a battery as the power source to deploy the airbag.

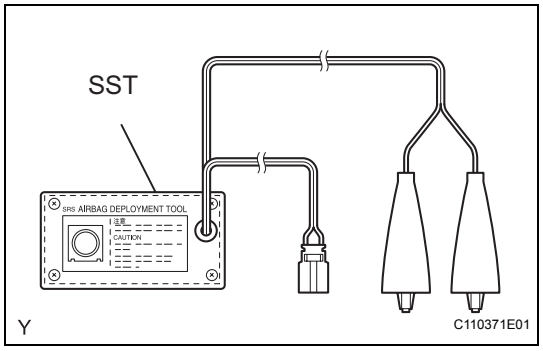

(a) Check the function of the SST (See page RS-306).

(b) Remove the curtain shield airbag assembly (See page RS-338).

CAUTION:
When removing the curtain shield airbag assembly, work must be started 90 seconds after the ignition switch is turned off and the negative (-) terminal cable is disconnected from the battery.

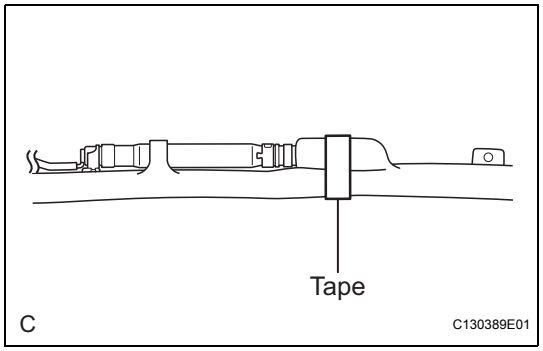

(c) Remove the tape from the curtain shield airbag assembly.

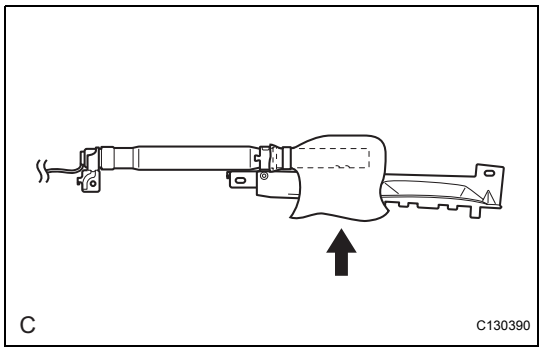

(d) Cut off the deployment section of the curtain shield airbag assembly.

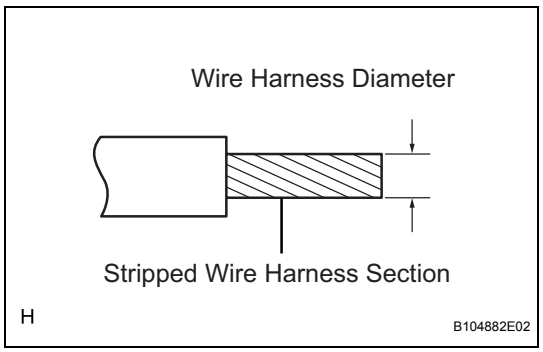

(e) Using a service-purpose wire harness for the vehicle, tie down the curtain shield airbag assembly to the tire.

Wire harness:
Stripped wire harness section
1.25 mm^2 or more (0.0019 $in.^2$ or more)

CAUTION:
If the wire harness is too thin or an alternative object is used to tie down the curtain shield airbag assembly, it may be snapped by the shock when the airbag is deployed. Always use a wire harness for vehicle use with an area of at least 1.25 mm^2 (0.0019 $in.^2$).

HINT:
To calculate the area of the stripped wire harness section:
Area = 3.14 x $(Diameter)^2$ divided by 4

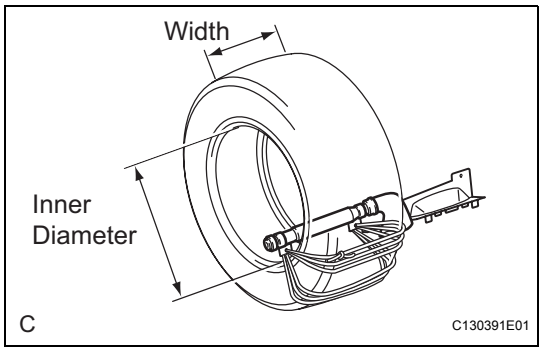

(1) Position the curtain shield airbag assembly inside the tire as shown in the illustration.
Tire size:
Must exceed the following dimensions
Width:
185 mm (7.28 in.)
Inner diameter:
360 mm (14.17 in.)
CAUTION:
Make sure that the wire harness is tight. If there is slack in the wire harness, the curtain shield airbag assembly may become loose due to the shock when the airbag is deployed.
NOTICE:
The tire will be damaged by the airbag deployment, so use an extra tire.

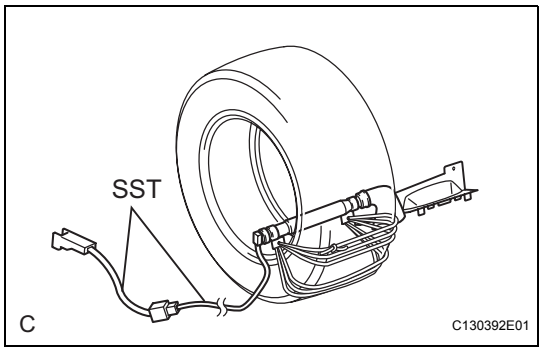

(f) Install the SST.
(1) After connecting the SST below to each other, connect them to the curtain shield airbag assembly.
SST 09082-00802 (09082-10801, 09082-20801)

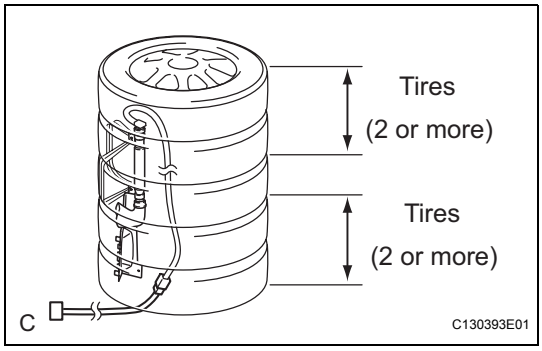

(g) Place the tires.
CAUTION:
Do not face the deployment direction of the curtain shield airbag assembly toward the ground.
(1) Place at least 2 tires under the tire which the curtain shield airbag assembly is tied to.
(2) Place at least 2 tires over the tire which the curtain shield airbag assembly is tied to. The top tire should have a disc wheel installed.
NOTICE:
Do not place the SST connector under the tire because it could be damaged.

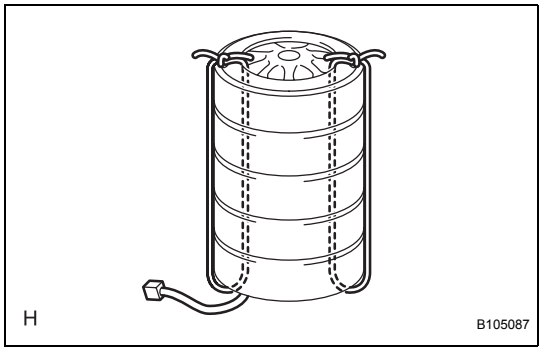

(3) Tie the tires together with 2 wire harnesses.
CAUTION:
Make sure that the wire harness is tight. Looseness in the wire harness results in the tires coming free due to the shock when the airbag is deployed.

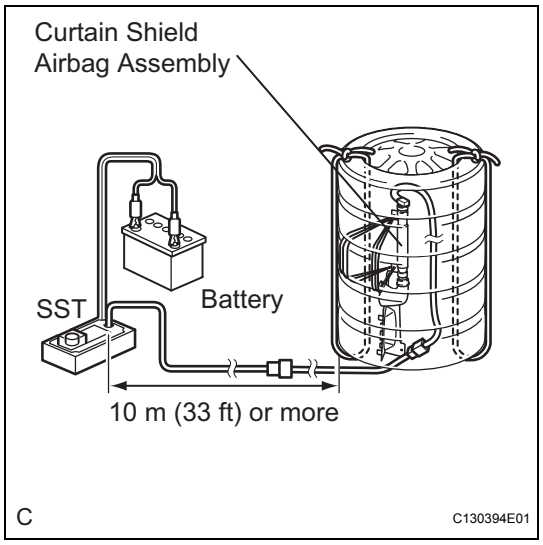

(h) Install the SST.
(1) Connect the SST connector.
SST 09082-00700
NOTICE:
To avoid damaging the SST connector and wire harness, do not lock the secondary lock of the twin lock. Also, secure some slack for the SST wire harness inside the tire.
(2) Move the SST at least 10 m (33 ft) away from the airbag tied down to the tires.

(i) Deploy the airbag.
(1) Connect the red clip of the SST to the battery positive (+) terminal and the black clip of the SST to the negative (-) terminal.
(2) Check that no one is within a 10 m (33 ft) radius of the tire which the curtain shield airbag assembly is tied to.
(3) Press the SST activation switch and deploy the airbag.
CAUTION:
When deploying the airbag, make sure that no one is near the tire.
HINT:
The airbag is deployed as the LED of the SST activation switch comes on.

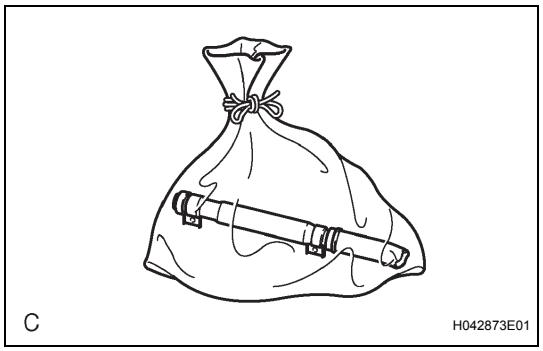

(j) Dispose of the curtain shield airbag assembly.
CAUTION:
- **The curtain shield airbag assembly becomes extremely hot when the airbag is deployed, so do not touch it for at least 30 minutes after deployment.**
- **Use gloves and safety glasses when handling a curtain shield airbag assembly with a deployed airbag.**
- **Do not apply water, etc. to a curtain shield airbag assembly with a deployed airbag.**
- **Always wash your hands with water after completing the operation.**

(1) Remove the curtain shield airbag assembly from the tire.
(2) Place the curtain shield airbag assembly in a plastic bag, tie it tightly and dispose of it as other general part disposal.

REMOVAL

1. **PRECAUTION**
   CAUTION:
   Be sure to read the "PRECAUTION" thoroughly before servicing (See page RS-1).
2. **DISCONNECT CABLE FROM NEGATIVE BATTERY TERMINAL**
   CAUTION:
   Wait for 90 seconds after disconnecting the cable to prevent the airbag working.
3. **REMOVE SHIFT LEVER KNOB SUB-ASSEMBLY (See page IP-12)**
4. **REMOVE CONSOLE PANEL SUB-ASSEMBLY UPPER (See page IP-13)**
5. **REMOVE CONSOLE BOX ASSEMBLY (See page IP-13)**
6. **REMOVE CONSOLE BOX FRONT (See page IP-14)**
7. **REMOVE CONSOLE BOX DUCT NO.1**
8. **REMOVE CENTER AIRBAG SENSOR ASSEMBLY**
   (a) Disconnect the holder (with connectors) from the center airbag sensor assembly.
   (b) Remove the 3 bolts and the center airbag sensor assembly.

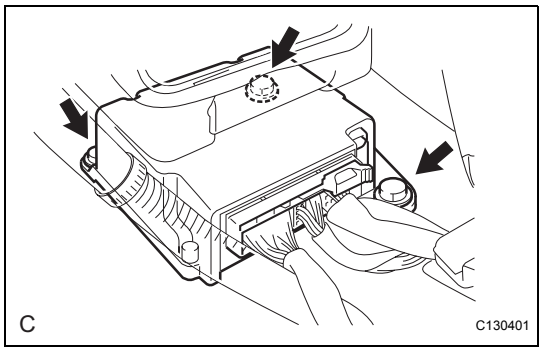

INSTALLATION

1. INSTALL CENTER AIRBAG SENSOR ASSEMBLY

(a) Check that the ignition switch is off.

(b) Check that the battery negative (-) terminal is disconnected.

CAUTION:
After disconnecting the negative battery terminal, wait for at least 90 seconds before starting the operation.

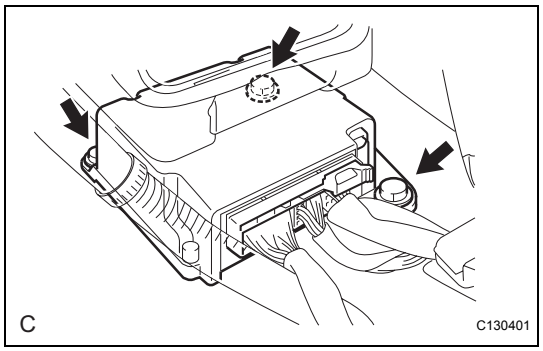

(c) Temporarily install the center airbag sensor assembly with the 3 bolts.

NOTICE:
- **If the center airbag sensor assembly has been dropped, or there are any cracks, dents or other defects in the case, bracket or connector, replace it with a new one.**
- **When installing the center airbag sensor assembly, be careful that the SRS wiring does not interfere with other parts and that it is not pinched between other parts.**

(d) Tighten the 3 bolts to the specified torque.
Torque: 17.5 N*m (179 kgf*cm, 13 ft.*lbf)

(e) Check that there is no looseness in the installation parts of the center airbag sensor assembly.

(f) Connect the holder (with connectors) to the center airbag sensor assembly.

(g) Check that the water-proof sheet is properly set.

2. INSTALL CONSOLE BOX DUCT NO.1

3. INSTALL CONSOLE BOX FRONT

4. INSTALL CONSOLE BOX ASSEMBLY

5. INSTALL CONSOLE PANEL SUB-ASSEMBLY UPPER

6. INSTALL SHIFT LEVER KNOB SUB-ASSEMBLY

7. CONNECT CABLE TO NEGATIVE BATTERY TERMINAL

8. PERFORM INITIALIZATION

(a) Perform initialization (See page IN-29).
HINT:
Some systems need initialization when disconnecting the cable from the negative battery terminal.

9. INSPECT SRS WARNING LIGHT

(a) Inspect the SRS warning light (See page RS-28).

FRONT AIRBAG SENSOR

COMPONENTS

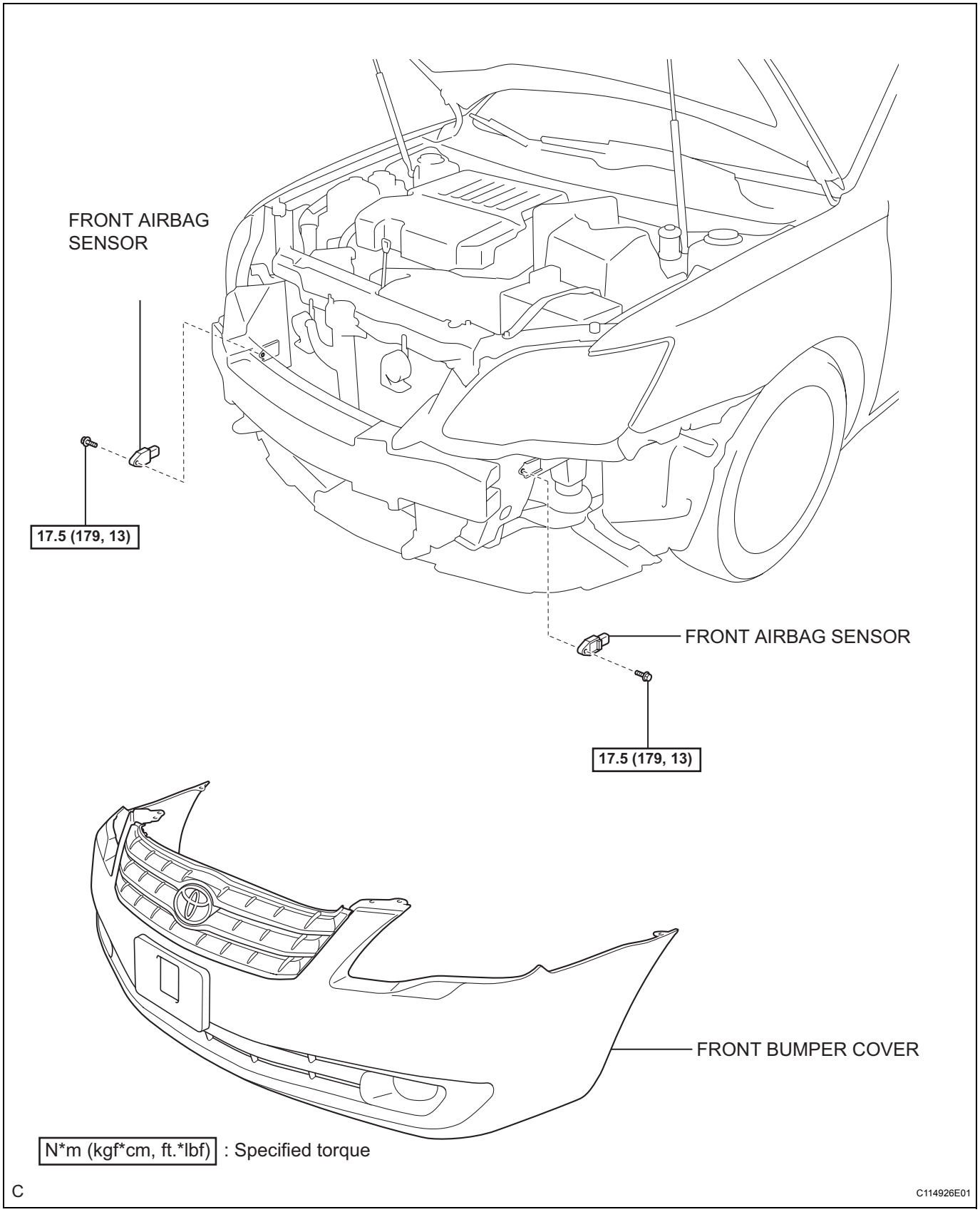

ON-VEHICLE INSPECTION

1. **INSPECT FRONT AIRBAG SENSOR (VEHICLE NOT INVOLVED IN COLLISION)**
   (a) Perform a diagnostic system check (See page RS-28).

2. **INSPECT FRONT AIRBAG SENSOR (VEHICLE INVOLVED IN COLLISION AND AIRBAG HAS NOT DEPLOYED)**
   (a) Perform a diagnostic system check (See page RS-28).
   (b) When the front bumper of the vehicle or its area is damaged, check if there is any damage to the front airbag sensor. If any of the front airbag sensor have defects as mentioned below, replace it with a new one:
   - Cracks, dents or chips on the sensor housing.
   - Cracks or other damage to the connector.
   - Peeling off of the label or damage to the serial number.

   CAUTION:
   Be sure to follow the correct removal and installation procedures.

3. **INSPECT FRONT AIRBAG SENSOR (VEHICLE INVOLVED IN COLLISION AND AIRBAG HAS DEPLOYED)**
   (a) Replace the front airbag sensor.
   CAUTION:
   Be sure to follow the correct removal and installation procedures.
   HINT:
   The front airbag sensor on the impacted side should be replaced after the steering pad, front passenger airbag assembly or driver side knee airbag assembly has deployed.

REMOVAL

HINT:
- Use the same procedures for the RH side and LH side.
- The procedures listed below are for the LH side.

1. **PRECAUTION**
   CAUTION:
   Be sure to read the "PRECAUTION" thoroughly before servicing (See page RS-1).
2. **DISCONNECT CABLE FROM NEGATIVE BATTERY TERMINAL**
   CAUTION:
   Wait for 90 seconds after disconnecting the cable to prevent the airbag working.
3. **REMOVE FRONT BUMPER COVER (See page ET-2)**
4. **REMOVE FRONT AIRBAG SENSOR**
   (a) Disconnect the connector from the front airbag sensor (LH).
   (b) Remove the bolt and the front airbag sensor (LH).

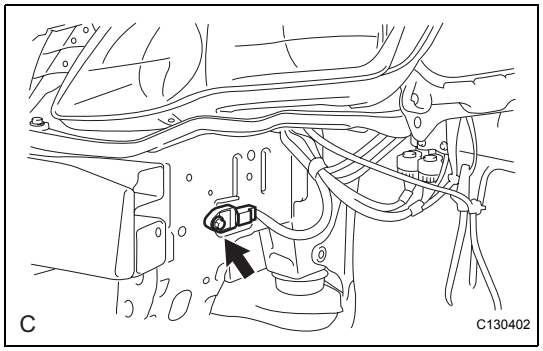

INSTALLATION

HINT:
- Use the same procedures for the RH side and LH side.
- The procedures listed below are for the LH side.

1. INSTALL FRONT AIRBAG SENSOR

(a) Check that the ignition switch is off.

(b) Check that the battery negative (-) terminal is disconnected.
CAUTION:
After disconnecting the negative battery terminal, wait for at least 90 seconds before starting the operation.

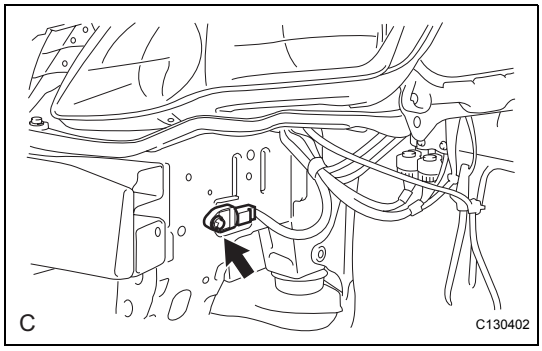

(c) Install the front airbag sensor (LH) with the bolt.
Torque: 17.5 N*m (179 kgf*cm, 13 in.*lbf)
NOTICE:
- **If the front airbag sensor (LH) has been dropped, or there are any cracks, dents or other defects in the case or connector, replace it with a new one.**
- **When installing the front airbag sensor (LH), be careful that the SRS wiring does not interfere with other parts and that it is not pinched between other parts.**

(d) Check that there is no looseness in the installation parts of the front airbag sensor (LH).

(e) Connect the connector to the front airbag sensor (LH).

2. INSTALL FRONT BUMPER COVER (See page ET-4)

3. CONNECT CABLE TO NEGATIVE BATTERY TERMINAL

4. PERFORM INITIALIZATION

(a) Perform initialization (See page IN-29).
HINT:
Some systems need initialization when disconnecting the cable from the negative battery terminal.

5. INSPECT SRS WARNING LIGHT

(a) Inspect the SRS warning light (See page RS-28).

SIDE AIRBAG SENSOR

COMPONENTS

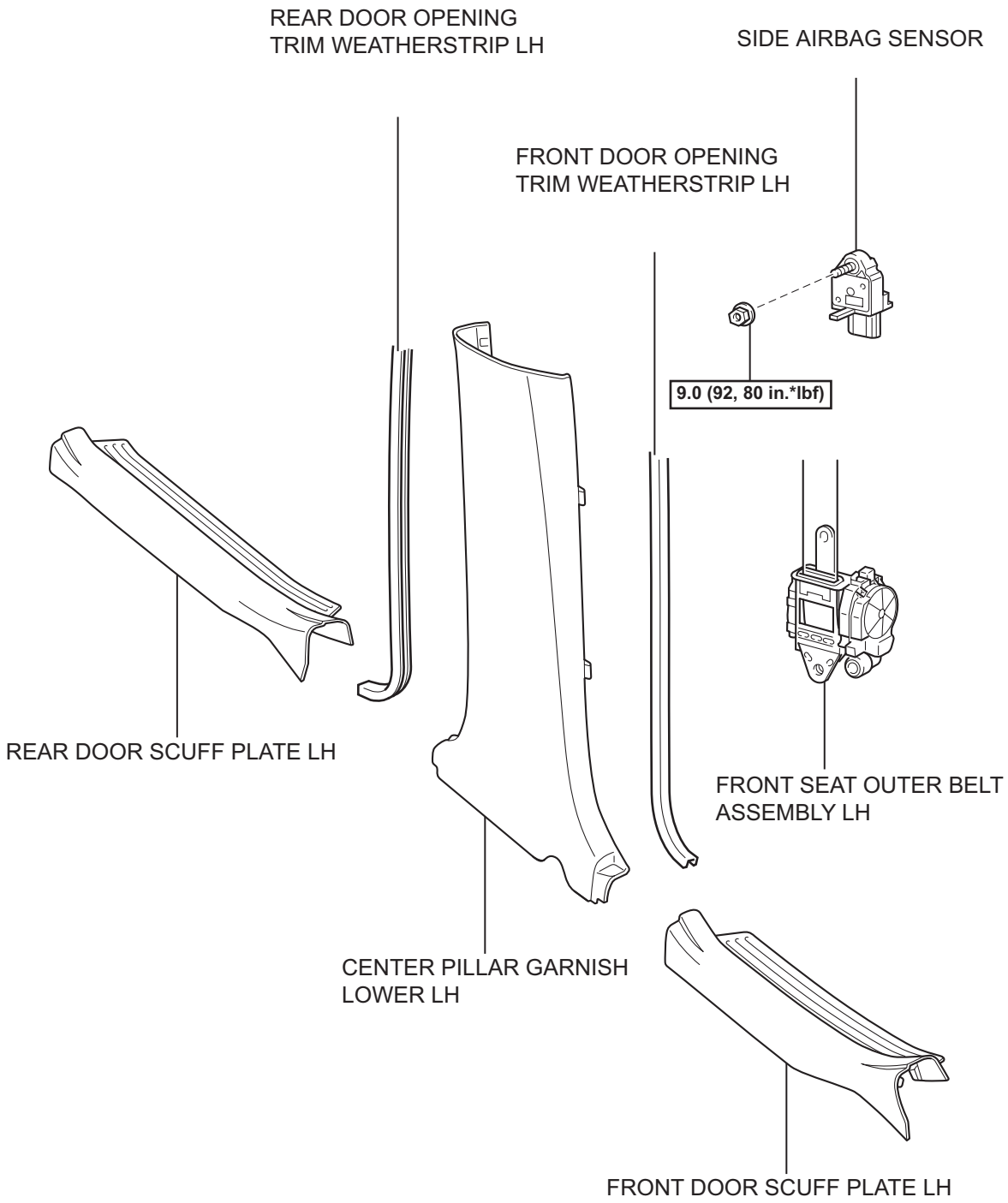

N*m (kgf*cm, ft.*lbf) : Specified torque

C114927E01

RS

ON-VEHICLE INSPECTION

1. **INSPECT SIDE AIRBAG SENSOR (VEHICLE NOT INVOLVED IN COLLISION)**
   (a) Perform a diagnostic system check (See page RS-28).

2. **INSPECT SIDE AIRBAG SENSOR (VEHICLE INVOLVED IN COLLISION AND AIRBAG HAS NOT DEPLOYED)**
   (a) Perform a diagnostic system check (See page RS-28).
   (b) When the center pillar of the vehicle or its area is damaged, check if there is any damage to the side airbag sensor. If there are any defects as mentioned below, replace the side airbag sensor with a new one:
   - Cracks, dents or chips on the sensor housing.
   - Cracks or other damage to the connector.
   - Peeling off of the label or damage to the serial number.

   CAUTION:
   Be sure to follow the correct removal and installation procedures.

3. **INSPECT SIDE AIRBAG SENSOR (VEHICLE INVOLVED IN COLLISION AND AIRBAG HAS DEPLOYED)**
   (a) Replace the side airbag sensor.
   CAUTION:
   Be sure to follow the correct removal and installation procedures.
   HINT:
   The side airbag sensor on the impacted side should be replaced after the front seat airbag assembly and curtain shield airbag assembly have deployed.

REMOVAL

HINT:
- Use the same procedures for the RH side and LH side.
- The procedures listed below are for the LH side.

1. **PRECAUTION**
   CAUTION:
   Be sure to read the "PRECAUTION" thoroughly before servicing (See page RS-1).
2. **DISCONNECT CABLE FROM NEGATIVE BATTERY TERMINAL**
   CAUTION:
   Wait for 90 seconds after disconnecting the cable to prevent the airbag working.
3. **REMOVE FRONT DOOR SCUFF PLATE LH (See page IR-12)**
4. **REMOVE REAR DOOR SCUFF PLATE LH (See page IR-12)**
5. **REMOVE FRONT DOOR OPENING TRIM WEATHERSTRIP LH**
6. **REMOVE REAR DOOR OPENING TRIM WEATHERSTRIP LH**
7. **REMOVE CENTER PILLAR GARNISH LOWER LH (See page IR-13)**
8. **REMOVE FRONT SEAT OUTER BELT ASSEMBLY LH (See page SB-13)**
9. **REMOVE SIDE AIRBAG SENSOR LH**
   (a) Disconnect the connector from the side airbag sensor LH.
   (b) Remove the nut and the side airbag sensor LH.

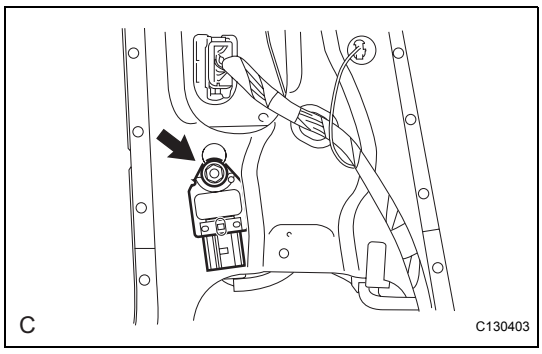

INSTALLATION

HINT:
- Use the same procedures for the RH side and LH side.
- The procedures listed below are for the LH side.

1. INSTALL SIDE AIRBAG SENSOR LH

(a) Check that the ignition switch is off.

(b) Check that the battery negative (-) terminal is disconnected.
CAUTION:
After disconnecting the negative battery terminal, wait for at least 90 seconds before starting the operation.

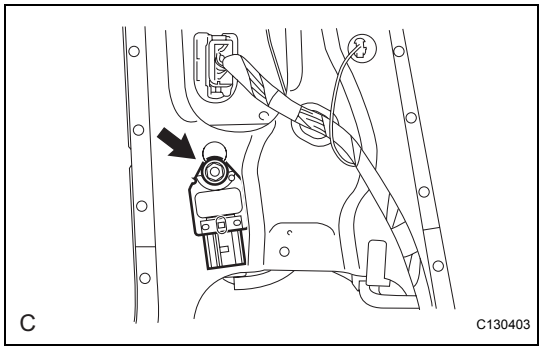

(c) Install the side airbag sensor LH with the nut.
Torque: 9.0 N*m (92 kgf*cm, 80 in.*lbf)
NOTICE:
- **If the side airbag sensor LH has been dropped, or there are any cracks, dents or other defects in the case or connector, replace it with a new one.**
- **When installing the side airbag sensor LH, be careful that the SRS wiring does not interfere with other parts and that it is not pinched between other parts.**

(d) Check that there is no looseness in the installation parts of the side airbag sensor LH.

(e) Connect the connector to the side airbag sensor LH.

2. INSTALL FRONT SEAT OUTER BELT ASSEMBLY (See page SB-13)

3. INSTALL CENTER PILLAR GARNISH LOWER LH

4. INSTALL REAR DOOR OPENING TRIM WEATHERSTRIP LH

5. INSTALL FRONT DOOR OPENING TRIM WEATHERSTRIP LH

6. INSTALL REAR DOOR SCUFF PLATE LH

7. INSTALL FRONT DOOR SCUFF PLATE LH

8. CONNECT CABLE TO NEGATIVE BATTERY TERMINAL

9. PERFORM INITIALIZATION

(a) Perform initialization (See page IN-29).
HINT:
Some systems need initialization when disconnecting the cable from the negative battery terminal.

10. INSPECT SRS WARNING LIGHT

(a) Inspect the SRS warning light (See page RS-28).

REAR AIRBAG SENSOR

COMPONENTS

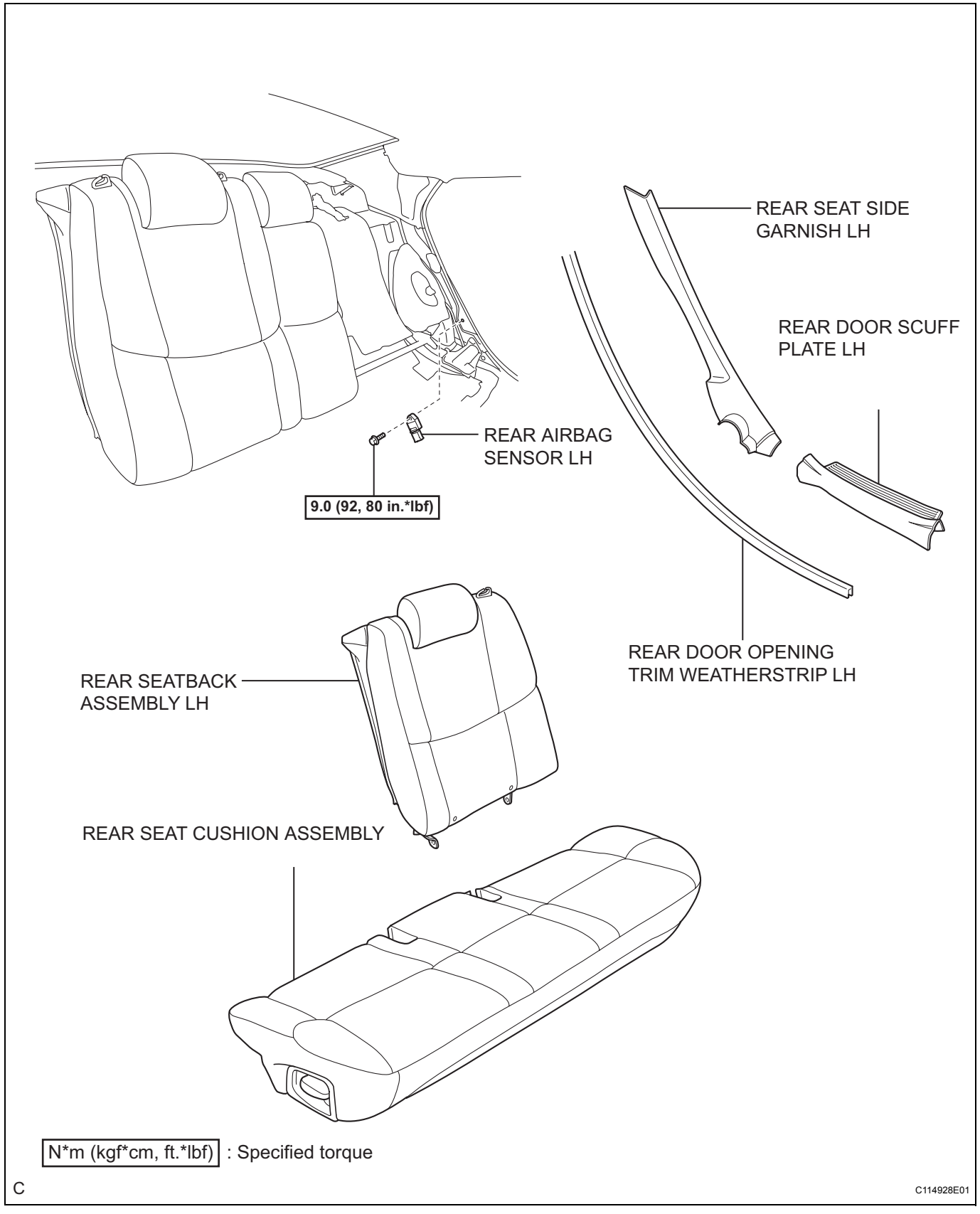

ON-VEHICLE INSPECTION

1. **INSPECT REAR AIRBAG SENSOR (VEHICLE NOT INVOLVED IN COLLISION)**
   (a) Perform a diagnostic system check (See page RS-28).

2. **INSPECT REAR AIRBAG SENSOR (VEHICLE INVOLVED IN COLLISION AND AIRBAG HAS NOT DEPLOYED)**
   (a) Perform a diagnostic system check (See page RS-28).
   (b) When the quarter panel of the vehicle or its area is damaged, check if there is any damage to the rear airbag sensor. If there are any defects as mentioned below, replace the rear airbag sensor with a new one:
   - Cracks, dents or chips on the sensor housing.
   - Cracks or other damage to the connector.
   - Peeling off of the label or damage to the serial number.

   CAUTION:
   Be sure to follow the correct removal and installation procedures.

3. **INSPECT REAR AIRBAG SENSOR (VEHICLE INVOLVED IN COLLISION AND AIRBAG HAS DEPLOYED)**
   (a) Replace the rear airbag sensor.
   CAUTION:
   Be sure to follow the correct removal and installation procedures.
   HINT:
   The rear airbag sensor on the impacted side should be replaced after the curtain shield airbag assembly has deployed.

REMOVAL

HINT:
- Use the same procedures for the RH side and LH side.
- The procedures listed below are for the LH side.

1. **PRECAUTION**
   CAUTION:
   Be sure to read the "PRECAUTION" thoroughly before servicing (See page RS-1).
2. **DISCONNECT CABLE FROM NEGATIVE BATTERY TERMINAL**
   CAUTION:
   Wait for 90 seconds after disconnecting the cable to prevent the airbag working.
3. **REMOVE REAR SEAT CUSHION ASSEMBLY (See page SE-68)**
4. **REMOVE REAR SEAT ASSEMBLY LH (See page SE-68)**
5. **REMOVE REAR DOOR SCUFF PLATE LH (See page IR-12)**
6. **REMOVE REAR DOOR OPENING TRIM WEATHERSTRIP LH**
7. **REMOVE REAR SEAT SIDE GARNISH LH**
8. **REMOVE REAR AIRBAG SENSOR LH**
   (a) Disconnect the connector from the rear airbag sensor LH.
   (b) Remove the bolt and the rear airbag sensor LH.

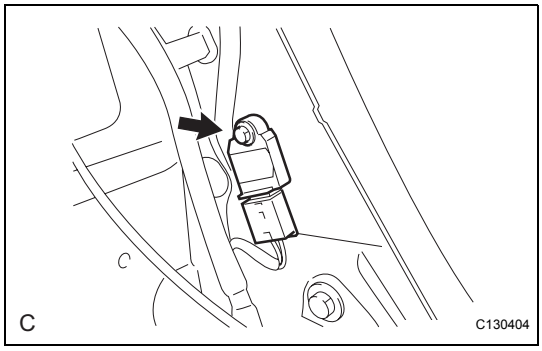

INSTALLATION

HINT:

- Use the same procedures for the RH side and LH side.
- The procedures listed below are for the LH side.

1. INSTALL REAR AIRBAG SENSOR LH

(a) Check that the ignition switch is off.

(b) Check that the battery negative (-) terminal is disconnected.

CAUTION:
After disconnecting the negative battery terminal, wait for at least 90 seconds before starting the operation.

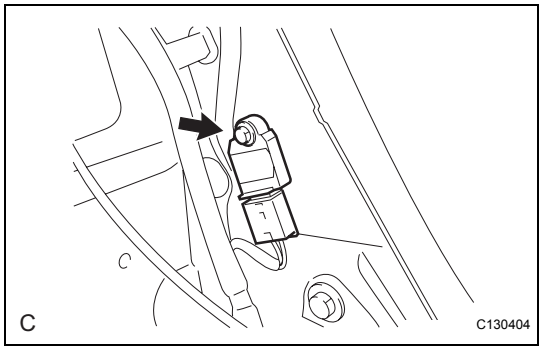

(c) Install the rear airbag sensor LH with the bolt.
Torque: 9.0 N*m (92 kgf*cm, 80 in.*lbf)
CAUTION:
- **If the rear airbag sensor LH has been dropped, or there are any cracks, dents or other defects in the case or connector, replace it with a new one.**
- **When installing the rear airbag sensor LH, be careful that the SRS wiring does not interfere with other parts and that it is not pinched between other parts.**

(d) Check that there is no looseness in the installation parts of the rear airbag sensor LH.

(e) Connect the connector to the rear airbag sensor LH.

2. INSTALL REAR SEAT SIDE GARNISH LH

3. INSTALL REAR DOOR OPENING TRIM WEATHERSTRIP LH

4. INSTALL REAR DOOR SCUFF PLATE LH

5. INSTALL REAR SEATBACK ASSEMBLY LH (See page SE-77)

6. INSTALL REAR SEAT CUSHION ASSEMBLY

7. CONNECT CABLE TO NEGATIVE BATTERY TERMINAL

8. PERFORM INITIALIZATION

(a) Perform initialization (See page IN-29).
HINT:
Some systems need initialization when disconnecting the cable from the negative battery terminal.

9. INSPECT SRS WARNING LIGHT

(a) Inspect the SRS warning light (See page RS-28).

SEAT POSITION SENSOR

COMPONENTS

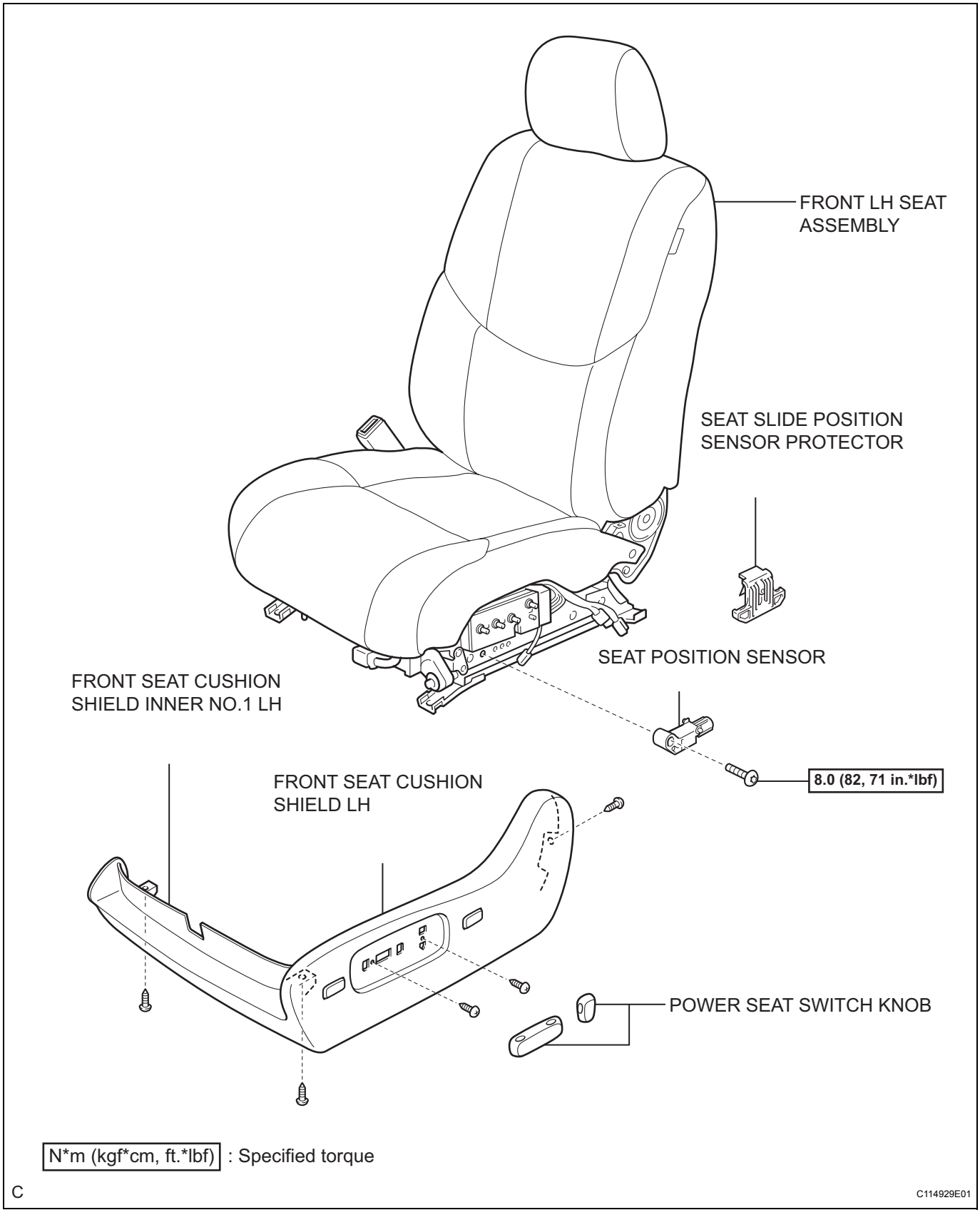

ON-VEHICLE INSPECTION

1. **INSPECT SEAT POSITION SENSOR (VEHICLE NOT INVOLVED IN COLLISION)**
   (a) Perform a diagnostic system check (See page RS-28).

2. **INSPECT SEAT POSITION SENSOR (VEHICLE INVOLVED IN COLLISION)**
   (a) Perform a diagnostic system check (See page RS-28).
   (b) Even if the airbag was not deployed, check if there is any damage to the seat position sensor.
   If there are any defects as mentioned below, replace the seat position sensor with a new one:
   - Cracks, dents or chips on the sensor housing.
   - Cracks or other damage to the connector.

   CAUTION:
   Be sure to follow the correct removal and installation procedures.

REMOVAL

1. **PRECAUTION**
   CAUTION:
   Be sure to read the "PRECAUTION" thoroughly before servicing (See page RS-1).
2. **DISCONNECT CABLE FROM NEGATIVE BATTERY TERMINAL**
   CAUTION:
   Wait for 90 seconds after disconnecting the cable to prevent the airbag working.
3. **REMOVE FRONT SEAT ASSEMBLY (See page SE-51)**
4. **REMOVE RECLINING POWER SEAT SWITCH KNOB (See page SE-51)**
5. **REMOVE SLIDE AND VERTICAL POWER SEAT SWITCH KNOB (See page SE-51)**
6. **REMOVE FRONT SEAT CUSHION SHIELD INNER NO.1 LH (See page SE-52)**
7. **REMOVE SEAT SLIDE POSITION SENSOR PROTECTOR**
   (a) Remove the seat slide position sensor protector from the seat position sensor.
8. **REMOVE SEAT POSITION SENSOR**
   (a) Disconnect the connector from the seat position sensor.

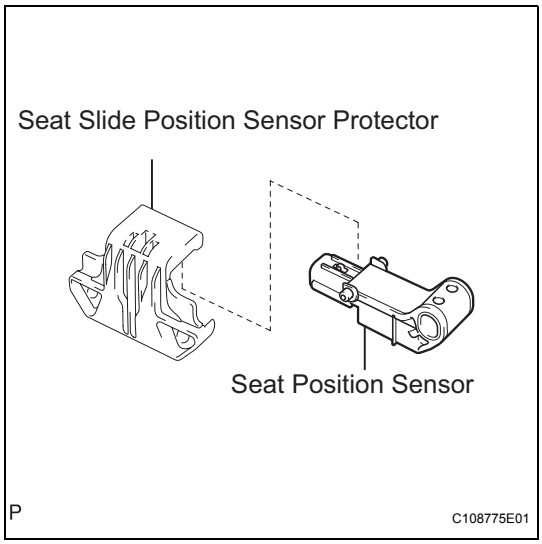

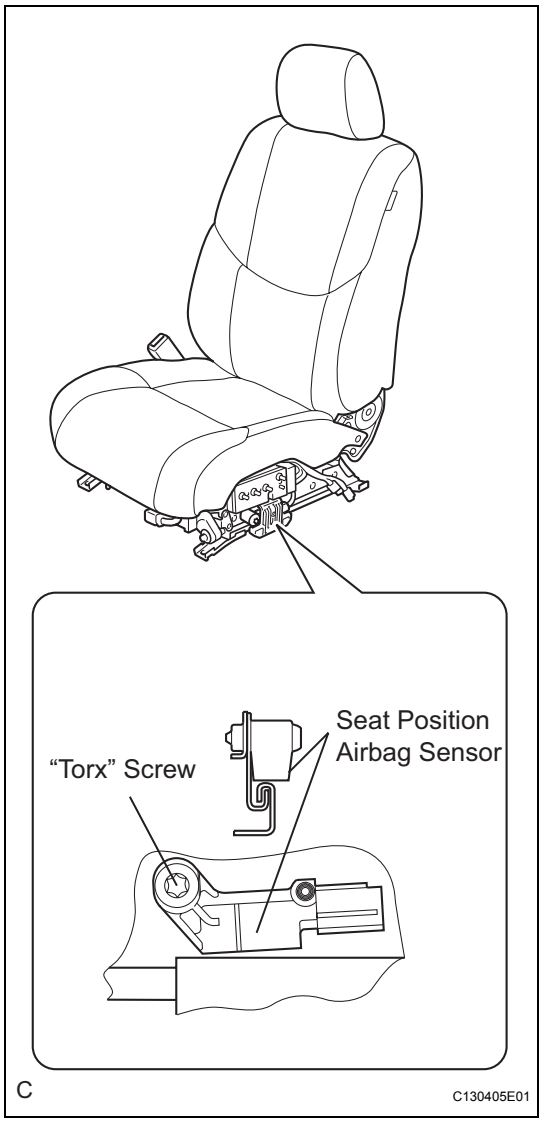

(b) Using a "torx" socket wrench (T30), remove the "torx" screw and the seat position sensor.

INSTALLATION

1. INSTALL SEAT POSITION SENSOR

(a) Check that the ignition switch is off.

(b) Check that the battery negative (-) terminal is disconnected.

CAUTION:
After disconnecting the negative battery terminal, wait for at least 90 seconds before starting the operation.

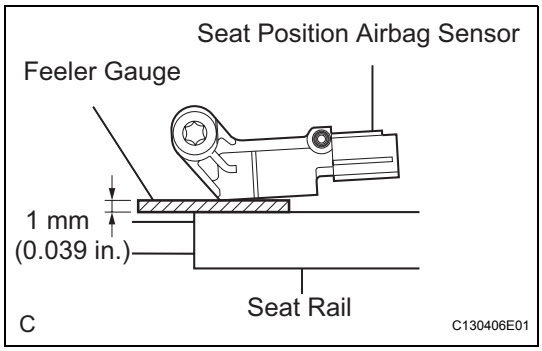

(c) Using a feeler gauge 1 mm (0.039 in.), install the seat position sensor.

NOTICE:
- **If the seat position sensor has been dropped, or there are any cracks, dents or other defects in the case or connector, replace it with a new one.**
- **When installing the seat position sensor, be careful that the SRS wiring does not interfere with other parts and that it is not pinched between other parts.**

HINT:
Be sure that a clearance between the seat position sensor and the seat rail is within 0.6 mm (0.023 in.) to 2 mm (0.079 in.).

(d) Using a "torx" socket wrench, tighten the "torx" screw to install the seat position sensor.
Torque: 8.0 N*m (82 kgf*cm, 71 in.*lbf)

(e) Make sure that a clearance between the seat position sensor and the seat rail is within 0.6 mm (0.023 in.) to 2 mm (0.079 in.).

(f) Check that there is no looseness in the installation parts of the seat position sensor.

(g) Connect the connector to the seat position sensor.

2. INSTALL SEAT SLIDE POSITION SENSOR PROTECTOR

3. INSTALL FRONT SEAT CUSHION SHIELD INNER NO.1 LH

4. INSTALL SLIDE AND VERTICAL POWER SEAT SWITCH KNOB

5. INSTALL RECLINING POWER SEAT SWITCH KNOB

6. INSTALL FRONT SEAT ASSEMBLY (See page SE-63)

7. CONNECT CABLE TO NEGATIVE BATTERY TERMINAL

8. PERFORM INITIALIZATION

(a) Perform initialization (See page IN-29).
HINT:
Some systems need initialization when disconnecting the cable from the negative battery terminal.

9. INSPECT CHECK POWER SEAT FUNCTION

10. INSPECT SEAT HEATER OPERATION

11. INSPECT SRS WARNING LIGHT

(a) Inspect the SRS warning light (See page RS-28).

OCCUPANT CLASSIFICATION ECU

COMPONENTS

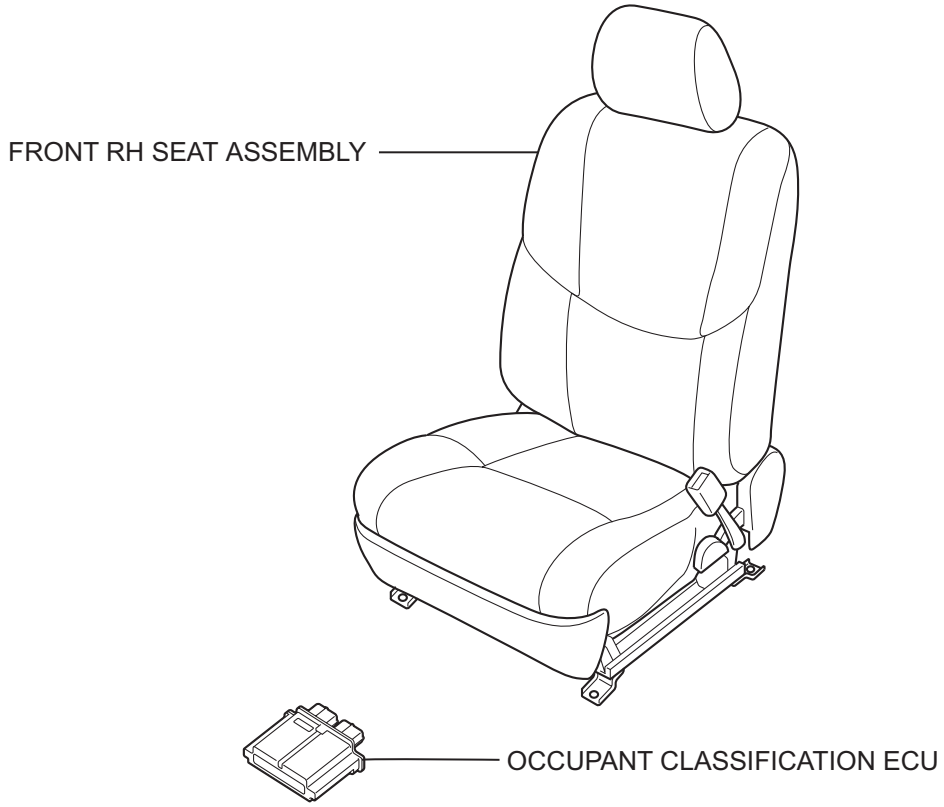

C

C114930E01

ON-VEHICLE INSPECTION

1. **INSPECT OCCUPANT CLASSIFICATION ECU (VEHICLE NOT INVOLVED IN COLLISION)**
   (a) Perform a diagnostic system check (See page RS-212).

2. **INSPECT OCCUPANT CLASSIFICATION ECU (VEHICLE INVOLVED IN COLLISION)**
   (a) Perform a diagnostic system check (See page RS-212).
   (b) Even if the airbag was not deployed, check if there is any damage to the occupant classification ECU. If there are any defects as mentioned below, replace the occupant classification ECU with a new one:
   - Cracks, dents or chips on the case.
   - Cracks or other damage to the connector.

   CAUTION:
   Be sure to follow the correct removal and installation procedures.

REMOVAL

1. **PRECAUTION**
   CAUTION:
   Be sure to read the "PRECAUTION" thoroughly before servicing (See page RS-200).
2. **DISCONNECT CABLE FROM NEGATIVE BATTERY TERMINAL**
   CAUTION:
   Wait for 90 seconds after disconnecting the cable to prevent the airbag working.
3. **REMOVE FRONT RH SEAT ASSEMBLY (See page SE-40)**
4. **REMOVE OCCUPANT CLASSIFICATION ECU**
   (a) Disconnect the 2 connectors from the occupant classification ECU.
   (b) Using a screwdriver, remove the occupant classification ECU.

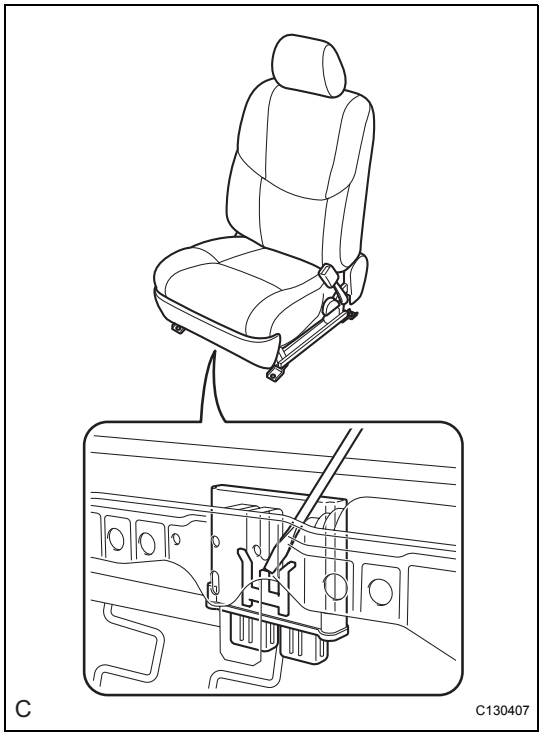

INSTALLATION

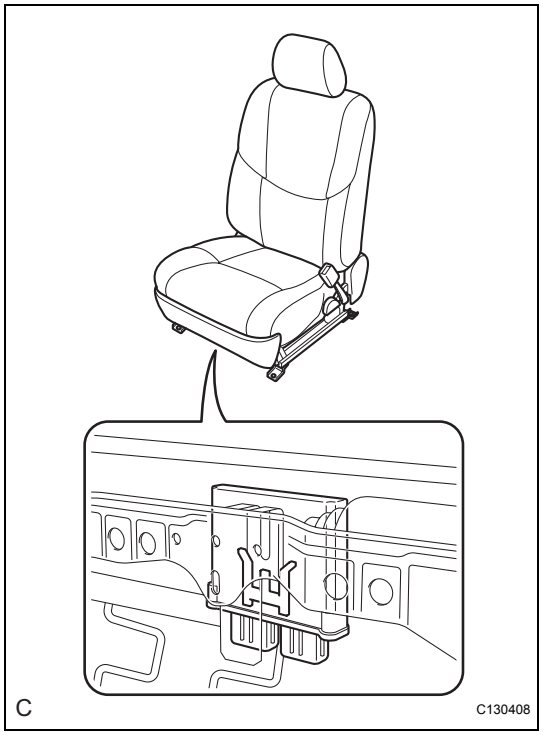

1. **INSTALL OCCUPANT CLASSIFICATION ECU**
   (a) Check that the ignition switch is off.
   (b) Check that the battery negative (-) terminal is disconnected.
   CAUTION:
   After disconnecting the negative battery terminal, wait for at least 90 seconds before starting the operation.
   (c) Install the occupant classification ECU.
   (d) Connect the 2 connectors to the occupant classification ECU.
   NOTICE:
   - **If the occupant classification ECU has been dropped, or there are any cracks, dents or other defects in the case or connector, replace it with a new one.**
   - **When installing the occupant classification ECU, be careful that the SRS wiring does not interfere with other parts and that it is not pinched between other parts.**
2. **INSTALL FRONT RH SEAT ASSEMBLY (See page SE-42)**
3. **CONNECT CABLE TO NEGATIVE BATTERY TERMINAL**
4. **PERFORM INITIALIZATION**
   (a) Perform initialization (See page IN-29).
   HINT:
   Some systems need initialization when disconnecting the cable from the negative battery terminal.
5. **INSPECT CHECK POWER SEAT FUNCTION**
6. **INSPECT SEAT HEATER OPERATION**
7. **INSPECT SRS WARNING LIGHT**
   (a) Inspect the SRS warning light (See page RS-28).

OCCUPANT CLASSIFICATION SYSTEM

PRECAUTION

1. INSPECTION PROCEDURE FOR VEHICLE INVOLVED IN ACCIDENT

(a) Perform the zero point calibration and sensitivity check if any of the following conditions occur.
- The occupant classification ECU is replaced.
- Accessories (seatback tray and seat cover, etc.) are installed.
- The front passenger seat is removed from the vehicle.
- The passenger airbag ON/OFF indicator ("OFF") comes on when the front passenger seat is not occupied.
- The vehicle is brought to the workshop for repair due to an accident or a collision.

NOTICE:
When an accident vehicle is brought into the workshop for repair, check the flatness of the body side that is equipped with the passenger seat. If the flatness is not within +- 3.0 mm (0.118 in.), adjust it to the specified range.

2. EXPRESSIONS OF IGNITION SWITCH

The type of ignition switch used on this model differs according to the specifications of the vehicle.
The expressions listed in the table below are used in this section.

Switch Type		Ignition Switch (position)	Engine Switch (condition)
Expression	Ignition Switch off	LOCK	Off
	Ignition Switch on (IG)	ON	On (IG)
	Ignition Switch on(ACC)	ACC	On (ACC)
	Engine Start	START	Start

PARTS LOCATION

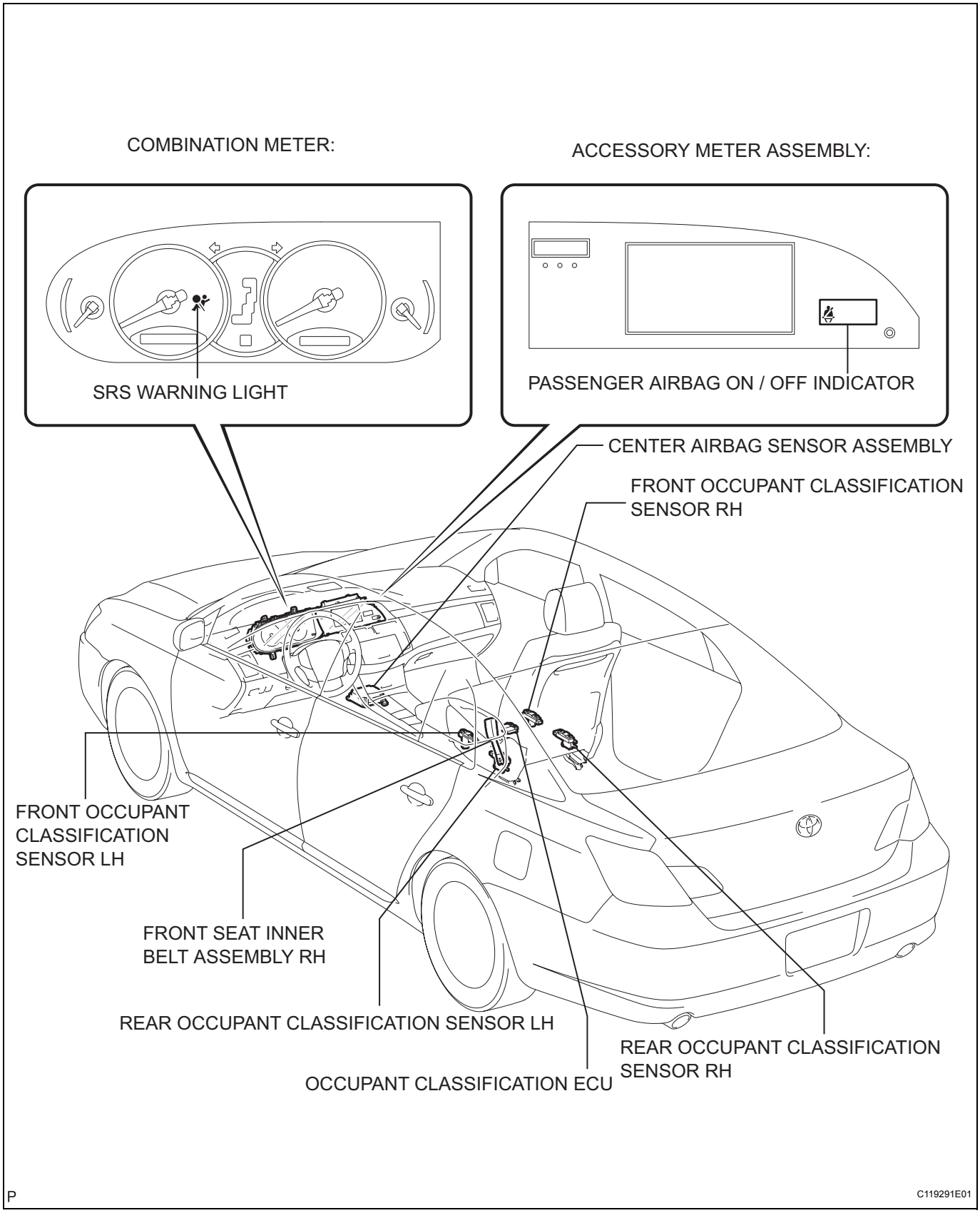

STARTING SYSTEM

PARTS LOCATION

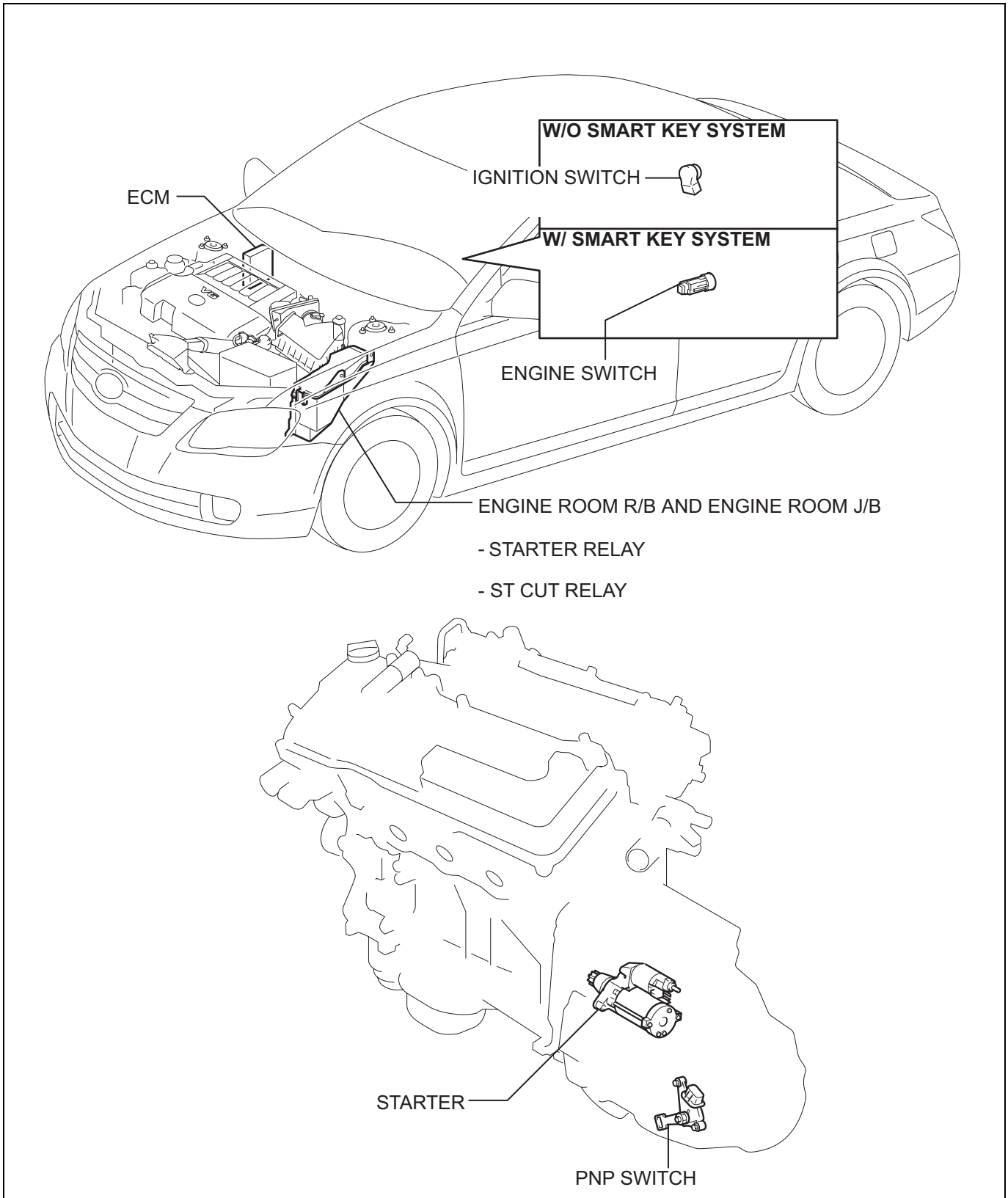

SYSTEM DIAGRAM

w/o Smart Key System:

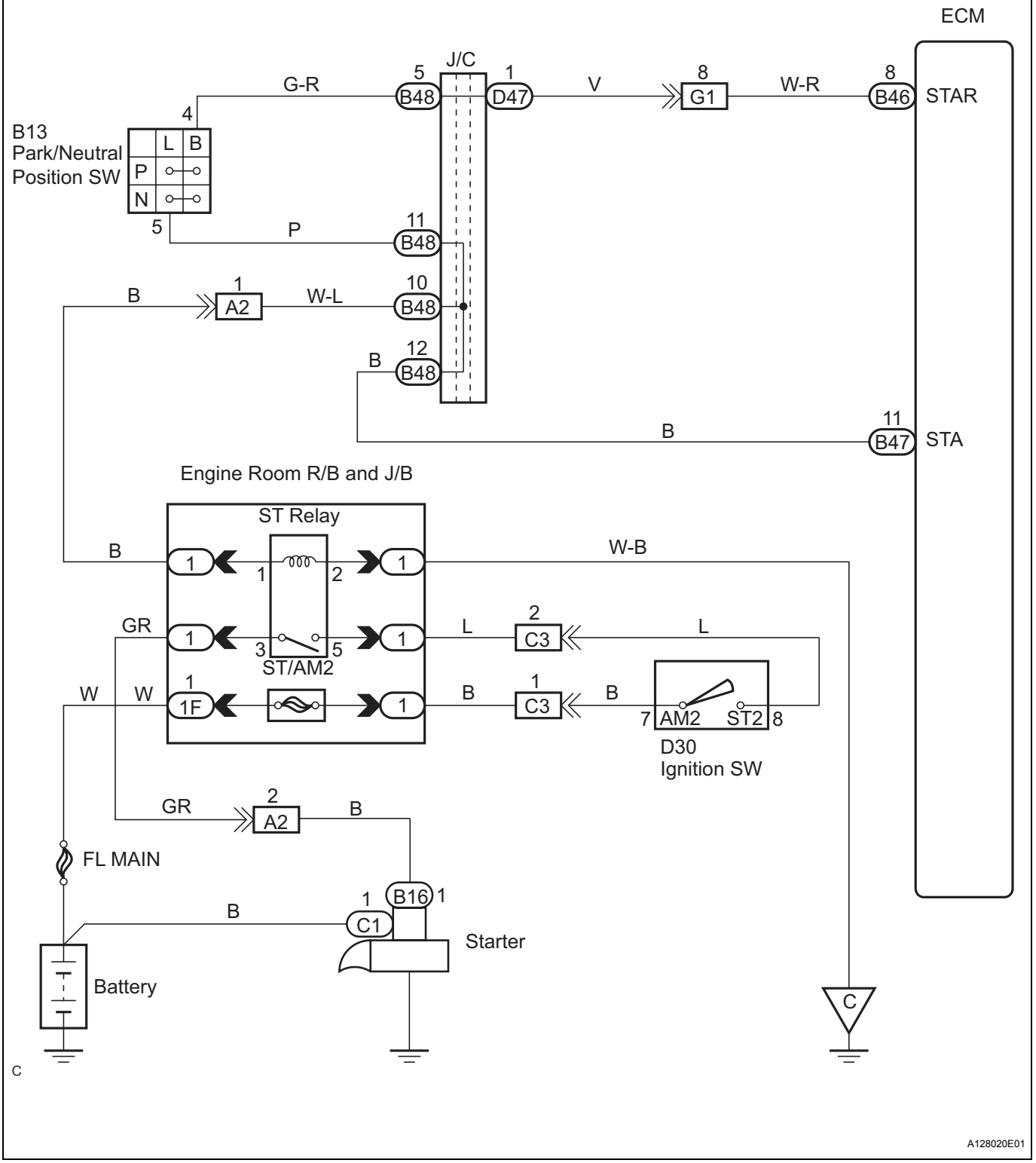

w/ Smart Key System:

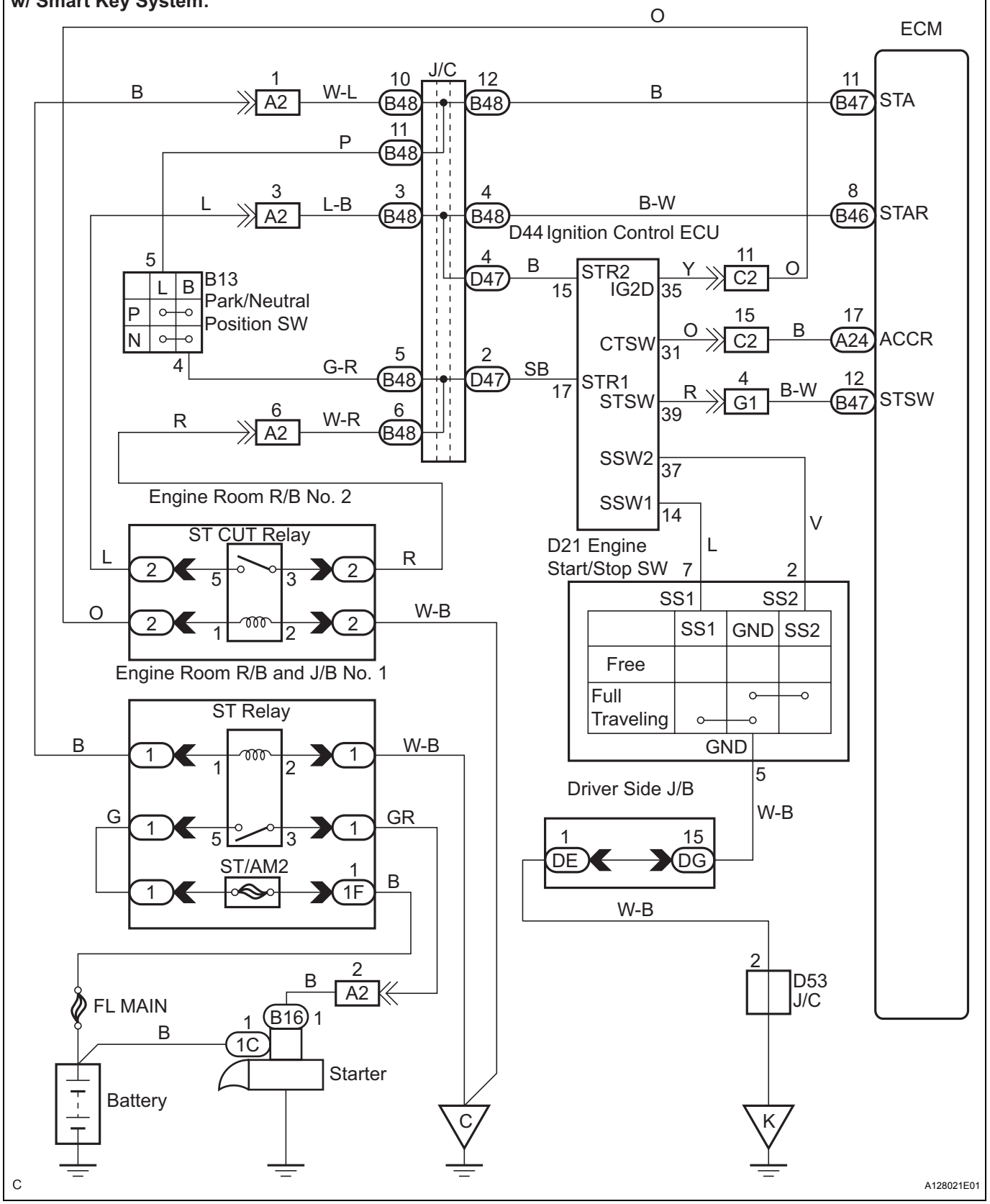

ST

ENTRY AND START SYSTEM

PRECAUTION

NOTICE:
When disconnecting the negative (-) battery terminal, initialize the following system(s) after the terminal is reconnected.

System	See procedure
Power Window Control System	IN-29
Sliding Roof Control System	

1. Precautions for the push button start function:

(a) Before starting the engine, firmly depress the brake pedal until the indicator of the engine switch lights up in green.

(b) The power source condition (OFF, ACC, ON) is always stored in the vehicle. After the battery is removed and reinstalled, the power source condition before battery removal will be restored. Be sure to turn the engine switch off before disconnecting the cable from the battery terminal. Always be aware of the power source condition before the battery dies or is removed.

(c) After the battery is removed and reinstalled, be sure to wait 10 seconds or more before engine start. The engine may not start immediately after the battery is reinstalled.

(d) If the key is held over the engine switch to start the engine because the key battery has died, the following warnings will sound:

(1) Driver's door open → close:
- Warning that the P position power remains on
- Warning that any of power for the shift positions other than P remains on

(2) Doors other than the driver's door open → close:
- Warning that any of the passengers is carrying the key out of the vehicle

These warnings will sound because whether the key is in the cabin or not cannot be determined. They do not indicate system malfunctions.

HOW TO PROCEED WITH TROUBLESHOOTING

HINT:

- Use this procedure to troubleshoot the push button start function.
- The intelligent tester should be used in steps 3, 4 and 6.
- When troubleshooting the push-button function using the intelligent tester with the engine switch off, connect the intelligent tester to the vehicle and repeat turning any of the courtesy light switches on and off until communication between the tester and the vehicle begins (the interval between ON and OFF should be less than 1.5 sec.).

1	**VEHICLE BROUGHT TO WORKSHOP**

NEXT

2	**CUSTOMER PROBLEM ANALYSIS CHECK AND SYMPTOM CHECK**

HINT:

See page IN-36

NEXT

3	**INSPECT COMMUNICATION FUNCTION OF MULTIPLEX COMMUNICATION SYSTEM (BEAN)**

(a) Use the intelligent tester to check for normal function of the multiplex communication system.
  (1) (ECU not connected, communication line malfunctioning) Without code outputs, proceed to A.
  (2) (ECU not connected, communication line malfunctioning) With code outputs, proceed to B.

B → **Go to MULTIPLEX COMMUNICATION SECTION**

A

4	**CHECK DTC**

(a) Check for DTCs and note any codes that are output.
(b) Delete the DTC.
  HINT:
  After DTCs are all cleared, check if the trouble occurs again 6 seconds after the engine switch is turned on (IG).
(c) Recheck for DTCs. Try to prompt the DTC by simulating the original activity that the DTC suggests.
  (1) If the DTC does not reoccur, proceed to A.
  (2) If the DTC reoccurs, proceed to B.

ST

B → DTC CHART

A

5	INSPECT BASIC OPERATION

(a) Turn the engine switch on (START) and check that the engine starts normally. Make sure the brake pedal is depressed and the shift position is in P at this time.
(b) Check that the engine switch mode can be changed by pushing the engine switch.
HINT:
Without depressing the brake pedal, push the engine switch repeatedly. Engine switch mode should turn from OFF to ON (ACC) to ON (IG) and back to OFF.
With the brake pedal depressed, push the engine switch repeatedly. Engine switch mode should turn to ENGINE START from any status.
OK:
Engine can start normally

NEXT

6	PROBLEM SYMPTOMS TABLE

(a) If the fault is not listed in the problem symptoms table, proceed to A.
(b) If the fault is listed in the problem symptoms table, proceed to B.

B → Go to step 8

A

7	OVERALL ANALYSIS AND TROUBLE SHOOTING

(a) Data List / Active Test (See page ST-22)
(1) Inspection with the intelligent tester (Data List)
(2) Inspection with the intelligent tester (Active Test)
(b) Terminal of ECU (See page ST-17)

NEXT

8	ADJUST, REPAIR OR REPLACE

NEXT

ST

9	CONFIRMATION TEST

NEXT

END

PARTS LOCATION

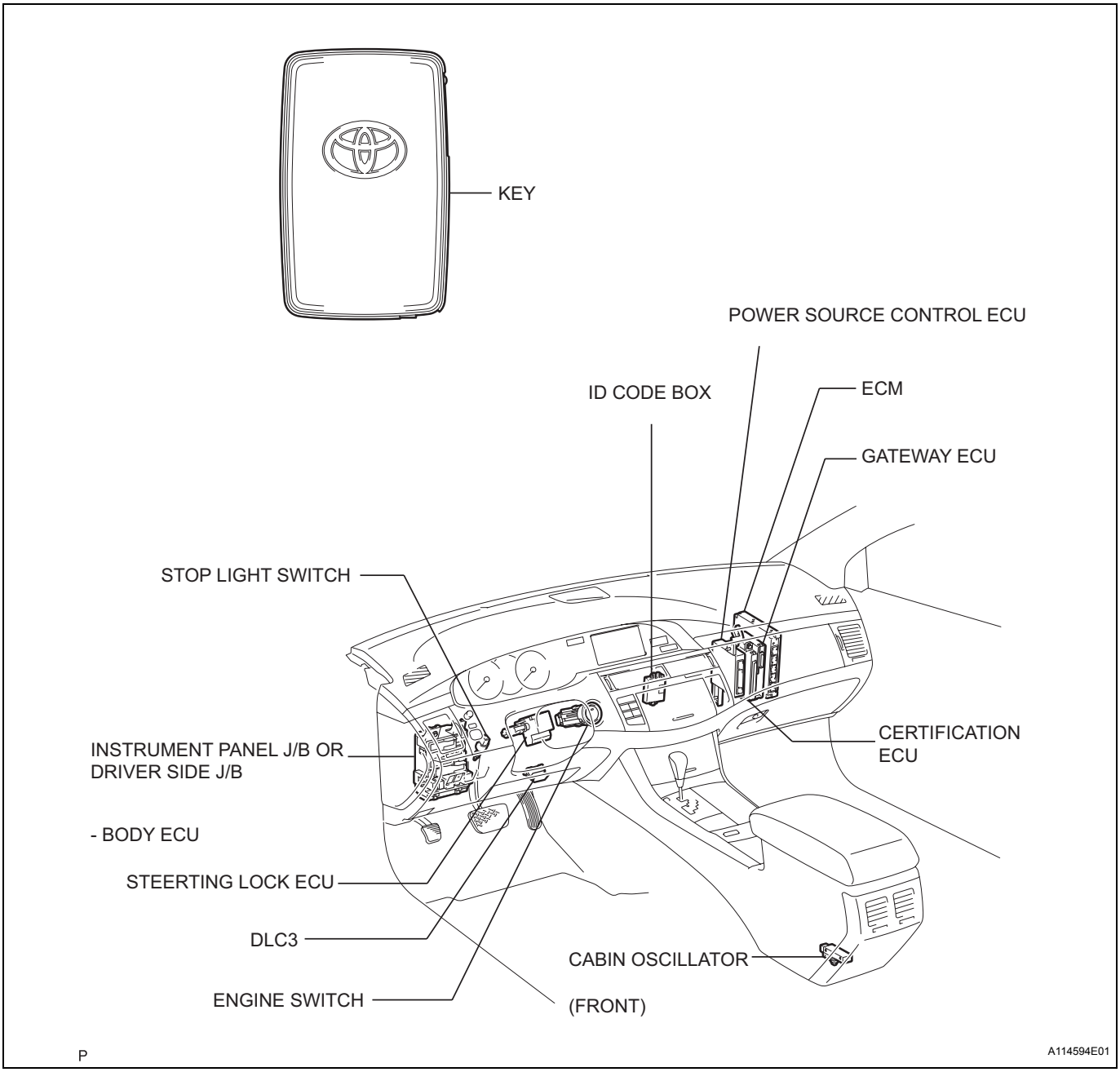

ST

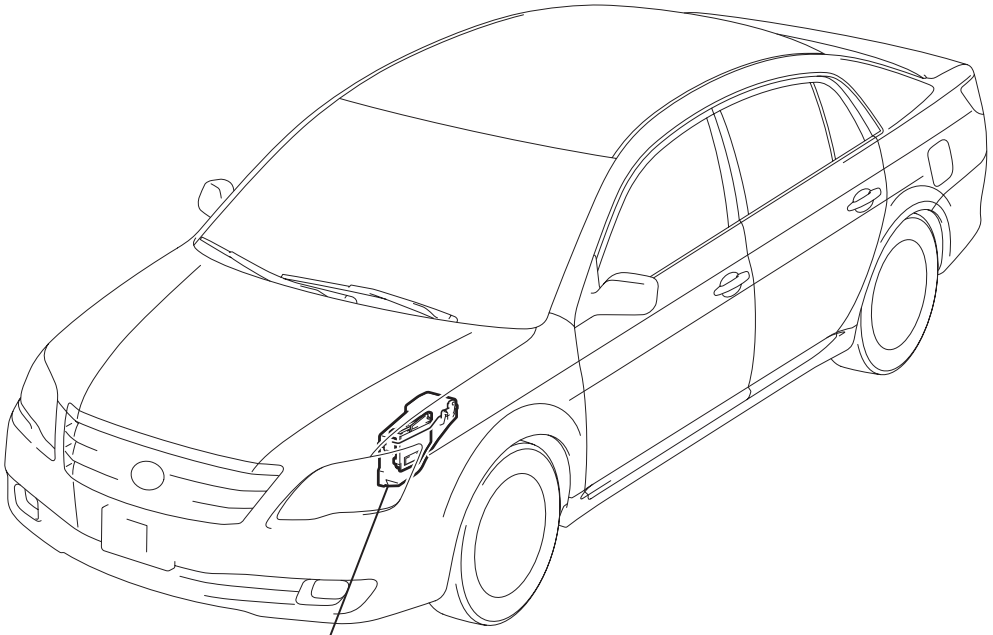

ENGINE ROOM R/B

- FRONT CONTROLLER

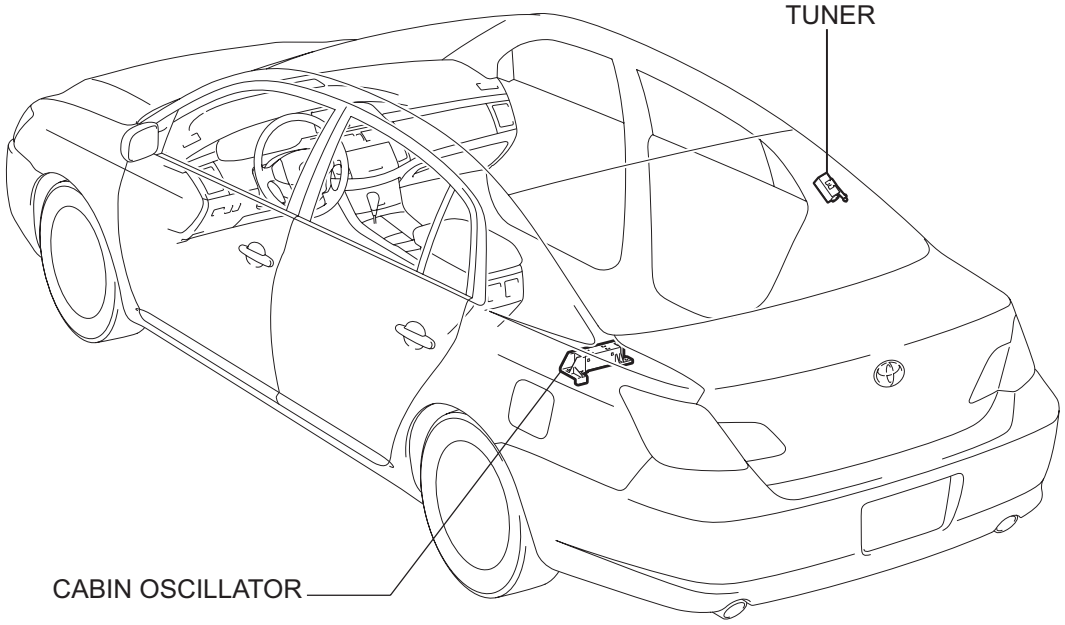

(REAR)

P

A114595E01

SYSTEM DIAGRAM

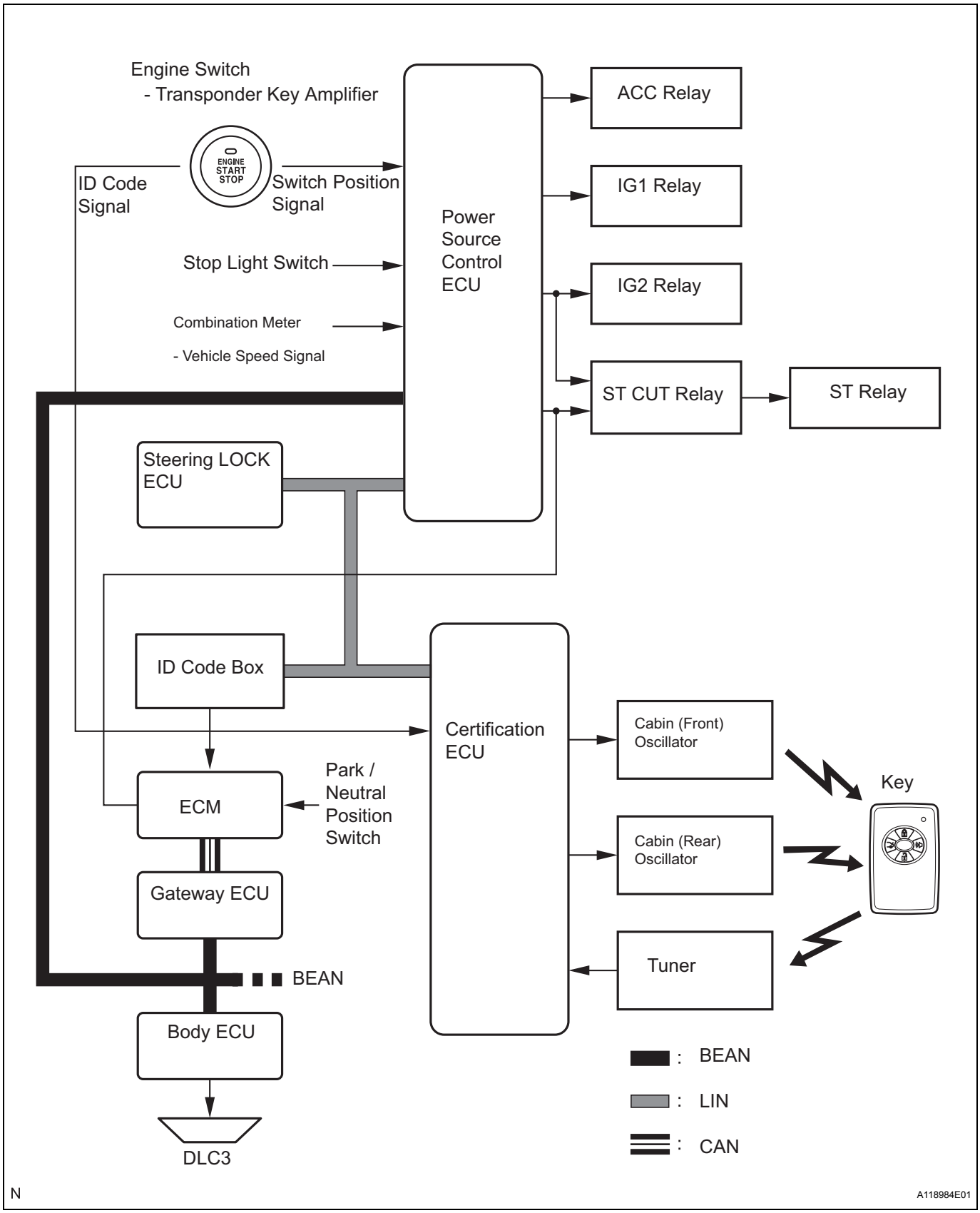

ST

Transmitting ECU (Transmitter)	Receiving ECU (Receiver)	Signals	Communication method
Combination meter	Power source control ECU	• Vehicle speed signal • Travel distance information	BEAN
Combination meter	Multi-display	• Door open warning signal • Shift position warning signal • Smart key system warning light signal	BEAN / AVC-LAN
Power source control ECU	Body ECU	• Security control signal	BEAN
Body ECU	Power source control ECU	• Engine start switch illumination signal • Stop light switch signal • Courtesy light switch signal • DTC erase signal • DTC response signal	BEAN
ECM	Power source control ECU	• Engine speed signal • Shift P position signal	BEAN / CAN

SYSTEM DESCRIPTION

1. PUSH BUTTON START DESCRIPTION

(a) The push button start system uses a push-type engine switch, which the driver operates by merely carrying the key. This system consists primarily of the power source control ECU, engine switch , ID code box, steering lock ECU, key, ACC relay, IG1 relay, IG2 relay and certification ECU. The power source control ECU controls the system. This function operates in cooperation with the smart key system.
The table below shows the transition of the engine switch, which depends on whether the brake pedal is depressed or released.

(b) This system has different power source mode patterns to suit the brake pedal condition and shift lever position.

Brake Pedal	Shift Lever	Power Source Mode Pattern
Depressed	P or N Position	When the engine switch is pushed once. – OFF → IG ON (after the engine is started)
Not Depressed	P Position	Each time the engine switch is pushed. – OFF → ACC → IG ON → OFF
	Except P Position	Each time the engine switch is pushed. – OFF → ACC → IG ON → ACC
-	P Position	When the engine switch is pushed in the IG-ON condition. – IG ON (engine is started or not started) → OFF
-	Except P Position	When the engine switch is pushed in the IG-ON condition. – IG ON (engine is started or not started) → ACC

ST

When the battery of the key is low, the push button start system can be made to function by holding the key against the engine switch.

2. FUNCTION OF COMPONENT

Components	Function
Engine switch (Transponder Key Amplifier)	• Transmits the engine switch signal to the power source control ECU. • Informs the driver of a power source mode or system abnormality with the illuminate stage of the indicator light. • Receives the ID code and transmits it to the certification ECU when the battery of the key is weak.
Key	Receives the signals from oscillators and returns the ID code to the tuner. For details, See page DL-135.
Room Oscillator (Front and Rear)	Receives a request signal from the certification ECU and forms the actuation area in the vehicle interior.
Tuner	Receives the ID code from the key and transmits it to certification ECU.
Power Source Control ECU	• Switches the power source modes in four modes (OFF, ACC, IG-ON, START) in accordance with the shift position and the state of the stop light switch. • Controls the push button start system in accordance with the signals received from the switches and each ECU.
Certification ECU	Certificates the ID code received from the tuner and transmits the certification results to the ID code box and Steering Lock ECU.
Stop Light Switch	Outputs the state of the brake pedal to the power source control ECU.
ID Code Box	Receives the steering unlock or engine immobilizer unset signals from the certification ECU, certifies them, and transmits each unset signal to the steering lock ECU or ECM.
ECM	• Receives the engine start request signal from the power source control ECU, turns ON the ST relay, and starts the engine. • Receive the signal from the ID code box and performs engine ignition and injection.

3. SYSTEM FUNCTION

(a) The electric controls of the push button start system are described below:

Control	Outline
Engine switch control	• When driver operates engine switch key in driver's possession, power source control ECU starts room oscillator, which transmits request signal to key. Upon receiving this signal, key transmits ID code signal to power source control ECU. • ID code box verifies check results received from certification ECU via LIN and sends them to power source control ECU. Based on these results, power source control ECU authorizes operation of power switch.
Diagnosis	When power source control ECU detects malfunction, power source control ECU diagnoses and memorizes failed section.

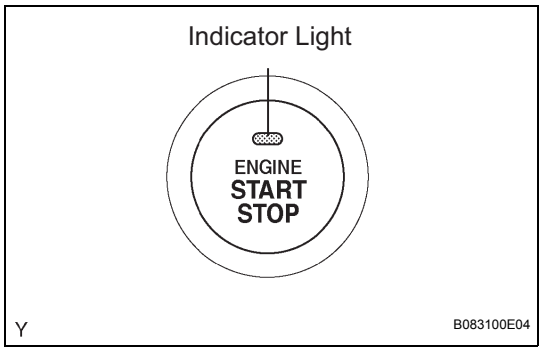

4. Construction and Operation

(a) Engine Switch

Engine switch consists of the momentary type switch, three color (Amber, Green, Greenish White) LEDs, and transponder key amplifier.

- The greenish white LED is for illumination.
- The amber and green LEDs are for the indicator lights. The driver can check the present power source mode and whether the engine can start or not in accordance with the illumination state of the indicator light.
- When the power source control ECU detects an abnormality in the push button start system, it makes the amber indicator light flash. If the engine stopped in this state, it might not be possible to restart it.

(b) Indicator Light Condition

Power Source Mode / Condition	Indicator Light Condition	
	No brake pedal depressed	Brake pedal depressed with shift lever in "P" or "N".
OFF	Turn OFF	Turn ON (Green)
ACC, IG-ON, START	Turn ON (Amber)	Turn ON (Green)
Engine Running	Turn OFF	Turn OFF
Steering lock not unlocked	Flash (Green) for 30 seconds	Flash (Green) for 30 seconds
Push Button Start System Malfunction	Flash (Amber) for 15 seconds	Flash (Amber) for 15 seconds

(c) Power Source Control ECU
Power Source Control ECU consists of the IG1 and IG2 relay actuation circuits, CPU and hold circuit.
(1) The hold circuit is installed to prevent the power supply to the relays from being cut off when an abnormality occurs in IG1 and / or IG2 relay actuation circuits during driving.

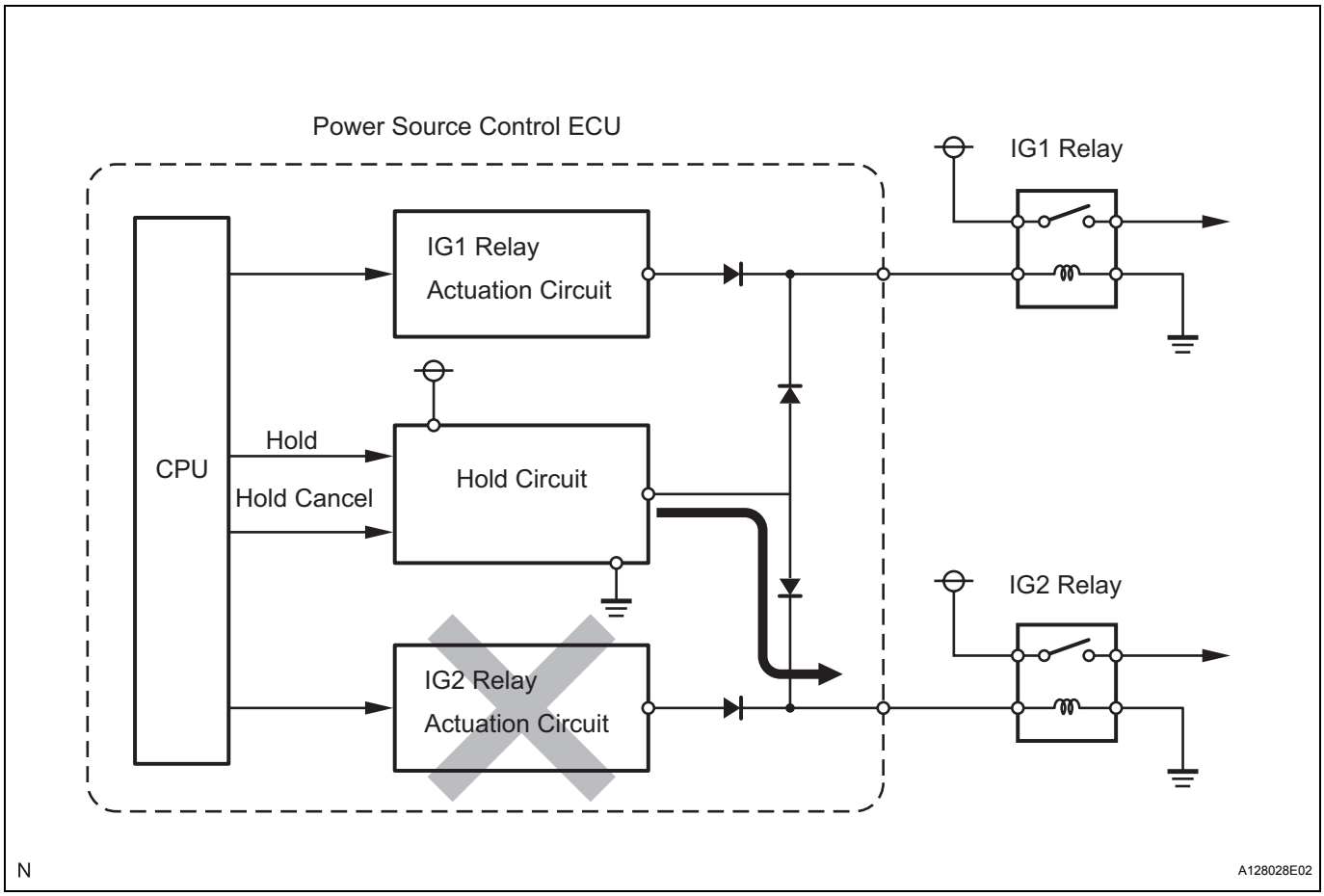

HINT:
Power source control ECU constantly stores the present power source mode in its memory. If the power to power source control ECU is interrupted due to the removal of the battery, power source control ECU restores the power source mode after the battery is reconnected.
If the battery is removed when the engine switch is not off, the power will be restored to the vehicle at the same time the power is restored to Power Source Control ECU (by reconnecting the battery).
Therefore, before removing the battery, make sure to turn the engine switch off.

ST

5. Push Button Start Function Operating

(a) This system has different power source mode patterns to suit the brake pedal condition and shift lever position.

Brake Pedal	Shift Lever	Power Source Mode Pattern
Depressed	P or N Position	When the engine switch is pushed once. – OFF → IG ON (after the engine is started)
Not Depressed	P Position	Each time the engine switch is pushed. – OFF → ACC → IG ON → OFF
	Except P Position	Each time the engine switch is pushed. – OFF → ACC → IG ON → ACC
-	P Position	When the engine switch is pushed in the IG-ON condition. – IG ON (engine is started or not started) → OFF
-	Except P Position	When the engine switch is pushed in the IG-ON condition. – IG ON (engine is started or not started) → ACC

When the battery of the key is low, the push button start system can be made to function by holding the key against the engine switch.

(1) After approximately 1 hour has passed with the engine switch on (ACC) and the shift position in P, the power source control ECU will automatically turn off the power (the engine switch mode changes to OFF).

(2) The illustration below shows the transition of engine switch modes.

Transition of engine switch mode:

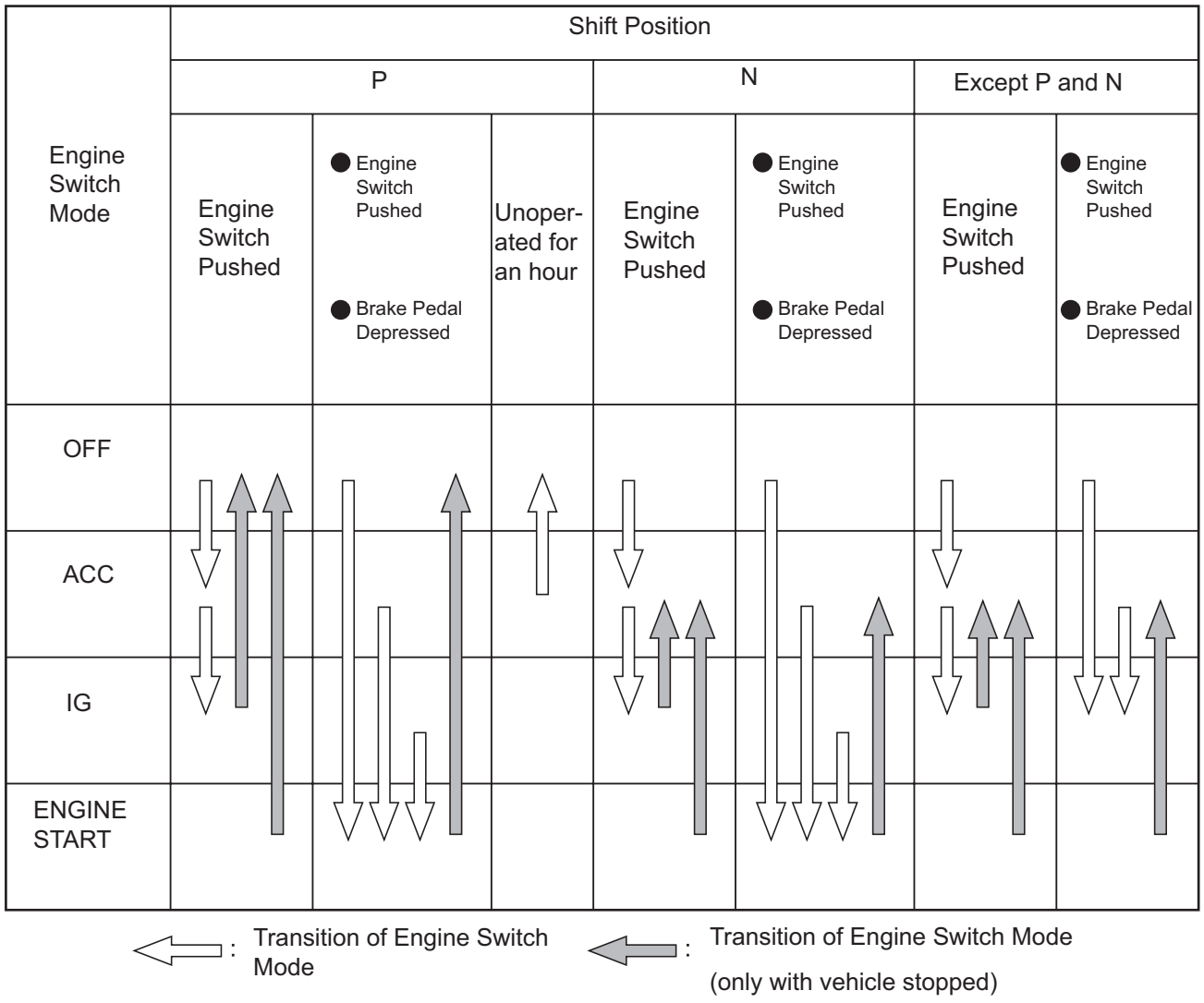

N

A128029E01

HINT:
While the vehicle is being driven normally, operation of the engine switch is disabled. However, if the engine must be stopped in an emergency while the vehicle is being driven, pressing the engine switch for at least 3 seconds can stop the engine. Engine switch mode changes from ENGINE START to ACC.

6. When key battery is low

(a) To operate the push button start system when the key battery is low, hold the TOYOTA mark of the key against the engine switch while depressing the brake pedal.

ST

(b) The power source control ECU transmits a key verification request signal from the stop light switch signal to the certification ECU.
(c) The certification ECU does not receive an ID code response from the smart tuner, so it actuates the transponder key amplifier built into the engine switch.
(d) The transponder key amplifier outputs an engine immobilizer radio wave to the key.
(e) The key receives the radio wave, and returns a radio wave response to the transponder key amplifier.
(f) The transponder key amplifier combines the key ID codes with the radio wave response, and transmits it to the certification ECU.
(g) Certification ECU judges and verifies the ID code, and transmits a key verification OK signal to the power source control ECU. The buzzer in the combination meter sounds at the same time.
(h) After the buzzer sounds, if the engine switch is pressed within five seconds while the brake pedal is not depressed, the power source mode switches to ACC or IG, the same as in the normal condition.

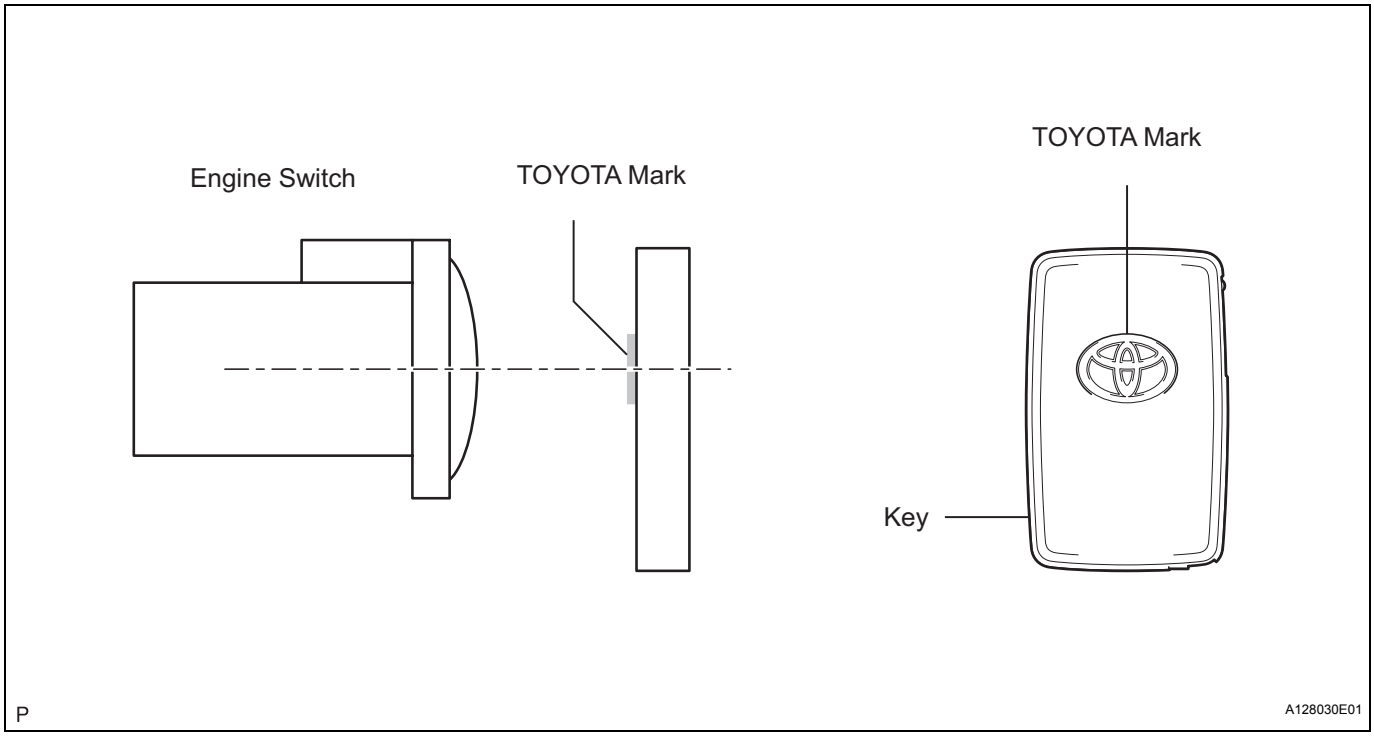

7. DIAGNOSIS

(a) Power source control ECU can detect malfunctions in the push button start system when the power source mode is IG.
When the ECU detects a malfunction, the amber indicator light of the engine switch flashes to warn the driver. At the same time, the ECU stores the 5-digit DTC (Diagnostic Trouble Code) in the memory.
- The indicator light warning continues for 15 seconds even when the power source mode is switched to OFF.
- The DTC can be read by connecting an intelligent tester to the DLC3.
- The push button start system cannot be operated again if a malfunction occurs.

PROBLEM SYMPTOMS TABLE

HINT:
If a normal system code is displayed during the DTC check but the problem still occurs, check the circuits for each problem symptom in the order given in the table below and proceed to the relevant troubleshooting page.

ENTRY AND START SYSTEM

Symptom	Suspected area	See page
Engine switch does not turn on (IG and ACC)	1. Smart key system operation inspection (on the seat)	DL-178
	2. AM1 and AM2 circuit (B2271)	ST-25
	3. Engine switch circuit (B2278)	ST-45
	4. Ground circuit (Power source control ECU - Body ground)	ST-17
	5. Replace power source control ECU	-
Engine switch does not turn on (ACC)	1. AM1 and AM2 circuit (B2271)	ST-25
	2. ACCD circuit (B2274)	ST-35
	3. Ground circuit (Power source control ECU - Body ground)	ST-17
	4. Replace power source control ECU	-
Engine switch does not turn on (IG)	1. AM1 AM2 circuit (B2271)	ST-25
	2. IG1D circuit (B2272)	ST-27
	3. IG2D circuit (B2273)	ST-32
	4. Ground circuit (Power source control ECU - Body ground)	ST-17
	5. Replace power source control ECU	-
Engine switch does not turn on (START)	1. Stop light switch circuit (B2284)	ST-54
	2. Starter relay circuit	ST-68
	3. SFI system	ES-30
	4. Replace power source control ECU	-
Engine switch indicator light does not come on	Engine switch indicator light circuit	ST-65

TERMINALS OF ECU

1. CHECK POWER SOURCE CONTROL ECU ASSEMBLY

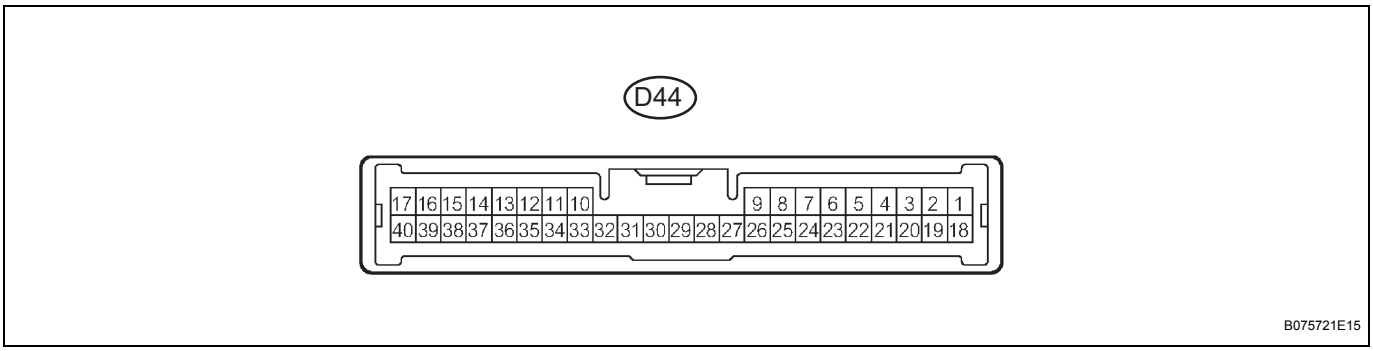

(a) Disconnect the D44 ECU connector.
(b) Measure the resistance and voltage of the wire harness side connector.

Standard

Symbols (Terminal No.)	Wiring Color	Terminal Description	Condition	Specified Condition
AM1 (D44-33) - Body ground	W - Body ground	+B power supply	Always	10 to 14 V
AM2 (D44-12) - Body ground	L - Body ground	+B power supply	Always	10 to 14 V
SSW1 (D44-14) - Body ground	L - Body ground	Engine switch signal	Engine switch pushed → Not pushed	Below 1 Ω → 10 kΩ or higher
SSW2 (D44-37) - Body ground	V - Body ground	Engine switch signal	Engine switch pushed → Not pushed	Below 1 Ω → 10 kΩ or higher
GND2 (D44-6) - Body ground	W-B - Body ground	Ground	Always	Below 1 Ω
MPX1 (D44-7) - Body ground	B - Body ground	MPX line	Always	10 kΩ or higher
MPX2 (D44-24) - Body ground	LG - Body ground	MPX line	Always	10 kΩ or higher
LIN1 (D44-30) - Body ground	BR - Body ground	LIN line	Always	10 kΩ or higher

If the result is not as specified, there may be a malfunction on the wire harness side.
(c) Reconnect the D44 ECU connector.
(d) Measure the voltage of the connector.

Voltage

Symbols (Terminal No.)	Wiring Color	Terminal Description	Condition	Specified Condition
ACCD (D44-11) - GND2 (D44-6)	R - W-B	ACC signal	Engine switch OFF → Engine switch ON (ACC)	Below 1 V → 10 to 14 V
IG1D (D44-34) - GND2 (D44-6)	LG - W-B	IG1 signal	Engine switch ON(ACC) → Engine switch ON (IG)	Below 1 V → 10 to 14 V
IG2D (D44-35) - GND2 (D44-6)	Y - W-B	IG2 signal	Engine switch ON(ACC) → Engine switch ON (IG)	Below 1 V → 10 to 14 V
STP (D44-1) - GND2 (D44-6)	P - W-B	Stop light signal	Brake pedal depressed → Released	10 to 14 V → Below 1 V
SLR+ (D44-32) - GND2 (D44-6)	BR - W-B	Power source for steering lock actuator	Steering lock motor operate → not operate	Below 1 V → 10 to 14 V
SLP (D44-26) - GND2 (D44-6)	GR - W-B	Steering lock actuator UNLOCK position signal	Steering is locked → released	10 to 14 V → Below 1 V

ST

Symbols (Terminal No.)	Wiring Color	Terminal Description	Condition	Specified Condition
SPD (D44-19) - GND2 (D44-6)	W - W-B	Vehicle speed signal	Engine switch ON (IG), Rotate driving wheel slowly	Pulse generation
TACH (D44-2) - Body ground	L - Body ground	Engine revolution speed signal	Idling	Pulse generation (see waveform 1)
P (D44-5) - Body ground	P - Body ground	Shift lock signal	Shift lever P position → D position	Below 1 V → 10 to 14 V
CTSW (D44-31) - Body ground	O - Body ground	Starter assist signal	Brake pedal depressed, Engine switch ON (START)	(*1) Below 1 V
STSW (D44-39) - Body ground	R - Body ground	Starter activation request signal	Brake pedal depressed, Engine switch ON (START)	(*2) 10 to 14 V
STR1 (D44-17) - GND2 (D44-6)	SB - W-B	Park / neutral position switch	Shift lever P or N position, Engine switch ON (START)	10 to 14 V
STR2 (D44-15) - GND2 (D44-6)	B - W-B	Starter signal	Shift lever P or N position, Engine switch ON (START)	10 to 14 V
INDS (D44-4) - Body ground	Y - Body ground	Vehicle condition signal	Brake pedal depressed, Shift lever P or N position, Engine switch ON (ACC, IG, START)	10 to 14 V
INDW (D44-13) - Body ground	GR - Body ground	Warning signal	Smart key system malfunction	Pulse generation
SWIL (D44-36) - Body ground	R - Body ground	Illumination signal	Light control switch TAIL or HEAD	10 to 14 V

*1: Voltage is output only when the engine is cranking.
*2: Voltage is output for 0.3 seconds after engine start.
If the result is not as specified, the ECU may have a malfunction.

(1) WAVEFORM 1
Engine speed signal

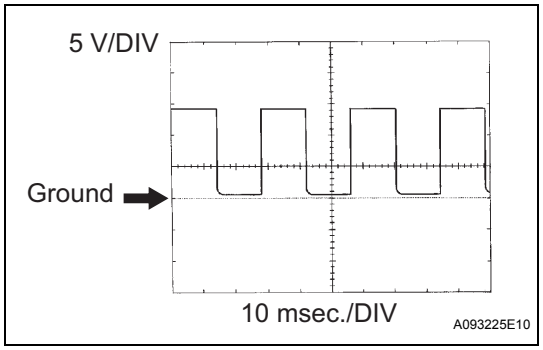

ECM Terminal Names	Between TACH and E1
Tester Ranges	5V/DIV, 10 msec./DIV
Conditions	Idling

HINT:
The wavelength becomes shorter as the engine rpm increases.

2. CHECK CERTIFICATION ECU

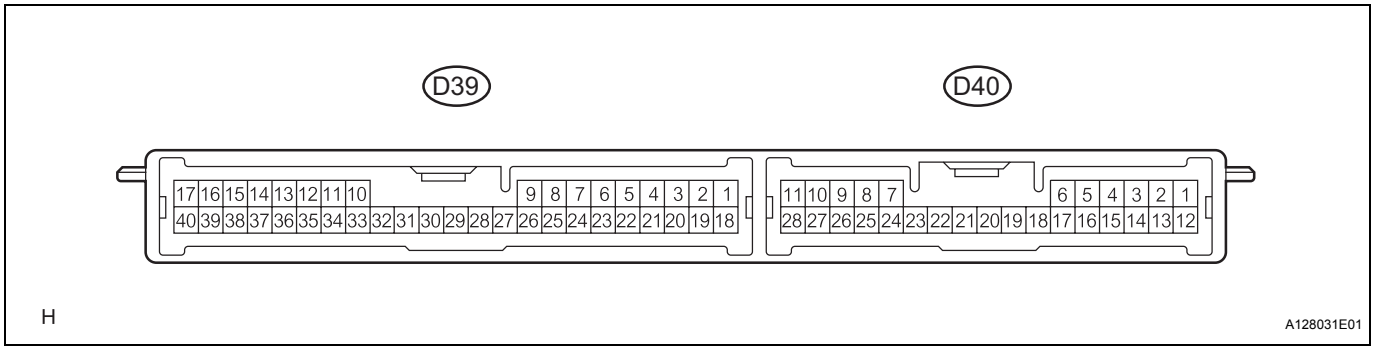

(a) Disconnect the D39 ECU connector.

(b) Measure the resistance of the wire harness side connector.

Resistance

Symbols (Terminal No.)	Wiring Color	Terminal Description	Condition	Specified Condition
LIN (D39-10) - E (D39-17)	BR - W-B	LIN line	Always	Below 1 Ω
E (D39-17) - Body ground	W-B - Body ground	Ground	Always	Below 1 Ω

If the result is not as specified, there may be a malfunction on the wire harness side.

(c) Reconnect the D39 ECU connector.

(d) Measure the voltage of the connector.

Voltage

Symbols (Terminal No.)	Wiring Color	Terminal Description	Condition	Specified Condition
+B1 (D39-1) - E (D39-17)	R - W-B	Battery	Always	10 to 14 V
IG (D39-18) - E (D39-17)	Y - W-B	Engine switch (IG)	Engine switch OFF → ON (IG)	Below 1 V → 10 to 14 V
ACC (D39-19) - E (D39-17)	SB - W-B	Engine switch (ACC)	Engine switch OFF → ON (ACC)	Below 1 V → 10 to 14 V

If the result is not as specified, the ECU may have a malfunction.

3. CHECK ECM

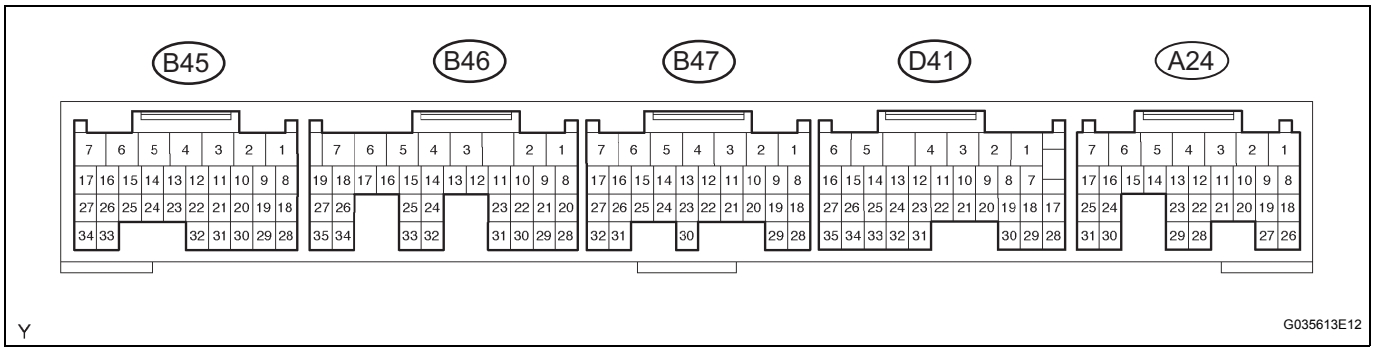

(a) Disconnect the A24 and B45 ECM connectors.

(b) Measure the resistance and voltage of the connectors.

Standard

Symbols (Terminal No.)	Wiring Color	Terminal Description	Condition	Specified Condition
+B (A24-1) - E1 (B47-1)	L - BR	Power source of ECM	Engine switch ON (IG)	10 to 14 V
+B2 (A24-2) - E1 (B47-1)	R - BR	Power source of ECM	Engine switch ON (IG)	10 to 14 V
IGSW (A24-9) - E1 (B47-1)	Y - BR	Ignition switch signal	Engine switch ON (IG)	10 to 14 V
E01 (B45-7) - Body ground	W-B - Body ground	Earth (ground) circuit of ECM	Always	Below 1 Ω
E1 (B47-1) - Body ground	BR - Body ground	Earth (ground) circuit of ECM	Always	Below 1 Ω

If the result is not as specified, there may be a malfunction on the wire harness side.

(c) Reconnect the A24 and B45 ECM connectors.

(d) Measure the voltage of the connectors.

Voltage

Symbols (Terminal No.)	Wiring Color	Terminal Description	Condition	Specified Condition
STA (B47-11) - E1 (B47-1)	B - BR	Starter relay operation signal	Cranking	10 to 14 V
ACCR (A24-17) - E1 (B47-1)	B - BR	ACC relay cut signal output	Engine switch ON (IG)	10 to 14 V
TACH (D41-1) - E1 (B47-1)	W - BR	Engine revolution start control signal output	Idling	Pulse generation
STP (B24-15) - E1 (B47-1)	W - BR	Stop light switch signal input	Brake pedal depressed → Brake pedal released	7.5 to 14 V → Below 1.5V
STAR (B46-8) - E1 (B47-1)	W - BR	PNP switch signal input	Engine switch ON	10 to 14 V

If the result is not as specified, the ECM may have a malfunction.

4. CHECK STEERING LOCK ACTUATOR ASSEMBLY (STEERING LOCK ECU)

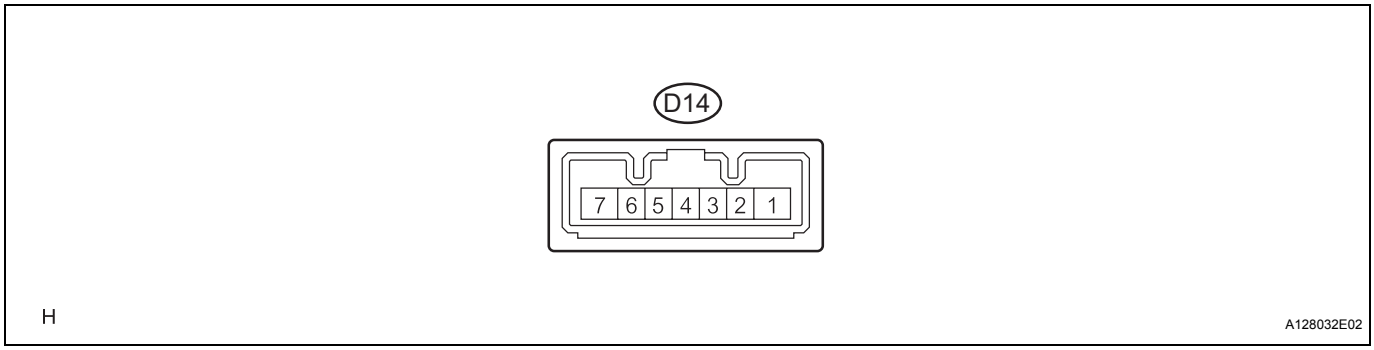

(a) Disconnect the D14 actuator connector.
(b) Measure the resistance and voltage of the wire harness side connector.

ST

Standard

Symbols (Terminal No.)	Wiring Color	Terminal Description	Condition	Specified Condition
B (D14-7) - Body ground	B - Body ground	+B power supply	Always	10 to 14 V
GND (D14-1) - Body ground	W-B - Body ground	Ground	Always	Below 1 Ω
SGND (D14-2) - Body ground	W-B - Body ground	Ground	Always	Below 1 Ω
LIN (D14-5) - Body ground	R - Body ground	LIN line	Always	10 kΩ or higher

If the result is not as specified, the actuator may have a malfunction.

(c) Reconnect the D14 ECU connector.
(d) Measure the voltage of the connectors.

Symbols (Terminal No.)	Wiring Color	Terminal Description	Condition	Specified Condition
IG2 (D14-6) - Body ground	V - Body ground	Ignition power supply	Engine switch ON (IG)	10 to 14 V
SLP1 (D14-4) - GND (D14-1)	GR - W-B	Steering lock actuator UNLOCK position signal	Steering is locked → released	Below 1 V → 10 to 14 V
IGE (D14-3) - GND (D14-1)	BR - W-B	Power source for steering lock actuator	Steering lock motor operate → not operate	Below 1 V → 10 to 14 V

DIAGNOSIS SYSTEM

1. DESCRIPTION

(a) Push button start system data and its Diagnostic Trouble Code (DTCs) can be read in the Data Link Connector 3 (DLC3) of the vehicle. When the system seems to be malfunctioning, use the intelligent tester to check for malfunctions and perform repairs.

2. CHECK DLC3

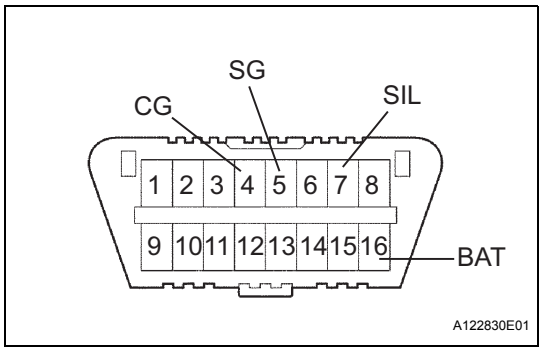

(a) Check the DLC3.

HINT:

The vehicle's ECU uses the ISO 9141-2 communication protocol. The terminal arrangement of the DLC3 complies with SAE J1962 and matches the ISO 9142-2 format.

Symbols (Terminal No.)	Terminal Description	Condition	Specified Condition
SIL (7) - SG (5)	Bus "+" line	During transmission	Pulse generation
CG (4) - Body ground	Chassis ground	Always	Below 1 Ω
SG (5) - Body ground	Signal ground	Always	Below 1 Ω
BAT (16) - Body ground	Battery positive	Always	11 to 14 V

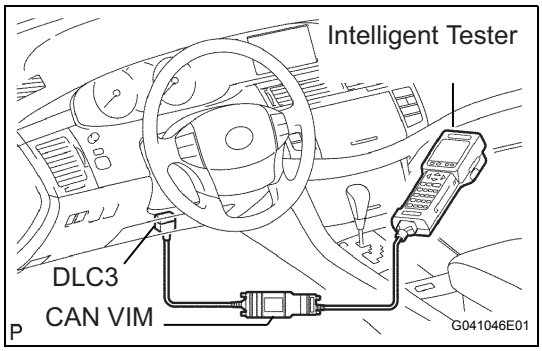

(b) When troubleshooting the push-button function using the intelligent tester with the engine switch off, connect the intelligent tester to the vehicle and repeat turning any of the courtesy light switches on and off until communication between the tester and the vehicle begins (the interval between ON and OFF should be less than 1.5 sec.).

(c) Connect the cable of the intelligent tester to the DLC3, turn the engine switch on (IG) and attempt to use the intelligent tester. If the display informs that a communication error has occurred, there is a problem either with the vehicle or with the tester.

HINT:

- If the communication is normal when the tester is connected to another vehicle, inspect the DLC3 on the original vehicle.
- If the communication is still impossible when the tester is connected to another vehicle, the problem is probably in the tester itself. Consult the Service Department listed in the tester's instruction manual.

3. INSPECT BATTERY VOLTAGE

(a) Inspect the battery voltage.

Voltage:

11 to 14 V

If voltage is below 11 V, recharge the battery before proceeding.

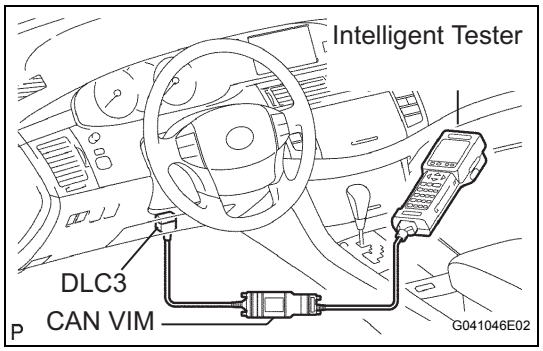

DTC CHECK / CLEAR

1. CHECK DTC

(a) Connect the intelligent tester to the DLC3.
(b) Turn the engine switch on (IG).
(c) Read the DTCs by following the directions on the tester's screen.
HINT:
Refer to the intelligent tester operator's manual for further details.

2. CLEAR DTC

(a) Connect the intelligent tester to the DLC3.
(b) Turn the engine switch on (IG).
(c) Erase the DTCs by following the directions on the tester's screen.
HINT:
Refer to the intelligent tester operator's manual for further details.

FAIL-SAFE CHART

1. POWER SOURCE CONTROL ECU

DTC No.	Item	Fail-safe Function	Fail-safe Deactivation Condition
B2283	Vehicle speed sensor circuit	Steering does not lock	"Pass" condition is detected

DATA LIST / ACTIVE TEST

1. DATA LIST

HINT:

Using the intelligent tester's Data List allows switch, sensor, actuator and other item values to be read without removing any parts. Reading the Data List early in troubleshooting is one way to save time.

(a) Connect the intelligent tester to the DLC3.
(b) Turn the engine switch on (IG).
(c) Read the Data List according to the display on the tester.

PWR SOURCE CTRL (Power source control)

Item	Measurement Item / Range (Display)	Normal Condition	Diagnostic Note
SHIFT P SIG	Status of shift P position switch / ON or OFF	ON: Shift Lever is P position OFF: Shift lever is non-P position	-
STR UNLOCK SW	Status of steering unlock switch / ON or OFF	ON: Steering unlock switch is UNLOCK OFF: Steering unlock switch is LOCK	-
STOP LAMP SW1	Status of stop light switch1 / ON or OFF	ON: Brake pedal pressed OFF: Brake pedal depressed	-
START SW1	Status of start switch1 / ON or OFF	ON: Engine switch is ON (IG) OFF: Engine switch is OFF	-
START SW2	Status of start switch2 / ON or OFF	ON: Engine switch is ON (IG) OFF: Engine switch is OFF	-
N SW / C SW	Status of Neutral SW / ON or OFF	ON: Shift Lever is N position OFF: Shift lever is non-N position	-
RATCH CIRCUIT	Status of ratch circuit / ON or OFF	ON: Engine switch is ON (IG) OFF: Engine switch is OFF or ON (ACC) or ON (START)	-
IG1 RELAY MON1	Status of IG1 relay monitor (outside) / ON or OFF	ON: Engine switch is ON (IG) OFF: Engine switch is OFF	-
IG1 RELAY MON2	Status of IG1 relay monitor (inside) / ON or OFF	ON: Engine switch is ON (IG) OFF: Engine switch is OFF	-
IG2 RELAY MON1	Status of IG2 relay monitor (outside) / ON or OFF	ON: Engine switch is ON (IG) OFF: Engine switch is OFF	-
IG2 RELAY MON2	Status of IG2 relay monitor (inside) / ON or OFF	ON: Engine switch is ON (IG) OFF: Engine switch is OFF	-
ST RELAY MON	Status of starter relay monitor / ON or OFF	ON: ST relay is ON OFF: ST relay is OFF	-
ST REQUEST SIG	Status of starter requesting signal monitor / ON or OFF	ON: ST relay is ON OFF: ST relay is OFF	-
ACC RELAY MON	Status of ACC relay monitor / ON or OFF	ON: Engine switch is ON (ACC) OFF: Engine switch is OFF	-
ACC CUT SIG	Status of ACC relay cut signal / ON or OFF	ON: Engine switch is OFF OFF: Engine switch is ON (ACC)	-
VEHICLE SPD SIG	Status of vehicle speed signal / STOP or RUN	ON: Vehicle is stopped OFF: Vehicle is running	-
E / G COND	Status of engine condition / STOP or RUN	ON: Engine is stopped OFF: Engine is running	When engine condition is rotating
PWR COND	Status of power supply condition / ALL, ACC ON, IG1, IG2, ST ON	ALL: All relay is ON ACC ON: ACC relay is ON IG1: IG1 relay is ON IG2: IG2 relay is ON ST ON: ST relay is ON	When ready signal allows to be capable driving
#CODE	Status of Number of diagnosis codes / min: 0, max: 255	-	-

ST

2. ACTIVE TEST

HINT:

Performing the intelligent tester's Active Test allows relay, VSV, actuator and other items to be operated without removing any parts. Performing the Active Test early in troubleshooting is one way to save time. The Data List can be displayed during the Active Test.

(a) Connect the intelligent tester to the DLC3.
(b) Turn the engine switch on (IG).
(c) Perform the Active Test according to the display on the tester.

PWR SOURCE CTRL (Power source control)

Item	Test Details	Diagnostic Note
LIGHTING IND	Indicator for lighting ON / OFF	-
IND CONDITION	Indicator for lighting Green / Amber / No Sig	-
STR LOCK PWR	Power supply for steering lock ON / OFF	-

DIAGNOSTIC TROUBLE CODE CHART

1. DTC CHECK

If a malfunction code is displayed during the DTC check, the suspected area listed for that code in the table below, and proceed to the relevant page.

ENTRY AND START SYSTEM

DTC No.	Detection Item	Trouble Area	See page
B2271	Ignition Hold Monitor Malfunction	1. Power source control ECU 2. AM2 fuse 3. Wire harness	ST-25
B2272	Ignition 1 Monitor Malfunction	1. Power source control ECU 2. IG1 relay 3. Wire harness	ST-27
B2273	Ignition 2 Monitor Malfunction	1. Power source control ECU 2. IG2 relay 3. Wire harness	ST-32
B2274	ACC Monitor Malfunction	1. Power source control ECU 2. ACC relay 3. Wire harness	ST-35
B2275	STSW Monitor Malfunction	1. Power source control ECU 2. ECM 3. Wire harness	ST-38
B2276	ACCR Signal Circuit Malfunction	1. Power source control ECU 2. ECM 3. Wire harness	ST-41
B2277	Detecting Vehicle Submersion	Power source control ECU	ST-44
B2278	Engine Switch Circuit Malfunction	1. Power source control ECU 2. Engine switch 3. Wire harness	ST-45
B2281	"P" Signal Malfunction (Cable-Information does not Match to Bean-Information)	1. Power source control ECU 2. Shift lock control ECU 3. Wire harness	ST-48
B2282	Vehicle Speed Signal Malfunction (Cable-Information does not Match to Bean-Information)	1. Power source control ECU 2. Combination meter assembly 3. Wire harness	ST-50
B2283	Vehicle Speed Sensor Malfunction	1. Speed sensor 2. Power source control ECU 3. Combination meter assembly 4. Skid control ECU 5. Each ECU 6. Wire harness	ST-50
B2284	Brake Signal Malfunction (Cable-Information does not Match to Bean-Information)	1. Power source control ECU 2. Stop light switch 3. Wire harness	ST-54
B2285	Steering Lock Position Signal Circuit Malfunction	1. Power source control ECU 2. Steering lock actuator (steering lock ECU) 3. Wire harness	ST-57
B2286	Runnable Signal Malfunction	1. Power source control ECU 2. ECM 3. Wire harness	ST-60
B2287	LIN Communication Master Malfunction	1. Power source control ECU 2. Certification ECU 3. Wire harness	ST-63
B2288	Steering Lock Signal Circuit Malfunction	1. Power source control ECU 2. Steering lock actuator (steering lock ECU) 3. Wire harness	ST-57
B2289	Key Collation Waiting Time Over	1. Power source control ECU 2. Certification ECU 3. Wire harness	ST-63

DTC	B2271	Ignition Hold Monitor Malfunction

DESCRIPTION

This DTC is output when the IG output circuits inside the power source control ECU are open or short.

DTC No.	DTC Detection Condition	Trouble Area
B2271	Hold circuit, IG1 relay actuation circuit or IG2 relay actuation circuit inside power source control ECU is malfunctioning	• Power source control ECU • AM2 fuse • Wire harness

WIRING DIAGRAM

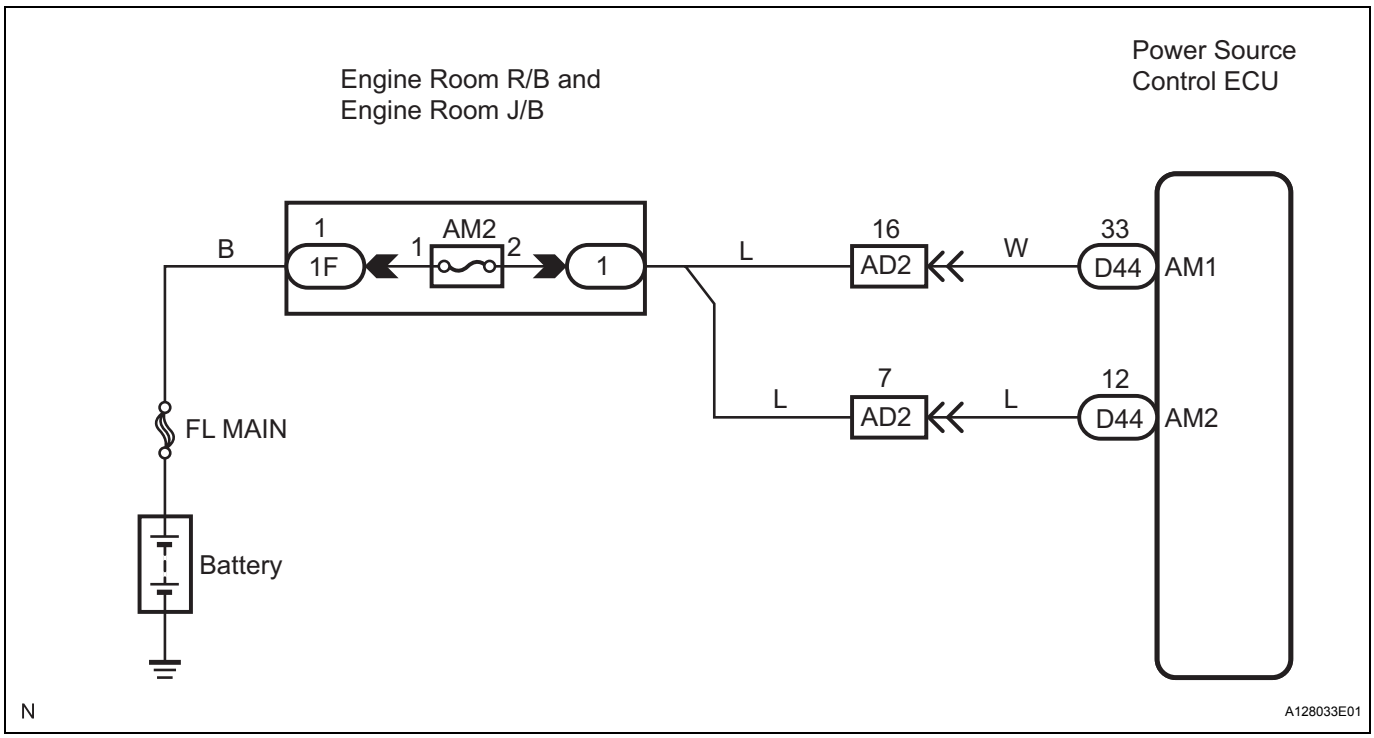

INSPECTION PROCEDURE

1	CHECK DTC OUTPUT

(a) Delete the DTC (See page ST-22).
HINT:
After all DTCs are cleared, check if the trouble occurs again 6 seconds after the engine switch is turned on (IG).

(b) Check for DTCs again.
OK:
No DTC is output.

NG → **Go to step 2**

OK

END

2	INSPECT FUSE (AM2)

(a) Remove the AM2 fuse from the engine room J/B.
(b) Measure the resistance of the fuse.
Resistance:
Below 1 Ω

NG → **REPLACE FUSE**

OK

3	CHECK WIRE HARNESS (POWER SOURCE CONTROL ECU - BATTERY)

Power Source Control ECU:

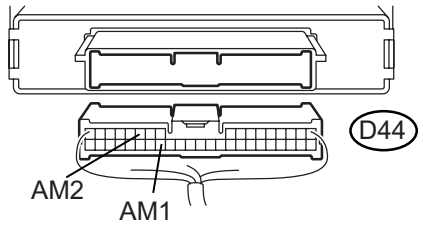

(a) Disconnect the D44 ECU connector.
(b) Measure the voltage according to the value(s) in the table below.
Voltage

Terminal No. (Symbol)	Specified Condition
D44-33 (AM1) - Body ground	10 to 14 V
D44-12 (AM2) - Body ground	10 to 14 V

NG → **REPAIR OR REPLACE HARNESS OR CONNECTOR**

OK

REPLACE POWER SOURCE CONTROL ECU

ST

DTC	B2272	Ignition 1 Monitor Malfunction

DESCRIPTION

This DTC is output when the IG output circuit from the inside the power source control ECU to the IG1 relay is malfunctioning.

DTC No.	DTC Detection Condition	Trouble Area
B2272	IG1 relay actuation circuit inside power source control ECU or other related circuits is malfunctioning	• Power source control ECU • IG1 relay • Wire harness

WIRING DIAGRAM

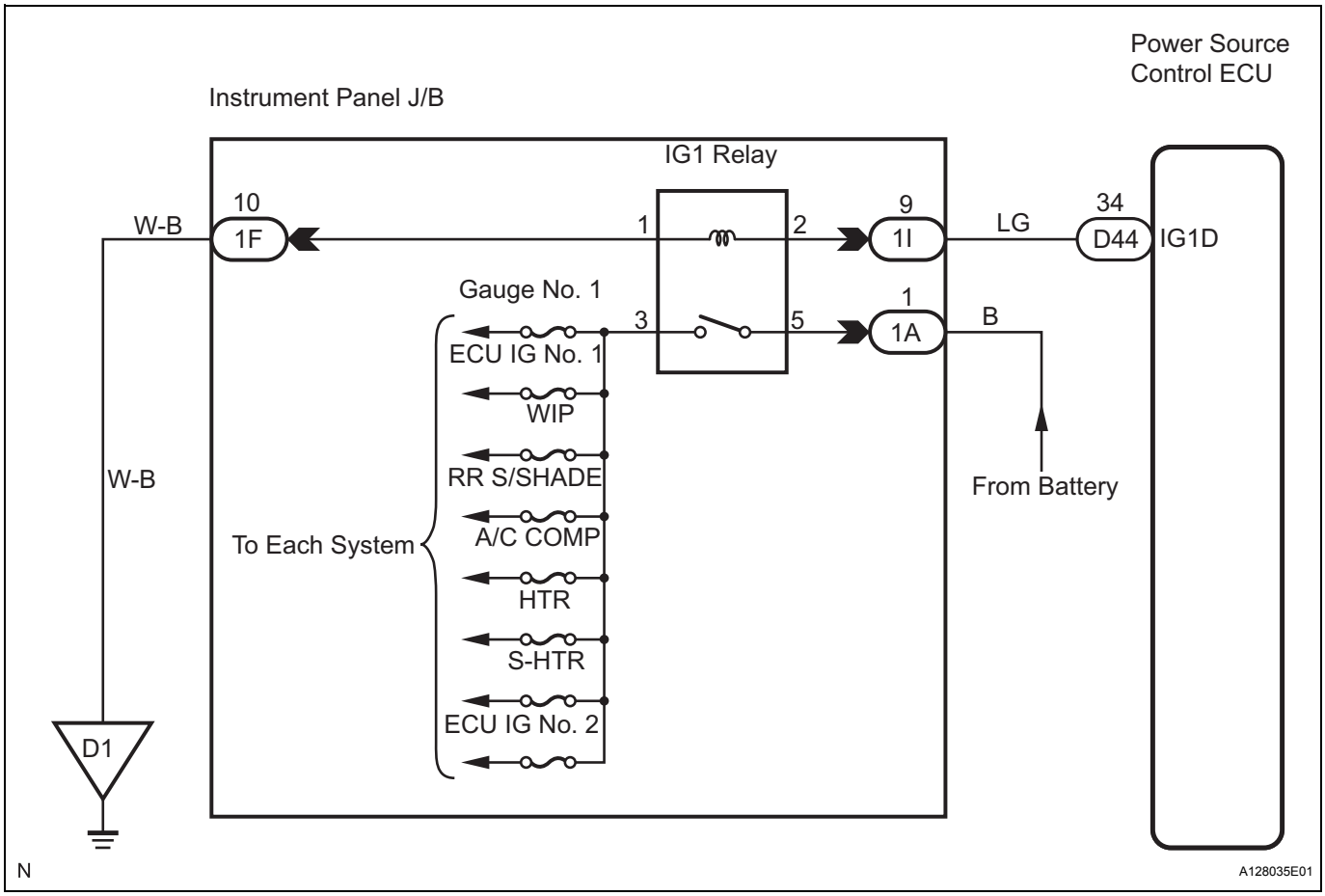

INSPECTION PROCEDURE

1	READ VALUE OF INTELLIGENT TESTER

(a) Connect the intelligent tester to the DLC3.
(b) Turn the engine switch on (IG) and press the intelligent tester main switch on.

(c) Select the items below in the Data List, and read the displays on the tester.

PWR SOURCE CTRL (Power source control ECU):

Item	Measurement Item / Display (Range)	Normal Condition	Diagnostic Note
IG1 RELAY MON1	Status of IG1 relay monitor (outer) / ON or OFF	ON: Engine switch ON (IG1 relay is ON) OFF: Engine switch OFF (IG1 relay is OFF)	-

OK:
"OK" (engine switch on (IG)) appears on the screen.

Result

Condition	Proceed to
NG	C
OK (When troubleshooting according to the PROBLEM SYMPTOM TABLE)	B
OK (When troubleshooting according to the DTC chart)	A

B → **PROCEED TO NEXT CIRCUIT INSPECTION SHOWN IN PROBLEM SYMPTOMS TABLE**

C → **Go to step 2**

A

REPLACE POWER SOURCE CONTROL ECU

ST

2 INSPECT RELAY (Marking: IG1)

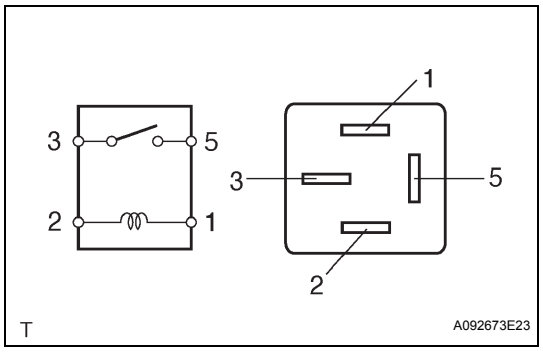

(a) Remove the IG1 relay from the instrument panel J/B.
(b) Measure the resistance according to the value(s) in the table below.

Resistance

Tester Connection	Specified Condition
3 - 5	10 kΩ or higher
3 - 5	Below 1 Ω (when battery voltage is applied to terminals 1 and 2)

NG → **REPLACE RELAY**

OK

3	CHECK WIRE HARNESS (INSTRUMENT PANEL J/B - POWER SOURCE CONTROL ECU)

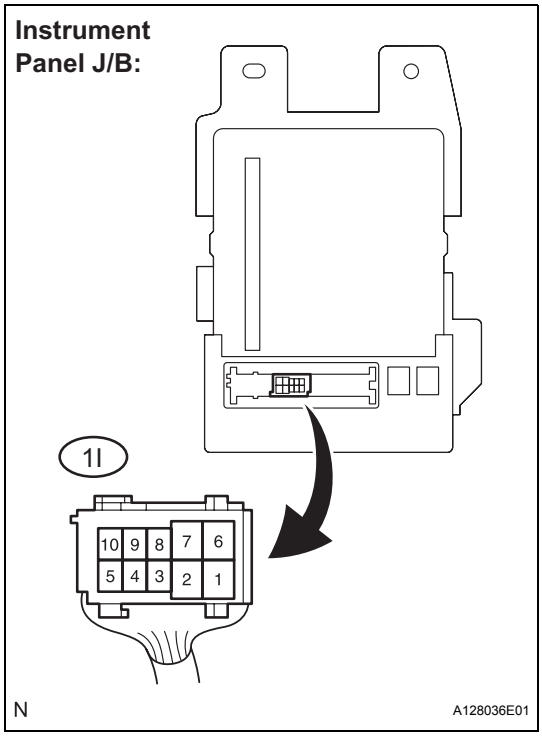

(a) Disconnect the 1I J/B connector.

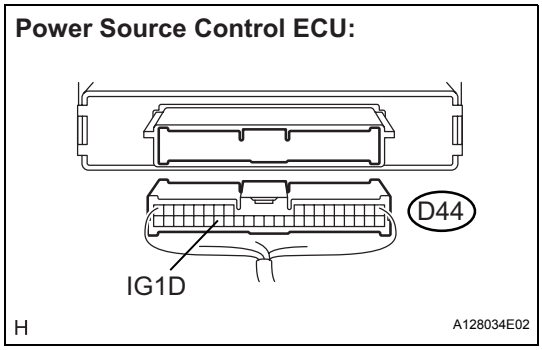

(b) Disconnect the D44 ECU connector.
(c) Measure the resistance according to the value(s) in the table below.

Resistance

Terminal No. (symbol)	Specified Condition
1I-9 - D44-34 (IG1D)	Below 1 Ω
D44-34 - Body ground	10 kΩ or higher

NG → **REPAIR OR REPLACE HARNESS OR CONNECTOR**

OK

ST

4	CHECK WIRE HARNESS (INSTRUMENT PANEL J/B - BATTERY AND BODY GROUND)

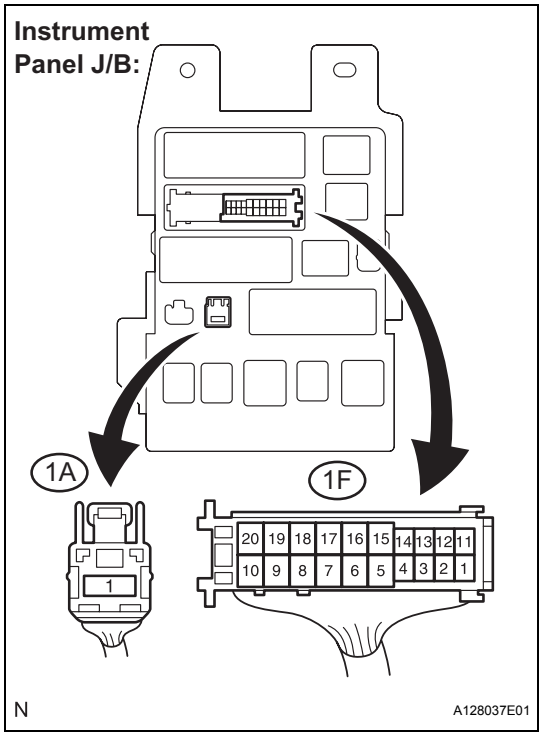

(a) Disconnect the 1F and 1A J/B connectors.
(b) Measure the resistance according to the value(s) in the table below.

Resistance

Terminal No.	Condition	Specified value
1F-10 - Body ground	Always	Below 1 Ω

(c) Measure the voltage according to the value(s) in the table below.

Voltage

Terminal No.	Condition	Specified value
1A-1 - Body ground	Always	10 to 14 V

NG → **REPAIR OR REPLACE HARNESS OR CONNECTOR**

OK

5	INSPECT INSTRUMENT PANEL J/B

(a) Measure the resistance according to the value(s) in the table below.

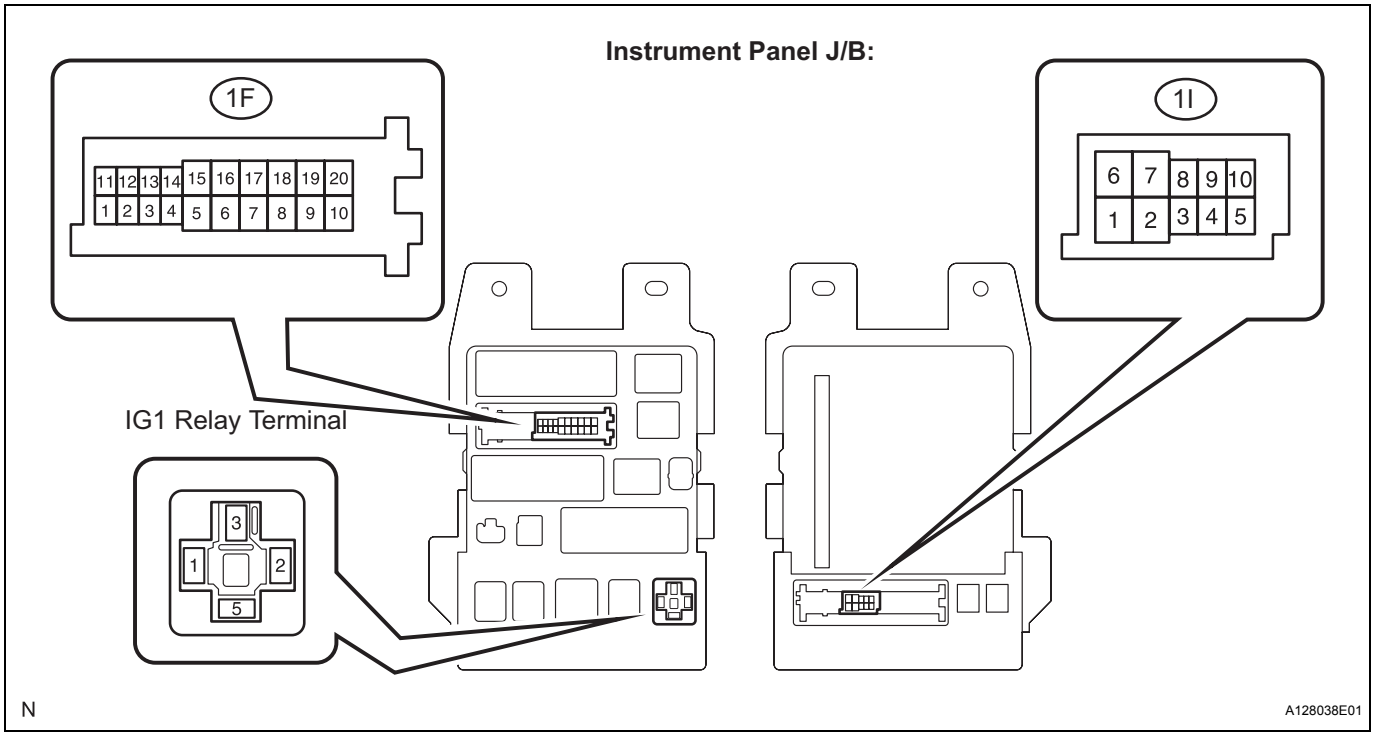

Resistance

Terminal No.	Condition	Specified value
1F-10 - IG1 relay terminal-1	Always	Below 1 Ω
1I-9 - IG1 relay terminal-2	Always	Below 1 Ω

NG → REPLACE INSTRUMENT PANEL J/B

OK

REPLACE POWER SOURCE CONTROL ECU

DTC	B2273	Ignition 2 Monitor Malfunction

DESCRIPTION

This DTC is output when the IG output circuit from the inside of the power source control ECU to the IG2 relay is malfunctioning.

DTC No.	DTC Detection Condition	Trouble Area
B2273	IG2 relay actuation circuit inside power source control ECU or other related circuits is malfunctioning	• Power source control ECU • IG2 relay • Wire harness

WIRING DIAGRAM

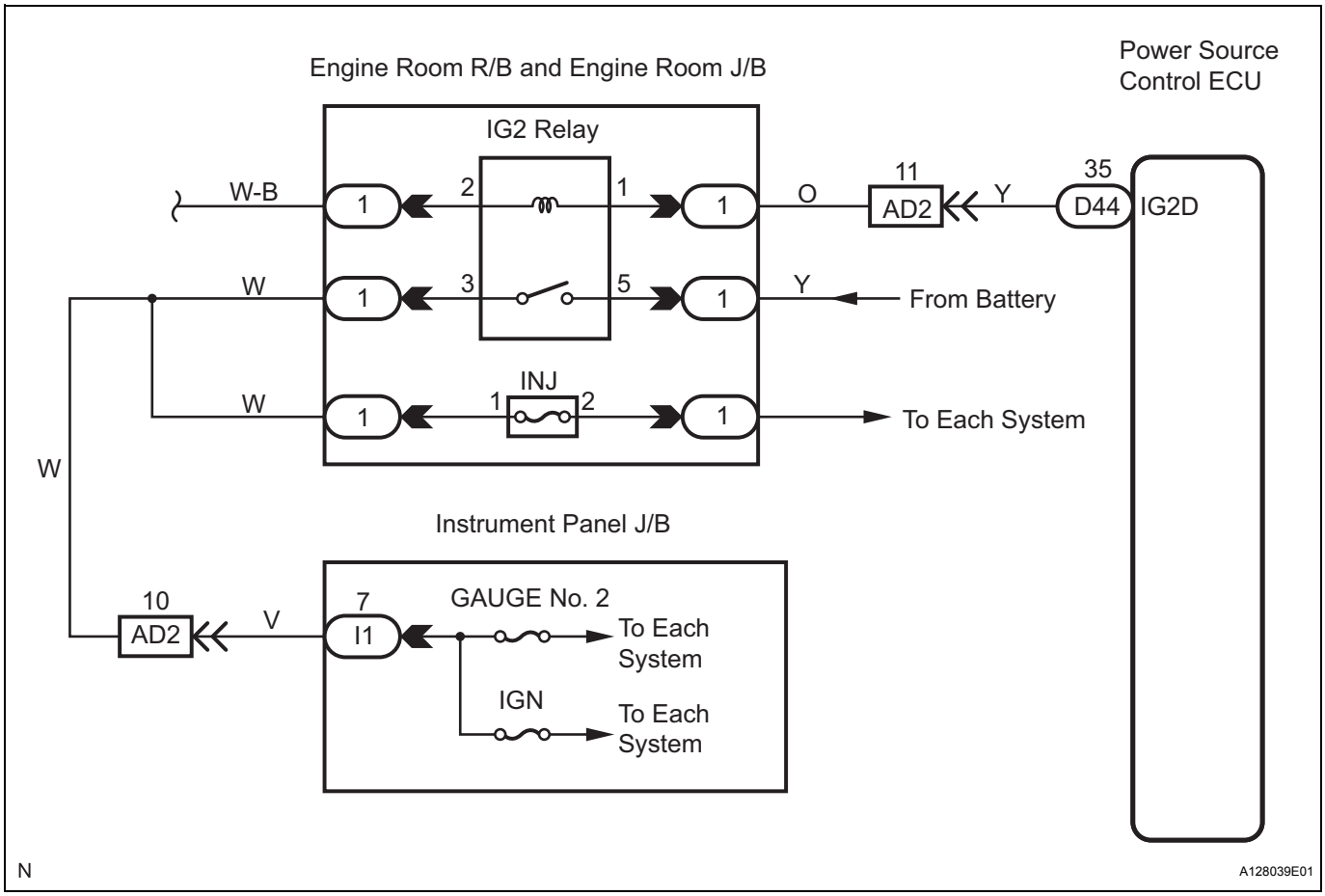

INSPECTION PROCEDURE

1	READ VALUE OF INTELLIGENT TESTER

(a) Connect the intelligent tester to the DLC3.
(b) Turn the engine switch on (IG) and press the intelligent tester main switch on.

ST

(c) Read the Data List according to the displays on the tester.

PWR SOURCE CTRL (Power source control ECU):

Item	Measurement Item / Display (Range)	Normal Condition	Diagnostic Note
IG2 RELAY MON1	Status of IG2 relay monitor (outer) / ON or OFF	ON: Engine switch ON (IG2 relay is ON) OFF: Engine switch OFF (IG2 relay is OFF)	-

OK:
"ON" (Engine switch on (IG)) appears on the screen.

Result

Condition	Proceed to
NG	C
OK (When troubleshooting according to the PROBLEM SYMPTOM TABLE)	B
OK (When troubleshooting according to the DTC chart)	A

B → **PROCEED TO NEXT CIRCUIT INSPECTION SHOWN IN PROBLEM SYMPTOMS TABLE**

C → **Go to step 2**

A

REPLACE POWER SOURCE CONTROL ECU

ST

2 **INSPECT RELAY (Marking: IG2)**

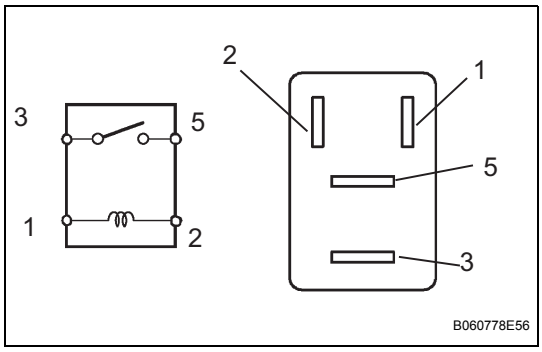

(a) Remove the IG2 relay from the engine room R/B.
(b) Measure the resistance according to the value(s) in the table below.

Resistance

Tester Connection	Specified Condition
3 - 5	10 kΩ or higher
3 - 5	Below 1 Ω (when battery voltage is applied to terminals 1 and 2)

NG → **REPLACE RELAY**

OK

3	CHECK WIRE HARNESS (ENGINE ROOM R/B - POWER SOURCE CONTROL ECU AND BODY GROUND)

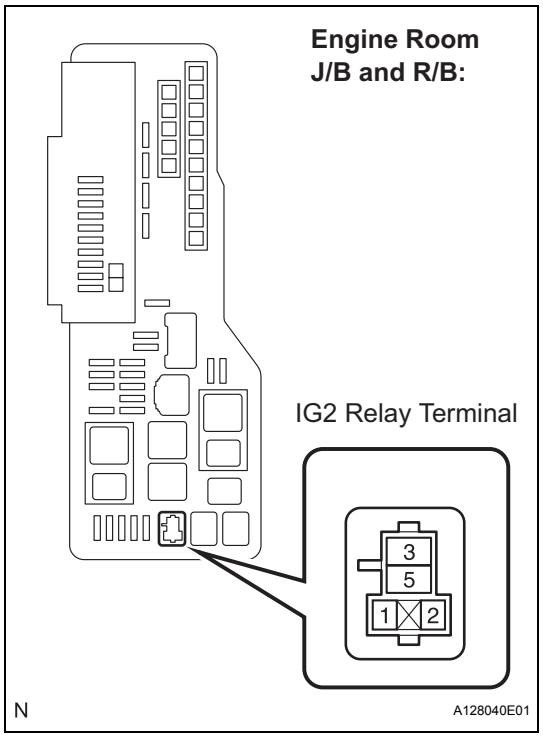

(a) Remove the IG2 relay from the engine room J/B and R/B.

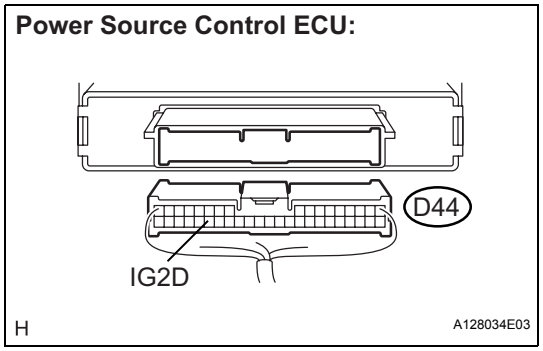

(b) Disconnect the D44 ECU connector.
(c) Measure the resistance according to the value(s) in the table below.

Resistance

Terminal No. (Symbol)	Specified Condition
Engine Room R/B IG2 relay terminal 1 - D44-35 (IG2D)	Below 1 Ω
Engine Room R/B IG2 relay terminal 2 - Body ground	Below 1 Ω
D44-35 (IG2D) - Body ground	10 kΩ or higher

ST

NG → REPAIR OR REPLACE HARNESS OR CONNECTOR

OK

REPLACE POWER SOURCE CONTROL ECU

DTC	B2274	ACC Monitor Malfunction

DESCRIPTION

This DTC is output when the ACC output circuit from the inside the power source control ECU to the ACC relay is malfunctioning.

DTC No.	DTC Detection Condition	Trouble Area
B2274	ACC relay actuation circuit inside power source control ECU or other related circuits is malfunctioning	• Power source control ECU • ACC relay • Wire harness

WIRING DIAGRAM

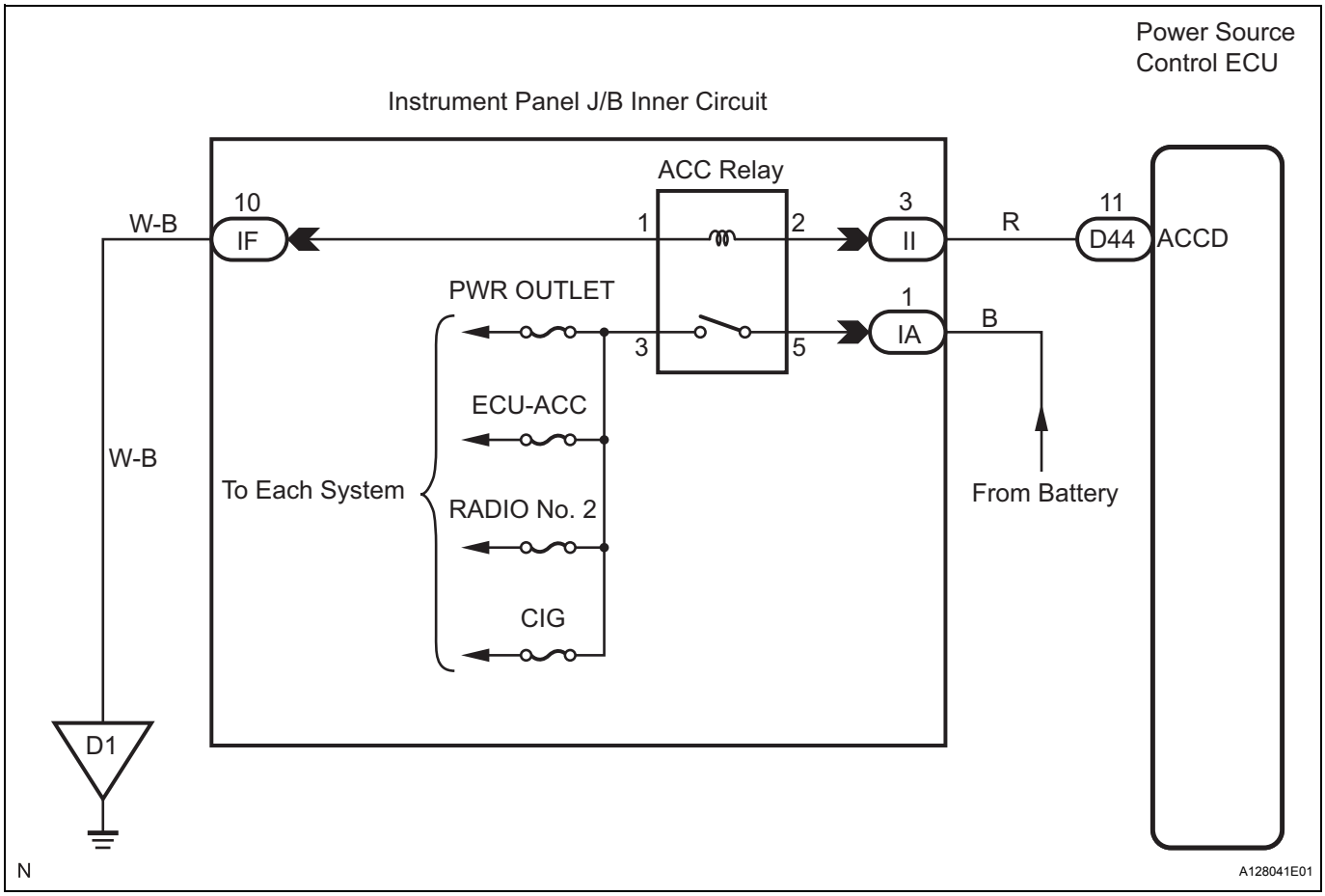

INSPECTION PROCEDURE

1	READ VALUE OF INTELLIGENT TESTER

(a) Connect the intelligent tester to the DLC3.
(b) Turn the engine switch on (IG) and press the intelligent tester main switch on.

(c) Read the Data List according to the displays on the tester.

PWR SOURCE CTRL (Power source control ECU):

Item	Measurement Item / Display (Range)	Normal Condition	Diagnostic Note
ACC RELAY MON	Status of ACC Relay Monitor / ON or OFF	ON: Engine switch ON (ACC) OFF: Engine switch OFF	-

OK:
"ON" (engine switch on (ACC)) appears on the screen.

Result

Condition	Proceed to
NG	C
OK (When troubleshooting according to the PROBLEM SYMPTOM TABLE)	B
OK (When troubleshooting according to the DTC chart)	A

B → **PROCEED TO NEXT CIRCUIT INSPECTION SHOWN IN PROBLEM SYMPTOMS TABLE**

C → **Go to step 2**

A

REPLACE POWER SOURCE CONTROL ECU

2 **INSPECT RELAY (Marking: ACC)**

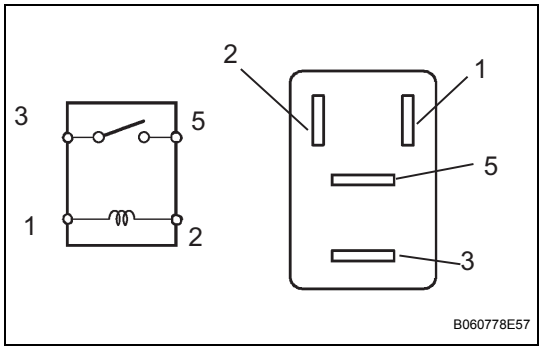

(a) Remove the ACC relay for the instrument panel J/B.
(b) Measure the resistance according to the value(s) in the table below.
Resistance

Tester Connection	Specified Condition
3 - 5	10 kΩ or higher
3 - 5	Below 1 Ω (when battery voltage is applied to terminals 1 and 2)

NG → **REPLACE RELAY**

OK

ST

3	CHECK WIRE HARNESS (ACC RELAY - POWER SOURCE CONTROL ECU AND BODY GROUND)

Power Source Control ECU:

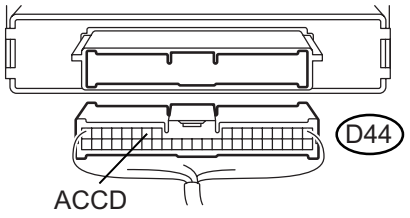

H A128034E04

(a) Disconnect the D44 ECU connector.

Instrument Panel J/B:

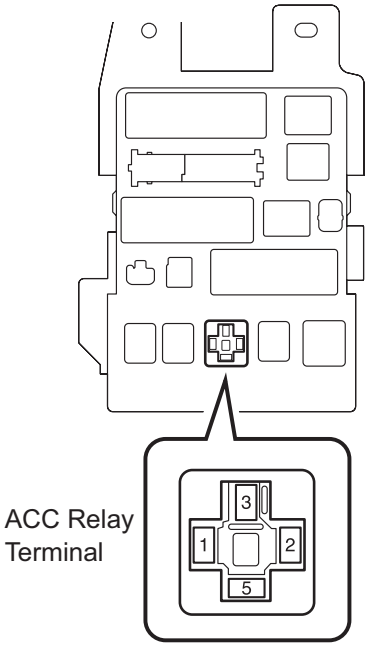

N A128042E01

(b) Measure the resistance according to the value(s) in the table below.

Resistance

Terminal No. (Symbol)	Specified Condition
R/B ACC relay terminal 2 - D44-11 (ACCD)	Below 1 Ω
R/B ACC relay terminal 2 - Body ground	10 kΩ or higher
R/B ACC relay terminal 1 - Body ground	Below 1 Ω

NG → REPAIR OR REPLACE HARNESS OR CONNECTOR

OK

REPLACE POWER SOURCE CONTROL ECU

ST

DTC	B2275	STSW Monitor Malfunction

DESCRIPTION

This DTC is output when the ST output circuits inside the power source control ECU is open or shorted.

DTC No.	DTC Detection Condition	Trouble Area
B2275	ST output circuit inside power source control ECU or other related circuit is malfunctioning	• Power source control ECU • ECM • Wire harness

WIRING DIAGRAM

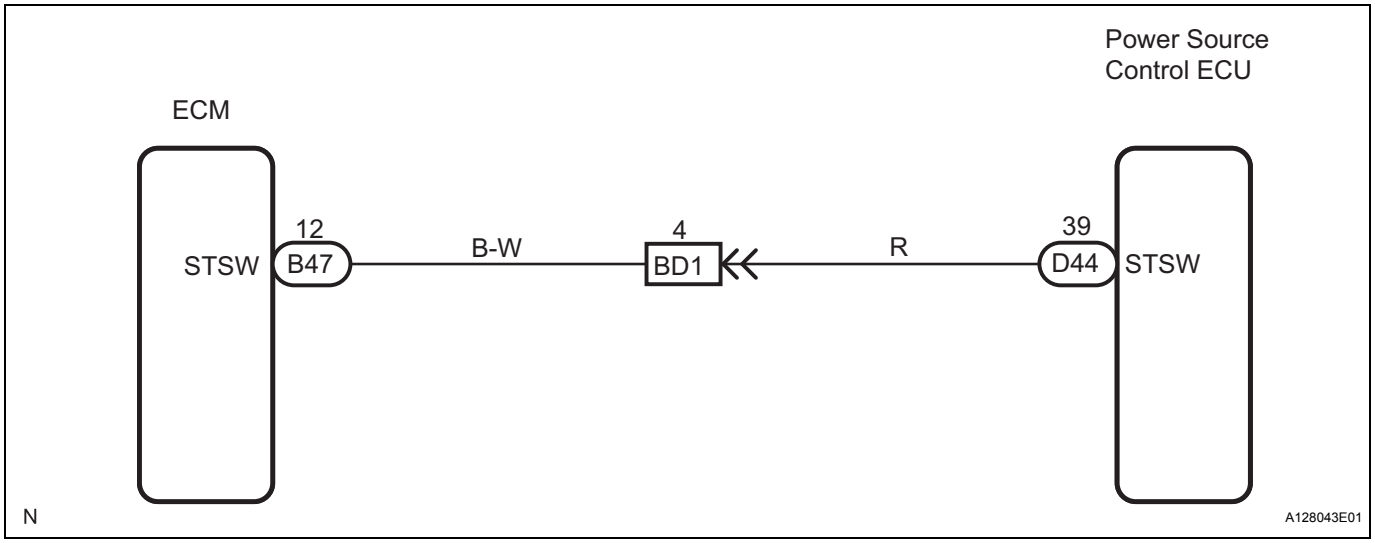

INSPECTION PROCEDURE

ST

1	CHECK DTC OUTPUT

(a) Delete the DTC (See page ST-22).
HINT:
After all DTCs are cleared, turn the engine switch on (IG) and depress the brake pedal. After 15 seconds have elapsed, check if the trouble occurs again.

(b) Check for DTCs again.
OK:
No DTC is output.

NG → **Go to step 2**

OK

END

2 INSPECT POWER SOURCE CONTROL ECU

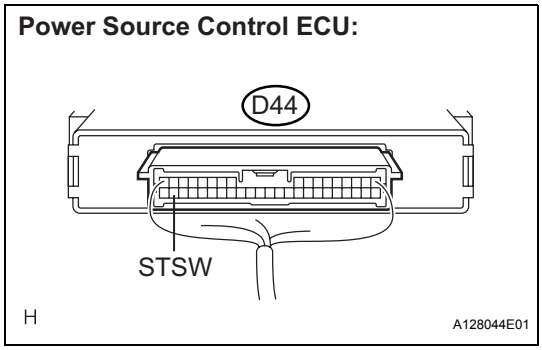

(a) Measure the voltage according to the value(s) in the table below.

Voltage

Terminal No. (Symbol)	Condition	Specified condition
D44-39 (STSW) - Body ground	Brake pedal depressed, Engine switch START	10 to 14 V

HINT:
Voltage is output for 0.3 seconds after engine start.

NG → **REPLACE POWER SOURCE CONTROL ECU**

OK

3 CHECK WIRE HARNESS (POWER SOURCE CONTROL ECU - ECM)

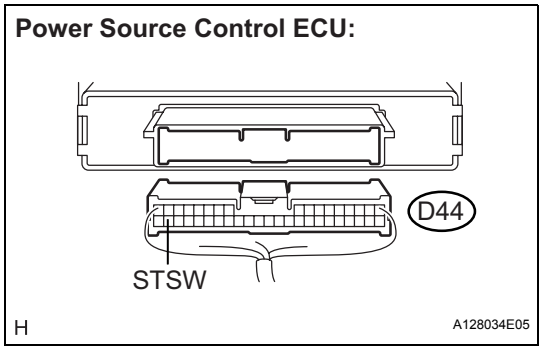

(a) Disconnect the D44 ECU connector.

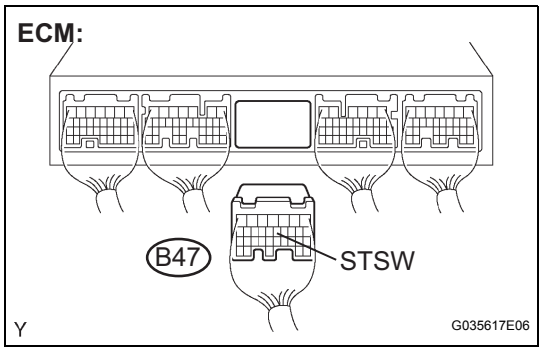

(b) Disconnect the B47 ECM connector.
(c) Measure the resistance according to the value(s) in the table below.

Resistance

Terminal No. (Symbol)	Specified Condition
D44-39 (STSW) - B47-12 (STSW)	Below 1 Ω
D44-39 (STSW) - Body ground	10 kΩ or higher

NG → **REPAIR OR REPLACE HARNESS OR CONNECTOR**

OK

4 CHECK POWER SOURCE CONTROL ECU OPERATION

(a) After replacing the power source control ECU with a normally functioning ECU, check that the engine can start.

OK:

Engine can start normally.

NG → **GO TO SFI SYSTEM**

ST

OK

END (POWER SOURCE CONTROL ECU DEFECTIVE)

DTC	B2276	ACCR Signal Circuit Malfunction

DESCRIPTION

The power source control ECU and the ECM are connected by the cable and BEAN.
If the cable information and BEAN information are inconsistent, this DTC will be output.

DTC No.	DTC Detection Condition	Trouble Area
B2276	Cable and BEAN informations between power source control ECU and ECM are inconsistent	• Power source control ECU • ECM • Wire harness

WIRING DIAGRAM

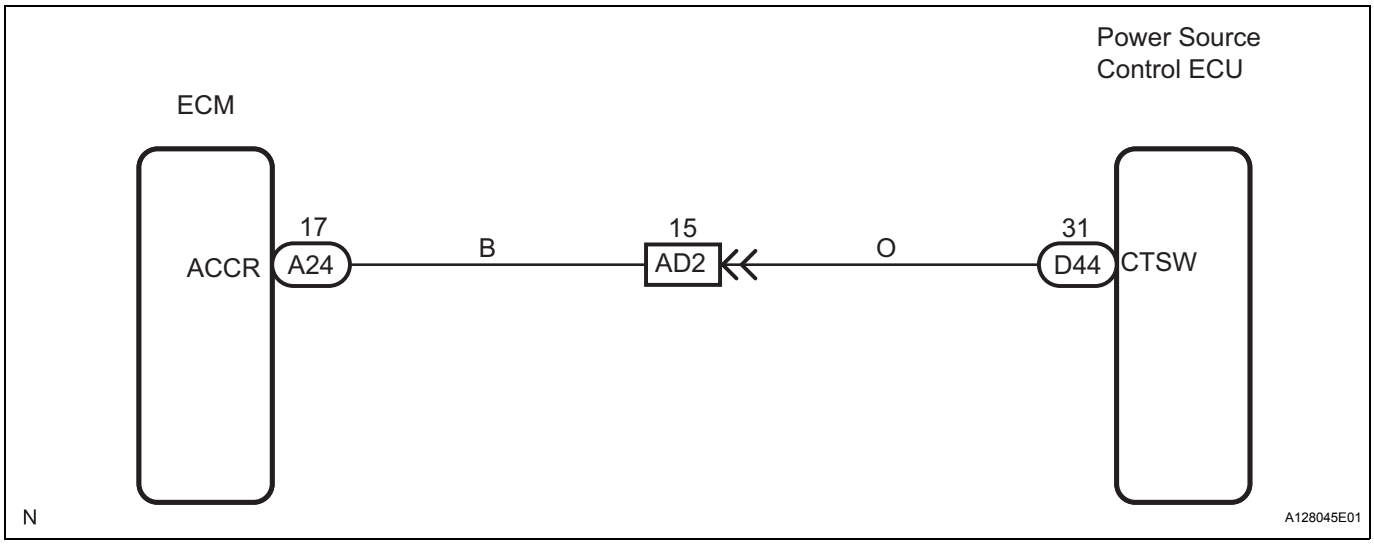

ST

INSPECTION PROCEDURE

1	CHECK DTC OUTPUT

(a) Delete the DTC (See page ST-22).
HINT:
After all DTCs are cleared, check if the trouble occurs again 50 seconds after the engine switch is turned on (IG).

(b) Check for DTCs again.
OK:
No DTC is output.

NG → **Go to step 2**

OK

END

2 INSPECT POWER SOURCE CONTROL ECU

Power Source Control ECU:

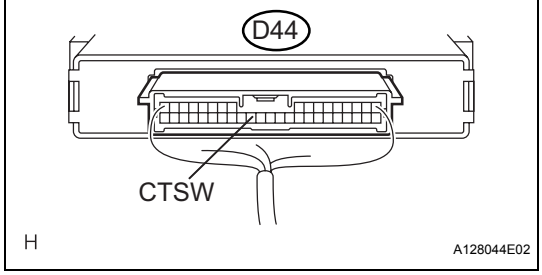

(a) Measure the voltage according to the value(s) in the table below.
Voltage

Terminal No. (Symbol)	Condition	Specified condition
D44-31 (CTSW) - Body ground	Brake pedal depressed, Ignition switch START	Below 1 V

HINT:
Voltage is output only when the engine is cranking.

NG → **Go to step 4**

OK

3 CHECK WIRE HARNESS (POWER SOURCE CONTROL ECU - ECM)

Power Source Control ECU:

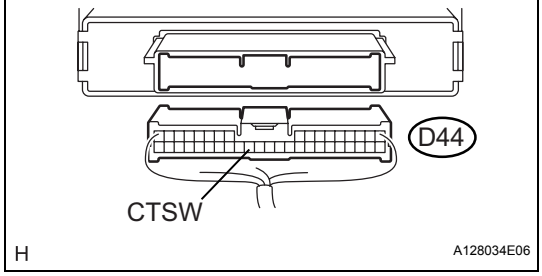

(a) Disconnect the D44 ECU connector.

ECM:

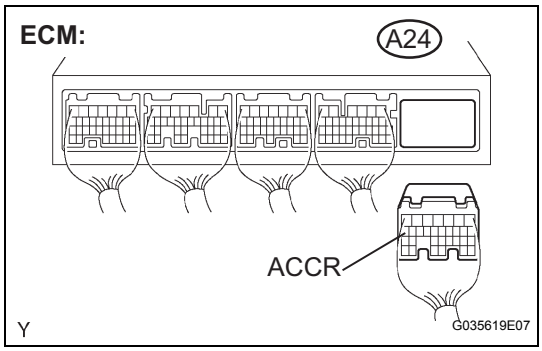

(b) Disconnect the A24 ECM connector.
(c) Measure the resistance according to the value(s) in the table below.
Resistance

Terminal No. (Symbol)	Specified condition
D44-31 (CTSW) - A24-17 (ACCR)	Below 1 Ω
D44-31 (CTSW) - Body ground	10 kΩ or higher

NG → **REPAIR OR REPLACE HARNESS OR CONNECTOR**

OK

4 CHECK POWER SOURCE CONTROL ECU OPERATION

(a) After replacing the power source control ECU with a normally functioning ECU, check that the engine starts.
OK:
Engine can start normally.

NG → **GO TO SFI SYSTEM**

ST

OK

END (POWER SOURCE CONTROL ECU DEFECTIVE)

DTC	B2277	Detecting Vehicle Submersion

DESCRIPTION

This DTC is output when the submersion circuit monitor inside the power source control ECU detects that the vehicle is submerged in water.

DTC No.	DTC Detection Condition	Trouble Area
B2277	Submersion circuit monitor inside power source control ECU detects that vehicle is submerged in water	Power source control ECU

INSPECTION PROCEDURE

1	CHECK DTC OUTPUT

(a) Delete the DTC (See page ST-22).
HINT:
After all DTCs are cleared, check if the trouble occurs again 30 seconds after the engine switch is turned on (IG).

(b) Check for DTCs again.
OK:
No DTC is output.

NG → **REPLACE POWER SOURCE CONTROL ECU**

OK

END

DTC	B2278	Engine Switch Circuit Malfunction

DESCRIPTION

This DTC is output when: 1) a malfunction is detected between the power source control ECU and the engine switch; or 2) either of the switches inside the engine switch is malfunctioning.

DTC No.	DTC Detection Condition	Trouble Area
B2278	Communication is abnormal between power source control ECU and engine switch, or engine switch is defective	• Power source control ECU • Engine switch • Wire harness

WIRING DIAGRAM

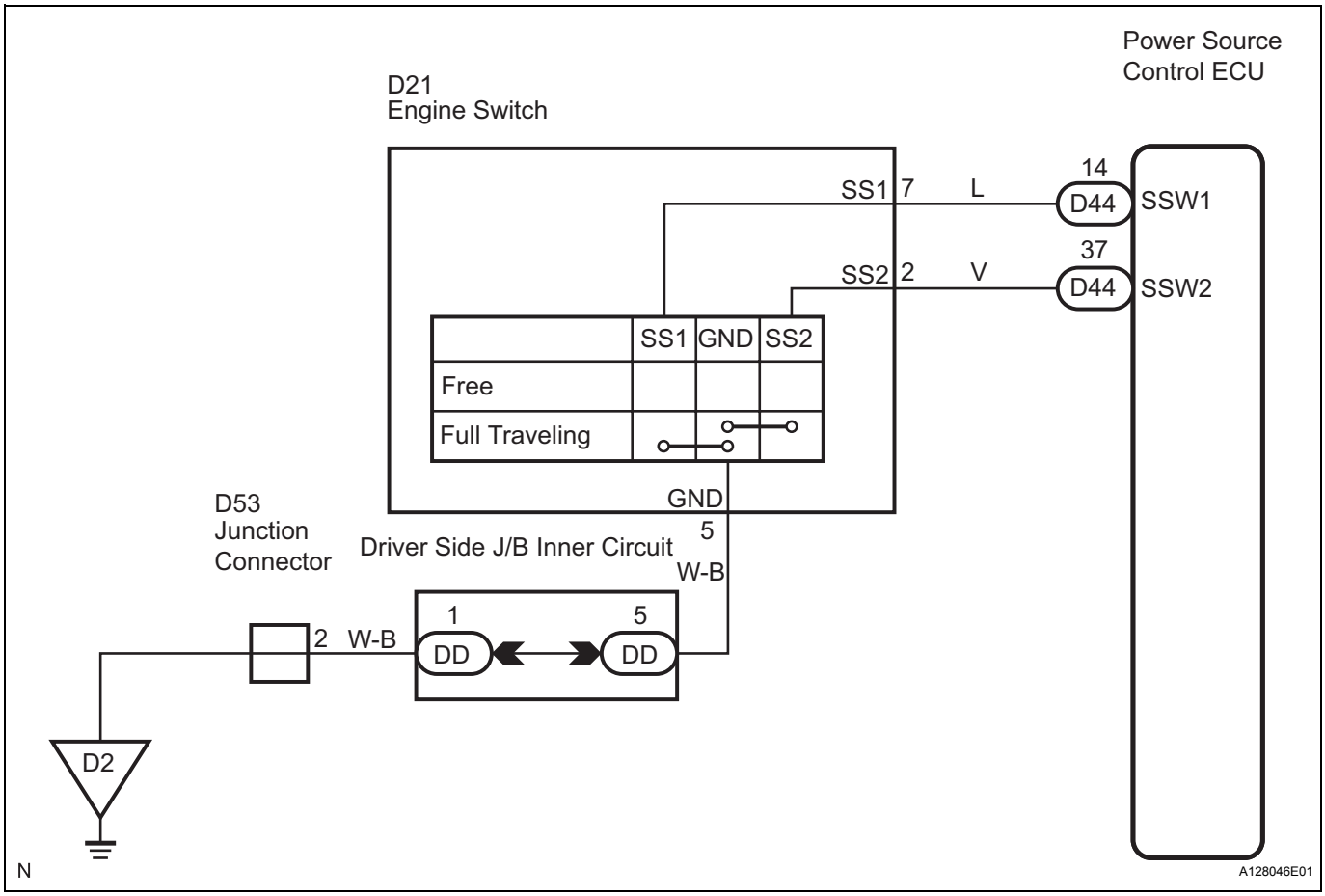

INSPECTION PROCEDURE

1	READ VALUE OF INTELLIGENT TESTER

(a) Connect the intelligent tester to the DLC3.
(b) Turn the engine switch on (IG) and press the intelligent tester main switch on.

(c) Read the Data List according to the displays on the tester.

PWR SOURCE CTRL (Power source control ECU):

Item	Measurement Item / Display (Range)	Normal Condition	Diagnostic Note
START SW1	Status of start switch 1 / ON or OFF	ON: Engine switch ON (IG) OFF: Engine switch OFF (IG)	-
START SW2	Status of start switch 2/ ON or OFF	ON: Engine switch ON (IG) OFF: Engine switch OFF (IG)	-

OK:
"ON" (engine switch on (IG)) appears on the screen

Result

Condition	Proceed to
NG	C
OK (When troubleshooting according to the PROBLEM SYMPTOM TABLE)	B
OK (When troubleshooting according to the DTC chart)	A

B → **PROCEED TO NEXT CIRCUIT INSPECTION SHOWN IN PROBLEM SYMPTOMS TABLE**

C → **Go to step 2**

A

REPLACE POWER SOURCE CONTROL ECU

2 INSPECT ENGINE SWITCH

Engine Switch Connector Front View:

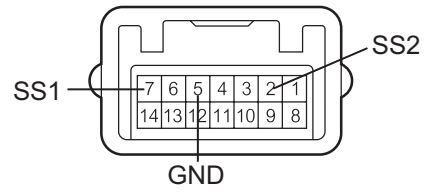

(a) Disconnect the D21 switch connector.
(b) Measure the resistance according to the value(s) in the table below.

Resistance

Terminal No. (Symbol)	Switch Condition	Specified value
D21-2 (SS2) - D21-5 (GND)	Free	10 kΩ or higher
	Pushed (Hold)	Below 1 Ω
D21-7 (SS1) - D21-5 (GND)	Free	10 kΩ or higher
	Pushed (Hold)	Below 1 Ω

NG → **REPLACE ENGINE SWITCH**

OK

3	CHECK WIRE HARNESS (ENGINE SWITCH - POWER SOURCE CONTROL ECU AND BODY GROUND)

Power Source Control ECU:

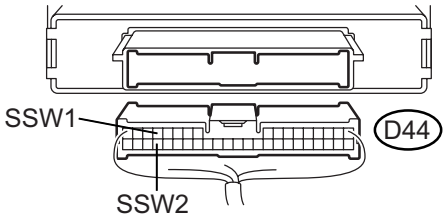

H A128034E07

(a) Disconnect the D21 switch connector.

Engine Switch Wire Harness Side:

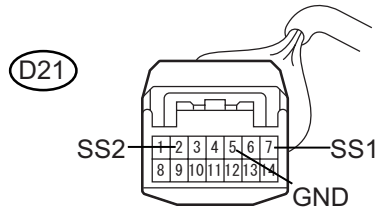

H A128048E01

(b) Disconnect the D44 ECU connector.
(c) Measure the resistance of the wire harness side connectors.

Resistance

Terminal No. (Symbol)	Specified Condition
D21-7 (SS1) - D44-14 (SSW1)	Below 1 Ω
D21-2 (SS2) - D44-37 (SSW2)	Below 1 Ω
D21-5 (GND) - Body ground	Below 1 Ω
D21-7 (SS1) or D44-14 (SSW1) - Body ground	10 kΩ or higher
D21-2 (SS2) or D44-37 (SSW2) - Body ground	10 kΩ or higher

ST

NG → REPAIR OR REPLACE HARNESS OR CONNECTOR

OK

REPLACE ENGINE SWITCH

DTC	B2281	"P" Signal Malfunction

DESCRIPTION

The power source control ECU and the shift lock control ECU are connected by a cable and the BEAN. If the cable information and BEAN information are inconsistent, this DTC will be output.

DTC No.	DTC Detection Condition	Trouble Area
B2281	Cable and BEAN between power source control ECU and shift lock control ECU are inconsistent	• Power source control ECU • Shift lock control ECU • Wire harness

WIRING DIAGRAM

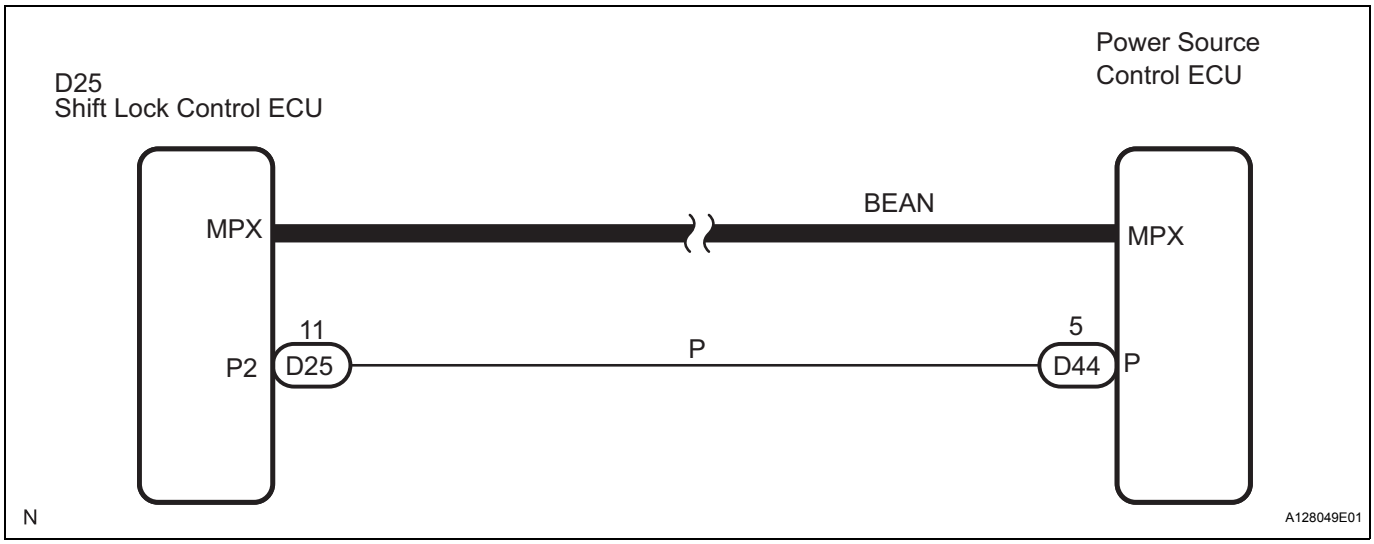

ST

INSPECTION PROCEDURE

1	READ VALUE OF INTELLIGENT TESTER

(a) Connect the intelligent tester to the DLC3.
(b) Turn the engine switch on (IG) and press the intelligent tester main switch on.
(c) Read the DATA LIST according to the displays on the tester.

PWR SOURCE CTRL (Power source control ECU):

Item	Measurement Item / Range (Display)	Normal Condition	Diagnostic Note
SHIFT P SIG	Shift P Signal / ON or OFF	ON: Shift P signal ON (Shift position is P) OFF: Shift P signal OFF (Shift position is not P)	-

OK:
"ON" (P signal is ON) appears on the screen.

Result

Condition	Proceed to
NG	C
OK (When troubleshooting according to the PROBLEM SYMPTOM TABLE)	B
OK (When troubleshooting according to the DTC chart)	A

B → PROCEED TO NEXT CIRCUIT INSPECTION SHOWN IN PROBLEM SYMPTOMS TABLE

C → Go to step 2

A

REPLACE POWER SOURCE CONTROL ECU

2 CHECK WIRE HARNESS (POWER SOURCE CONTROL ECU - SHIFT LOCK CONTROL ECU)

Power Source Control ECU:

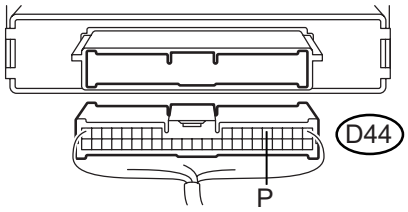

H A128034E08

(a) Disconnect the D44 ECU connector.

Shift Lock Control ECU Wire Harness Side:

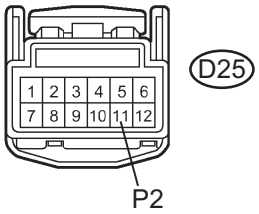

H I36955 I038235E02

(b) Disconnect the D25 ECU connector.
(c) Measure the resistance according to the value(s) in the table below.

Resistance

Terminal No. (Symbol)	Specified Condition
D44-5 (P) - D25-11 (P2)	Below 1 Ω
D44-5 (P) - Body ground	10 kΩ or higher

NG → REPAIR OR REPLACE HARNESS OR CONNECTOR

OK

3 CHECK POWER SOURCE CONTROL ECU OPERATION

(a) After replacing the power source control ECU with a normally functioning ECU, check that the push button start function can start normally.

OK:

Push button start function can start normally.

NG → GO TO SHIFT CONTROL SYSTEM

OK

END (POWER SOURCE CONTROL ECU DEFECTIVE)

DTC	B2282	Vehicle Speed Signal Malfunction

DTC	B2283	Vehicle Speed Sensor Malfunction

DESCRIPTION

The skid control ECU converts these signals into 4-pulse signals and sends them to the combination meter. After this signal is converted into a more precise rectangular waveform by the waveform shaping circuit inside the combination meter, it is then transmitted to the power source control ECU. The power source control ECU determines vehicle speed based on the frequency of these pulse signals.

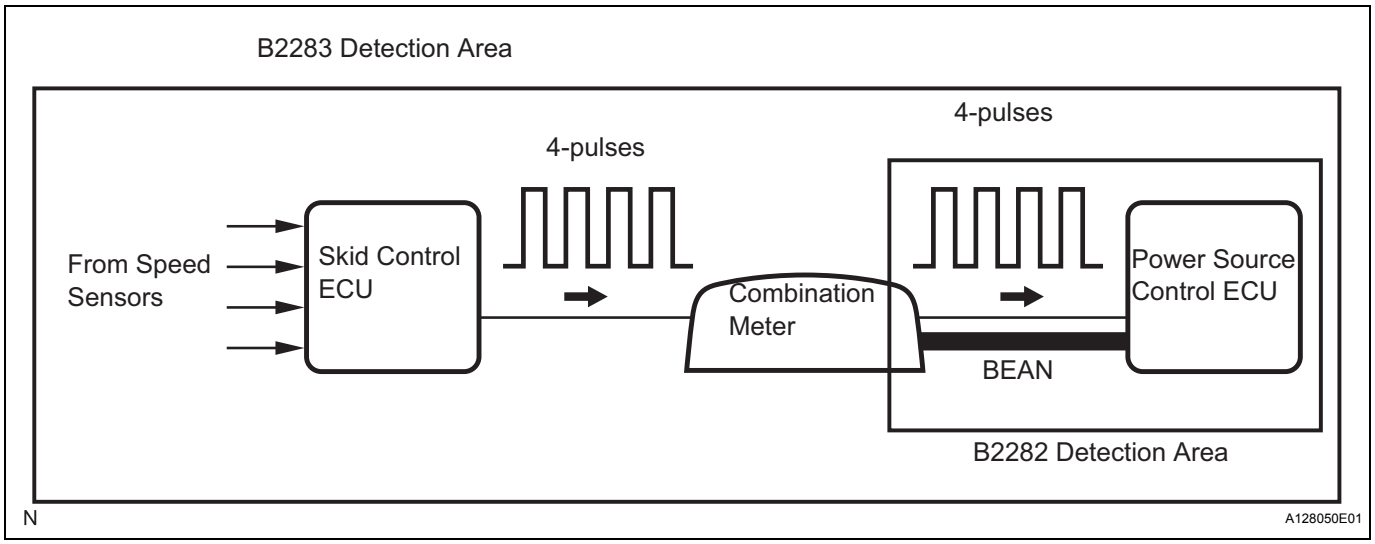

The power source control ECU and the combination meter are connected by a cable and BEAN. This DTC is output when: 1) the cable information and BEAN information are inconsistent; and 2) a malfunction is detected between the vehicle speed sensor and the combination meter.

ST

DTC No.	DTC Detection Condition	Trouble Area
B2282	Cable and BEAN information between power source control ECU and combination meter are inconsistent	• Power source control ECU • Combination meter assembly • Wire harness
B2283	The ECU detects either of the following: – Over deceleration in vehicle speed – The vehicle speed and the engine speed do not match	• Speed sensor • Power source control ECU • Combination meter assembly • Skid control ECU • Each ECU • Wire harness

WIRING DIAGRAM

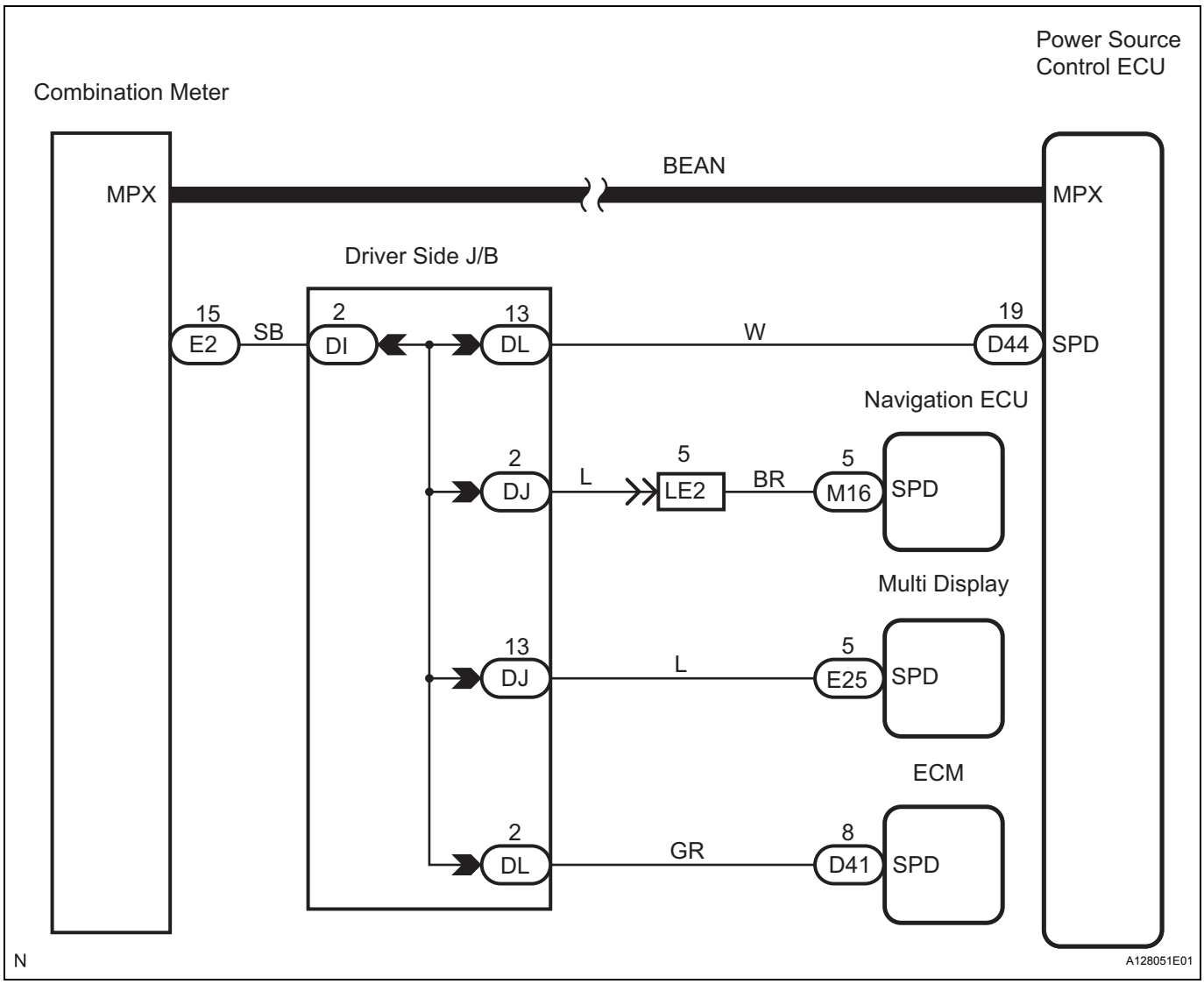

HINT:

- A voltage of 12 V or 5 V is output from each ECU and then input to the combination meter. The signal is changed to a pulse signal at the transistor in the combination meter. Each ECU controls the respective system based on the pulse signal.
- If a short occurs in an ECU, all systems in the diagram below will not operate normally.

INSPECTION PROCEDURE

1	CHECK SPEEDOMETER OPERATION

(a) Drive the vehicle and check if the function of the speedometer in the combination meter is normal.

OK:

Actual vehicle speed and the speed indicated on the speedometer are the same.

HINT:

The vehicle speed sensor is functioning normally when the indication on the speedometer is normal.

ST

NG → CHECK COMBINATION METER ASSEMBLY

OK

2 CHECK DTC OUTPUT (PUSH BUTTON START)

(a) Delete the DTC (See page ST-22).
HINT:
After all DTCs are cleared, check if the trouble occurs again 320 seconds after the engine switch is turned on (IG).
(b) Check for DTCs again.
OK:
No DTC is output

OK → END

NG

3 CHECK DTC OUTPUT (ABS SYSTEM)

(a) Delete the DTC (w/o VSC: See page BC-19, w/ VSC: See page BC-121).
HINT:
If the DTCs for the ABS system or the vehicle speed sensor malfunction are output, inspect those DTCs first (w/o VSC: See page BC-23, w/ VSC: See page BC-128).
(b) Check for DTCs again.
OK:
No DTC is output

NG → GO TO ABS SYSTEM

OK

4 READ VALUE OF INTELLIGENT TESTER

(a) Connect the intelligent tester to the DLC3.
(b) Turn the engine switch on (IG) and press the intelligent tester main switch on.
(c) Read the Data List according to the displays on the tester.

Item	Measurement Item / Display (Range)	Normal Condition	Diagnostic Note
VEHICLE SPD SIG	Status of vehicle speed signal / STOP or RUN	STOP: Vehicle is stopped RUN: Vehicle is running	-

OK:
"STOP" (vehicle is stopped) appears on the screen.

NG → Go to step 5

ST

OK

REPLACE POWER SOURCE CONTROL ECU

5	CHECK WIRE HARNESS (POWER SOURCE CONTROL ECU - COMBINATION METER ASSEMBLY)

Power Source Control ECU:

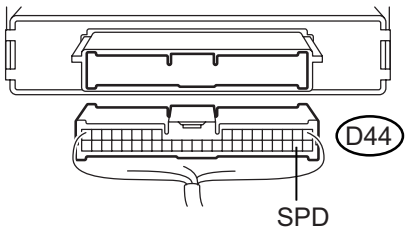

(a) Disconnect the D44 ECU connector.

Combination Meter:

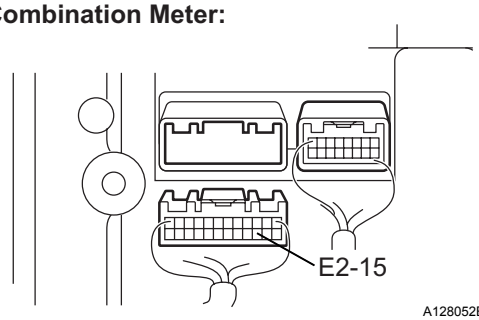

(b) Disconnect the E2 meter connector.
(c) Measure the resistance according to the value(s) in the table below.

Resistance

Terminal No. (Symbol)	Specified Condition
D44-19 (SPD) - E2-15	Below 1 Ω
D44-19 (SPD) - Body ground	10 kΩ or higher

HINT:
If the resistance between terminal SPD and body ground is less than 10 kΩ, there may be a short in a wire harness, connector, or ECU.

NG → **REPAIR OR REPLACE HARNESS OR CONNECTOR AND EACH ECU**

OK

6	CHECK DTC OUTPUT (POWER SOURCE CONTROL ECU ASSEMBLY)

(a) After replacing the power source control ECU with a normally functioning ECU, check for power source control ECU DTCs.

OK:

Power source control ECU DTCs are not output.

NG → **GO TO COMBINATION METER SYSTEM**

OK

END (POWER SOURCE CONTROL ECU DEFECTIVE)

ST

DTC	B2284	Brake Signal Malfunction

DESCRIPTION

This DTC is output when :1) the brake signal circuit between the power source control ECU and the stop light switch is malfunctioning; and 2) the cable and BEAN information are inconsistent.

DTC No.	DTC Detection Condition	Trouble Area
B2284	Cable and BEAN information between power source control ECU and stop light switch are inconsistent	• Power source control ECU • Stop light switch • Wire harness

WIRING DIAGRAM

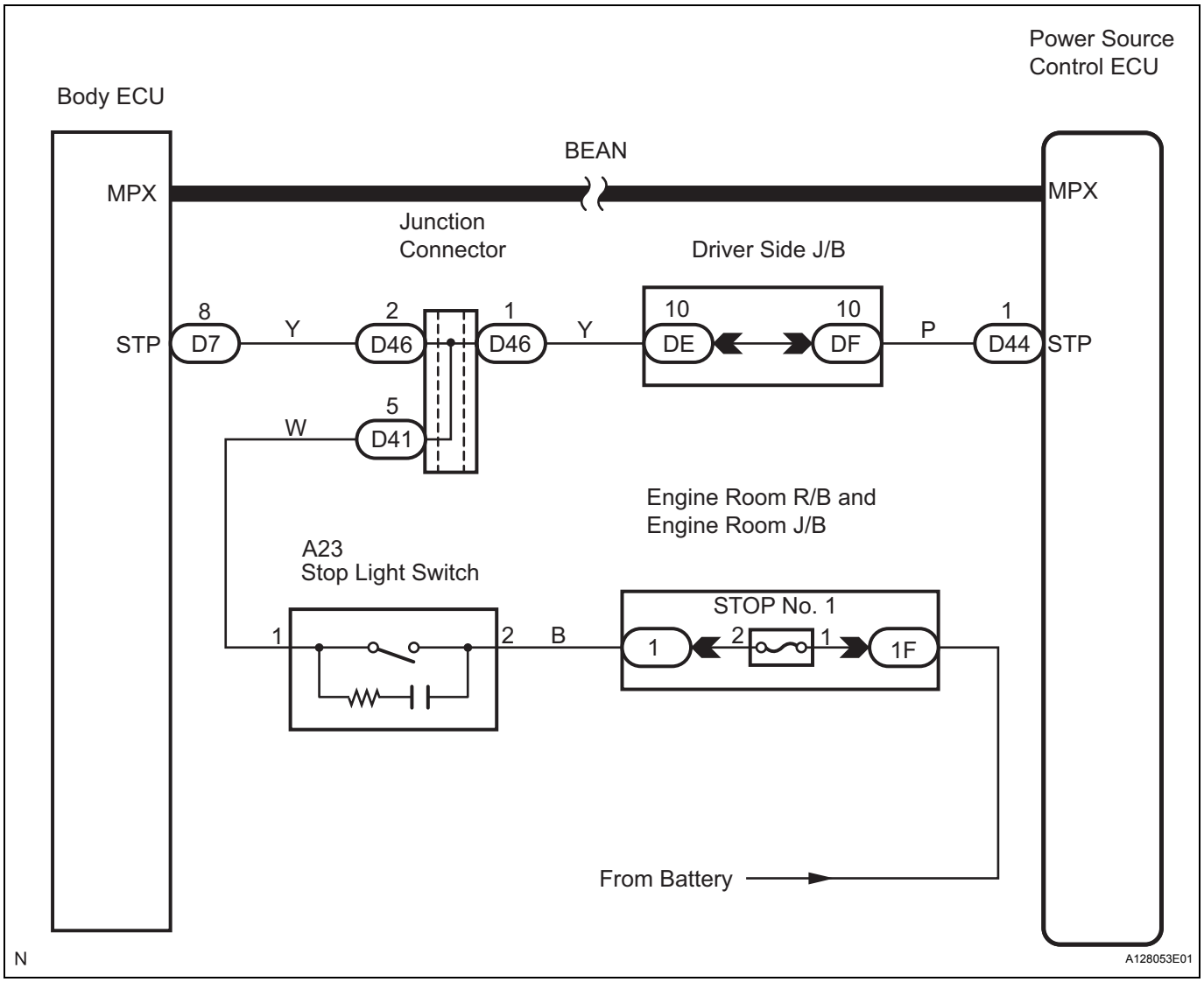

INSPECTION PROCEDURE

HINT:

Before performing the inspection procedure, depress the brake pedal and check that the stop lights come on. If the stop lights do not come on, See page LI-18.

1	READ VALUE OF INTELLIGENT TESTER

(a) Connect the intelligent tester to the DLC3.
(b) Turn the engine switch on (IG) and press the intelligent tester main switch on.
(c) Read the Data List according to the displays on the tester.

PWR SOURCE CTRL (Power source control ECU):

Item	Measurement Item / Display (Range)	Normal Condition	Diagnostic Note
STOP LIGHT SW1	Stop light switch signal / ON or OFF	ON: Brake pedal depressed OFF: Brake pedal released	-

OK:
"ON" (brake pedal depressed) appears on the screen.

Result

Condition	Proceed to
NG	C
OK (When troubleshooting according to the PROBLEM SYMPTOM TABLE)	B
OK (When troubleshooting according to the DTC chart)	A

B → **PROCEED TO NEXT CIRCUIT INSPECTION SHOWN IN PROBLEM SYMPTOMS TABLE**

C → **Go to step 2**

ST

A →

REPLACE POWER SOURCE CONTROL ECU

2	INSPECT STOP LIGHT SWITCH ASSEMBLY

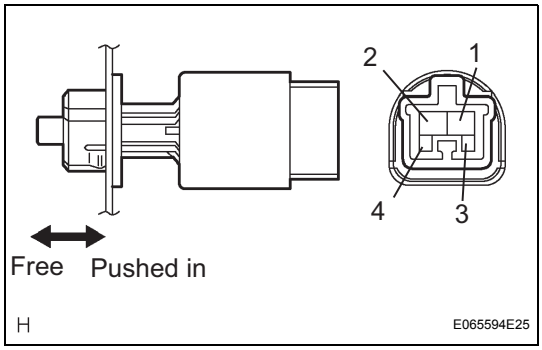

(a) Disconnect the stop light switch assembly connector.
(b) Measure the resistance according to the value(s) in the table below.

Resistance

Switch condition	Tester connection	Specified value
Switch pin free	1 - 2	Below 1 Ω
Switch pin free	3 - 4	10 kΩ or higher
Switch pin pushed in	1 - 2	10 kΩ or higher
Switch pin pushed in	3 - 4	Below 1 Ω

NG → **REPLACE STOP LIGHT SWITCH ASSEMBLY**

OK →

3	CHECK WIRE HARNESS (STOP LIGHT SWITCH - POWER SOURCE CONTROL ECU AND BATTERY)

Stop Light Switch Wire Harness

Connector Front View:

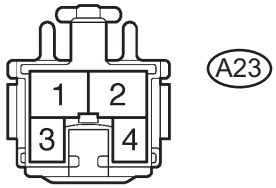

N I039310E04

(a) Disconnect the A23 switch connector.

Power Source Control ECU:

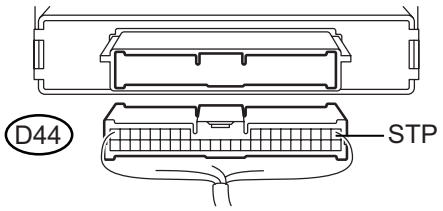

H A128034E10

(b) Disconnect the D44 ECU connector.
(c) Measure the resistance according to the value(s) in the table below.

Resistance

Terminal No. (Symbol)	Specified Condition
A23-1 - D44-1 (STP)	Below 1 Ω
A23-1 - Body ground	10 kΩ or higher

NG → **REPAIR OR REPLACE HARNESS OR CONNECTOR**

OK

REPLACE POWER SOURCE CONTROL ECU

ST

DTC	B2285	Steering Lock Position Signal Circuit Malfunction

DTC	B2288	Steering Lock Signal Circuit Malfunction

DESCRIPTION

The power source control ECU and the steering lock ECU are connected by a cable and LIN. These DTCs are output when: 1) the cable information and LIN information are inconsistent; and 2) a malfunction is detected between the power source control ECU and the steering lock ECU.

DTC No.	DTC Detection Condition	Trouble Area
B2285	Cable and LIN information between power source control ECU and steering lock actuator assembly are inconsistent	• Power source control ECU • Steering lock actuator (steering lock ECU) • Wire harness
B2288	Cable and LIN are abnormal between power source control ECU and steering lock actuator, or steering lock system is malfunctioning	• Power source control ECU • Steering lock actuator (steering lock ECU) • Wire harness

WIRING DIAGRAM

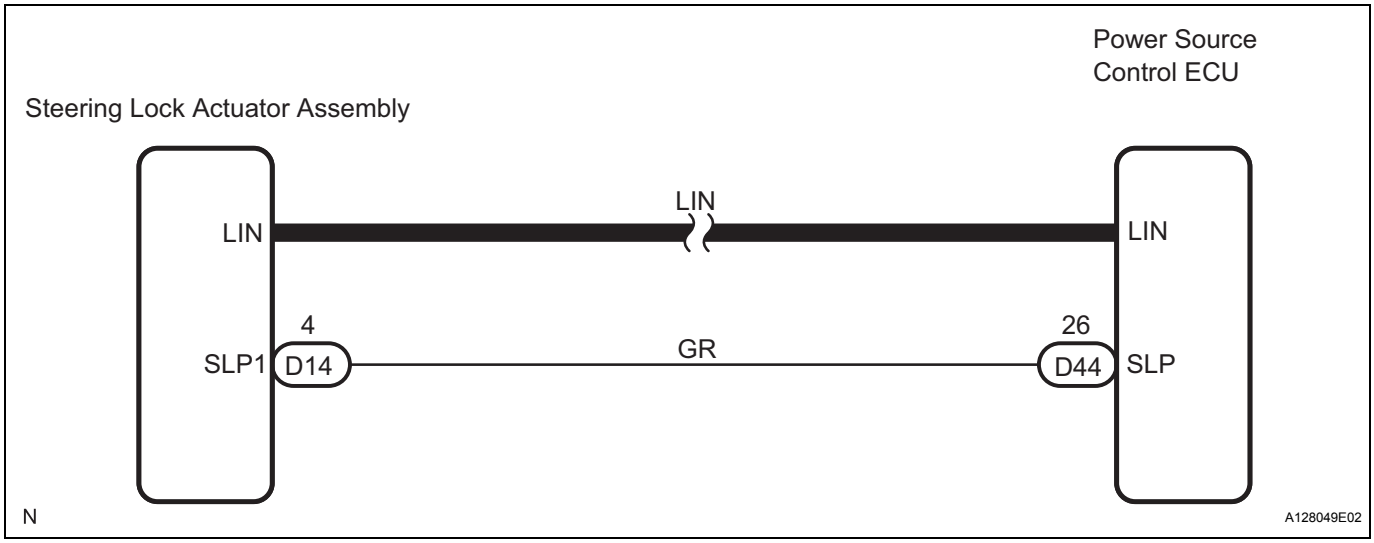

INSPECTION PROCEDURE

1	PERFORM ACTIVE TEST BY INTELLIGENT TESTER

(a) Connect the intelligent tester to the DLC3.
(b) Turn the power switch on (IG) and press the intelligent tester main switch on.
(c) Preform the Active Test according to the displays on the tester.

PWR SOURCE CTRL (Power source control ECU):

Item	Test Detail	Diagnostic Note
STR LOCK PWR	Power supply for steering lock ON / OFF	-

OK:

When ON is selected, power is supplied to the steering lock ECU.

NG → Go to step 2

OK

GO TO STEERING LOCK FUNCTION

2 CHECK DTC OUTPUT

(a) Delete the DTC (See page ST-22).
HINT:
After all DTCs are cleared, check if the trouble occurs again 5 seconds after the engine switch is turned on (IG).
(b) Check for DTCs again.
OK:
No DTC is output.

OK → END

NG

3 CHECK WIRE HARNESS (POWER SOURCE CONTROL ECU - STEERING LOCK ACTUATOR ASSEMBLY)

Power Source Control ECU:

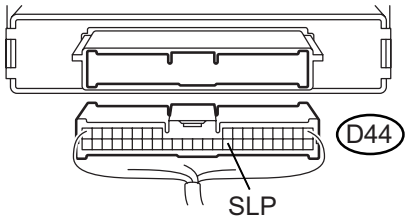

(a) Disconnect the D44 ECU connector.

Steering Lock ECU:

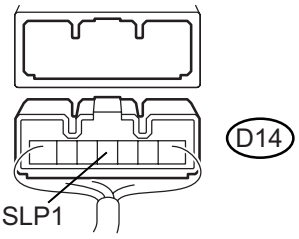

(b) Disconnect the D14 ECU connector.
(c) Measure the resistance according to the value(s) in the table below.
Resistance

Terminal No. (Symbol)	Specified Condition
D44-26 (SLP) - D14-4 (SLP1)	Below 1 Ω
D44-26 (SLP) - Body ground	10 kΩ or higher

NG → REPAIR OR REPLACE HARNESS OR CONNECTOR

OK

4	CHECK POWER SOURCE CONTROL ECU

(a) After replacing the power source control ECU with a normally functioning ECU, check that the steering lock unlocks.
OK:
Steering lock unlocks.

NG → **GO TO STEERING LOCK FUNCTION**

OK

END (POWER SOURCE CONTROL ECU DEFECTIVE)

DTC	B2286	Runnable Signal Malfunction

DESCRIPTION

The power source control ECU and the ECM are connected by the cable and BEAN. If the cable information and BEAN information are inconsistent, this DTC will be output.

DTC No.	DTC Detection Condition	Trouble Area
B2286	Cable and BEAN information between power source control ECU and ECM are inconsistent	• Power source control ECU • ECM • Wire harness

WIRING DIAGRAM

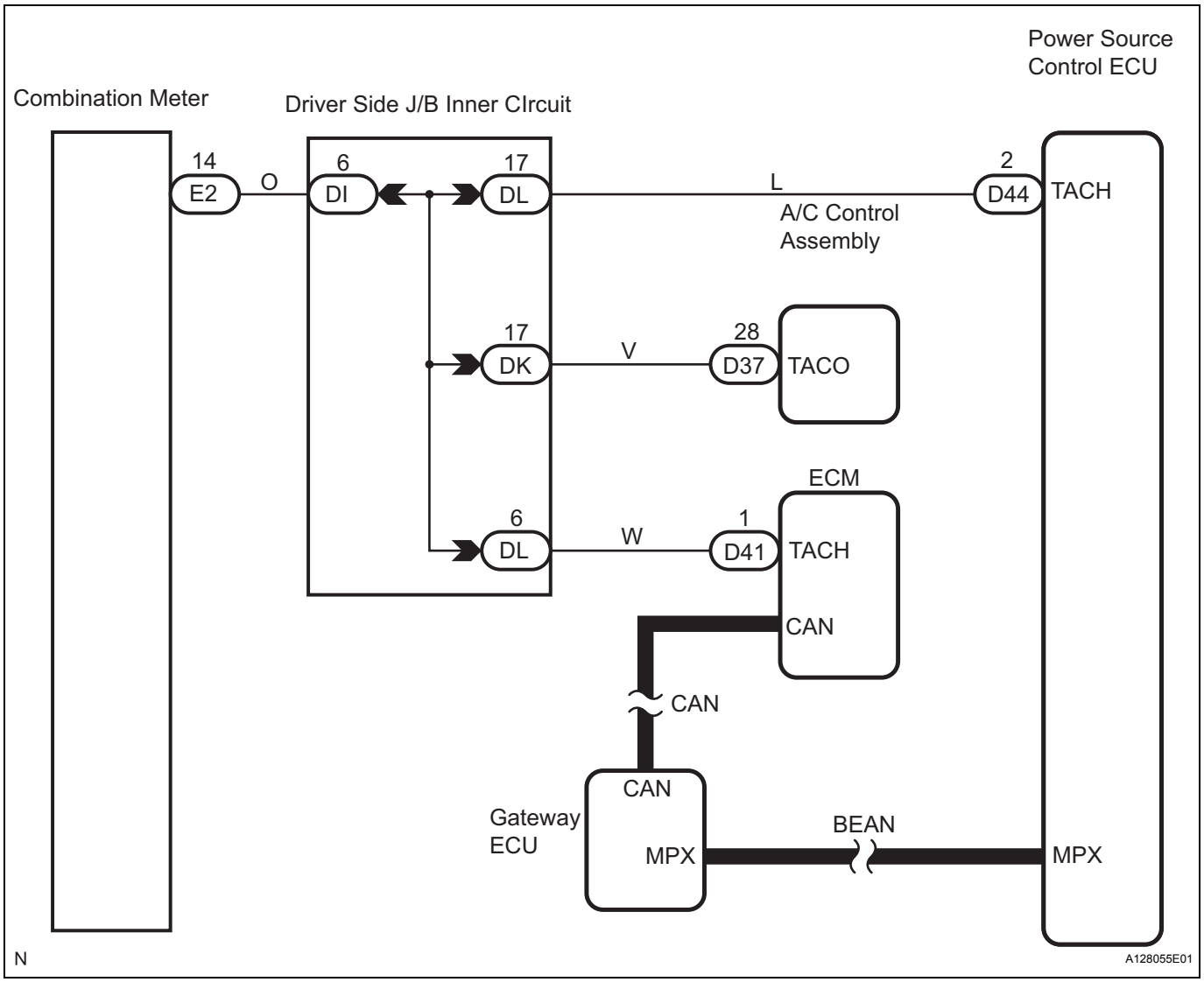

INSPECTION PROCEDURE

1	READ VALUE OF INTELLIGENT TESTER

(a) Connect the intelligent to the DLC3.
(b) Turn the engine switch ON (IG) and press the intelligent tester main switch on.

(c) Read the Data List according to the displays on the tester.

PWR SOURCE CTRL (Power source control ECU):

Item	Measurement Item / Display (Range)	Normal Condition	Diagnostic Note
E/G COND	Engine condition / RUN or STOP	RUN: Engine switch is ON (START) STOP: Engine switch is OFF, ON (IG) or ON (ACC)	-

OK:
"RUN" (engine switch is on (START)) appears on the screen.
"STOP" (engine switch is off, on (IG) or on (ACC)) appears on the screen.

NG → **Go to step 2**

OK

GO TO SFI SYSTEM

2 CHECK WIRE HARNESS (POWER SOURCE CONTROL ECU - ECM)

Power Source Control ECU:

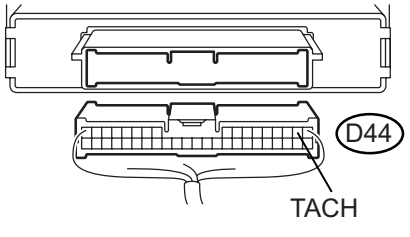

(a) Disconnect the D44 ECU connector.

ECM:

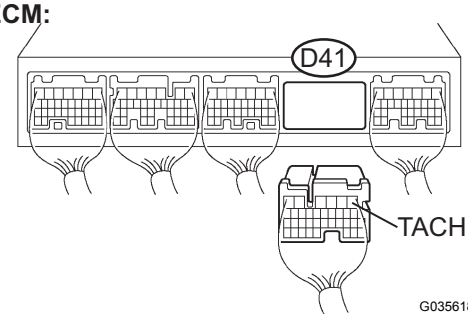

(b) Disconnect the D41 ECM connector.
(c) Measure the resistance according to the value(s) in the table below.

Resistance

Tester Connection	Specified Condition
D44-2 (TACH) - D41-1 (TACH)	Below 1 Ω
D44-2 (TACH) - Body ground	10 kΩ or higher

NG → **REPAIR OR REPLACE HARNESS OR CONNECTOR**

OK

3 CHECK DTC OUTPUT

(a) After replacing the power source control ECU with a normally functioning ECU, check for power source control ECU DTCs.

OK:
Power source control ECU DTCs are not output.

NG → **GO TO SFI SYSTEM**

OK

END (POWER SOURCE CONTROL ECU DEFECTIVE)

DTC	B2287	LIN Communication Master Malfunction

DTC	B2289	Key Collation Waiting Time Over

DESCRIPTION

These DTCs are output when :1) any other DTC is set in the power source control ECU: or 2) the wire harness between the power source control ECU and the certification ECU is open or short.

DTC No.	DTC Detection Condition	Trouble Area
B2287	Communication or communication line is abnormal between power source control ECU and certification ECU	• Power source control ECU • Certification ECU • Wire harness
B2289	Cable and LIN are abnormal between power source control ECU and engine immobilizer function, or engine immobilizer function is malfunctioning	• Power source control ECU • Certification ECU • Wire harness

WIRING DIAGRAM

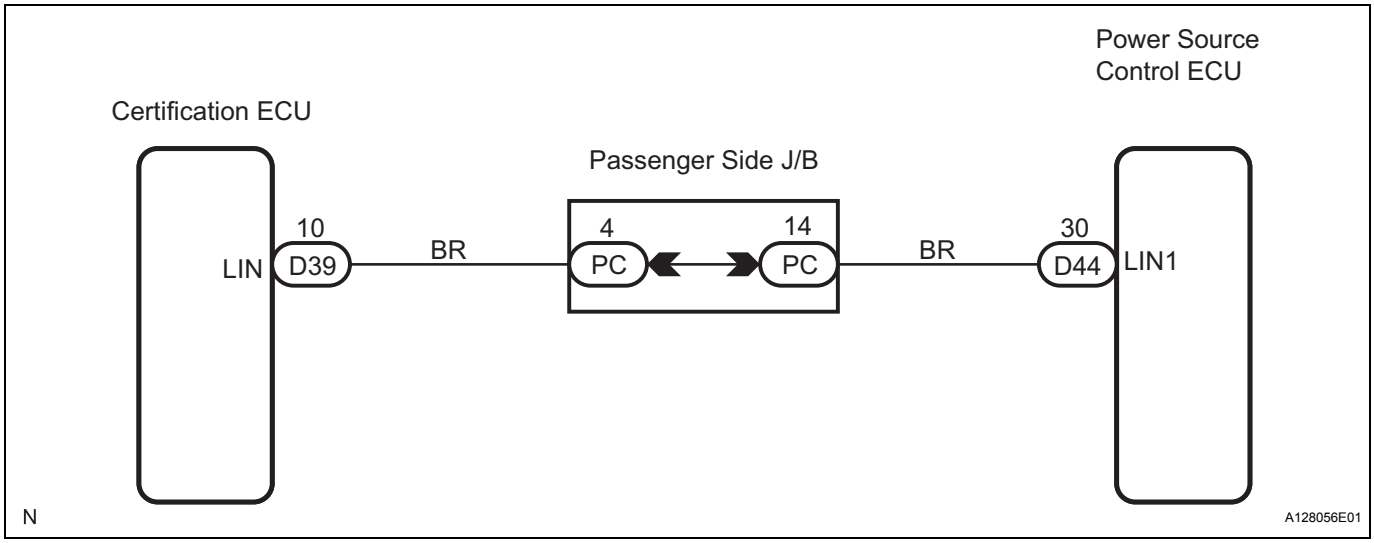

ST

INSPECTION PROCEDURE

1	CHECK WIRE HARNESS (POWER SOURCE CONTROL ECU - CERTIFICATION ECU)

Power Source Control ECU:

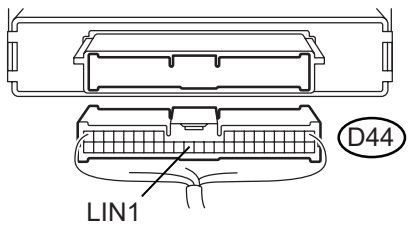

(a) Disconnect the D44 ECU connector.

Combination ECU:

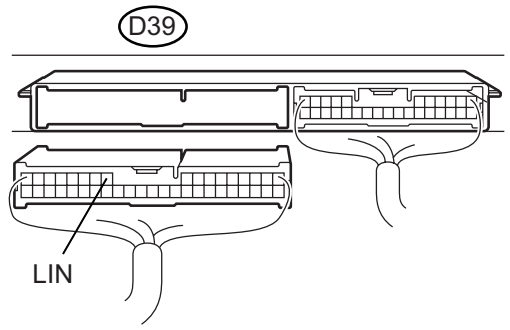

(b) Disconnect the D39 ECU connector.
(c) Measure the resistance according to the value(s) in the table below.

Resistance

Terminal No. (Symbol)	Specified Condition
D44-30 (LIN1) - D39-10 (LIN)	Below 1 Ω
D44-30 (LIN1) - Body ground	10 kΩ or higher

NG → **REPAIR OR REPLACE HARNESS OR CONNECTOR**

OK

2	CHECK POWER SOURCE CONTROL ECU OPERATION

(a) After replacing power source control ECU with a normally functioning ECU, check that the engine starts.

OK:

Engine can start normally.

Result

Condition	Proceed to
OK	A
NG (When troubleshooting according to the DTC B2287)	B
NG (When troubleshooting according to the DTC B2289)	C

ST

B → **REPLACE CERTIFICATION ECU**

C → **GO TO SMART KEY SYSTEM (MATCHING FOR THE INSIDE OF THE CABIN CANNOT BE PERFORMED)**

A

END (POWER SOURCE CONTROL ECU DEFECTIVE)

Engine Switch Indicator Circuit

DESCRIPTION

Engine start conditions or system malfunctions can be checked by the status of the engine switch indicator light.

Engine switch indicator light condition:

Power Source Mode / Condition	Indicator Light Condition	
	No brake pedal depressed	Brake pedal depressed with shift lever in "P" or "N"
OFF	Turn OFF	Turn ON (Green)
ACC, IG-ON, START	Turn ON (Amber)	Turn ON (Green)
Engine Running	Turn OFF	Turn OFF
Steering lock not unlocked	Flash (Green) for 30 seconds	Flash (Green) for 30 seconds
Push Button Start System Malfunction	Flash (Amber) for 15 seconds	Flash (Amber) for 15 seconds

WIRING DIAGRAM

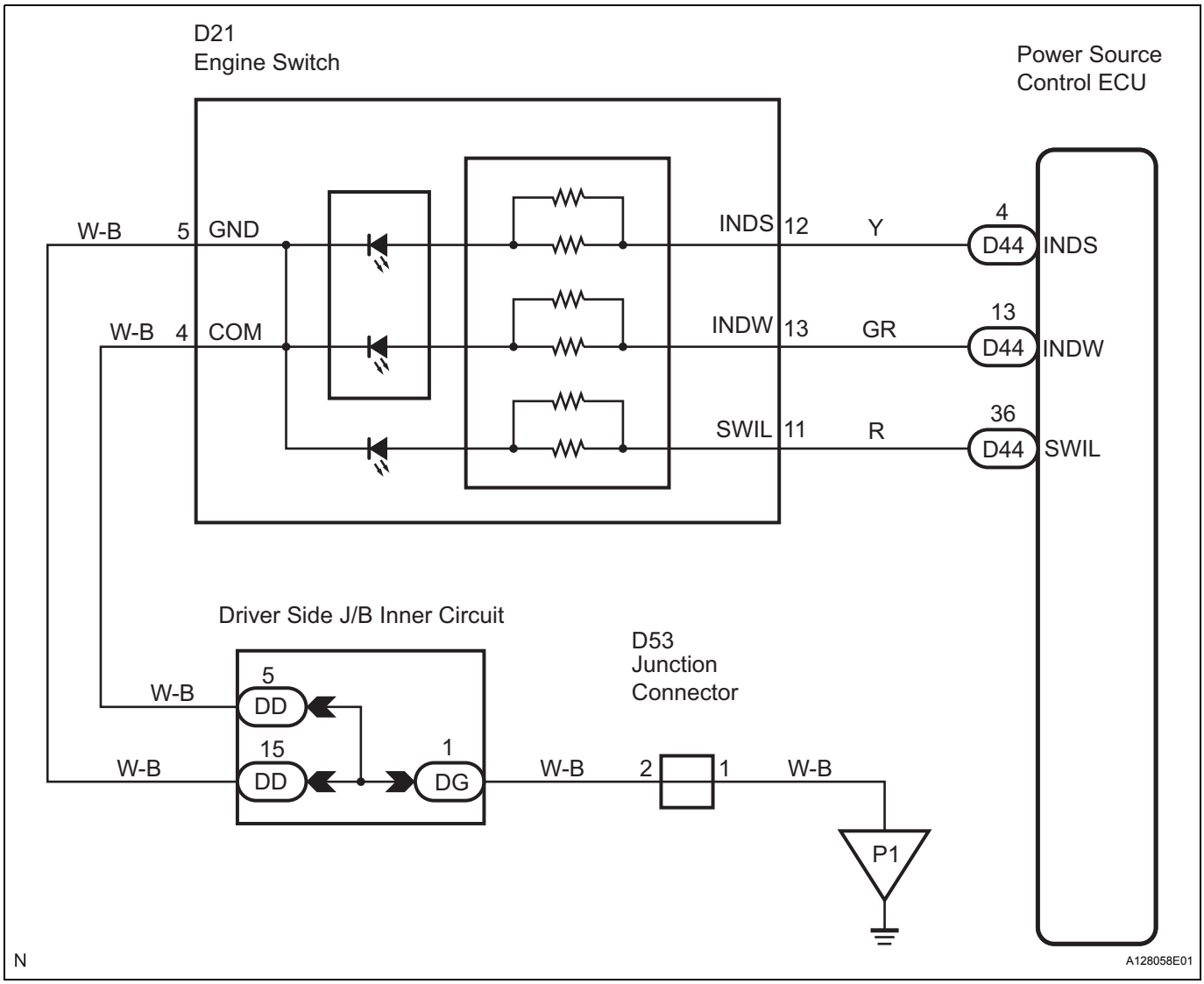

INSPECTION PROCEDURE

1	INSPECT ENGINE SWITCH

Connector Front View:

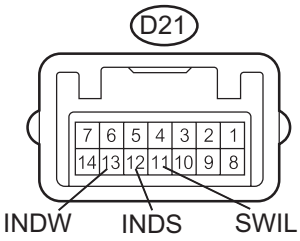

(a) Disconnect the D21 switch connector.
(b) Connect the positive (+) lead to terminal "A" and the negative (-) lead to terminal "B" of the engine switch.
(c) Check if the illumination for the engine switch comes on.
OK

Positive (+) Connection (Symbols)	Negative (-) Connection (Symbols)	Illumination Condition
D21-11 (SWIL)	D21-4 (COM) or D21-5 (GND)	Comes on
D21-12 (INDS)	D21-4 (COM) or D21-5 (GND)	Comes on
D21-13 (INDW)	D21-4 (COM) or D21-5 (GND)	Comes on

NG → REPLACE ENGINE SWITCH

OK

2	CHECK WIRE HARNESS (ENGINE SWITCH - POWER SOURCE CONTROL ECU AND BODY GROUND)

Power Source Control ECU:

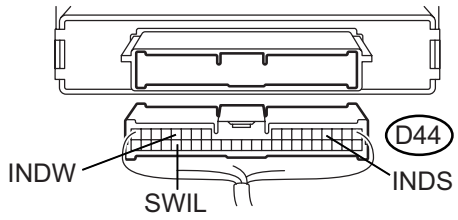

(a) Disconnect the D44 ECU connector.

Engine Switch Wire Harness:

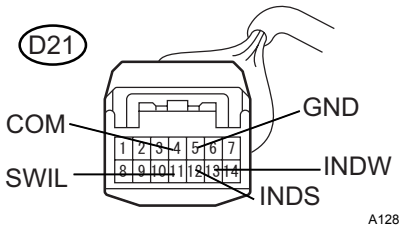

(b) Measure the resistance according to the value(s) in the table below.
Resistance

Tester Connection (Symbols)	Condition	Specified condition
D44-4 (INDS) - D21-12 (INDS)	Always	Below 1 Ω
D44-13 (INDW) - D21-13 (INDW)	Always	Below 1 Ω
D44-36 (SWIL) - D21-11 (SWIL)	Always	Below 1 Ω
D44-4 (INDS) - Body ground	Always	1 MΩ or Higher
D44-13 (INDW) - Body ground	Always	1 MΩ or Higher
D44-36 (SWIL) - Body ground	Always	1 MΩ or Higher

ST

NG → REPAIR OR REPLACE HARNESS OR CONNECTOR

OK

REPLACE POWER SOURCE CONTROL ECU

Starter Relay Circuit

DESCRIPTION

1. Engine Start System Operation

(a) If the brake pedal depressed and the engine switch is pressed with the shift lever in the P or N position, the power source control ECU determines it as an engine start request.
(b) The certification ECU and other ECUs perform key verification via the LIN communication line.
(c) The power source control ECU activates the ACC relay.
(d) The power source control ECU activates the IG1, IG2, and ST CUT relays. The engine switch indicator light lights up in green.
(e) The certification ECU outputs a steering UNLOCK signal. The signal is sent to the steering lock ECU via the power source control ECU.
(f) The power source control ECU sends an engine start request signal to the ECM.
(g) The ECM and power source control ECU activate the ST relay.
(h) The ECM sends an ACC relay cut signal to the power source control ECU.
(i) The power source control ECU deactivates the ACC relay until the ECU detects engine start.
(j) When engine revolution speed reaches 800 rpm, the power source control ECU determines that the engine has been started. The ECU reactivates the ACC relay and turns off the engine switch indicator light.

Symbols of power source control ECU	Signals
STP	Stop light switch ON signal
SSW1 / SSW2	Engine switch ON signal
ACCD	ACC relay operation signal
IG2D	IG2 relay operation signal
STR2	ST relay operation signal
STR1	Park / neutral position switch signal
TACH	Engine start detection signal
STSW	Starter activation request signal
CTSW	ACC relay cut signal

SYSTEM DESCRIPTION

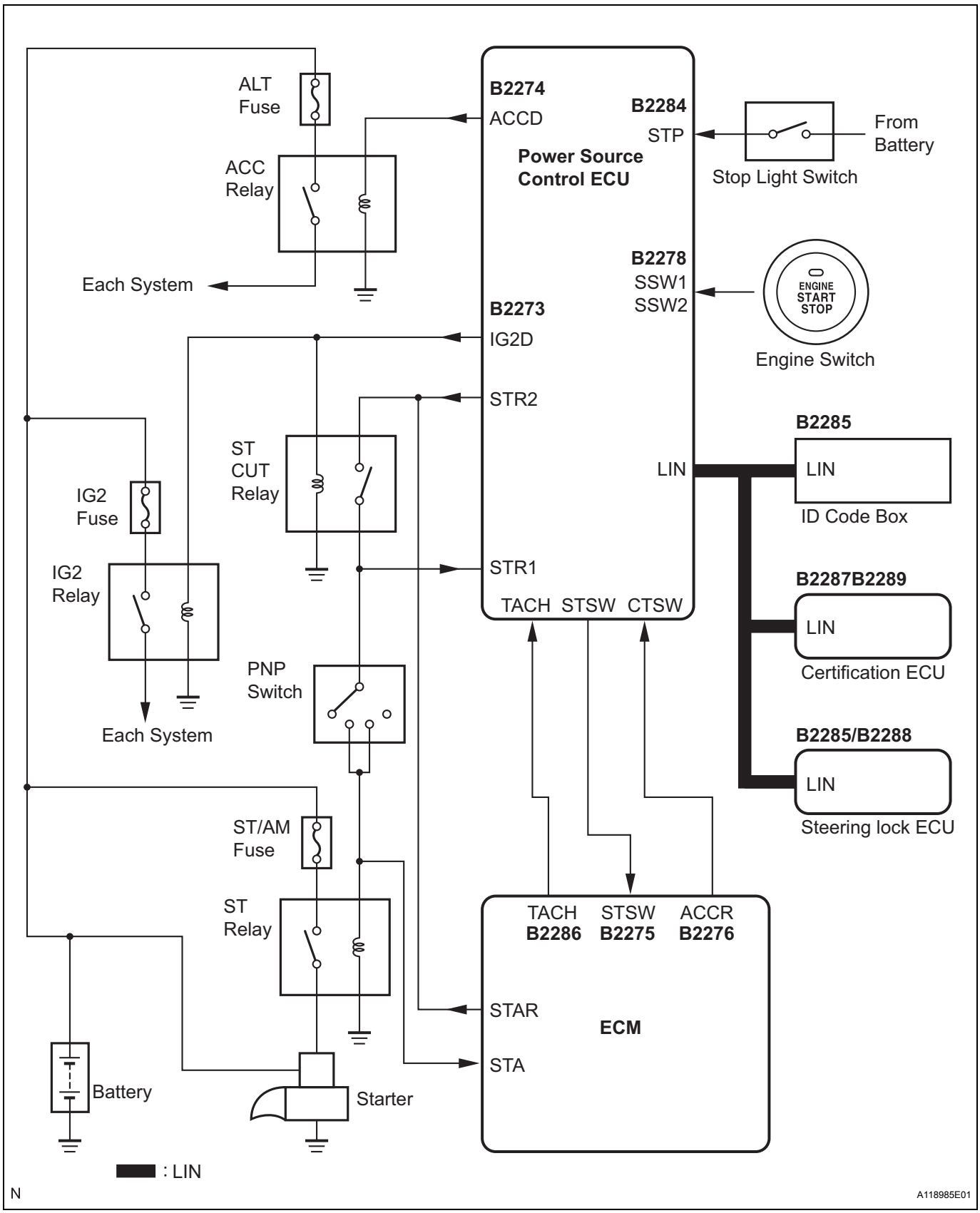

WIRING DIAGRAM

HINT:
See page ES-406.

INSPECTION PROCEDURE

1	CHECK DTC OUTPUT

(a) Delete the DTCs (See page ST-22).
(b) Check for DTCs again.
HINT:
If the engine does not start, check for DTC B2273, B2275, B2278, B2284, B2285, B2287, B2288 and B2289. (For details, see the "DTC check and clear" See page ST-22.)
OK:
No DTC is output.

NG → **GO TO DTC CHART**

OK

GO TO CRANKING HOLDING FUNCTION CIRCUIT

STARTER

COMPONENTS

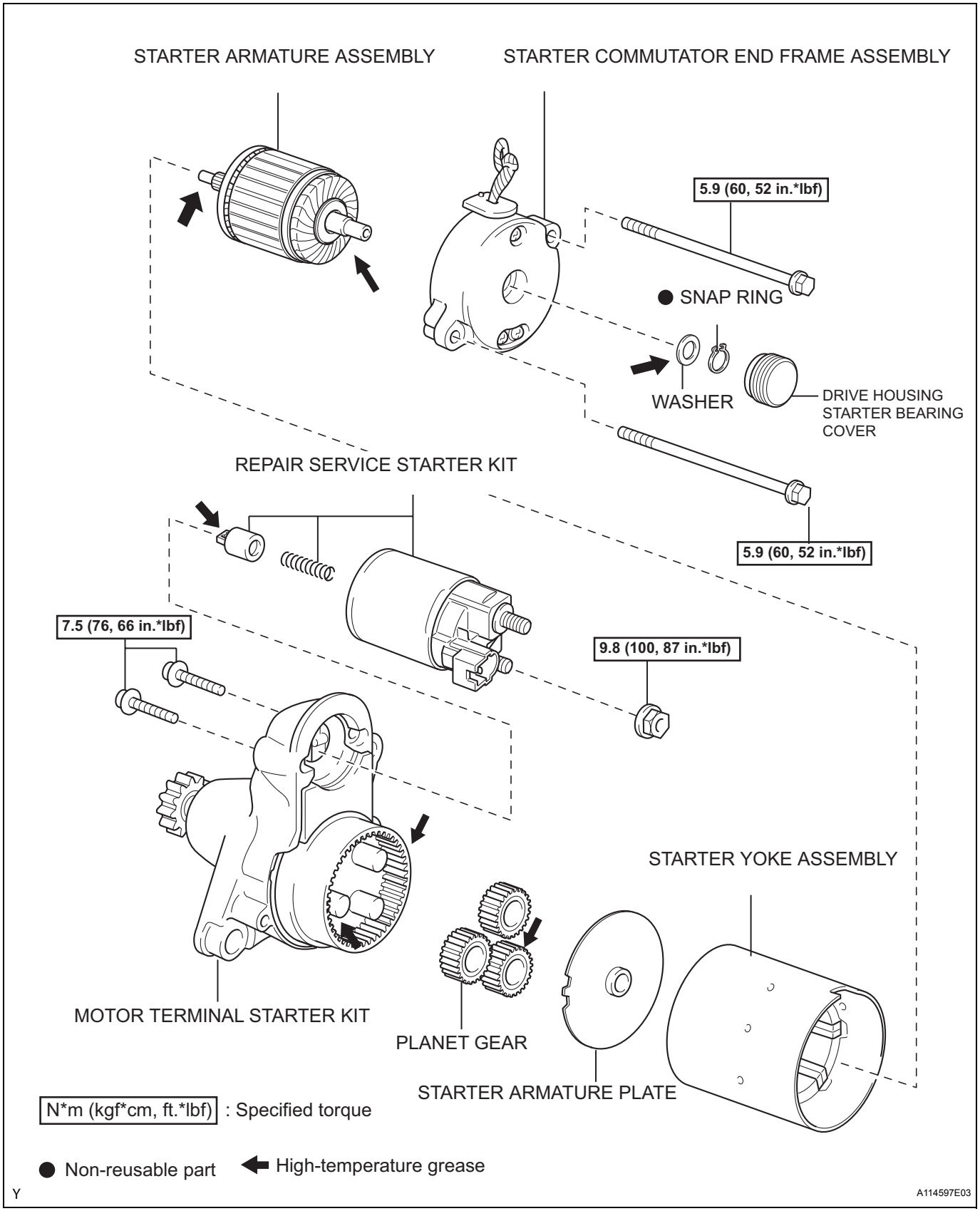

ST

REMOVAL

1. **DISCONNECT BATTERY NEGATIVE TERMINAL**
2. **REMOVE AIR CLEANER ASSEMBLY WITH HOSE (See page EM-28)**
3. **REMOVE AIR CLEANER INLET NO.1 (See page EM-28)**
4. **REMOVE STARTER ASSEMBLY**
   (a) Disconnect terminal 50 of the connector from the starter assembly.
   (b) Open the terminal cap, remove the nut and disconnect the wire harness from terminal 30.

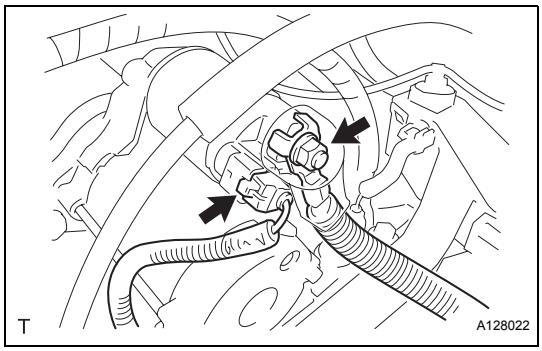

   (c) Remove the 2 bolts and the starter assembly.

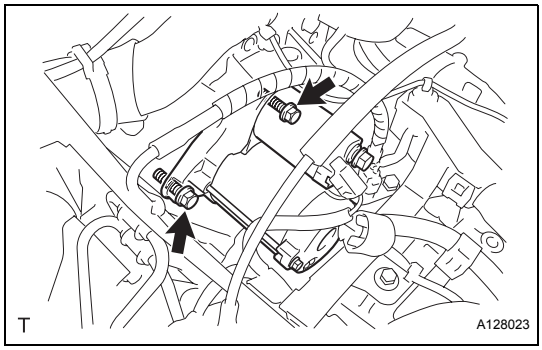

DISASSEMBLY

1. **REMOVE REPAIR SERVICE STARTER KIT**
   (a) Remove the nut and disconnect the lead wire from the repair service starter kit.

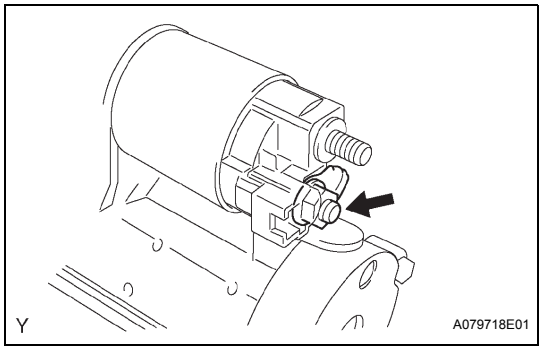

   (b) Remove the 2 screws which are used to secure the repair service starter kit to the repair service starter kit.
   (c) Remove the repair service starter kit.
   (d) Remove the return spring and the plunger from the repair service starter kit.

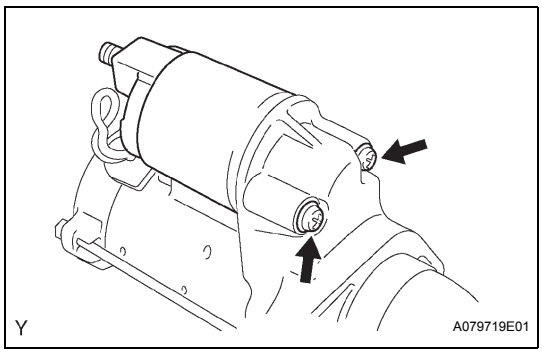

ST

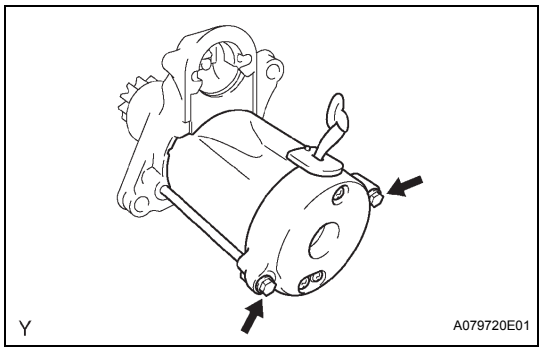

2. REMOVE STARTER YOKE ASSEMBLY

(a) Remove the 2 through bolts and pull out the starter yoke together with the starter commutator end frame.

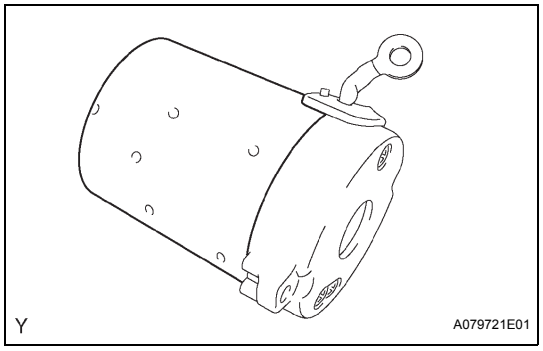

(b) Remove the starter yoke from the starter commutator end frame.

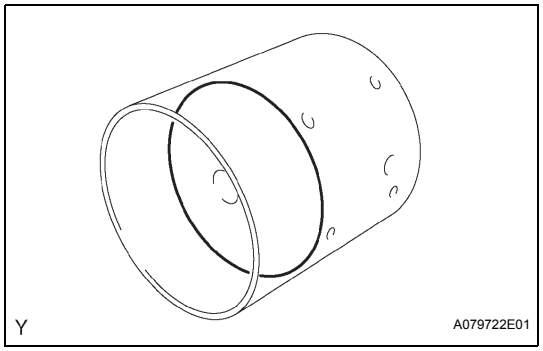

3. REMOVE STARTER ARMATURE PLATE

(a) Remove the starter armature plate from the starter yoke.

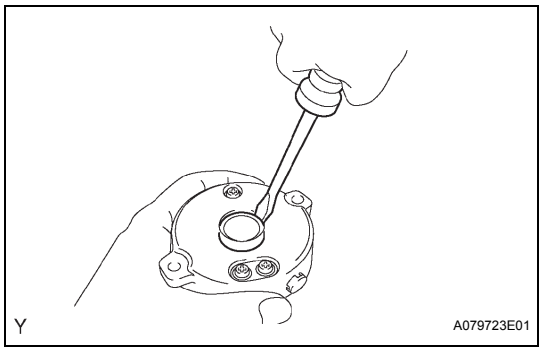

4. REMOVE DRIVE HOUSING STARTER BEARING COVER

(a) Using a screwdriver, remove the drive housing starter bearing cover.

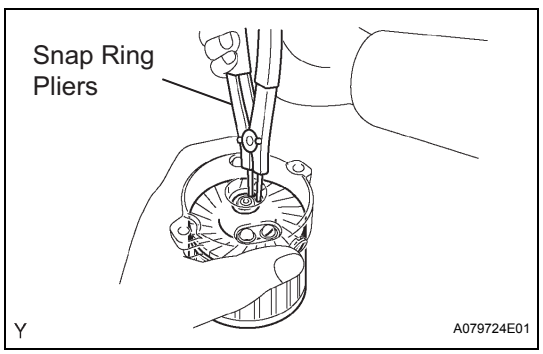

5. REMOVE STARTER ARMATURE ASSEMBLY

(a) Using snap ring pliers, remove the snap ring and the plate washer.

(b) Remove the starter armature from the commutator end frame.

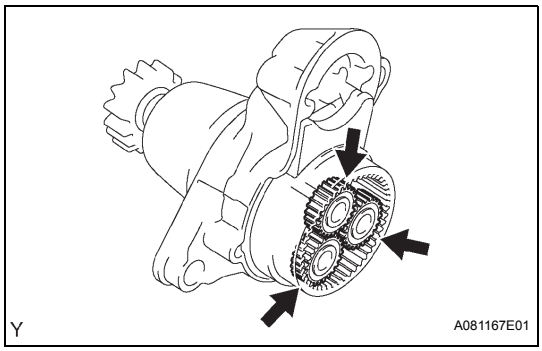

6. REMOVE PLANET GEAR

(a) Remove the 3 planet gears from the motor terminal starter kit.

INSPECTION

1. INSPECT STARTER ASSEMBLY

NOTICE:

These tests must be performed within 3 to 5 seconds to avoid burning out the coil.

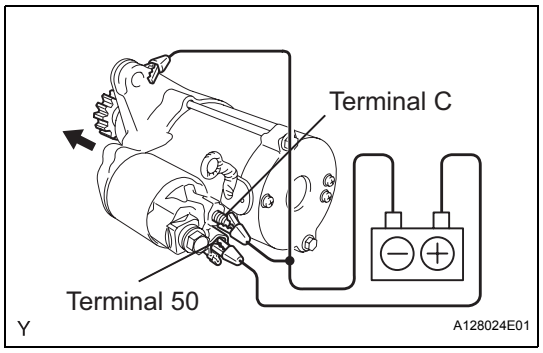

(a) Perform the pull-in test.
   (1) Disconnect the lead wire from terminal C.
   (2) Connect the battery to the magnetic switch as shown in the illustration on the left. Check that the clutch pinion gear extends.
   If the clutch pinion gear does not move, replace the magnetic switch.

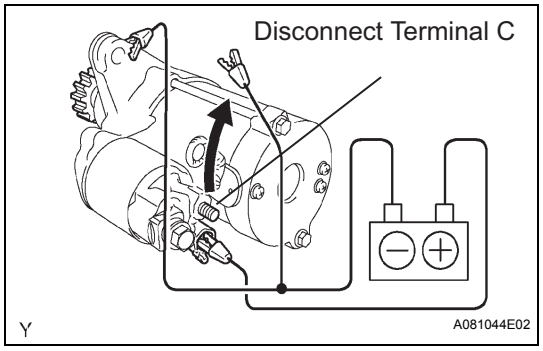

(b) Perform the hold-in test.
   (1) Maintain the battery connections in step (a), but disconnect the negative (-) lead from terminal C. Check that the pinion gear remains extended.
   If the clutch pinion gear returns inward, replace the magnetic switch.

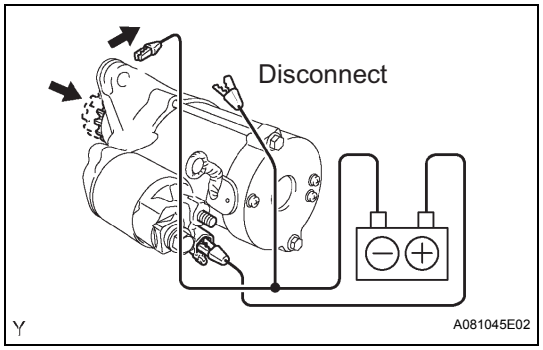

(c) Check the clutch pinion gear return.
   (1) Disconnect the negative (-) lead from the starter body. Check that the clutch pinion gear returns.
   If the clutch pinion gear does not return, replace the magnetic switch.

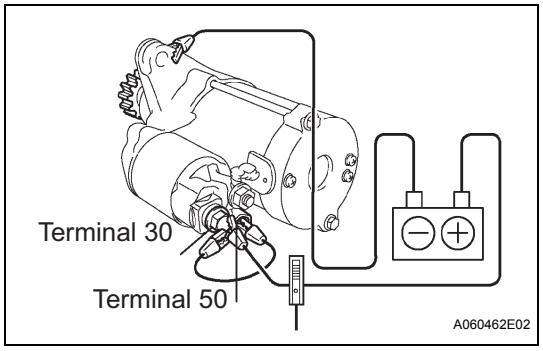

(d) Perform the no-load performance test.
   (1) Connect the lead wire to terminal C. Make sure that the lead is not grounded.
   (2) Clamp the starter in a vise.
   (3) Connect the battery and an ammeter to the starter as shown in the illustration.
   (4) Check that the starter rotates smoothly and steadily with the clutch pinion gear extended. Check that the ammeter reads the specified current.
   Specified current:
   90 A or less at 11.5V
   If the result is not as specified, replace the starter assembly.

ST

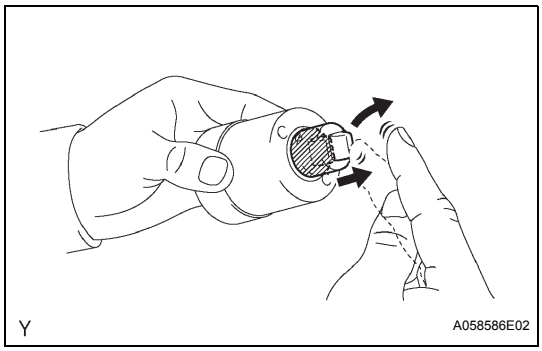

2. INSPECT REPAIR SERVICE STARTER KIT

(a) Check the plunger.

(1) Push in the plunger and check that it returns quickly to its original position.
If necessary, replace the repair service starter kit.

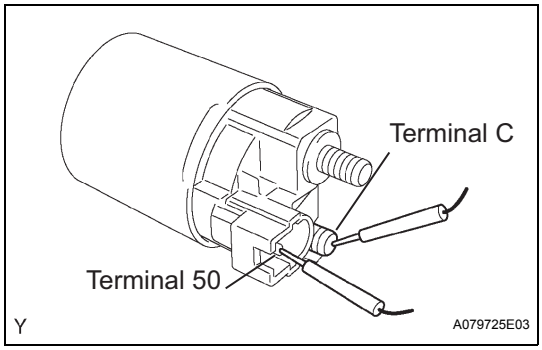

(b) Check the resistance.

(1) Using an ohmmeter, measure the resistance between terminals 50 and C.
Resistance:
below 1 Ω
If the result is not as specified, replace the repair service starter kit.

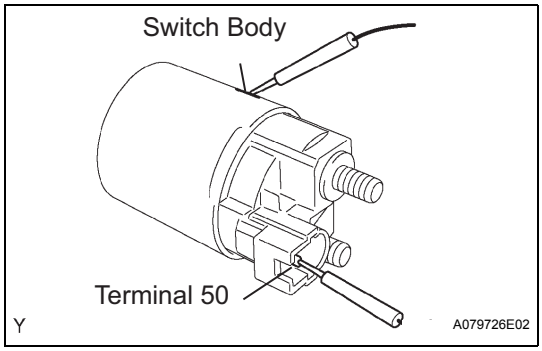

(c) Using an ohmmeter, measure the resistance between terminal 50 and the starter kit body.
Resistance:
below 2 Ω
If the result is not as specified, replace the repair service starter kit.

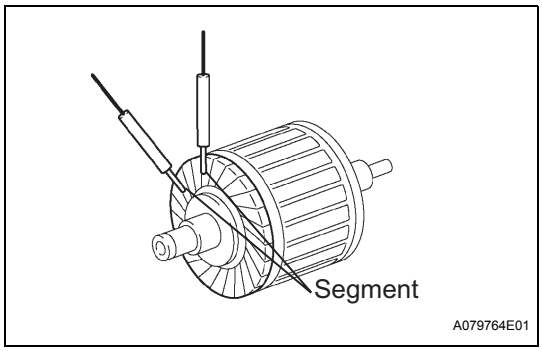

3. INSPECT STARTER ARMATURE ASSEMBLY

(a) Check the resistance.

(1) Using an ohmmeter, measure the resistance between the segments of the commutator.
Resistance:
below 1 Ω
If the result is not as specified, replace the starter armature.

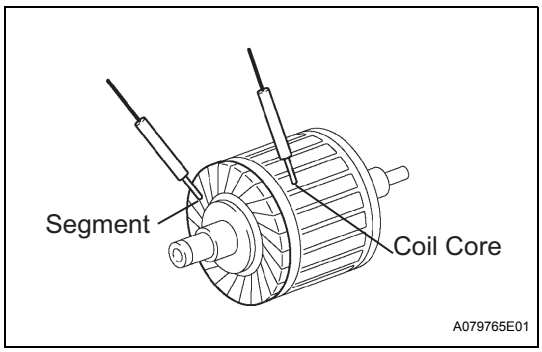

(b) Using an ohmmeter, measure the resistance between the segment of the commutator and armature coil core.
Resistance:
10 kΩ or higher
If the result is not as specified, replace the starter armature.

(c) Check the commutator surface for dirt or burning.
If the surface is dirty or burnt, smooth the surface with 400-grit sandpaper or leather.

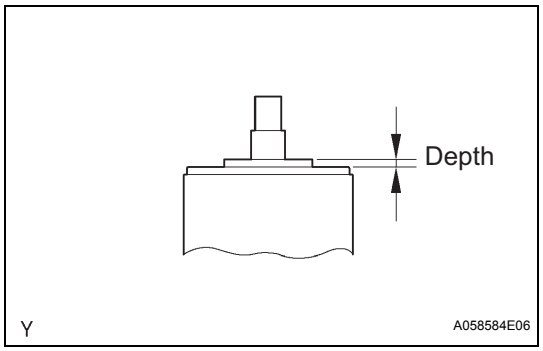

(d) Check the commutator depth.
(1) Using vernier calipers, measure the commutator depth.
Standard depth:
3.1 mm (0.122 in.)
Maximum depth:
3.8 mm (0.150 in.)
If the length is greater than the maximum, replace the starter armature assembly.

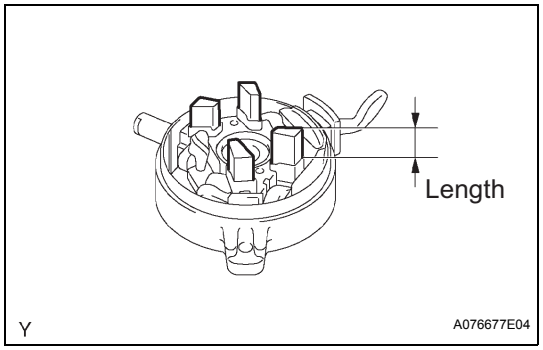

4. INSPECT STARTER COMMUTATOR END FRAME ASSEMBLY

(a) Check the brush length.
(1) Using vernier calipers, measure the brush length.
Standard length:
9.0 mm (0.354 in.)
Minimum length:
4.0 mm (0.158 in.)
If the length is less than minimum, replace the starter commutator end frame.

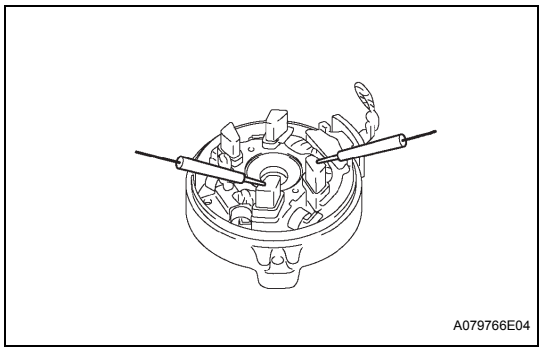

(b) Check the resistance.
(1) Using an ohmmeter, measure the resistance between the positive (+) and negative (-) brushes.
Resistance:
10 KΩ or higher
If the resistance is not as specified, repair or replace the starter commutator end frame.

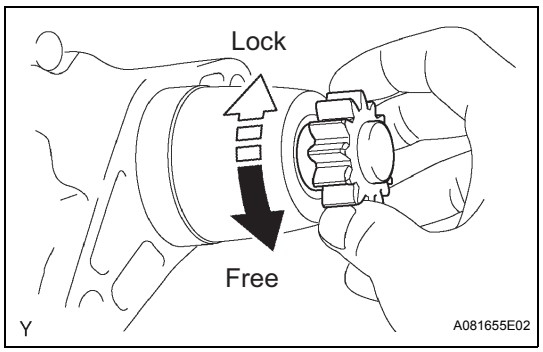

5. INSPECT MOTOR TERMINAL STARTER KIT

(a) Check the starter clutch.
(1) Rotate the clutch pinion gear counterclockwise and check that it turns freely. Try to rotate the clutch pinion gear clockwise. Check that it locks.
If necessary, replace the motor terminal starter kit.

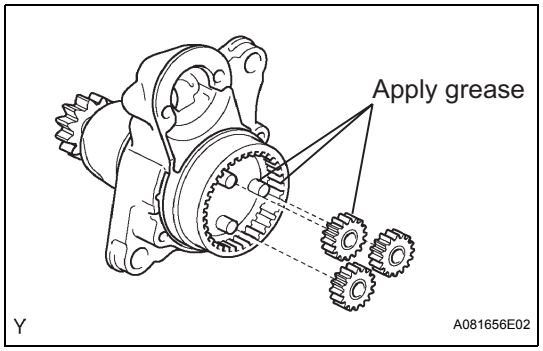

REASSEMBLY

1. INSTALL PLANET GEAR

(a) Apply high-temperature grease to the planet gears and pin parts of the planetary shaft.
(b) Install the 3 planet gears to the motor terminal starter kit.

ST

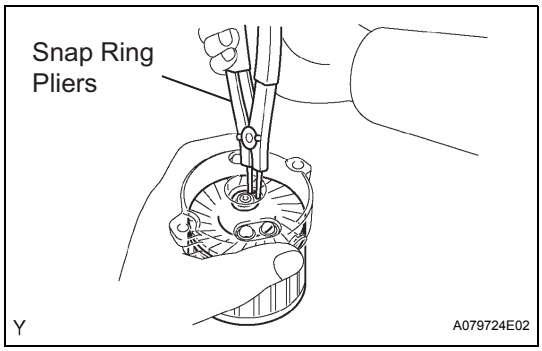

2. INSTALL STARTER ARMATURE ASSEMBLY

(a) Apply high-temperature grease to the plate washer and the armature shaft.

(b) Install the starter armature to the starter commutator end frame.

(c) Using snap ring pliers, install the plate washer and a new snap ring.

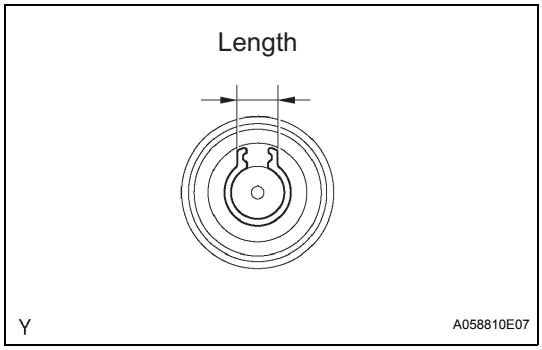

(d) Using vernier calipers, measure the snap ring.
Maximum length:
5.0 mm (0.197 in.)
If the length is greater than the maximum, replace the snap ring.

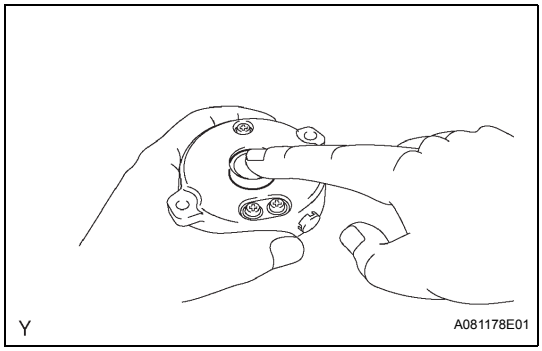

3. INSTALL DRIVE HOUSING STARTER BEARING COVER

(a) Install the drive housing starter bearing cover to the starter commutator end frame.

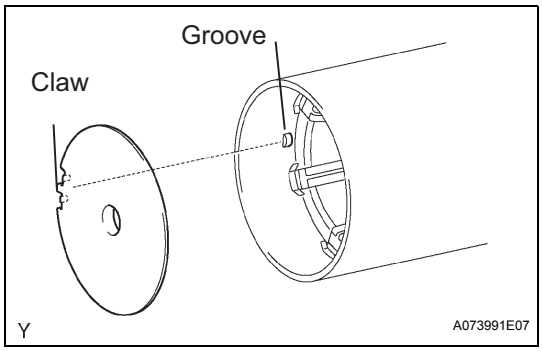

4. INSTALL STARTER ARMATURE PLATE

(a) Align the claw of the armature plate with the groove inside the starter yoke, and install the starter armature plate.

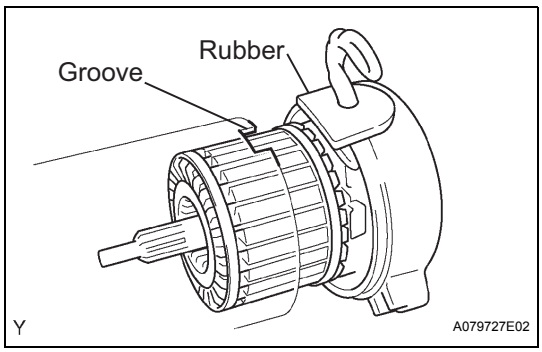

5. INSTALL STARTER COMMUTATOR END FRAME ASSEMBLY

(a) Align the starter commutator end frame rubber with the groove of the starter yoke.

(b) Install the starter commutator end frame to the starter yoke.
NOTICE:
The magnet of the starter yoke may attract the starter armature when the starter commutator end frame is installed, causing the magnet to break.

ST

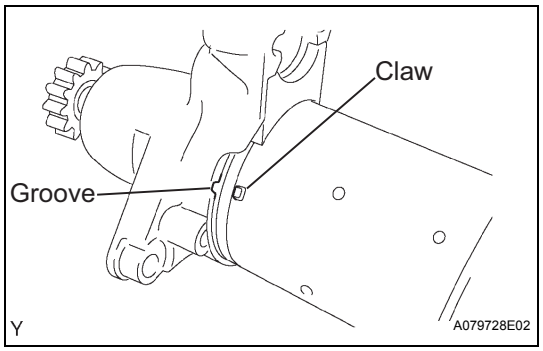

6. INSTALL STARTER YOKE ASSEMBLY

(a) Align the claw of the starter yoke with the groove inside the motor terminal starter kit.

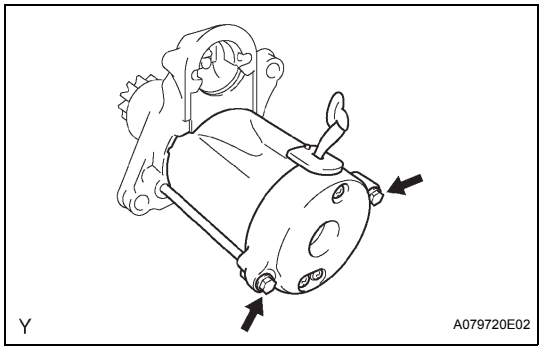

(b) Install the starter yoke with the 2 through bolts.
Torque: 5.9 N*m (60 kgf*cm, 52 in.*lbf)

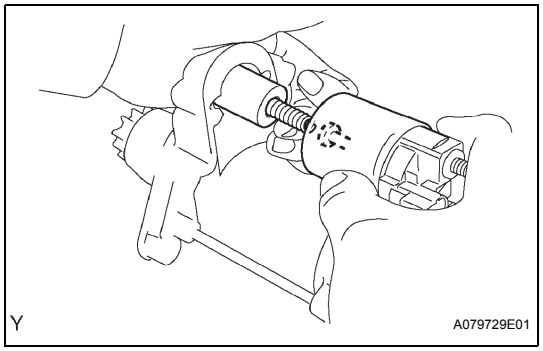

7. INSTALL REPAIR SERVICE STARTER KIT

(a) Apply high-temperature grease to the plunger and the hook.

(b) Hang the plunger hook of the repair service starter kit to the drive lever hook.

(c) Install the plunger and the return spring.

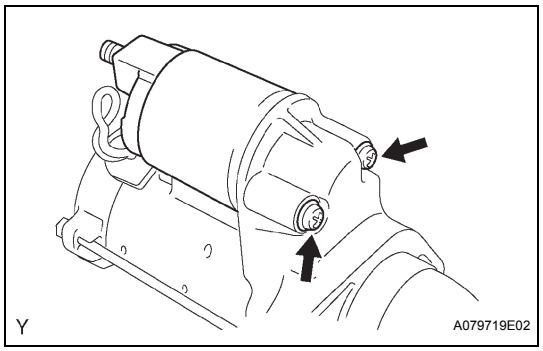

(d) Install repair service starter kit with the 2 screws.
Torque: 7.5 N*m (76 kgf*cm, 66 in.*lbf)

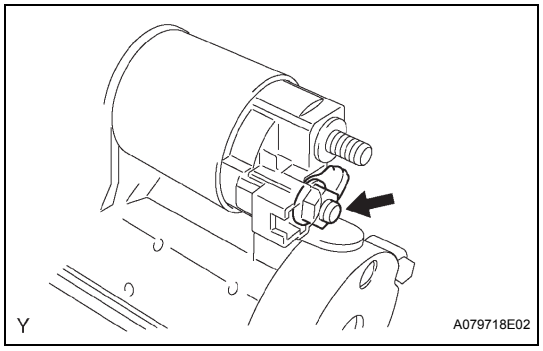

(e) Connect the lead wire to the repair service starter kit with the nut.
Torque: 9.8 N*m (100 kgf*cm, 87 in.*lbf)

ST

INSTALLATION

1. **INSTALL STARTER ASSEMBLY**
   (a) Install the starter assembly with the 2 bolts.
   Torque: 37 N*m (380 kgf*cm, 26 ft.*lbf)
   (b) Connect the wire harness to terminal 30 and install the nut.
   Torque: 9.8 N*m (100 kgf*cm, 87 in.*lbf)
   (c) Cover the nut with the cap.
   (d) Connect terminal 50 to the starter assembly.
2. **INSTALL AIR CLEANER INLET NO.1 (See page EM-44)**
3. **INSTALL AIR CLEANER ASSEMBLY WITH HOSE (See page EM-44)**
4. **CONNECT BATTERY NEGATIVE TERMINAL**
5. **PERFORM INITIALIZATION**
   HINT:
   See page IN-29
   (a) Some systems need initialization when disconnecting the battery terminal.

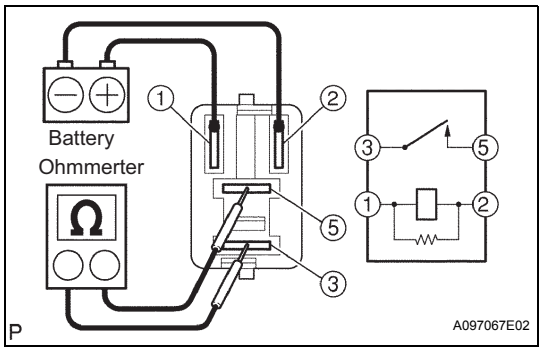

STARTER RELAY

ON-VEHICLE INSPECTION

1. INSPECT RELAY

(a) Check the resistance.

(1) Using an ohmmeter, measure the resistance between the terminals.

Resistance

Tester Connection	Specified Condition
3 - 5	10 kΩ or higher
3 - 5	Below 1 Ω (when battery voltage is applied between terminals 1 and 2)

If the result is not as specified, replace the relay.

ENGINE SWITCH (w/ Smart Key System)

COMPONENTS

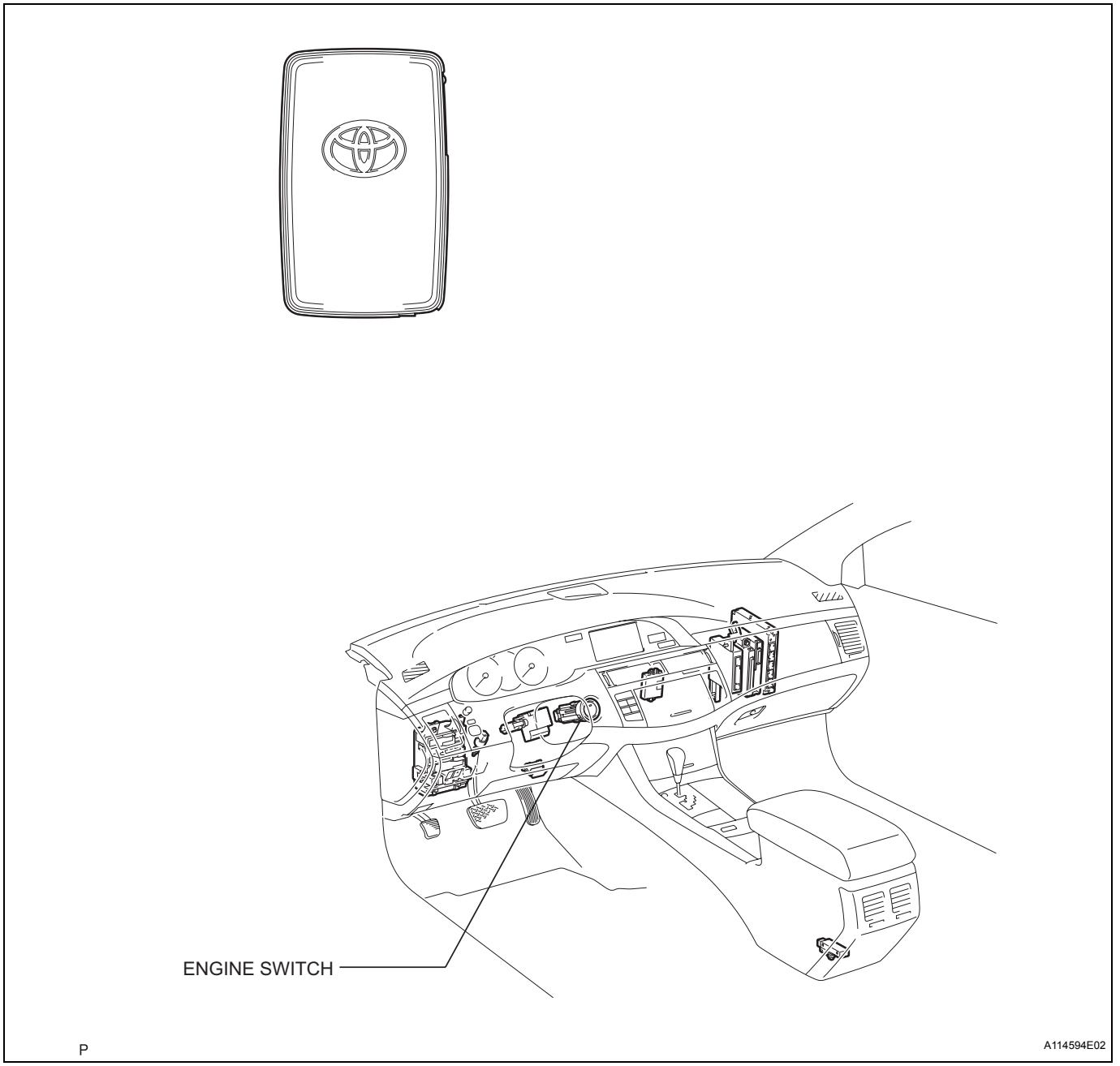

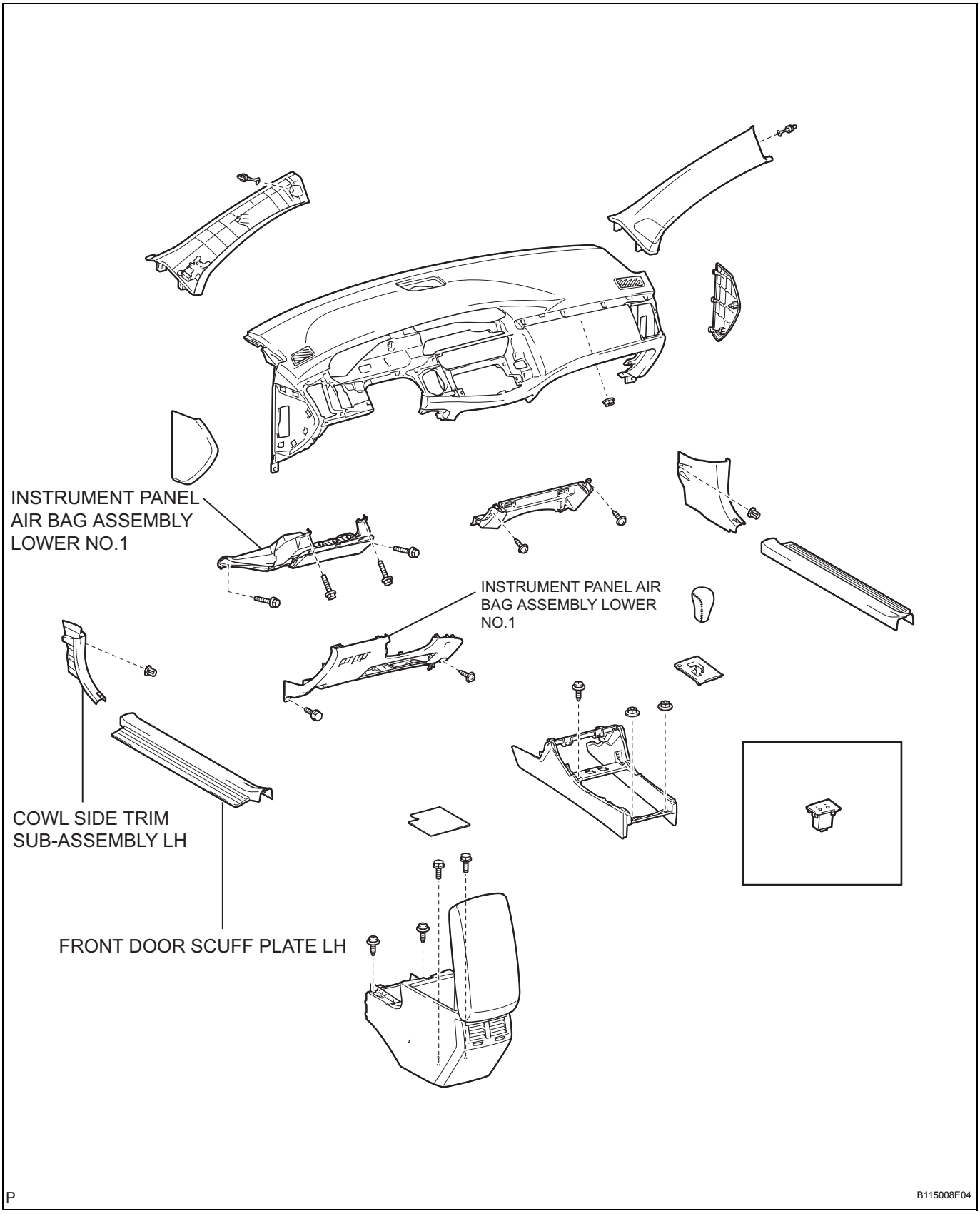
INSTRUMENT PANEL AIR BAG ASSEMBLY LOWER NO.1
INSTRUMENT PANEL AIR BAG ASSEMBLY LOWER NO.1
COWL SIDE TRIM SUB-ASSEMBLY LH
FRONT DOOR SCUFF PLATE LH
P
B115008E04

ST

REMOVAL

1. **PRECAUTION**
   HINT:
   See page RS-1
2. **DISCONNECT BATTERY NEGATIVE TERMINAL**
3. **REMOVE FRONT DOOR SCUFF PLATE LH (See page IR-12)**
4. **REMOVE COWL SIDE TRIM SUB-ASSEMBLY LH (See page IR-12)**
5. **REMOVE INSTRUMENT PANEL FINISH LOWER PANEL LH (See page IP-12)**
6. **REMOVE INSTRUMENT PANEL AIR BAG ASSEMBLY LOWER NO.1**
7. **REMOVE ENGINE SWITCH**
   (a) Disconnect the engine switch connector.
   (b) Disengage the 2 clips and remove the switch.

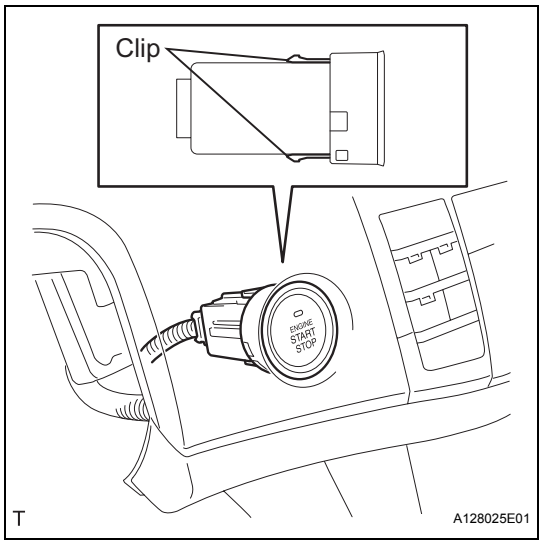

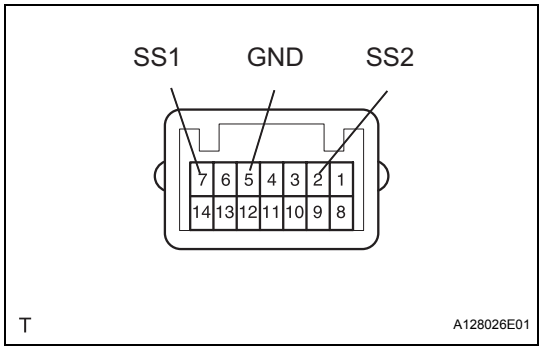

INSPECTION

1. **ENGINE SWITCH**
   (a) Using an ohmmeter, measure the engine switch resistance.
   Resistance

Engine switch Operation	Tester Connection	Specified Condition
OFF	7 (SS1) - 5 (GND)	10 kΩ or higher
OFF	2 (SS2) -5 (GND)	10 kΩ or higher
ON	7 (SS1) - 5 (GND)	Below 1 Ω
ON	2 (SS2) - 5 (GND)	Below 1 Ω

If the result is not as specified, replace the switch assembly.

ST

INSTALLATION

1. **INSTALL ENGINE SWITCH**
   (a) Install the engine switch.
   (b) Connect the engine switch connector.
2. **INSTALL INSTRUMENT PANEL AIR BAG ASSEMBLY LOWER NO.1**
3. **INSTALL INSTRUMENT PANEL FINISH LOWER PANEL LH**
4. **INSTALL COWL SIDE TRIM SUB-ASSEMBLY LH**
5. **INSTALL FRONT DOOR SCUFF PLATE LH**
6. **CONNECT BATTERY NEGATIVE TERMINAL**
7. **INSPECT SRS WARNING LIGHT**
   HINT:
   See page RS-28
8. **PERFORM INITIALIZATION**
   HINT:
   See page IN-29
   (a) Some systems need initialization when disconnecting the battery terminal.

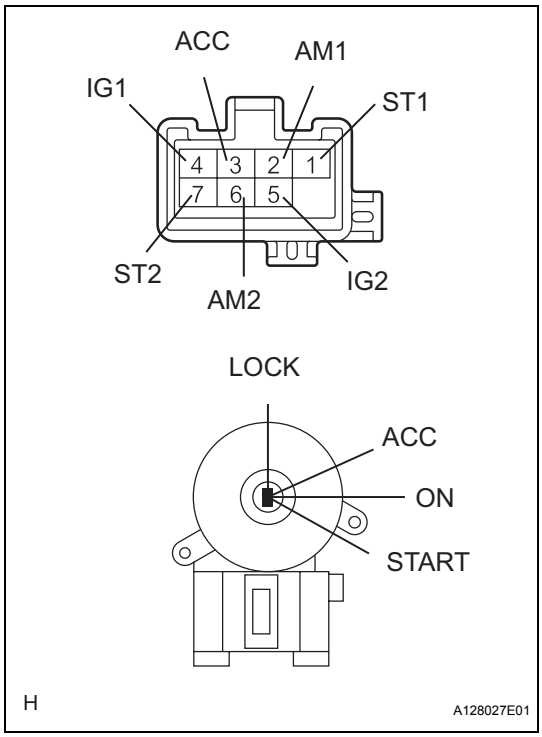

IGNITION SWITCH (w/o Smart Key System)

INSPECTION

1. INSPECT IGNITION OR STATER SWITCH ASSEMBLY

(a) Measure the switch resistance.

Resistance

Switch Condition	Tester Connection	Specified Condition
LOCK	**-**	**10 kΩ or higher**
ACC	**1 (ST1) - 3 (ACC)**	**Below 1 Ω**
ON	**1 (ST1) - 2 (AM1)** **1 (ST1) - 3 (ACC)** **5 (IG2) - 6 (AM2)**	**Below 1 Ω**
START	**1 (ST1) - 2 (AM1)** **4 (IG1) - 5 (IG2)** **5 (IG2) - 6 (AM2)**	**Below 1 Ω**

If the result is not as specified, replace the ignition or starter switch assembly.

STEERING SYSTEM

PRECAUTION

1. HANDLING PRECAUTIONS FOR STEERING SYSTEM

(a) Care must be taken when replacing parts. Incorrect replacement may affect the performance of the steering system and result in driving hazards.

2. HANDLING PRECAUTIONS FOR SRS AIRBAG SYSTEM

(a) The AVALON is equipped with SRS (Supplemental Restraint System) such as the driver airbag and front passenger airbag. Failure to carry out service operations in the correct sequence could cause the SRS airbags to unexpectedly deploy during servicing. This may cause a serious accident. Before servicing (including inspection, replacement, removal and installation of parts), be sure to read the precautionary notices for the Supplemental Restraint System (See page RS-1).

PROBLEM SYMPTOMS TABLE

AXLE SYSTEM

Use the table below to help determine the cause of the problem. The numbers indicate the priority of the likely causes of the problem. Check each part in order. If necessary, repair or replace the faulty parts.

Symptom	Suspected area	See page
Hard steering	1. Tires (Improperly inflated)	TW-2
	2. Power steering fluid level (Low)	PS-3
	3. Drive belt (Loose)	EM-8
	4. Front wheel alignment (Incorrect)	SP-4
	5. Steering system joints (Worn)	-
	6. Suspension arm ball joints (Worn)	SP-25
	7. Steering column (Binding)	SR-43
	8. Power steering vane pump	PS-12
	9. Power steering gear	PS-28
Poor return	1. Tires (Improperly inflated)	TW-2
	2. Front wheel alignment (Incorrect)	SP-4
	3. Steering column (Binding)	SR-43
	4. Power steering gear	PS-28
Excessive free play	1. Steering system joints (Worn)	-
	2. Suspension arm ball joints (Worn)	SP-25
	3. Intermediate shaft, Sliding yoke (Worn)	SR-39
	4. Front wheel bearing (Worn)	AH-15
	5. Power steering gear	PS-28
Abnormal noise	1. Power steering fluid level (Low)	PS-4
	2. Steering system joints (Worn)	-
	3. Power steering vane pump	PS-12
	4. Power steering gear	PS-28

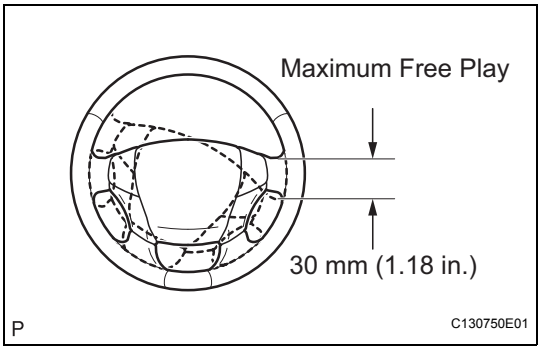

ON-VEHICLE INSPECTION

1. CHECK STEERING WHEEL FREE PLAY

(a) Stop the vehicle and align the tires facing straight ahead.

(b) Gently turn the steering wheel right and left by hand, and check the steering wheel free play.

Maximum Free Play :

30 mm (1.18 in.)

If free play exceeds the maximum, replace the steering intermediate shaft assembly or steering gear.

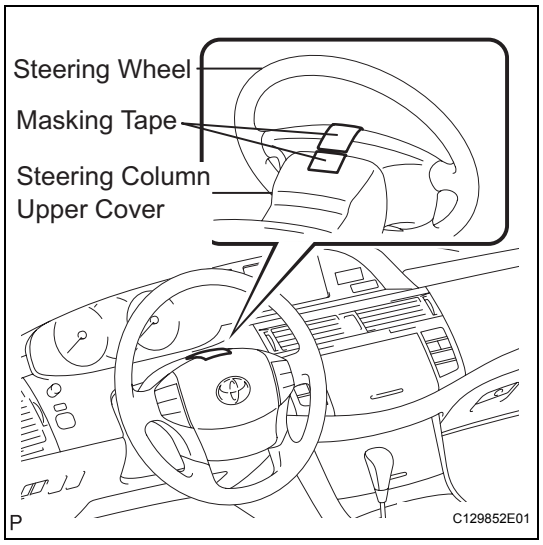

REPAIR

1. STEERING OFF CENTER REPAIR PROCEDURE

(a) Inspect steering wheel off center.

(1) Apply masking tape on the top center of the steering wheel and steering column upper cover.

(2) Drive the vehicle in a straight line for 100 meters at a constant speed of 35 mph (56 km/h), and hold the steering wheel to maintain the course.

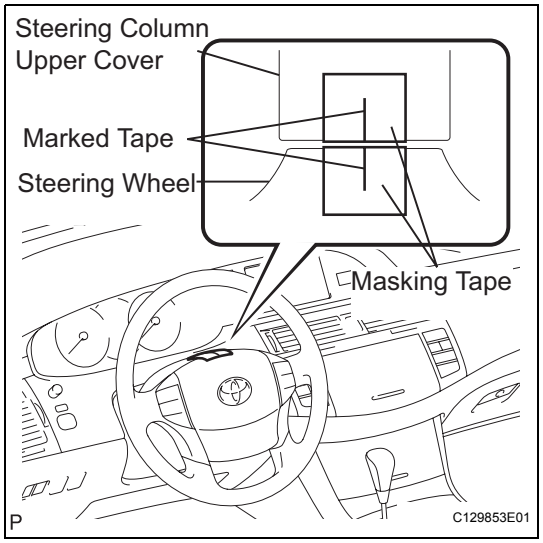

(3) Draw a line on the masking tape as shown in the illustration.

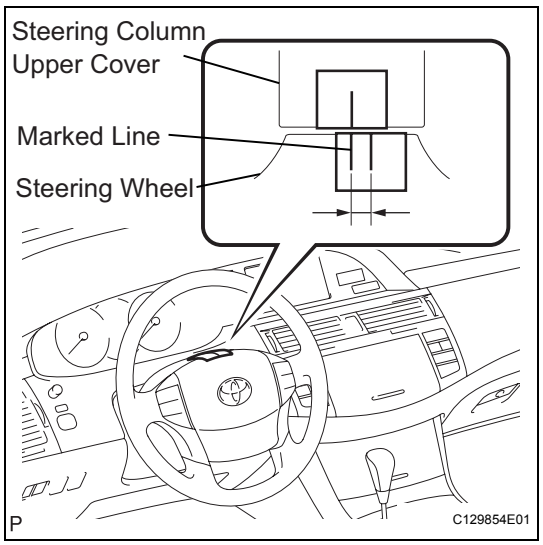

(4) Turn the steering wheel to the center position.
HINT:
Look at the upper surface of the steering wheel, steering spoke and SRS airbag line to find the center position.

(5) Draw a new line on the masking tape on the steering wheel as shown in the illustration.

(6) Measure the distance between the 2 lines on the masking tape on the steering wheel.

(7) Convert the measured distance to steering angle.
HINT:
Measured distance 1 mm (0.04 in.) = Steering angle of approximately 1 degree
Make a note of the steering angle.

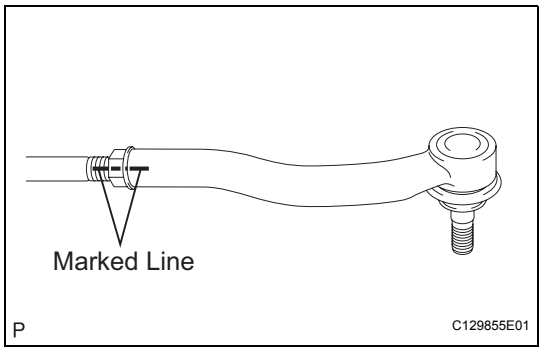

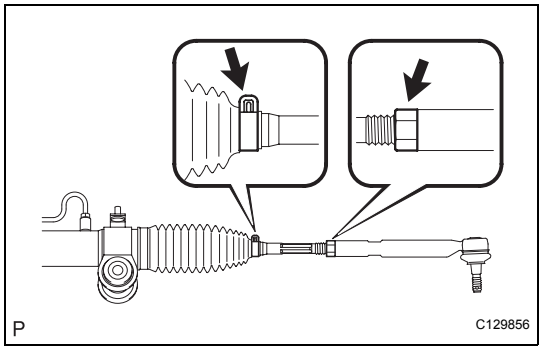

(b) Adjust steering angle.
  (1) Draw a line on the RH and LH tie rod ends and rack ends respectively where it can be easily seen.
  (2) Using a paper gauge, measure the distance from the RH and LH tie rod ends to the rack end screws.
  HINT:
  - Measure both the RH and LH sides.
  - Make a note of the measured values.

  (3) Remove the RH and LH boot clips from the rack boots.
  (4) Loosen the RH and LH lock nuts.
  (5) Turn the RH and LH rack ends by the same amount (but in different directions) according to the steering angle.
  HINT:
  One 360 degree turn of rack end (1.5 mm (0.059 in.) horizontal movement) equals to 12 degrees of steering angle.
  (6) Tighten the RH and LH lock nuts to the specified torque.
  Torque: 74 N*m (750 kgf*cm, 54 ft.*lbf)
  NOTICE:
  Make sure that the difference in length between the RH and LH tie rod ends and rack end screws is within 1.5 mm (0.059 in.).
  (7) Install the RH and LH boot clips.
  (8) Perform steering angle sensor zero point calibration (w/ VSC).

ELECTRIC STEERING LOCK

PRECAUTION

NOTICE:
When the negative (-) battery cable is disconnected, initialize the following systems after the cable is reconnected.

System Name	See Procedure
Power Window Control System	(See page IN-29)
Sliding Roof System	

1. PRECAUTIONS WHEN WORKING ON ELECTRIC STEERING LOCK

(a) After replacing the steering lock actuator assembly, perform the code registration (See page EI-6)

(b) If checking for electric steering lock DTCs or checking the data list with the engine switch off, make sure that the driver's door is open.
HINT:
When the engine switch is off, the body ECU to which the intelligent tester is to be connected may not be working. Communication with the intelligent tester is impossible if the body ECU is not working.

(c) If the steering lock ECU is replaced, open and close the driver's door. The engine may not start until either operation is performed.
HINT:
Performing the above operation causes the steering lock ECU to memorize the correct steering lock bar position.

PARTS LOCATION

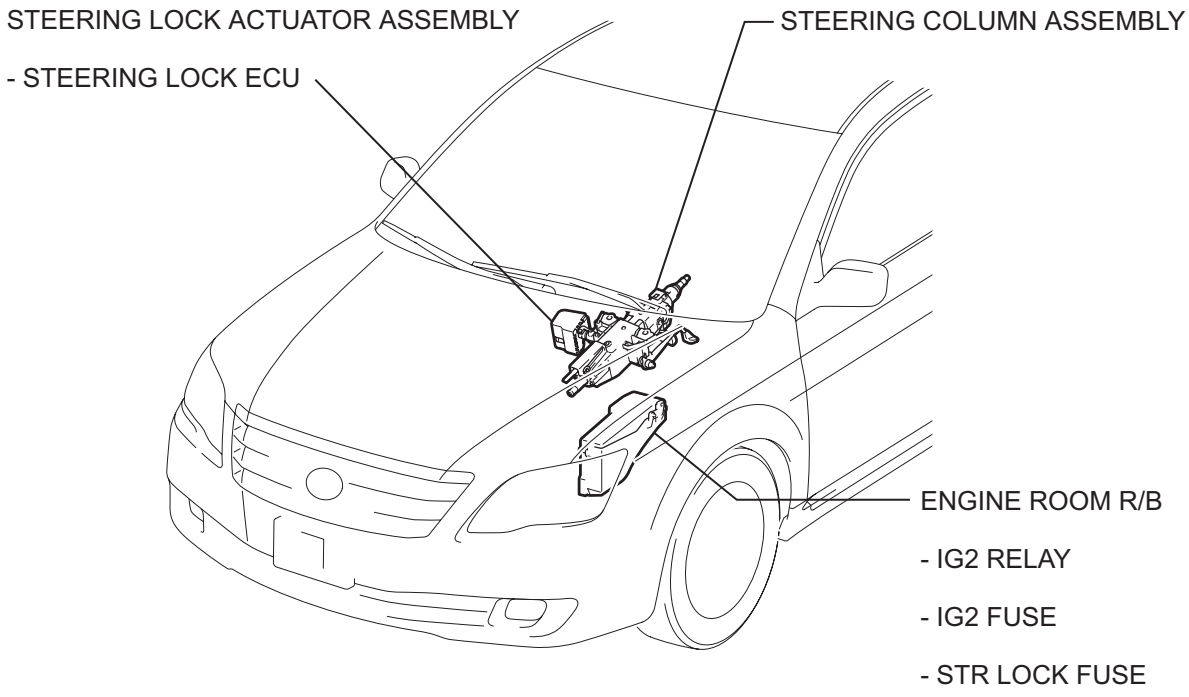

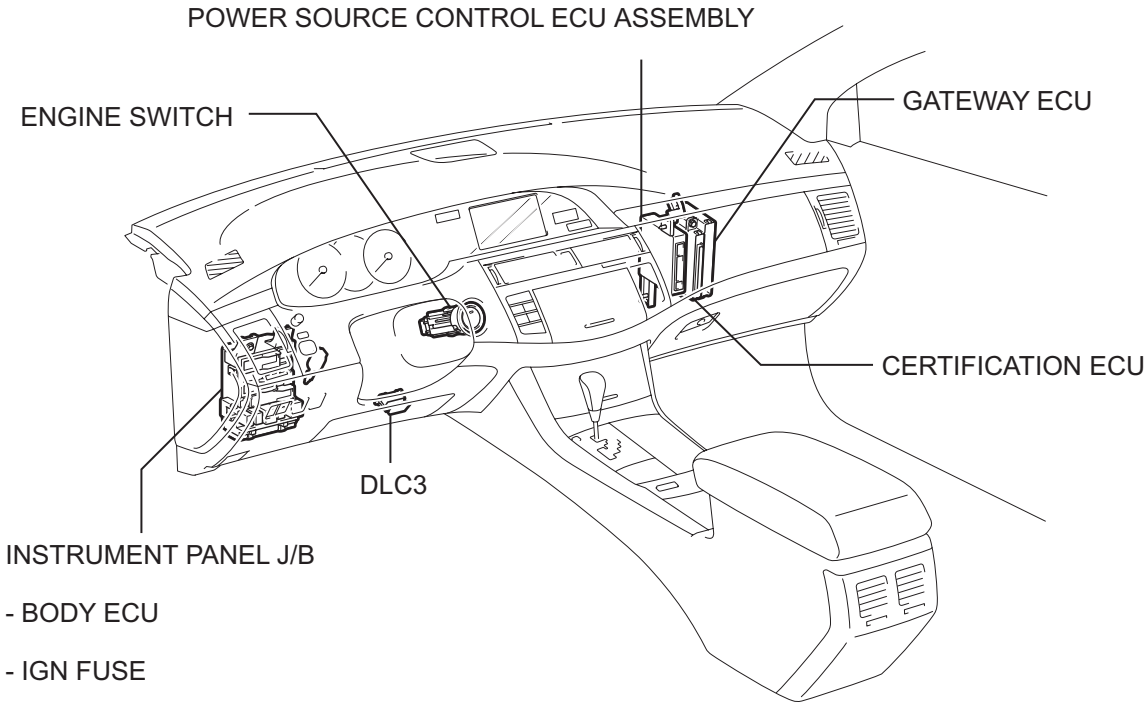

SR

P

C114900E01

SYSTEM DIAGRAM

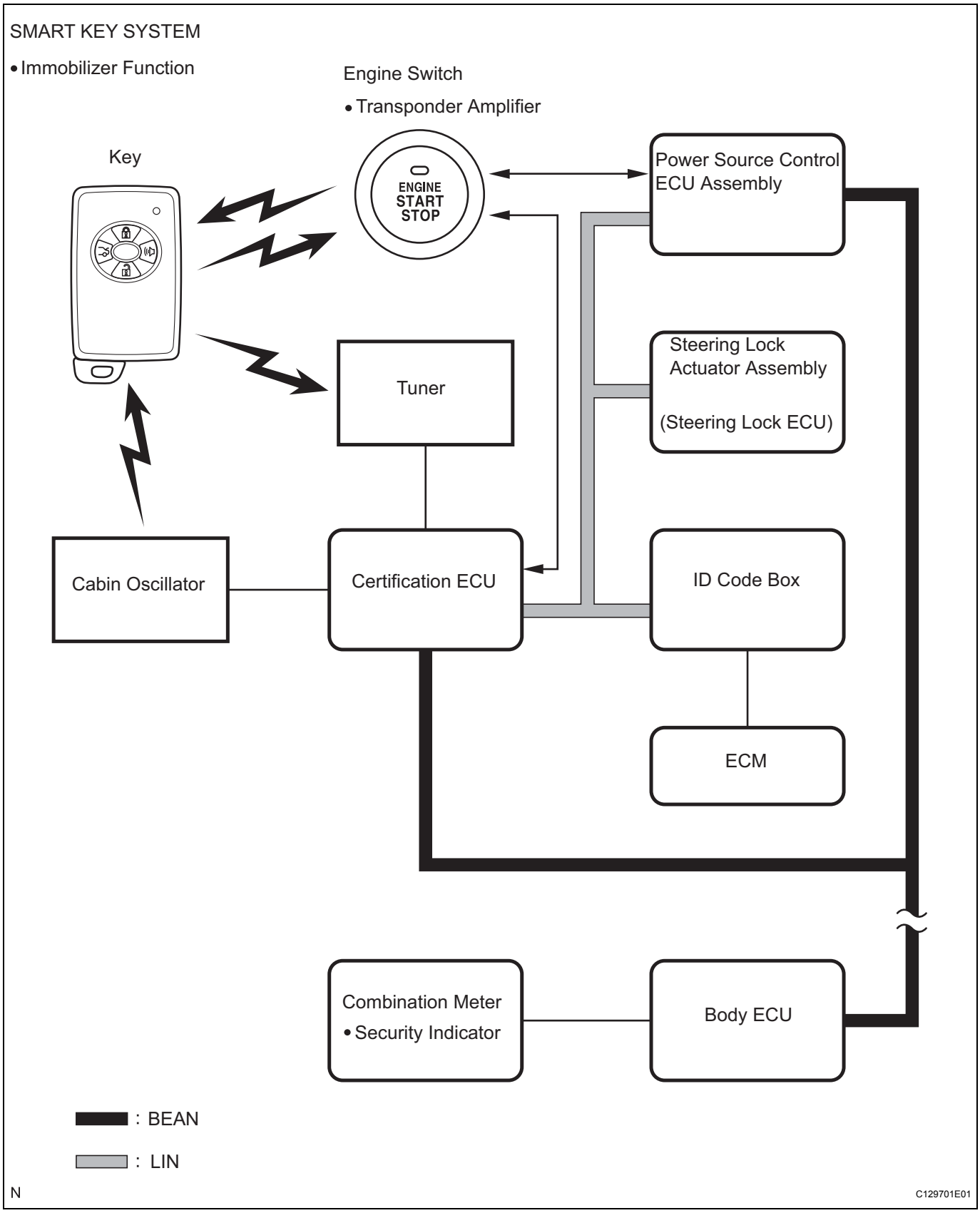

Input and output signals of each ECU

Transmitting ECU (transmitter)	Receiving ECU	Signals	Communication method
Power Source Control ECU assembly	Steering Lock ECU	Power supply status (to steering lock motor)	LIN
Steering Lock ECU	• Certification ECU • Power source control ECU assembly • ID code box	Sleep available status	LIN
Steering Lock ECU	• Certification ECU • Power source control ECU assembly • ID code box	Lock/Unlock sensor status	LIN
Steering Lock ECU	• Certification ECU • Power source control ECU assembly • ID code box	steering lock status	LIN
Steering Lock ECU	• Certification ECU • Power source control ECU assembly • ID code box	Motor control status	LIN
Steering Lock ECU	• Certification ECU • Power source control ECU assembly • ID code box	Diagnostic response status	LIN
Steering Lock ECU	• Certification ECU • Power source control ECU assembly • ID code box	Lock/Unlock sensor malfunction	LIN
Steering Lock ECU	• Certification ECU • Power source control ECU assembly • ID code box	Power supply malfunction (to steering lock motor)	LIN
Steering Lock ECU	• Certification ECU • Power source control ECU assembly • ID code box	Motor driver malfunction	LIN
Steering Lock ECU	• Certification ECU • Power source control ECU assembly • ID code box	Lock bar (stuck) status	LIN
Steering Lock ECU	• Certification ECU • Power source control ECU assembly • ID code box	Push start status	LIN
Steering Lock ECU	• Certification ECU • Power source control ECU assembly • ID code box	Lock/Unlock relay drive status	LIN
Steering Lock ECU	• Certification ECU • Power source control ECU assembly • ID code box	Engine start control status	LIN

SYSTEM DESCRIPTION

1. DESCRIPTION

(a) The steering lock system locks/unlocks the steering lock by activating the steering lock bar with a motor. The steering lock ECU activates the motor based on signals from the certification ECU and power source control ECU assembly.

2. FUNCTIONS OF COMPONENTS

(a) The steering lock ECU controls the system based on information from the following components.

Item	Function
Steering lock actuator assembly	Consists of a motor, lock, bar, lock/unlock position sensors, etc. Activated by the steering lock ECU.
Steering lock ECU	Included in the steering lock actuator assembly. Activates the steering lock motor based on permission signals from the power source control ECU and certification ECU. Detects steering lock/unlock positions and transmits the status to other ECUs.
Power source control ECU assembly	Permits the steering lock ECU to supply power to activate the motor. The power source control ECU and certification ECU permit engine start after receiving an unlock signal from the steering lock ECU.
Certification ECU assembly	Orders the steering lock ECU to lock/unlock the steering lock. The power source control ECU and certification ECU permit engine start after receiving an unlock signal from the steering lock ECU.
IG2 relay	Controlled by the power source control ECU. Sends IG signals to the steering lock ECU.

HOW TO PROCEED WITH TROUBLESHOOTING

The intelligent tester can be used during steps 3, 7, 10 and 13.

1	VEHICLE BROUGHT TO WORKSHOP

NEXT

2	CUSTOMER PROBLEM ANALYSIS

NEXT

3	CHECK AND CLEAR DTCs

NEXT

4	PROBLEM SYMPTOM CONFIRMATION

- SYMPTOM DOES NOT OCCUR (Go to step 5)
- SYMPTOM OCCURS (Go to step 6)

5	SYMPTOM SIMULATION

NEXT

6	CHECK MULTIPLEX COMMUNICATION SYSTEM

HINT:
Check that there are no problems in the multiplex communication system before troubleshooting the steering lock system.

NEXT

7	DTC CHECK

- DTCÅ@IS NOT OUTPUT (Go to step 8)
- DTC IS OUTPUT (Go to step 9)

8	PROBLEM SYMPTOMS TABLE

Go to step 10

9	DTC CHART

NEXT

10	CIRCUIT INSPECTION

NEXT

11	PROBLEM IDENTIFICATION

NEXT

12	REPAIR OR REPLACEMENT

NEXT

13	CONFIRMATION TEST

NEXT

END

PROBLEM SYMPTOMS TABLE

STEERING LOCK FUNCTION

Inspect the suspected areas in numerical order by referring to the corresponding pages when any of the following symptoms occurs.

Symptom	Suspected area	See page
Steering wheel cannnot be unlocked (the engine cannot be started).	1. Check for DTCs in the push button start.	ST-22
	2. Check for DTCs in the smart key system.	DL-170
	3. Check that the "LCK/UNLCK REC" item in the DATA LIST of the certification ECU displays YES within 10 seconds after starting the engine. (If it displays NO, see "No steering unlock command" in this table.)	SR-14
	4, Check the output from the IGE terminal of the steering lock ECU.	SR-11
	5. Steering lock ECU power source circuit	SR-29
	6. Replace the steering lock ECU.	SR-11
Steering wheel cannot be unlocked (no steering unlock command).	1. Check that the "S CODE MACH" item in the DATA LIST of the certification ECU displays OK. (If it displays NG, replace the certification ECU or ID code box.)	SR-14
	2. Check that the "L CODE MACH" item in the DATA LIST of the certification ECU displays OK. (If it displays NG, replace the steering lock ECU or ID code box.)	SR-14
	3. Replace the certification ECU.	-
Steering wheel cannot be locked.	1. Check for DTCs in the push button start.	ST-22
	2. Check for DTCs in the smart key system.	DL-170
	3. With the engine switch OFF and the shift in the P position, open and close the drivers door. After that, check that the "LCK/UNLCK REC" item in the DATA LIST of the certification ECU displays YES within 10 seconds. (If it displays NO, see "No steering lock command" in this table.)	SR-14
	4. Check the output from the IGE terminal of the steering lock ECU.	SR-11
	5. Steering lock ECU power source circuit	SR-29
	6. Replace the steering lock ECU.	-
Steering wheel cannot be locked (no steering lock command).	1. Courtesy light switch circuit	LI-65
	2. Check that the "S CODE MACH" item in the DATA LIST of the certification ECU displays OK. (If it displays NG, replace the certification ECU or ID code box.)	SR-14
	3. Check that the "L CODE MACH" item in the DATA LIST of the certification ECU displays OK. (If it displays NG, replace the steering lock ECU or ID code box.)	SR-14
	4. Replace the certification ECU.	-

PUSH BUTTON START FUNCTION

Symptom	Suspected area	See page
Engine does not start.	1. Check for DTCs in the push button start.	ST-22
	2. Check for DTCs in the smart key system.	DL-170
	3. Check that the engine switch is turned on.	-
	4. Check cranking operation. (If cranking operation is possible, see "Engine does not start due to the engine immobilizer" in this table.)	-
	5. Check "SHIFT P SIG" in the DATA LIST of the power source control ECU and confirm that the shift signal is normal.	ST-22
	6. Check whether the steering wheel is locked or unlocked. (If it is locked, see "Steering wheel cannot be unlocked" in the steering lock function table.)	-
	7. Check the output from the SLP terminal of the steering lock ECU.	SR-14
	8. Check the output signal from the ST SW of the certification ECU (DTC B2275).	ST-38
	9. Replace the power source control ECU.	-
Engine does not start due to the engine immobilizer.	1. Check that the "L CODE MACH" item in the DATA LIST of the certification ECU displays OK. (If it displays NG, replace the steering lock ECU or ID code box.)	ST-22
	2. Check that the "ENG START REQ" item in the DATA LIST of the certification ECU displays YES. (If it displays NO, replace the certification ECU.)	ST-22
	3. Check that the "S CODE MACH" item in the DATA LIST of the certification ECU displays OK. (If it displays NG, replace the certification ECU or ID code box.)	ST-22
	4. Replace the ID code box.	-

TERMINALS OF ECU

1. STEERING LOCK ACTUATOR ASSEMBLY (STEERING LOCK ECU)

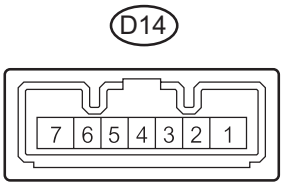

H

A128032E01

Terminal No. (Symbols)	Wiring color	Terminal description	Condition	Specified condition
D14-1 (GND) - Body ground	W-B - Body ground	Ground	Always	Below 1 V
D14-2 (SGND) - Body ground	W-B - Body ground	Signal ground	Always	Below 1 V
D14-3 (IGE) - D14-1 (GND)	BR - W-B	Power source for motor drive	• Motor is in operation • Motor is not in operation	• Below 1 V • 10 to 12 V
D14-4 (SLP1) - D14-2 (SGND)	GR - W-B	Unlock position sensor output signal	• When steering is locked • When steering lock is released	• 10 to 14 V • Below 1 V
D14-5 (LIN) - D14-2 (SGND)	R - W-B	LIN communication bus	Engine switch on (IG)	Pulse generation
D14-6 (IG2) - D14-1 (GND)	V - W-B	IG signal input	Engine switch on (IG)	10 to 14 V
D14-7 (B) - D14-1 (GND)	B - W-B	Power source	Always	10 to 14 V

DIAGNOSIS SYSTEM

1. DESCRIPTION

(a) DIAGNOSTIC SYSTEM
When troubleshooting a vehicle with a diagnostic system, the only difference from the usual troubleshooting procedure is connecting the intelligent tester to the vehicle and reading various data output from the vehicle's steering lock ECU. The steering lock ECU records DTCs when the computer detects a malfunction in the computer itself or in its circuits.
To check the DTCs, connect the intelligent tester to the DLC3 on the vehicle. The intelligent tester enables clearing the DTCs, activating indicators and checking the data list.

(b) The diagnosis information of the steering lock ECU is transmitted to the tester via the certification ECU as the steering lock ECU is not connected to the BEAN.

(c) Check the DLC3.
The certification ECU follows the ISO 9141-2 communication protocol. The terminal arrangement of the DLC3 complies with SAE J1962 and matches the ISO 9141-2 format.

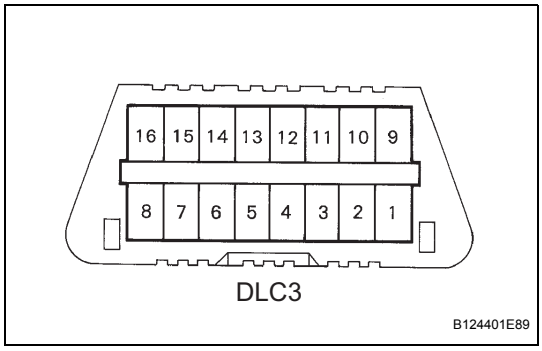

Symbols (Terminals No.)	Terminal Description	Condition	Specified Condition
SIL(7) - SG(5)	Bus "+" line	During communication	Pulse generation
CG(4) - Body ground	Chassis ground	Always	Below 1 Ω
SG(5) - Body ground	Signal ground	Always	Below 1 Ω
BAT(16) - Body ground	Battery positive	Always	11 to 14 V

HINT:
- If the display shows a communication error message after connecting the intelligent tester cable to the DLC3 and turning the engine switch on (IG), there is a problem with either the vehicle or tester.
- If communication is normal when connecting the tester to another vehicle, inspect the DLC3 on the original vehicle.
- If communication is still not possible when connecting the tester to another vehicle, the problem is probably on the tester itself, so consult the Service Department listed in the tester's operator's manual.

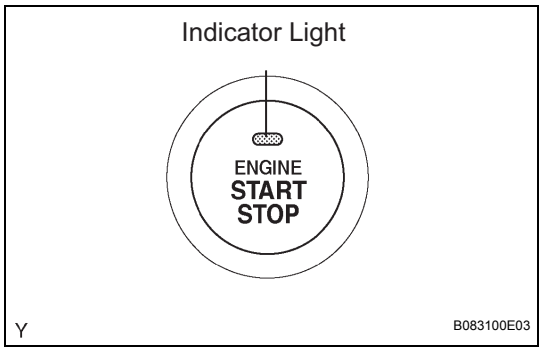

2. WARNING FUNCTION OF ENGINE SWITCH INDICATOR

(a) The steering lock ECU blinks the LED indicator of the engine switch when any of the following problems occurs in the system.

Detection item	Indicator light blink pattern	Indication status	Countermeasure
Steering lock is still not released	• Blinks green at 1-second intervals • Goes off 15 seconds after blinking starts	The motor operates to release the steering lock, but the steering lock cannot be released (e.g. the lock bar is stuck in the steering column).	Push the engine switch while turning the steering wheel left and right.
Malfunction in push button start function	• Blinks amber at 2-second intervals • Goes off 15 seconds after the engine switch is turned off while blinking	• There is a short in the devices activating the motor. • There is a problem in the steering lock ECU or power source control ECU assembly.	Troubleshoot by following "HOW TO PROCEED WITH TROUBLESHOOTING" (See page ST-4).

3. WARNING FUNCTION OF COMBINATION METER

(a) The steering lock ECU displays a warning on the combination meter when any of the following problems occurs in the system.

Detection item	Display	Indication status	Countermeasure
Steering lock is still not released	"S/T is not Unlocked" Goes off 15 seconds after blinking starts	The motor operates to release the steering lock, but the steering lock cannot be released (e.g. the lock bar is stuck in the steering column).	Push the engine switch while turning the steering wheel left and right.
Malfunction in push button start function	"Check S/T Lock" Goes off 15 seconds after the engine switch is turned off while blinking	• There is a short in the devices activating the motor. • There is a problem in the steering lock ECU or power source control ECU assembly.	Troubleshoot by following "HOW TO PROCEED WITH TROUBLESHOOTING" (See page ST-4).

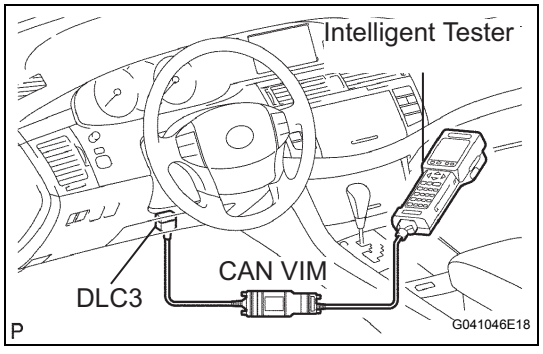

DTC CHECK / CLEAR

1. CHECK FOR DTCs

(a) Prepare the intelligent tester.

(b) Connect the intelligent tester to the DLC3 at the lower part of the instrument panel.

(c) Turn the engine switch on (IG) and turn the intelligent tester on.

(d) Use the intelligent tester to check for DTCs, and note or print the result (see the operator's manual for operating instructions).

(e) Refer to DIAGNOSTIC TROUBLE CODE CHART to confirm the details of the DTCs (See page SR-15).

2. CLEAR DTCs

(a) Operate the intelligent tester to clear the DTCs (see the operator's manual for operating instructions).

SR

DATA LIST / ACTIVE TEST

1. DATA LIST

HINT:

By accessing the DATA LIST displayed on the intelligent tester, you can perform such functions as reading the values of switches and sensors without removing any parts. Reading the DATA LIST is the first step of troubleshooting and is one method to shorten labor time.

(a) Connect the intelligent tester to the DLC3.
(b) Turn the engine switch on (IG) and turn the intelligent tester on.
(c) Operate the intelligent tester according to the steps on the display and select "DATA LIST".

Certification ECU:

Item	Measurement Item/Range (Display)	Normal Condition	Diagnostic Note
SENSOR VALUE	Sensor malfunction/NG (PAST) or OK	NG (PAST): Sensor malfunction OK: No malfunction	-
PWR SUPPLY SHORT	Short in ECU/NG (PAST) or OK	NG (PAST): Short in ECU OK: No malfunction	-
PWR SUPPLY OPEN	Open in ECU/NG (PAST) or OK	NG (PAST): Open in ECU OK: No malfunction	-
MTR DRIVER SHRT	Short in driver ECU/NG (PAST) or OK	NG (PAST): Short in driver ECU OK: No malfunction	-
MTR DRIVER OPEN	Open in driver ECU/NG (PAST) or OK	NG (PAST): Open in driver ECU OK: No malfunction	-
LCK/UNLCK REC	Steering lock command reception record/YES or NO	YES: Steering lock/unlock signal received NO: Steering lock/unlock signal not received	-
LCK BAR STUCK	Lock bar stuck malfunction/NG (PAST) or OK	NG (PAST): Lock bar stuck malfunction OK: No malfunction	-
PUSH START ERR	Push button start function malfunction/NG (PAST) or OK	NG (PAST): Malfunction in push button start OK: No malfunction	-
IG2 (LINER)	IG2 status/ON or OFF	ON: 10 to 14 V OFF: Below 1 V	-
IG (LIN)	LIN bus start-up status/ON or OFF	ON: LIN bus started-up OFF: LIN bus not started-up	-

2. ACTIVE TEST

HINT:

Performing the ACTIVE TEST in one of the methods to shorten labor time. It is possible to display the DATA LIST during the ACTIVE TEST.

(a) Connect the intelligent tester to the DLC3.
(b) Turn the engine switch on (IG) and turn the intelligent tester on.
(c) Following the display on the intelligent tester, perform the "ACTIVE TEST".

SR

Certification ECU:

Item	Test Details	Diagnostic Note
SECURITY INDIC	Security Indicator/ON or OFF	-

DIAGNOSTIC TROUBLE CODE CHART

If a trouble code is displayed during the DTC check, check the parts listed for that code in the table below and proceed to the appropriate page.

HINT:

The steering lock ECU does not store DTCs regarding the past problems.

DTC No.	Detection Item	Trouble Area	See page
B2781	Open / Short in Steering Lock ECU	Steering lock actuator assembly (Steering lock ECU)	SR-16
B2782	Power ECU Malfunction	1. Wire harness 2. Steering lock actuator assembly (Steering lock ECU) 3. Power source control ECU assembly	SR-17
B2788	IG2 Signal Malfunction	1. IG2 relay 2. Wire harness 3. Power source control ECU assembly 4. Steering lock actuator assembly (Steering lock ECU)	SR-20

DTC	B2781	Open / Short in Steering Lock ECU

DESCRIPTION

If the steering lock ECU determines that there is a malfunction inside the ECU, it outputs this DTC. Diagnostic communication between the steering lock ECU and the intelligent is performed via the certification ECU as the steering lock ECU is not connected to the BEAN.

DTC No.	DTC Detecting Condition	Trouble Area
B2781	• Steering lock motor drive circuit is defective. • Both lock and unlock position sensors detect "ON".	Steering lock actuator assembly (Steering lock ECU)

INSPECTION PROCEDURE

1	REPLACE STEERING LOCK ACTUATOR ASSEMBLY

HINT:
The steering lock ECU and steering lock actuator assembly supplied as a unit.

(a) Replace the steering lock actuator assembly (See page SR-41).

NEXT

RECONFIRM DTC

DTC	B2782	Power Source Control ECU Malfunction

DESCRIPTION

The power source control ECU controls the power supply to activate the steering lock motor. This prevents the steering from being locked while the vehicle is moving.

DTC No.	DTC Detecting Condition	Trouble Area
B2782	Steering lock motor drive control circuit is defective.	• Wire harness • Steering lock actuator assembly (Steering lock ECU) • Power source control ECU assembly

WIRING DIAGRAM

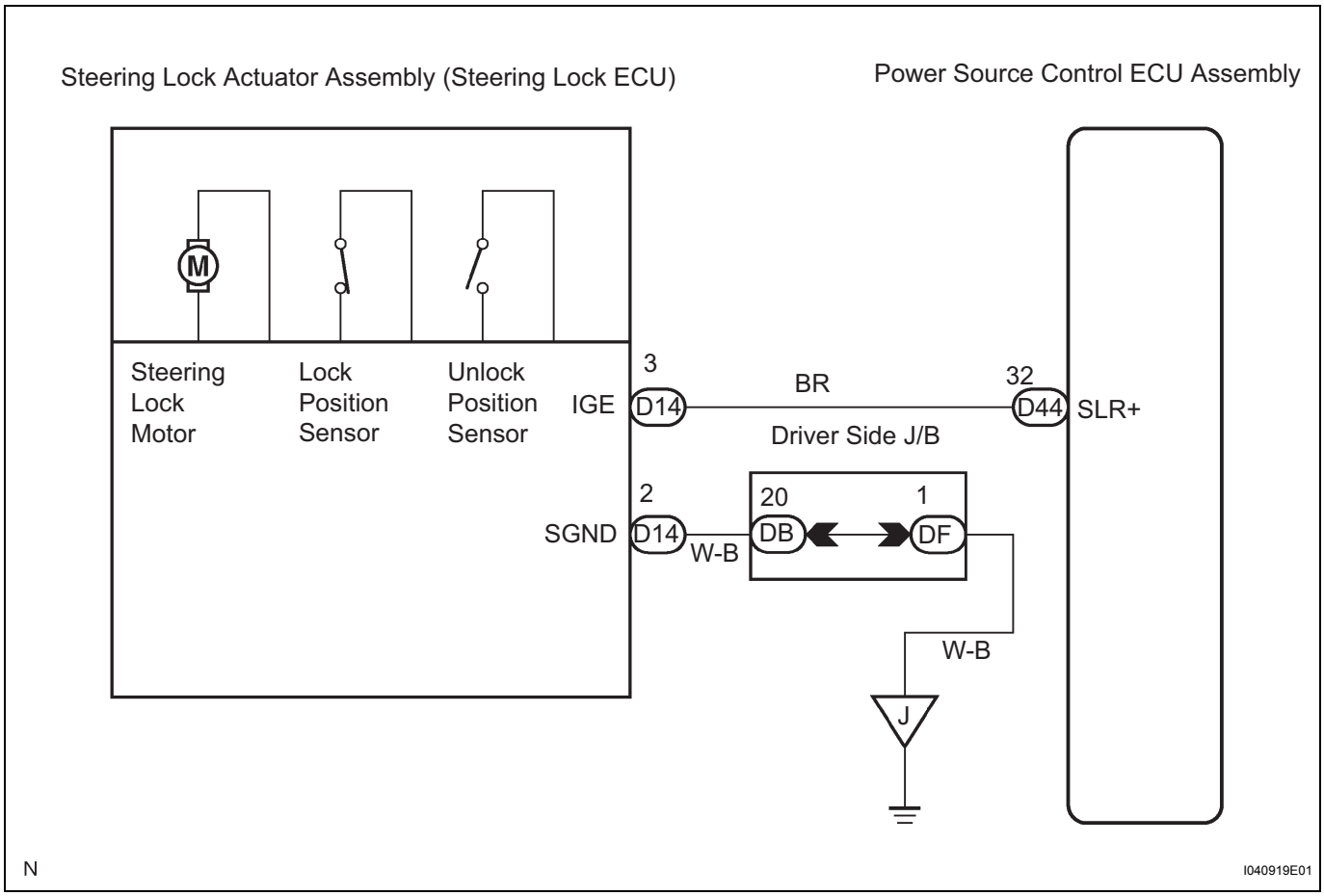

SR

INSPECTION PROCEDURE

1 INSPECT STEERING LOCK ACTUATOR ASSEMBLY

Steering Lock Actuator Assembly:

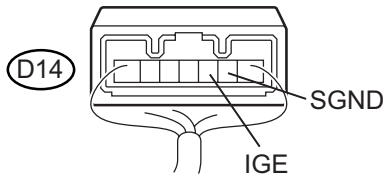

H C129702E01

(a) Measure the voltage according to the value(s) in the table below.

Voltage

Tester connection (Symbols)	Condition	Specified condition
D14-3 (IGE) - D14-2 (SGND)	1. Engine switch off 2. Turn the engine switch on (ACC or IG)	• Motor active: Below 1 V • Motor not active: 10 to 12 V
D14-3 (IGE) - D14-2 (SGND)	1. Adjust the shift lever to the P position 2. Turn the engine switch off 3. Open the driver's door	• Motor active: Below 1 V • Motor not active: 10 to 12 V

HINT:
The steering lock ECU and steering lock actuator assembly are supplied as a unit.

OK → **REPLACE STEERING LOCK ACTUATOR ASSEMBLY**

NG

2 CHECK HARNESS AND CONNECTOR (STEERING LOCK ACTUATOR ASSEMBLY - BODY GROUND))

Steering Lock Actuator Assembly:

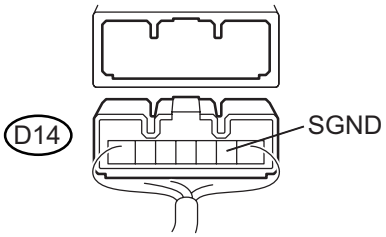

H A128054E01

(a) Disconnect the D14 connector from the steering lock actuator assembly.
(b) Measure the resistance according to the value(s) in the table below.

Resistance

Tester connection (Symbols)	Condition	Specified condition
D14-2 (SGND) - Body ground	Always	Below 1 Ω

NG → **REPAIR OR REPLACE HARNESS OR CONNECTOR**

OK

SR

3	CHECK HARNESS AND CONNECTOR (STEERING LOCK ACTUATOR ASSEMBLY - POWER SOURCE CONTROL ECU)

Steering Lock Actuator Assembly:

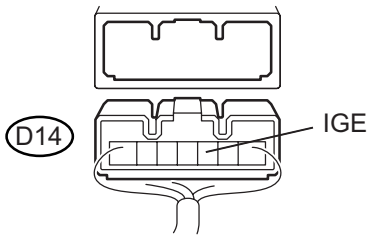

H A128054E03

Power Source Control ECU Assembly:

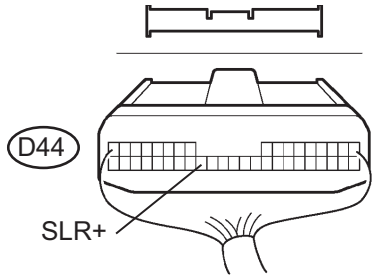

N I040913E02

(a) Disconnect the D44 connector from the power source control ECU assembly.

(b) Measure the resistance according to the value(s) in the table below.

Voltage

Tester connection (Symbols)	Condition	Specified condition
D14-3 (IGE) - D44-32 (SLR+)	Always	Below 1 Ω
D14-3 (IGE) - Body ground	Always	10 kΩ or higher

NG → **REPAIR OR REPLACE HARNESS OR CONNECTOR**

OK

DTC	B2788	IG2 Signal Malfunction

DESCRIPTION

The steering lock ECU receives IG2 relay signals. Receiving the signals, the steering lock ECU determines that the vehicle is moving. The steering lock ECU does not lock the steering when it receives an IG2 relay ON signal (to prevent the steering from being locked while the vehicle is moving).

DTC No.	DTC Detecting Condition	Trouble Area
B2788	Different information is obtained from IG2 signals received directly from the IG2 circuit, and from IG2 signals sent via LIN communication for a period of 1 second.	• IG2 relay • Wire harness • Power source control ECU assembly • Steering lock actuator assembly (Steering lock ECU)

WIRING DIAGRAM

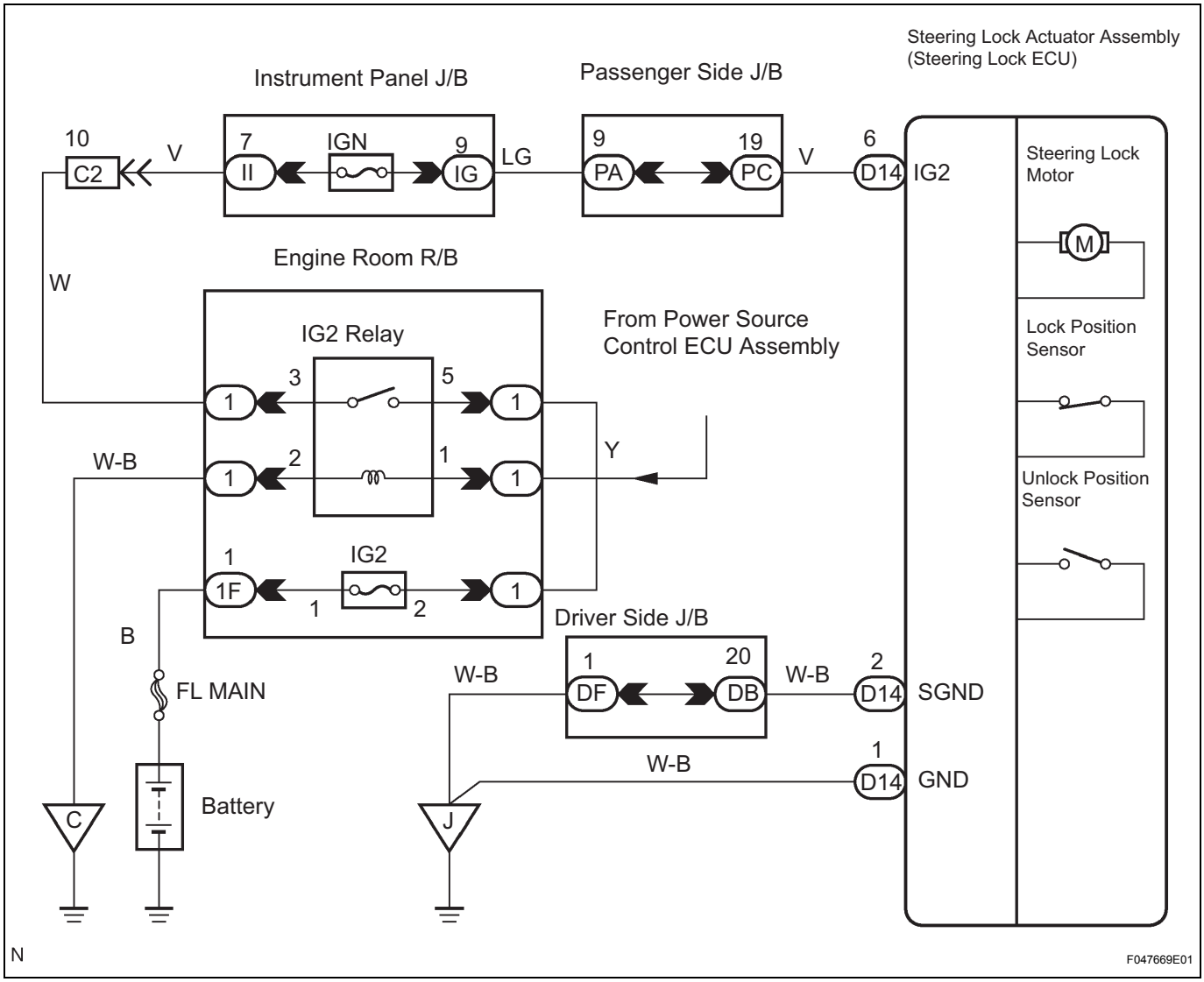

SR

N

F047669E01

INSPECTION PROCEDURE

1 INSPECT IG2 RELAY

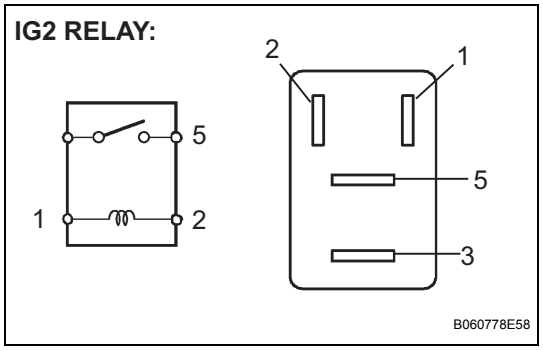

(a) Remove the IG2 relay from the engine room R/B.
(b) Measure the resistance according to the value(s) in the table below.

Resistance

Tester connection	Specified condition
3 - 5	10 kΩ or higher
3 - 5	Below 1 Ω (when battery voltage is applied to terminals 1 and 2)

NG → **REPLACE IG2 RELAY**

OK

2 CHECK HARNESS AND CONNECTOR (STEERING LOCK ACTUATOR ASSEMBLY - BODY GROUND)

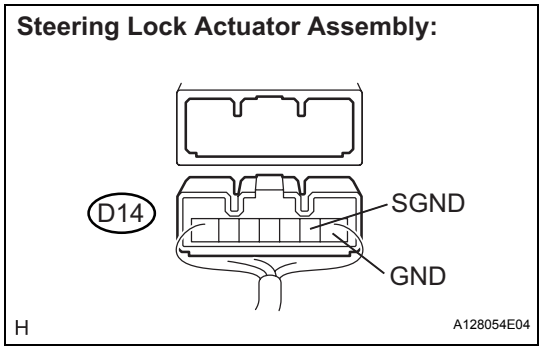

(a) Disconnect the D14 connector from the steering lock actuator assembly.
(b) Measure the resistance according to the value(s) in the table below.

Resistance

Tester connection (Symbols)	Condition	Specified condition
D14-1 (GND) - Body ground	Always	Below 1 Ω
D14-2 (SGND) - Body ground	Always	Below 1 Ω

NG → **REPAIR OR REPLACE HARNESS OR CONNECTOR**

OK

3 CHECK HARNESS AND CONNECTOR (STEERING LOCK ACTUATOR ASSEMBLY - BATTERY)

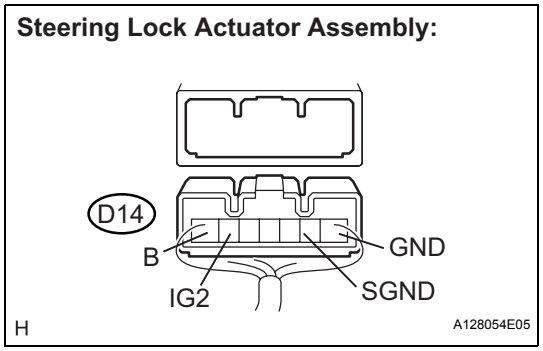

(a) Measure the voltage according to the value(s) in the table below.

Voltage

Tester connection (Symbols)	Condition	Specified condition
D14-6 (IG2) - D14-1 (GND)	Engine switch on (IG)	10 to 14 V
D14-6 (IG2) - D14-2 (SGND)	Engine switch on (IG)	10 to 14 V

(b) Measure the resistance according to the value(s) in the table below.

SR

Resistance

Tester connection (Symbols)	Condition	Specified condition
*D14-6 (IG2) - D14-7 (B)	Engine switch off	10 kΩ or higher

*: This measurement is performed with the engine switch off to check for a battery voltage short in the IG2 circuit.

OK → **REPLACE STEERING LOCK ACTUATOR ASSEMBLY**

NG

REPAIR OR REPLACE HARNESS OR CONNECTOR (STEERING LOCK ACTUATOR ASSEMBLY - BATTERY)

Steering Lock Motor Drive Power Circuit

DESCRIPTION

The steering lock ECU is connected to the power source control ECU assembly and certification ECU. The steering lock ECU cannot activate the motor unless it obtains permission from both the ECUs. (The power source control ECU assembly permits the steering lock ECU to supply power to activate the motor.)

WIRING DIAGRAM

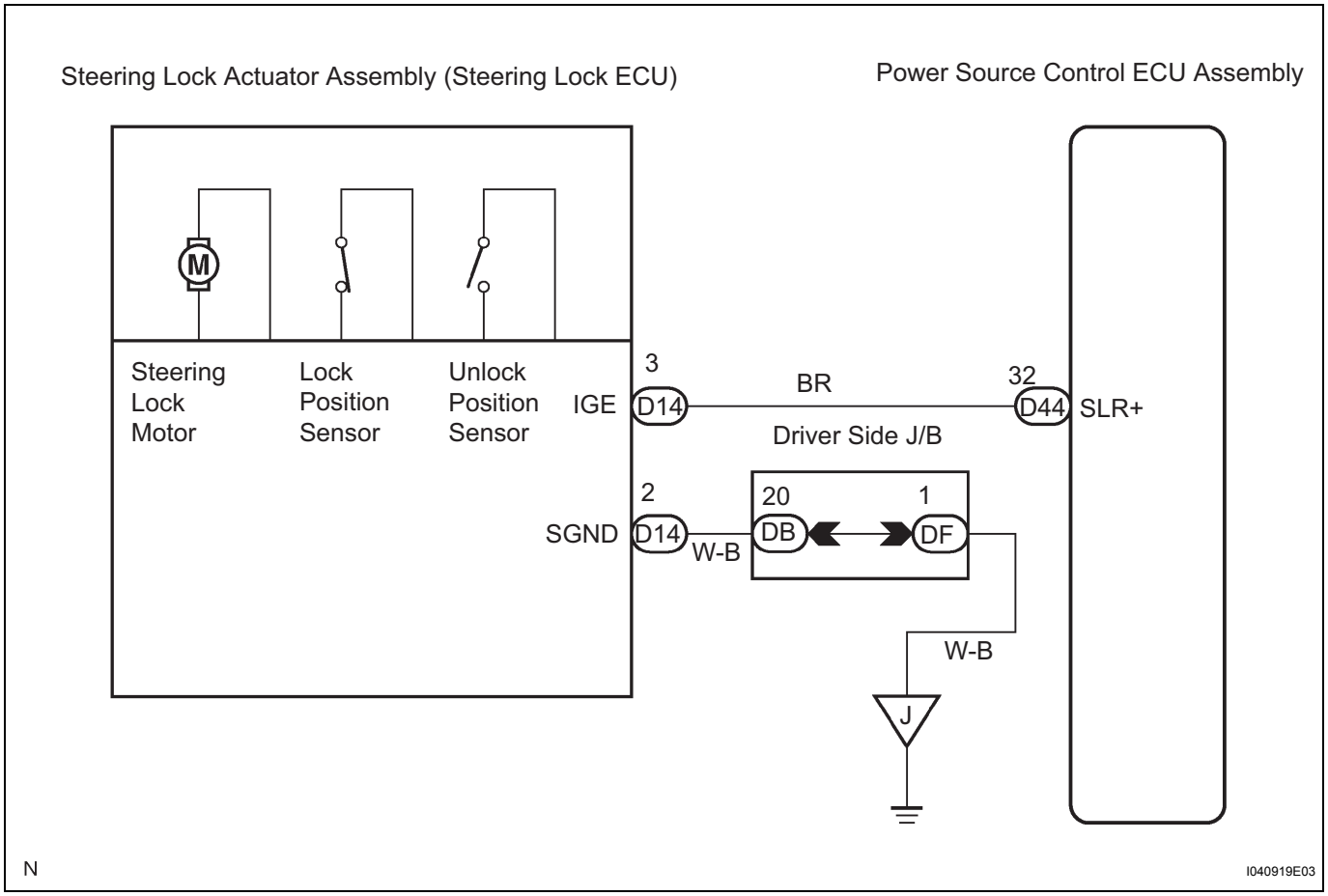

INSPECTION PROCEDURE

1	CHECK CONDITION

(a) Check the problem symptom of the steering lock system.

Result

Condition	Proceed to
Steering lock cannot be released	A
Steering cannot be locked	B

B → Go to step 6

A

SR

2	READ VALUE OF INTELLIGENT TESTER

(a) Connect the intelligent tester to the DLC3.
(b) Turn the engine switch on (IG), and turn the intelligent tester on.
(c) Select the item below in the Data List, and read its value displayed on the intelligent tester.

Certification ECU:

Item	Measurement Item / Range (Display)	Normal Condition
LCK / UNLCK REC	Steering lock command reception record / YES or NO	YES: Steering lock / unlock signal received NO: Steering lock / unlock signal no received

(d) Check if steering unlock command reception is confirmed.
OK:
"YES" is displayed on the tester display.

NG → **CHECK SMART KEY SYSTEM**

OK

3	INSPECT STEERING LOCK ACTUATOR ASSEMBLY

Steering Lock Actuator Assembly:

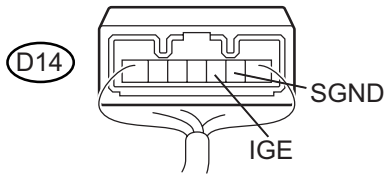

H C129702E02

(a) Measure the voltage according to the value(s) in the table below.
Voltage

Tester Connection (Symbols)	Condition	Specified Condition
D14-3 (IGE) - D14-2 (SGND)	1. Engine switch off 2. Turn the engine switch on (ACC or IG)	• Motor active: Below 1 V • Motor not active: 10 to 12 V

OK → **PROCEED TO NEXT CIRCUIT INSPECTION SHOWN IN PROBLEM SYMPTOMS TABLE**

NG

4	CHECK HARNESS AND CONNECTOR (STEERING LOCK ACTUATOR ASSEMBLY - BODY GROUND)

Steering Lock Actuator Assembly:

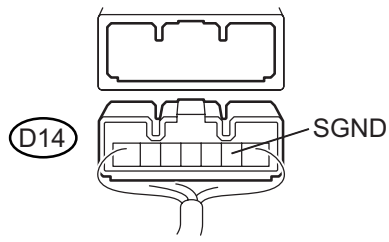

H A128054E08

(a) Disconnect the D14 connector from the steering lock actuator assembly.
(b) Measure the resistance according to the value(s) in the table below.
Resistance

Tester Connection (Symbols)	Condition	Specified Condition
D14-2 (SGND) - Body ground	Always	Below 1 Ω

NG → **REPAIR OR REPLACE HARNESS OR CONNECTOR**

SR

OK

5	CHECK HARNESS AND CONNECTOR (STEERING LOCK ACTUATOR ASSEMBLY - POWER SOURCE CONTROL ECU)

Steering Lock Actuator Assembly:

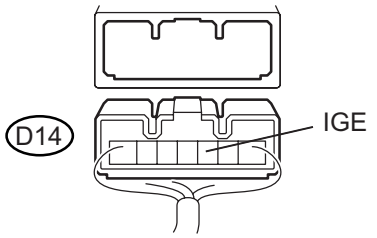

(a) Disconnect the D44 connector from the power source control ECU assembly.

Power Source Control ECU Assembly:

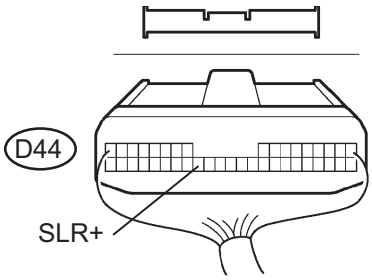

(b) Measure the resistance according to the value(s) in the table below.

Resistance

Tester Connection (Symbols)	Condition	Specified Condition
D14-3 (IGE) - D44-32 (SLR+)	Always	Below 1 Ω
D14-3 (IGE) - Body ground	Alway	10 kΩ or higher

NG → REPAIR OR REPLACE HARNESS OR CONNECTOR

OK

REPLACE POWER SOURCE CONTROL ECU ASSEMBLY

6	INSPECT STEERING LOCK ACTUATOR ASSEMBLY

Steering Lock Actuator Assembly:

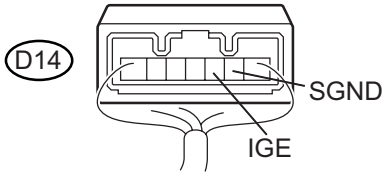

(a) Measure the voltage according to the value(s) in the table below.

Voltage

Tester Connection (Symbols)	Condition	Specified Condition
D14-3 (IGE) - D14-2 (SGND)	1. Adjust the shift lever to the P position 2. Turn the engine switch off 3. Open the driver side door	• Motor active: Below 1 V • Motor not active: 10 to 12 V

OK → PROCEED TO NEXT CIRCUIT INSPECTION SHOWN IN PROBLEM SYMPTOMS TABLE

NG

SR

7	CHECK HARNESS AND CONNECTOR (STEERING LOCK ACTUATOR ASSEMBLY - BODY GROUND)

Steering Lock Actuator Assembly:

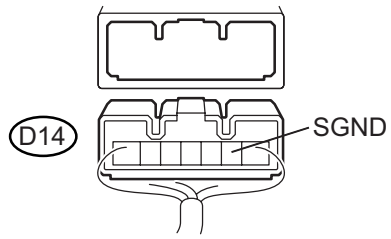

(a) Disconnect the D14 connector from the steering lock actuator assembly.
(b) Measure the resistance according to the value(s) in the table below.

Resistance

Tester Connection (Symbols)	Condition	Specified Condition
D14-2 (SGND) - Body ground	Always	Below 1 Ω

NG → **REPAIR OR REPLACE HARNESS OR CONNECTOR**

OK

8	CHECK HARNESS AND CONNECTOR (STEERING LOCK ACTUATOR ASSEMBLY - POWER SOURCE CONTROL ECU)

Steering Lock Actuator Assembly:

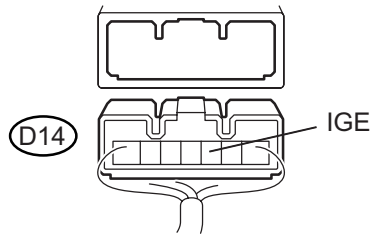

(a) Disconnect the D44 connector from the power source control ECU assembly.

Power Source Control ECU Assembly:

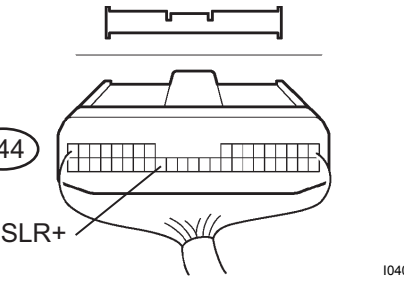

(b) Measure the resistance according to the value(s) in the table below.

Resistance

Tester Connection (Symbols)	Condition	Specified Condition
D14-3 (IGE) - D44-32 (SLR+)	Always	Below 1 Ω
D14-3 (IGE) - Body ground	Always	10 kΩ or higher

NG → **REPAIR OR REPLACE HARNESS OR CONNECTOR**

SR

OK

REPLACE POWER SOURCE CONTROL ECU ASSEMBLY

Unlock Position Sensor Signal Circuit

DESCRIPTION

The unlock position sensor is one of the components comprising the steering lock actuator. The sensor switch contact closes when the steering lock is released. The steering lock release signal is then sent to the power source control ECU assembly. Receiving the signal, the ECU permits engine start. (This prevents the engine from being started with the steering locked.)

WIRING DIAGRAM

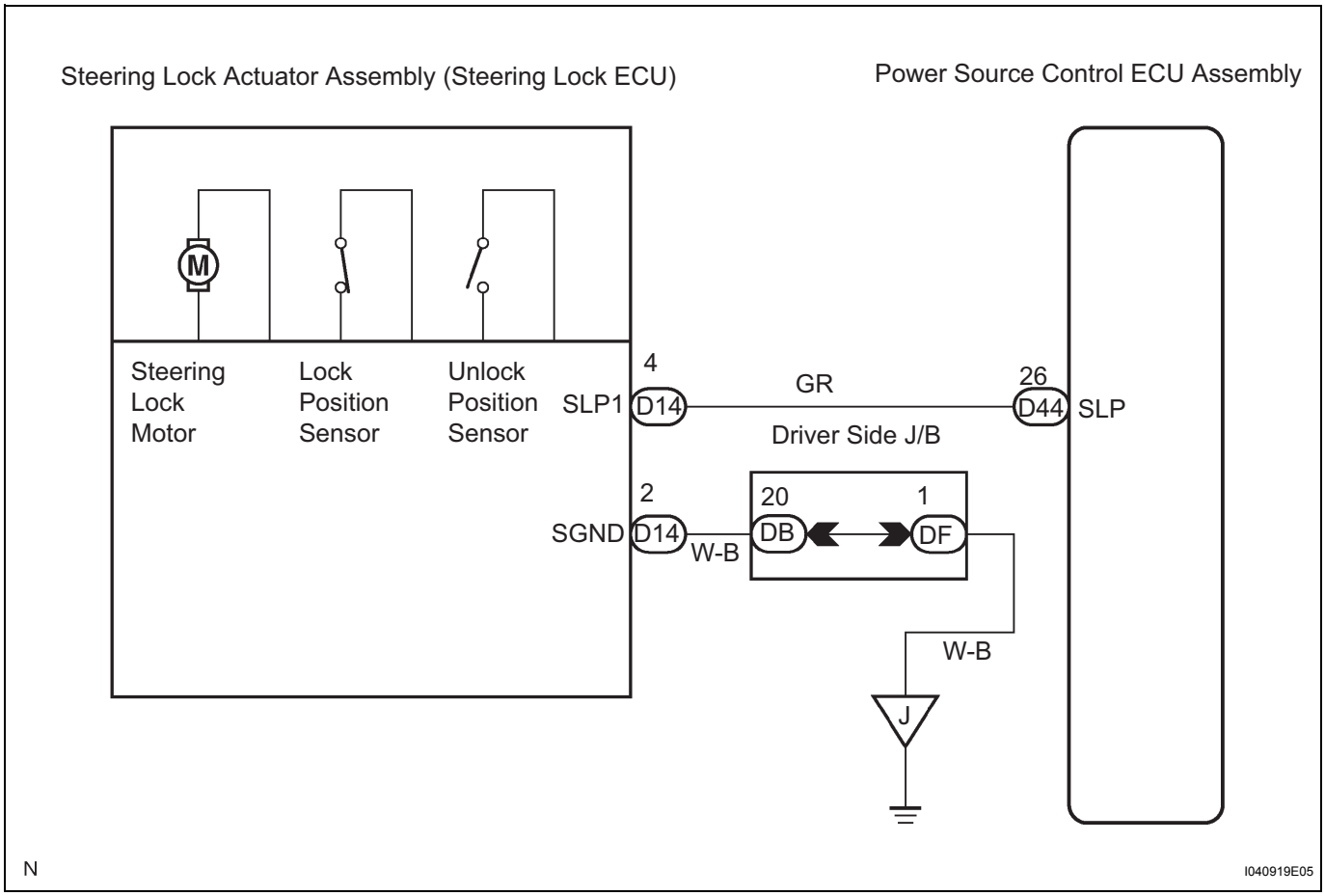

INSPECTION PROCEDURE

1	INSPECT STEERING LOCK ACTUATOR ASSEMBLY

Steering Lock Actuator Assembly:

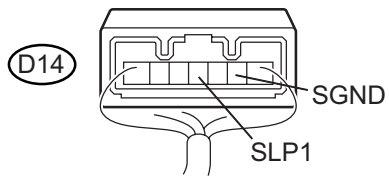

(a) Measure the voltage according to the value(s) in the table below.

Voltage

Tester Connection (Symbols)	Condition	Specified Condition
D14-4 (SLP1) - D14-2 (SGND)	1. Engine switch off 2. Turn the engine switch on (ACC or IG)	Below 1 V

OK	CHECK PUSH BUTTON START SYSTEM

SR

NG

2	CHECK HARNESS AND CONNECTOR (STEERING LOCK ACTUATOR ASSEMBLY - POWER SOURCE CONTROL ECU)

Steering Lock Actuator Assembly:

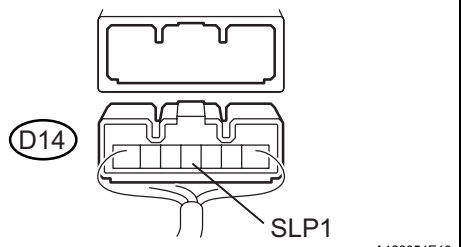

(a) Disconnect the D14 connector from the steering lock actuator assembly.

Power Source Control ECU Assembly:

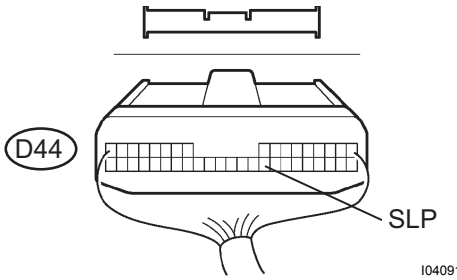

(b) Disconnect the D44 connector from the power source control ECU.

(c) Measure the resistance according to the value(s) in the table below.

Resistance

Tester Connection (Symbols)	Condition	Specified Condition
D14-4 (SLP1) - D44-26 (SLP)	Always	Below 1 Ω
D14-4 (SLP1) - Body ground	Always	10 kΩ or higher

NG → REPAIR OR REPLACE HARNESS OR CONNECTOR

OK

REPLACE STEERING LOCK ACTUATOR ASSEMBLY

Power Source Circuit

DESCRIPTION

This circuit supplies power source voltage from the battery to terminal B of the steering lock ECU. This is used as power source for the CPU, motor, communication, and peripheral circuits.

WIRING DIAGRAM

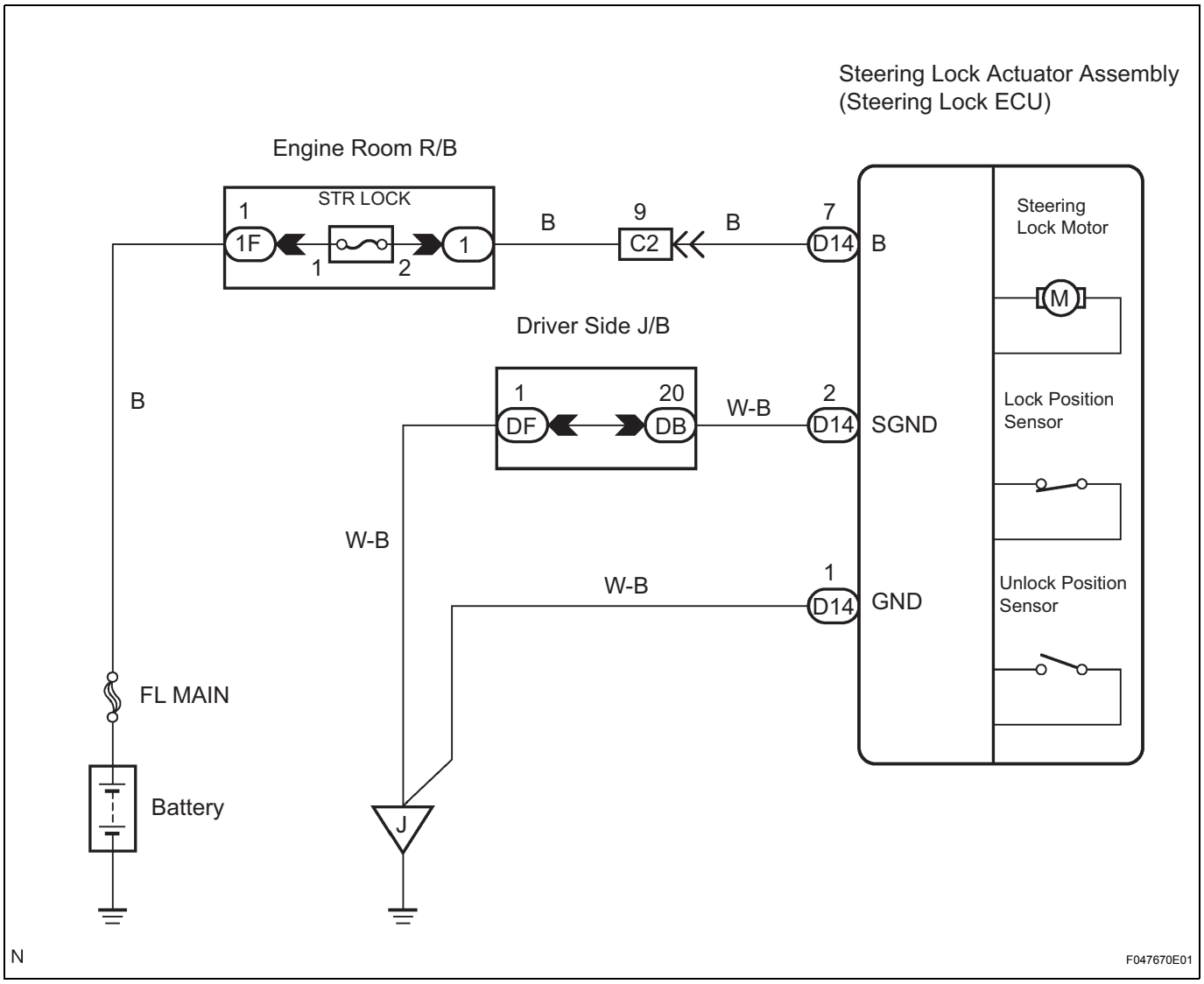

SR

INSPECTION PROCEDURE

1 CHECK HARNESS AND CONNECTOR (STEERING LOCK ACTUATOR ASSEMBLY - BODY GROUND)

Steering Lock Actuator Assembly:

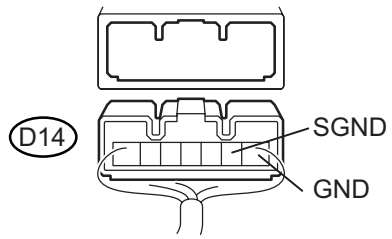

(a) Disconnect the D14 connector from the steering lock actuator assembly.

(b) Measure the resistance according to the value(s) in the table below.

Resistance

Tester connection (Symbols)	Condition	Specified condition
D14-1 (GND) - Body ground	Always	Below 1 Ω
D14-2 (SGND) - Body ground	Always	Below 1 Ω

NG → **REPAIR OR REPLACE HARNESS OR CONNECTOR**

OK

2 CHECK HARNESS AND CONNECTOR (STEERING LOCK ACTUATOR ASSEMBLY - BATTERY)

Steering Lock Actuator Assembly:

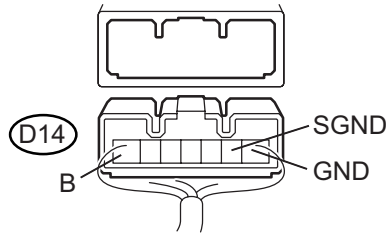

(a) Measure the voltage according to the value(s) in the table below.

Voltage

Tester connection (Symbols)	Condition	Specified condition
D14-7 (B) - D14-1 (GND)	Always	10 to 14 V
D14-7 (B) - D14-2 (SGND)	Always	10 to 14 V

OK → **PROCEED TO NEXT CIRCUIT INSPECTION SHOWN IN PROBLEM SYMPTOMS TABLE**

NG

REPAIR OR REPLACE HARNESS OR CONNECTOR (STEERING LOCK ACTUATOR ASSEMBLY - BATTERY)

STEERING COLUMN ASSEMBLY

COMPONENTS

WITHOUT SMART KEY SYSTEM:

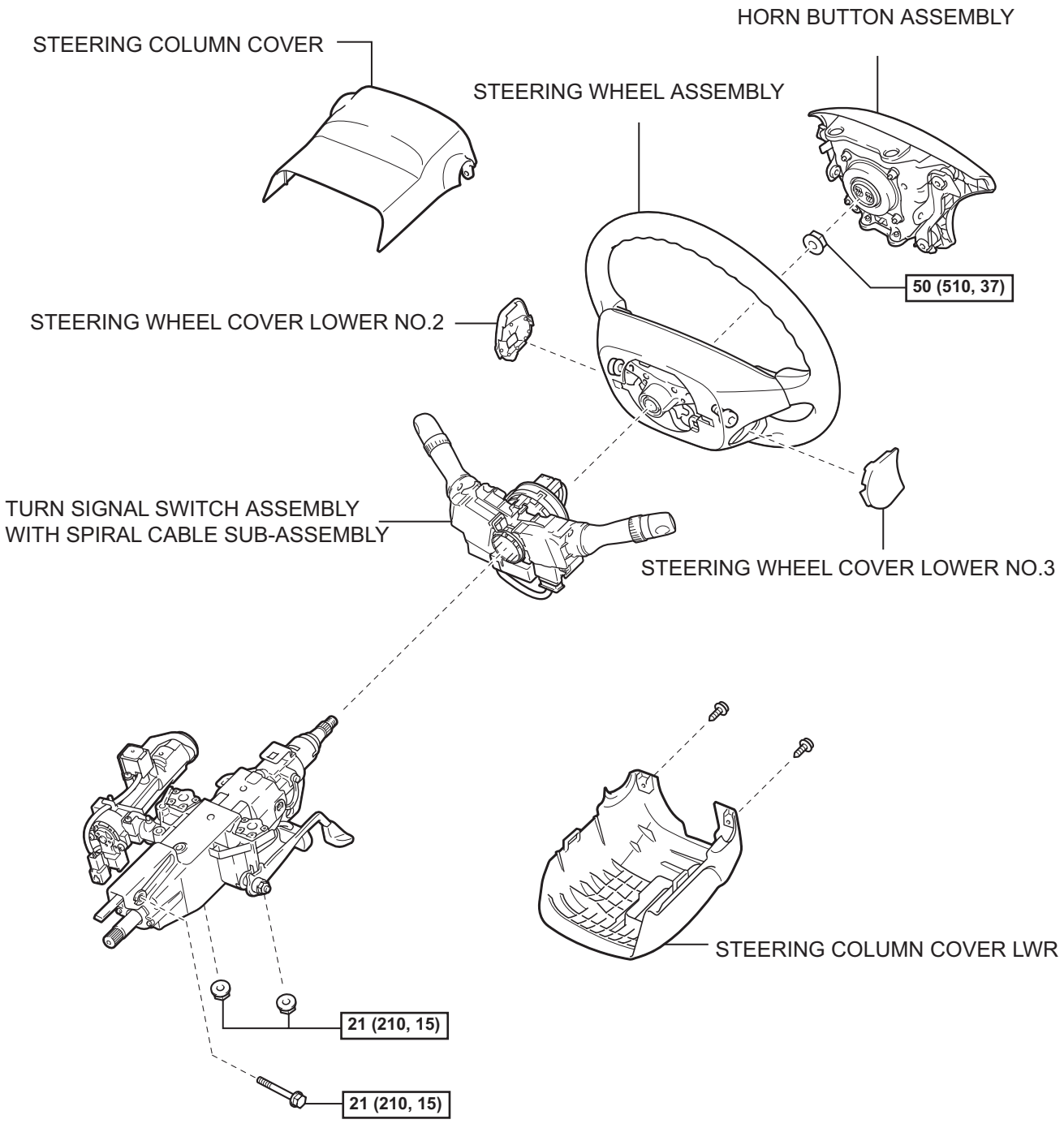

N*m (kgf*cm, ft.*lbf) : Specified torque

P

C114901E01

SR

W/O SMART KEY SYSTEM:

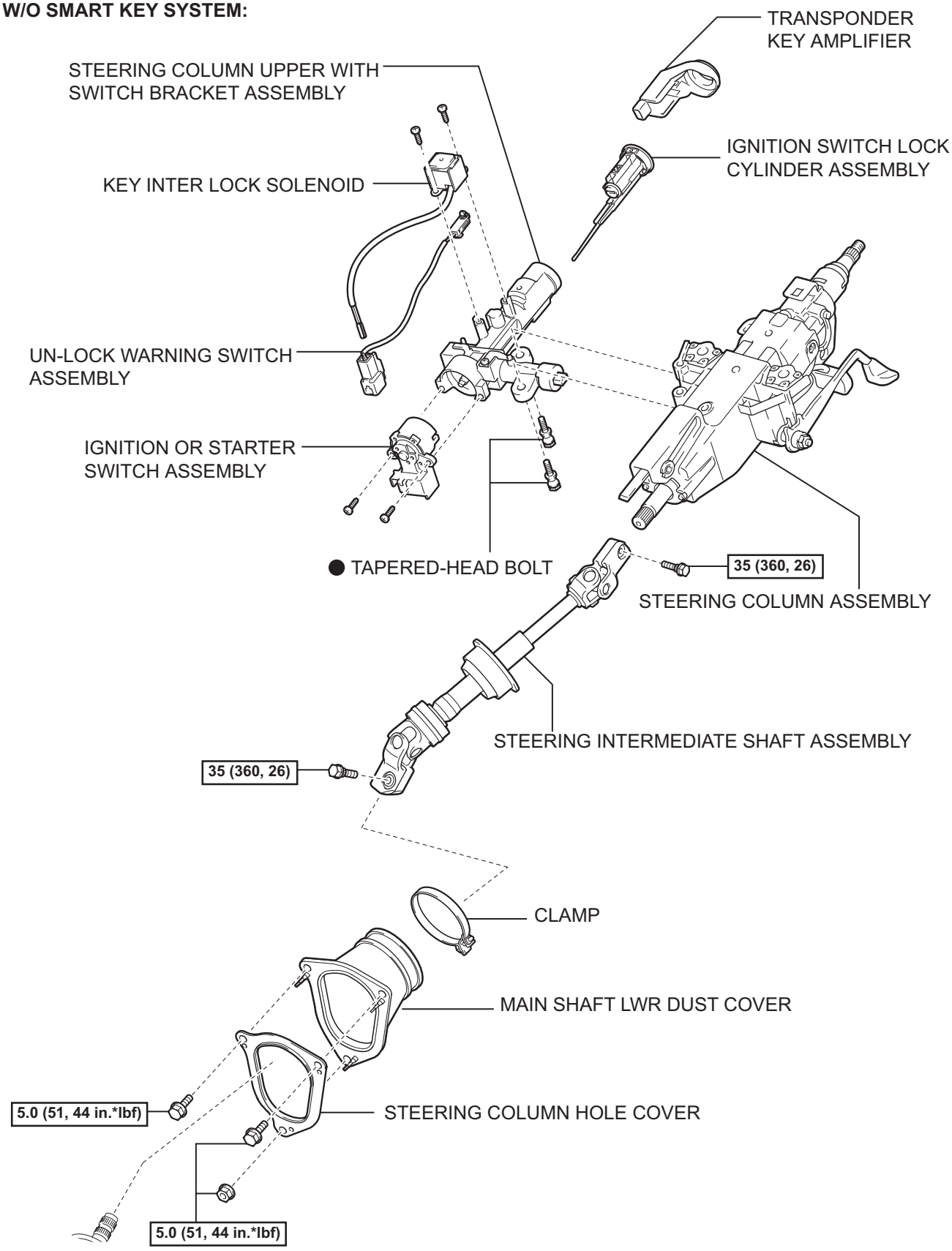

N*m (kgf*cm, ft.*lbf) : Specified torque ● Non-reusable part

P

C114902E01

SR

W/ SMART KEY SYSTEM:

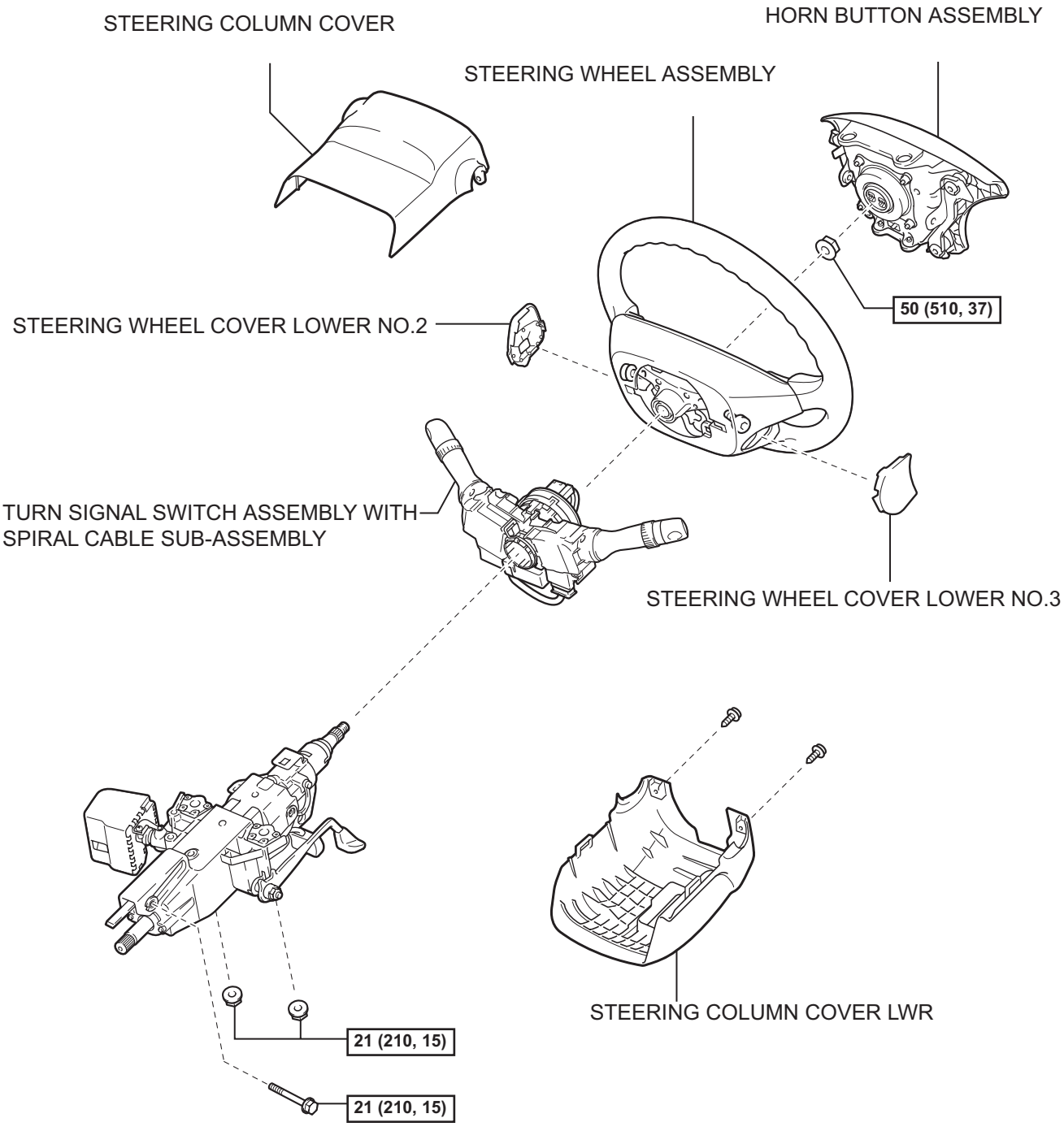

N*m (kgf*cm, ft.*lbf) : Specified torque

P

C114903E01

SR

W/ SMART KEY SYSTEM:

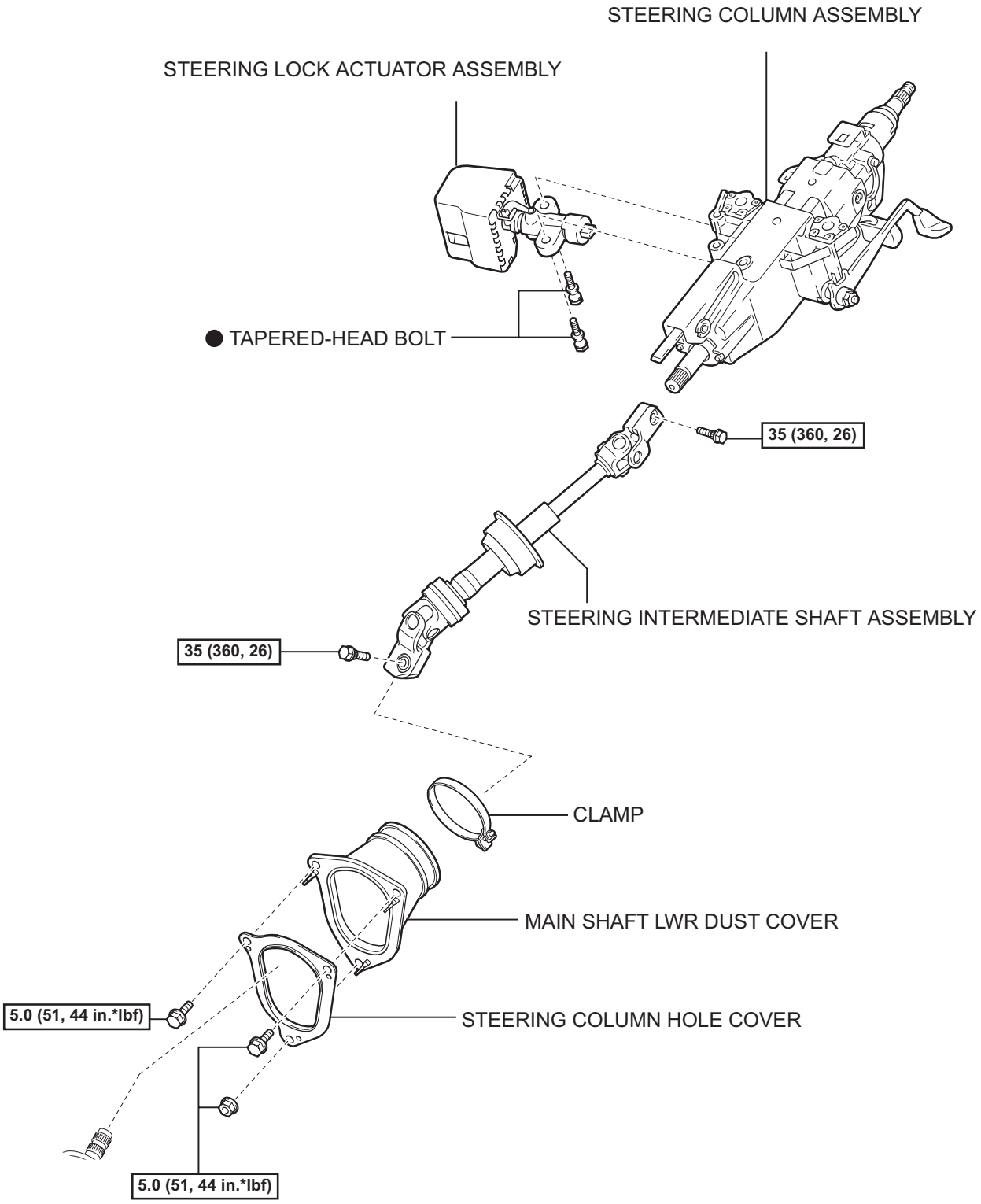

N*m (kgf*cm, ft.*lbf) : Specified torque ● Non-reusable part

P

C114904E01

SR

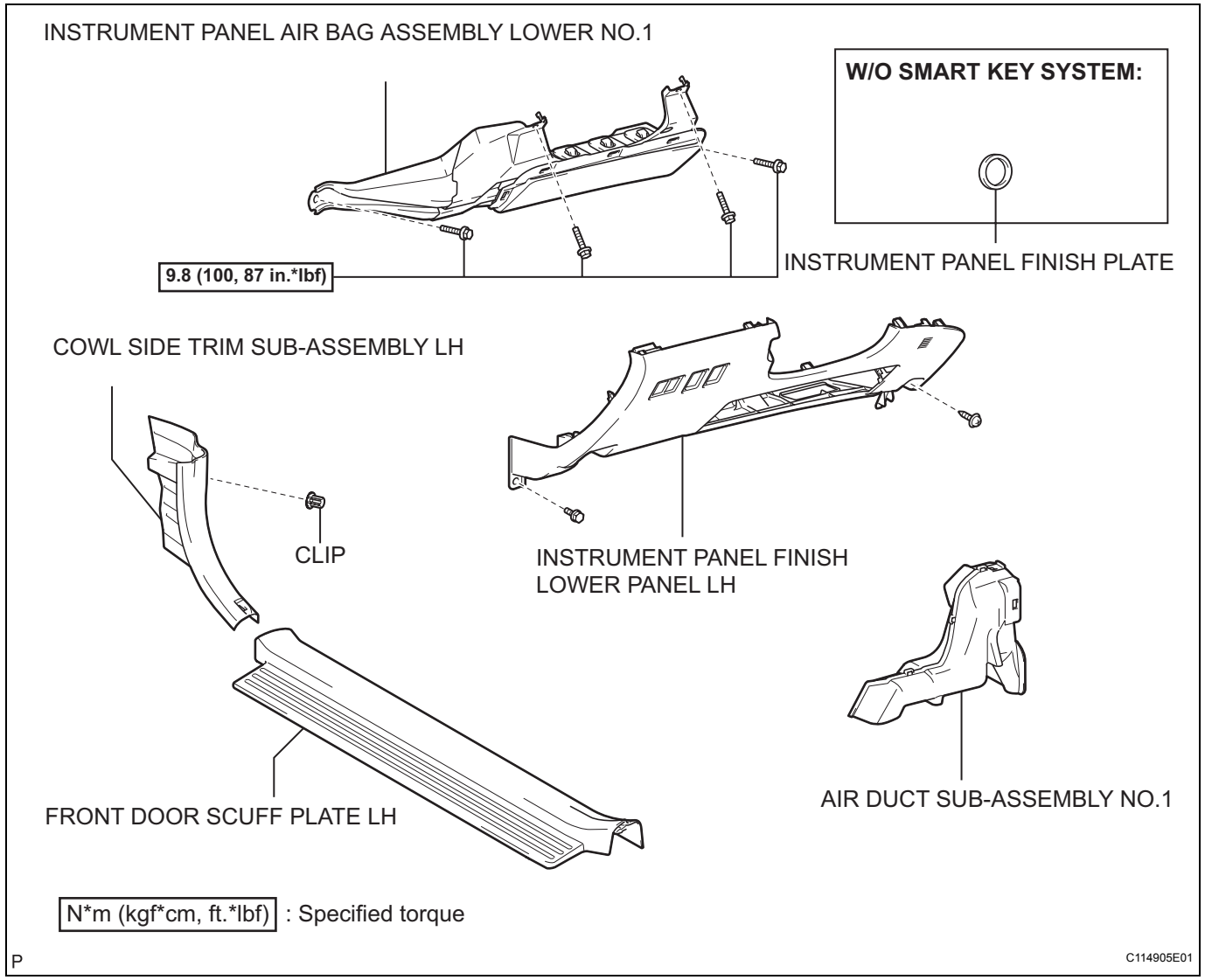
INSTRUMENT PANEL AIR BAG ASSEMBLY LOWER NO.1
W/O SMART KEY SYSTEM:
INSTRUMENT PANEL FINISH PLATE
9.8 (100, 87 in.*lbf)
COWL SIDE TRIM SUB-ASSEMBLY LH
CLIP
INSTRUMENT PANEL FINISH LOWER PANEL LH
AIR DUCT SUB-ASSEMBLY NO.1
FRONT DOOR SCUFF PLATE LH
N*m (kgf*cm, ft.*lbf) : Specified torque
P
C114905E01

SR

REMOVAL

1. **PRECAUTION**
2. **DISCONNECT CABLE FROM NEGATIVE BATTERY TERMINAL**
3. **REMOVE FRONT DOOR SCUFF PLATE LH**
4. **REMOVE COWL SIDE TRIM SUB-ASSEMBLY LH**
5. **REMOVE INSTRUMENT PANEL FINISH LOWER PANEL LH**
6. **REMOVE INSTRUMENT PANEL AIR BAG ASSEMBLY LOWER NO.1**
   HINT:
   (See page RS-328)
7. **REMOVE STEERING WHEEL COVER LOWER NO.2 (See page RS-304)**
8. **REMOVE STEERING WHEEL COVER LOWER NO.3 (See page RS-304)**
9. **PLACE FRONT WHEELS FACING STRAIGHT AHEAD**
10. **REMOVE HORN BUTTON ASSEMBLY (See page RS-304)**
11. **REMOVE STEERING WHEEL ASSEMBLY**
    (a) Remove the steering wheel assembly set nut.
    (b) Put matchmarks on the steering wheel assembly and main shaft assembly.
    (c) Using SST, remove the steering wheel assembly.
    SST 09950-50013 (09951-05010, 09952-05010, 09953-05020, 09954-05021)

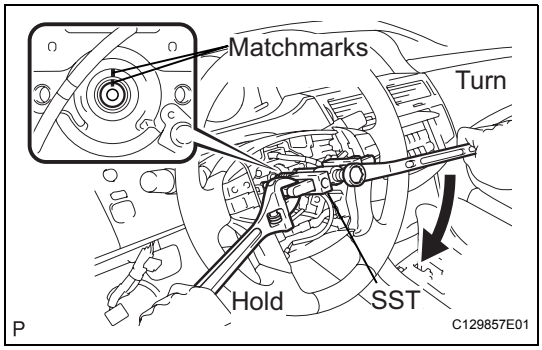

12. **REMOVE STEERING COLUMN COVER LWR**
    (a) Remove the 2 screws.
    (b) Disengage the 2 claws to remove the steering column cover LWR.

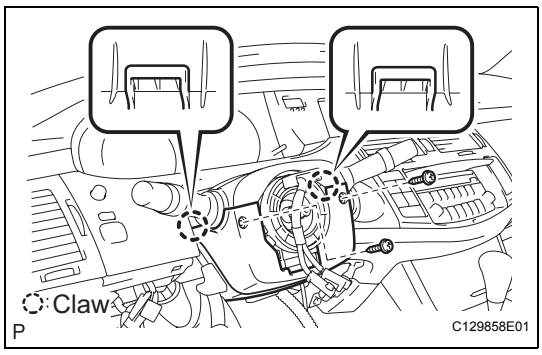

SR

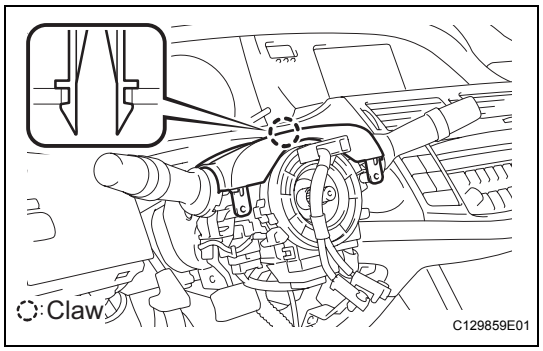

13. REMOVE STEERING COLUMN COVER

(a) Disengage the claw and remove the steering column cover.

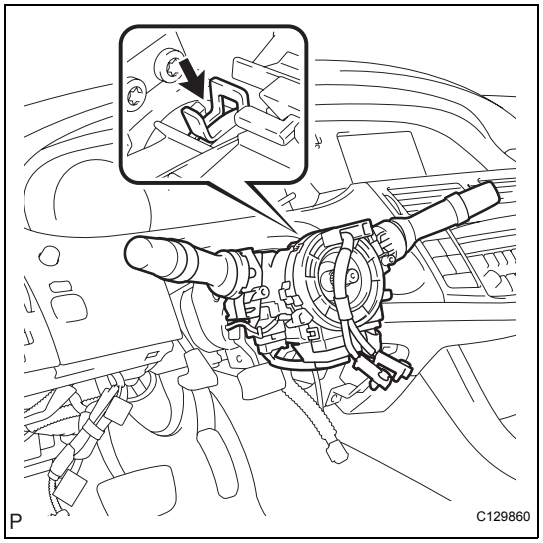

14. REMOVE TURN SIGNAL SWITCH ASSEMBLY WITH SPIRAL CABLE SUB-ASSEMBLY

(a) Disconnect the connectors from the turn signal switch assembly w/ spiral cable sub-assembly .

(b) Remove the clamp and the turn signal switch assembly w/ spiral cable sub-assembly from the steering column assembly.

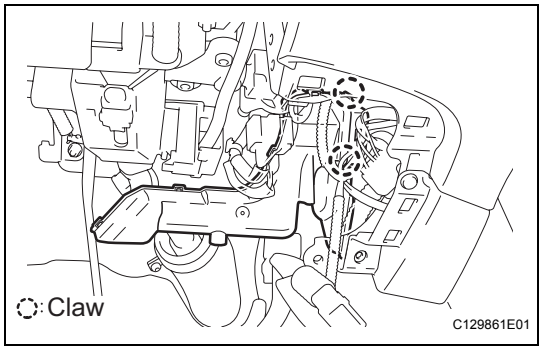

15. REMOVE AIR DUCT SUB-ASSEMBLY NO.1

(a) Disengage the 2 claws and remove the air duct sub-assembly No.1.

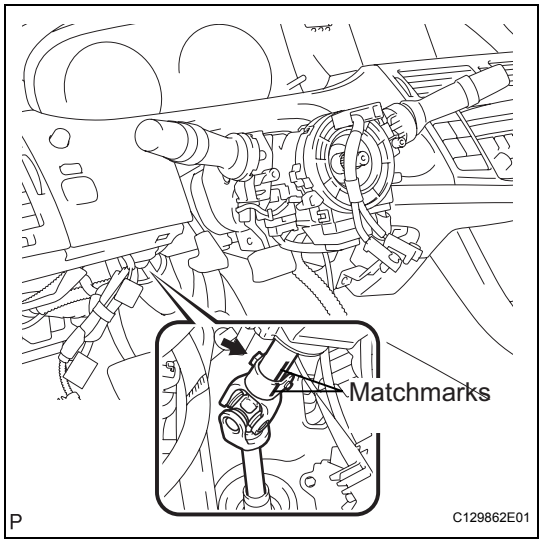

16. SEPARATE STEERING INTERMEDIATE SHAFT ASSEMBLY

(a) Put matchmarks on the steering intermediate shaft assembly and steering column assembly.

(b) Remove the bolt and separate the steering intermediate shaft assembly from the steering column assembly.

17. REMOVE INSTRUMENT PANEL FINISH PLATE

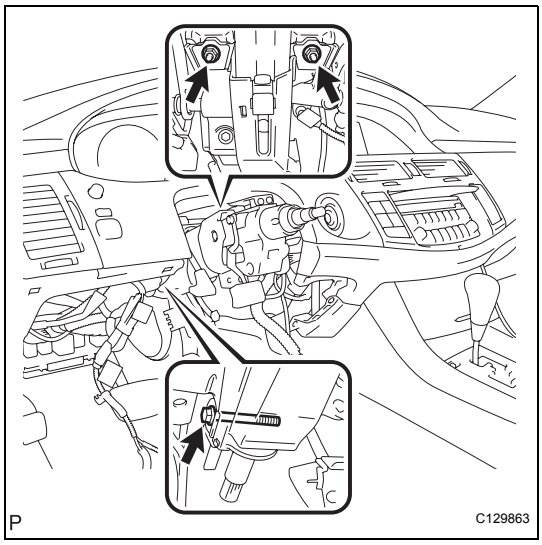

18. REMOVE STEERING COLUMN ASSEMBLY

(a) Disconnect the connectors and wire harness clamps from the steering column assembly.

(b) Remove the bolt, 2 nuts and steering column assembly.

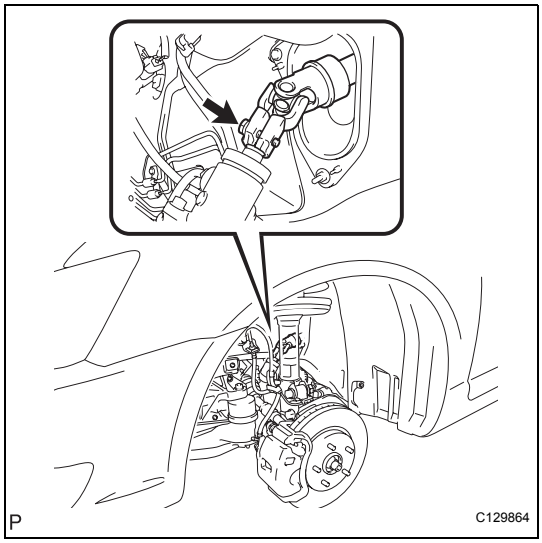

19. REMOVE STEERING INTERMEDIATE SHAFT ASSEMBLY

(a) Remove the bolt, and then slide the steering intermediate shaft assembly No.2.

NOTICE:

Do not separate the steering intermediate shaft assembly.

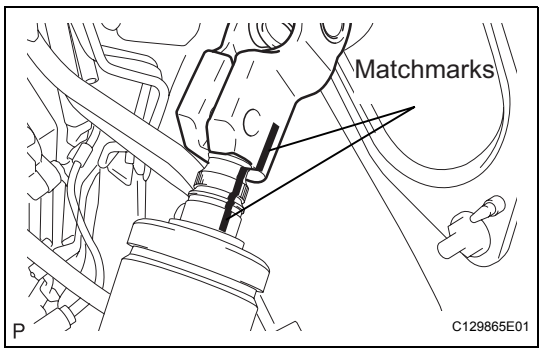

(b) Put matchmarks on the steering intermediate shaft assembly and power steering gear assembly.

(c) Separate the intermediate shaft assembly from the power steering gear assembly.

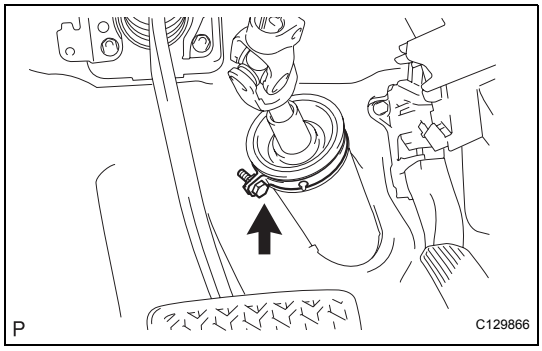

(d) Remove the clamp from the steering column hole shield.

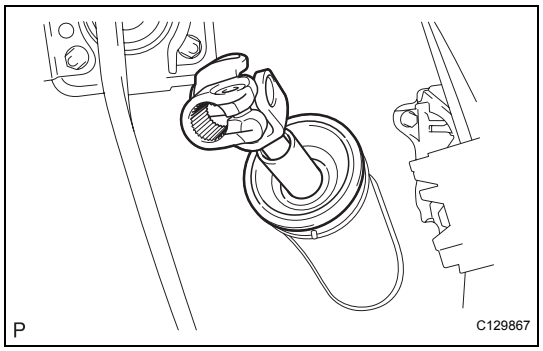

(e) Remove the steering intermediate shaft assembly.

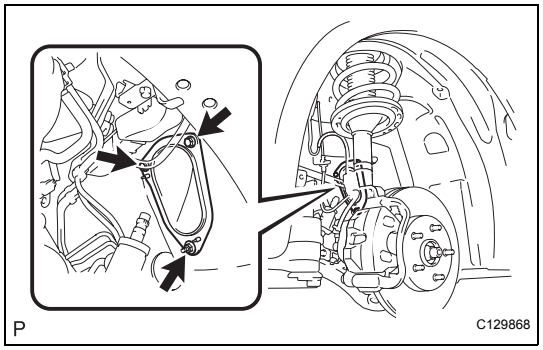

20. REMOVE STEERING COLUMN HOLE COVER

(a) Remove the nut, 2 bolts and steering column hole cover sub-assembly.

(b) Remove the steering column hole cover.

DISASSEMBLY

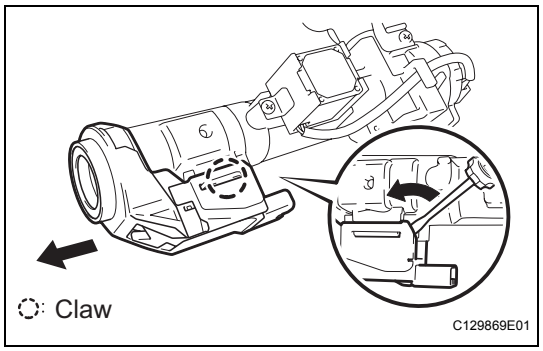

1. REMOVE TRANSPONDER KEY AMPLIFIER

(a) Widen the claws hanging onto the upper bracket by approximately 1.0 mm (0.039 in.) using a screwdriver.

(b) Pull out the transponder key amplifier with the claw open.

NOTICE:

Using excessive force may damage the case.

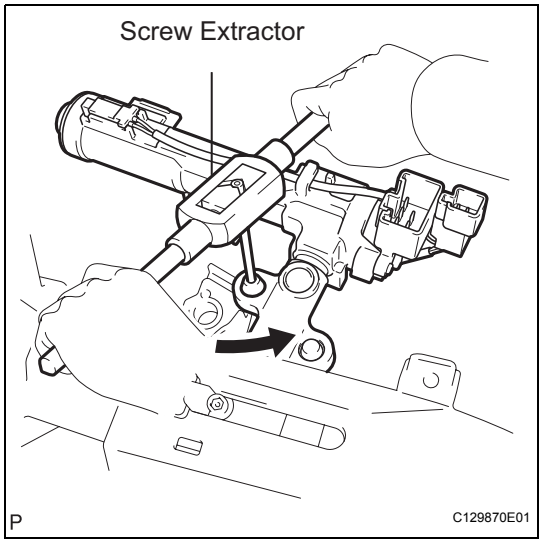

2. REMOVE STEERING COLUMN UPPER WITH SWITCH BRACKET ASSEMBLY

(a) Using a center punch, mark the center of the 2 tapered-head bolts.

(b) Using a 3 to 4 mm (0.12 to 0.16 in.) drill, drill a hole in the 2 bolts.

(c) Using a screw extractor, remove the 2 bolts and steering column upper w/ switch bracket assembly from the steering column assembly.

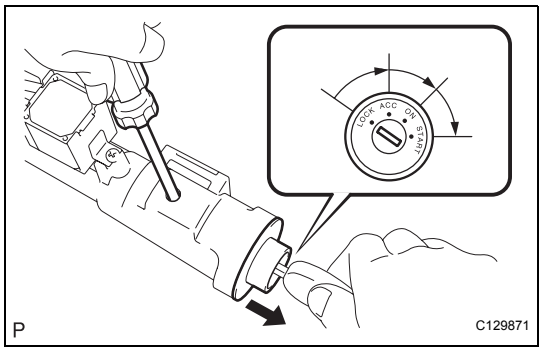

3. REMOVE IGNITION SWITCH LOCK CYLINDER ASSEMBLY

(a) Put the ignition switch lock cylinder assembly in the ACC position.

(b) Push down the stop pin with a screwdriver, and pull out the ignition switch lock cylinder assembly.

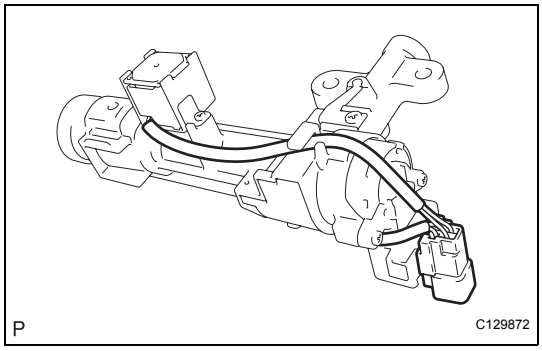

4. REMOVE UN-LOCK WARNING SWITCH ASSEMBLY

(a) Separate the un-lock warning switch assembly connector from the ignition or starter switch assembly.

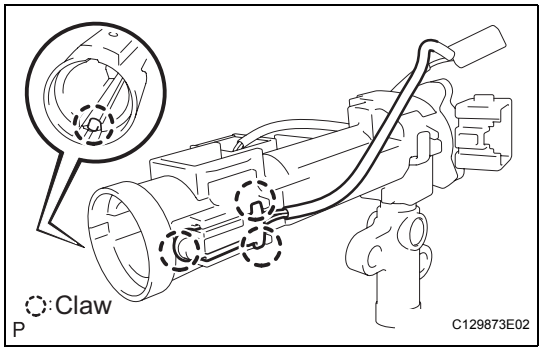

(b) Remove the un-lock warning switch assembly by pushing up the claw of the center part and releasing the 2 claws.

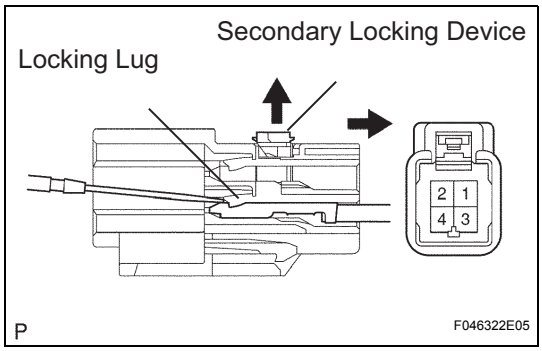

(c) Disengage the secondary locking device.

(d) Using a screwdriver, disengage the locking lug of terminals 3 and 4, and pull the terminals out from the rear side of the un-lock warning switch assembly connector.

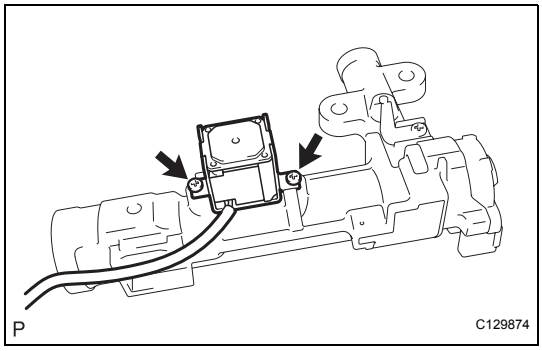

5. REMOVE KEY INTER LOCK SOLENOID

(a) Remove the 2 screws and key inter lock solenoid from the steering column upper w/ switch bracket assembly.

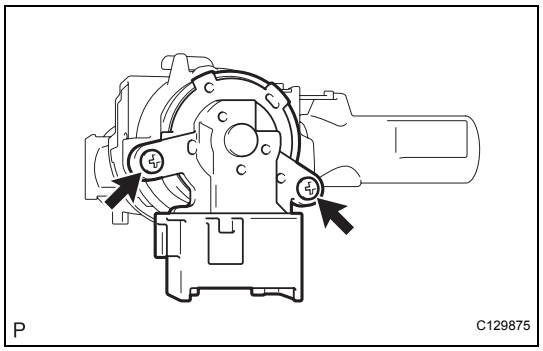

6. REMOVE IGNITION OR STARTER SWITCH ASSEMBLY

(a) Remove the 2 screws and ignition or starter switch assembly from the steering column upper w/ switch bracket assembly.

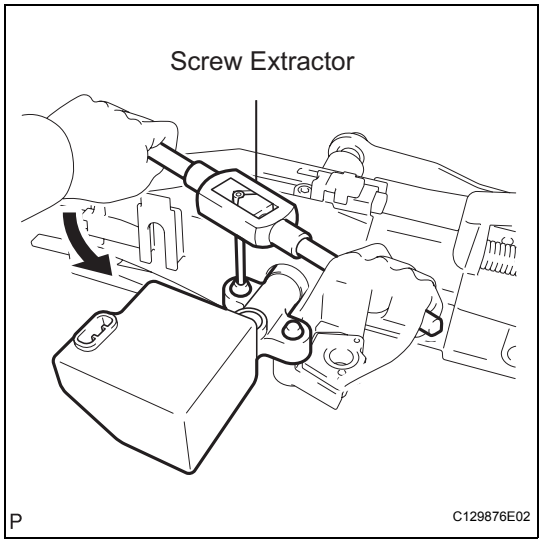

7. REMOVE STEERING LOCK ACTUATOR ASSEMBLY

(a) Using a center punch, mark the center of the 2 tapered-head bolts.

(b) Using a 3 to 4 mm (0.12 to 0.16 in.) drill, drill a hole in the 2 bolts.

(c) Using a screw extractor, remove the 2 bolts and steering lock actuator assembly from the steering column assembly.

REASSEMBLY

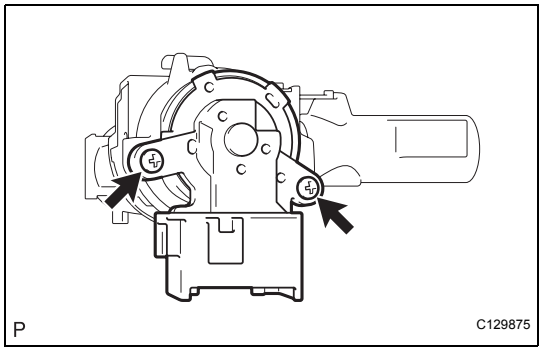

1. INSTALL IGNITION OR STARTER SWITCH ASSEMBLY

(a) Install the ignition or starter switch assembly to the steering column upper w/ switch bracket assembly with the 2 screws.

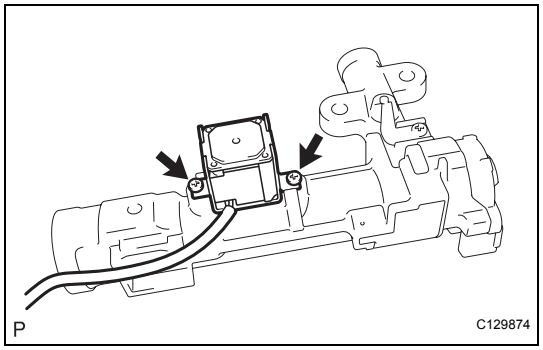

2. INSTALL KEY INTER LOCK SOLENOID

(a) Install the key inter lock solenoid to the steering column upper w/ switch bracket assembly with the 2 screws.

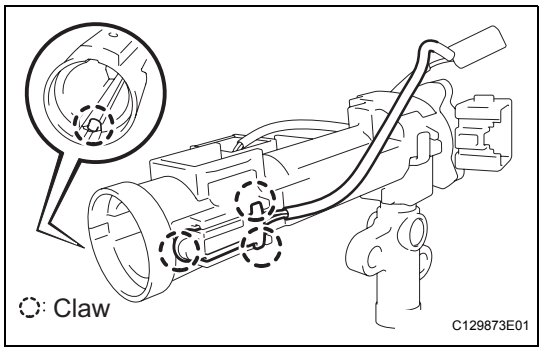

3. INSTALL UN-LOCK WARNING SWITCH ASSEMBLY

(a) Install the un-lock warning switch assembly.

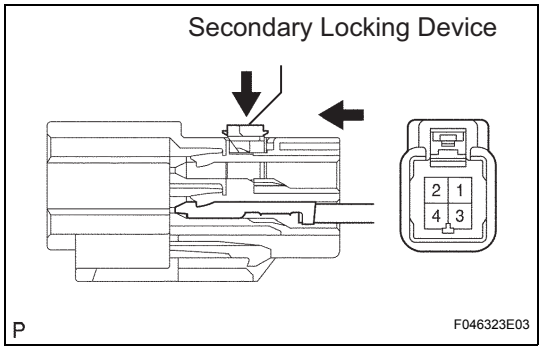

(b) Connect terminals 3 and 4 of the un-lock warning switch assembly connector.
(c) Engage the secondary locking device.
(d) Connect the un-lock warning switch assembly connector to the ignition or starter switch assembly.

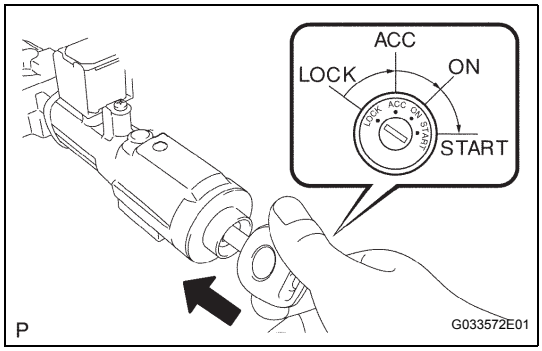

4. INSTALL IGNITION SWITCH LOCK CYLINDER ASSEMBLY

(a) Make sure the ignition switch lock cylinder assembly is in the ACC position.
(b) Install the ignition switch lock cylinder assembly.
(c) Make sure that the ignition switch lock cylinder assembly is securely installed.

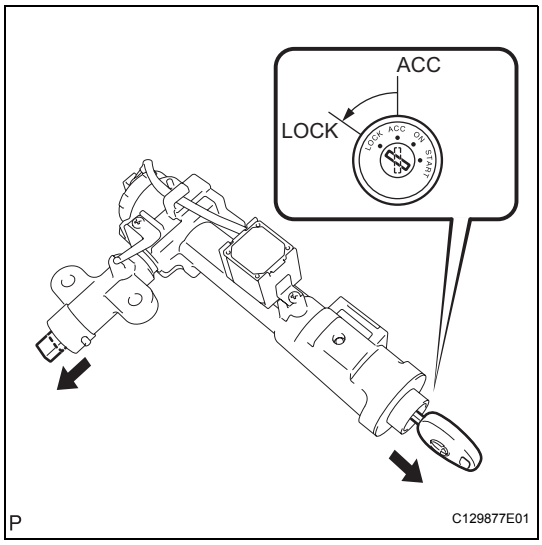

5. INSPECT STEERING LOCK OPERATION

(a) Check that the steering lock mechanism is activated when the key is removed.

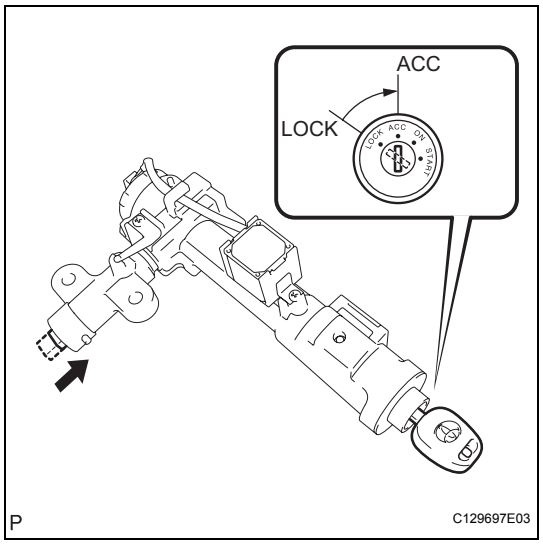

(b) Check that the steering lock mechanism is deactivated when the key is inserted and turned to the ACC position.
HINT:
If there is any abnormality, replace the ignition switch lock cylinder assembly.

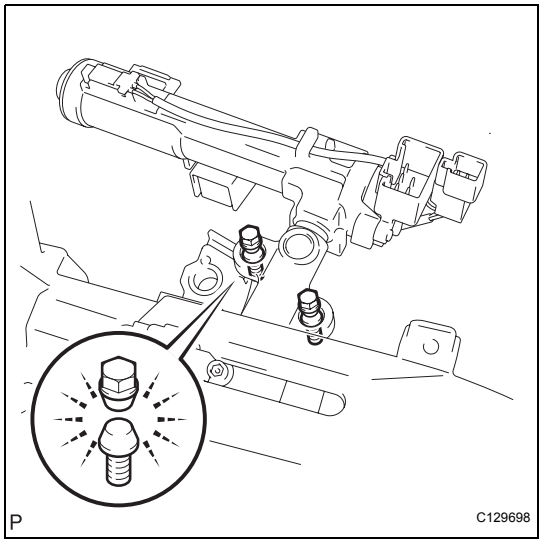

6. INSTALL STEERING COLUMN UPPER WITH SWITCH BRACKET ASSEMBLY

(a) Temporarily install the steering column upper w/ switch bracket assembly with 2 new tapered-head bolts.

(b) Tighten the 2 tapered-head bolts until the bolt heads break off.

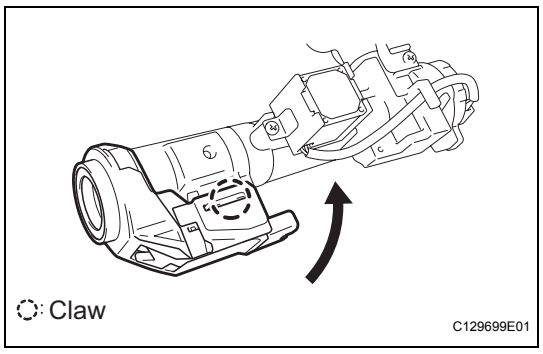

7. INSTALL TRANSPONDER KEY AMPLIFIER

(a) Align the transponder key amplifier with the installation position of the upper bracket with the amplifier inclined.

(b) Push the transponder key amplifier up and install it to the upper bracket.
NOTICE:
Do not push the amplifier up with excessive force.

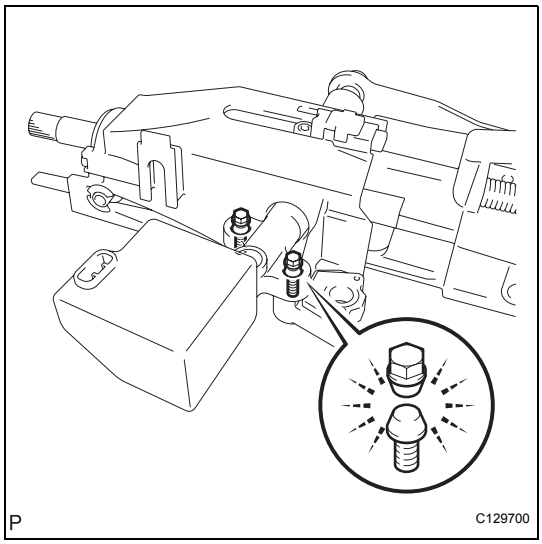

8. INSTALL STEERING LOCK ACTUATOR ASSEMBLY

(a) Temporarily install the steering lock actuator assembly with 2 new tapered-head bolts.

(b) Tighten the 2 tapered-head bolts until the bolt heads break off.

INSTALLATION

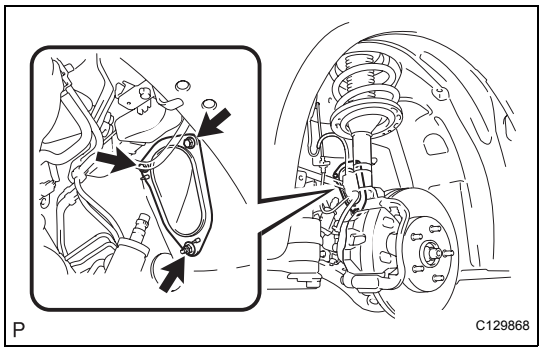

1. INSTALL STEERING COLUMN HOLE COVER

(a) Install the steering column hole cover to the main shaft LWR dust cover.

(b) Install the steering column hole cover sub-assembly with the nut and 2 bolts.
Torque: 5.0 N*m (51 kgf*cm, 44 ft.*lbf)

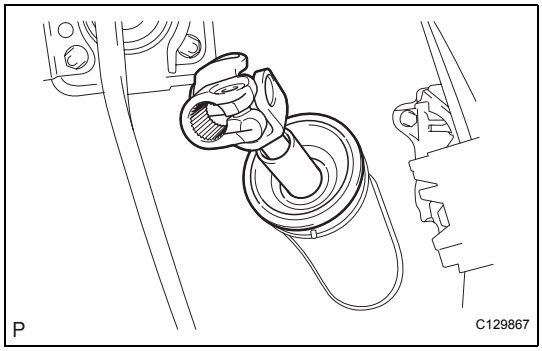

2. INSTALL STEERING INTERMEDIATE SHAFT ASSEMBLY

(a) Install the steering intermediate shaft assembly.

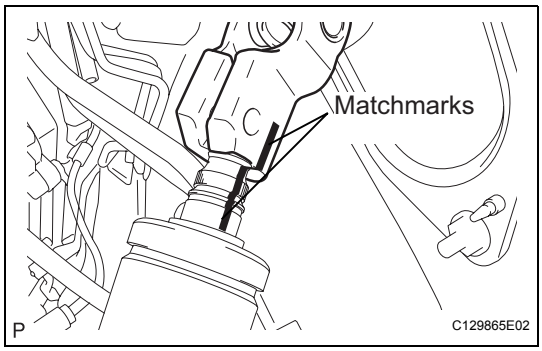

(b) Align the matchmarks on the steering intermediate shaft assembly and the power steering gear assembly.

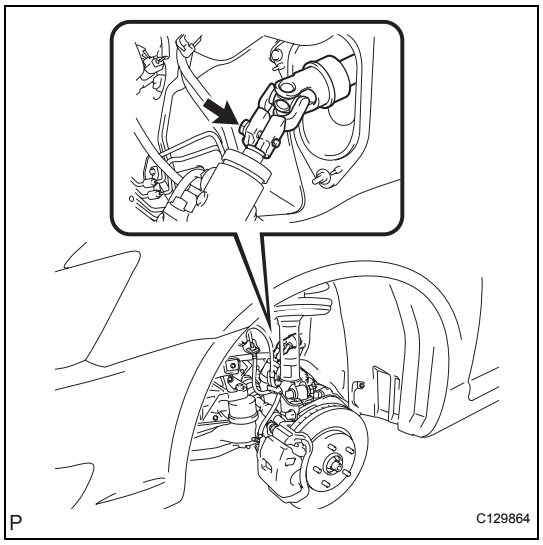

(c) Install the bolt.
Torque: 35 N*m (360 kgf*cm, 26 ft.*lbf)

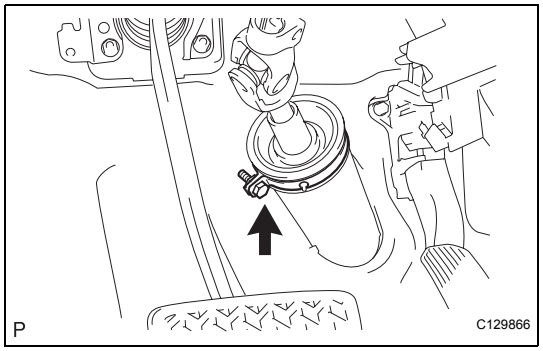

(d) Install the clamp to the steering column hole shield with the bolt.

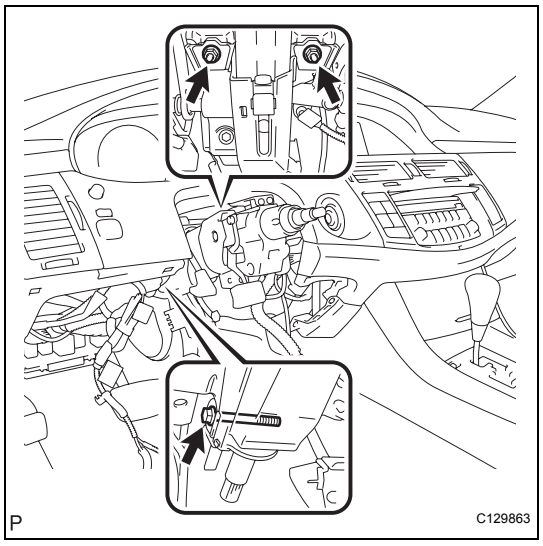

3. INSTALL STEERING COLUMN ASSEMBLY

(a) Install the steering column assembly with the bolt and 2 nuts.
Torque: 21 N*m (210 kgf*cm, 15 ft.*lbf)

(b) Connect the connectors.

(c) Install the wire harness clamps to the steering column assembly.

4. INSTALL INSTRUMENT PANEL FINISH PLATE

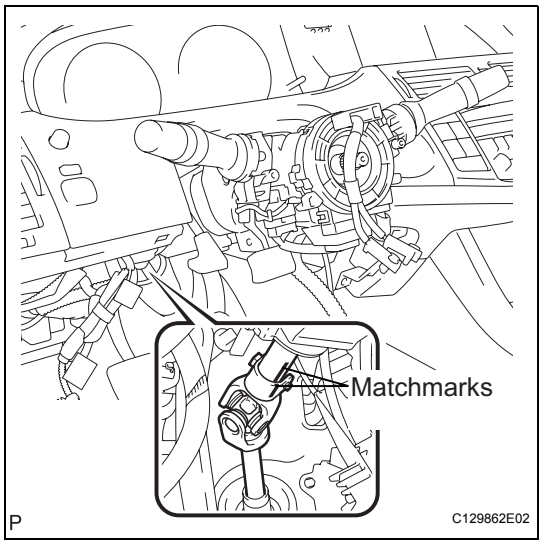

5. CONNECT STEERING INTERMEDIATE SHAFT ASSEMBLY

(a) Align the matchmarks on the intermediate shaft assembly and the steering column assembly.

(b) Install the bolt.
Torque: 35.0 N*m (360 kgf*cm, 26 ft.*lbf)

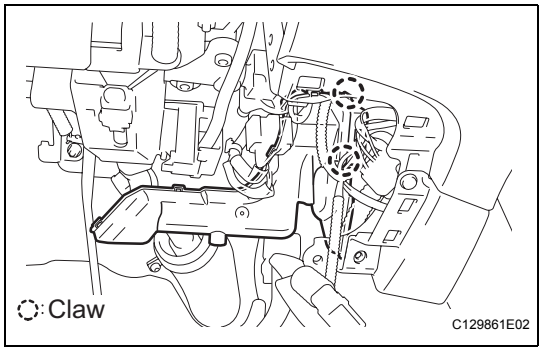

6. INSTALL AIR DUCT SUB-ASSEMBLY NO.1

(a) Engage the 2 claws to install the air duct sub-assembly No.1.

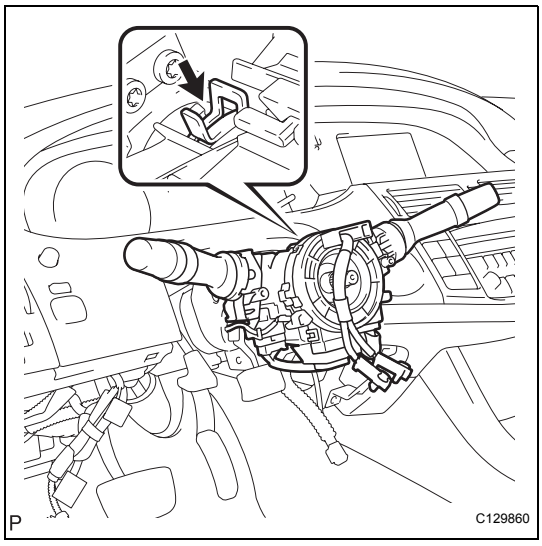

7. INSTALL TURN SIGNAL SWITCH ASSEMBLY WITH SPIRAL CABLE SUB-ASSEMBLY

(a) Install the turn signal switch assembly w/ spiral cable sub-assembly to the steering column assembly with the clamp.

(b) Install the connectors to the turn signal switch assembly w/ spiral cable sub-assembly.

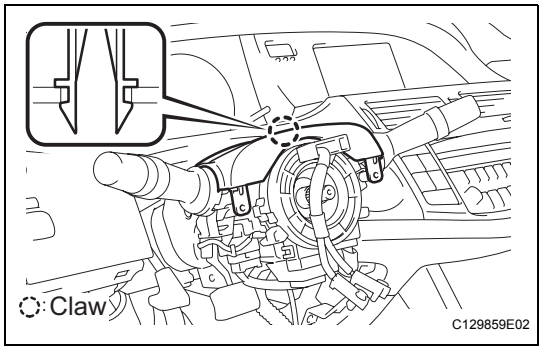

8. INSTALL STEERING COLUMN COVER

(a) Engage the claw to install the steering column cover.

SR

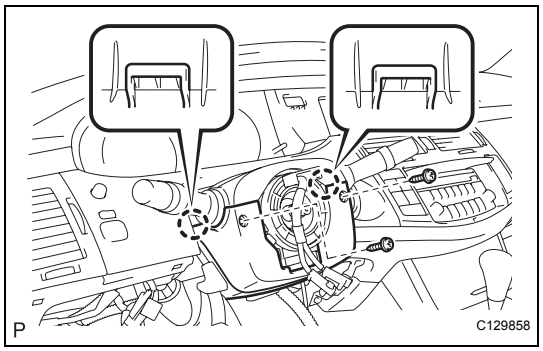

9. INSTALL STEERING COLUMN COVER LWR

(a) Install the steering column cover LWR with the 2 screws.

10. PLACE FRONT WHEELS FACING STRAIGHT AHEAD

11. CHECK KEY INTERLOCK OPERATION

HINT:
If there is any abnormality, replace the key interlock solenoid.

12. CENTER SPIRAL CABLE

13. INSTALL STEERING WHEEL ASSEMBLY

(a) Align the matchmarks on the steering wheel assembly and the steering main shaft assembly.

(b) Install the steering wheel assembly with the set nut.
Torque: 50 N*m (510 kgf*cm, 37 ft.*lbf)

(c) Connect the connector.

14. INSTALL HORN BUTTON ASSEMBLY (See page RS-305)

15. INSTALL STEERING WHEEL COVER LOWER NO.2 (See page RS-305)

16. INSTALL STEERING WHEEL COVER LOWER NO.3 (See page RS-305)

17. INSTALL INSTRUMENT PANEL AIR BAG ASSEMBLY LOWER NO.1 (See page RS-330)

18. INSTALL INSTRUMENT PANEL FINISH LOWER PANEL LH

19. INSTALL COWL SIDE TRIM SUB-ASSEMBLY LH

20. INSTALL FRONT DOOR SCUFF PLATE LH

21. INSPECT STEERING WHEEL CENTER POINT

HINT:
When the steering wheel is not properly centered, remove and refit to center.

22. CONNECT CABLE TO NEGATIVE BATTERY TERMINAL

23. INSPECT SRS WARNING LIGHT

24. PERFORM INITIALIZATION

HINT:
Some systems need initialization when disconnecting the cable from the negative battery terminal.

SUSPENSION SYSTEM

HOW TO PROCEED WITH TROUBLESHOOTING

HINT:
This is a flow chart for vehicle pull.

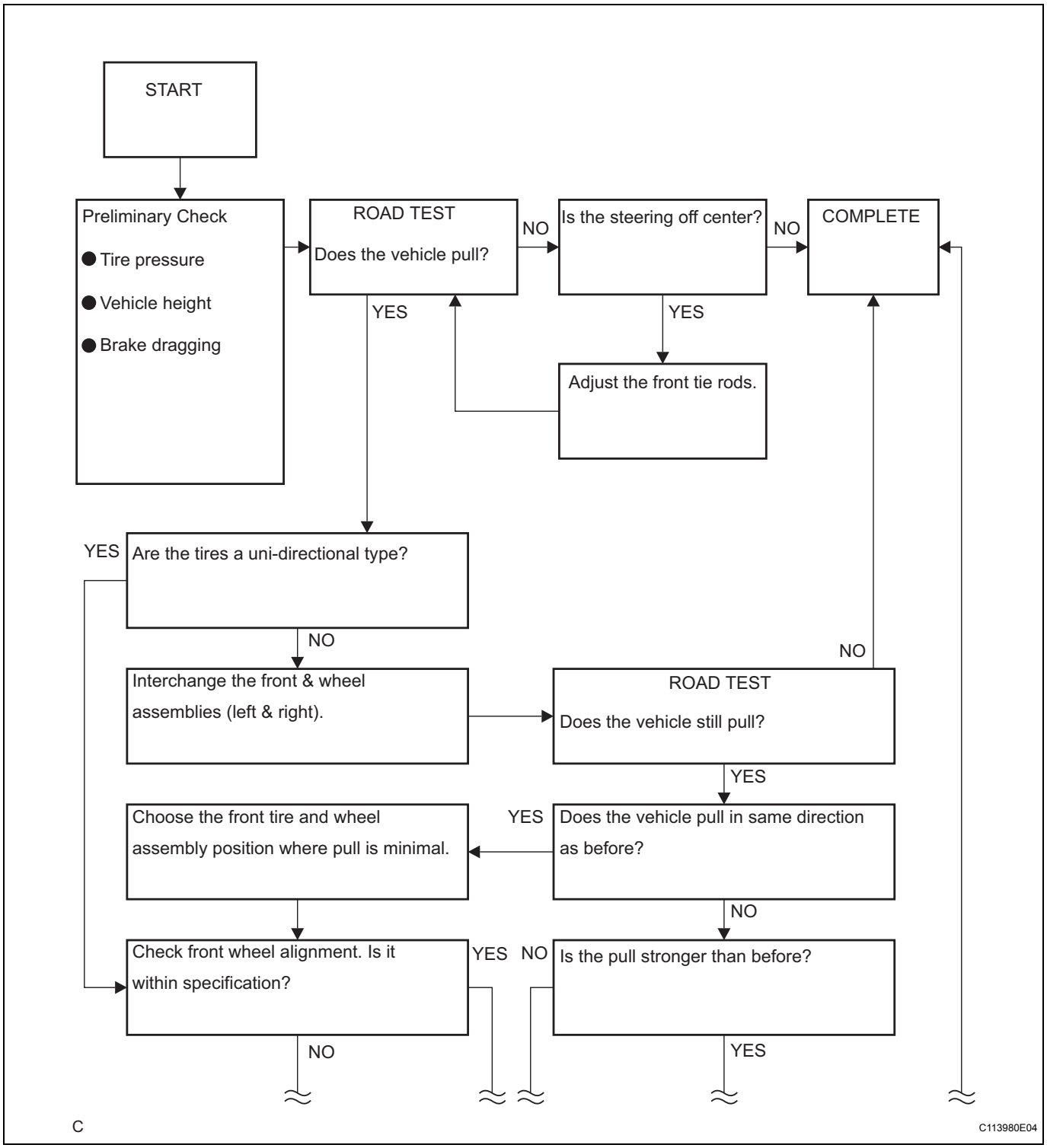

SP

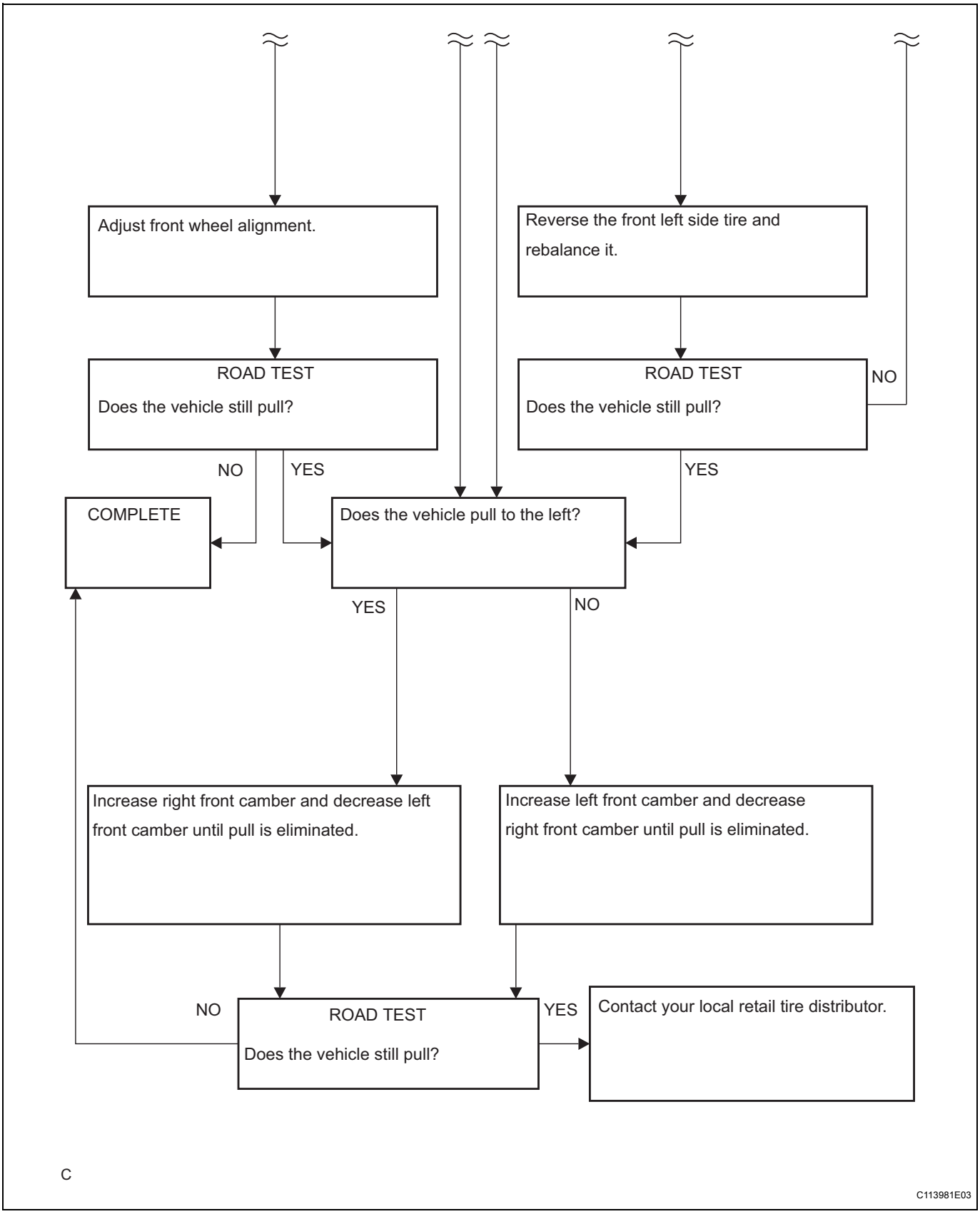
Adjust front wheel alignment.
Reverse the front left side tire and rebalance it.
ROAD TEST
Does the vehicle still pull?
NO
YES
ROAD TEST
Does the vehicle still pull?
NO
YES
COMPLETE
Does the vehicle pull to the left?
YES
NO
Increase right front camber and decrease left front camber until pull is eliminated.
Increase left front camber and decrease right front camber until pull is eliminated.
NO
ROAD TEST
Does the vehicle still pull?
YES
Contact your local retail tire distributor.
C
C113981E03

SP

PROBLEM SYMPTOMS TABLE

Use the table below to help determine the cause of the problem. The numbers indicate the priority of the possible cause of the problem. Check each part in order. If necessary, replace these parts.

SUSPENSION SYSTEM

Symptom	Suspected area	See page
Bottoming	1. Vehicle (Overloaded)	SP-15
	2. Spring (Weak)	SP-15
	3. Shock absorber (Worn)	SP-15
Sways/pitches	1. Tire (Worn or improperly inflated)	TW-2
	2. Stabilizer bar (Bent or broken)	SP-29
	3. Shock absorber (Worn)	SP-15
Front wheel shimmy	1. Tire (Worn or improperly inflated)	TW-2
	2. Wheel (Out of balance)	TW-2
	3. Shock absorber (Worn)	SP-15
	4. Wheel alignment (Incorrect)	SP-4
	5. Ball joint (Worn)	SP-25
	6. Hub bearing (Worn)	AH-5
	7. Steering linkage (Loose or worn)	PS-23
Rear wheel shimmy	1. Tires (Worn or improperly inflated)	TW-2
	2. Wheels (Out of balance)	TW-2
	3. Shock absorbers (Worn)	SP-36
	4. Wheel alignment (Incorrect)	SP-11
	5. Hub bearing (Worn)	AH-15
Abnormal tire wear	1. Tire (Worn or improperly inflated)	TW-2
	2. Wheel alignment (Incorrect) (Front)	SP-4
	3. Wheel alignment (Incorrect) (Rear)	SP-11
	4. Shock absorber (Worn) (Front)	SP-15
	5. Shock absorber (Worn) (Rear)	SP-36
	6. Suspension parts (Worn) (Front)	SP-15
	7. Suspension parts (Worn) (Rear)	SP-35
Vehicle pull	1. Tire	TW-2
	2. Tire pressure (incorrect)	TW-2
	3. Wheel alignment (Incorrect) (Front)	SP-4
	4. Wheel alignment (Incorrect) (Rear)	SP-11
	5. Brake (Dragging) (Front)	BR-27
	6. Brake (Dragging) (Rear)	BR-34
	7. Steering wheel (Off center)	SR-2

FRONT WHEEL ALIGNMENT

ADJUSTMENT

1. INSPECT TIRE

(a) Inspect the tire (See page TW-2).

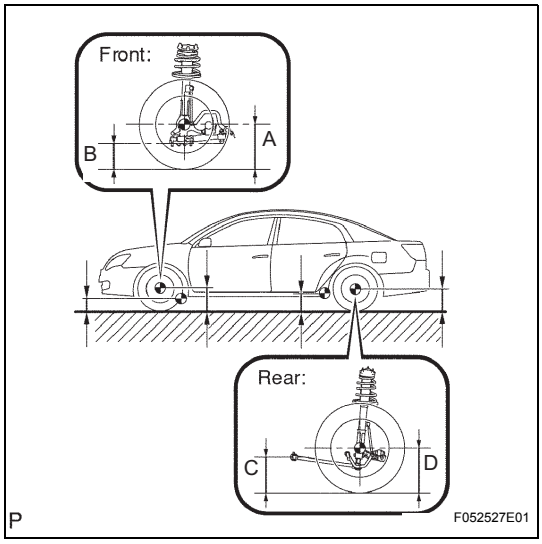

2. MEASURE VEHICLE HEIGHT

(a) Measure the vehicle height.

Vehicle height:

XL

Front (A - B)	**122 mm (4.80 in.)**
Rear (D - C)	**45 mm (1.77 in.)**

TOURING

Front (A - B)	**127 mm (5.00 in.)**
Rear (D - C)	**50 mm (1.97 in.)**

XLS

Front (A - B)	**126 mm (4.96 in.)**
Rear (D - C)	**49 mm (1.93 in.)**

LIMITED

Front (A - B)	**126 mm (4.96 in.)**
Rear (D - C)	**52 mm (2.05 in.)**

Measuring points:

A:
Ground clearance of front wheel center

B:
Ground clearance of front suspension arm sub-assembly lower No. 2 set bolt head center

C:
Ground clearance of strut rod set bolt center

D:
Ground clearance of rear wheel center

NOTICE:

Before inspecting the wheel alignment, adjust the vehicle height to the specified value.

HINT:

Bounce the vehicle at the corners up and down to stabilize the suspension and inspect the vehicle height.

SP

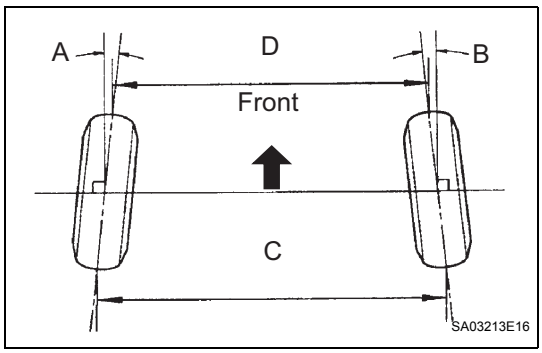

3. INSPECT TOE-IN

(a) Inspect the toe-in.

Toe-in

Toe-in: (total)	**-**
A + B:	**0 ° +- 6' (0° +- 0.1°)**
C - D:	**0 +- 1 mm (0 +- 0.04 in.)**

HINT:

- Measure "C - D" only when "A + B" cannot be measured.

- If toe-in is not within the specified range, adjust it at the rack ends.

4. ADJUST TOE-IN

(a) Remove the rack boot set clips.
(b) Loosen the tie rod end lock nuts.
(c) Turn the right and left rack ends by an equal amount to adjust toe-in.
HINT:
Try to adjust toe-in to the center of the specified range.

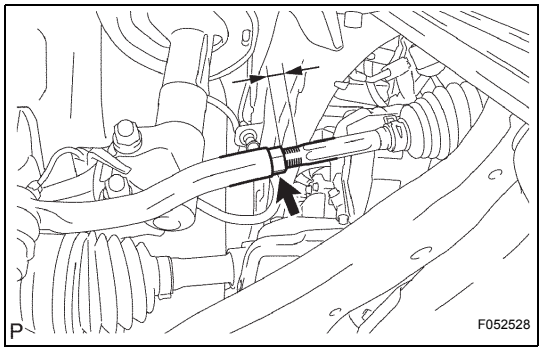

(d) Make sure that the lengths of the right and left rack ends are the same.
(e) Torque the tie rod end lock nuts.
Torque: 74 N*m (755 kgf*cm, 55 ft.*lbf)
(f) Place the boots on the seats and install the clips.
HINT:
Make sure that the boots are not twisted.
(g) with VSC:
Perform VSC system calibration (See page BC-104).

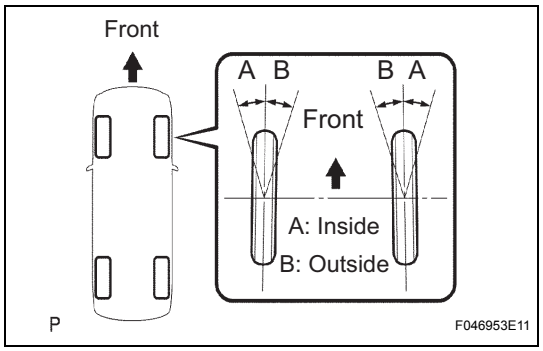

5. INSPECT WHEEL ANGLE

(a) Turn the steering wheel fully left and right and measure the turning angle.
Wheel turning angle:
XL

Inside wheel	Outside wheel: Reference
38°37' +- 2° (38.62° +- 2°)	33°47' (33.78°)

TOURING

Inside wheel	Outside wheel: Reference
38°27' +- 2° (38.45° +- 2°)	33°41' (33.68°)

XLS

Inside wheel	Outside wheel: Reference
38°29' +- 2° (38.48° +- 2°)	33°43' (33.72°)

LIMITED

Inside wheel	Outside wheel: Reference
38°27' +- 2° (38.45° +- 2°)	33°40' (33.67°)

If the right and left inside wheel angles differ from the specified range, check and adjust the right and left rack end lengths.

SP

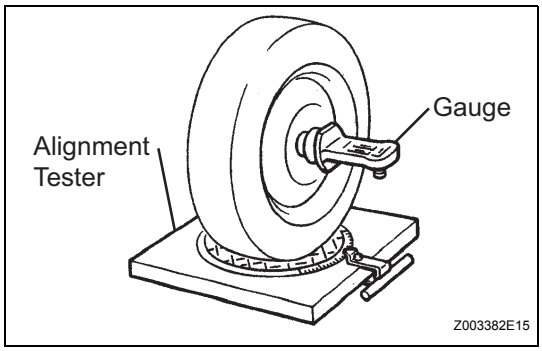

6. INSPECT CAMBER, CASTER AND STEERING AXIS INCLINATION

(a) Put the front wheel on the center of the alignment tester.

(b) Install the camber-caster-kingpin gauge at the center of the axle hub or drive shaft.

(c) Inspect the camber, caster and steering axis inclination.

Camber, caster and steering axis inclination:

XL

Camber Right-left error	Caster Right-left error	Steering axis inclination Right-left error
-0°40' +- 45' (-0.67° +- 0.75°) 45'(0.75°) or less	2°39' +- 45' (2.65° +- 0.75°) 45'(0.75°) or less	12°15' +- 45' (12.25° +- 0.75°) 45'(0.75°) or less

TOURING

Camber Right-left error	Caster Right-left error	Steering axis inclination Right-left error
-0°43' +- 45' (-0.72° +- 0.75°) 45' (0.75°) or less	2°43' +- 45' (2.72° +- 0.75°) 45' (0.75°) or less	12°22' +- 45' (12.37° +- 0.75°) 45'(0.75°) or less

XLS

Camber Right-left error	Caster Right-left error	Steering axis inclination Right-left error
-0°43' +- 45' (-0.72° +- 0.75°) 45' (0.75°) or less	2°42' +- 45' (2.70° +- 0.75°) 45' (0.75°) or less	12°20' +- 45' (12.33° +- 0.75°) 45' (0.75°) or less

LIMITED

Camber Right-left error	Caster Right-left error	Steering axis inclination Right-left error
-0°43' +- 45' (-0.72° +- 0.75°) 45' (0.75°) or less	2°48' +- 45' (2.80° +- 0.75°) 45' (0.75°) or less	12°20' +- 45' (12.33° +- 0.75°) 45' (0.75°) or less

Check the suspension parts for damaged and/or worn out parts if the caster and steering axis inclination are not within the specified range after the camber has been correctly adjusted.

7. ADJUST CAMBER

NOTICE:

Inspect toe-in after the camber has been adjusted.

(a) Remove the front wheel.

SP

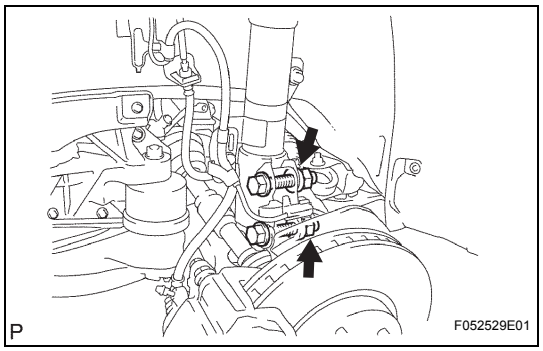

(b) Remove the 2 nuts on the lower side of the shock absorber.
NOTICE:
Keep the bolts inserted.
(c) Clean the installation surfaces of the shock absorber and the steering knuckle.
(d) Temporarily install the 2 nuts.

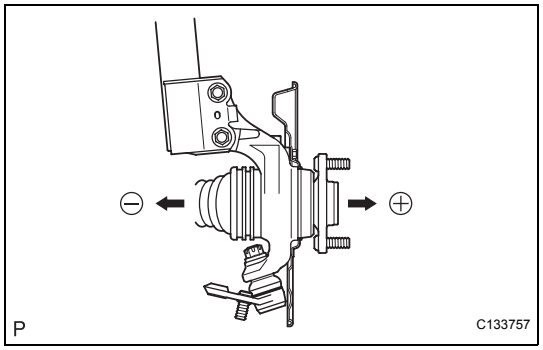

(e) Fully push or pull the front axle hub in the direction of the required adjustment.
(f) Tighten the nuts.
Torque: 210 N*m (2,140 kgf*cm, 155 ft.*lbf)
NOTICE:
Keep the bolts from rotating and torque the nuts when installing the nuts.
(g) Install the front wheel.
Torque: 103 N*m (1,050 kgf*cm, 76 ft.*lbf)

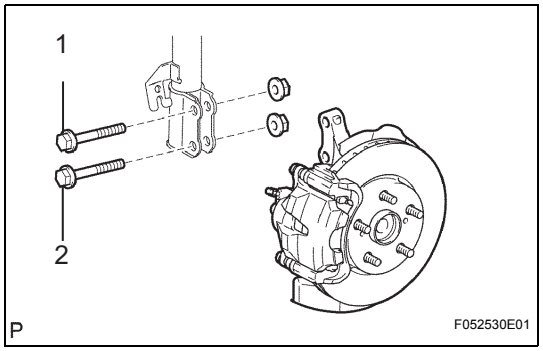

(h) Check the camber.
If the measured value is not within the specification, calculate the required adjustment amount using the formula below.
HINT:
(Camber adjustment amount) = Specified range medium - measured value
Check installed bolts combination. Select appropriate bolts from the table below to adjust the camber to within the specified range.

Move the axle toward (+) in step (e)	Refer to table (1) (Move the axle toward positive side)
Move the axle toward (-) in step (e)	Refer to table (2) (Move the axle toward negative side)

(1) Table (1) (Move the axle toward positive side)

Installed Bolt / Adjusting Value								
	1	90105-A0052	90105-A0052	90105-A0052	90105-A0052	90105-A0003	90105-A0004	90105-A0005
	2	90105-A0052	90105-A0003	90105-A0004	90105-A0005	90105-A0005	90105-A0005	90105-A0005
-1° 30' to -1° 15'								G
-1° 15' to -1° 00'							G	A
-1° 00' to -0° 45'						G	A	B
-0° 45' to -0° 30'					G	A	B	C
-0° 30' to -0° 15'				G	A	B	C	D
-0° 15' to 0°			G	A	B	C	D	E
0° to 0° 15'		A	B	C	D	E	F	
0° 15' to 0° 30'		B	C	D	E	F		
0° 30' to 0° 45'		C	D	E	F			
0° 45' to 1° 00'		D	E	F				
1° 00' to 1° 15'		E	F					
1° 15' to 1° 30'		F						

Selected Bolt Combination

	A	B	C	D	E	F	G
1	90105-A0052	90105-A0052	90105-A0052	90105-A0003	90105-A0004	90105-A0005	90105-A0052
2	90105-A0003	90105-A0004	90105-A0005	90105-A0005	90105-A0005	90105-A0005	90105-A0052

P

C131582E01

The body and suspension may be damaged if the camber is not correctly adjusted according to the above table.

NOTICE:

Replace the nut with a new one when replacing the bolt.

SP

(i) Repeat the steps mentioned above. At step (b), replace 1 or 2 selected bolts.
HINT:
Replace one bolt at a time when replacing 2 bolts.
(1) Table (2) (Move the axle toward negative side)

Installed Bolt / Adjusting Value		1	2	3	4	5	6	7
		90105-A0052	90105-A0052	90105-A0052	90105-A0052	90105-A0003	90105-A0004	90105-A0005
		90105-A0052	90105-A0003	90105-A0004	90105-A0005	90105-A0005	90105-A0005	90105-A0005
-1°30' to -1°15'		F						
-1°15' to -1°00'		E	F					
-1°00' to -0°45'		D	E	F				
-0°45' to -0°30'		C	D	E	F			
-0°30' to -0°15'		B	C	D	E	F		
-0°15' to 0°		A	B	C	D	E	F	
0°to 0°15'			G	A	B	C	D	E
0°15' to 0°30'				G	A	B	C	D
0°30' to 0°45'					G	A	B	C
0°45' to 1°00'						G	A	B
1°00' to 1°15'							G	A
1°15' to 1°30'								G

Selected Bolt Combination

	A	B	C	D	E	F	G
1	90105-A0052	90105-A0052	90105-A0052	90105-A0003	90105-A0004	90105-A0005	90105-A0052
2	90105-A0003	90105-A0004	90105-A0005	90105-A0005	90105-A0005	90105-A0005	90105-A0052

P C131582E02

The body and suspension may be damaged if the camber is not correctly adjusted according to the above table.

SP

NOTICE:
Replace the nut with a new one when replacing the bolt.

(j) Repeat the steps mentioned above. At step (b), replace 1 or 2 selected bolts.
HINT:
Replace one bolt at a time when replacing 2 bolts.

REAR WHEEL ALIGNMENT

ADJUSTMENT

1. INSPECT TIRE

(a) Inspect the tire (See page TW-2).

2. MEASURE VEHICLE HEIGHT

(a) Measure the Vehicle height (See page SP-4).

NOTICE:

Before inspecting wheel alignment, adjust the vehicle height to the specified value.

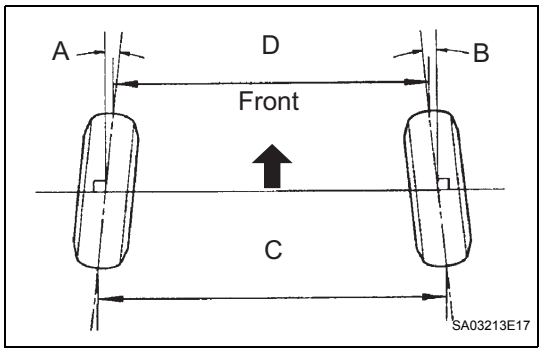

3. INSPECT TOE-IN

(a) Inspect the toe-in.

Toe-in

Toe-in (total)	**-**
A + B:	**0°24' +- 12' (0.40° + 0.20°)**
C -D:	**4 +- 2 mm (0.16 +- 0.08 in.)**

HINT:

- Measure "C - D" only when "A + B" cannot be measured.
- If toe-in is not within the specified range, inspect the suspension parts and replace them if necessary.

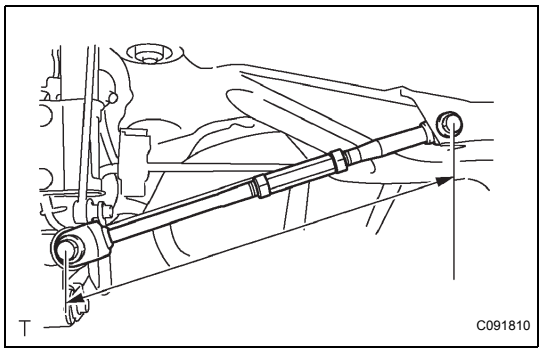

4. ADJUST TOE-IN

(a) Measure the lengths of the right and left No. 2 suspension arms.

No. 2 suspension arm length difference:
1.5 mm (0.06 in.) or less

If the left-right difference is larger than 1.5 mm (0.06 in.), adjust it by following the procedures below.

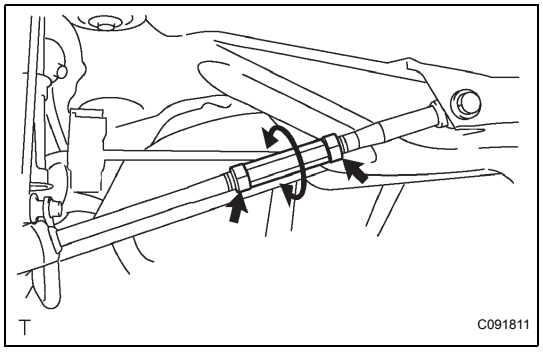

(b) Loosen the 2 lock nuts.

(c) Turn the right and left adjusting tubes by an equal amount to adjust toe-in.

HINT:

- Try to adjust toe-in to the center value.
- One turn of each adjusting tube will adjust toe-in by approximately 1.2°(1°12'), 10.8 mm (0.425 in.).

(d) Torque the 2 lock nuts.

Torque: 56 N*m (570 kgf*cm, 41 ft.*lbf)

5. INSPECT CAMBER

	XL	TOURING
Camber Right-left error	-1°09' +- 45' (-1.15° +- 0.75°) 45' (0.75°) or less	-1°13' +- 45' (-1.22° +- 0.75°) 45' (0.75°) or less
	XLS	LIMITED
	-1°13' +- 45' (-1.22° +- 0.75°) 45' (0.75°) or less	-1°15' +- 45' (-1.25° +- 0.75°) 45' (0.75°) or less

SP

HINT:
Camber is not adjustable. If the measurement is not within the specification, inspect the suspension parts for damage and/or wear, and replace them if necessary.

FRONT SHOCK ABSORBER WITH COIL SPRING

COMPONENTS

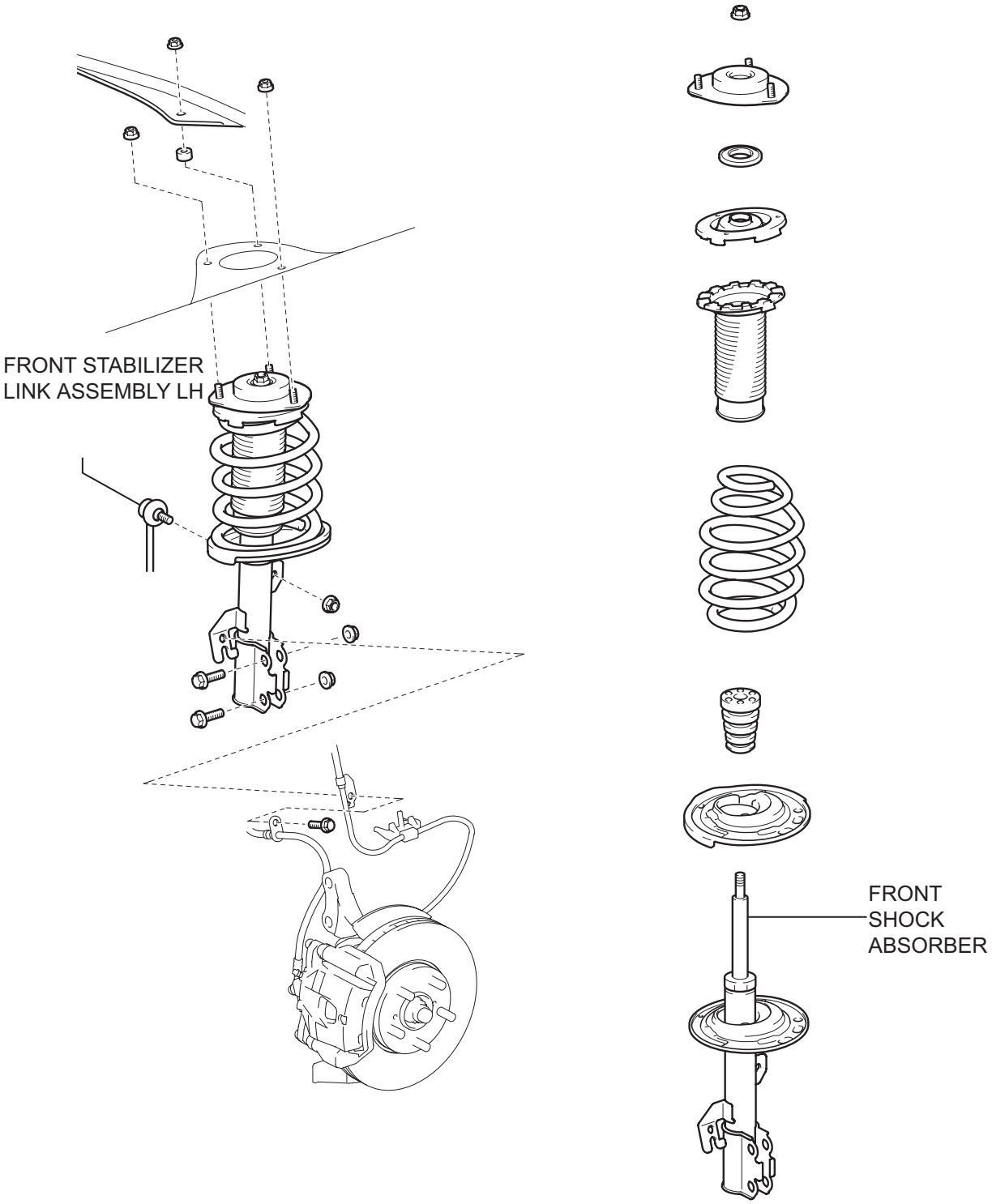

SP

REMOVAL

HINT:
- Use the same procedures for the RH side and LH side.
- The procedures listed below are for the LH side.

1. REMOVE FRONT WHEEL

2. SEPARATE FRONT STABILIZER LINK ASSEMBLY LH

(a) Remove the nut and disconnect the front stabilizer link assembly LH from the shock absorber assembly front LH.
HINT:
Use a hexagon (6 mm) wrench to hold the stud if the ball joint turns together with the nut.

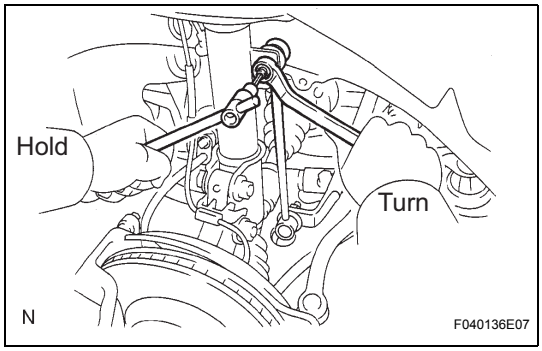

3. REMOVE FRONT SHOCK ABSORBER WITH COIL SPRING

(a) Loosen the lock nut.
HINT:
If not disassembling the shock absorber it is not necessary to loosen the nut.

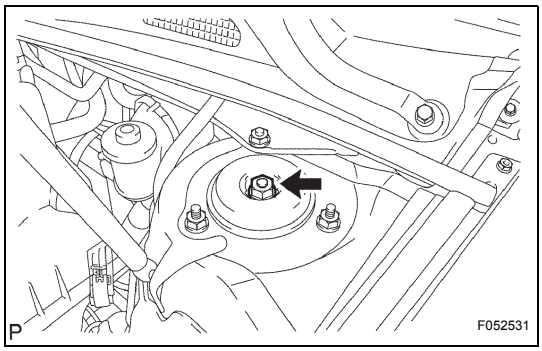

(b) Remove the bolt and disconnect the front flexible hose No. 1 and speed sensor front LH wire harness.

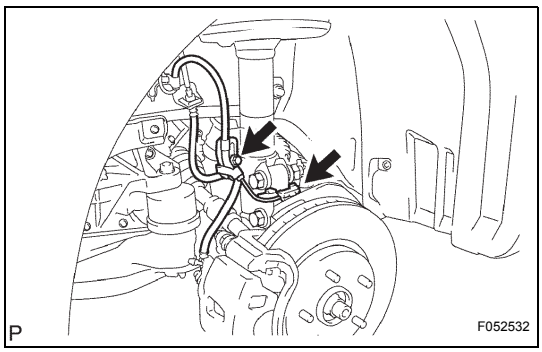

(c) Remove the 2 nuts on the lower side of the front shock absorber with coil spring.
NOTICE:
Keep the bolts inserted.

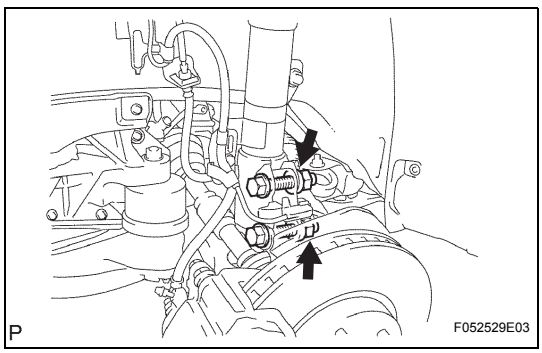

SP

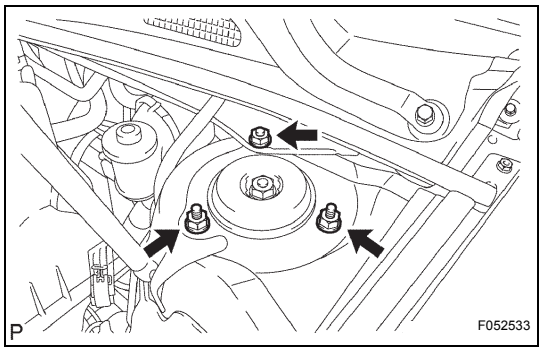

(d) Remove the 3 nuts on the upper side of the front shock absorber with coil spring.

(e) Remove the 2 bolts on the lower side of the front shock absorber and front shock absorber with coil spring.

NOTICE:

Be careful not to drop the collar in the case that there is front suspension upper brace center.

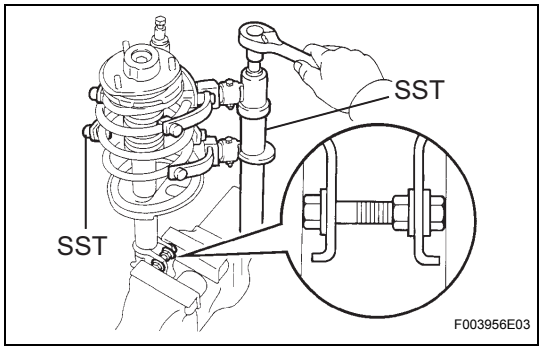

DISASSEMBLY

1. FIX FRONT SHOCK ABSORBER WITH COIL SPRING

(a) As shown in the illustration, secure the front shock absorber with coil spring in a vise by clamping onto a double nutted bolt affixed to the bracket at the bottom of the absorber.

2. REMOVE FRONT SHOCK ABSORBER

(a) Using SST, compress the front coil spring LH.

SST 09727-30021 (09727-00010, 09727-00021)

NOTICE:

Do not use an impact wrench. It will damage the SST.

HINT:

Use 2 SST of the same type.

(b) Remove the front suspension support sub-assembly LH, front suspension support bearing LH, front coil spring seat upper LH, front coil spring insulator upper LH, front coil spring LH, front spring bumper LH and front coil spring insulator lower LH from the shock absorber assembly front LH.

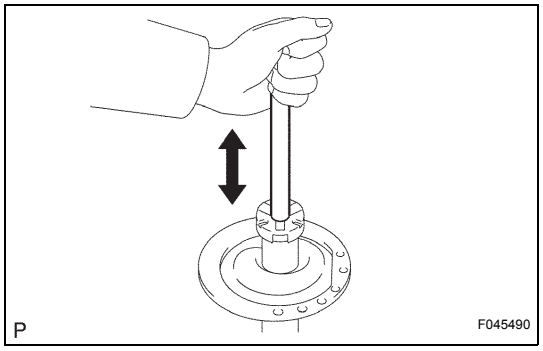

INSPECTION

1. INSPECT FRONT SHOCK ABSORBER

(a) Compress and extend the shock absorber rod 4 or more times. Check that there is no abnormal resistance or sound.

If there is any abnormality, replace the shock absorber assembly front LH with a new one.

NOTICE:

When disposing of the shock absorber assembly front LH, see DISPOSAL (See page SP-18).

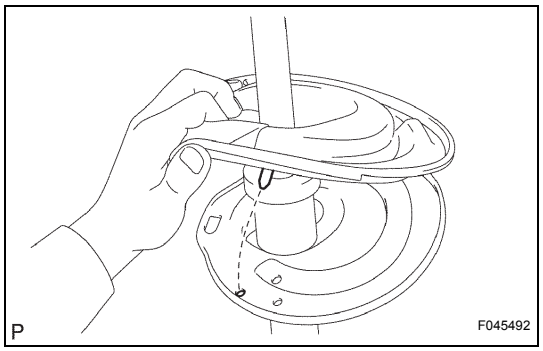

REASSEMBLY

1. INSTALL FRONT SHOCK ABSORBER

(a) Install the front coil spring insulator lower LH onto the shock absorber assembly front LH.

(b) Install the front spring bumper LH to the piston rod.

SP

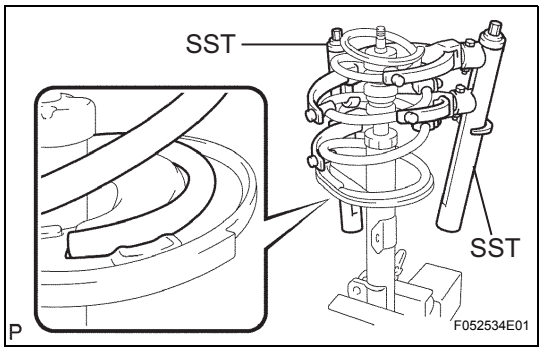

(c) Compress the front coil spring LH using SST.
SST 09727-30021 (09727-00010, 09727-00021)
NOTICE:
Do not use an impact wrench. It will damage the SST.
HINT:
Use 2 SST of the same type.

(d) Install the front coil spring LH to the shock absorber assembly front LH.
HINT:
Fit the lower end of the front coil spring LH into the gap of the front coil spring lower LH.

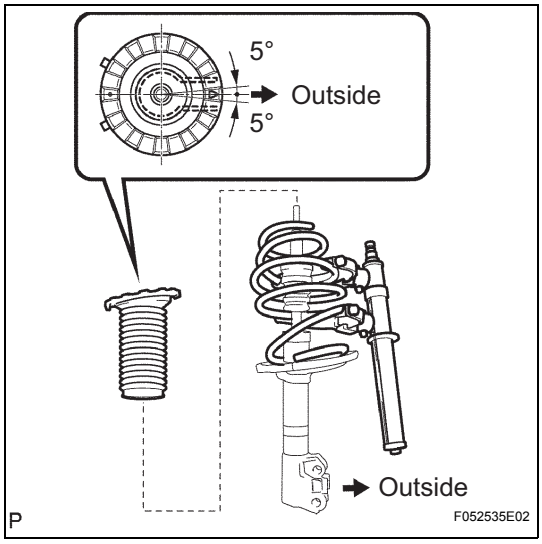

(e) Install the front coil spring insulator upper LH as shown in the illustration.

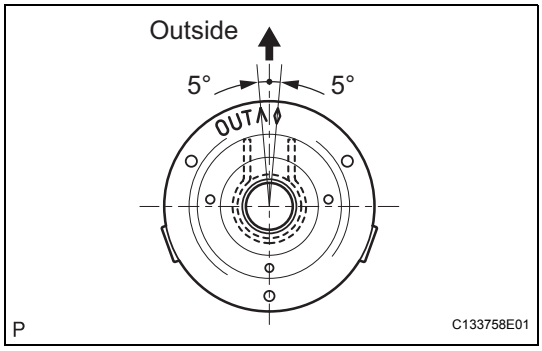

(f) Install the front coil spring seat upper LH to the shock absorber assembly front LH with the mark facing the outside of the vehicle.

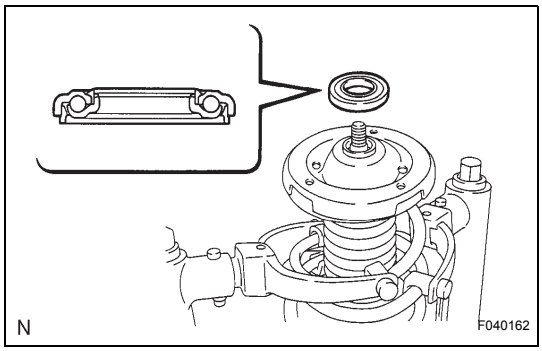

(g) Install a new front suspension support bearing LH as shown in the illustration.

SP

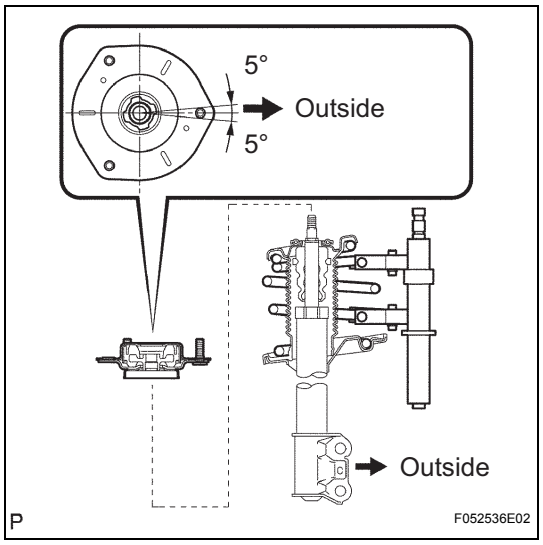

(h) Install the front suspension support sub-assembly LH with the mark facing the outside of the vehicle.
(i) Temporarily tighten a new lock nut.
(j) Remove the SST slowly in order to release the coil spring.
SST 09727-30021 (09727-00010, 09727-00021)

INSTALLATION

1. INSTALL FRONT SHOCK ABSORBER WITH COIL SPRING

(a) Install the front shock absorber with coil spring.
(b) Install the 3 nuts to the upper side of the front shock absorber with coil spring.
Torque: 85 N*m (867 kgf*cm, 63 ft.*lbf)
NOTICE:
Be careful not to drop the collar in the case that there is front suspension upper brace center.

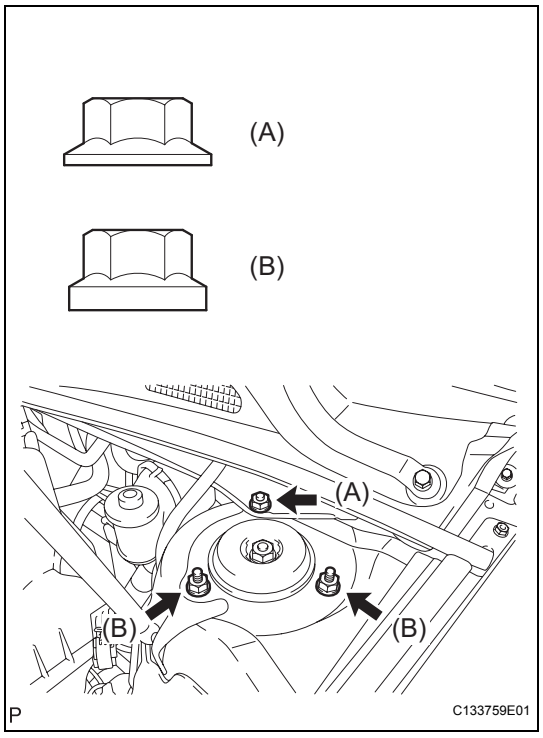

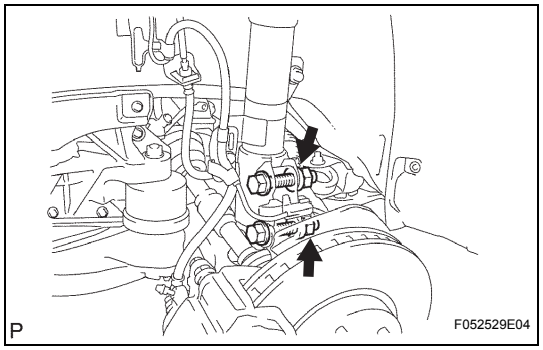

(c) Install the 2 bolts and 2 nuts to the lower side of the front shock absorber with coil spring.
Torque: 210 N*m (2,140 kgf*cm, 155 ft.*lbf)
NOTICE:
Keep the bolts from rotating and torque the 2 nuts when installing the 2 nuts.
HINT:
Insert the bolts from the front side of the vehicle.

SP

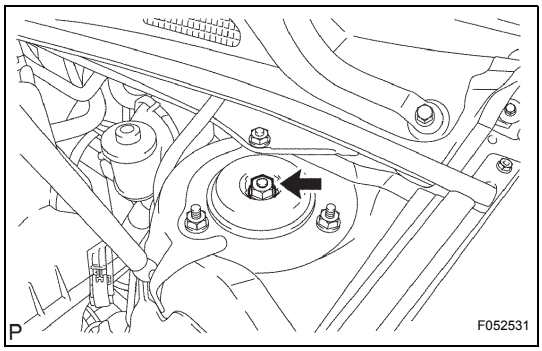

(d) Fully tighten the lock nut.
Torque: 49 N*m (500 kgf*cm, 36 ft.*lbf)

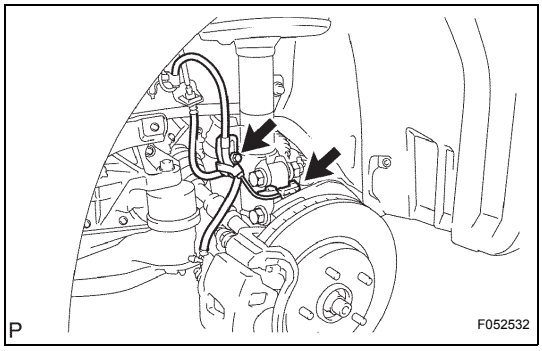

(e) Install the front flexible hose No. 1 and speed sensor front LH with the bolt.
Torque: 19 N*m (192 kgf*cm, 14 ft.*lbf)

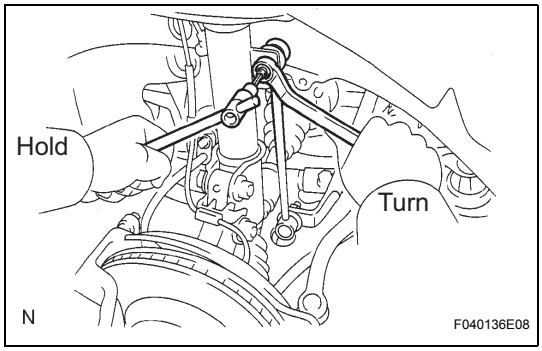

2. INSTALL FRONT STABILIZER LINK ASSEMBLY LH

(a) Install the front stabilizer link assembly LH with the nut.
Torque: 74 N*m (755 kgf*cm, 55 ft.*lbf)
HINT:
Use a hexagon (6 mm) wrench to hold the stud if the ball joint turns together with the nut.

3. INSTALL FRONT WHEEL
Torque: 103 N*m (1,050 kgf*cm, 76 ft.*lbf)

4. INSPECT AND ADJUST FRONT WHEEL ALIGNMENT

(a) Inspect and adjust front wheel alignment (See page SP-4).

DISPOSAL

HINT:
Dispose the RH side following the same procedures as with the LH side.

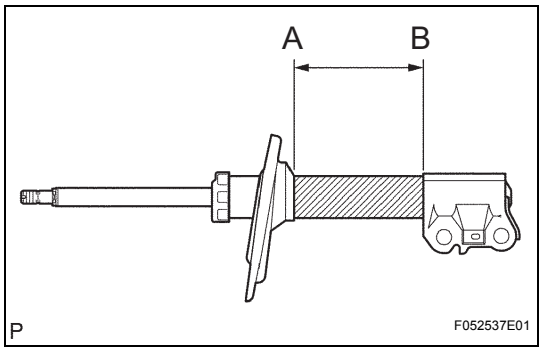

1. DISPOSE OF FRONT SHOCK ABSORBER

(a) Fully extend the shock absorber rod.

(b) Using a drill, make a hole in the cylinder between A and B as shown in the illustration to discharge the gas inside.

CAUTION:

- **Be careful when drilling because shards of metal may fly about, so always use the proper safety equipment.**
- **The gas is colorless, odorless and non-poisonous.**

FRONT LOWER SUSPENSION ARM

COMPONENTS

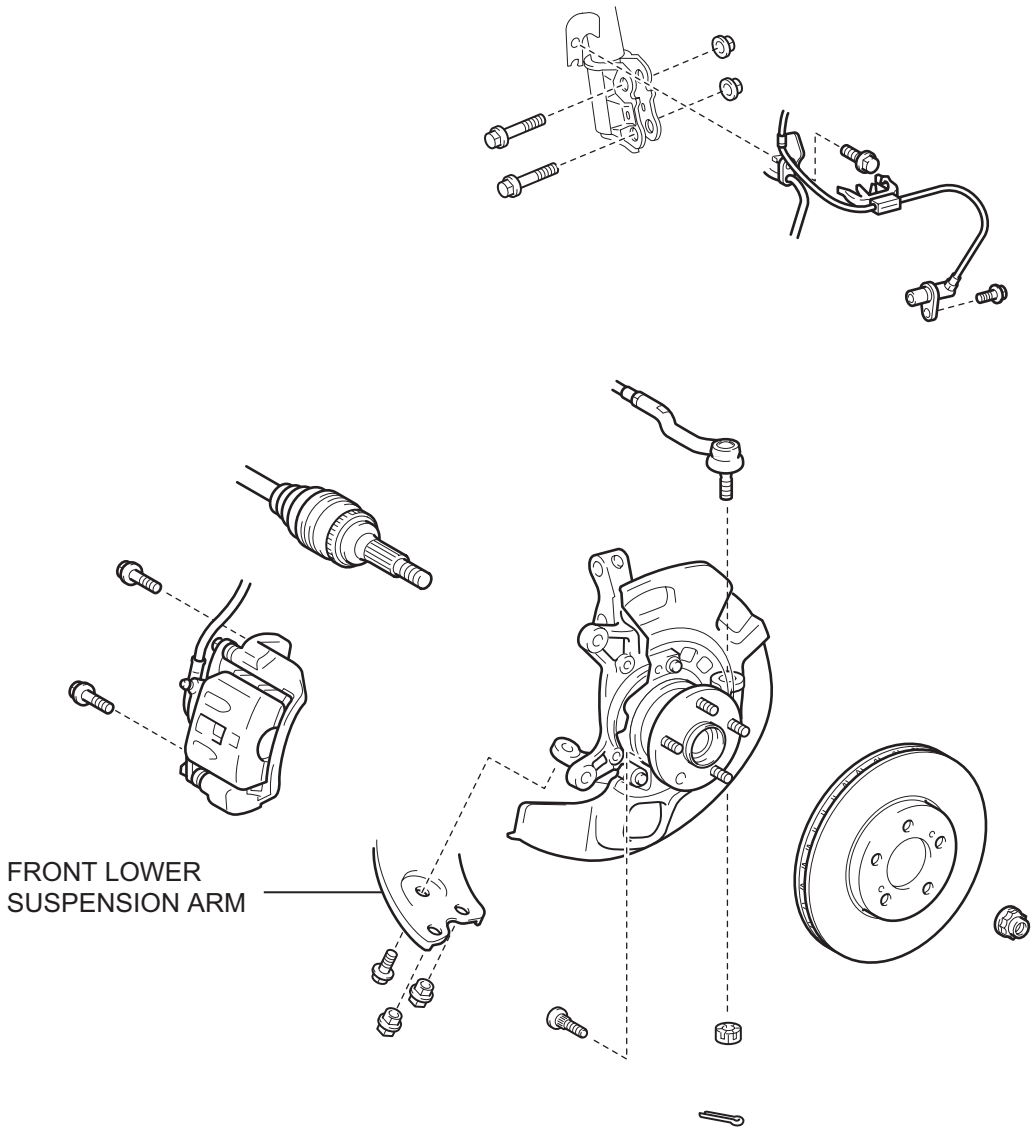

T

C114948E01

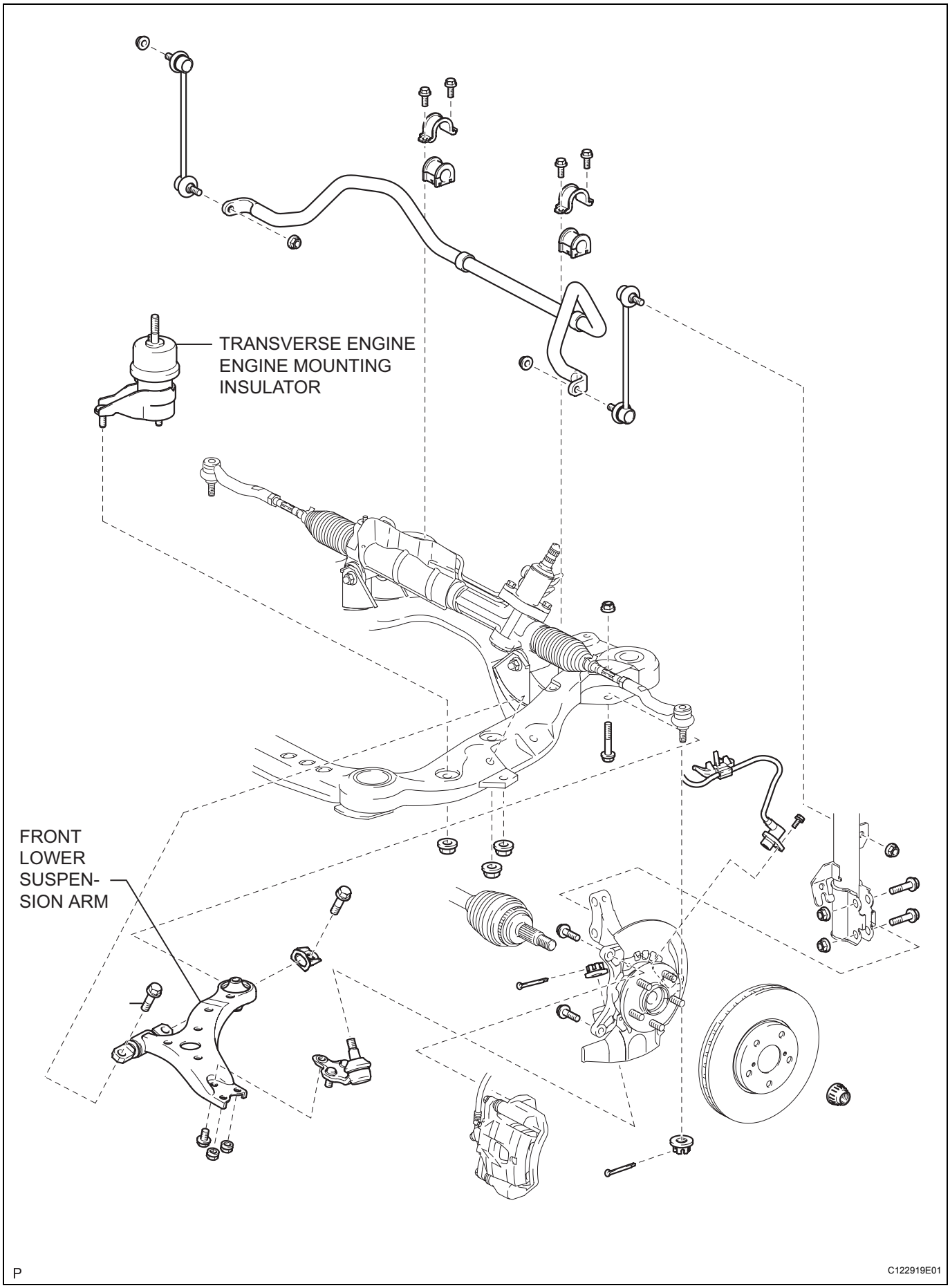
TRANSVERSE ENGINE
ENGINE MOUNTING
INSULATOR
FRONT
LOWER
SUSPEN-
SION ARM
P
C122919E01

REMOVAL

HINT:
- Use the same procedures for the RH side and LH side.
- The procedures listed below are for the LH side.

1. REMOVE ENGINE ASSEMBLY WITH TRANSAXLE

(a) Remove the engine assembly with transaxle (See page EM-27).

2. REMOVE TRANSVERSE ENGINE ENGINE MOUNTING INSULATOR

(a) Remove the 3 nuts and transverse engine mounting insulator.

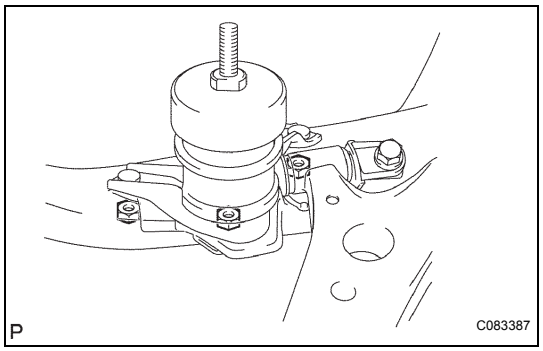

3. REMOVE FRONT LOWER SUSPENSION ARM

(a) Remove the 2 bolts on the front side of the front suspension arm sub-assembly lower No. 1 LH.

(b) Remove the bolt and nut on the rear side of the front suspension arm sub-assembly lower No. 1 LH.

(c) Remove the front suspension arm sub-assembly lower No. 1 LH.

(d) Remove the front lower arm bush stopper from the front suspension arm sub-assembly lower No. 1 LH.

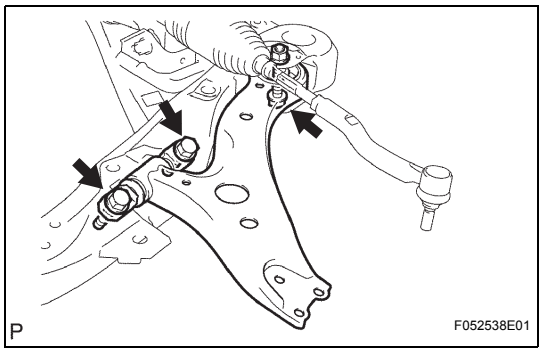

INSTALLATION

1. INSTALL FRONT LOWER SUSPENSION ARM

(a) Install the front lower arm bush stopper to the front suspension arm sub-assembly lower No. 1 LH.

(b) Install the 2 bolts on the front side of the front suspension arm sub-assembly lower No. 1 LH.
Torque: 200 N*m (2,040 kgf*cm, 148 ft.*lbf) bolt (A)

(c) Install the bolt and nut on the rear side of the front suspension arm sub-assembly lower No. 1 LH.
Torque: 206 N*m (2,100 kgf*cm, 152 ft.*lbf) bolt (B)

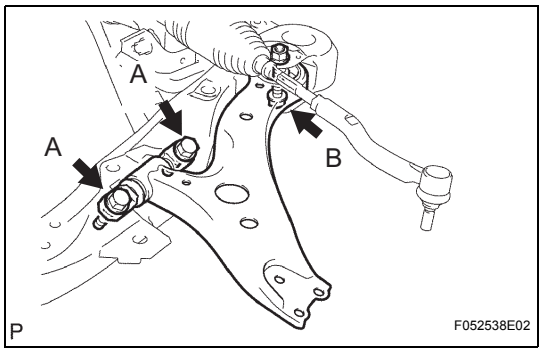

2. INSTALL TRANSVERSE ENGINE ENGINE MOUNTING INSULATOR

(a) Install the transverse engine mounting insulator with the 3 nuts.

3. INSTALL ENGINE ASSEMBLY WITH TRANSAXLE

(a) Install the engine assembly with transaxle (See page EM-37).

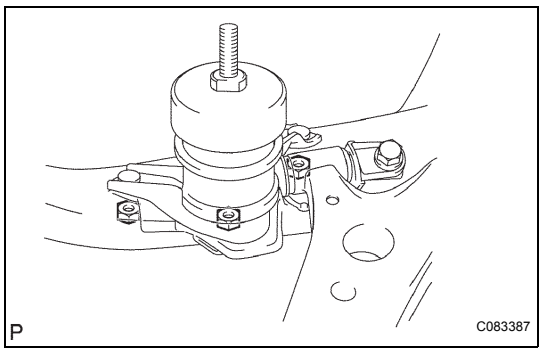

SP

FRONT LOWER BALL JOINT

COMPONENTS

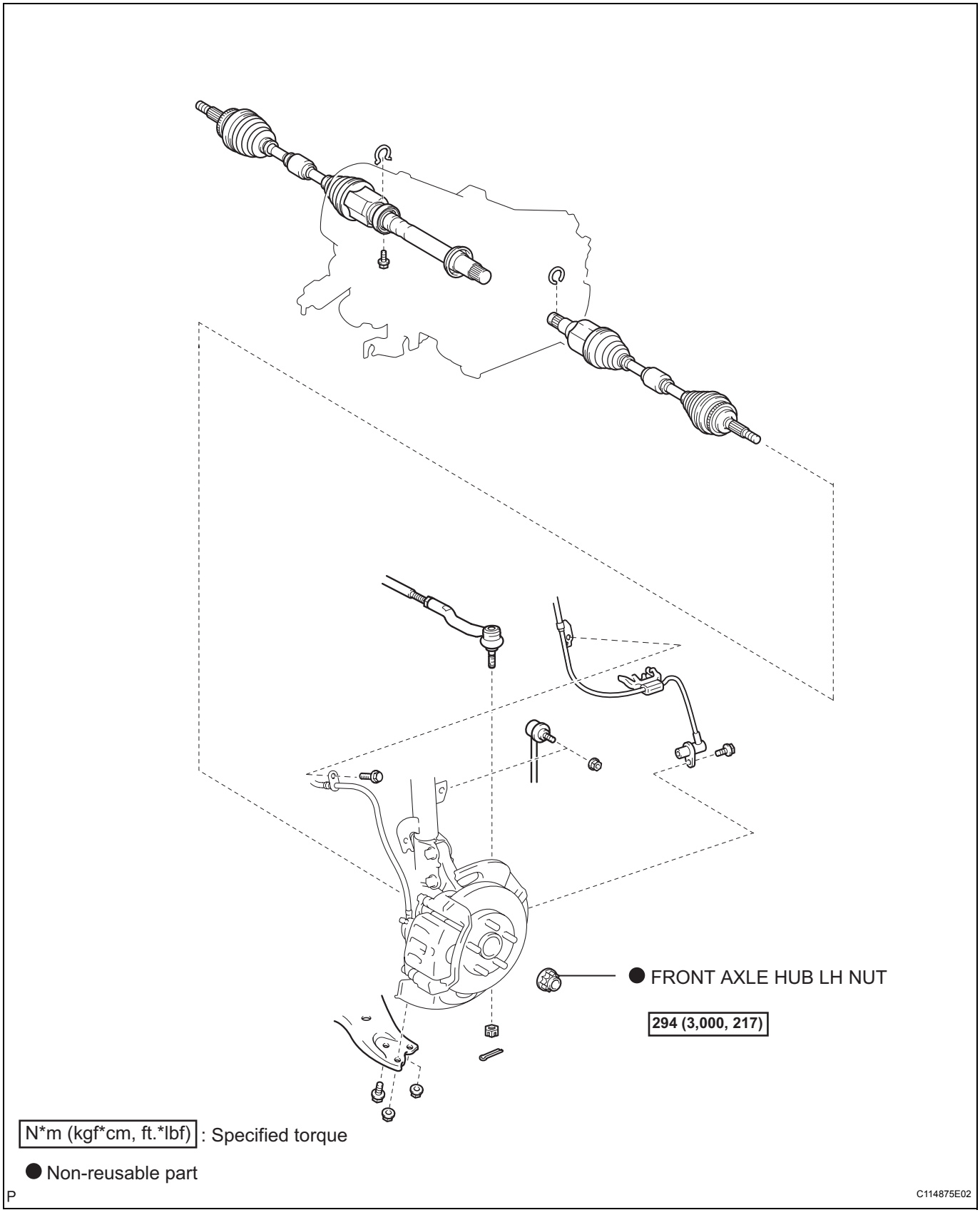

SP

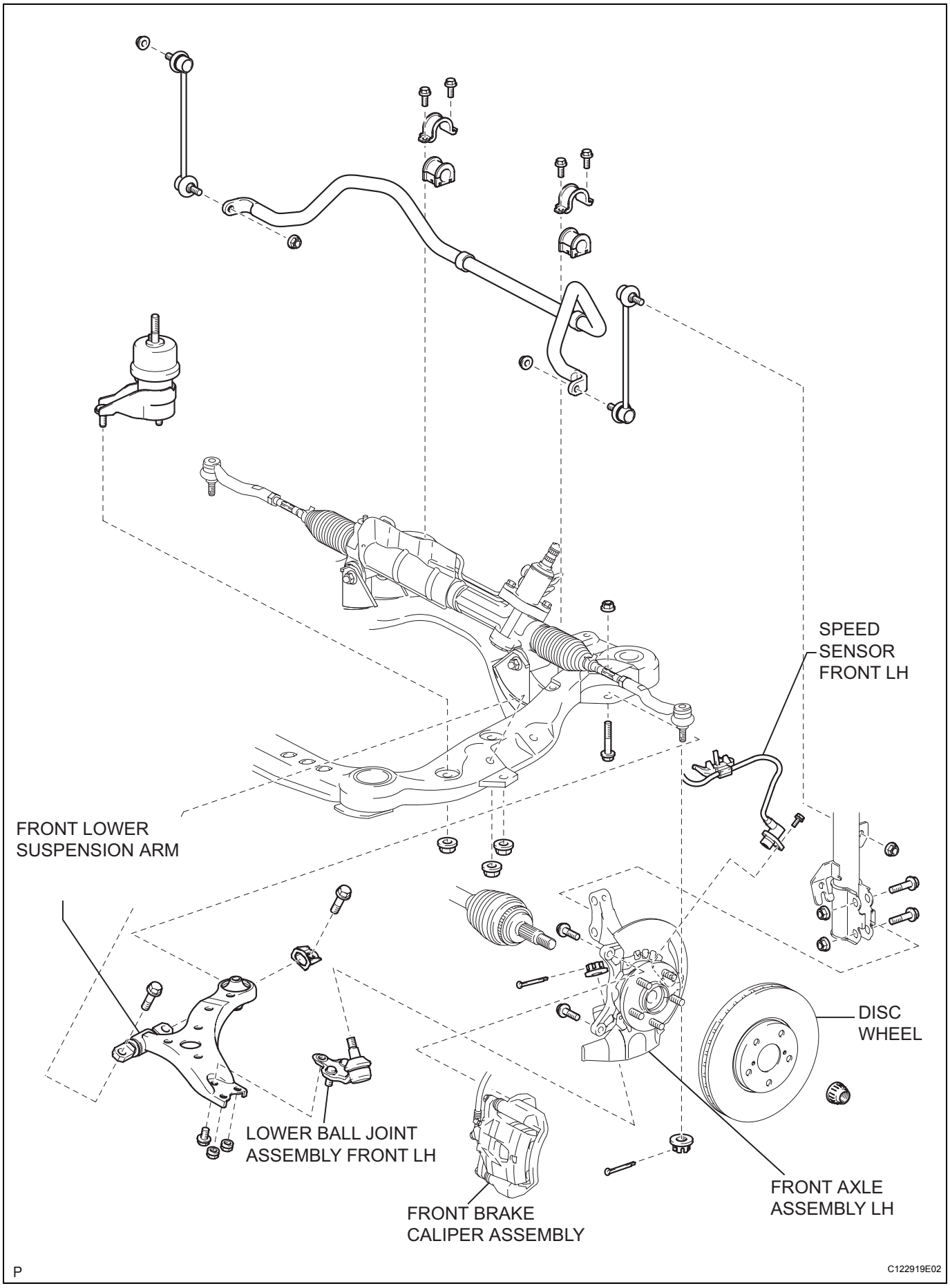
SPEED
SENSOR
FRONT LH
FRONT LOWER
SUSPENSION ARM
DISC
WHEEL
LOWER BALL JOINT
ASSEMBLY FRONT LH
FRONT BRAKE
CALIPER ASSEMBLY
FRONT AXLE
ASSEMBLY LH
P
C122919E02

SP

REMOVAL

HINT:
- Use the same procedures for the RH side and LH side.
- The procedures listed below are for the LH side.

1. **REMOVE FRONT WHEEL**
2. **REMOVE FRONT AXLE HUB LH NUT**
   (a) Remove the front axle hub LH nut (See page DS-5).
   SST 09930-00010
3. **SEPARATE SPEED SENSOR FRONT LH**
   (a) Separate the speed sensor front LH (See page DS-5).
4. **SEPARATE FRONT DISC BRAKE CALIPER ASSEMBLY LH**
   (a) Separate the front disc the brake caliper assembly LH (See page BR-25).
5. **REMOVE DISC WHEEL**
6. **SEPARATE TIE ROD ASSEMBLY LH**
   (a) Separate the tie rod assembly LH (See page DS-5).
   SST 09628-62011
7. **SEPARATE FRONT LOWER SUSPENSION ARM**
   (a) Separate the front lower suspension arm (See page SP-21).
8. **REMOVE FRONT AXLE ASSEMBLY LH**
   (a) Remove the front axle assembly LH (See page AH-6).
9. **REMOVE LOWER BALL JOINT ASSEMBLY FRONT LH**
   (a) Remove the cotter pin and castle nut.
   (b) Using SST, remove the lower ball joint assembly front LH.
   SST 09628-62011

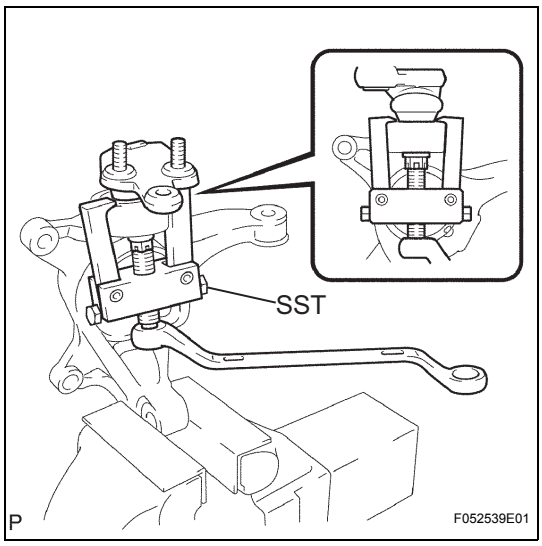

SP

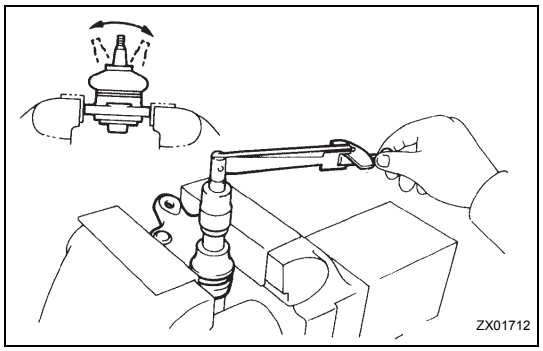

INSPECTION

1. INSPECT LOWER BALL JOINT ASSEMBLY FRONT LH

(a) Secure the lower ball joint assembly front LH in a vise.
(b) Install the nut to the stud bolt.
(c) Flip the ball joint back and forth 5 times or more.
(d) Use a torque wrench to turn the nut continuously at a rate of 3 to 5 seconds per 1 turn. Take the torque reading on the 5th turn.

Torque: Turning torque
0.98 to 3.43 N*m (10 to 35 kgf*cm, 8.7 to 30 in.*lbf)

If the value is not within the specification, replace the lower ball joint assembly with a new one.

INSTALLATION

1. **INSTALL LOWER BALL JOINT ASSEMBLY FRONT LH**
   (a) Install the lower ball joint assembly front LH to the steering knuckle with the castle nut.
   Torque: 123 N*m (1,250 kgf*cm, 91 ft.*lbf)
   (b) Install a new cotter pin to the steering knuckle.
   NOTICE:
   Further tighten the nut up to 60° if the holes for the cotter pin are not aligned.
2. **INSTALL FRONT AXLE ASSEMBLY LH**
   (a) Install the front axle assembly LH (See page AH-10).
3. **INSTALL FRONT LOWER SUSPENSION ARM**
   (a) Install the front lower suspension arm (See page SP-21).
4. **INSTALL TIE ROD ASSEMBLY LH**
   (a) Install the tie rod assembly LH (See page DS-13).
5. **INSTALL DISC WHEEL**
6. **INSTALL FRONT DISC BRAKE CALIPER ASSEMBLY LH**
   (a) Install the front disc brake caliper assembly LH (See page BR-29).
7. **INSTALL SPEED SENSOR FRONT LH**
   (a) Install the speed sensor front LH (See page DS-13).
8. **INSTALL FRONT AXLE HUB LH NUT**
   (a) Install the front axle hub LH nut (See page DS-13).
9. **INSTALL FRONT WHEEL**
   Torque: 103 N*m (1,050 kgf*cm, 76 ft.*lbf)
10. **INSPECT AND ADJUST FRONT WHEEL ALIGNMENT**
    (a) Inspect and adjust the front wheel alignment (See page SP-4).
11. **INSPECT ABS SPEED SENSOR SIGNAL**
    with VSC (See page BC-107)
    without VSC (See page BC-11)

FRONT STABILIZER BAR

COMPONENTS

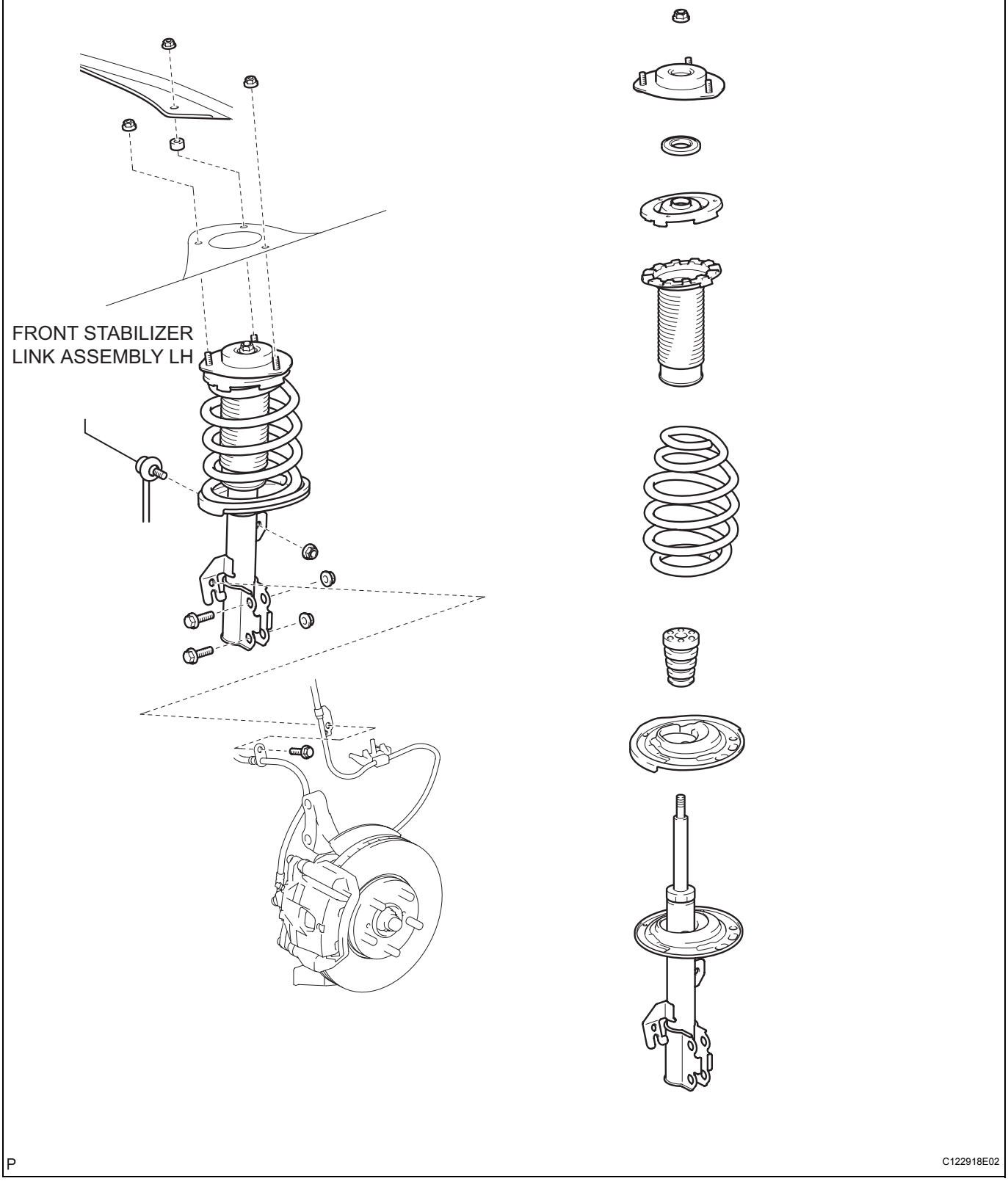

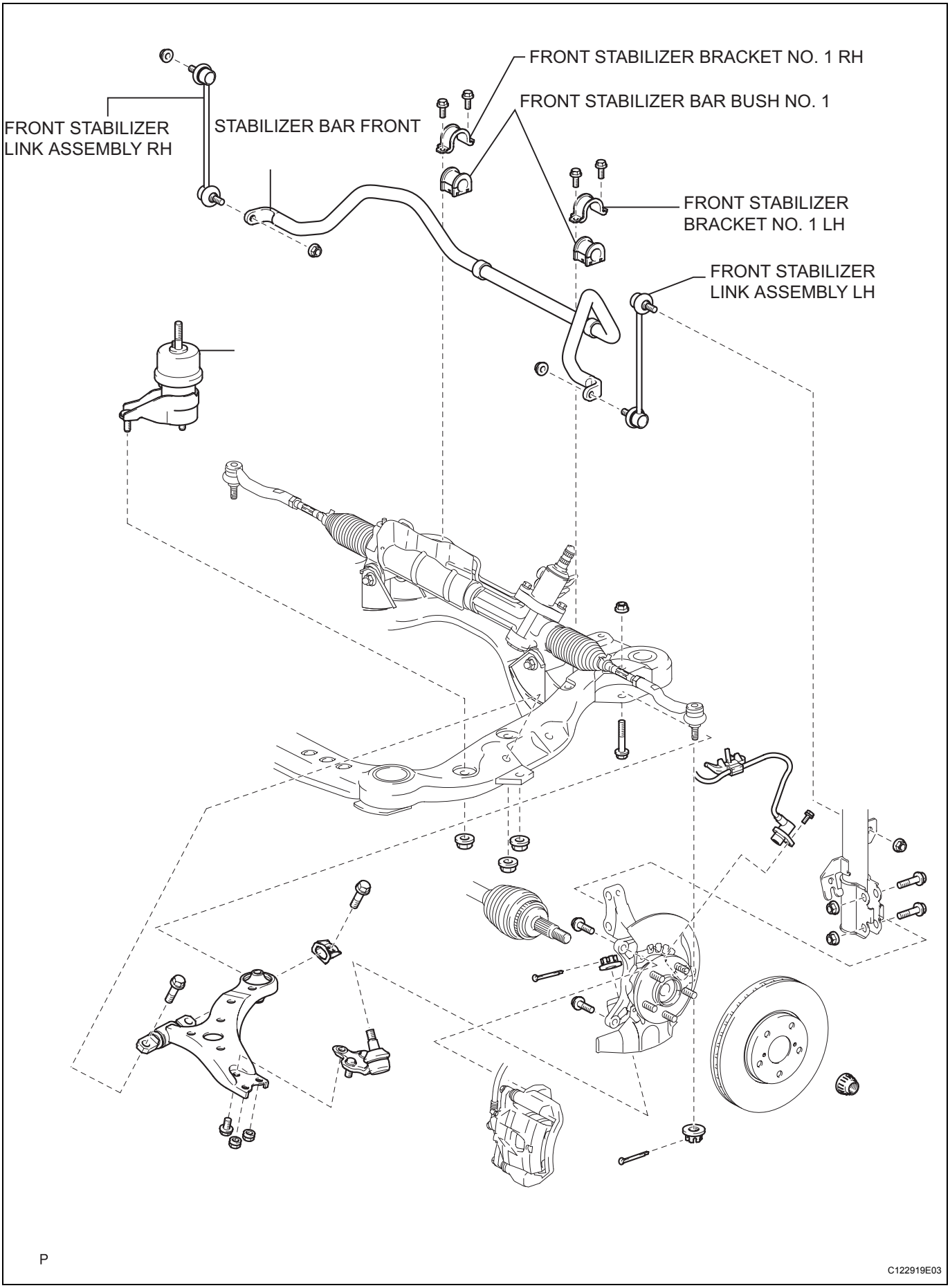
FRONT STABILIZER BRACKET NO. 1 RH
FRONT STABILIZER BAR BUSH NO. 1
FRONT STABILIZER LINK ASSEMBLY RH
STABILIZER BAR FRONT
FRONT STABILIZER BRACKET NO. 1 LH
FRONT STABILIZER LINK ASSEMBLY LH
P
C122919E03

SP

REMOVAL

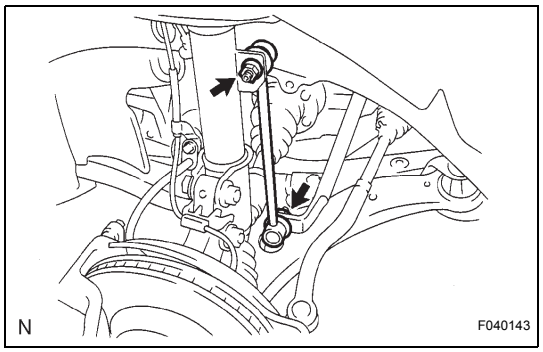

1. **REMOVE FRONT WHEEL**
2. **REMOVE FRONT STABILIZER LINK ASSEMBLY LH**
   (a) Remove the 2 nuts and front stabilizer link assembly LH.
   HINT:
   Use a hexagon (6 mm) wrench to hold the stud if the ball joint turns together with the nut.
3. **REMOVE FRONT STABILIZER LINK ASSEMBLY RH**
   HINT:
   Remove the RH side following the same procedures as with the LH side.
4. **REMOVE ENGINE ASSEMBLY WITH TRANSAXLE**
   (a) Remove the engine assembly with transaxle (See page EM-27).

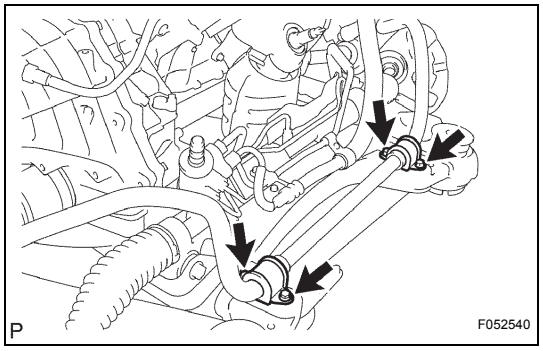

5. **REMOVE FRONT STABILIZER BRACKET NO. 1 LH**
   (a) Remove the 2 bolts and stabilizer bracket No. 1 LH.
6. **REMOVE FRONT STABILIZER BRACKET NO. 1 RH**
   HINT:
   Remove the RH side following the same procedures as with the LH side.
7. **REMOVE FRONT STABILIZER BAR BUSH NO. 1**
   (a) Remove the 2 bushes from the stabilizer.
8. **REMOVE STABILIZER BAR FRONT**
   (a) Remove the stabilizer bar front from the vehicle.

INSPECTION

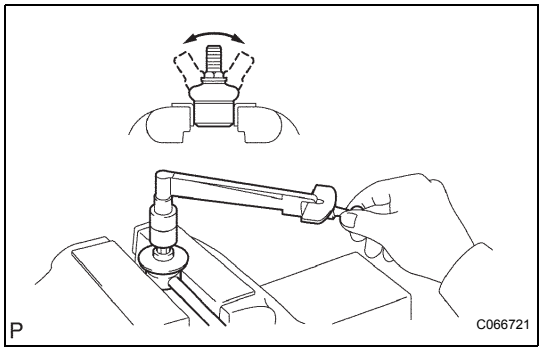

1. **INSPECT FRONT STABILIZER LINK ASSEMBLY**
   (a) Secure the front stabilizer link assembly LH in a vise.
   (b) Install the nut to the stud bolt.
   (c) Flip the ball joint back and forth 5 times or more.
   (d) Use a torque wrench to turn the nut continuously at a rate of 2 to 4 seconds per 1 turn. Take the torque reading on the 5th turn.
   Torque: Turning torque
   0.05 to 1.96 N*m (0.5 to 20 kgf*cm, 0.4 to 17.4 in.*lbf)
   If the value is not within the specification, replace the front stabilizer link assembly with a new one.

SP

INSTALLATION

1. INSTALL STABILIZER BAR FRONT

(a) Install the stabilizer bar front to the vehicle.

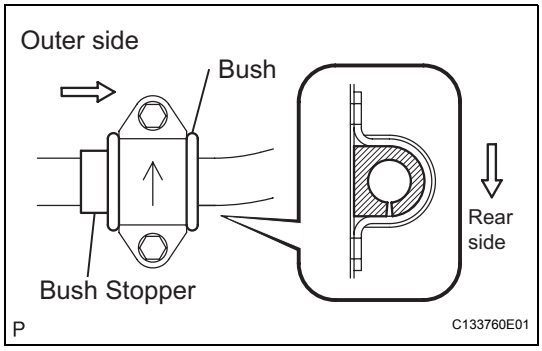

2. INSTALL FRONT STABILIZER BAR BUSH NO. 1

HINT:

- Install the bushes as to the outer side of the each bush stopper on the stabilizer bar.
- Place the cutout of the stabilizer bushes as facing the rear side as shown in the illustration.

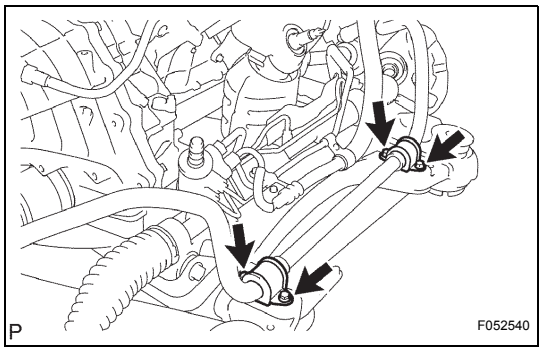

3. INSTALL FRONT STABILIZER BRACKET NO. 1 LH

(a) Install the front stabilizer bracket No. 1 LH with the 2 bolts.

Torque: 19 N*m (194 kgf*cm, 14 ft.*lbf)

4. INSTALL FRONT STABILIZER BRACKET NO. 1 RH

HINT:

Install the RH side following the same procedures as with the LH side.

5. INSTALL ENGINE ASSEMBLY WITH TRANSAXLE

(a) Install the engine assembly with transaxle (See page EM-37).

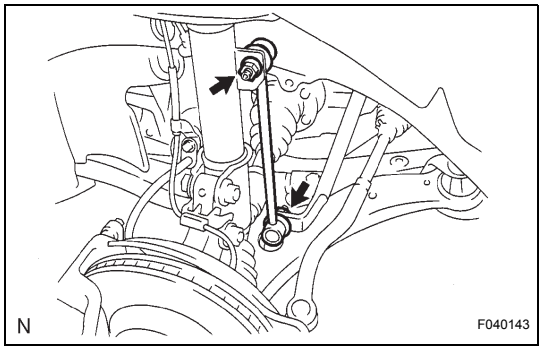

6. INSTALL FRONT STABILIZER LINK ASSEMBLY LH

(a) Install the front stabilizer link assembly LH with the 2 nuts.

Torque: 74 N*m (755 kgf*cm, 55 ft.*lbf)

HINT:

Use a hexagon (6 mm) wrench to hold the stud if the ball joint turns together with the nut.

7. INSTALL FRONT STABILIZER LINK ASSEMBLY RH

HINT:

Install the RH side following the same procedures as with the LH side.

8. INSTALL FRONT WHEEL

Torque: 103 N*m (1,050 kgf*cm, 76 ft.*lbf)

9. BLEED POWER STEERING FLUID

(a) Bleed the power steering fluid (See page PS-3).

10. INSPECT AND ADJUST FRONT WHEEL ALIGNMENT

(a) Inspect and adjust the front wheel alignment (See page SP-4).

SP

REAR SHOCK ABSORBER WITH COIL SPRING

COMPONENTS

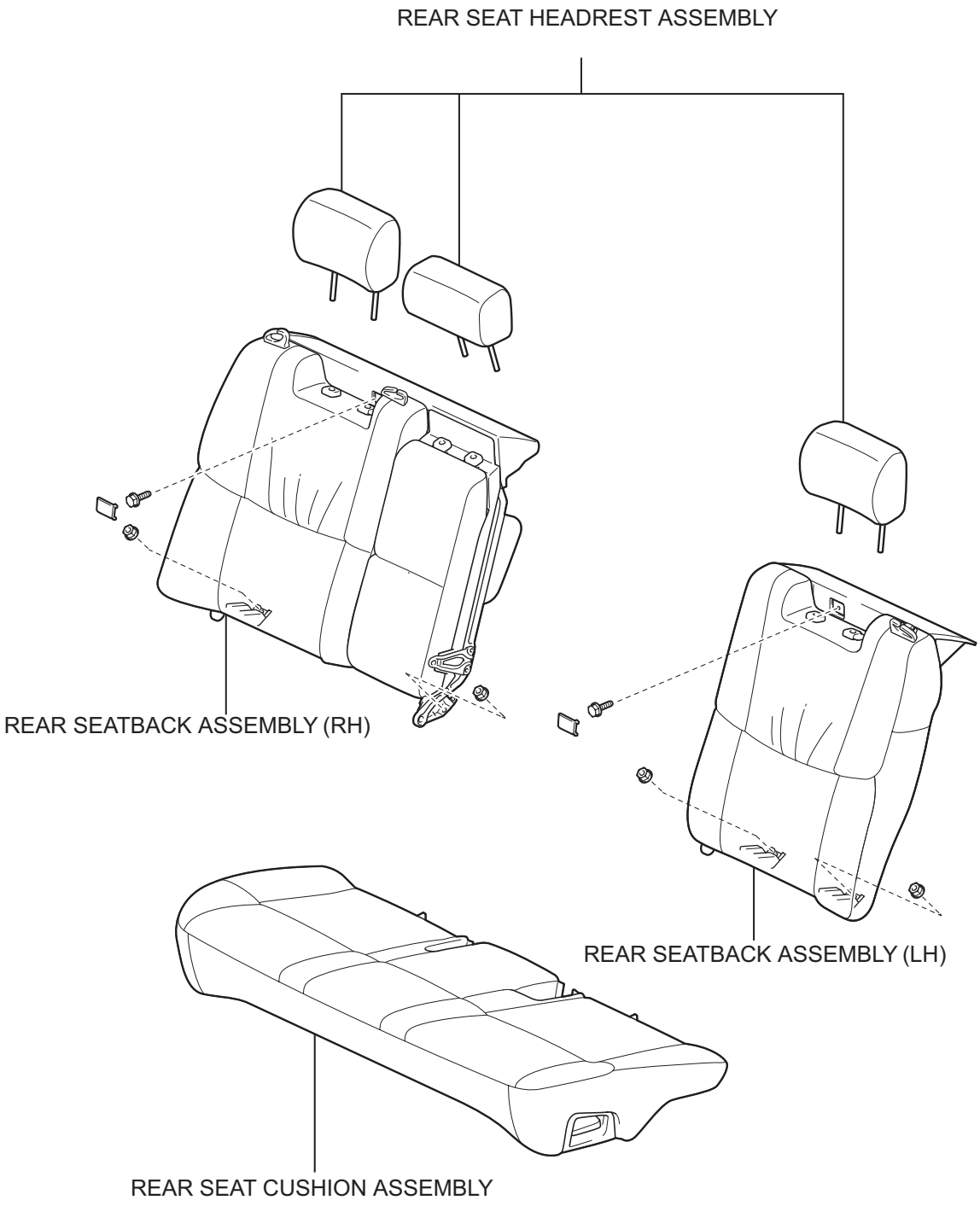

SP

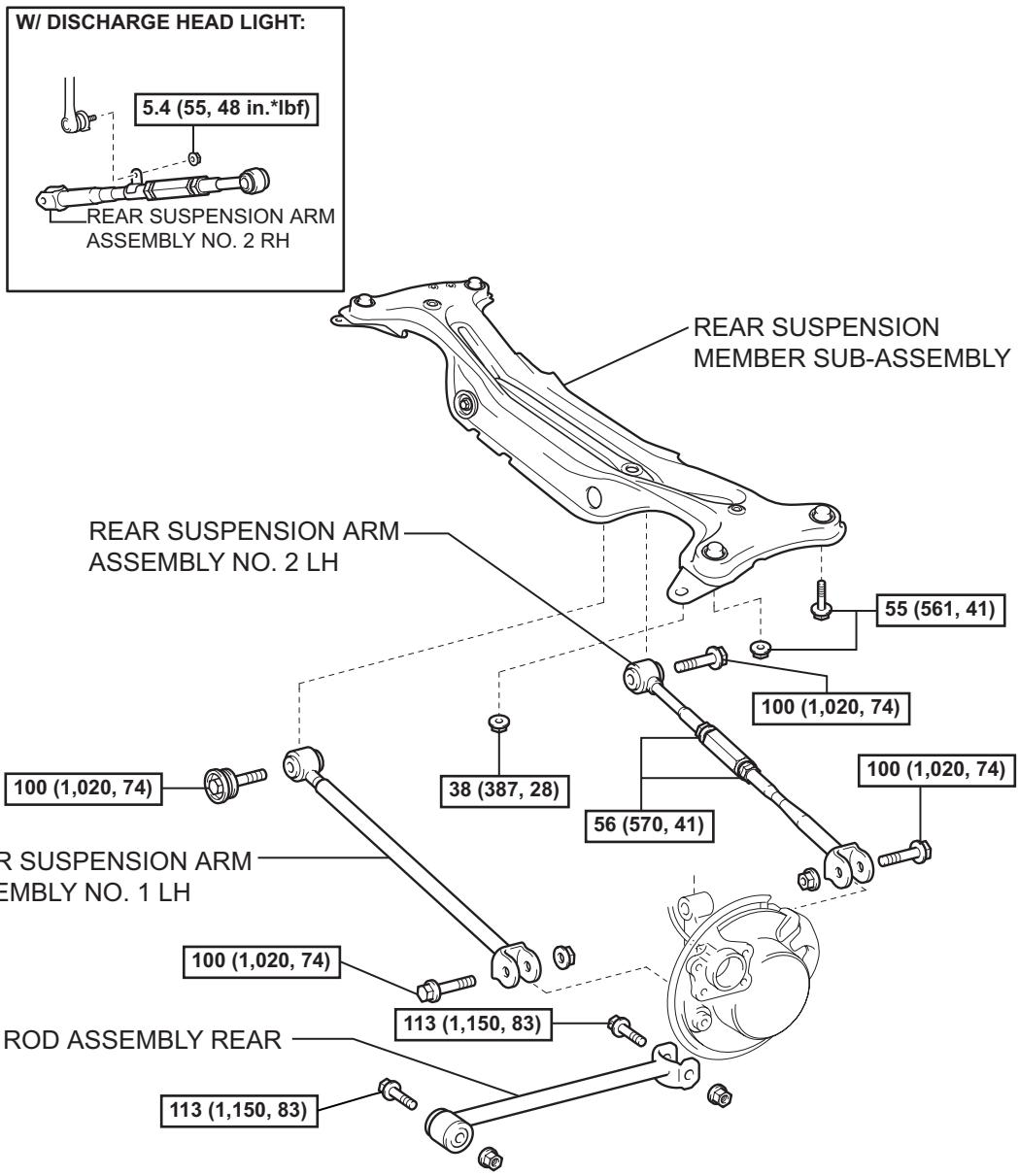

SP

N*m (kgf*cm, ft.*lbf) : Specified torque

● Non-reusable part

P

C114959E01

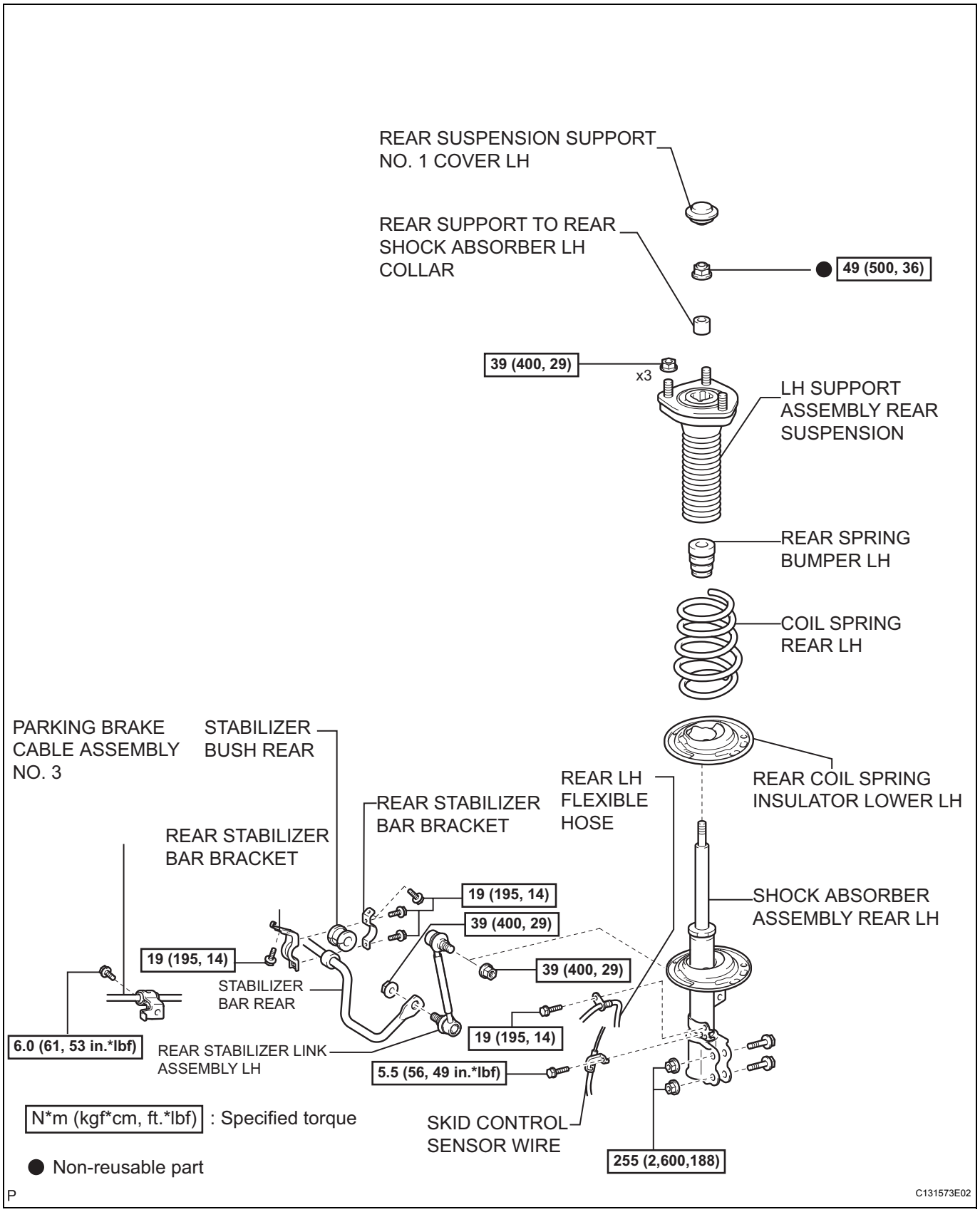
REAR SUSPENSION SUPPORT NO. 1 COVER LH
REAR SUPPORT TO REAR SHOCK ABSORBER LH COLLAR
● 49 (500, 36)
39 (400, 29)
x3
LH SUPPORT ASSEMBLY REAR SUSPENSION
REAR SPRING BUMPER LH
COIL SPRING REAR LH
PARKING BRAKE CABLE ASSEMBLY NO. 3
STABILIZER BUSH REAR
REAR LH FLEXIBLE HOSE
REAR COIL SPRING INSULATOR LOWER LH
REAR STABILIZER BAR BRACKET
REAR STABILIZER BAR BRACKET
SHOCK ABSORBER ASSEMBLY REAR LH
19 (195, 14)
39 (400, 29)
19 (195, 14)
STABILIZER BAR REAR
39 (400, 29)
6.0 (61, 53 in.*lbf)
REAR STABILIZER LINK ASSEMBLY LH
19 (195, 14)
5.5 (56, 49 in.*lbf)
N*m (kgf*cm, ft.*lbf) : Specified torque
● Non-reusable part
SKID CONTROL SENSOR WIRE
255 (2,600,188)
P
C131573E02

SP

REMOVAL

HINT:
- Use the same procedures for the RH side and LH side.
- The procedures listed below are for the LH side.

1. REMOVE REAR SEAT CUSHION ASSEMBLY
(a) Remove the rear seat cushion assembly (See page SE-68).

2. REMOVE REAR SEAT HEADREST PLATE COVER LH

3. REMOVE REAR SEAT HEADREST ASSEMBLY

4. REMOVE REAR SEATBACK ASSEMBLY
(a) Remove the rear seatback assembly (See page SE-68).

5. REMOVE REAR WHEEL

6. SEPARATE REAR STABILIZER LINK ASSEMBLY LH
(a) Support the rear axle carrier with a jack.

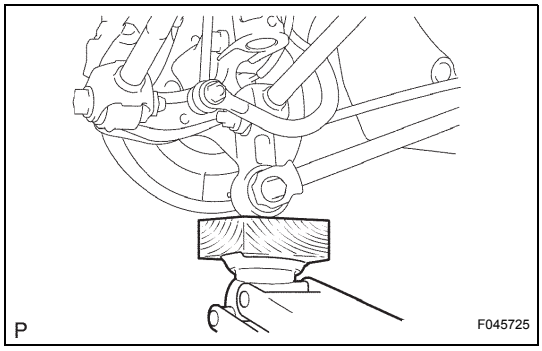

(b) Remove the nut, and disconnect the stabilizer link from the shock absorber.
HINT:
If the ball joint turns together with the nut, use a hexagon wrench (5 mm) to hold the stud.

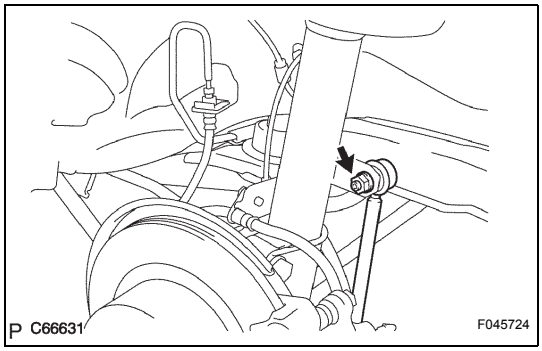

7. DISCONNECT FLEXIBLE HOSE
(a) Remove the 2 bolts, and disconnect the flexible hose and skid control sensor wire from the shock absorber.

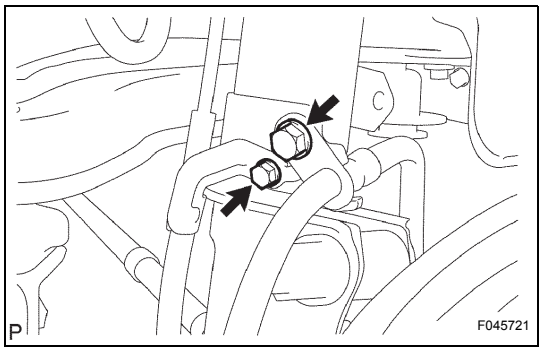

SP

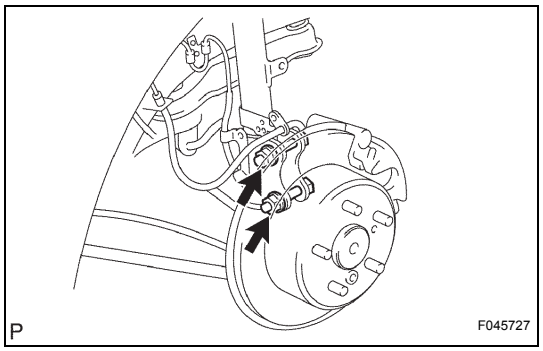

8. REMOVE REAR SHOCK ABSORBER WITH COIL SPRING

(a) Loosen the 2 nuts on the lower side of the shock absorber.
HINT:
Do not remove the 2 bolts and 2 nuts.

(b) Remove the rear suspension support No. 1 cover LH.

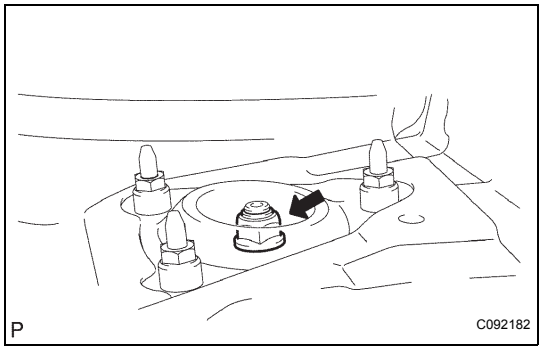

(c) Loosen the LH support suspension center nut.
NOTICE:
Do not remove the nut.
HINT:
It is not necessary to loosen the nut if the shock absorber is not being disassembled.

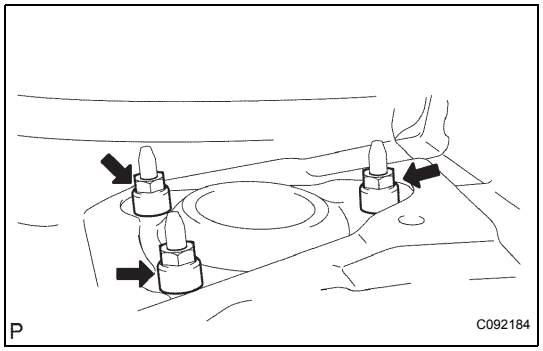

(d) Remove the 3 nuts.

(e) Lower the rear axle carrier, and remove the 2 nuts and 2 bolts on the lower side of the shock absorber.

(f) Remove the shock absorber with coil spring.

DISASSEMBLY

1. FIX REAR SHOCK ABSORBER WITH COIL SPRING

(a) Install the 2 nuts and bolt to the bracket at the lower part of the shock absorber, and secure it in a vise as shown in the illustration to the left.

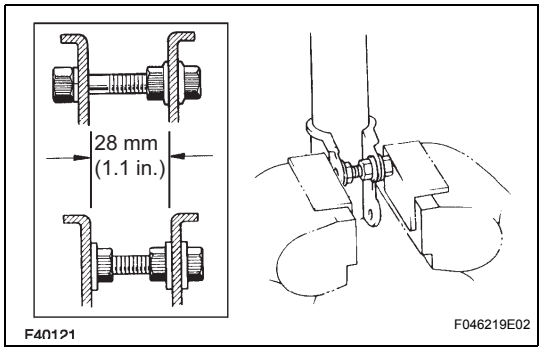

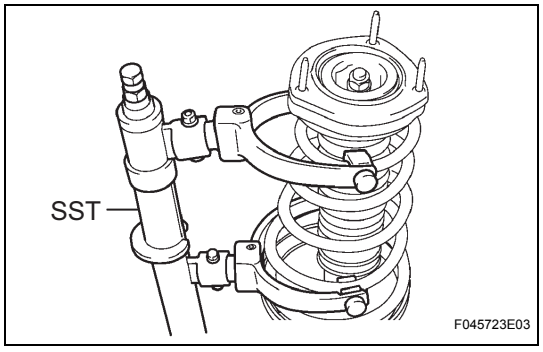

2. REMOVE REAR SHOCK ABSORBER

(a) Using SST, compress the coil spring.
SST 09727-30021
NOTICE:
Do not use an impact wrench. It will damage the SST.

(b) Remove the nut, collar and LH support suspension.

(c) Remove the coil spring, spring bumper and insulator lower.

SP

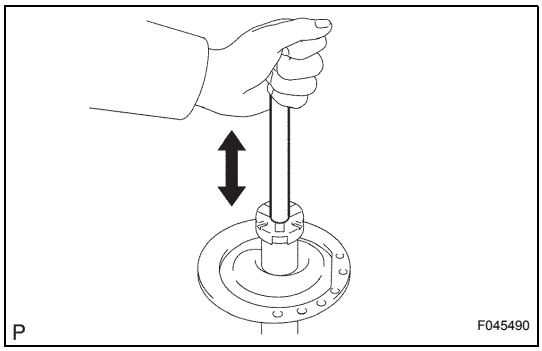

INSPECTION

1. INSPECT REAR SHOCK ABSORBER

(a) Compress and extend the shock absorber rod, and check that there is no abnormal resistance or unusual sound.
If there is any abnormality, replace the shock absorber with a new one.
NOTICE:
When disposing of the shock absorber, see DISPOSAL (See page SP-38).

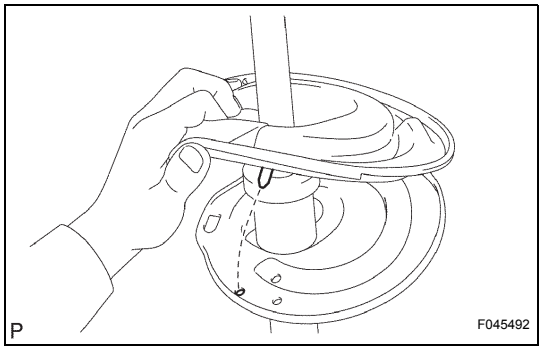

REASSEMBLY

1. INSTALL REAR SHOCK ABSORBER

(a) Install the insulator lower, as shown in the illustration.

(b) Install the spring bumper.

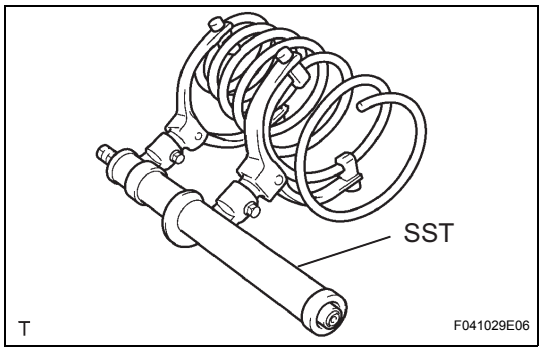

(c) Using SST, compress the coil spring.
NOTICE:
Do not use an impact wrench. It will damage the SST.

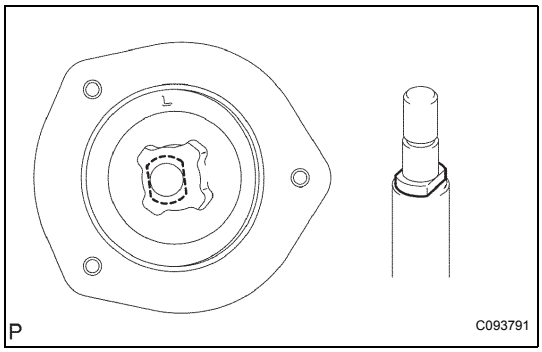

(d) Install the coil spring to the shock absorber.
HINT:
- Fit the lower end of the coil spring into the gap of the lower seat.
- Check that the 2 flat faces of the piston rod are positioned in parallel with the 2 flat faces of the LH support suspension.

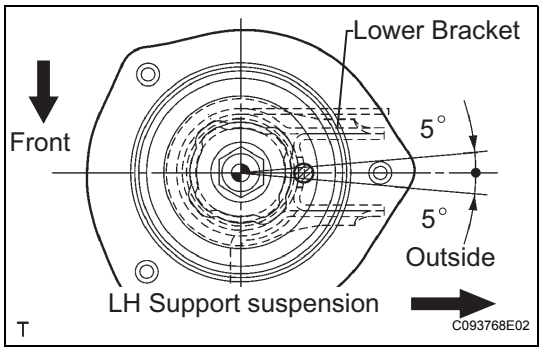

(e) Align the LH support suspension with the shock absorber lower bracket, as shown in the illustration.
HINT:
Set the LH support suspension so that the protruding part of the LH support suspension faces outside.

SP

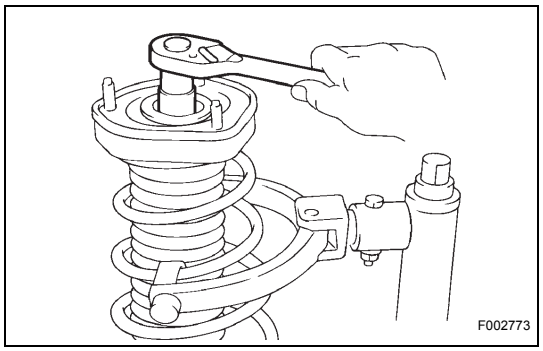

(f) Install the collar to the piston rod.
(g) Temporarily install a new nut.
(h) Remove the SST.
SST 09727-30021
HINT:
After removing the SST, recheck the direction of the LH support suspension.

INSTALLATION

1. INSTALL REAR SHOCK ABSORBER WITH COIL SPRING

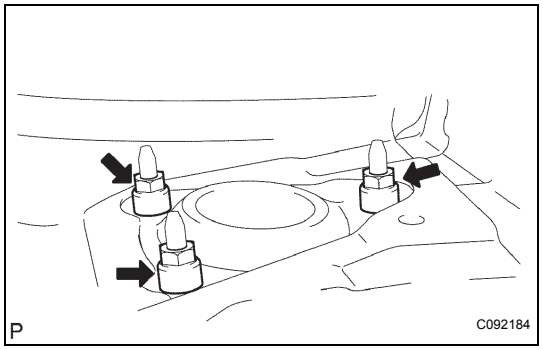

(a) Install the shock absorber with coil spring and tighten the 3 nuts.
Torque: 39 N*m (400 kgf*cm, 29 ft.*lbf)

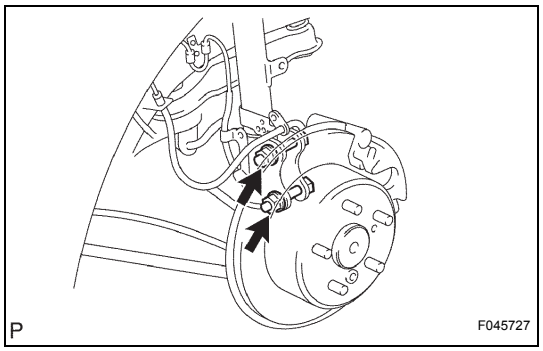

(b) Install the 2 bolts and 2 nuts to the shock absorber with coil spring.
Torque: 255 N*m (2,600 kgf*cm, 188 ft.*lbf)

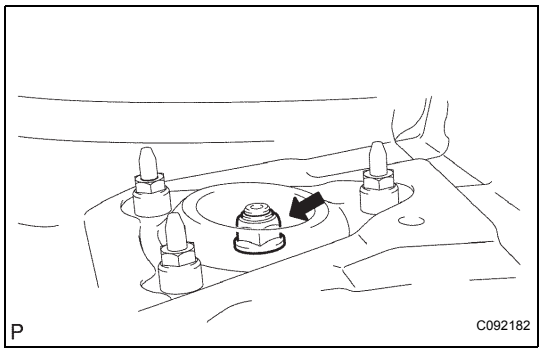

(c) Fully tighten the nut installed on the top of the shock absorber with coil spring.
Torque: 49 N*m (500 kgf*cm, 36 ft.*lbf)
HINT:
If the shock absorber has not been disassembled, it is not necessary to torque the nut.
(d) Install the rear suspension support No. 1 cover LH.

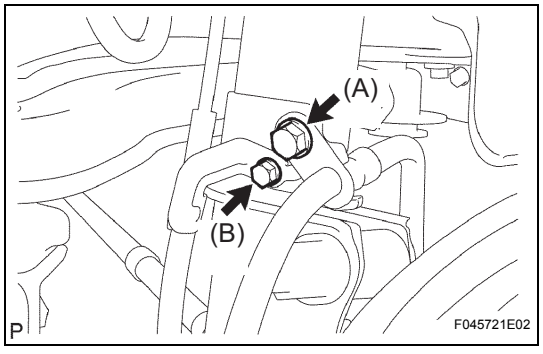

2. INSTALL FLEXIBLE HOSE

(a) Install the flexible hose and skid control sensor wire with the 2 bolts.
Torque: Bolt A
19 N*m (195 kgf*cm, 14 ft.*lbf)
Bolt B
5.5 N*m (56 kgf*cm, 49 in.*lbf)

SP

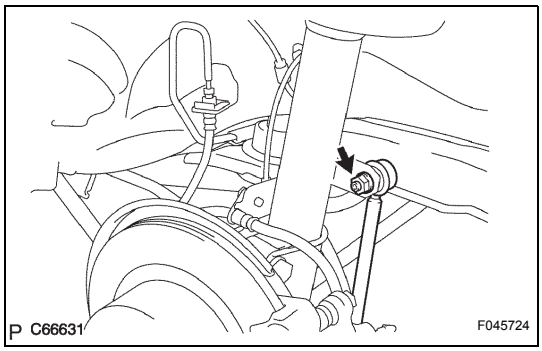

3. **INSTALL REAR STABILIZER LINK ASSEMBLY LH**
   (a) Install the stabilizer link to the shock absorber with the nut.
   Torque: 39 N*m (400 kgf*cm, 29 ft.*lbf)
   HINT:
   If the ball joint turns together with the nut, use a hexagon wrench (5 mm) to hold the stud.

4. **INSTALL REAR WHEEL**
   Torque: 103 N*m (1,050 kgf*cm, 76 ft.*lbf)

5. **INSPECT AND ADJUST REAR WHEEL ALIGNMENT**
   (a) Inspect and adjust the rear wheel alignment (See page SP-11).

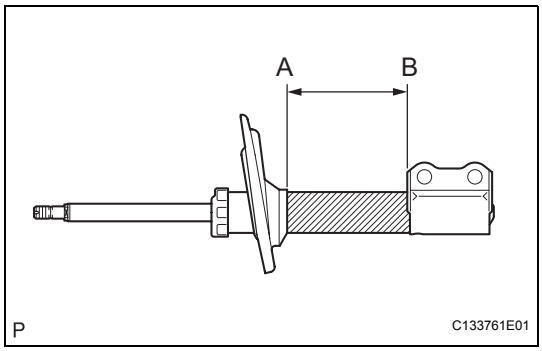

DISPOSAL

1. **DISPOSE OF REAR SHOCK ABSORBER**
   (a) Fully extend the shock absorber rod.
   (b) Using a drill, make a hole in the cylinder somewhere between A and B as shown in the illustration to discharge the gas inside.
   CAUTION:
   - **Be careful when drilling because shards of metal may fly about, so always use the proper safety equipment.**
   - **The gas is colorless, odorless and non-poisonous.**

REAR STRUT ROD

COMPONENTS

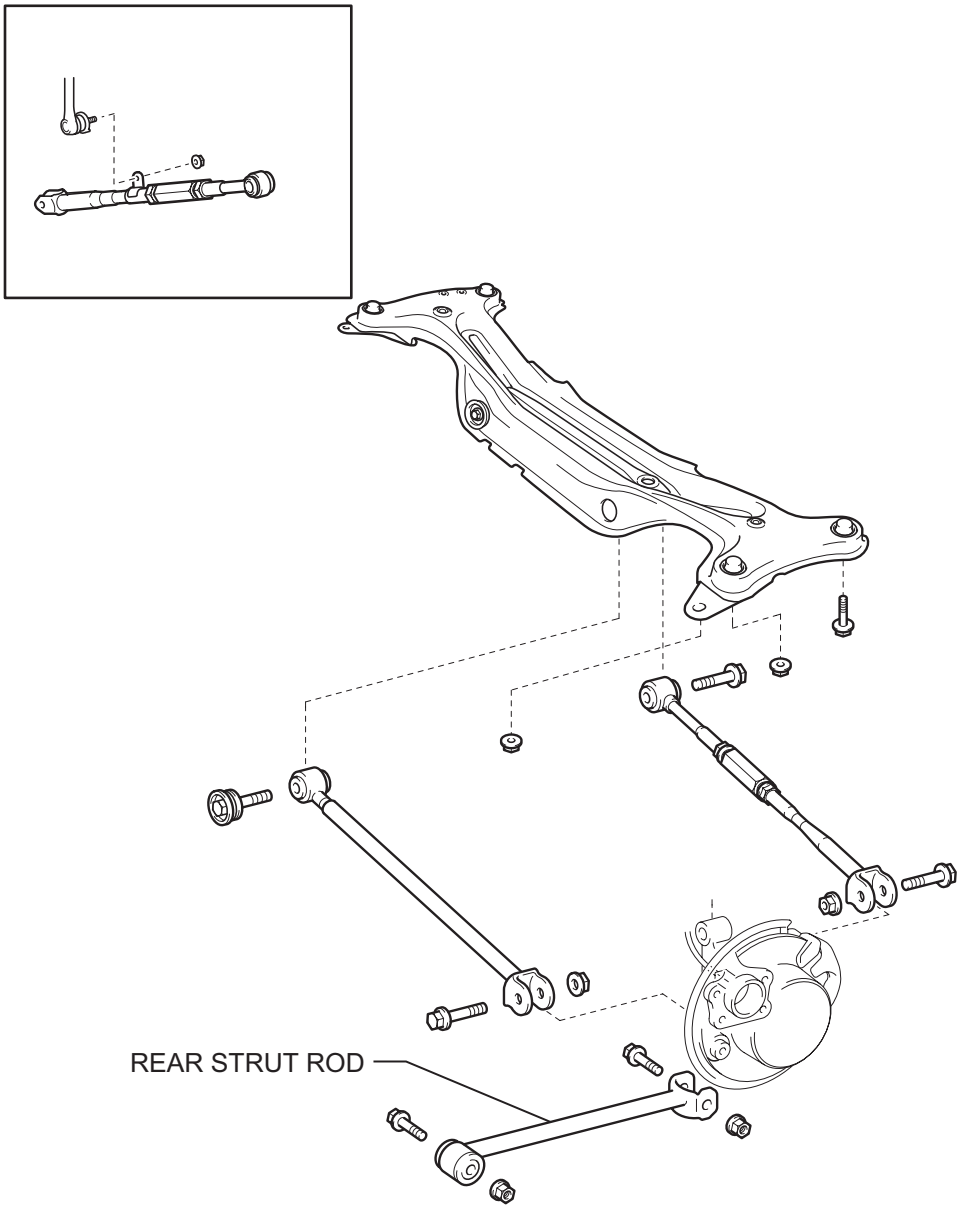

P

C114959E02

REMOVAL

1. REMOVE REAR WHEEL

2. REMOVE REAR STRUT ROD

(a) Remove the bolt and separate the parking brake cable.

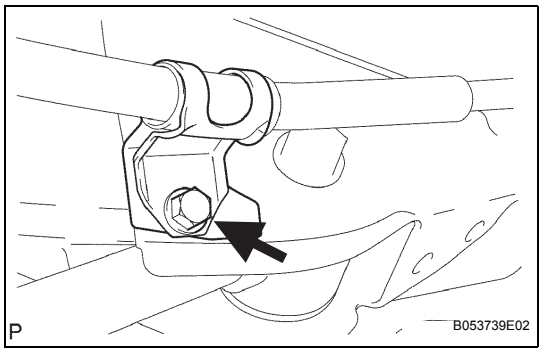

(b) Remove the bolt and nut and disconnect the strut rod (front side).
NOTICE:
When removing the bolt, keep the nut from rotating.

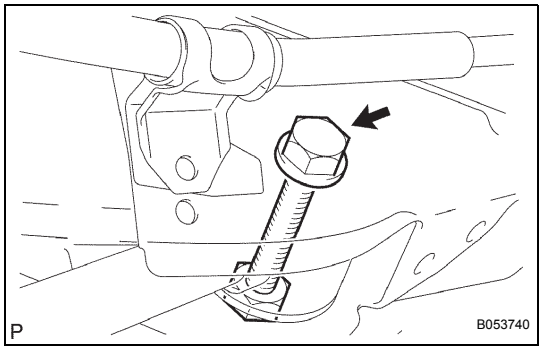

(c) Remove the bolt, nut and strut rod from the rear axle carrier.
NOTICE:
When removing the bolt, keep the nut from rotating.

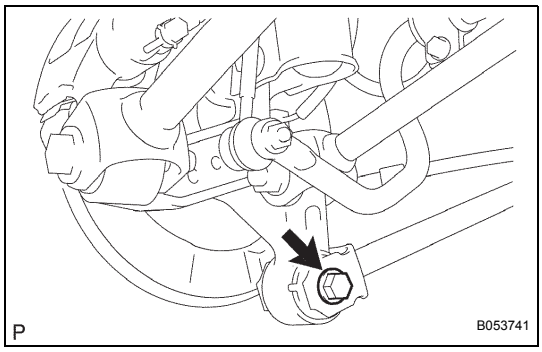

INSTALLATION

1. TEMPORARILY TIGHTEN REAR STRUT ROD

(a) Install the strut rod (rear side), bolt and nut, and temporarily tighten the bolt.
NOTICE:
When installing the bolt, fix the nut and temporarily tighten the bolt.
HINT:
Insert the bolt from the inner side of the vehicle and temporarily install the bolt.

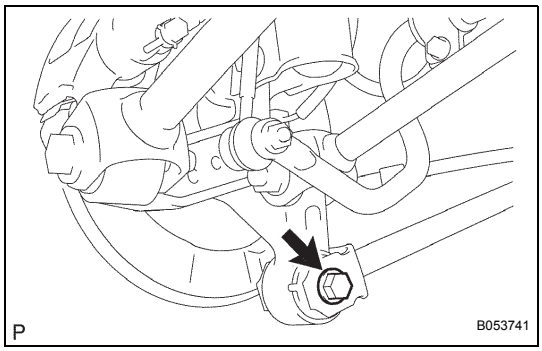

SP

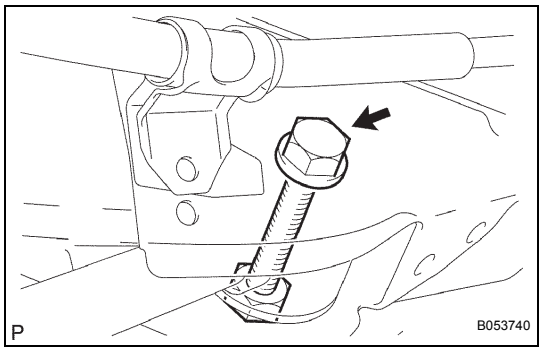

(b) Connect the strut rod (front side) with the bolt and nut.
NOTICE:
When installing the bolt, fix the nut and temporarily tighten the bolt.

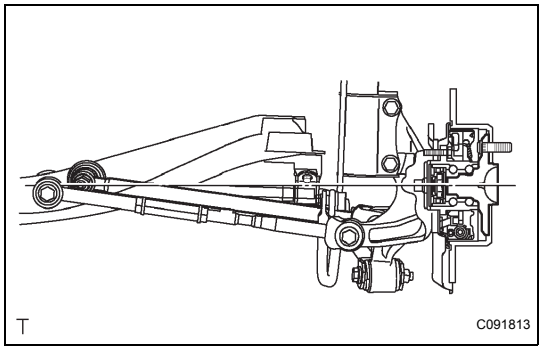

2. STABILIZE SUSPENSION

(a) Jack up the rear axle carrier, placing a wooden block to avoid damage. Apply a load to the suspension so that the installed bolt of the suspension arm assembly No. 1 (inner side of the vehicle) is horizontally aligned with the center of the rear axle hub.

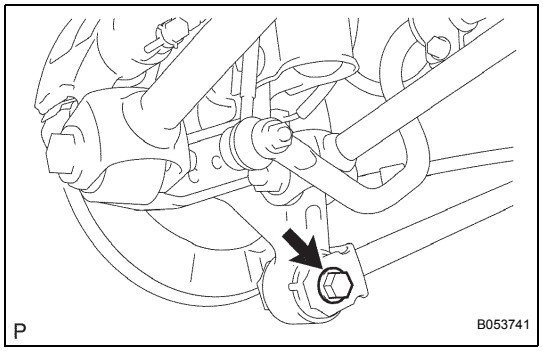

3. FULLY TIGHTEN REAR STRUT ROD

(a) Fully tighten the bolt.
Torque: 113 N*m (1,150 kgf*cm, 83 ft.*lbf)
NOTICE:
When installing the bolt, fix the nut and tighten the bolt.

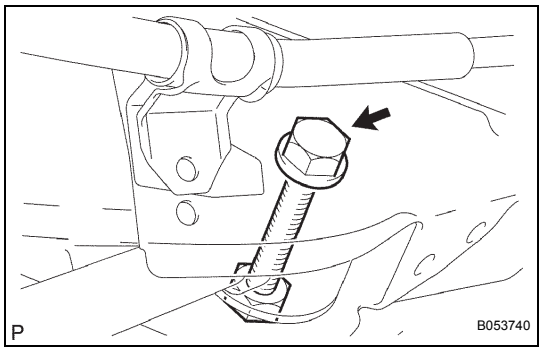

(b) Fully tighten the bolt.
Torque: 113 N*m (1,150 kgf*cm, 83 ft.*lbf)
NOTICE:
When installing the bolt, fix the nut and tighten the bolt.

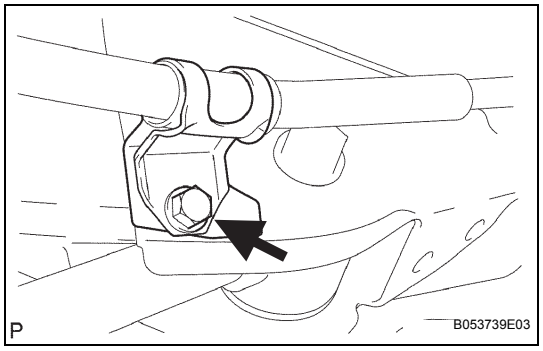

(c) Install the parking brake cable with the bolt.
Torque: 6.0 N*m (61 kgf*cm, 53 in.*lbf)

4. INSTALL REAR WHEEL
Torque: 103 N*m (1,050 kgf*cm, 6 ft.*lbf)

5. INSPECT AND ADJUST REAR WHEEL ALIGNMENT

(a) Inspect and adjust the rear wheel alignment (See page SP-11).

SP

REAR NO. 1 SUSPENSION ARM

COMPONENTS

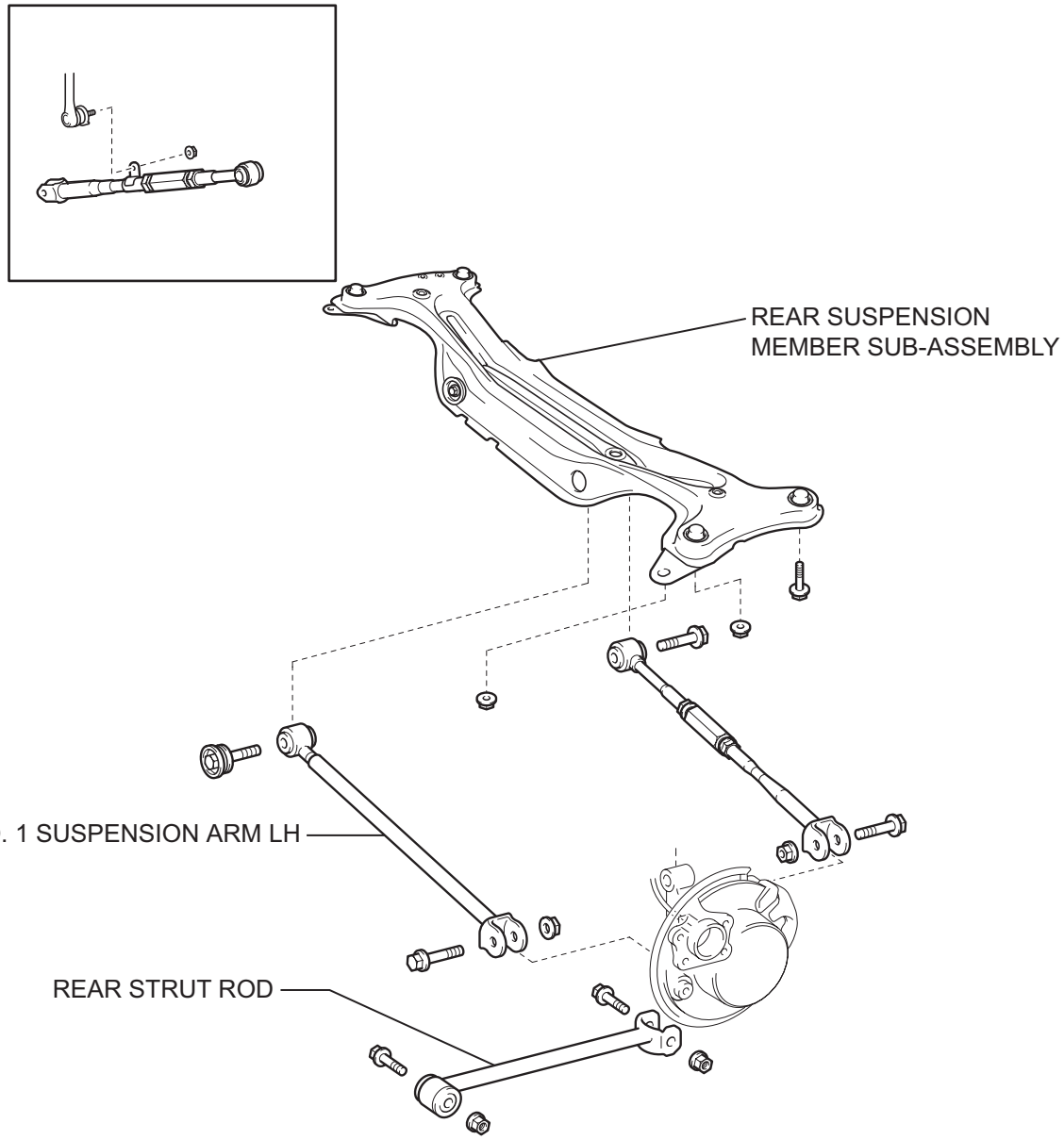

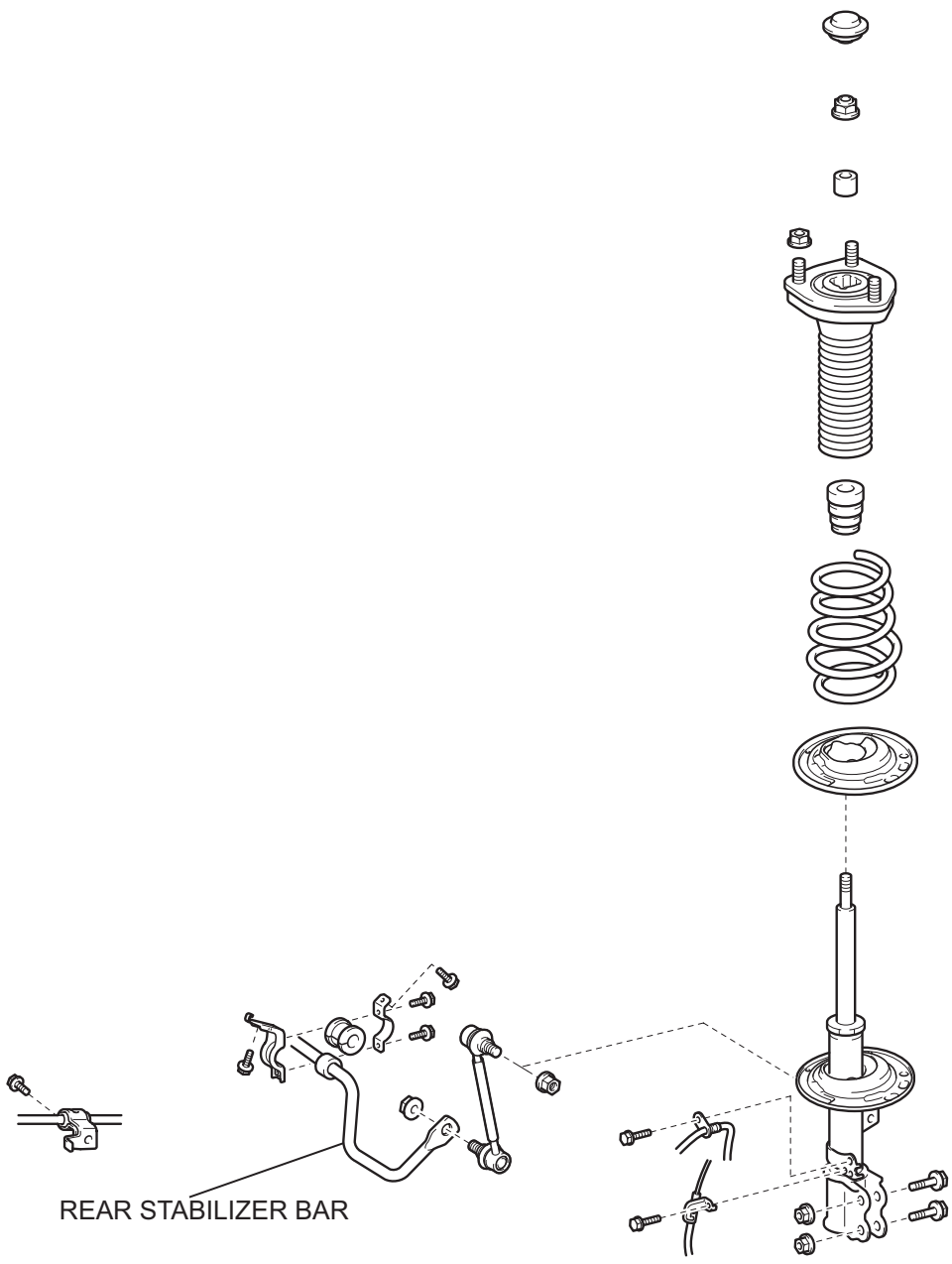

P

C131573E03

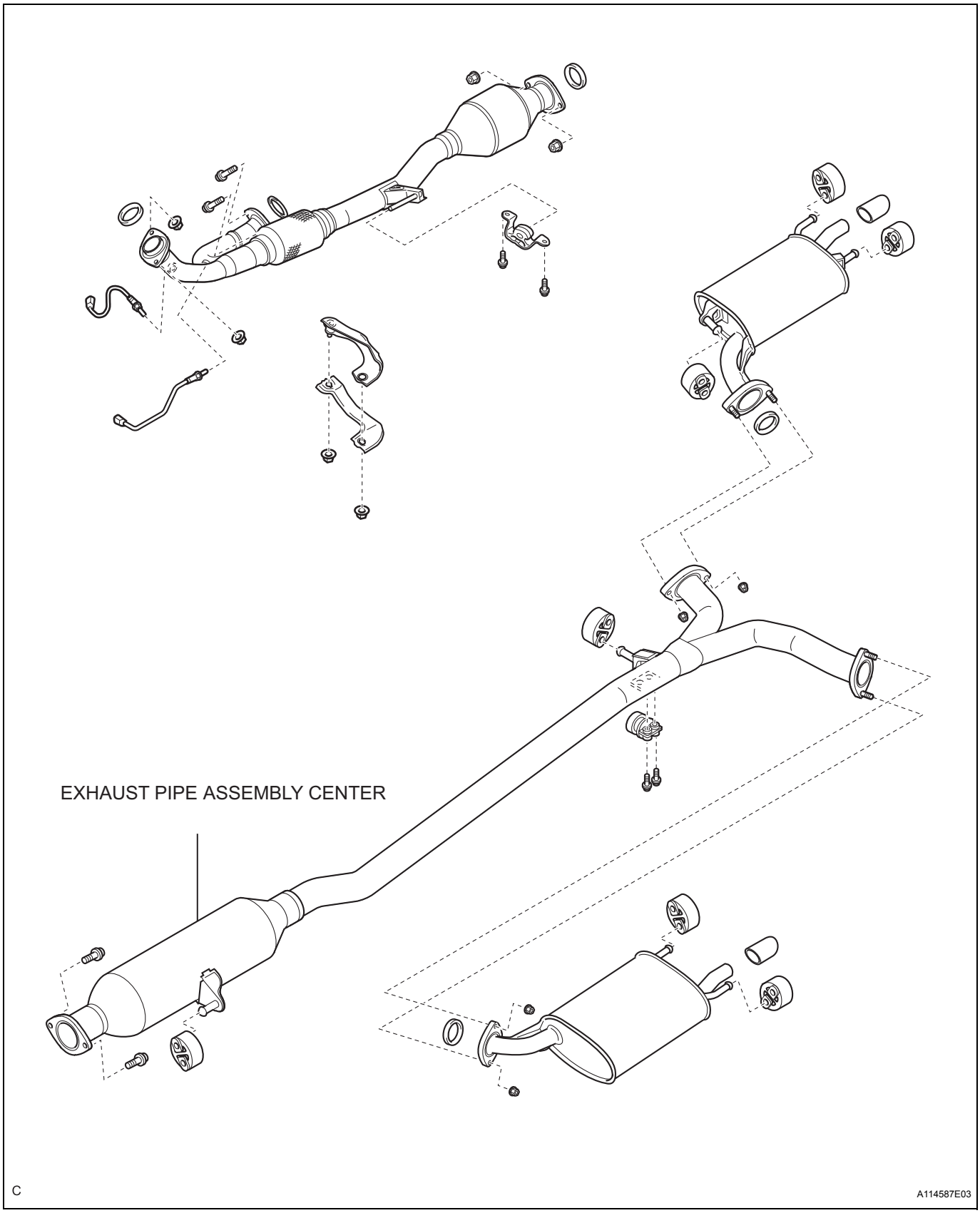
EXHAUST PIPE ASSEMBLY CENTER
C
A114587E03

REMOVAL

HINT:
- Use the same procedures for the RH side and LH side.
- The procedures listed below are for the LH side.

1. **REMOVE REAR WHEEL**
2. **REMOVE EXHAUST PIPE ASSEMBLY CENTER**
   (a) Remove the exhaust pipe assembly center (See page EX-2).
3. **REMOVE REAR STABILIZER BAR**
   (a) Remove the rear stabilizer bar (See page SP-56).
4. **REMOVE REAR STRUT ROD**
   (a) Remove the rear strut rod (See page SP-40).
5. **SEPARATE HEIGHT CONTROL SENSOR SUB-ASSEMBLY REAR RH (WITH DISCHARGE HEAD LIGHT)**
   (a) The height control sensor sub-assembly rear (with discharge heard light) is on the RH side only. Remove the nut, and separate the height control sensor sub-assembly rear RH.

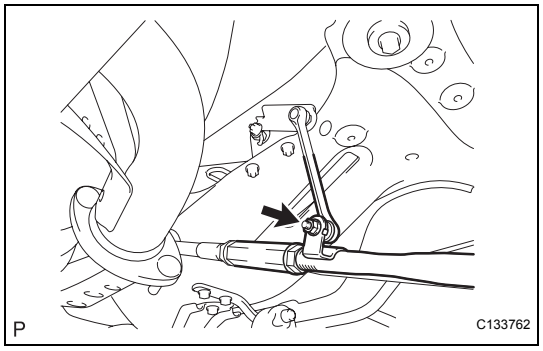

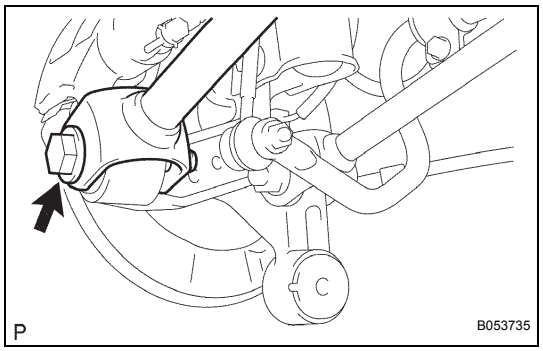

6. **SEPARATE REAR NO. 2 SUSPENSION ARM LH**
   (a) Remove the bolt, nut and the rear suspension arm No. 2 (outer side) from the rear axle carrier.
   NOTICE:
   When removing the bolt, keep the nut from rotating.
7. **SEPARATE REAR NO. 2 SUSPENSION ARM RH**
   HINT:
   Separate the RH side using the same procedures as for the LH side.
8. **SEPARATE REAR NO. 1 SUSPENSION ARM LH**
   (a) Remove the bolt, nut and the rear suspension arm No. 1 (outer side) from the rear axle carrier.
   NOTICE:
   When removing the bolt, keep the nut from rotating.
9. **SEPARATE REAR NO. 1 SUSPENSION ARM RH**
   HINT:
   Separate the RH side using the same procedures as for the LH side.

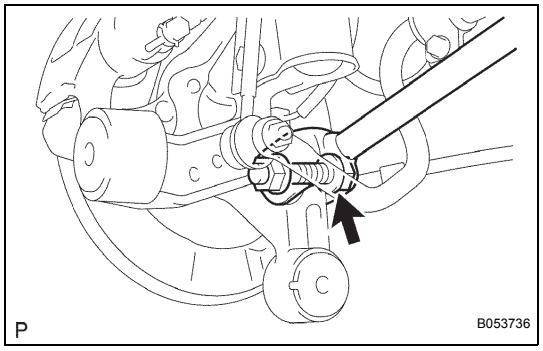

SP

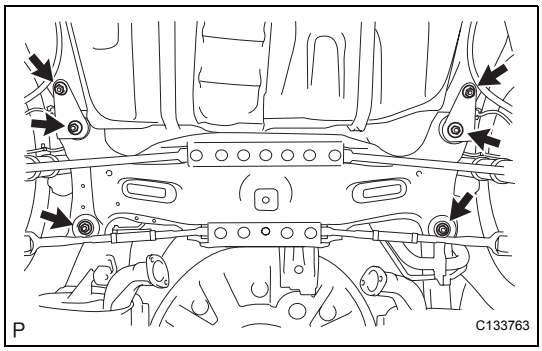

10. REMOVE REAR SUSPENSION MEMBER SUB-ASSEMBLY

(a) Support the rear suspension member with a jack.
(b) Remove the 4 nuts, 2 bolts and 4 retainers from the rear suspension member.
(c) Lower the rear suspension member.

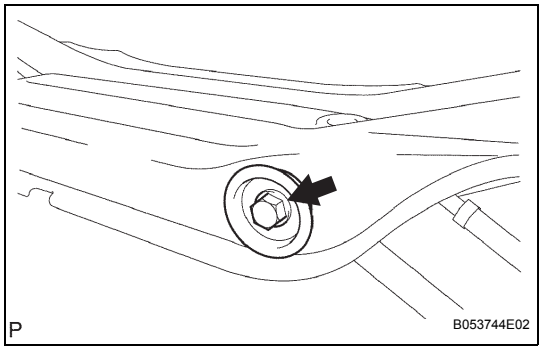

11. REMOVE REAR NO. 1 SUSPENSION ARM

(a) Remove the bolt and rear suspension arm No. 1.

INSTALLATION

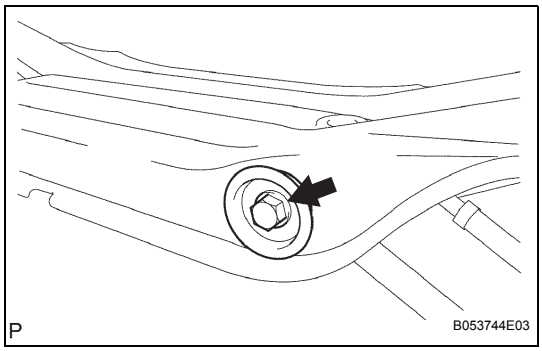

1. INSTALL REAR NO. 1 SUSPENSION ARM

(a) Install the rear suspension arm No.1 with the bolt, and temporarily tighten the bolt.

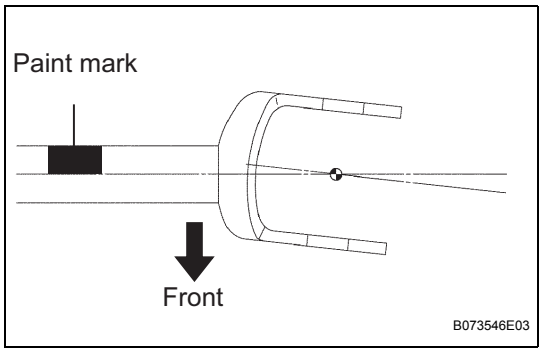

(b) Install the rear suspension arm No.1 with the bolt, and temporarily tighten the bolt.
HINT:
- Install the rear suspension arm No. 1 so that the bracket leans toward the front side of the vehicle, as shown in the illustration.
- Ensure that the paint mark faces the rear side of the vehicle.

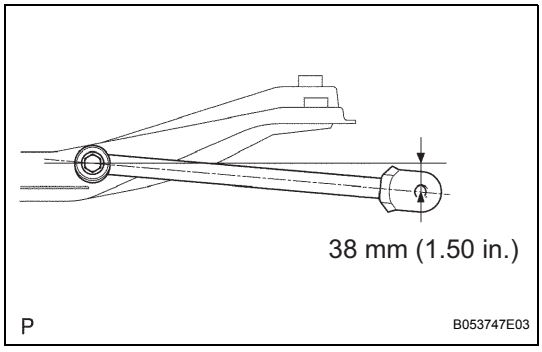

(c) Set the rear suspension arm No. 1 in the position shown in the illustration, and fully tighten the bolt.
Torque: 100 N*m (1,020 kgf*cm, 74 ft.*lbf)

2. INSTALL REAR SUSPENSION MEMBER SUB-ASSEMBLY

(a) Raise the rear suspension member with a jack.

SP

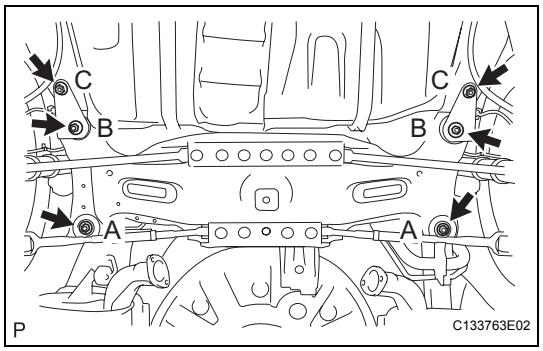

(b) Install the rear suspension member with the 4 nuts, 2 bolts and 4 retainers.
Torque: A, B
55 N*m (561 kgf*cm, 41 ft.*lbf)
C
38 N*m (387 kgf*cm, 28 ft.*lbf)

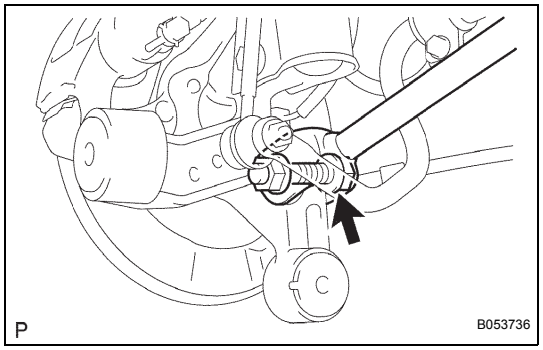

3. TEMPORARILY TIGHTEN REAR NO. 1 SUSPENSION ARM LH

(a) Connect the rear suspension arm No. 1 (outer side) to the rear axle carrier with the bolt and nut and temporarily tighten the bolt and nut.
HINT:
Insert the bolt from the front side of the vehicle and temporarily install it.

4. TEMPORARILY TIGHTEN REAR NO. 1 SUSPENSION ARM RH

HINT:
Temporarily tighten the RH side using the same procedures as for the LH side.

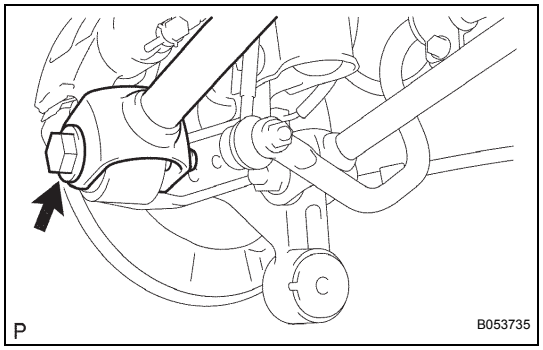

5. TEMPORARILY TIGHTEN REAR NO. 2 SUSPENSION ARM LH

(a) Connect the rear suspension arm No. 2 (outer side) to the rear axle carrier with the bolt and nut and temporarily tighten the bolt.
HINT:
Insert the bolt from the rear side of the vehicle and temporarily install it.

6. TEMPORARILY TIGHTEN REAR NO. 2 SUSPENSION ARM RH

HINT:
Temporarily tighten the RH side using the same procedures as for the LH side.

7. TEMPORARILY TIGHTEN REAR STRUT ROD

(a) Temporarily tighten the rear strut rod (See page SP-40).

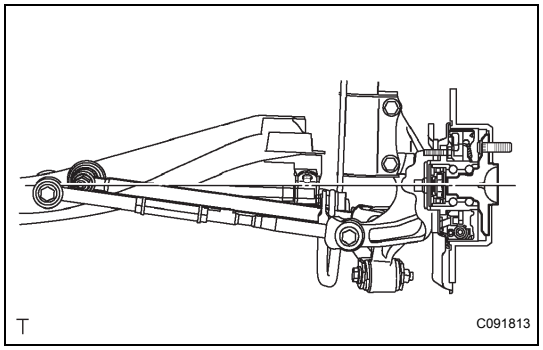

8. STABILIZE SUSPENSION

(a) Jack up the rear axle carrier, placing a wooden block to avoid damage. Apply a load to the suspension so that the installed bolt of the suspension arm assembly No. 1 (inner side of the vehicle) is horizontally aligned with the center of the rear axle hub.

SP

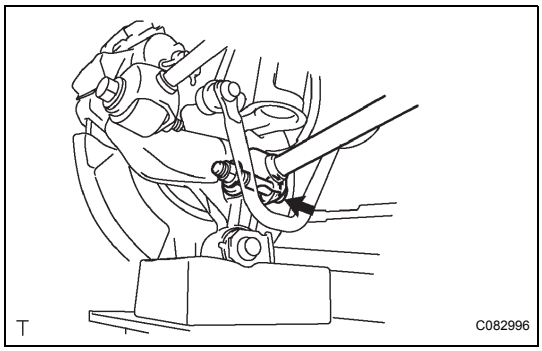

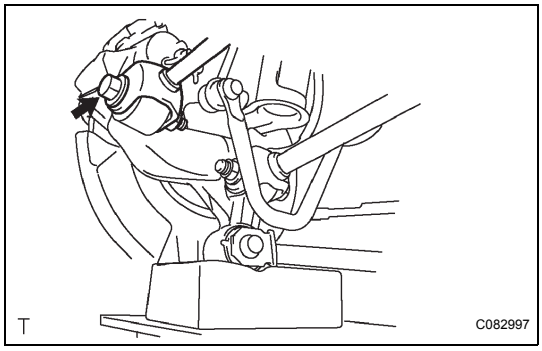

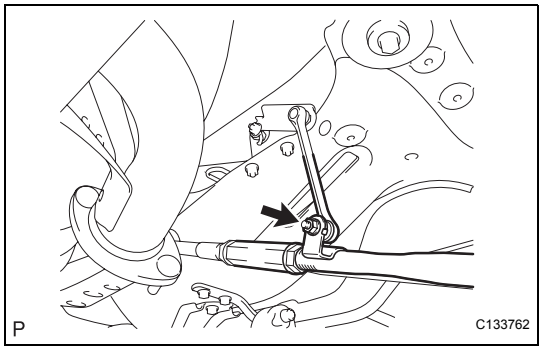

9. **FULLY TIGHTEN REAR NO. 1 SUSPENSION ARM LH**
   (a) Fully tighten the bolt.
   Torque: 100 N*m (1,020 kgf*cm, 74 ft.*lbf)
   NOTICE:
   When installing the bolt, fix the nut and tighten the bolt.

10. **FULLY TIGHTEN REAR NO. 1 SUSPENSION ARM RH**
    HINT:
    Fully tighten the RH side using the same procedures as for the LH side.

11. **FULLY TIGHTEN REAR NO. 2 SUSPENSION ARM LH**
    (a) Fully tighten the bolt.
    Torque: 100 N*m (1,020 kgf*cm, 74 ft.*lbf)
    NOTICE:
    When installing the bolt, fix the nut and tighten the bolt.

12. **FULLY TIGHTEN REAR NO. 2 SUSPENSION ARM RH**
    HINT:
    Fully tighten the RH side using the same procedures as for the LH side.

13. **FULLY TIGHTEN REAR STRUT ROD**
    (a) Fully tighten the rear strut rod (See page SP-40).

14. **INSTALL REAR STABILIZER BAR**
    (a) Install the rear stabilizer bar (See page SP-56).

15. **INSTALL HEIGHT CONTROL SENSOR SUB-ASSEMBLY REAR RH (WITH DISCHARGE HEAD LIGHT)**
    (a) Install the height control sensor sub-assembly rear RH with the nut.
    Torque: 5.4 N*m (55 kgf*cm, 48 in.*lbf)

16. **INSTALL EXHAUST PIPE ASSEMBLY CENTER**
    (a) Install the exhaust pipe assembly center (See page EX-3).

17. **INSTALL REAR WHEEL**
    Torque: 103 N*m (1,050 kgf*cm, 76 ft.*lbf)

18. **INSPECT AND ADJUST REAR WHEEL ALIGNMENT**
    (a) Inspect and adjust the rear wheel alignment (See page SP-11).

19. **HEAD LIGHT AIMING ADJUST (WITH DISCHARGE HEAD LIGHT)**
    (a) Adjust the head light aiming (See page LI-114).

REAR NO. 2 SUSPENSION ARM

COMPONENTS

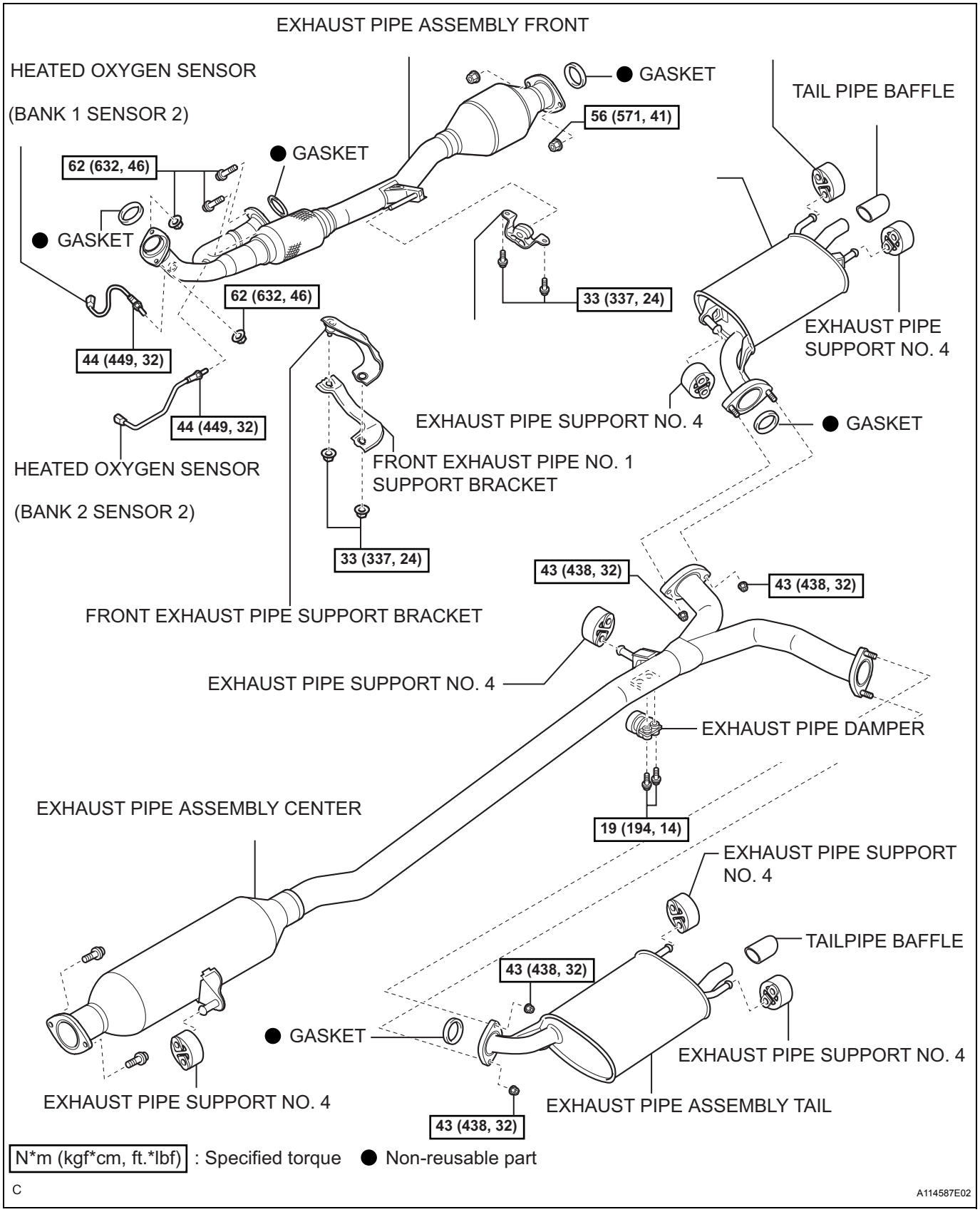

SP

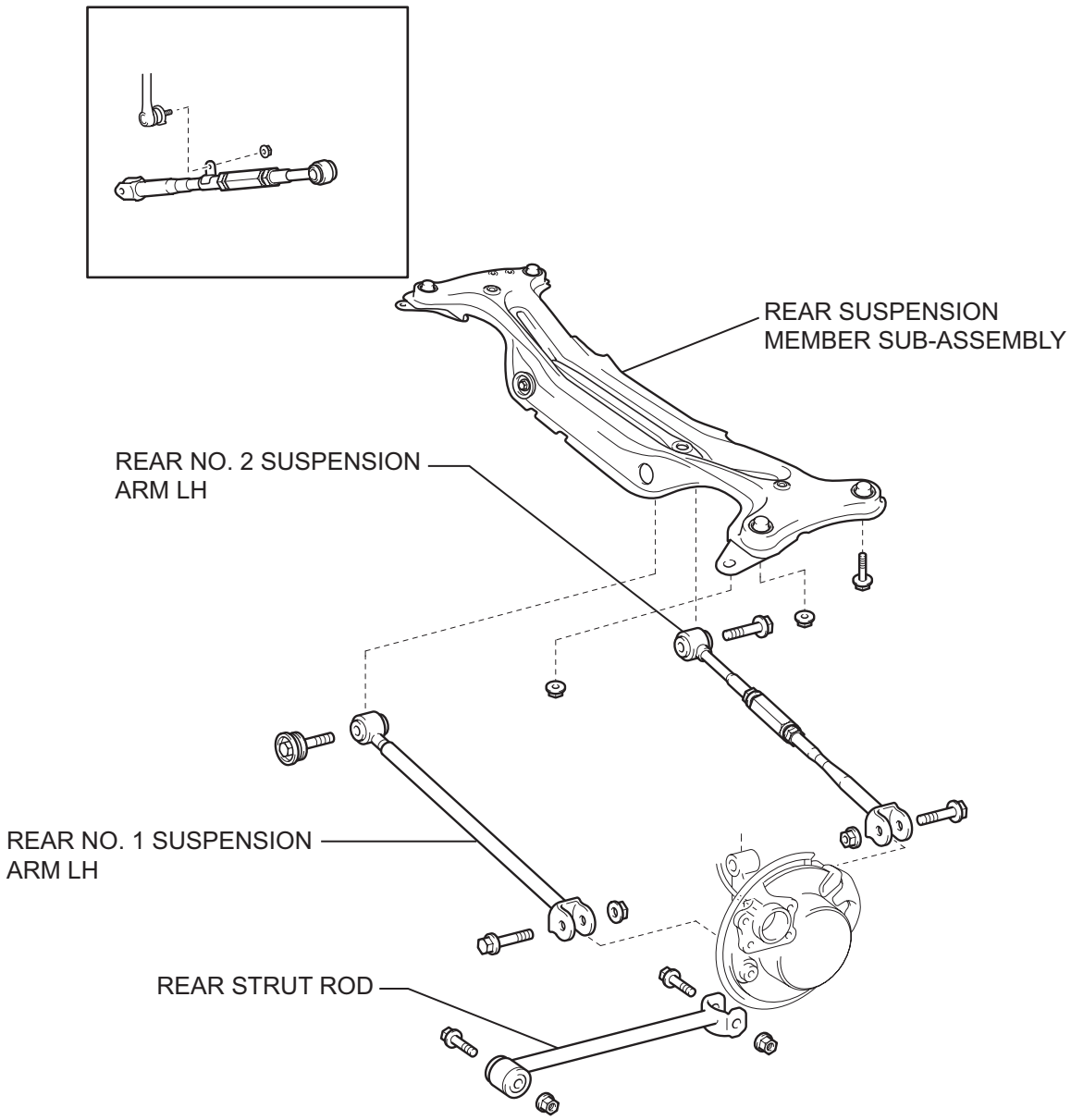

SP

P

C114959E04

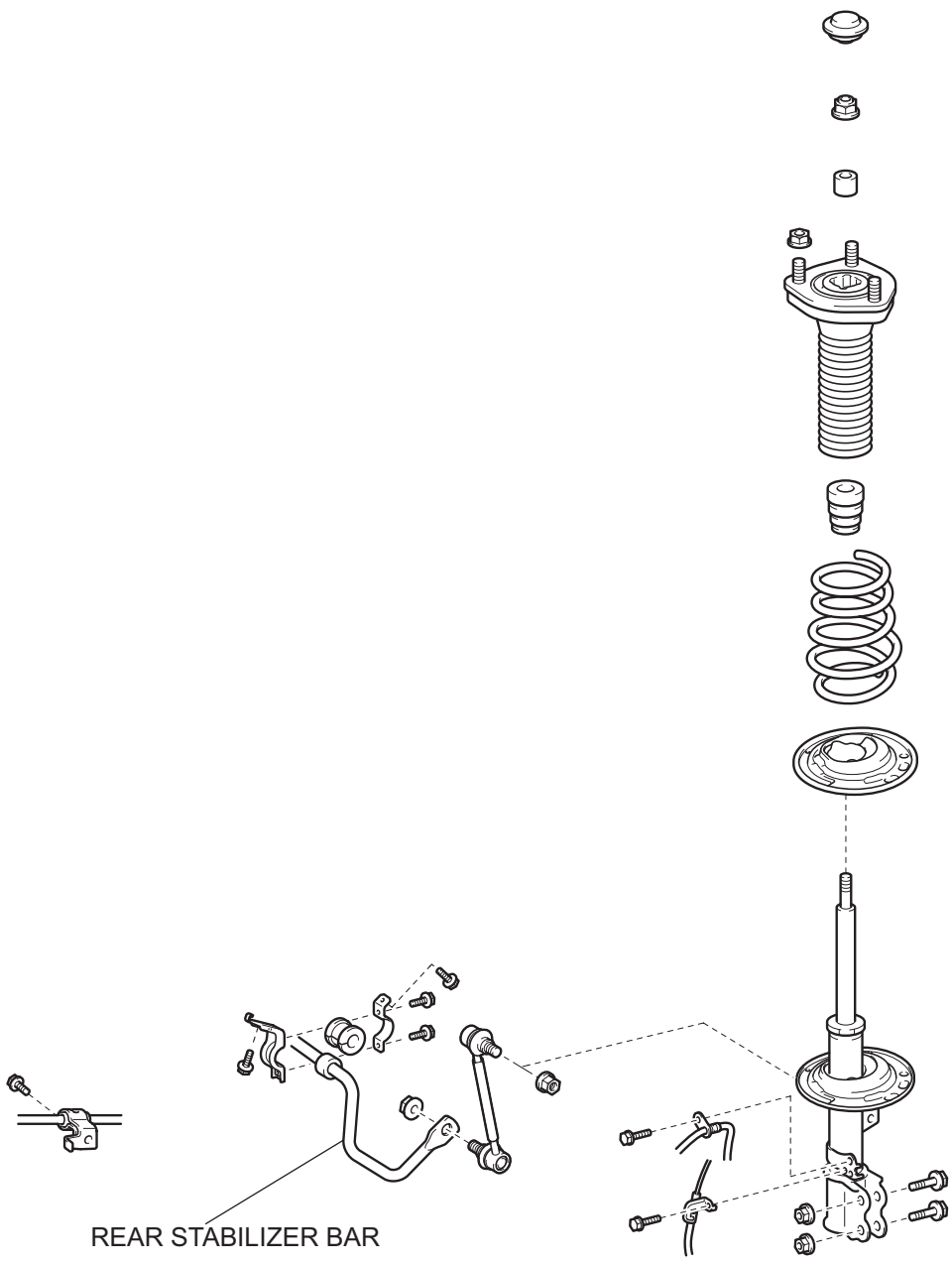

P

C131573E04

REMOVAL

HINT:
- Use the same procedures for the RH side and LH side.
- The procedures listed below are for the LH side.

1. **REMOVE REAR WHEEL**
2. **REMOVE EXHAUST PIPE ASSEMBLY CENTER**
   (a) Remove the exhaust pipe assembly center (See page EX-2).
3. **REMOVE REAR STABILIZER BAR**
   (a) Remove the rear stabilizer bar (See page SP-56).
4. **REMOVE REAR STRUT ROD**
   (a) Remove the rear strut rod (See page SP-40).
5. **SEPARATE HEIGHT CONTROL SENSOR SUB-ASSEMBLY REAR RH (WITH DISCHARGE HEAD LIGHT)**
   (a) Separate height control sensor sub-assembly rear RH (See page SP-44).
6. **SEPARATE REAR NO. 1 SUSPENSION ARM LH**
   (a) Separate rear No. 1 suspension arm LH (See page SP-44).
7. **SEPARATE REAR NO. 1 SUSPENSION ARM RH**
   HINT:
   Separate the RH side using the same procedures as for the LH side.
8. **SEPARATE REAR NO. 2 SUSPENSION ARM LH**
   (a) Separate rear No. 2 suspension arm LH (See page SP-44).
9. **SEPARATE REAR NO. 2 SUSPENSION ARM RH**
   HINT:
   Separate the RH side using the same procedures as for the LH side.
10. **REMOVE REAR SUSPENSION MEMBER SUB-ASSEMBLY**
    (a) Remove the rear suspension member sub-assembly (See page SP-44).
11. **REMOVE REAR NO. 2 SUSPENSION ARM**
    (a) Remove the bolt, and disconnect the rear suspension arm No. 2 (inner side).

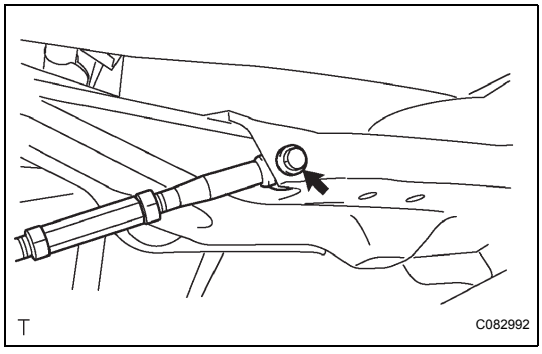

SP

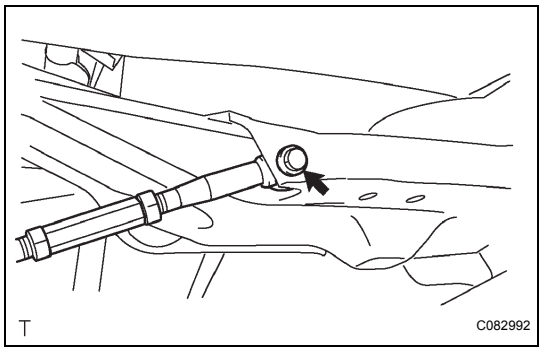

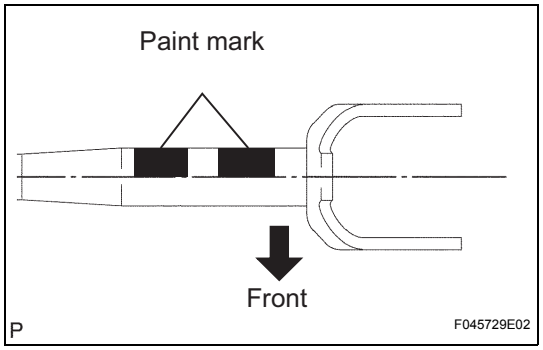

INSTALLATION

1. **INSTALL REAR NO. 2 SUSPENSION ARM**
   (a) Install the rear suspension arm No. 2 (inner side) with the bolt.
   Torque: 100 N*m (1,020 kgf*cm, 74 ft.*lbf)

   (b) Install the rear suspension arm No. 2 (inner side) with the bolt.
   HINT:
   Ensure that the paint marks face the rear side of the vehicle.

2. **INSTALL REAR SUSPENSION MEMBER SUB-ASSEMBLY**
   (a) Install the rear suspension member sub-assembly (See page SP-46).

3. **TEMPORARILY TIGHTEN REAR NO. 1 SUSPENSION ARM LH**

4. **TEMPORARILY TIGHTEN REAR NO. 1 SUSPENSION ARM RH**
   HINT:
   Temporarily tighten the RH side using the same procedures as for the LH side.

5. **TEMPORARILY TIGHTEN REAR NO. 2 SUSPENSION ARM LH**
   (a) Temporarily tighten the rear no. 2 suspension arm LH (See page SP-46).

6. **TEMPORARILY TIGHTEN REAR NO. 2 SUSPENSION ARM RH**
   HINT:
   Temporarily tighten the RH side using the same procedures as for the LH side.

7. **TEMPORARILY TIGHTEN REAR STRUT ROD**
   (a) Temporarily tighten the rear strut rod (See page SP-40).

8. **STABILIZE SUSPENSION**
   (a) Stabilizer the suspension (See page SP-46).

9. **FULLY TIGHTEN REAR NO. 1 SUSPENSION ARM LH**
   (a) Fully tighten the rear No. 1 suspension arm LH (See page SP-46).

10. **FULLY TIGHTEN REAR NO. 1 SUSPENSION ARM RH**
    HINT:
    Fully tighten the RH side using the same procedures as for the LH side.

11. FULLY TIGHTEN REAR NO. 2 SUSPENSION ARM LH

(a) Fully tighten the rear No. 2 suspension arm LH (See page SP-46).

12. FULLY TIGHTEN REAR NO. 2 SUSPENSION ARM RH

HINT:

Fully tighten the RH side using the same procedures as for the LH side.

13. FULLY TIGHTEN REAR STRUT ROD

(a) Fully tighten the rear strut rod (See page SP-40).

14. INSTALL REAR STABILIZER BAR

(a) Install the rear stabilizer bar (See page SP-56).

15. INSTALL HEIGHT CONTROL SENSOR SUB-ASSEMBLY REAR RH (WITH DISCHARGE HEAD LIGHT)

(a) Install the height control sensor sub-assembly rear RH (See page SP-46).

16. INSTALL EXHAUST PIPE ASSEMBLY CENTER

(a) Install the exhaust pipe assembly center (See page EX-3).

17. INSTALL REAR WHEEL

Torque: 103 N*m (1,050 kgf*cm, 76 ft.*lbf)

18. INSPECT AND ADJUST REAR WHEEL ALIGNMENT

(a) Inspect and adjust the rear wheel alignment (See page SP-11).

19. HEAD LIGHT AIMING ADJUSTMENT (WITH DISCHARGE HEAD LIGHT)

(a) Adjust the head light aiming (See page LI-114).

REAR STABILIZER BAR

COMPONENTS

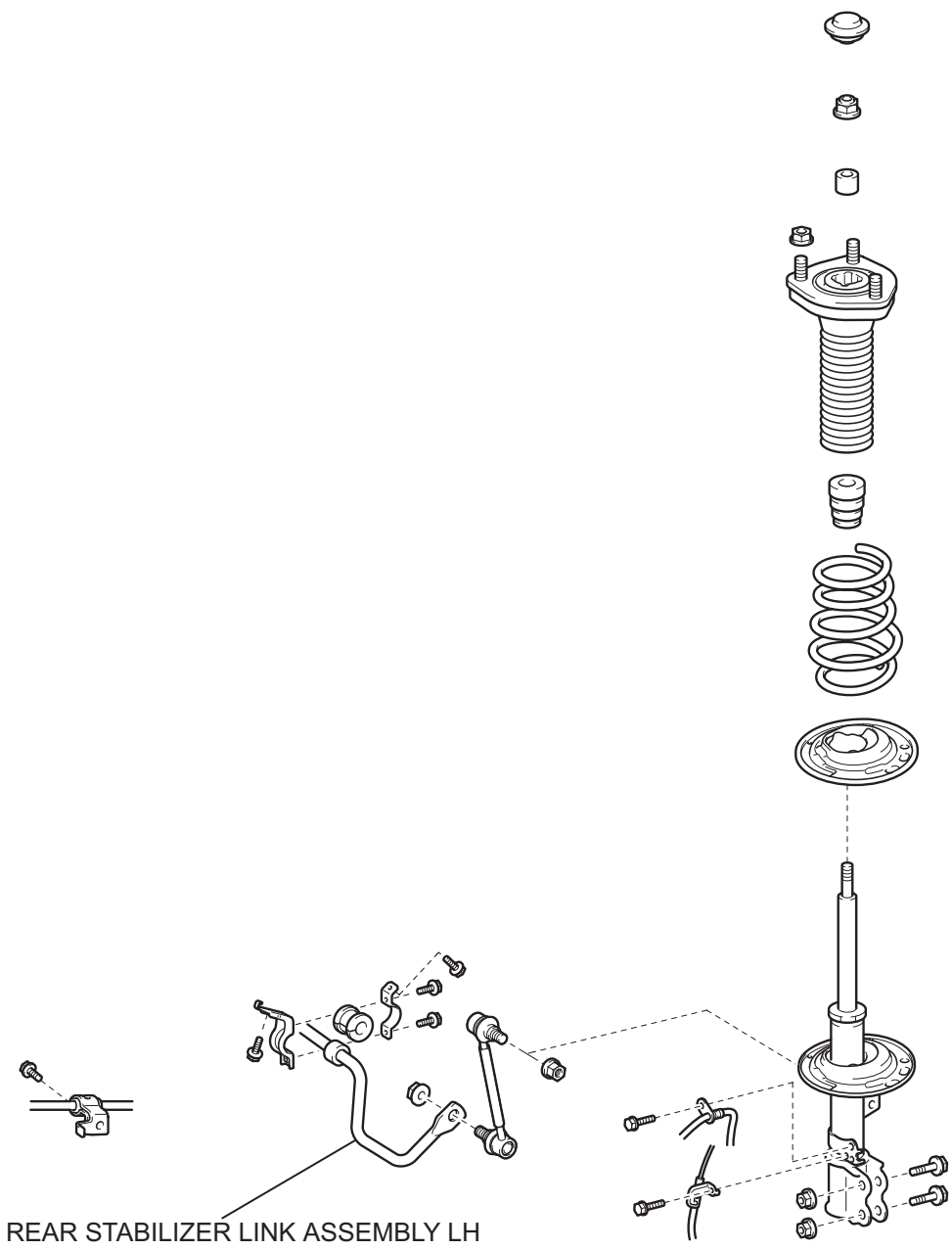

P

C131573E05

REMOVAL

1. **REMOVE REAR WHEEL**

2. **REMOVE REAR STABILIZER LINK ASSEMBLY LH**
   (a) Remove the 2 nuts and stabilizer link.
   HINT:
   If the ball joint turns together with the nut, use a hexagon wrench (5 mm) to hold the stud.

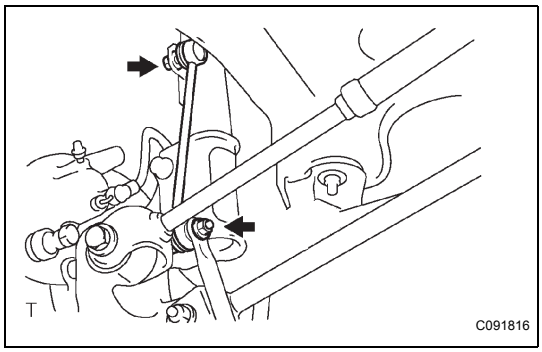

3. **REMOVE REAR STABILIZER LINK ASSEMBLY RH**
   HINT:
   Remove the RH side using the same procedures as for the LH side.

4. **REMOVE REAR STABILIZER BAR**
   (a) Remove the 8 bolts, 4 stabilizer brackets, 2 stabilizer bushes and stabilizer bar.

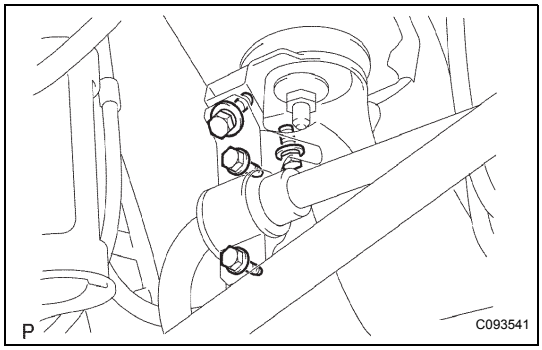

INSPECTION

1. **INSPECT REAR STABILIZER LINK ASSEMBLY**
   (a) Before installing the nut, flip the ball joint stud back and forth 5 times as shown in the illustration.
   (b) Using a torque wrench, continuously turn the nut 3 to 5 seconds per turn, and take the torque reading on the 5th turn.
   Torque: Turning torque
   1.0 N*m (10 kgf*cm, 9 in.*lbf) or less
   If the value is not within the specification, replace the rear stabilizer link assembly with a new one.
   NOTICE:
   - **Check that neither unusual drag nor rattle occurs during the rotation.**
   - **Check that neither cracks nor grease leakage exists on the dust cover.**

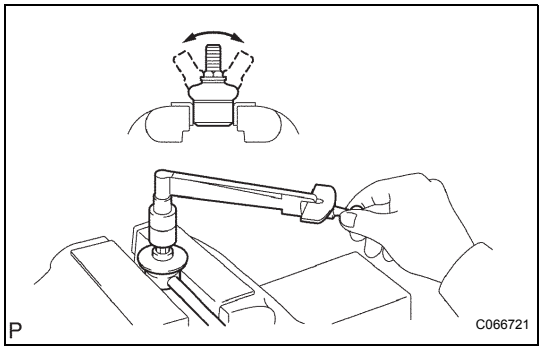

SP

INSTALLATION

1. **INSTALL REAR STABILIZER BAR**
   (a) Install the stabilizer bush to the outer side of the stopper ring on the stabilizer bar.

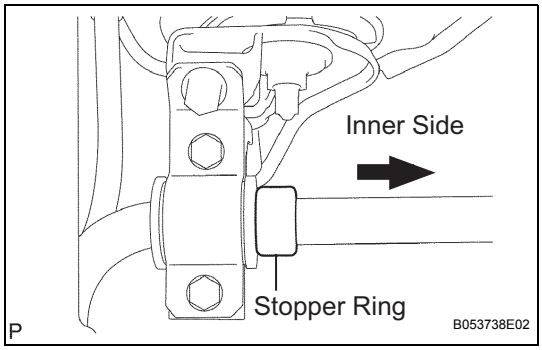

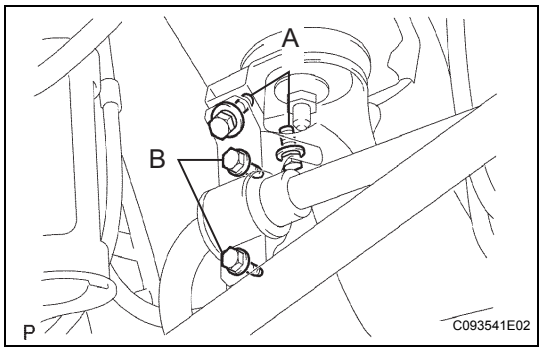

(b) Install the 2 stabilizer bushes and 4 stabilizer brackets with the 8 bolts.
Torque: 19 N*m (195 kgf*cm, 14 ft.*lbf)
HINT:
2 types of bolts (A, B) are used, so make sure the correct bolts are installed.

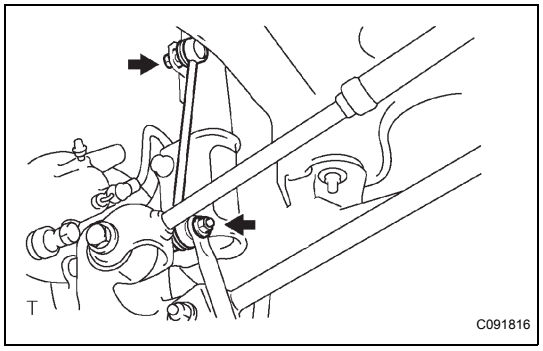

2. INSTALL REAR STABILIZER LINK ASSEMBLY LH

(a) Install the stabilizer link with the 2 nuts.
Torque: 39 N*m (400 kgf*cm, 29 ft.*lbf)
HINT:
If the ball joint turns together with the nut, use a hexagon wrench (5 mm) to hold the stud.

3. INSTALL REAR STABILIZER LINK ASSEMBLY RH

HINT:
Install the RH side using the same procedure as for the LH side.

4. INSTALL REAR WHEEL

Torque: 103 N*m (1,050 kgf*cm, 76 ft.*lbf)

5. INSPECT AND ADJUST REAR WHEEL ALIGNMENT

(a) Inspect and adjust the rear wheel alignment (See page SP-11).

THEFT DETERRENT SYSTEM

PRECAUTION

NOTICE:
When disconnecting the negative (-) battery terminal, initialize the following systems after the terminal is reconnected.

System Name	See procedure
Power Window Control System	IN-36
Sliding Roof System	IN-36

1. EXPRESSIONS OF IGNITION SWITCH

The type of ignition switch used on this model differs according to the specifications of the vehicle.
The expressions listed in the table below are used in this section.

Switch Type		Ignition Switch (position)	Engine Switch (condition)
Expression	Ignition Switch off	LOCK	Off
	Ignition Switch on (IG)	ON	On (IG)
	Ignition Switch on (ACC)	ACC	On (ACC)
	Engine Start	START	Start

PARTS LOCATION

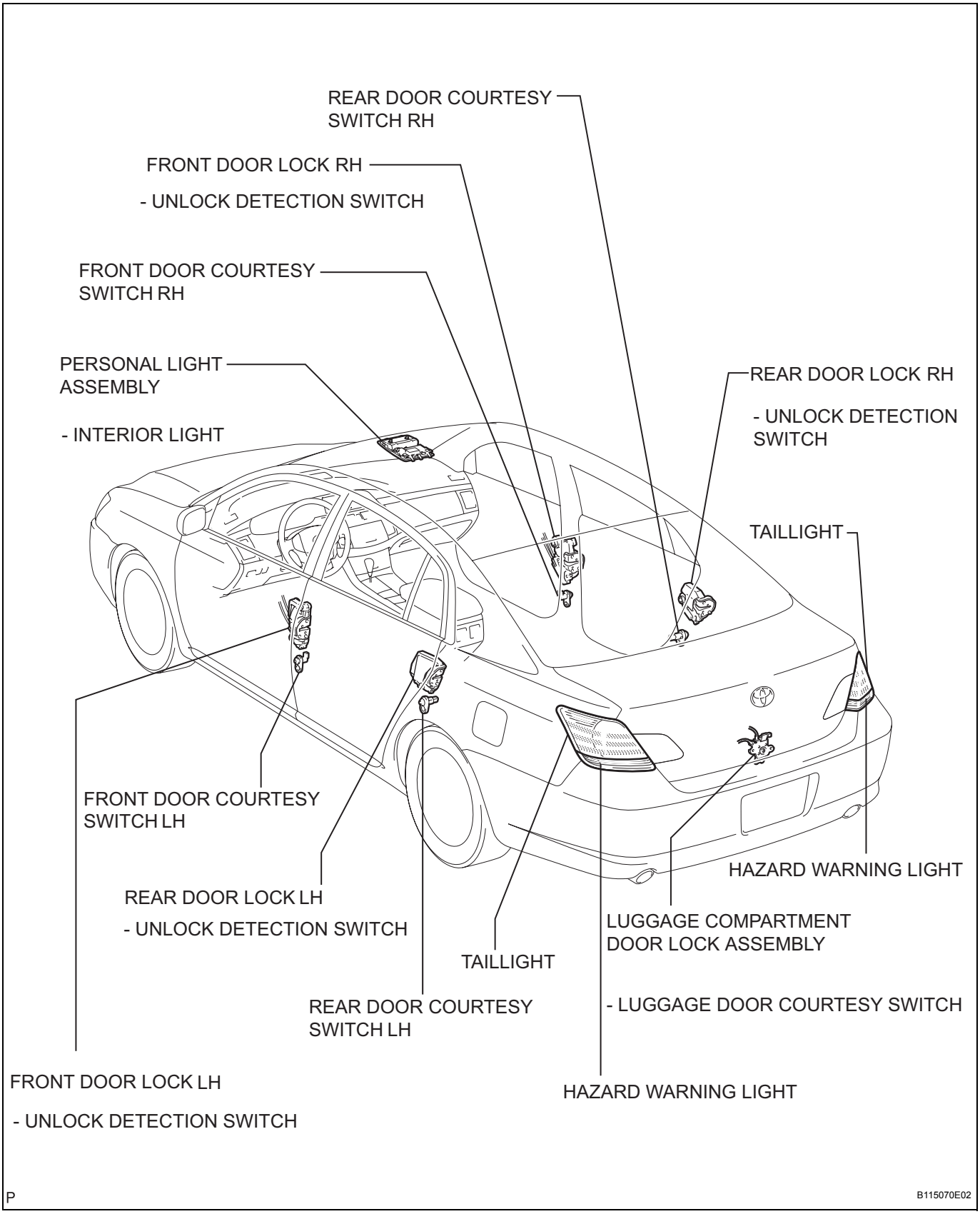

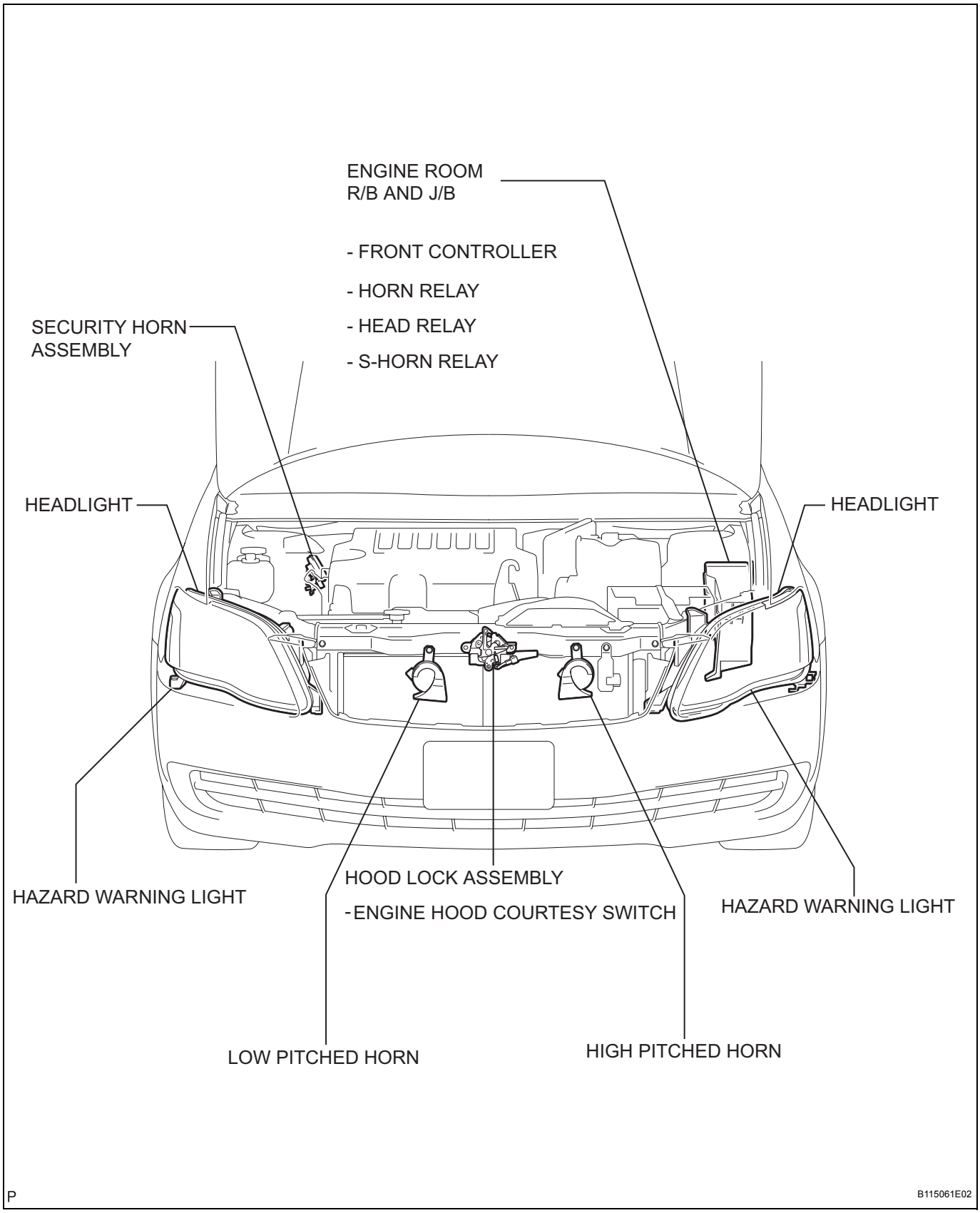
ENGINE ROOM
R/B AND J/B
- FRONT CONTROLLER
- HORN RELAY
- HEAD RELAY
- S-HORN RELAY
SECURITY HORN
ASSEMBLY
HEADLIGHT
HEADLIGHT
HAZARD WARNING LIGHT
HOOD LOCK ASSEMBLY
- ENGINE HOOD COURTESY SWITCH
HAZARD WARNING LIGHT
LOW PITCHED HORN
HIGH PITCHED HORN
P
B115061E02

TD

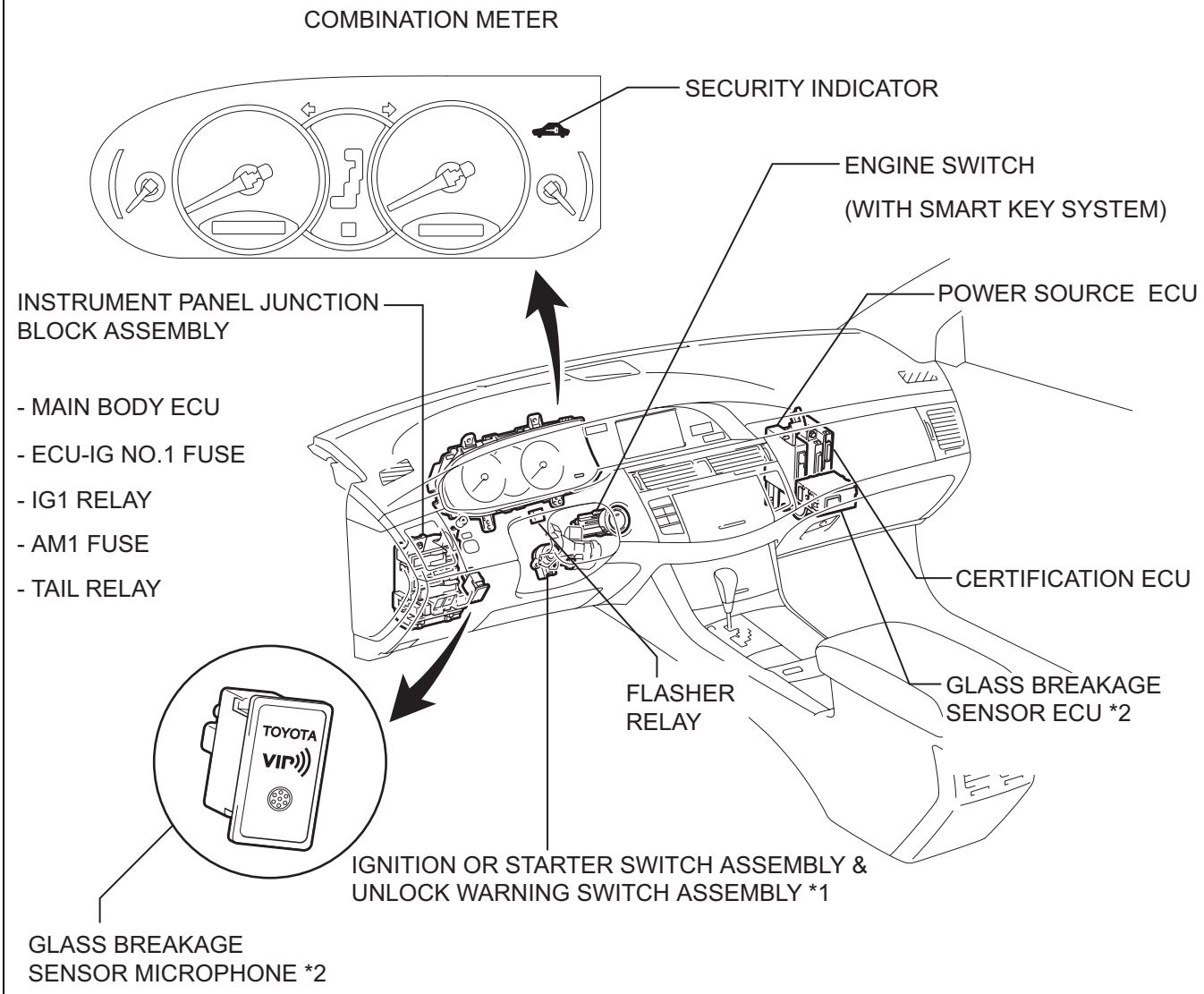

*1 : without Smart Key System

*2 : with Glass Breakage Sensor

P

B115051E03

SYSTEM DIAGRAM

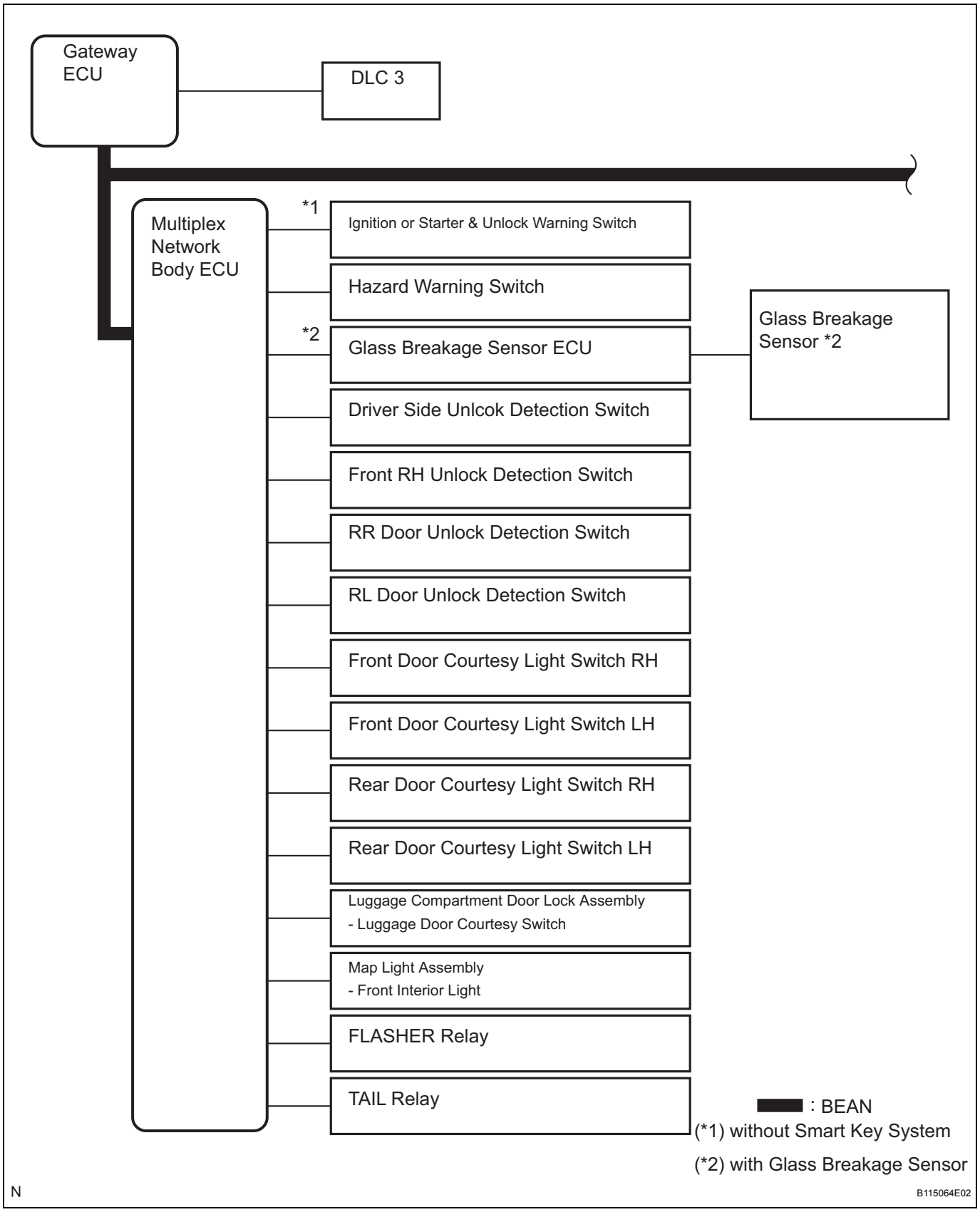

TD

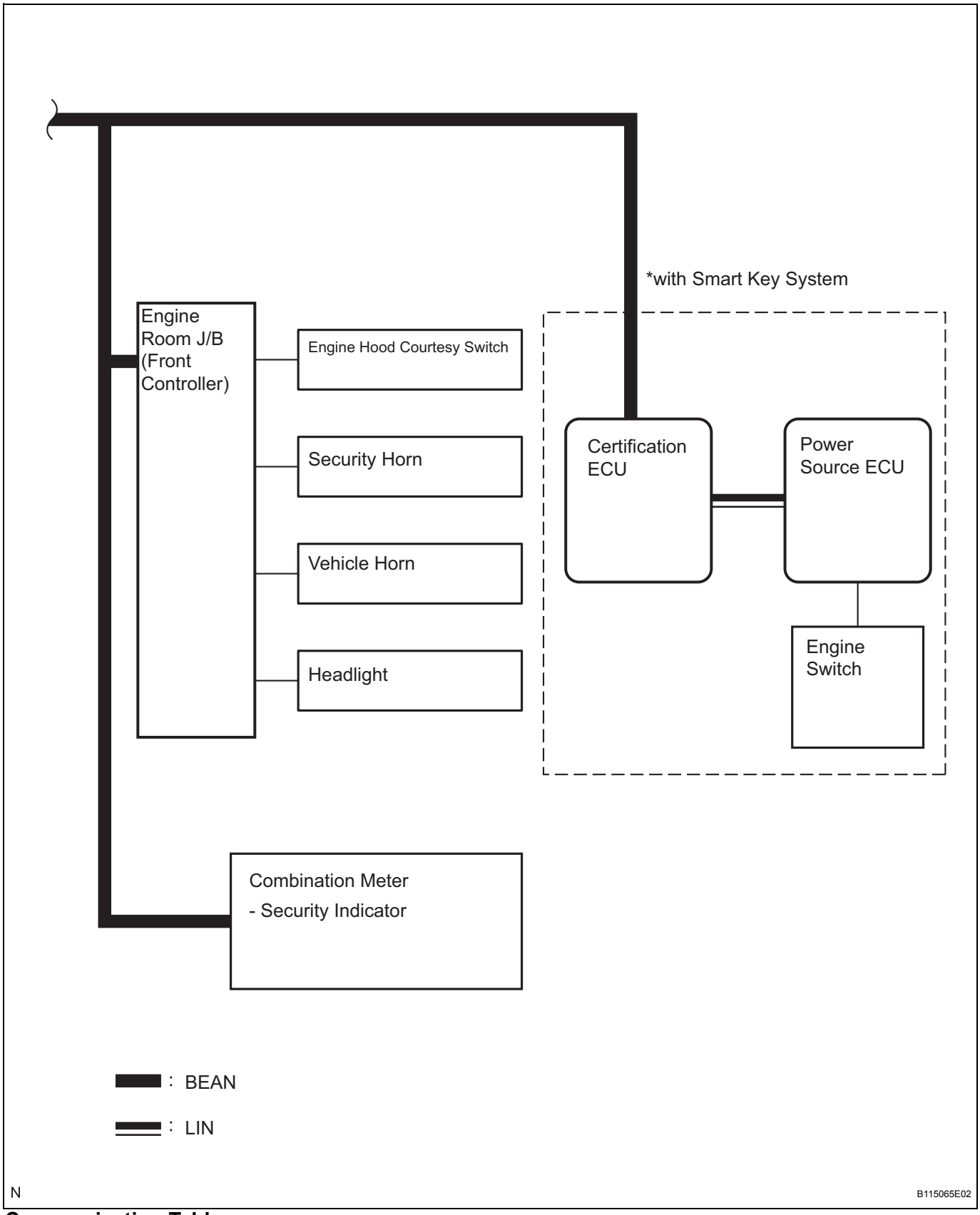

Communication Table:

Transmitting ECU (Transmitter)	Receiving ECU (Receiver)	Signal	Line
Multiplex Network Body ECU	Front Controller	• Security horn sound request • Vehicle horn sound request • Headlight on request	BEAN

Transmitting ECU (Transmitter)	Receiving ECU (Receiver)	Signal	Line
Certification ECU	Multiplex Network Body ECU	Engine switch signal (with Smart key system)	BEAN
Front Controller	Multiplex Network Body ECU	Hood courtesy switch signal	BEAN
Multiplex Network Body ECU	Combination Meter	Security indicator operation signal	BEAN

SYSTEM DESCRIPTION

The theft deterrent system will operate when somebody attempts to forcibly enter the vehicle, open the engine hood or the luggage compartment door, or unlock any door or the luggage compartment door without using the key, or when the battery terminals are removed and reconnected.

- The system consists of door lock control system parts, wireless door lock remote control system parts, and smart key system parts, security horn, and security indicator light.
- The multiplex network body ECU controls this system.

HOW TO PROCEED WITH TROUBLESHOOTING

HINT:

- Use this procedure to troubleshoot the theft deterrent system.
- The intelligent tester should be used in step 3.

TD

1	VEHICLE BROUGHT TO WORKSHOP

NEXT

2	CUSTOMER PROBLEM ANALYSIS CHECK AND SYMPTOM CHECK

(a) Interview the customer to confirm the trouble (See page IN-36).

NEXT

3	INSPECT COMMUNICATION FUNCTION OF MULTIPLEX COMMUNICATION SYSTEM (BEAN)

(a) Use the intelligent tester to check for normal function of the multiplex communication system.
  (1) (ECU unconnected, communication line malfunctioning) If no code is outputs, proceed to A.
  (2) (ECU unconnected, communication line malfunctioning) If any code is outputs, proceed to B.

B → Go to MULTIPLEX COMMUNICATION SECTION

A

4	PROBLEM SYMPTOMS TABLE

(a) If the fault is not listed in the problem symptoms table, proceed to A.
(b) If the fault is listed in the problem symptoms table, proceed to B.

B → Go to step 6

A

5	PERFORM TROUBLESHOOTING ACCORDING TO MALFUNCTION SYMPTOM

(a) Terminals of ECU (See page TD-11)
(b) On-vehicle inspection (See page TD-16)

NEXT

6	**ADJUST, REPAIR OR REPLACE**

NEXT

TD

7	**CONFIRMATION TEST**

NEXT

END

CUSTOMIZE PARAMETERS

HINT:
The following items can be customized.

NOTICE:

- **After confirming whether the items requested by the customer are applicable or not for customization, perform customizing operations.**
- **Be sure to record the current settings before customization.**
- **When troubleshooting, make sure that the item in question is not set to "OFF" as a result of customization (Example: For the symptom "the wireless function does not operate", first check that the wireless function is not set to "OFF", then perform troubleshooting).**

THEFT DETERRENT SYSTEM

DISPLAY (ITEM)	DEFAULT	CONTENTS	SETTING
PASSIVE MODE	OFF	For vehicles with the smart key system, PASSIVE MODE is the function that sets the theft deterrent system 30 seconds after the driver's door is closed from the open condition with the key removed from the ignition key cylinder. For vehicles without the smart key system, PASSIVE MODE is the function that sets the theft deterrent system 30 seconds after the driver's door is closed from the open condition with the ignition switch turned from on (IG) to off.	ON/OFF
WARN BY GLS SEN	ON	Function that turns the glass break sensor on/off. This function is only effective for vehicles with glass break sensors.	ON/OFF
ENTRY DELAY	14s	Function that changes the entry delay time (period before starting the warning) for the passive mode.	0s/14s/30s
WARNING BY HORN	ON	Function to make the horn warning available.	ON/OFF

TD

PROBLEM SYMPTOMS TABLE

Proceed to the reference page shown in the table below for each malfunction symptom and troubleshoot each circuit.
HINT:
Troubleshooting of the theft deterrent system is based on the premise that the smart key system, the door lock control system and the wireless door lock control system are operating normally. Therefore, before troubleshooting the theft deterrent system, first make certain that the above 3 systems are operating normally.

THEFT DETERRENT SYSTEM

Symptom	Suspected area	See page
Theft deterrent system cannot be set	1. Security Indicator Light Circuit	TD-40
	2. ECU Power Source Circuit	TD-48
	3. Unlock Warning Switch Circuit (*1)	EI-22
	4. Door Key Lock and Unlock Switch Circuit	DL-57
	5. Door Courtesy Switch Circuit	LI-65
	6. Luggage Compartment Door Courtesy Switch Circuit	DL-51
	7. Engine Hood Courtesy Switch Circuit.	TD-23
	8. Replace Instrument Panel J/B Assembly (Multiplex Network Body ECU)	-
Security indicator does not blink when theft deterrent system is set	Security Indicator Light Circuit	TD-40
Alarm sounding state can not be canceled when ignition switch is turned ON-OFF 10 times within 15 seconds (*1)	1. Ignition Switch Circuit	TD-33
	2. Unlock Warning Switch Circuit (*1)	EI-22
Theft deterrent system can be set even when a door is open	Door Courtesy Switch Circuit	LI-65
Vehicle horns (low pitched, high pitched) do not sound while theft deterrent system is in warning operation	Horn Circuit	TD-26
Headlights do not flash while theft deterrent system is in warning operation	Headlight Relay Circuit	LI-40
Taillights do not flash while theft deterrent system is in warning operation	Taillight Relay Circuit	LI-84
Hazard warning lights do not flash while theft deterrent system is in warning operation	Hazard Warning Switch Circuit	LI-58
Interior light does not light up while theft deterrent system is in warning operation	Illumination Circuit	LI-77
Security horn does not sound while theft deterrent system is in warning operation	Security Horn Circuit	TD-30
Headlights flash even when theft deterrent system is not set	Headlight Relay Circuit	LI-40
Taillights flash even when theft deterrent system is not set	Taillight Relay Circuit	LI-84
Hazard warning lights flash even when theft deterrent system is not set	Hazard Warning Switch Circuit	LI-58
Interior lights comes on even when theft deterrent system is not set	Illumination Circuit	LI-77
Glass breakage sensor does not operate (*2)	Glass Breakage Sensor Circuit	TD-43

HINT:
- *1: without Smart Key System
- *2: with Glass Breakage Sensor

TERMINALS OF ECU

1. CHECK INSTRUMENT PANEL J/B ASSEMBLY (MULTIPLEX NETWORK BODY ECU)

(a) Disconnect the D6, D7 and D8 ECU connectors.

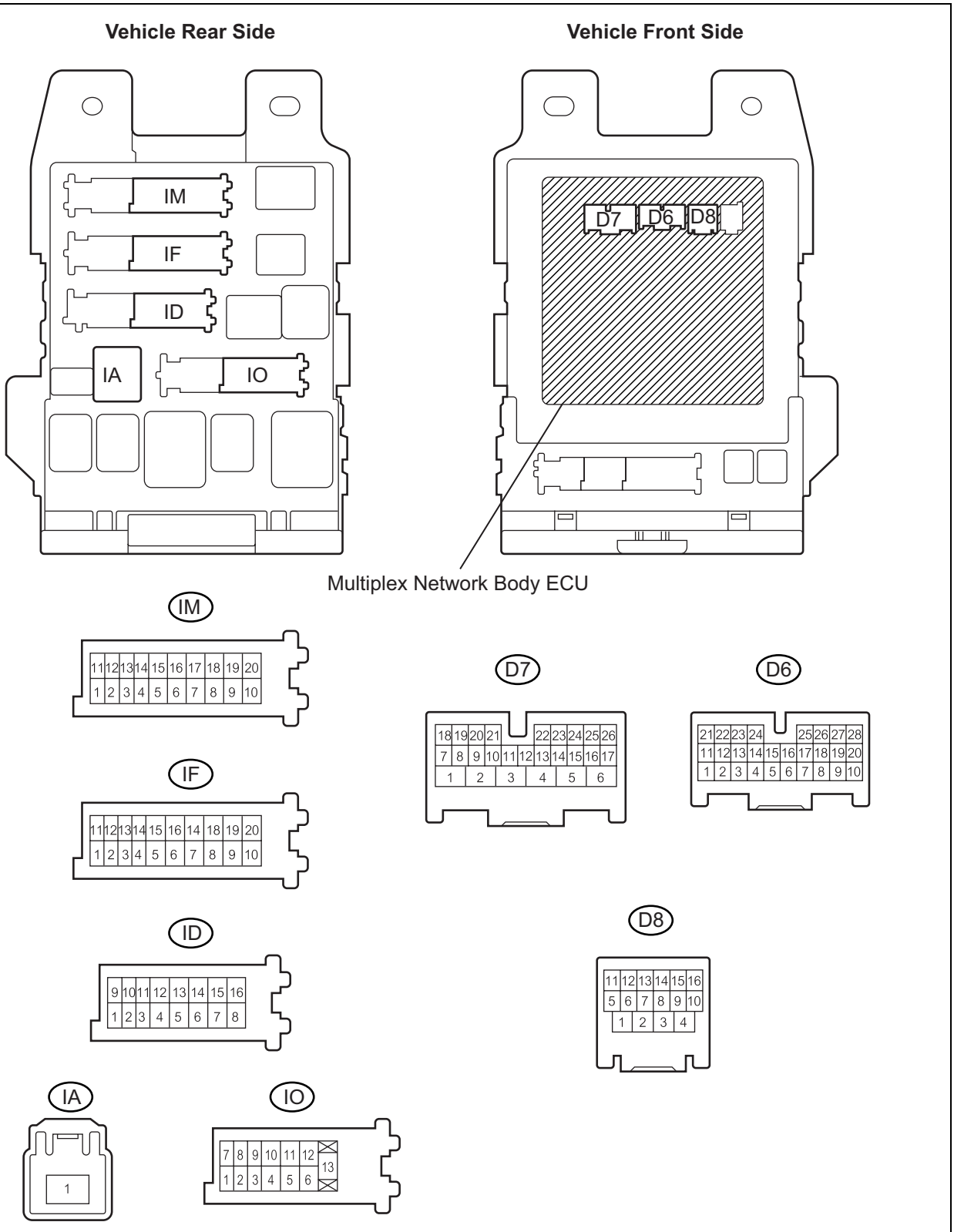

H

E126078E02

(b) Disconnect the IA, ID, IF and IM J/B connectors.
(c) Check the voltage and resistance between each terminal of the wire harness side connectors and body ground.

Symbols (Terminal No.)	Wiring Color	Terminal Description	Condition	Specified Condition
(IA-1) - Body ground	B - Body ground	Ignition power supply	Always	10 to 14 V
(ID-10) - Body ground	O - Body ground	+B (BECU) power supply	Always	10 to 14 V
(IF-10) - Body ground	W-B - Body ground	Ground	Always	Below 1 Ω
(IM-9) - Body ground	W-B - Body ground	Ground	Always	Below 1 Ω
(IO-7) - Body ground	B - Body ground	Rear LH courtesy switch	Rear door LH CLOSED (OFF) → OPEN (ON)	10 kΩ or higher → Below 1 Ω
PCTY (D6-23) - Body ground	L - Body ground	Passenger side courtesy switch	Passenger side door CLOSED (OFF) → OPEN (ON)	10 kΩ or higher → Below 1 Ω
LGCY (D6-25) - Body ground	V - Body ground	Luggage compartment door courtesy switch	Luggage compartment door CLOSED (OFF) → OPEN (ON)	10 kΩ or higher → Below 1 Ω
KSW (D7-21) - Body ground	*1 B - Body ground	Key unlock warning switch input	No key in ignition key cylinder (OFF) → Key inserted (ON)	10 kΩ or higher → Below 1 Ω
DCTY (D8-14) - Body ground	L - Body ground	Driver side courtesy switch	Driver side door CLOSED (OFF) → OPEN (ON)	10 kΩ or higher → Below 1 Ω
RCTY (D8-16) - Body ground	GR - Body ground	Rear RH courtesy switch	Rear door RH CLOSED (OFF) → OPEN (ON)	10 kΩ or higher → Below 1 Ω

HINT:
*1: without Smart key system
If the result is not as specified, there may be a malfunction on the wire harness side.

(d) Reconnect the D6, D7 and D8 ECU connectors.
(e) Reconnect the 1A, 1D, 1F and 1M J/B connectors.
(f) Check the voltage between each terminal of the connectors and the body ground.

Symbols (Terminal No.)	Wiring Color	Terminal Description	Condition	Specified Condition
HAZ (D7-2) - Body ground	P - Body ground	Hazard warning light drive	Answer-back OFF → Answer-back ON	Below 1 V → Pulse generation
GBS (D7-14) - Body ground	*1 G - Body ground	Glass breakage sensor ECU communication	Armed stated → Alarm sounds (on glass breakage detection)	Below 1 V → Pulse generation
IND (D7-24) - Body ground	W - Body ground	Security indicator	Security indicator lights up (It lights up only for 30 sec. in alarm sounding state. If flashes when immobiliser system is operating.)	3 to 6 V

HINT:
*1: with Glass breakage sensor
If the result is not as specified, the J/B assembly (multiplex network body ECU) may have a malfunction.

2. CHECK ENGINE ROOM J/B ASSEMBLY (FRONT CONTROLLER)

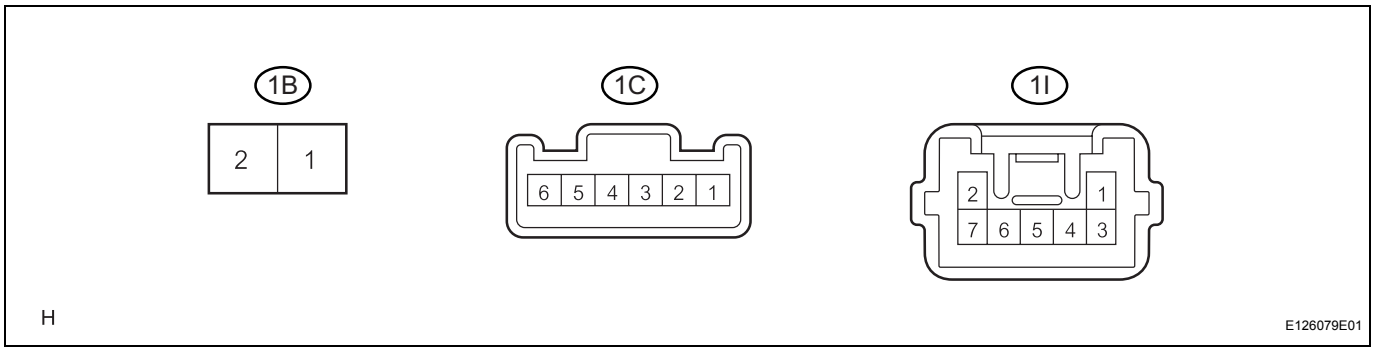

(a) Disconnect the 1B, 1C and 1I ECU connectors.
(b) Check the resistance between each terminal of the wire harness connectors and body ground.

Terminal No.	Wiring Color	Terminal Description	Condition	Specified Condition
1I-7 - Body ground	L - Body ground	Engine hood courtesy switch	Engine hood CLOSED (OFF) → OPEN (ON)	10 kΩ or higher → Below 1 Ω

If the result is not as specified, there may be a malfunction on the wire harness side.

(c) Reconnect the 1B, 1C and 1I ECU connectors.
(d) Check the voltage between each terminal of the connectors and the body ground.

Terminal No.	Wiring Color	Terminal Description	Condition	Specified Condition
1B-2 - Body ground	L - Body ground	Security horn	Security horn is sounding (Theft deterrent system is in alarm sounding state)	10 to 14 V
1C-1 - Body ground	GR - Body ground	Vehicle horn	Vehicle horn is sounding	10 to 14 V

If the result is not as specified, there may be a malfunction on the wire harness side.

DIAGNOSIS SYSTEM

1. DESCRIPTION

(a) The multiplex network body ECU controls the functions of the theft deterrent system on the vehicle. Theft deterrent system data can be read in the Data Link Connector 3 (DLC3) of the vehicle. When the system seems to be malfunctioning, use the intelligent tester to check for a malfunction and perform repairs.

2. DLC3 CHECK

(a) The multiplex network body ECU uses ISO 9141-2 BEAN for its communication protocol. The terminal arrangement of the DLC3 complies with SAEJ1962 and matches the ISO 9141-2 format.

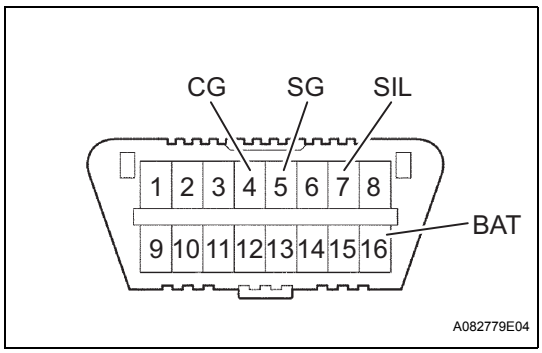

Symbol	Terminal No.	Name	Reference terminal	Result	Condition
SIL	7	Bus "+" line	5-Signal ground	Pulse generation	During transmission
CG	4	Chassis ground	Body ground	1 Ω or less	Always
SG	5	Signal ground	Body ground	1 Ω or less	Always
BAT	16	Battery positive	Body ground	9 to 14 V	Always

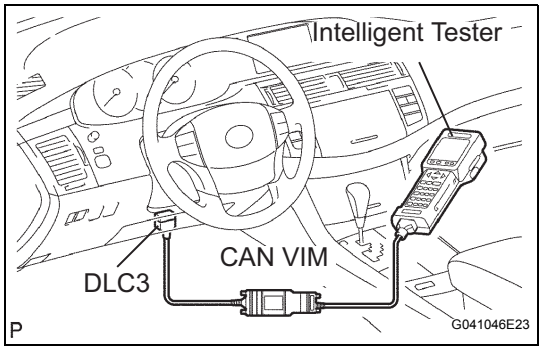

(b) Connect the cable of the intelligent tester (with CAN VIM) to the DLC3, turn the ignition switch on and attempt to use the intelligent tester. If the display indicates that a communication error has occurred, there is a problem either with the vehicle or with the tester.

- If communication is normal when the tool is connected to another vehicle, inspect the DLC3 on the original vehicle.
- If communication is still impossible when the tool is connected to another vehicle, the problem is probably in the tool itself. Consult the Service Department listed in the tool's instruction manual.

3. CHECK BATTERY VOLTAGE

Standard voltage:

11 to 14 V

If voltage is below 11 V, replace the battery.

DATA LIST / ACTIVE TEST

1. DATA LIST

HINT:

Using the intelligent tester DATA LIST allows switch, sensor, actuator and other item values to be read without removing any parts. Reading the DATA LIST early in the troubleshooting process is one way to shorten labor time.

(a) Connect the intelligent tester (with CAN VIM) to the DLC3.

(b) Turn the ignition switch on (IG).

(c) Read the DATA LIST following to the display on the tester.

BODY (Multiplex Network body ECU):

Item	Measurement Item/ Display (Range)	Normal Condition	Diagnostic Note
WARN BY HORN	Warning by horn/ ON or OFF	ON: When switched from armed state to alarm sounding state OFF: When switched from alarm sounding state to armed state or disarmed state	-
PASSIVE MODE	Passive mode/ON or OFF	ON: Passive mode ON OFF: Passive mode OFF	-
WARN BY GLS SEN	Warning by glass breakage sensor/ON or OFF	ON: Warns when glass breakage is detected OFF: Does not warn when glass breakage is detected	-
ENTRY DELAY	Entry delay time during Passive Mode	0s: Entry delay time is 0 sec. 14s: Entry delay time is 14 sec. 30s: Entry delay time is 30 sec.	-
KEY UNLK WRN SW	Unlock warning switch signal/ON or OFF	ON: Key is inserted into the ignition key cylinder OFF: Key is removed from the ignition key cylinder	-
LUGG COURTSY SW	Luggage courtesy switch/ ON or OFF	ON: Luggage compartment door is OPEN OFF: Luggage compartment door is CLOSED	-
D DOR CTY SW	D door courtesy switch/ ON or OFF	ON: Driver side door is OPEN OFF: Driver side door is CLOSED	-
P DOR CTY SW	P door courtesy switch/ON or OFF	ON: Front passenger side door is OPEN OFF: Front passenger side door is CLOSED	-
Rr DOR CTY SW	Rear door courtesy switch/ ON or OFF	ON: Rear door is OPEN OFF: Rear door is CLOSED	-
Rr LOCK POS SW	Rear lock position switch/ ON or OFF	ON: Rear door is UNLOCKED OFF: Rear door is LOCKED	-
P LOCK POS SW	Passenger lock pos switch/ON or OFF	ON: Front passenger side door is UNLOCKED OFF: Front passenger side door is LOCKED	-
D LOCK POS SW	D-door lock pos switch/ON or OFF	ON: Driver side door is UNLOCKED OFF: Driver side door is LOCKED	-
IG SW	Ignition switch signal/ON or OFF	ON: Key is in ON or START position OFF: Key is in OFF or ACC position	-
D/L SW-LOCK	Door lock switch signal/ ON or OFF	ON: Door lock switch is pushed/turned to LOCK position OFF: Door lock switch is not pushed / not turned to LOCK position	-
D/L SW-UNLOCK	Door unlock switch signal/ ON or OFF	ON: Door lock switch is pushed/turned to UNLOCK position OFF: Door lock switch is not pushed/not turned to UNLOCK position	-
GLS BRK DETECT	Glass break sen detect/ ON or OFF	ON: Glass breakage sensor operates OFF: Glass breakage sensor does not operates	-

BODY NO.5 (Engine room J/B assembly):

Item	Measurement Item/ Display (Range)	Normal Condition	Diagnostic Note
HOOD COURTSY SW	Engine hood courtesy switch signal/ON or OFF	ON: Engine hood is OPEN OFF: Engine hood is CLOSED	-

2. ACTIVE TEST

HINT:

Performing the intelligent tester ACTIVE TEST allows relay, VSV, actuator and other items to be operated without removing any parts. Performing the ACTIVE TEST early in the troubleshooting process is one way to shorten labor time. The DATA LIST can be displayed during the ACTIVE TEST.

(a) Connect the intelligent tester (with CAN VIM) to the DLC3.
(b) Turn the ignition switch on (IG).
(c) Perform the ACTIVE TEST following to the display on the tester.

BODY (Multiplex Network body ECU):

Item	Tester Detail	Diagnostic Note
SECURITY INDIC	Security indicator light ON/OFF	-
HAZARD	Hazard warning light ON/OFF	-

BODY NO.5 (Engine room J/B assembly):

Item	Tester Detail	Diagnostic Note
SECURITY HORN	Security horn ON/OFF	-
HORN RELAY	Horn relay ON/OFF	-

ON-VEHICLE INSPECTION

1. OUTLINE OF THEFT DETERRENT SYSTEM

(a) When the theft deterrent system detects that the vehicle is being tampered with, the system sets off the alarm, causing the horns to sound and the lights to light up or blink in order to alert people around the vehicle to the theft.

(b) The theft deterrent system has 2 modes; one is the active arming mode and the other is passive arming mode. The passive arming mode can be switched ON/OFF using the specified method.

(c) Each mode has 4 states; a disarmed state, an arming preparation state, an armed state and an alarm sounding state.

(1) Disarmed state:
- The alarm function is not operating.
- The theft deterrent system is not operating.

(2) Arming preparation state:
- The time until the system goes into the armed state.
- The theft deterrent system is not operating.

(3) Armed state:
- The theft deterrent system is operating.

(4) Alarm sounding state:
- Alarm function is operating.

Alarm time:
Approx. 60 seconds

Refer to table below for alarm method and time:

Alarm Method	Headlight	Blinking
	Taillight	Blinking
	Hazard Warning Light	Blinking
	Interior Light	Illuminating
	Vehicle Horn	Sounding (approx. 0.4 second cycles)
	Security Horn	Sounding (approx. 0.4 second cycles)
	Door Lock Motor	Locking
Alarm Time	Approx. 60 sec.	

HINT:
If any of the doors are unlocked with no key in the ignition key cylinder during the armed state, a forced door lock signal will be output (see FORCED DOOR LOCK CONTROL). (without Smart key system)

2. ACTIVE ARMING MODE

HINT:
- Active arming mode starts the alarm control immediately after the doors are locked.
- This system activates as described in the diagram below when one of items for each condition is met.

(a) Active arming mode

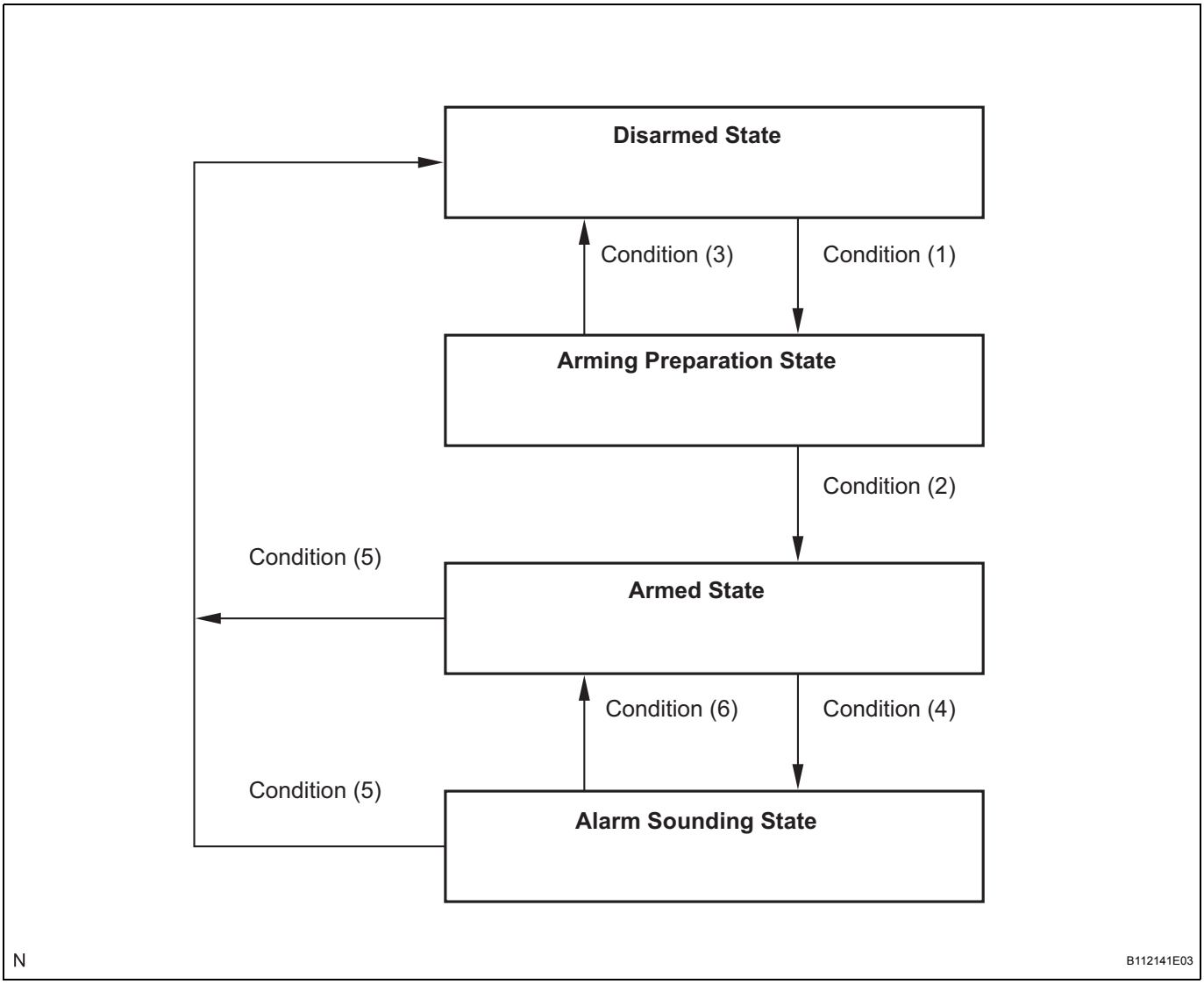

Condition	Item
Condition (1)	(No key in ignition key cylinder) 1. With all doors and engine hood closed, lock all doors by key operation. 2. With all doors and engine hood closed, lock all doors by wireless operation. 3. With any door open, close all doors and lock all doors by the key-less lock system.
Condition (2)	With all doors and engine hood closed, lock all doors. Allow approx. 30 sec. to elapse.
Condition (3)	1. Unlock any door by wireless operation. 2. Unlock any door by key operation. 3. Unlock any door. 4. Open any door. 5. Open engine hood. 6. Open luggage compartment door. 7. Insert key into ignition key cylinder. *1 8. Reconnect battery. 9. Turn ignition switch from off to on (IG). *2

Condition	Item
Condition (4)	1. Open engine hood. 2. Open luggage compartment door. 3. Reconnect battery. 4. Open any door. 5. Unlock any door without key and wireless operation. 6. The glass breakage sensor detects the sound of breaking glass from the 2nd time and afterward.
Condition (5)	1. Unlock any door by wireless operation. 2. Unlock any door by key operation. 3. Insert key into ignition key cylinder and turn ignition switch from off to on (IG). *1 4. Turn ignition switch from off to on (IG). *2
Condition (6)	After approx. 65 sec., alarm stops and system returns to armed state.

HINT:
- *1: without Smart key system
- *2: with Smart key system

3. PASSIVE ARMING MODE

HINT:
- Passive arming mode starts the alarm control after the key is removed from the ignition key cylinder and doors are closed. (without Smart key system)
- Passive arming mode can be switched ON/OFF by using the intelligent tester.
- The alarm is initially set (when shipped from factory) to active arming mode (not passive arming mode).
- During passive arming mode, the theft deterrent system goes into the armed state even if the doors are not locked.
- Detecting that the doors are unlocked does not set off the alarm during passive arming mode.
- A forced door lock signal is not output during passive arming mode (see FORCED DOOR LOCK CONTROL).
- Although the theft deterrent system detects that the doors are opened during passive arming mode, the alarm will not go off immediately because an entry delay time is set.
- If any of the following conditions is met during passive arming mode, the theft deterrent system will switch to active arming mode.
  - With all doors and engine hood closed, lock all doors by key operation.
  - With all doors and engine hood closed, lock all doors by wireless operation.
  - With any door open, close all doors and lock all doors by the key-less lock system.
- This system activates as described in the diagram below when one of items for each condition is met.

(a) Passive arming mode

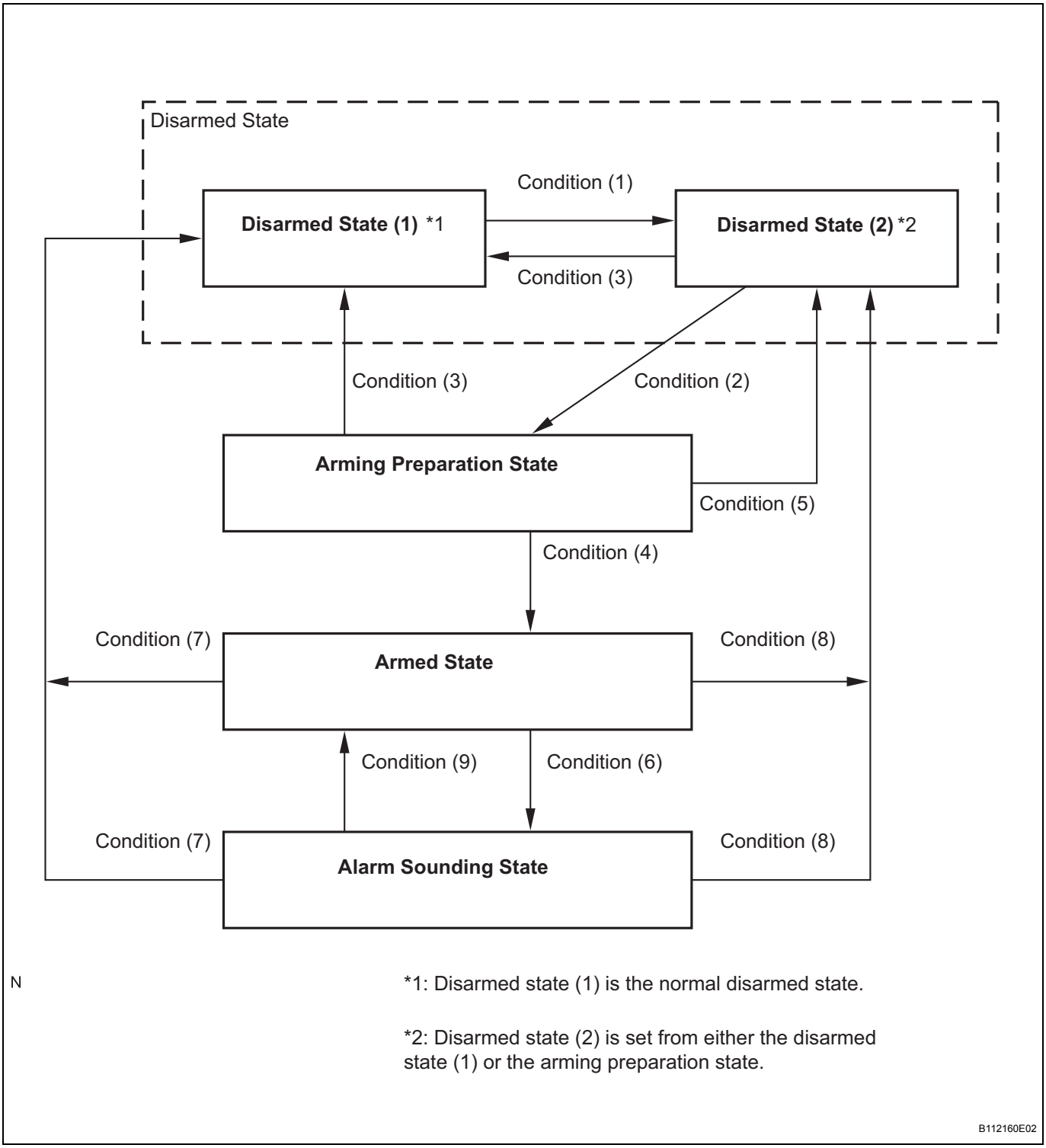

Condition	Item
Condition (1)	1. With ignition switch off, open any door or the engine hood, and pull key out of ignition key cylinder. *1 2. With ignition switch off, pull key out of ignition key cylinder, and open any door or the engine hood. *1 3. Turn the ignition switch off when any of the doors are open. *2 4. Open any of the doors with the ignition switch on (ACC) or off. *2
Condition (2)	All doors and engine hood are closed.

Condition	Item
Condition (3)	1. Unlock any door by wireless operation. 2. Insert key into ignition key cylinder. *1 3. Reconnect battery. 4. Turn ignition switch from off to on (ACC or IG). *1 5. Turn the ignition switch on (IG) to off. *2 6. Unlock any door by key operation.
Condition (4)	With all doors and engine hood closed, allow approx. 30 sec. to elapse.
Condition (5)	1. Open any door. 2. Open engine hood. 3. Open luggage compartment door. 4. Unlock luggage compartment door by key operation.
Condition (6)	1. Open any door and allow entry delay time *3 to elapse. 2. Open engine hood. 3. Open luggage compartment door. 4. Reconnect battery.
Condition (7)	1. Unlock any door by wireless operation. 2. Unlock any door by key operation. 3. Insert key into ignition key cylinder and turn ignition switch from off to on (IG). *1 4. Turn the ignition switch on (ACC or IG) within 7 seconds after turning it off. *2
Condition (8)	1. Open luggage compartment door by wireless operation. 2. Unlock luggage compartment door by key operation.
Condition (9)	After approx. 65 sec., alarm stops and system returns to armed state.

HINT:

- *1: without Smart key system
- *2: with Smart key system
- *3: When any door is opened while all the doors are closed during passive arming mode, the entry delay time starts. If the switch condition (armed state → disarmed state (1) or (2)) is met during the entry delay time, the theft deterrent system will return to disarmed state (1) or (2). However, if the switch condition for disarmed state (1) or (2) is not met, the set off the alarm. Entry delay time of 0, 14 or 30 sec. can be selected by the customizing function.

4. FORCED DOOR LOCK CONTROL

(a) The forced door lock control prevents the vehicle from being tampered with. Immediately after a door is unlocked (alarm starts), the door is forced to lock by a forced door lock signal.

(1) Conditions that force the doors to lock:
No key is in the ignition key cylinder and both of the following conditions are met. (without Smart key system)

- The theft deterrent system is in the armed state od active arming mode.
- All the doors are locked.

5. ALARM MEMORY FUNCTION

(a) If the alarm is set off (tampering is detected) while the theft deterrent system is armed, it will be recorded by the alarm memory function. Whenever you cancel the theft deterrent system, the alarm memory function causes the taillights to light up for 2 seconds in order to inform you that the alarm has been set off.

(1) Conditions of the alarm memory function that cause the taillights to light up:
When the theft deterrent system has entered into the alarm sounding state (tampering has been detected) even once, the taillights will light up for 2 seconds if any of the following conditions is met.
- Switched to the disarmed state from the armed state during active arming mode.
- Switched to the disarmed state (1) from the armed state during passive arming mode.

HINT:
Active arming mode: See ACTIVE ARMING MODE
Passive arming mode: See PASSIVE ARMING MODE

6. PANIC ALARM CONTROL

(a) The panic alarm control makes it possible to voluntarily set off the panic alarm by pressing the PANIC switch on the wireless transmitter. However, this control operates independently from the alarm control by the theft deterrent system (switched to the alarm sounding state from the armed state).

(1) Conditions that cause the panic alarm control to set off the panic alarm:
The panic alarm control sets off the panic alarm by pressing the PANIC switch on the wireless transmitter under the following conditions:
- The ignition switch is off.
- The theft deterrent system is not in the alarm sounding state. (This condition is common both to active arming mode and to passive arming mode.)
- The panic alarm control is not operating (the alarm is not set off).

(2) Conditions that cause the panic alarm control to shut off the alarm:
The panic alarm control shuts off the panic alarm when any of the following conditions is met during panic alarm operation:
- The ignition switch is on (IG) position.
- The panic alarm switch is turned on again.
- Any of the switches on the wireless transmitter (LOCK/UNLOCK or LUGGAGE OPEN) is pressed.

- The panic alarm ends (60 sec. have passed).
- The theft deterrent system switches to the alarm sounding state. Under this condition, the theft deterrent system is controlling the alarm rather than the panic alarm control. In order to cancel this alarm, refer to the theft deterrent system alarm sounding state cancellation procedure. (This condition is common both to active arming mode to passive mode.)

HINT:
Active arming mode: See ACTIVE ARMING MODE
Passive arming mode: See PASSIVE ARMING MODE

7. SECURITY INDICATOR OUTPUT

(a) The main body ECU outputs a signal to light up the security indicator, according to the state of the theft deterrent system. However, some of the actual lighting conditions of the security indicator are different from the output signals of the main body ECU.

Output:

State of Theft Deterrent System*	Security Indicator	
	Output Signals from Body ECU	Actual Lighting Condition
Disarmed state (1), (2)	OFF	OFF (Immobiliser system unset) BLINKING (Immobiliser system set)
Arming preparation state	ON	ON
Armed state	OFF	BLINKING
Alarm sounding state	ON	ON

Blinking cycle:

Time	Security Indicator
0.2 sec.	ON
1.8 sec.	OFF

HINT:

- *: The above condition is common both to active arming mode and to passive arming mode.
- When the immobiliser system is set, the security indicator blinks during both the disarmed state and the armed state, due to the output signals from the immobiliser system.

Engine Hood Courtesy Switch Circuit

DESCRIPTION

The engine hood courtesy switch is installed together with the hood lock. This switch turns on when the engine hood is opened and turns off when the engine hood is closed.

TD

WIRING DIAGRAM

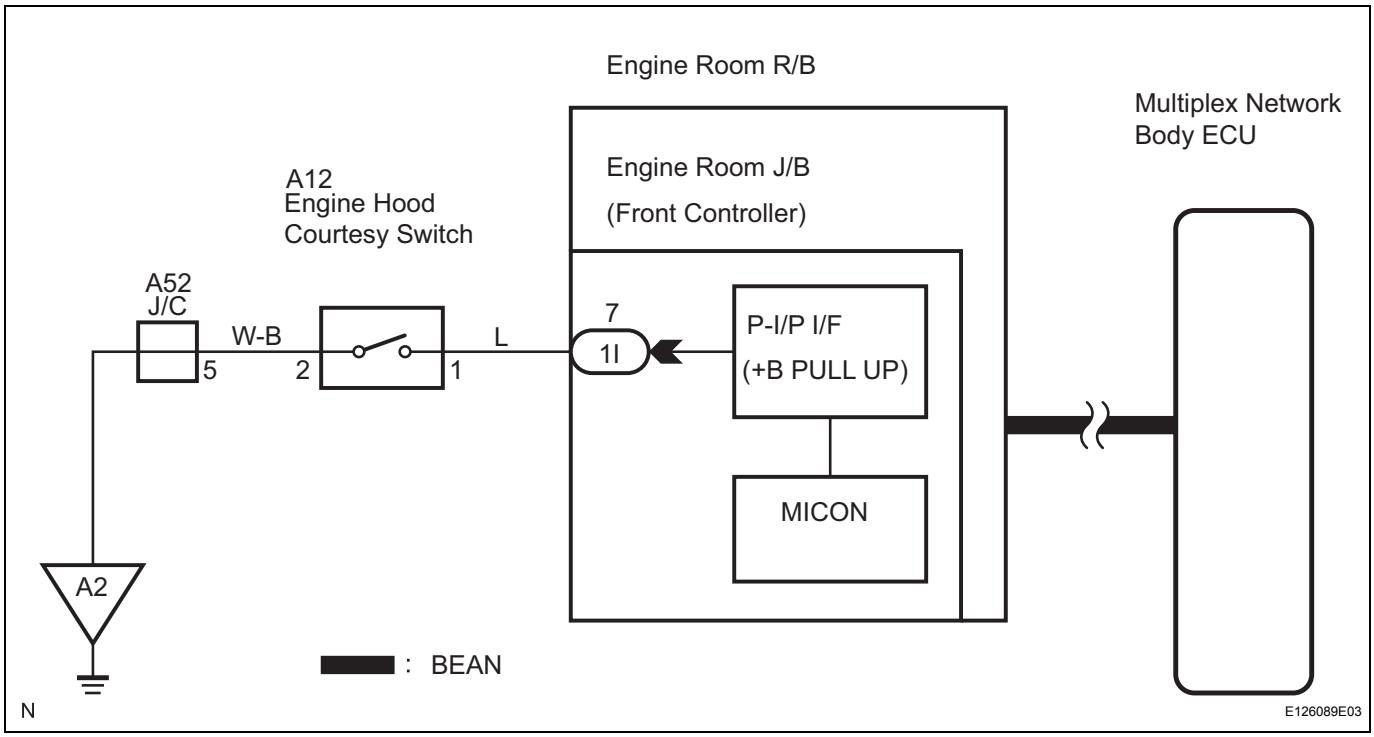

INSPECTION PROCEDURE

1	READ VALUE OF INTELLIGENT TESTER

(a) Connect the intelligent tester (with CAN VIM) to the DLC3.
(b) Turn the ignition switch on (IG).
(c) Press the intelligent tester main switch on.
(d) Select the item below in the DATA LIST and then check that the indicator operates.

BODY NO.5 (Engine room J/B assembly):

Item	Test Details	Diagnostic Note
HOOD COURTSY SW	Engine hood courtesy switch signal / ON or OFF	-

OK:

The indicator on the tester switches between ON and OFF in accordance with the engine hood courtesy switch status.

NG	Go to step 2

OK

PROCEED TO NEXT CIRCUIT INSPECTION SHOWN IN PROBLEM SYMPTOMS TABLE

2 INSPECT ENGINE HOOD COURTESY SWITCH

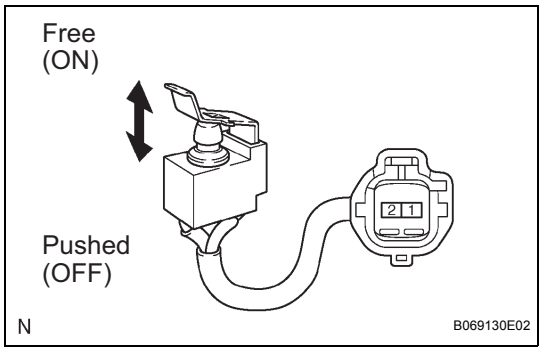

(a) Remove the courtesy switch from the hood lock.
(b) Check the switch resistance.

Standard resistance

Tester Connection	Switch Position	Specified Condition
1 - 2	Pushed (OFF)	10 kΩ or higher
	Free (ON)	Below 1 Ω

NG → **REPLACE ENGINE HOOD COURTESY SWITCH**

OK

3 CHECK WIRE HARNESS (ENGINE ROOM J/B ASSEMBLY - ENGINE HOOD COURTESY SWITCH)

Wire Harness Side Connector Front View:

1I
Engine Room J/B Assembly

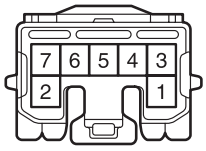

A12
Engine Hood Courtesy Switch



N
E126090E01

(a) Disconnect the 1I J/B connector.
(b) Disconnect the A12 switch connector.
(c) Check the resistance between the wire harness side connectors.

Standard resistance

Tester Connection	Specified Condition
1I-7 - A12-1	Below 1 Ω
1I-7 or A12-1 - Body ground	10 kΩ or higher

NG → **REPAIR OR REPLACE HARNESS OR CONNECTOR**

OK

4	CHECK WIRE HARNESS (ENGINE HOOD COURTESY SWITCH - BODY GROUND)

Wire Harness Side Connector Front View:

A12
Engine Hood Courtesy Switch



N E126091E01

(a) Disconnect the A12 switch connector.
(b) Check the resistance between the wire harness side connector and the body ground.

Standard resistance

Tester Connection	Specified Condition
A12-2 - Body ground	Below 1 Ω

NG → **REPAIR OR REPLACE HARNESS OR CONNECTOR**

OK

REPLACE ENGINE ROOM JUNCTION BLOCK ASSEMBLY

Horn Circuit

DESCRIPTION

When the theft deterrent system is switched from the armed state to the alarm sounding state, the multiplex network body ECU transmits a signal to cause the horn to sound at intervals of 0.4 seconds.

WIRING DIAGRAM

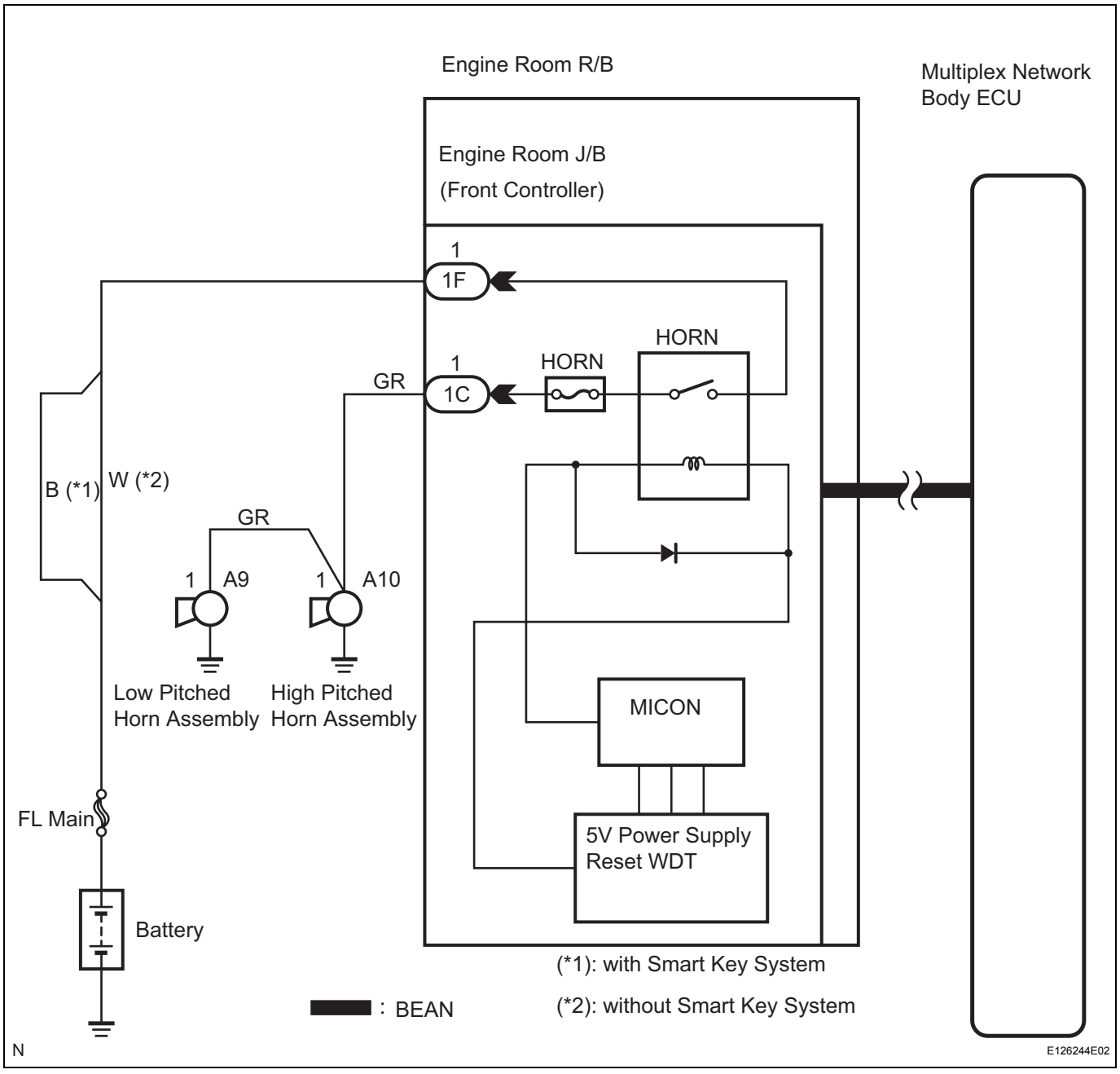

INSPECTION PROCEDURE

1	PERFORM ACTIVE TEST BY INTELLIGENT TESTER

(a) Connect the intelligent tester (with CAN VIM) to the DLC3.

(b) Turn the ignition switch on (IG).
(c) Press the intelligent tester main switch on.
(d) Select the item below in the ACTIVE TEST and then check that the indicator operates.

BODY NO.5 (Engine room J/B assembly):

Item	Test Details	Diagnostic Note
HORN RELAY	Horn relay ON/OFF	-

TD

OK:
The horn sounds or stops correctly when operating it through the intelligent tester.

NG → **Go to step 2**

OK

PROCEED TO NEXT CIRCUIT INSPECTION SHOWN IN PROBLEM SYMPTOMS TABLE

2 INSPECT FUSE (HORN)

(a) Remove the HORN fuse from the engine room R/B and J/B.
(b) Check the resistance.
Standard resistance:
Below 1 Ω

NG → **REPLACE FUSE**

OK

3 CHECK WIRE HARNESS (ENGINE ROOM J/B - BATTERY)

Connector Wire Harness View:

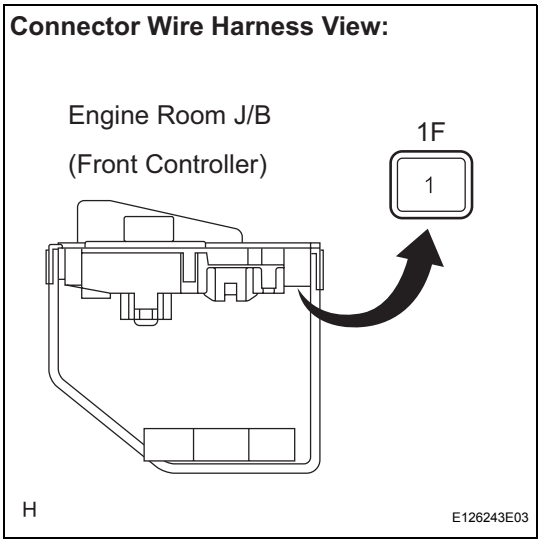

(a) Disconnect 1F J/B connector.
(b) Measure the voltage of the wire harness side connector.

Terminal No.	Specified Condition
1F-1 - Body ground	10 to 14 V

NG → **REPAIR OR REPLACE HARNESS OR CONNECTOR**

OK

4 INSPECT HORN ASSEMBLY

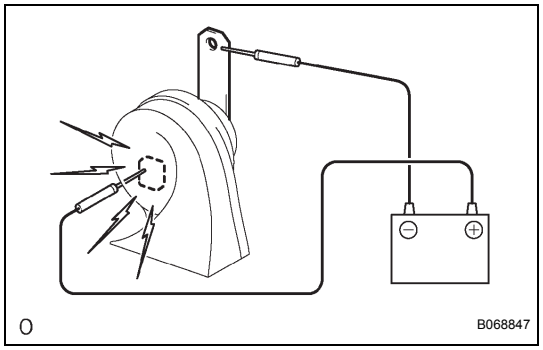

(a) Low pitched horn:
(1) Apply battery voltage and check operation of the low pitched horn.
OK

Measurement Condition	Specified Condition
Battery positive (+) → Terminal 1 Battery negative (-) → Horn body	Horn sounds

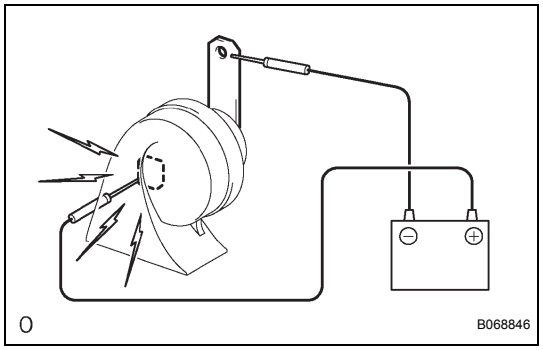

(b) High pitched horn:
(1) Apply battery voltage and check operation of the high pitched horn.
OK

Measurement Condition	Specified Condition
Battery positive (+) → Terminal 1 Battery negative (-) → Horn body	Horn sounds

NG → **REPLACE HORN ASSEMBLY**

OK

5 CHECK WIRE HARNESS (ENGINE ROOM J/B - HORN ASSEMBLY)

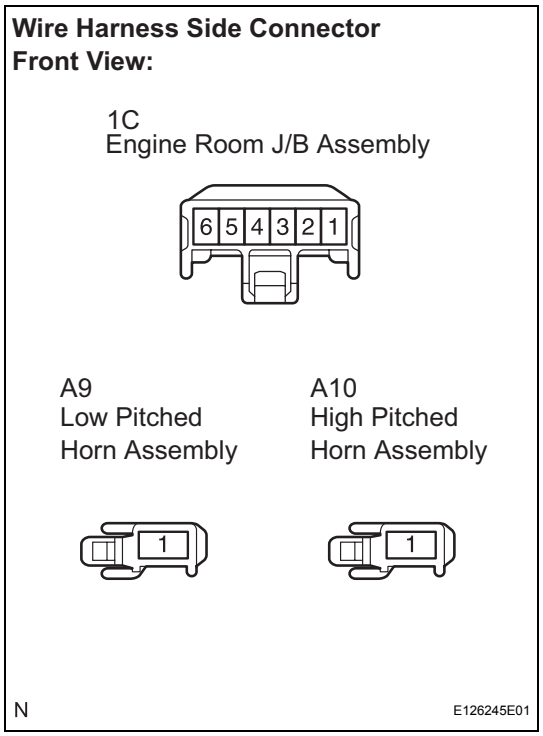

(a) Disconnect 1C J/B connector.
(b) Disconnect A9 or A10 horn connector.
(c) Check the resistance between the wire harness side connectors.
Standard resistance

Terminal No.	Specified Condition
1C-1 - A9-1	Below 1 Ω
1C-1 - A10-1	Below 1 Ω
1C-1 or A9-1 - Body ground	10 kΩ or higher
1C-1 or A10-1 - Body ground	10 kΩ or higher

NG → **REPAIR OR REPLACE HARNESS OR CONNECTOR**

OK

REPLACE ENGINE ROOM JUNCTION BLOCK ASSEMBLY

Security Horn Circuit

DESCRIPTION

When the theft deterrent system is operating, the relay in the multiplex network body ECU turns on and off in a cycle of 0.4 seconds, causing the security horn to sound.

WIRING DIAGRAM

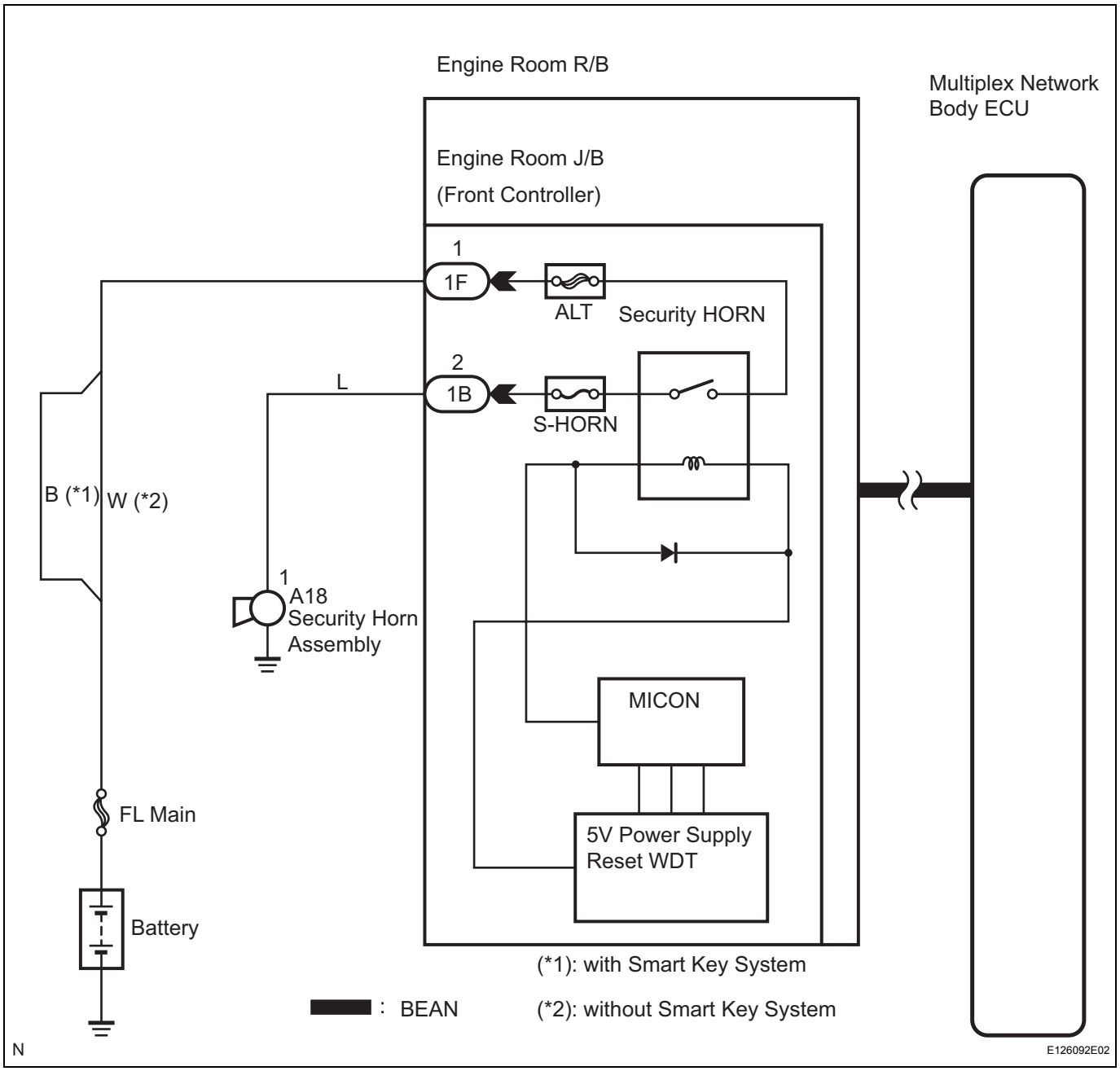

INSPECTION PROCEDURE

1	PERFORM ACTIVE TEST BY INTELLIGENT TESTER

(a) Connect the intelligent tester (with CAN VIM) to the DLC3.

(b) Turn the ignition switch on (IG).
(c) Press the intelligent tester main switch on.
(d) Select the item below in the ACTIVE TEST and then check that the indicator operates.

BODY NO.5 (Engine room J/B assembly):

Item	Test Details	Diagnostic Note
SECURITY HORN	Security horn ON/OFF	-

TD

OK:
The security horn sounds or stops correctly when operating it through the intelligent tester.

NG → **Go to step 2**

OK

PROCEED TO NEXT CIRCUIT INSPECTION SHOWN IN PROBLEM SYMPTOMS TABLE

2 INSPECT FUSE (S-HORN)

(a) Remove the S-HORN fuse from the engine room R/B and J/B.
(b) Check the resistance.
Standard resistance:
Below 1 Ω

NG → **REPLACE FUSE**

OK

3 INSPECT SECURITY HORN ASSEMBLY

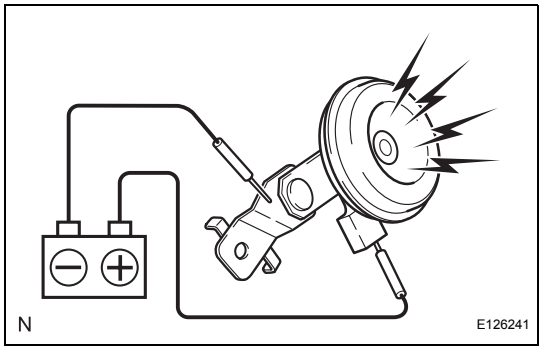

(a) Check operation of the horn.
Standard resistance

Measurement Condition	Specified Condition
Battery positive (+) → Terminal 1 Battery negative (-) → Horn body	Horn sounds

NG → **REPAIR OR REPLACE SECURITY HORN ASSEMBLY**

OK

4	CHECK WIRE HARNESS (ENGINE ROOM J/B ASSEMBLY - SECURITY HORN ASSEMBLY)

Wire Harness Side Connector Front View:

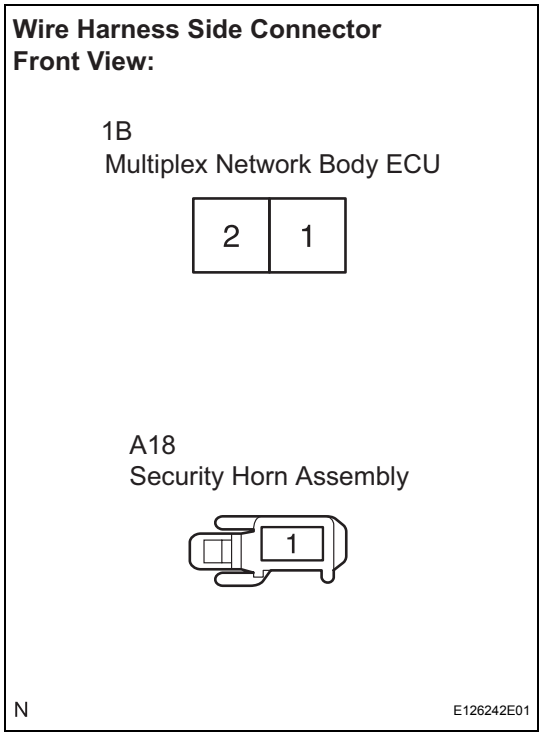

(a) Disconnect the 1B J/B connector.
(b) Disconnect the A18 horn connector.
(c) Check the resistance between the wire harness side connectors.

Standard resistance

Terminal No.	Specified Condition
1B-2 - A18-1	Below 1 Ω
1B-2 or A18-1 - Body ground	10 kΩ or higher

NG → **REPAIR OR REPLACE HARNESS OR CONNECTOR**

OK

5	CHECK WIRE HARNESS (ENGINE ROOM J/B - BATTERY)

Wire Harness Side Connector Front View:

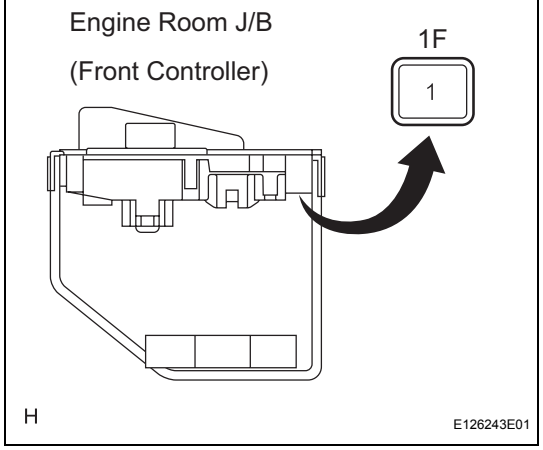

(a) Disconnect 1F J/B connector.
(b) Measure the voltage of the wire harness side connector.

Standard voltage

Terminal No.	Specified Condition
1F-1 - Body ground	10 to 14 V

NG → **REPAIR OR REPLACE HARNESS OR CONNECTOR**

OK

REPLACE ENGINE ROOM JUNCTION BLOCK ASSEMBLY

Ignition Switch Circuit

DESCRIPTION

When the ignition switch is on (IG) position, battery positive voltage is applied to terminal IG of the multiplex network body ECU.

TD

WIRING DIAGRAM

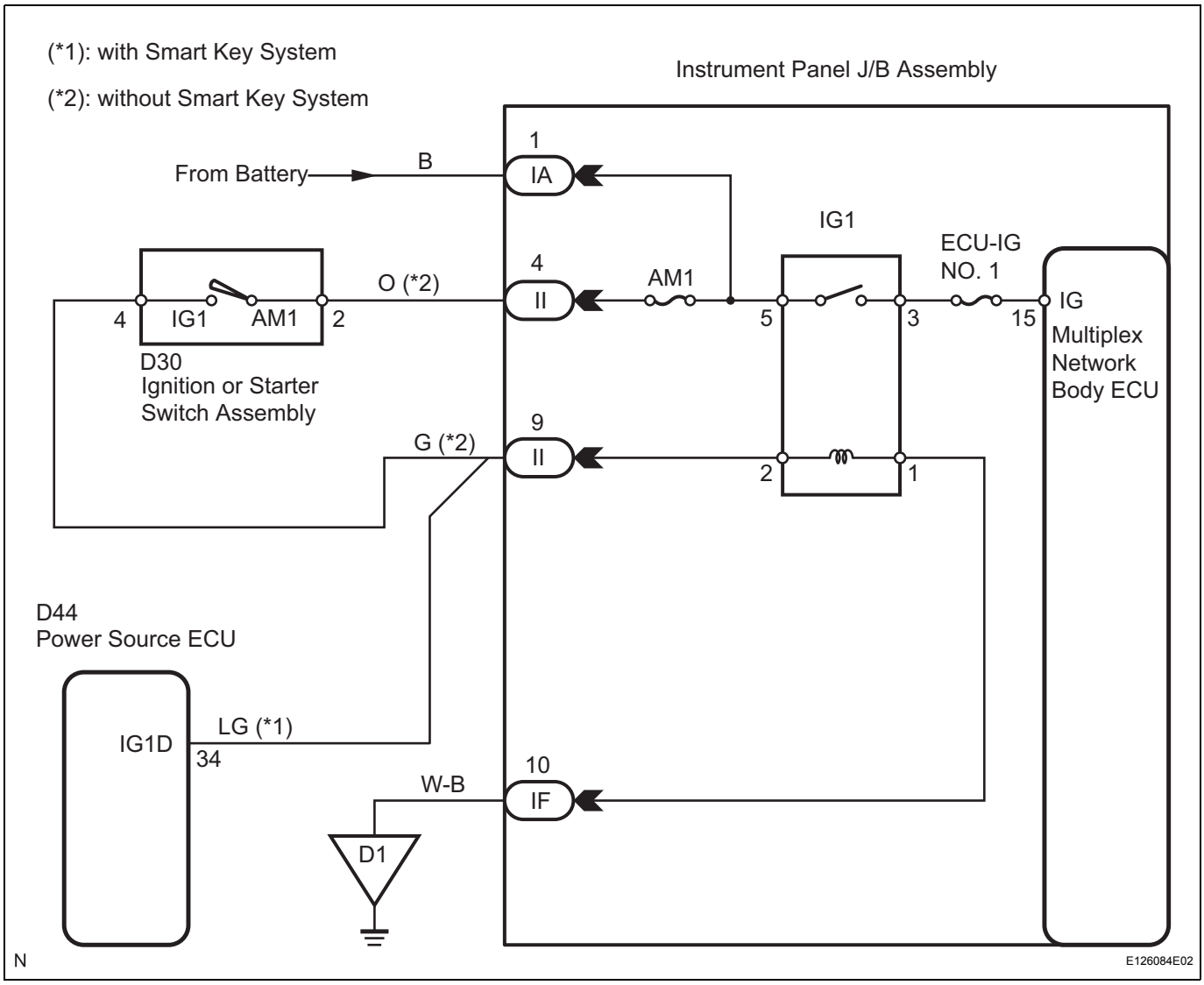

INSPECTION PROCEDURE

1	READ VALUE OF INTELLIGENT TESTER

(a) Connect the intelligent tester (with CAN VIM) to the DLC3.
(b) Turn the ignition switch on (IG).
(c) Press the intelligent tester main switch on.

(d) Select the item below in the DATA LIST and then check that the indicator operates.

BODY (Multiplex network body ECU):

Item	Test Details	Diagnostic Note
IG SW	Ignition switch signal ON/OFF	-

OK:

When turning the ignition switch on and off, the intelligent tester display changes between "ON" and "OFF".

NG → **Go to step 2**

OK

PROCEED TO NEXT CIRCUIT INSPECTION SHOWN IN PROBLEM SYMPTOMS TABLE

2 CHECK SMART KEY SYSTEM

(a) Choose the system to be inspected.

Apparatus	Go to step
without smart key system	A
with smart key system	B

B → **Go to step 9**

A

3 INSPECT FUSE (ECU-IG, AM1)

(a) Remove the ECU-IG and AM1 fuses from the instrument panel J/B.

(b) Check the resistance.

Standard resistance:

Below 1 Ω

NG → **REPLACE FUSE**

OK

TD

4	INSPECT RELAY (IG1)

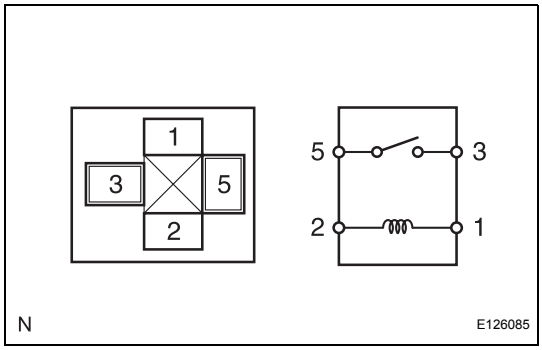

(a) Remove the IG1 relay from the instrument panel J/B.
(b) Check the resistance of the IG1 relay.
Standard resistance

Tester Connection	Specified Condition
3 - 5	10 kΩ or higher
3 - 5	Below 1 Ω (When battery voltage is applied to terminals 1 and 2)

NG → REPLACE RELAY

OK

5	CHECK WIRE HARNESS (POWER SOURCE)

Wire Harness Side Connector Front View:

IA
Instrument Panel J/B Assembly

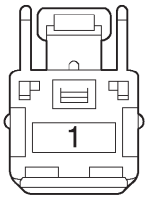

(a) Disconnect the IA J/B connector.
(b) Check the voltage between the wire harness side connector and the body ground.
Standard voltage

Tester Connection	Condition	Specified Condition
IA-1 - Body ground	Always	10 to 14 V

NG → REPAIR OR REPLACE HARNESS OR CONNECTOR (POWER SOURCE)

OK

6	CHECK WIRE HARNESS (MULTIPLEX NETWORK BODY ECU) - BODY GROUND)

Wire Harness Side Connector Front View:

IF
Instrument Panel J/B Assembly

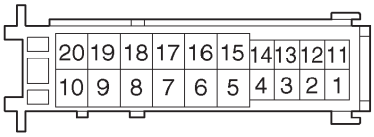

(a) Disconnect the IF J/B connector.
(b) Check the resistance between the wire harness side connector and the body ground.
Standard resistance

Tester Connection	Specified Condition
IF-10 - Body ground	Below 1 Ω

NG → REPAIR OR REPLACE HARNESS OR CONNECTOR

OK

7 INSPECT IGNITION OR STARTER SWITCH ASSEMBLY

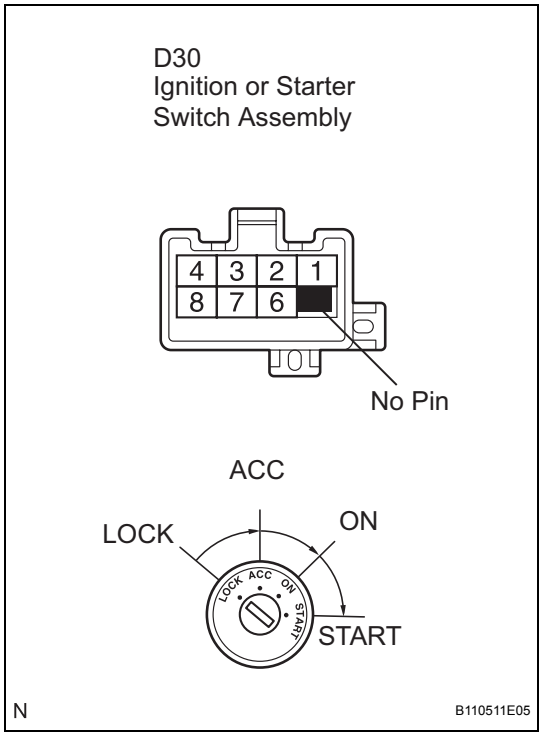

(a) Disconnect the connector from the ignition or starter switch.
(b) Check the switch resistance.

Standard resistance

Tester Connection	Condition	Specified Condition
2 - 4	ON	Below 1 Ω

TD

NG → **REPLACE IGNITION OR STARTER SWITCH ASSEMBLY**

OK

8 CHECK WIRE HARNESS (INSTRUMENT PANEL J/B ASSEMBLY - IGNITION OR STARTER SWITCH)

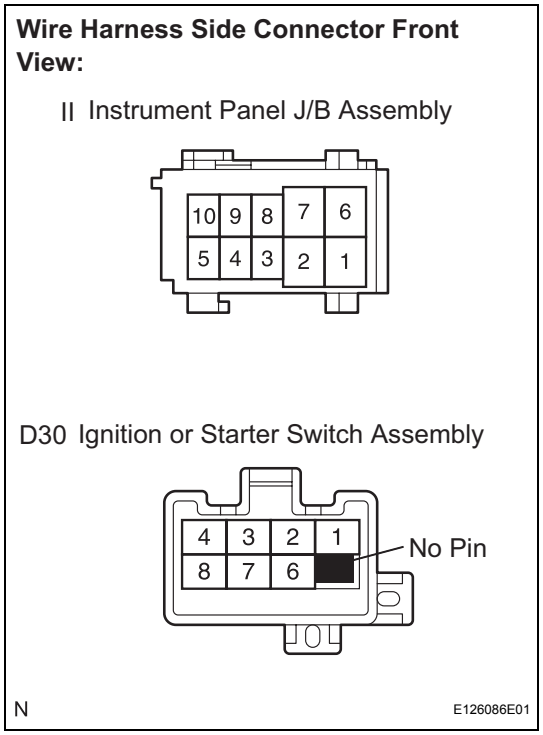

(a) Disconnect the II J/B connector.
(b) Disconnect the D30 switch connector.
(c) Check the resistance between the wire harness side connectors.

Standard resistance

Symbol (Tester Connection)	Specified Condition
II-9 - D30-4	Below 1 Ω
II-9 - Body ground	10 kΩ or higher

NG → **REPAIR OR REPLACE HARNESS OR CONNECTOR**

OK

REPLACE INSTRUMENT PANEL JUNCTION BLOCK ASSEMBLY

TD

9 INSPECT FUSE (ECU-IG)

(a) Remove the ECU-IG fuse from the instrument panel J/B.
(b) Check the resistance.
Standard resistance:
Below 1 Ω

NG → **REPLACE FUSE**

OK

10 INSPECT RELAY (IG1)

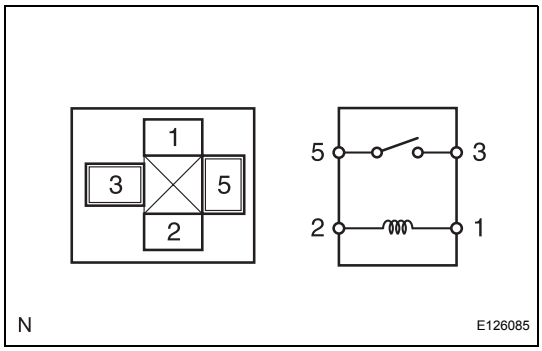

(a) Remove the IG1 relay from the instrument panel J/B.
(b) Check the resistance of the IG1 relay.
Standard resistance

Tester Connection	Specified Condition
3 - 5	10 kΩ or higher
3 - 5	Below 1 Ω (When battery voltage is applied to terminals 1 and 2)

NG → **REPLACE RELAY**

OK

11 CHECK INSTRUMENT PANEL JUNCTION BLOCK ASSEMBLY (MULTIPLEX NETWORK BODY ECU - BODY GROUND) (POWER SOURCE)

Wire Harness Side Connector Front View:

IA
Instrument Panel J/B Assembly

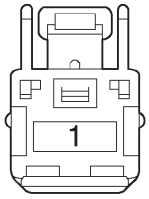

(a) Disconnect the IA J/B connector.
(b) Check the voltage between the wire harness side connector and the body ground.
Standard resistance

Tester Connection	Condition	Specified Condition
IA-1 - Body ground	Always	10 to 14 V

NG → **REPAIR OR REPLACE HARNESS OR CONNECTOR (POWER SOURCE)**

OK

12	CHECK WIRE HARNESS (MULTIPLEX NETWORK BODY ECU - BODY GROUND)

Wire Harness Side Connector Front View:

IF
Instrument Panel J/B Assembly

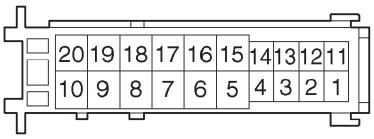

B069992E05

(a) Disconnect the IF J/B connector.
(b) Check the resistance between the wire harness side connector and the body ground.

Standard resistance

Tester Connection	Specified Condition
IF-10 - Body ground	Below 1 Ω

NG → **REPAIR OR REPLACE HARNESS OR CONNECTOR (GROUND CIRCUIT)**

OK

13	CHECK WIRE HARNESS (INSTRUMENT PANEL J/B - INSTRUMENT PANEL J/B)

Wire Harness Side Connector Front View:

II
Instrument Panel J/B Assembly

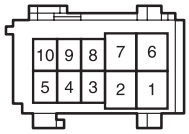

N

E126087E01

(a) Disconnect the II J/B connector.
(b) Check the resistance of the wire harness side connectors.

Standard resistance

Tester Connection	Switch Position	Specified Condition
II-4 - II-9	Ignition switch ON	Below 1 Ω

NG → **Go to step 14**

OK

REPLACE INSTRUMENT PANEL JUNCTION BLOCK ASSEMBLY

14	CHECK WIRE HARNESS (INSTRUMENT PANEL J/B ASSEMBLY - POWER SOURCE ECU)

Wire Harness Side Connector Front View:

II
Instrument Panel J/B Assembly

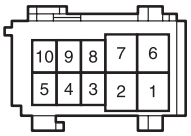

D44
Power Source ECU

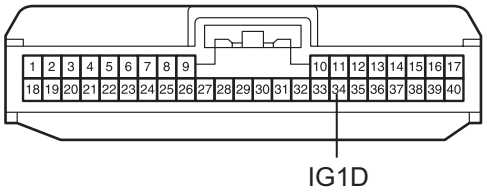

N E126088E01

(a) Disconnect the II J/B connector.
(b) Disconnect the D44 ECU connector.
(c) Check the resistance between the wire harness side connectors.

Standard resistance

Symbol (Tester Connection)	Specified Condition
(II-9) - IG1D (D44-34)	Below 1 Ω
(II-9) - Body ground	10 kΩ or higher

NG → **REPAIR OR REPLACE HARNESS OR CONNECTOR**

OK

GO TO SMART KEY SYSTEM

Security Indicator Light Circuit

DESCRIPTION

Even when the theft deterrent system is in the disarmed state, the security indicator flashes due to a signal output from the immobiliser system. The security indicator flashes continuously due to a continuous signal received from the immobiliser system while in the armed state.
The multiplex network body ECU causes the security indicator to light up or blink only during the arming preparation state and alarm sounding states.

WIRING DIAGRAM

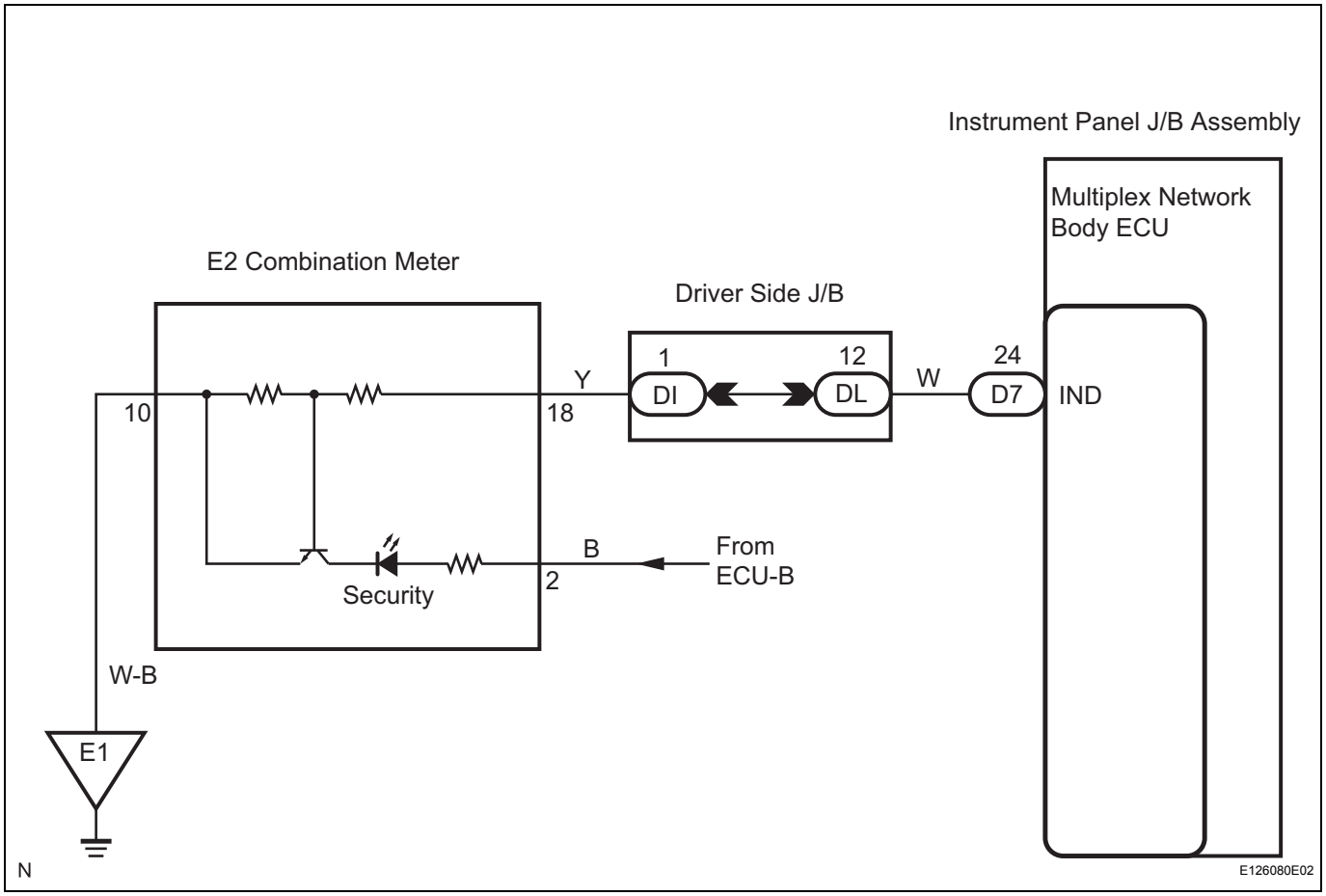

INSPECTION PROCEDURE

1	PERFORM ACTIVE TEST BY INTELLIGENT TESTER

(a) Connect the intelligent tester (with CAN VIM) to the DLC3.
(b) Turn the ignition switch on (IG).
(c) Press the intelligent tester main switch on.
(d) Select the item below in the ACTIVE TEST and then check that the indicator operates.

BODY (Multiplex network body ECU):

Item	Test Details	Diagnostic Note
SECURITY INDIC	Security indicator ON/OFF	-

OK:

The security indicator light flashes or goes off correctly when operating it through the intelligent tester.

NG → **Go to step 2**

OK

TD

PROCEED TO NEXT CIRCUIT INSPECTION SHOWN IN PROBLEM SYMPTOMS TABLE

2 INSPECT COMBINATION METER ASSEMBLY

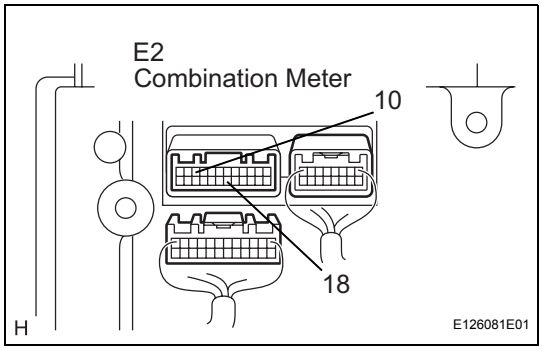

(a) Remove the E2 combination meter assembly.
(b) Apply 12 V positive voltage between the terminals of the indicator, and check the lighting condition of the security indicator.

OK

Measurement Condition	Specified Condition
Battery positive (+) → Terminal 18 and 2 Battery negative (-) → Terminal 10	Illuminates

NOTICE:

- **If the positive (+) lead and the negative (-) lead are incorrectly connected, the security indicator does not illuminate.**
- **Voltage of more than 12 V will damage the security indicator.**
- **If the voltage is too low, the security indicator will not illuminate.**

NG → **REPLACE COMBINATION METER ASSEMBLY**

OK

3 CHECK WIRE HARNESS (POWER SOURCE)

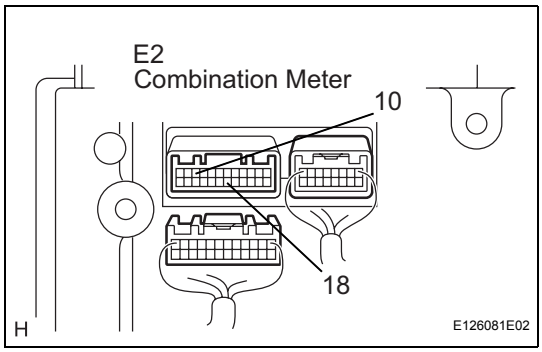

(a) Remove the E2 combination meter assembly.
(b) Check the voltage between wire harness side connector and body ground.

Standard resistance

Tester Connection	Condition	Specified Condition
E2-2 - Body ground	Always	10 to 14 V

NG → **REPAIR OR REPLACE HARNESS OR CONNECTOR (POWER SOURCE)**

OK

4	CHECK WIRE HARNESS (COMBINATION METER - MULTIPLEX NETWORK BODY ECU - BODY GROUND)

Wire Harness Side Connector Front View:

D7
Multiplex Network Body ECU

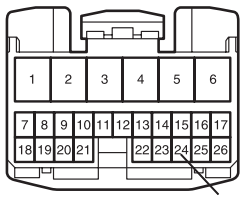

E2
Combination Meter

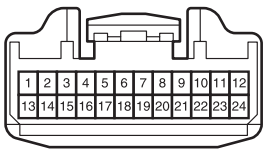

N E126082E02

(a) Disconnect the D7 ECU connector.
(b) Disconnect the E2 meter connector.
(c) Measure the resistance of the wire harness side connectors.

Resistance

Symbol (Tester Connection)	Specified Condition
(E2-18) - IND (D7-24)	Below 1 Ω
(E2-18) - Body ground	10 kΩ or higher
(E2-10) - Body ground	Below 1 Ω

NG → **REPAIR OR REPLACE HARNESS OR CONNECTOR**

OK

REPLACE INSTRUMENT PANEL J/B ASSEMBLY

TD

Glass Breakage Sensor Circuit

DESCRIPTION

When the glass breakage sensor detects the glass is broken (1st time), the sensor will set off an alarm for 20 seconds (pre-alarm). If the glass breakage sensor detects that more glass is broken (a 2nd time or more), the sensor will set off an alarm for 60 seconds.

WIRING DIAGRAM

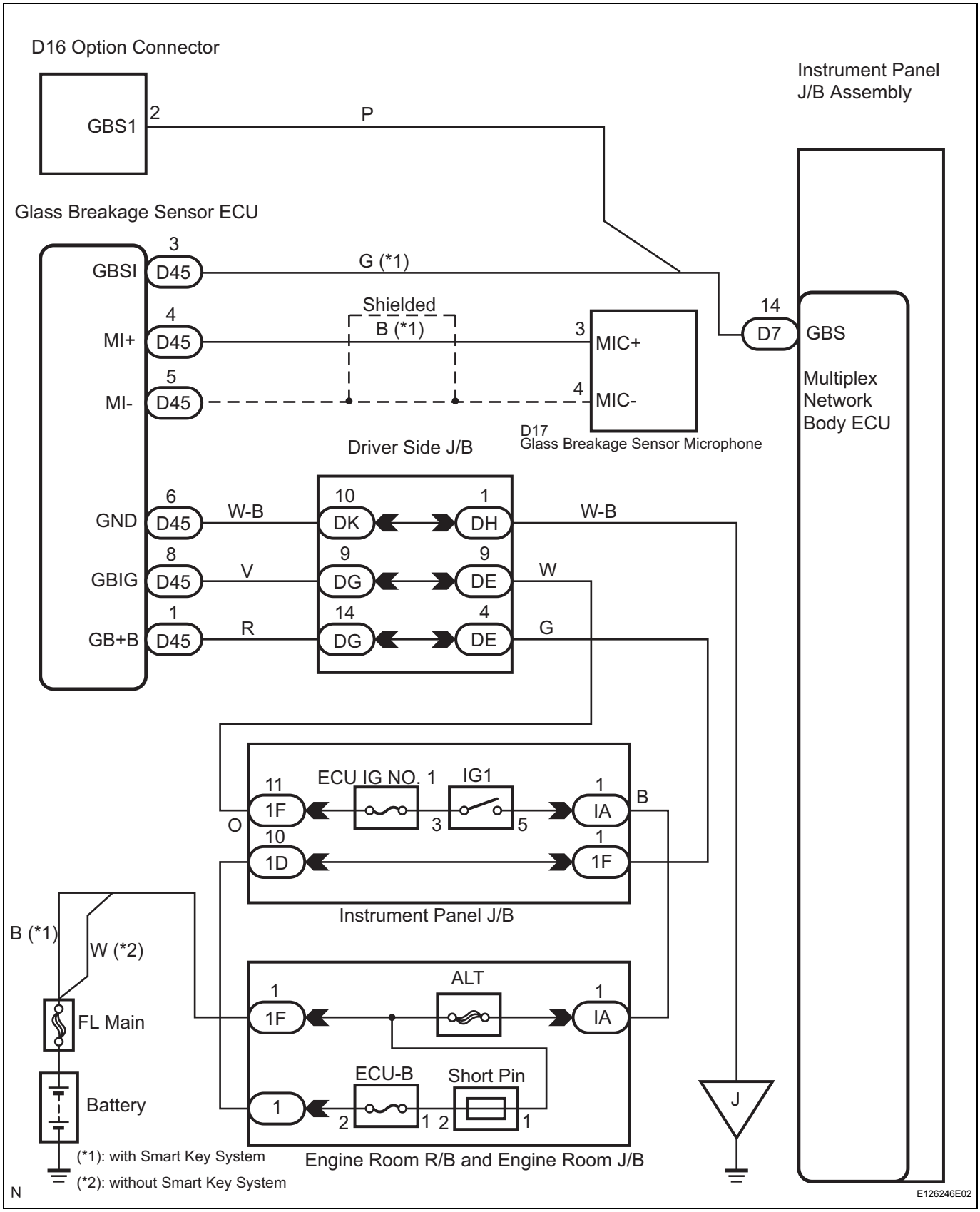

INSPECTION PROCEDURE

1	READ VALUE OF INTELLIGENT TESTER

(a) Connect the intelligent tester (with CAN VIM) to the DLC3.
(b) Turn the ignition switch on (IG).
(c) Press the intelligent tester main switch on.
(d) Select the item below in the DATA LIST and then check that the indicator operates.

BODY (Multiplex network body ECU):

Item	Test Details	Diagnostic Note
GLS BRK DETECT	Glass Break Sen Detect / ON or OFF	-

OK:
When tapping on the glass with your finger, "ON" is displayed on the intelligent tester screen.

NG → **Go to step 2**

OK

PROCEED TO NEXT CIRCUIT INSPECTION SHOWN IN PROBLEM SYMPTOMS TABLE

2	INSPECT GLASS BREAKAGE SENSOR ECU

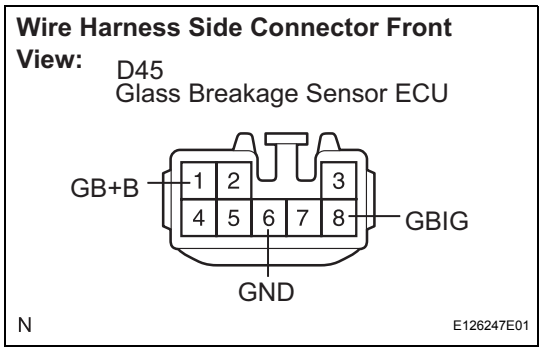

(a) Disconnect the D45 glass breakage sensor ECU connector.
(b) Check the voltage between the wire harness side connectors.

Standard voltage

Symbol (Tester Connection)	Condition	Specified Condition
GB+B (D45-1) - GND (D45-6)	Always	10 to 14 V
GBIG (D45-8) - GND (D45-6)	Ignition Switch on (IG)	10 to 14 V

NG → **REPAIR OR REPLACE HARNESS OR CONNECTOR**

OK

3	CHECK WIRE HARNESS (BODY ECU - GLASS BREAKAGE SENSOR ECU - OPTION CONNECTOR)

Wire Harness Side Connector Front View:

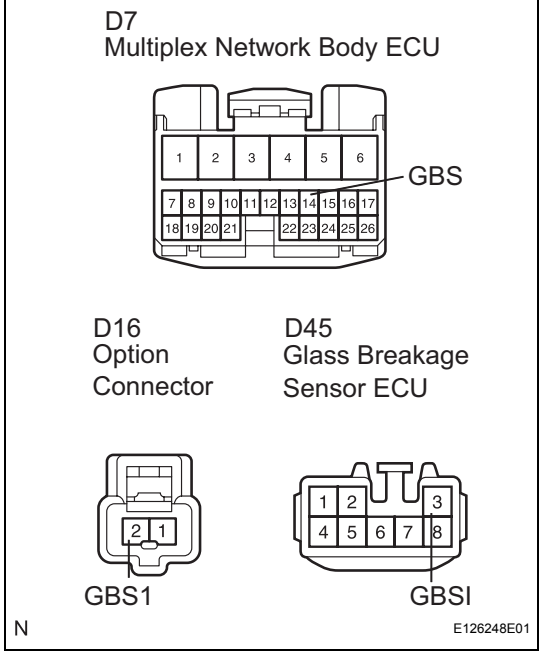

(a) Disconnect the D7 body ECU connector.
(b) Disconnect the D45 GBS ECU connector and D16 option connector.
(c) Check the resistance between the wire harness side connectors.

Standard Resistance

Symbol (Terminal No.)	Specified Condition
GBS (D7-14) - GBSI (D45-3)	Below 1 Ω
GBS (D7-14) - GBS1 (D16-2)	Below 1 Ω
GBS (D7-14) or GBSI (D45-3) - Body ground	10 kΩ or higher
GBS (D7-14) or GBS1 (D16-2) - Body ground	10 kΩ or higher

NG → **REPAIR OR REPLACE HARNESS OR CONNECTOR**

OK

4	CHECK WIRE HARNESS (GLASS BREAKAGE SENSOR ECU - GLASS BREAKAGE SENSOR MICROPHONE)

Wire Harness Side Connector Front View:

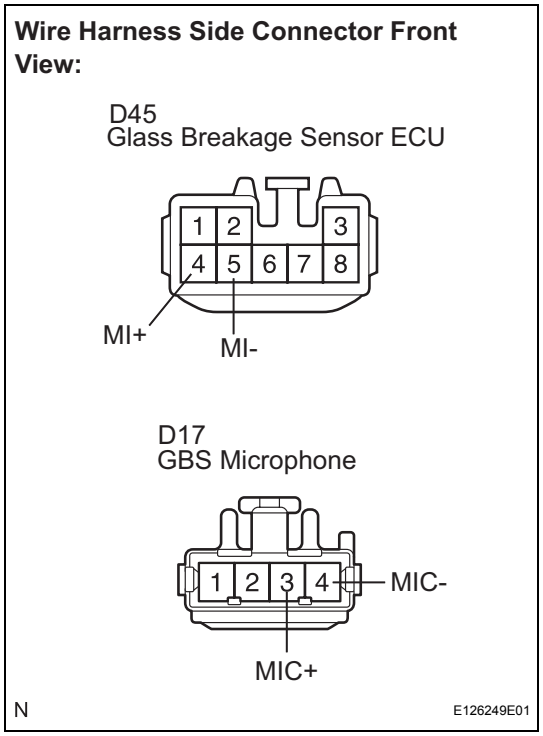

(a) Disconnect the D45 GBS ECU connector.
(b) Disconnect the D17 GBS microphone connector.
(c) Check the resistance between the wire harness side connectors.

Standard Resistance

Symbol (Terminal No.)	Specified Condition
MI+ (D45-4) - MIC+ (D17-3)	Below 1 Ω
MI- (D45-5) - MIC- (D17-4)	Below 1 Ω
MI+ (D45-4) or MIC+ (D17-3) - Body ground	10 kΩ or higher

NG → **REPAIR OR REPLACE HARNESS OR CONNECTOR**

OK

5	INSPECT GLASS BREAKAGE SENSOR ECU (MICROPHONE OUTPUT)

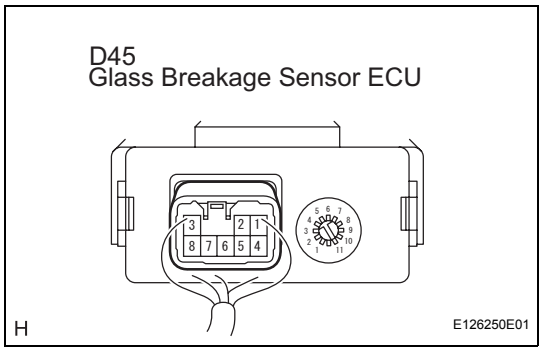

(a) Reconnect the glass breakage sensor ECU, glass breakage sensor microphone and multiplex network body ECU connectors.
(b) Connect an oscilloscope to terminal D45-3 of the glass breakage sensor ECU and body ground.
(c) Turn the ignition switch on (IG).

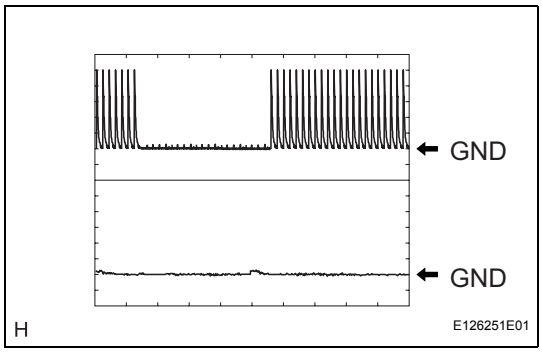

(d) Check the signal waveform according to the condition(s) in the table below.

Item	Condition
Tool setting	1 V/DIV, 50 ms/DIV
Vehicle condition	Tap the glass breakage sensor microphone with a hard object such as your fingernail.

OK:
As shown in the illustration

NG → **REPLACE GLASS BREAKAGE SENSOR MICROPHONE**

OK

REPLACE GLASS BREAKAGE SENSOR ECU

ECU Power Source Circuit

DESCRIPTION

This circuit provides power for multiplex network body ECU operation.

WIRING DIAGRAM

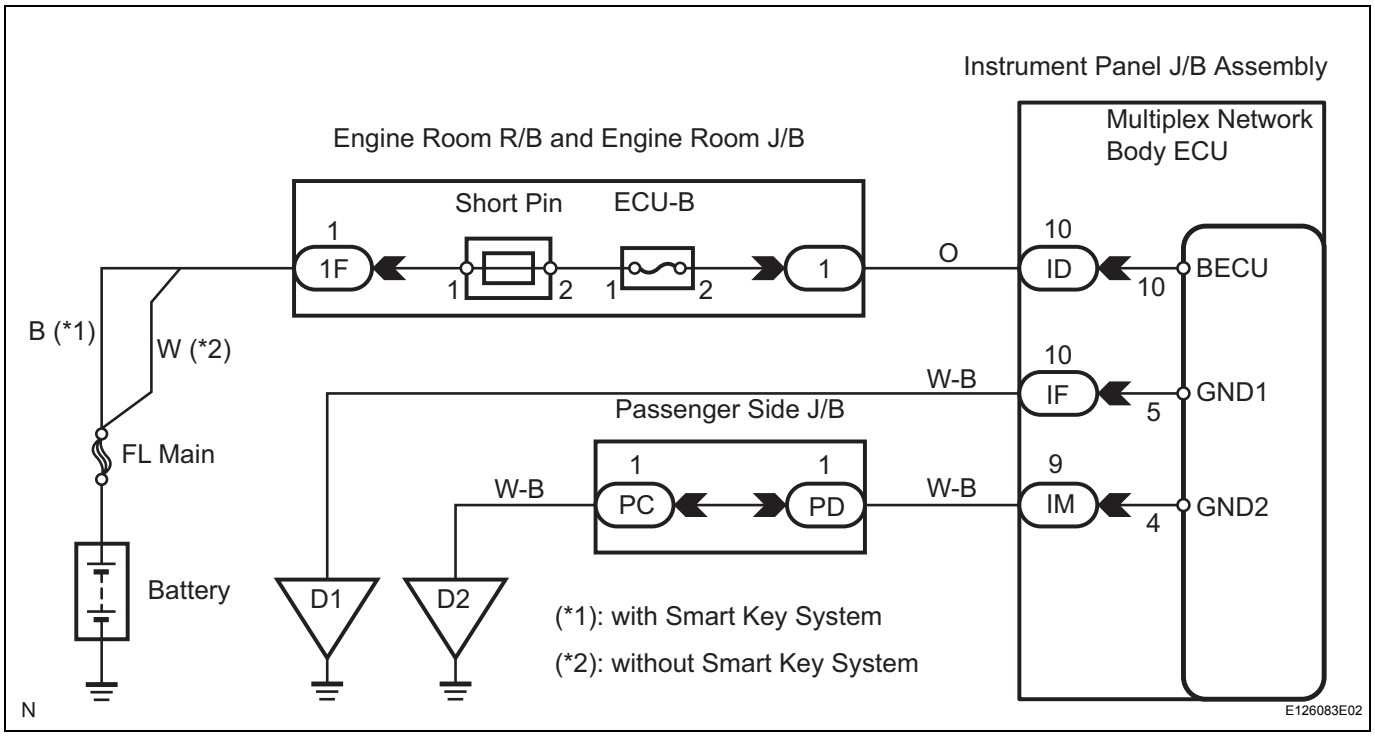

INSPECTION PROCEDURE

1	INSPECT FUSE (ECU-B)

(a) Remove the ECU-B fuse from the engine room R/B and J/B.
(b) Check the resistance.
Standard resistance:
Below 1 Ω

NG → **REPLACE FUSE**

OK

2	INSPECT INSTRUMENT PANEL JUNCTION BLOCK ASSEMBLY (MULTIPLEX NETWORK BODY ECU) (POWER SOURCE)

Connector Front View:

ID
Instrument Panel J/B Assembly

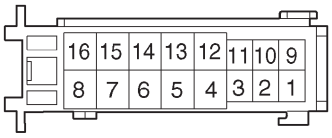

B069990E06

(a) Disconnect the ID J/B connector.
(b) Check the voltage between the wire harness side connector and the body ground.

Standard voltage

Tester Connection	Condition	Specified Condition
ID-10 - Body ground	Always	10 to 14 V

NG → **REPAIR OR REPLACE HARNESS OR CONNECTOR**

OK

3	CHECK WIRE HARNESS (INSTRUMENT PANEL J/B ASSEMBLY - BODY GROUND)

Wire Harness Side
Connector Front View:

IF
Instrument Panel J/B Assembly

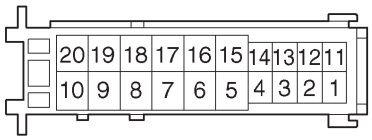

IM
Instrument Panel J/B Assembly

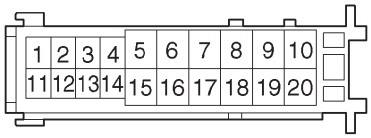

B069986E02

(a) Disconnect the IF and IM J/B connectors.
(b) Check the resistance between the wire harness side connector and the body ground.

Standard resistance

Tester Connection	Specified Condition
IF-10 - Body ground	Below 1 Ω
IM-9 - Body ground	Below 1 Ω

NG → **REPAIR OR REPLACE HARNESS OR CONNECTOR**

OK

PROCEED TO NEXT CIRCUIT INSPECTION SHOWN IN PROBLEM SYMPTOMS TABLE

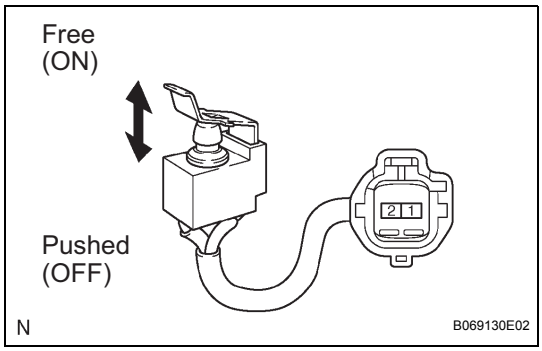

ENGINE HOOD COURTESY SWITCH

INSPECTION

1. INSPECT ENGINE HOOD COURTESY SWITCH

(a) Measure the resistance according to the value(s) in the table below.

Standard resistance

Tester Connection	Switch Position	Specified Condition
1 - 2	Free (OFF)	10 kΩ or higher
	Pushed (ON)	Below 1 Ω

If the result is not as specified, replace the hood lock assembly.

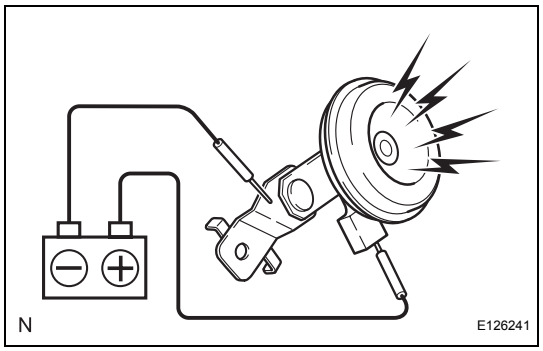

SECURITY HORN ASSEMBLY

INSPECTION

1. INSPECT SECURITY HORN ASSEMBLY

(a) Check operation of the horn.

Standard

Measurement Condition	Specified Condition
Battery positive (+) → Terminal 1	Horn sounds
Battery negative (-) → Horn body	

If the result is not as specified, replace the security horn assembly.

TIRE AND WHEEL SYSTEM

HOW TO PROCEED WITH TROUBLESHOOTING

1. VEHICLE PULLING DIAGNOSIS
2. DIAGNOSIS OF TIRE VIBRATION

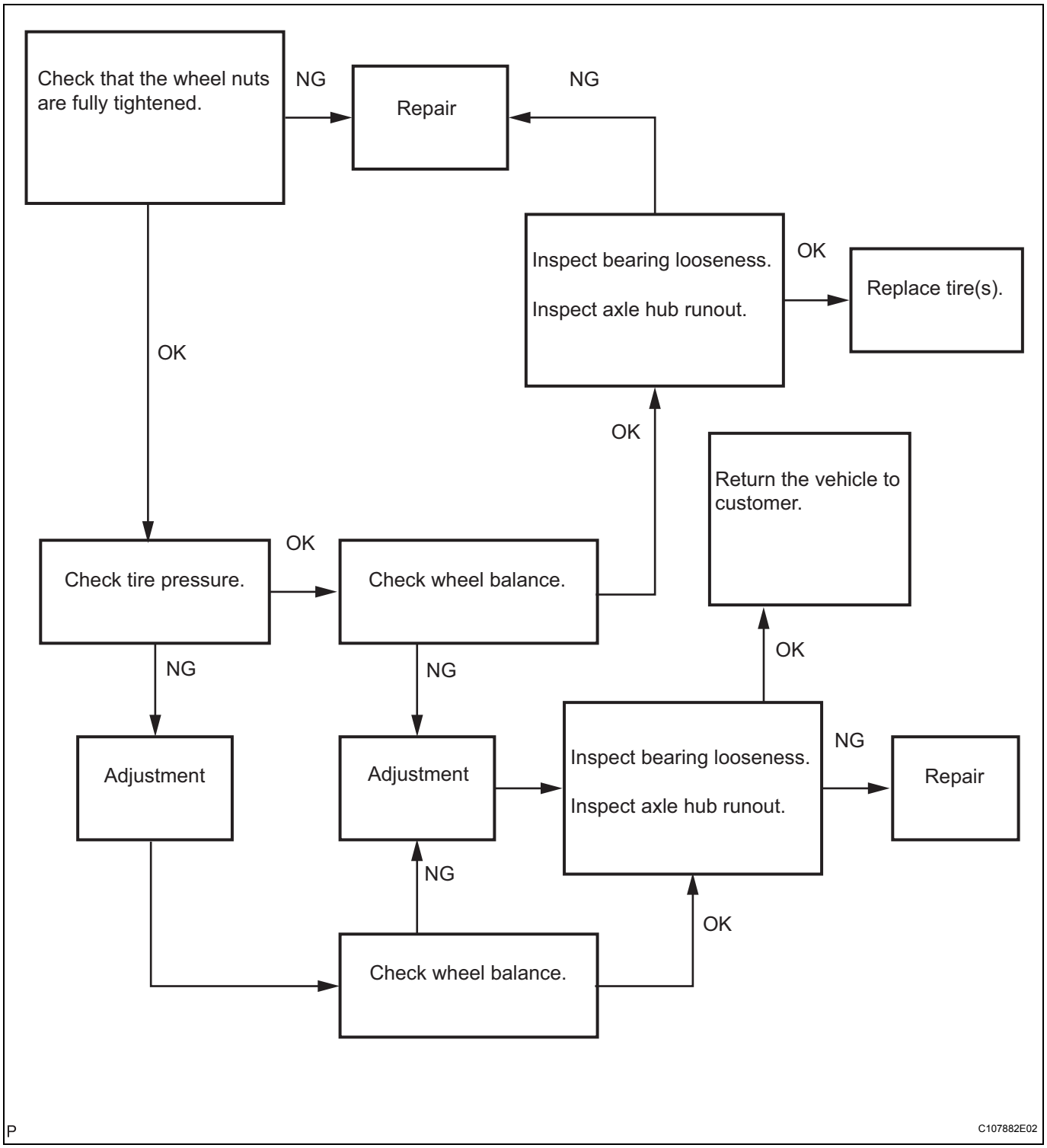

3. DIAGNOSIS OF IRREGULAR TIRE WEAR

TW

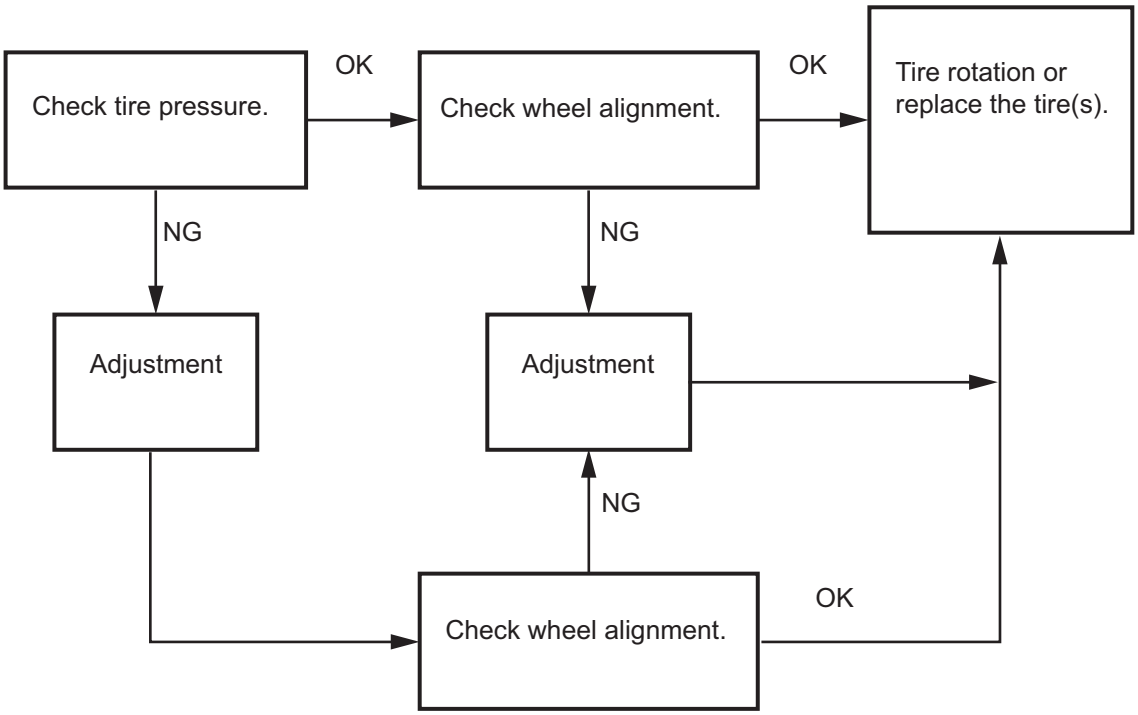
Check tire pressure.
OK
Check wheel alignment.
OK
Tire rotation or replace the tire(s).
NG
NG
Adjustment
Adjustment
NG
Check wheel alignment.
OK
P
C107883E02

INSPECTION

1. INSPECT TIRE

(a) Check the tires for wear and proper inflation pressure.

Cold tire inflation pressure

Tire size	Front kPa (kgf/cm^2, psi)	Rear kPa (kgf/cm^2, psi)
215/60R16 93 V	200 (2.0, 29)	200 (2.0, 29)
215/55R17 93 V	220 (2.2, 32)	220 (2.2, 32)

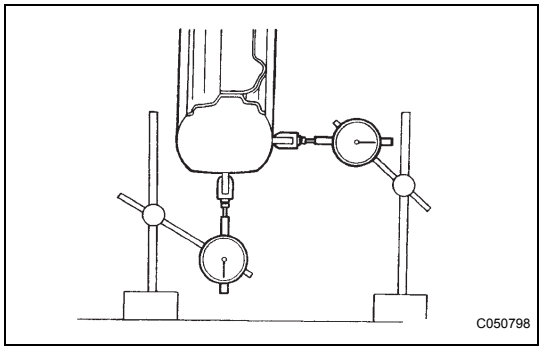

(b) Using a dial indicator, check the tire runout.

Tire runout:

1.4 mm (0.055 in.) or less

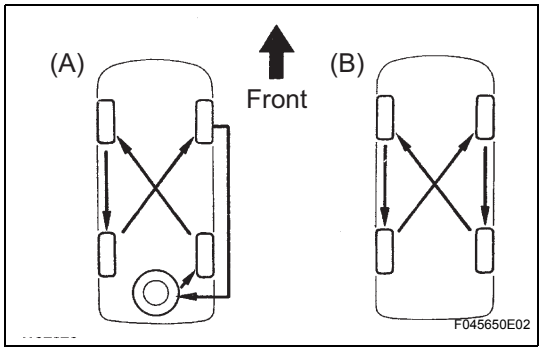

2. ROTATE TIRES

(a) See the illustration for where to rotate each tire.

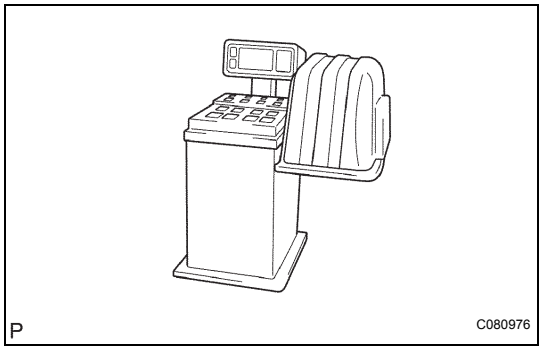

3. INSPECT WHEEL BALANCE

(a) Check and adjust the off-the-car balance.

(b) If necessary, check and adjust the on-the-car balance.

Imbalance after adjustment:

8.0 g (0.018 lb) or less

4. INSPECT BEARING LOOSENESS (See page AH-15)

5. INSPECT AXLE HUB RUNOUT (See page AH-15)

TW

POWER WINDOW CONTROL SYSTEM

PRECAUTION

NOTICE:
When disconnecting the negative (-) battery cable, initialize the following systems after the cable is reconnected.

System Name	See procedure
Power Window Control System	IN-29
Sliding Roof System	IN-29

1. EXPRESSIONS OF IGNITION SWITCH

(a) The type of ignition switch used on this model differs according to the specifications of the vehicle. The expressions listed in the table below are used in this section.

Switch Type		Ignition Switch (position)	Engine Switch (condition)
Expression	Ignition Switch off	LOCK	Off
	Ignition Switch on (IG)	ON	On (IG)
	Ignition Switch on (ACC)	ACC	On (ACC)
	Engine Start	START	Start

PARTS LOCATION

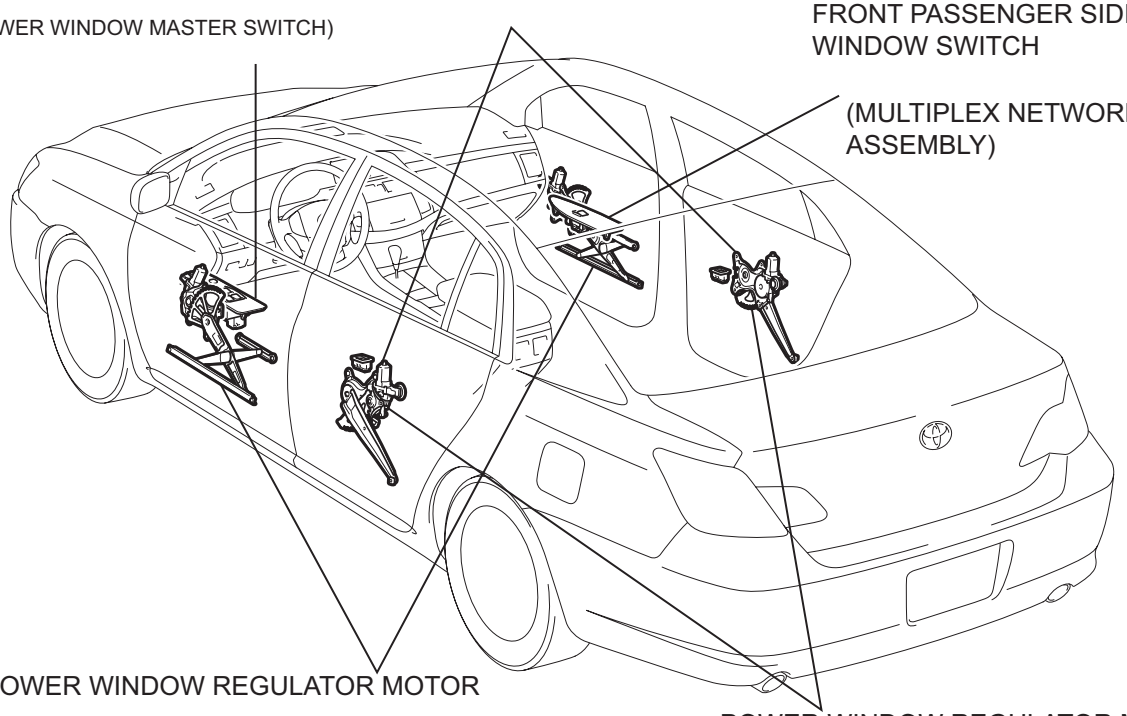

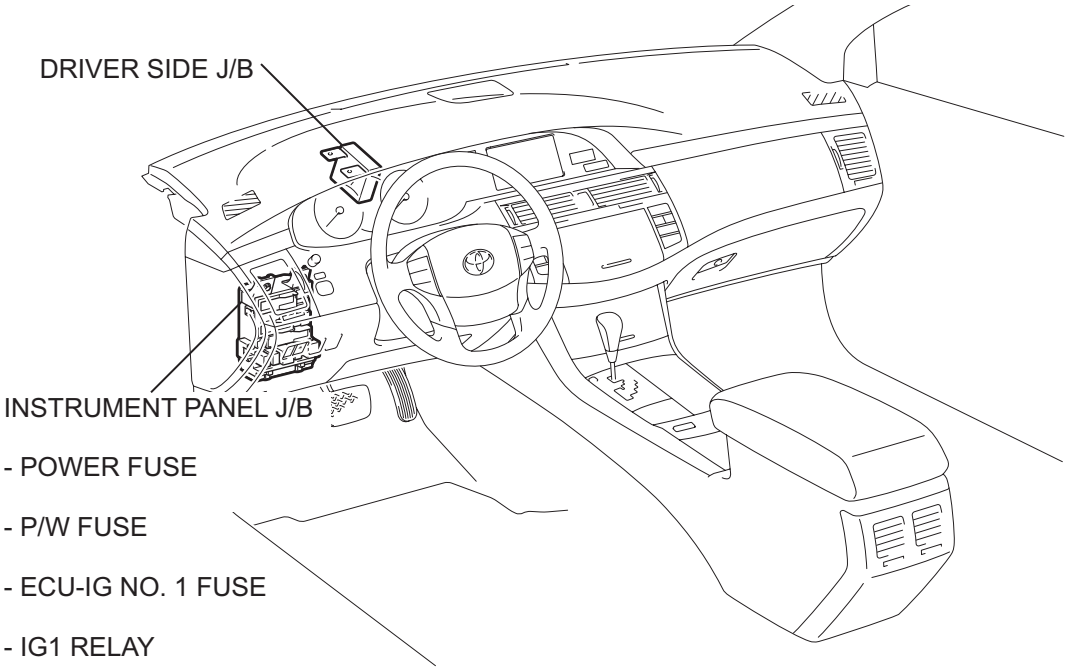

P

B115001E01

SYSTEM DIAGRAM

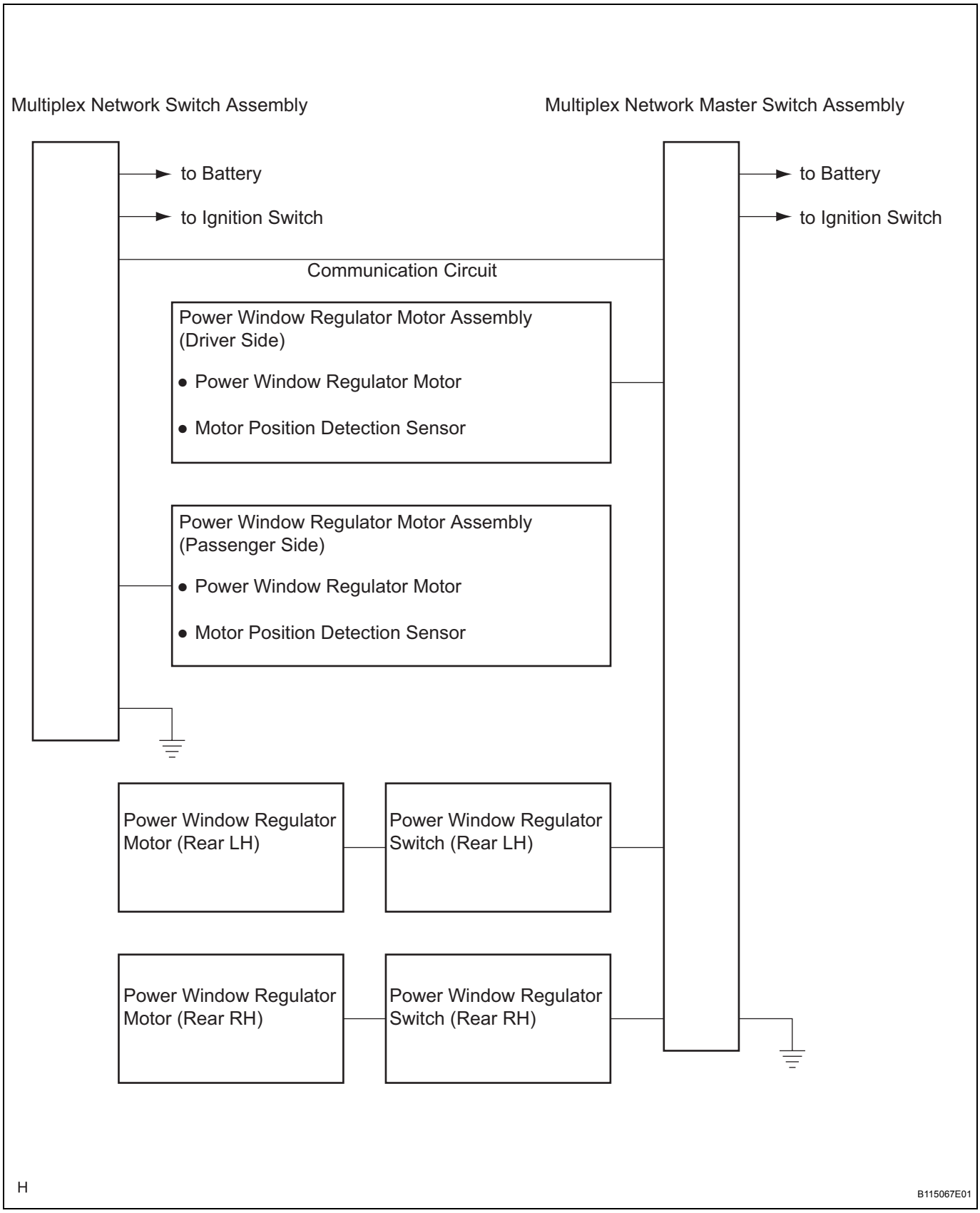

WS

SYSTEM DESCRIPTION

1. POWER WINDOW CONTROL SYSTEM DESCRIPTION

(a) The power window control system controls the power windows' UP/DOWN function using regulator motors.

The main controls of this system are: the multiplex network master switch assembly, which is built into the driver side door, and the power window regulator switches, which are built into the passenger side door and rear doors. Pressing each regulator switch on the multiplex network master switch assembly transmits a remote UP/DOWN signal to each power window regulator switch.

2. FUNCTION OF MAIN COMPONENT

Component	Outline
Multiplex Network Master Switch Assembly	Control window operations for all windows. Also, when window lock switch is set to lock position, window operation will only be possible for driver side power window.
Multiplex Network Switch Assembly	Located on passenger side door. Regulator switch assembly controls window operations for its respective window.
Power Window Regulator Switch (Rear LH, RH)	Located on rear door. Regulator switch assembly controls window operations for its respective window.
Power Window Regulator Motor Assembly	Receives switch signals and changes signals into motor activation. As a result, window position changes. Also, regulator motor assembly uses pulse sensor(s) to detect window position.

3. SYSTEM FUNCTION

(a) The power window control system has the following functions:

WS

Function	Outline
Manual UP/DOWN function	Function that raises window while power window switch is pulled halfway up and lowers window while switch is pushed halfway down. Window stops as soon as the switch is released.
Auto UP/DOWN function	Function that enables window to be fully opened or fully closed by one full push or pull of power window switch.
Jam protection function	Function that automatically stops power window and moves it downward if object is jammed in all power windows during AUTO UP operation. During key-off operation function, jam protection function works for manual UP and AUTO UP operation. Jam protection is available for front doors.
Remote control function	Function that allows multiplex network master switch assembly to control manual and AUTO UP/DOWN operations of passenger door power window and rear door power window.
Key-off operation function	Function that makes it possible to operate power window for approximately43 seconds after ignition switch is turned to ACC or LOCK position and both front doors are closed.
Window lock function	Function where passenger door power window and rear door power windows' operations are disabled when window lock switch of the multiplex network master switch assembly is pressed. Passenger door power window and rear door power window can be operated when window lock switch is pressed again.
Diagnosis	Function where power window switch can detect malfunctions in power window system and make diagnoses. Power window switch light starts blinking to inform driver.
Fail-safe	Function that disables power window AUTO UP/DOWN function if pulse sensor (Hall IC) or limit sensor in power window regulator motor malfunction. Manual operation is possible through power window switches.

HOW TO PROCEED WITH TROUBLESHOOTING

HINT:
Use this procedure to troubleshoot the power window control system.

1	VEHICLE BROUGHT TO WORKSHOP

NEXT

2	CUSTOMER PROBLEM ANALYSIS CHECK AND SYMPTOM CHECK

NEXT

3	PROBLEM SYMPTOMS TABLE

HINT:
See page WS-7

NEXT

4	ADJUST, REPAIR OR REPLACE

NEXT

5	CONFIRMATION TEST

NEXT

END

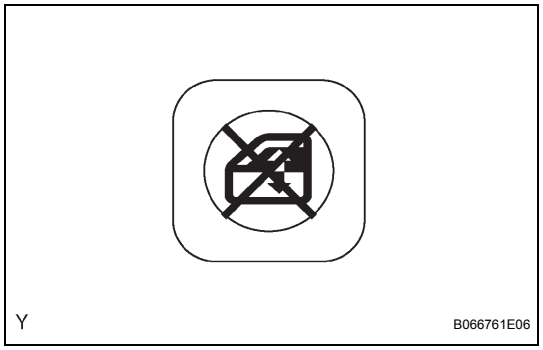

OPERATION CHECK

1. **CHECK WINDOW LOCK SWITCH**
   (a) Check that the front passenger side power window and rear power window operation is disabled when the window lock switch of the multiplex network master switch is pressed.
   (b) Check that the front passenger side power window and rear power windows can be operated when the window lock switch is pressed again.

2. CHECK MANUAL UP/DOWN FUNCTION

(a) Check that the driver side power window operates as follows:

OK

Condition	Master Switch	Switch Operation	Power Window
Ignition switch on (IG)	Driver side	Pulled halfway up	UP (Closed)
		Pushed halfway down	DOWN (Open)

(b) Check that the power windows except the driver side power window operates as follows:

OK

Condition	Master Switch	Switch Operation	Power Window
• Ignition switch ON • Window lock switch OFF	Passenger side	Pulled halfway up	UP (Closed)
		Pushed halfway down	DOWN (Open)
	Rear LH	Pulled halfway up	UP (Closed)
		Pushed halfway down	DOWN (Open)
	Rear RH	Pulled halfway up	UP (Closed)
		Pushed halfway down	DOWN (Open)

3. CHECK AUTO UP/DOWN FUNCTION

(a) Check that the driver side power window operates as follows:

OK

Condition	Master Switch	Switch Operation	Power Window
Ignition switch ON	Driver side	Pulled fully up	AUTO UP (Fully closed)
		Pushed fully down	AUTO DOWN (Fully open)

(b) Check that the power windows except the driver side power window operate as follows:

WS

OK

Condition	Master Switch	Switch Operation	Power Window
• Ignition switch ON • Window lock switch OFF	Passenger side	Pulled fully up	AUTO UP (Fully closed)
		Pushed fully down	AUTO DOWN (Fully open)

4. CHECK REMOTE MANUAL UP/DOWN FUNCTION

(a) Check that the power windows except the driver side power window operate as follows:

OK

Condition	Master Switch	Switch Operation	Power Window
• Ignition switch ON • Window lock switch OFF	Passenger side	Pulled halfway up	UP (Closed)
		Pushed halfway down	DOWN (Open)
	Rear LH	Pulled halfway up	UP (Closed)
		Pushed halfway down	DOWN (Open)
	Rear RH	Pulled halfway up	UP (Closed)
		Pushed halfway down	DOWN (Open)

5. CHECK REMOTE AUTO UP/DOWN FUNCTION

(a) Check that the power windows except the driver side power window operate as follows:

OK

Condition	Master Switch	Switch Operation	Power Window
• Ignition switch ON • Window lock switch OFF	Passenger side	Pulled fully up	AUTO UP (Fully closed)
		Pushed fully down	AUTO DOWN (Fully open)

6. CHECK JAM PROTECTION FUNCTION

HINT:

The jam protection function prevents any part of your body from getting caught by accident between the door frame and the door glass during power window operation.

NOTICE:

If the power window motor has been reset, raise and lower the door glass several times using MANUAL function before performing the check.

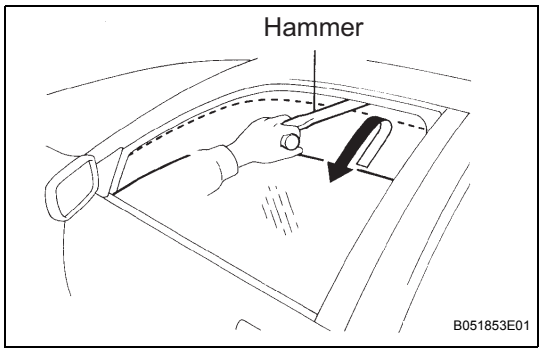

(a) Check that the door glass goes down by approximately. 50 mm (1.97 in.) right when something gets caught between the door frame and door glass during power window operation. However, when the opening between the door frame and the door glass is less than 200 mm (7.87 in.), the door glass continues to go down and does not stop until an opening of 200 mm (7.87 in.) is achieved.

Operative conditions:

- AUTO UP (FRONT DOORS)
- AUTO UP/MANUAL UP function after the ignition switch is turned off (FRONT DOORS)

INITIALIZATION

1. INITIALIZE POWER WINDOW REGULATOR MOTOR

NOTICE:

If the jam protection function does not function properly, perform the following procedures.

(a) Ignition switch on (IG).
(b) (Power window can be partially or fully open.)
(c) Close the power window by holding the Auto UP knob ON.
(d) Continue to hold the Auto UP knob ON a minimum of 1 second after the power window completely closes.
(e) Release the Auto UP knob.

HINT:

Front passenger must be initialized from actual multiplex network switch assembly. After initialization operation (from the multiplex network master switch assembly to the multiplex network switch assembly) will be allowed.

PROBLEM SYMPTOMS TABLE

POWER WINDOW CONTROL SYSTEM

Symptom	Suspected area	See page
Power window does not operate at all	1. Power source circuit (multiplex network master switch assembly)	WS-11
	2. Multiplex network master switch assembly	-
Driver side power window does not operate	1. Power source circuit (multiplex network master switch assembly)	WS-11
	2. Power window motor circuit (driver side)	WS-21
	3. Multiplex network master switch assembly	-
Passenger side power window does not operate (with master switch)	1. Window lock signal circuit	WS-29
	2. Multiplex network master switch assembly	-
Passenger side power window does not operate (with front passenger switch)	1. Power source circuit (front passenger switch)	WS-13
	2. Multiplex network switch assembly	-
	3. Power window motor circuit (front passenger side)	WS-13
Rear LH power window does not operate	1. Power source circuit (multiplex network master switch assembly)	WS-11
	2. Power window motor circuit (rear LH)	WS-25
	3. Power window regulator switch circuit (rear LH)	WS-17
Rear RH power window does not operate	1. Power source circuit (multiplex network master switch assembly)	WS-11
	2. Power window motor circuit (rear RH)	WS-27
	3. Power window regulator switch circuit (rear RH)	WS-19
Jam protection function and AUTO UP/DOWN function do not operate on driver side	1. Initialization	WS-7
	2. Multiplex network master switch assembly	-
	3. Power window regulator motor assembly	-
Jam protection function and AUTO UP/DOWN function do not front passenger side	1. Initialization	WS-7
	2. Multiplex network switch assembly	-
	3. Power window regulator motor assembly (front passenger side)	-
Window lock function does not operate	1. Window lock signal circuit	WS-29
	2. Multiplex network master switch assembly	-
Window control function does not operate	1. Window lock signal circuit	WS-29
	2. Multiplex network master switch assembly	-

TERMINALS OF ECU

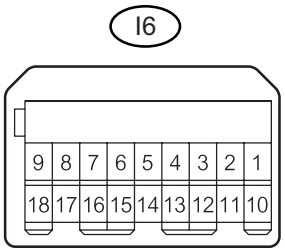

H

B131698E01

1. MULTIPLEX NETWORK MASTER SWITCH ASSEMBLY

Symbols (Terminal No.)	Wiring Color	Terminal Description	Condition	Specified Condition
E (I6-1) - Body ground	W-B - Body ground	Ground	Always	Below 1 V
SGND (I6-2) - Body ground	W-B - Body ground	Ground	Always	Below 1 V
VC (I6-3) - E(I6-1)	L - Body ground	Power window motor position sensor power source	Always	10 to 14 V
DU (I6-4) - Body ground	P - Body ground	Power window motor UP output signal (Driver side)	Ignition switch on (IG), power window OFF → UP	0 V → 10 to 14 V
L (I6-5) - E (I6-1)	G - Body ground	Door lock signal	Door lock switch position is OFF → LOCK	10 to 14 V → 0 V
B (I6-6) - E (I6-1)	R - Body ground	Power window switch power source	Always	10 to 14 V
BW (I6-7) - E (I6-1)	W - Body ground	Power window switch power source	Always	10 to 14 V
UL (I6-8) - E (I6-1)	L - Body ground	Door lock signal	Door lock switch position is OFF → UNLOCK	10 to 14 V → 0 V
DD (I6-9) - Body ground	BR - Body ground	Power window motor DOWN output signal (Driver side)	Ignition switch on (IG), power window OFF → DOWN	0 V → 10 to 14 V
RLD (I6-10) - Body ground	R - Body ground	Power window motor DOWN output signal (Rear RL)	Ignition switch on (IG), power window OFF → DOWN	0 V → 10 to 14 V
IG (I6-11) - E (I6-1)	GR - Body ground	Power window switch power source	Ignition switch OFF → ON	0 V → 10 to 14 V
RLU (I6-12) - Body ground	BR - Body ground	Power window motor UP output signal (Rear RL)	Ignition switch on (IG), power window OFF → UP	0 V → 10 to 14 V
TX (I6-13) - E (I6-1)	B - Body ground	Communication circuit	-	-
PLS1 (I6-14) - E (I6-1)	LG - Body ground	Power window motor position sensor input signal (Driver side)	Power window operating	Pulse generation
PCT (I6-15) - E (I6-1)	Y- Body ground	Power window lock switch output signal	Ignition switch on (IG), power window lock switch NORMAL → LOCK	10 to 14 V → 0 V
RRD (I6-16) - Body ground	V - Body ground	Power window motor DOWN output signal (Rear RH)	Ignition switch on (IG), power window OFF → DOWN	0 V → 10 to 14 V
PLS2 (I6-17) - E (I6-1)	LG - Body ground	Power window motor position sensor input signal (Driver side)	Power window operating	Pulse generation
RRU (I6-18) - Body ground	L - Body ground	Power window motor UP output signal (Rear RHL)	Ignition switch on (IG), power window OFF → UP	0 V → 10 to 14 V

2. MULTIPLEX NETWORK SWITCH ASSEMBLY

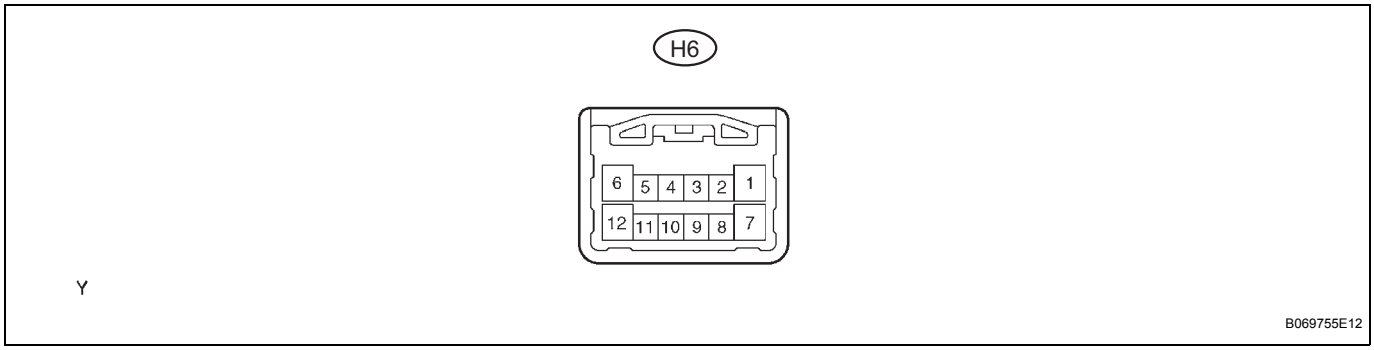

Symbols (Terminal No.)	Wiring Color	Terminal Description	Condition	Specified Condition
D (H6-1) - Body ground	R - Body ground	Power window motor DOWN output signal (Front passenger side)	Ignition switch on (IG), power window OFF → DOWN	0 V → 10 to 14 V
RX (H6-2) - E (H6-7)	GR - Body ground	Communication circuit	-	-
PLS1 (H6-3) - E (H6-7)	B - Body ground	Power window motor position sensor input signal (Driver side)	Power window operating	Pulse generation
PLS2 (H6-4) - E (H6-7)	LG - Body ground	Power window motor position sensor input signal (Driver side)	Power window operating	Pulse generation
VCC (H6-5) - E (H6-7)	W - Body ground	Power window motor position sensor power source	Always	10 to 14 V
U (H6-6) - Body ground	G - Body ground	Power window motor UP output signal (Front passenger side)	Ignition switch on (IG), power window OFF → UP	0 V → 10 to 14 V
E (H6-7) - Body ground	W-B - Body ground	Ground	Always	Below 1 V
SGND (H6-8) - Body ground	W-B - Body ground	Ground	Always	Below 1 V
PCT (H6-11) - E (H6-7)	BR - Body ground	Power window lock switch output signal	Ignition switch on (IG), power window lock switch NORMAL → LOCK	10 to 14 V → 0 V
BW (H6-12) - E (H6-7)	V - Body ground	Power window switch power source	Always	10 to 14 V

DIAGNOSIS SYSTEM

1. CHECK DIAGNOSIS

(a) Turn the ignition switch ON.

(b) Operate the driver side switch of the master switch.

(c) Check the blinking pattern of the AUTO light as shown in the illustration.

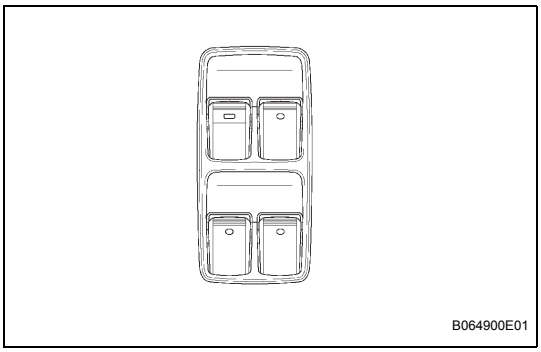

Blinking Pattern of Light:

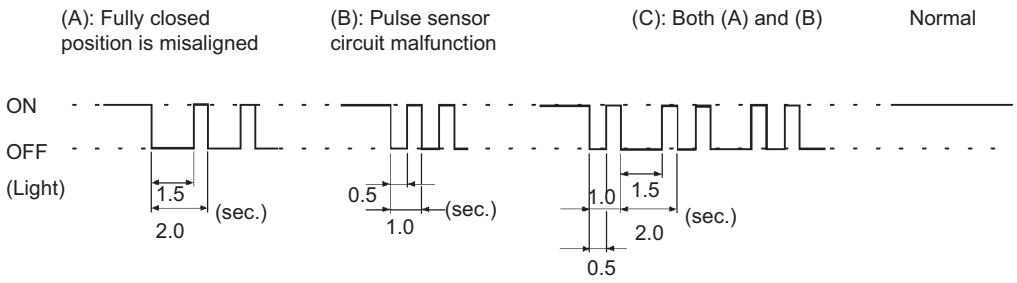

(1) If pattern (A) is displayed, reset power window regulator motor.

(2) If pattern (B) or (C) displayed, check the wire harness.

(3) If the normal pattern is displayed, replace the multiplex network master switch.

WS

Power Window Master Switch Power Source Circuit

DESCRIPTION

This circuit supplies power to operate the multiplex network master switch.

WIRING DIAGRAM

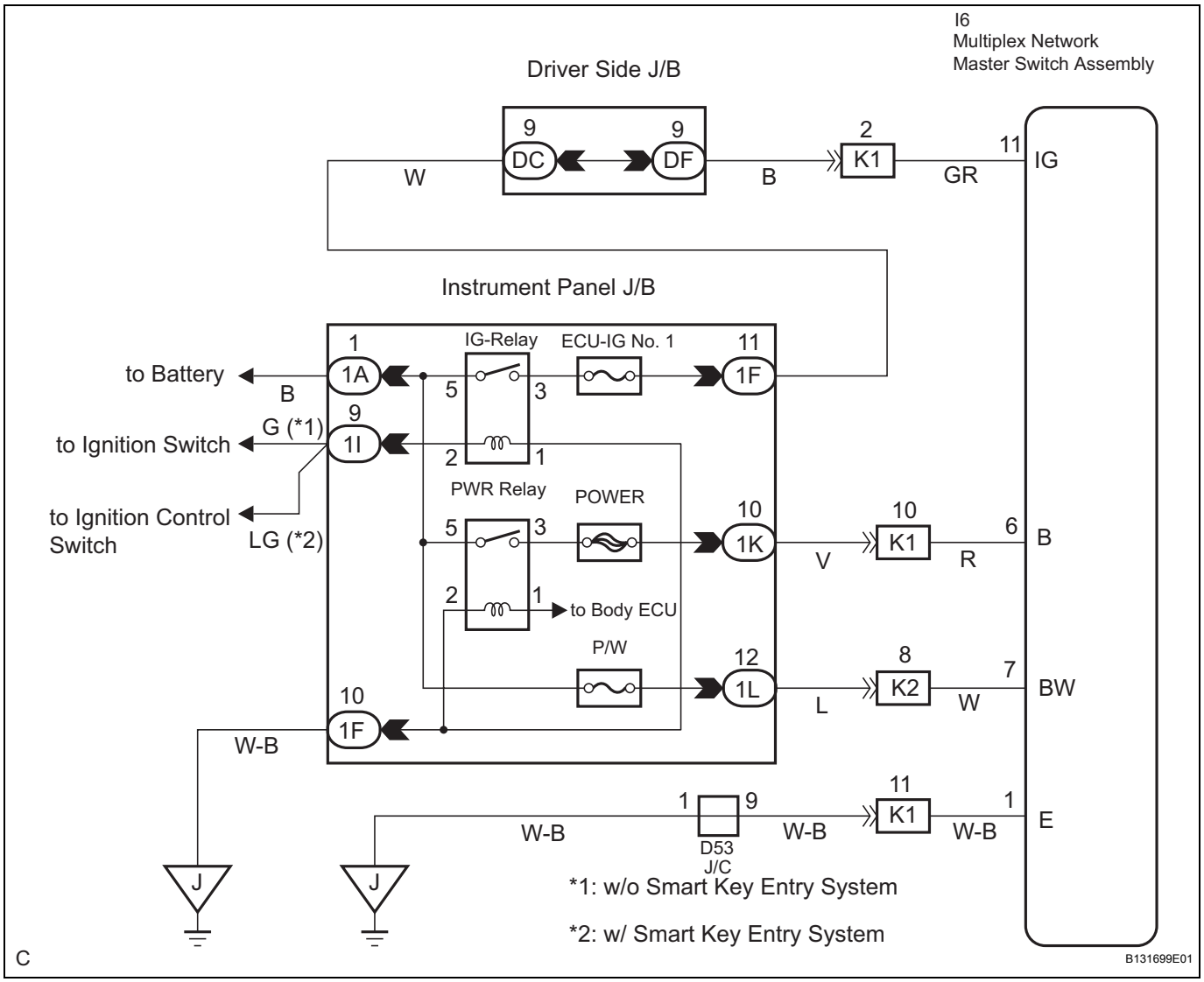

WS

INSPECTION PROCEDURE

1	CHECK WIRE HARNESS (MULTIPLEX NETWORK MASTER SWITCH - BATTERY AND BODY GROUND)

Multiplex Network Master Switch Assembly:

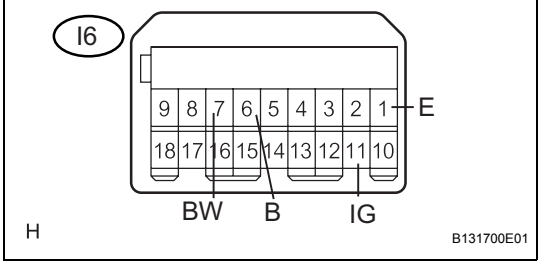

(a) Disconnect the I6 connector.
(b) Measure the resistance and voltage according to the value(s) in the table below.

Resistance

Tester Connection	Condition	Specified Condition
I6-1 (E) - Body ground	Always	Below 1 Ω

Voltage

Tester Connection	Condition	Specified Condition
I6-7 (BW) - Body ground	Always	10 to 14 V
I6-6 (B) - Body ground	Always	10 to 14 V
I6-11 (IG) - Body ground	Ignition switch OFF → ON	0 V → 10 to 14 V

NG → **REPAIR OR REPLACE HARNESS OR CONNECTOR**

OK

PROCEED TO NEXT INSPECTION SHOWN IN PROBLEM SYMPTOMS TABLE

Front Passenger Side Power Window Switch Power Source Circuit

DESCRIPTION

This circuit supplies power to operate the multiplex network switch.

WIRING DIAGRAM

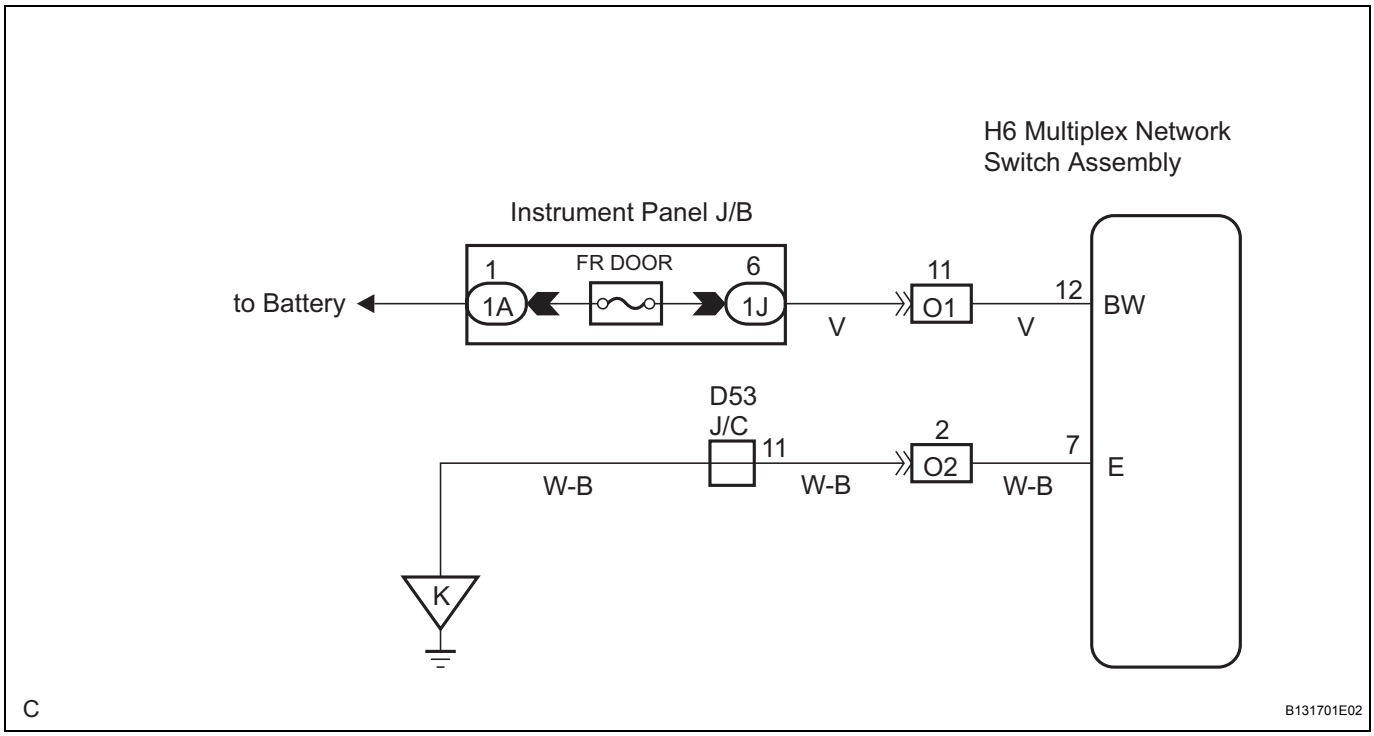

INSPECTION PROCEDURE

1	CHECK WIRE HARNESS (MULTIPLEX NETWORK SWITCH - BATTERY AND BODY GROUND)

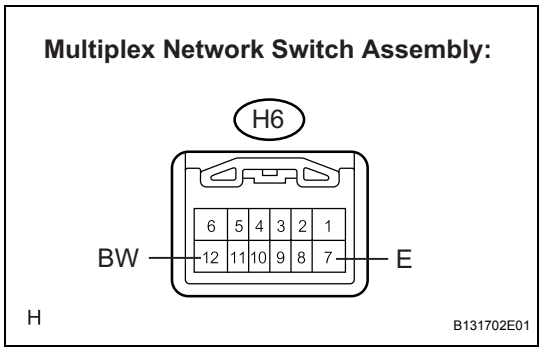

(a) Disconnect the H6 connector.
(b) Measure the resistance and voltage according to the value(s) in the table below.

Resistance

Tester Connection	Condition	Specified Condition
H6-7(E) - Body ground	Always	Below 1 Ω

Voltage

Tester Connection	Condition	Specified Condition
H6-12(BW) - Body ground	Always	10 to 14 V

NG → REPAIR OR REPLACE HARNESS OR CONNECTOR

OK

PROCEED TO NEXT CIRCUIT INSPECTION SHOWN IN PROBLEM SYMPTOMS TABLE

Front Passenger Side Power Window Switch Circuit

DESCRIPTION

This circuit transmits signals from the multiplex network master switch assembly to multiplex network switch assembly.

WIRING DIAGRAM

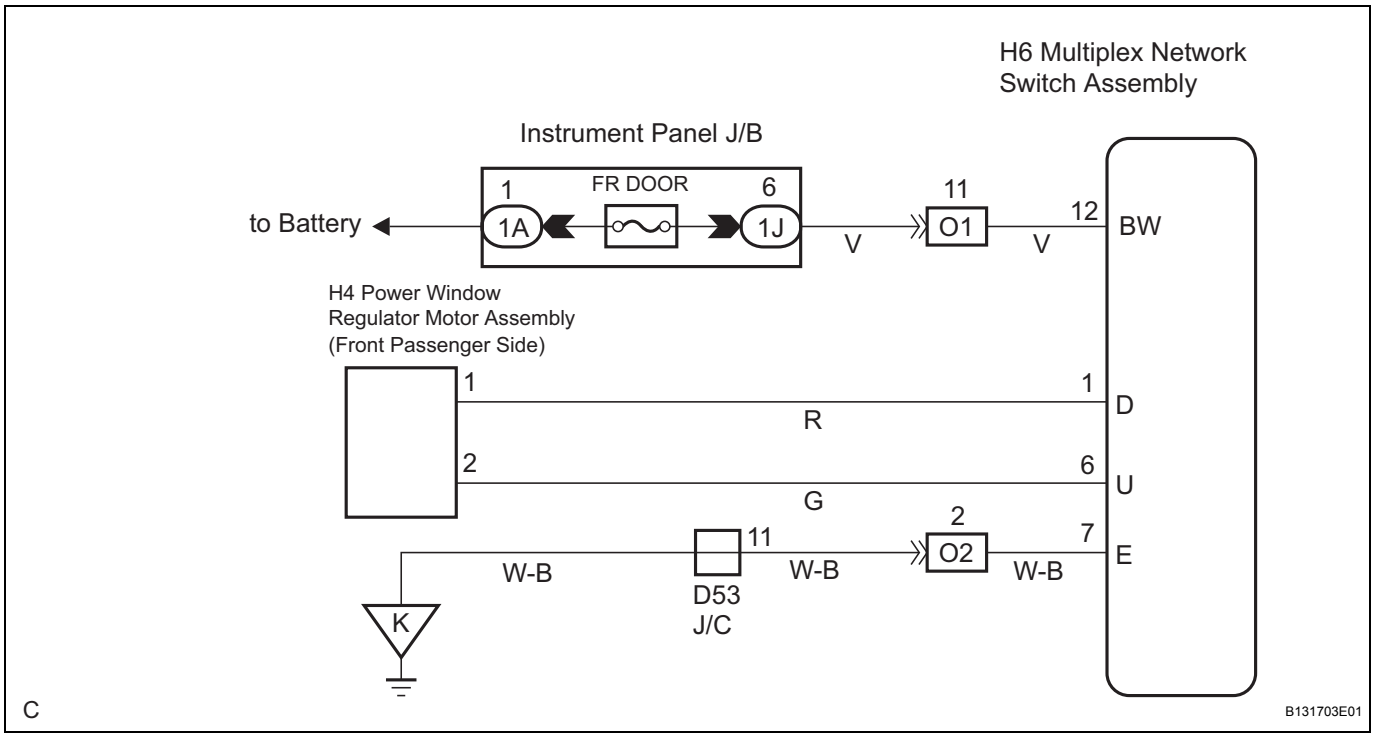

WS

INSPECTION PROCEDURE

1	INSPECT MULTIPLEX NETWORK SWITCH ASSEMBLY

Multiplex Network Switch Assembly:

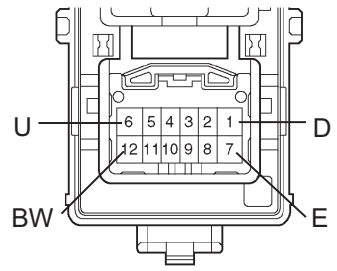

(a) Remove the switch.
(b) Measure the resistance of the switch when the switch is operated.

Resistance

Switch Condition	Tester Connection	Specified Condition
AUTO UP	1 (D) - 7 (E) 6 (U) - 12 (BW)	Below 1Ω
UP	1 (D) - 7 (E) 6 (U) - 12 (BW)	Below 1Ω
OFF	1 (D) - 7 (E) 6 (U) - 7 (E)	Below 1Ω
DOWN	6 (U) - 7 (E) 1 (D) - 12 (BW)	Below 1Ω
AUTO DOWN	6 (U) - 7 (E) 1 (D) - 12 (BW)	Below 1Ω

NG	REPLACE MULTIPLEX NETWORK SWITCH ASSEMBLY

OK

PROCEED TO NEXT CIRCUIT INSPECTION SHOWN ON PROBLEM SYMPTOMS TABLE

Rear Power Window Switch LH Circuit

DESCRIPTION

This circuit transmits signals from the multiplex network master switch assembly to power window regulator switch assembly (Rear LH).

WIRING DIAGRAM

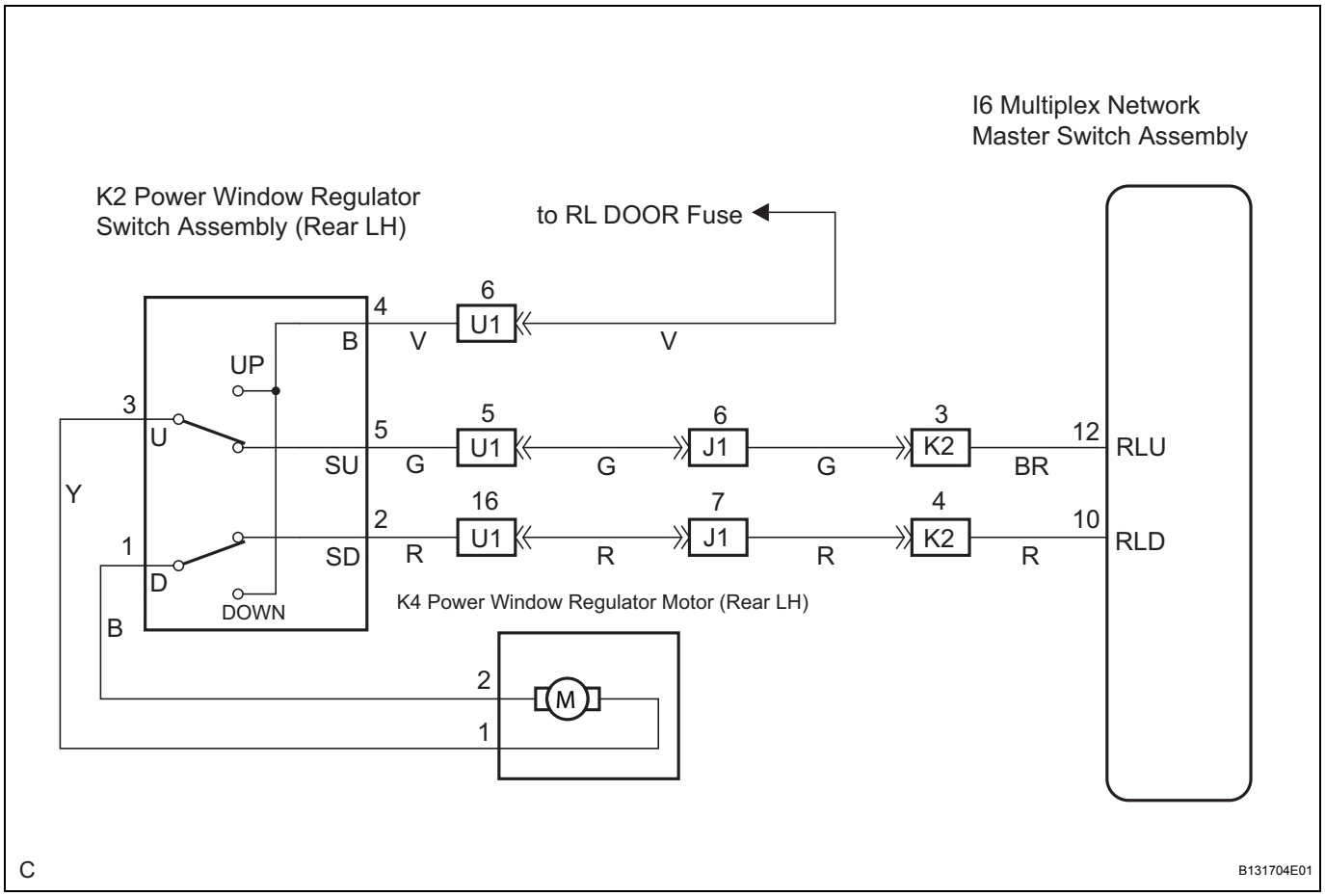

INSPECTION PROCEDURE

1	INSPECT POWER WINDOW REGULATOR SWITCH ASSEMBLY (REAR LH)

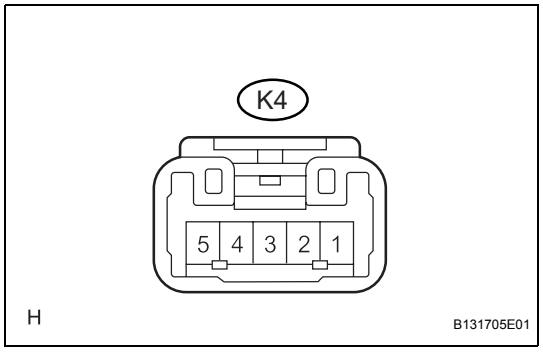

(a) Remove the switch.
(b) Measure the resistance of the switch when the switch is operated.

Resistance

Switch Condition	Tester Connection	Specified Condition
UP	1 (D) - 2 (SD) 3 (U) - 4 (B)	Below 1 Ω
OFF	1 (D) - 2 (SD) 3 (U) - 5 (SU)	Below 1 Ω
DOWN	1 (D) - 4 (B) 3 (U) - 5 (SU)	Below 1 Ω

WS

NG → **REPLACE POWER WINDOW REGULATOR SWITCH ASSEMBLY (REAR LH)**

OK

PROCEED TO NEXT INSPECTION SHOWN IN PROBLEM SYMPTOMS TABLE

Rear Power Window Switch RH Circuit

DESCRIPTION

This circuit transmits signals from the multiplex network master switch assembly to power window regulator switch assembly (Rear RH).

WIRING DIAGRAM

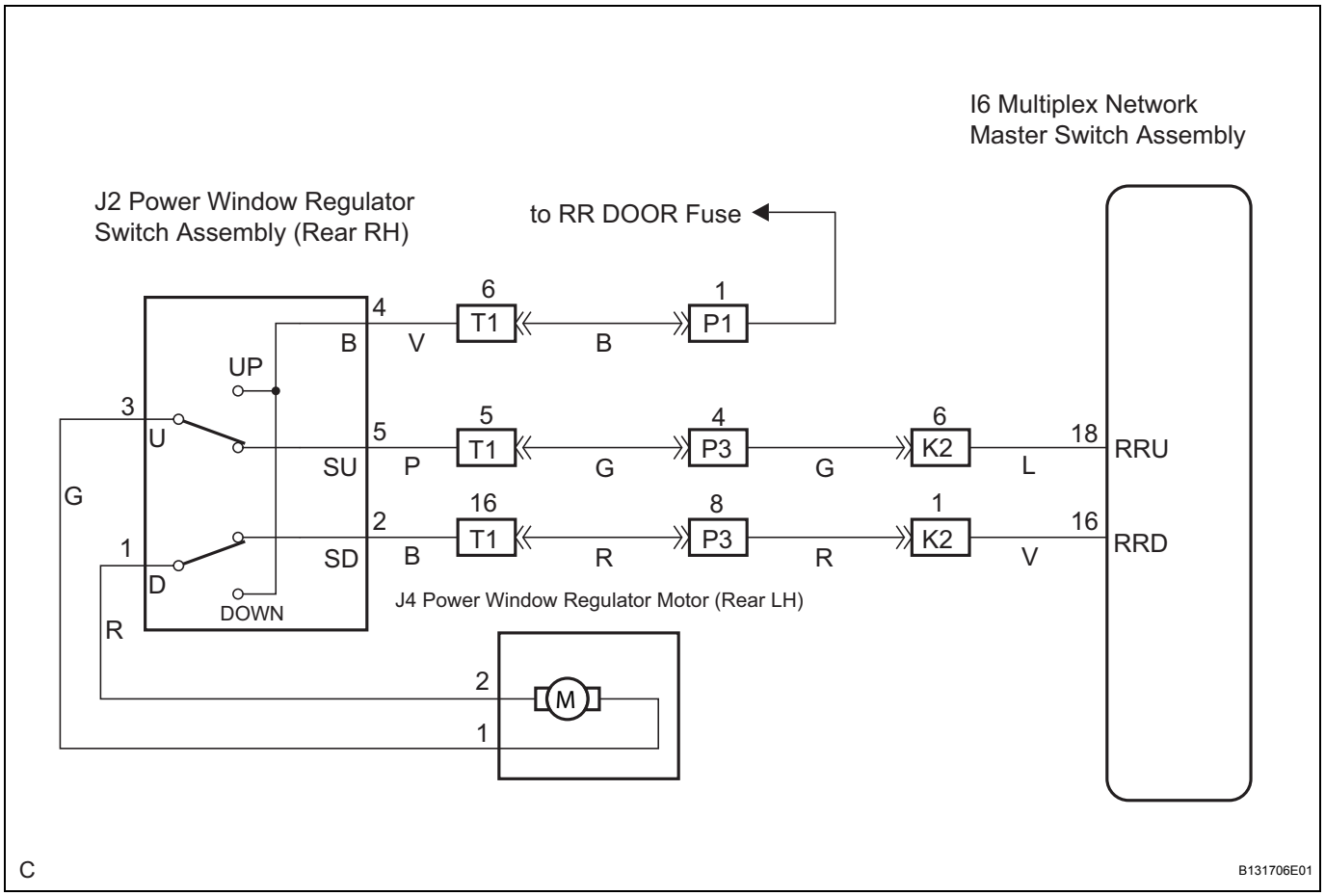

INSPECTION PROCEDURE

1	INSPECT POWER WINDOW REGULATOR SWITCH ASSEMBLY (REAR RH)

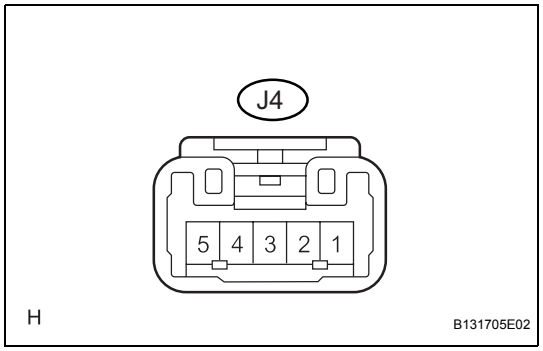

(a) Remove the switch.
(b) Measure the resistance of the switch when the switch is operated.

Resistance

Switch Condition	Tester Connection	Specified Condition
UP	1 (D) - 2 (SD) 3 (U) - 4 (B)	Below 1 Ω
OFF	1 (D) - 2 (SD) 3 (U) - 5 (SU)	Below 1 Ω
AUTO DOWN	1 (D) - 4 (B) 3 (U) - 5 (SU)	Below 1 Ω

WS

NG → **REPLACE POWER WINDOW REGULATOR SWITCH ASSEMBLY (REAR RH)**

OK

PROCEED TO NEXT CIRCUIT INSPECTION SHOWN IN PROBLEM SYMPTOMS TABLE

Driver Side Power Window Motor Circuit

DESCRIPTION

This circuit transmits signal from the multiplex network master switch assembly to power window regulator motor assembly (Driver side).

WIRING DIAGRAM

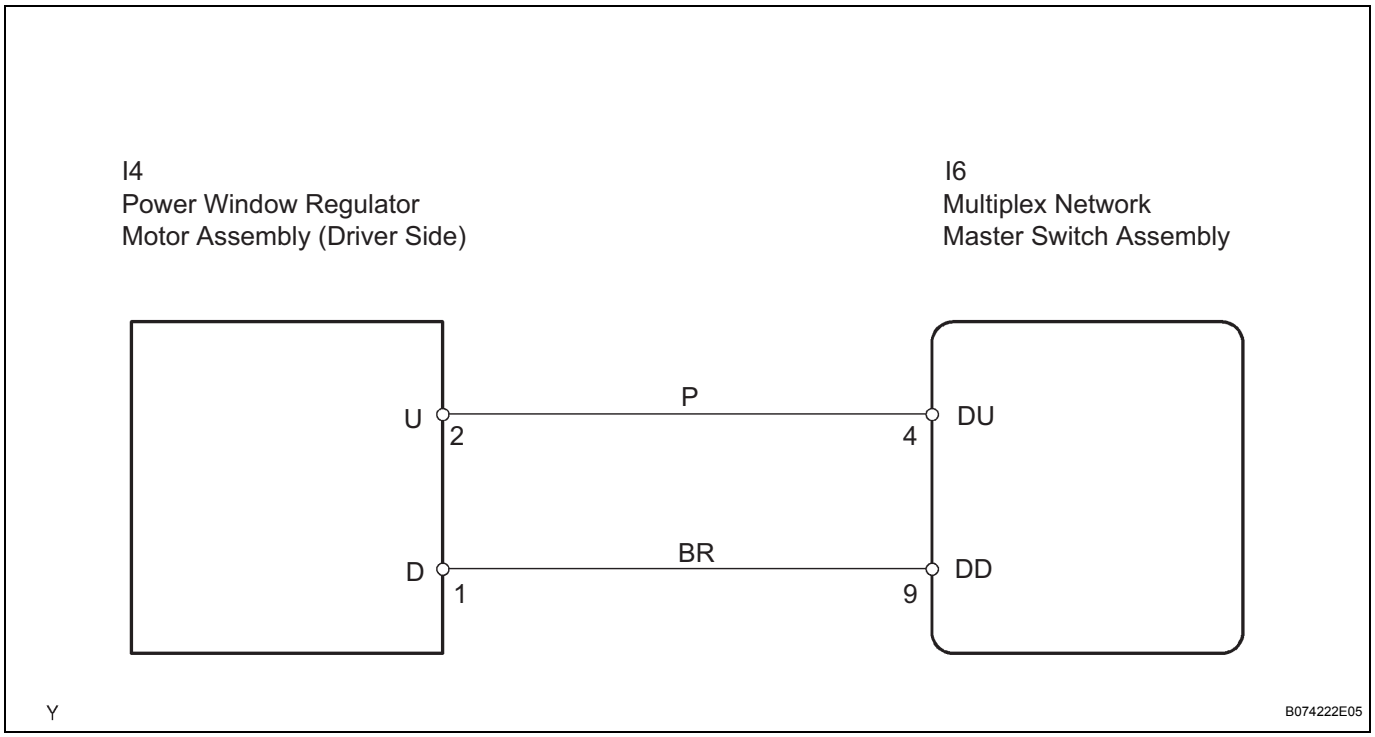

WS

INSPECTION PROCEDURE

1	INSPECT POWER WINDOW REGULATOR MOTOR (DRIVER SIDE)

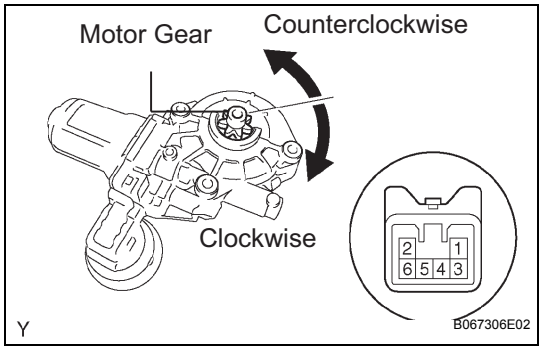

(a) Remove the power window motor.
(b) Apply battery voltage to the motor connector according to the table below.
NOTICE:
Do not apply battery voltage to any terminals except terminal 1 and 2.
Standard

Measurement Condition	Specified Condition
Battery positive (+) → Terminal 2 (U) Battery negative (-) → Terminal 1 (D)	Motor gear rotates clockwise
Battery positive (+) → Terminal 1 (D) Battery negative (-) → Terminal 2 (U)	Motor gear rotates counterclockwise

NG → **REPLACE POWER WINDOW REGULATOR MOTOR (DRIVER SIDE)**

OK

2	CHECK WIRE HARNESS (WINDOW REGULATOR MOTOR - MULTIPLEX NETWORK MASTER SWITCH)

Wire Harness Side:

I4
Power Window Regulator
Motor Assembly (Driver Side)

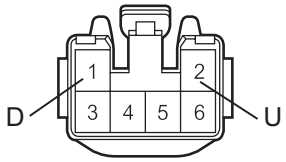

I6
Multiplex Network
Master Switch Assembly

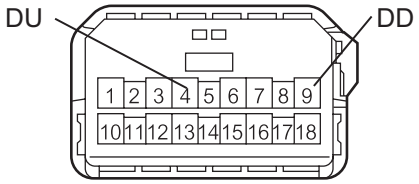

H

B131707E01

(a) Disconnect the I4 and I6 connectors.
(b) Measure the resistance of the wire harness side connectors.

Resistance

Tester Connection	Condition	Specified Condition
I4-1 - I6-9	Always	Below 1 Ω
I4-2 - I6-4	Always	Below 1 Ω
I4-1 - Body ground	Always	10 kΩ or higher
I4-2 - Body ground	Always	10 kΩ or higher

NG → **REPAIR OR REPLACE HARNESS OR CONNECTOR**

OK

WS

PROCEED TO NEXT CIRCUIT INSPECTION SHOWN IN PROBLEM SYMPTOM TABLE

Front Passenger Side Power Window Motor Circuit

DESCRIPTION

This circuit transmits signal from the multiplex network switch to power window regulator motor.

WIRING DIAGRAM

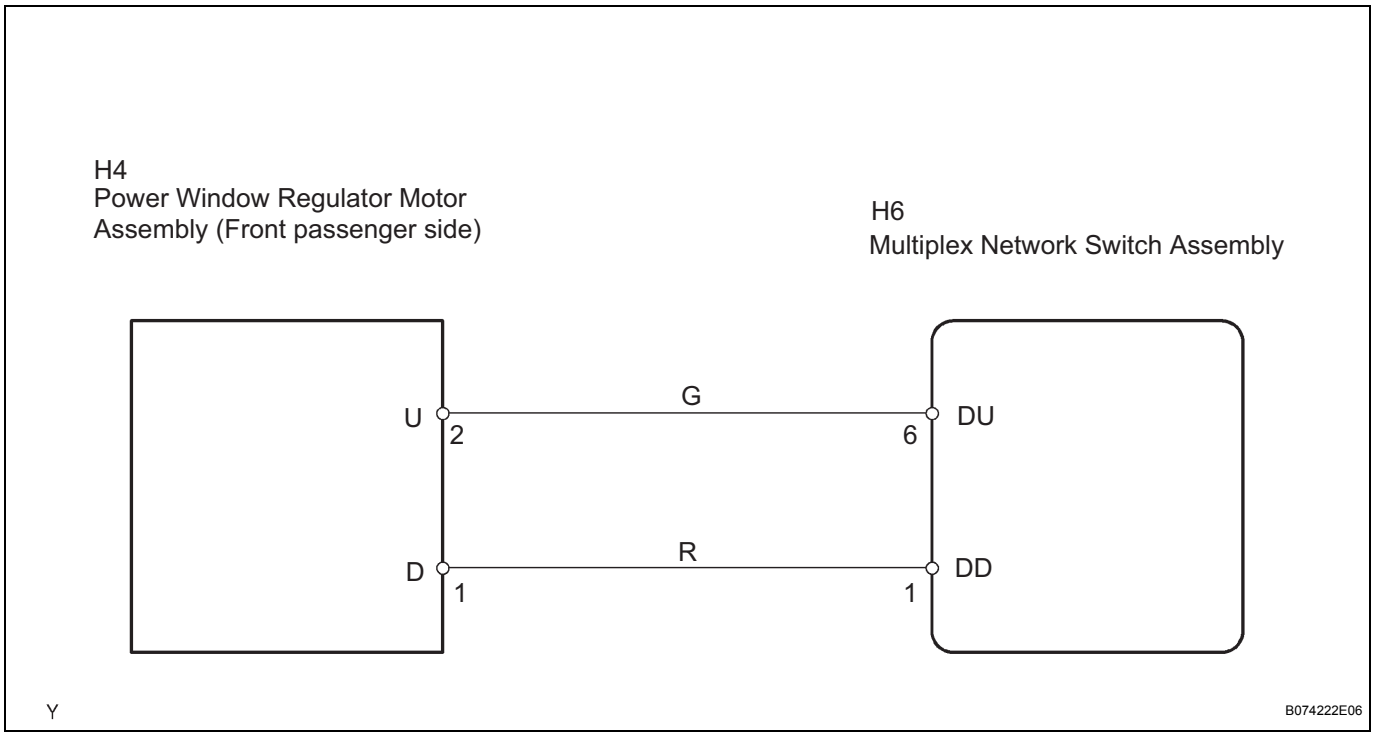

WS

INSPECTION PROCEDURE

1	INSPECT POWER WINDOW REGULATOR MOTOR (FRONT PASSENGER SIDE)

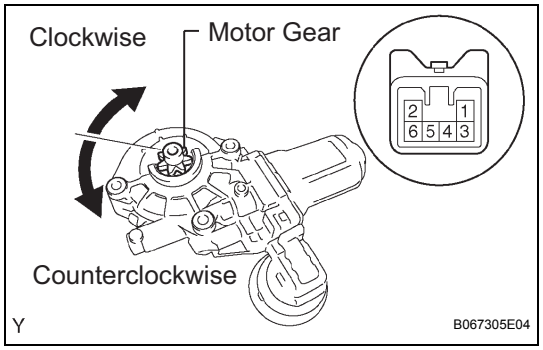

(a) Remove the power window motor.
(b) Apply battery voltage to the motor connector according to the table below.

NOTICE:
Do not apply battery voltage to any terminals except terminals 1 and 2.

Standard

Measurement Condition	Specified Condition
Battery positive (+) → Terminal 1 (D) Battery negative (-) → Terminal 2 (U)	Motor gear rotates clockwise
Battery positive (+) → Terminal 2 (U) Battery negative (-) → Terminal 1 (D)	Motor gear rotates counterclockwise

NG → **REPLACE POWER WINDOW REGULATOR MOTOR (FRONT PASSENGER SIDE)**

OK

2	CHECK WIRE HARNESS (WINDOW REGULATOR MOTOR - MULTIPLEX NETWORK SWITCH)

Wire Harness Side:

H4
Power Window Regulator Motor Assembly (Front passenger Side)

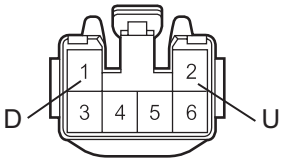

H6
Multiplex Network Switch Assembly

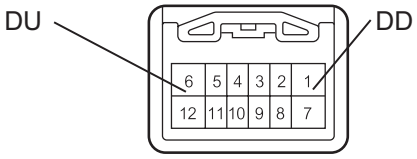

H

B131708E01

(a) Disconnect the H4 and H6 connectors.
(b) Measure the resistance of the wire harness side connectors.

Resistance

Tester Connection	Condition	Specified Condition
H4-2 - H6-6	Always	Below 1 Ω
H4-1 - H6-1	Always	Below 1 Ω
H4-2 - Body ground	Always	10 kΩ or higher
H4-1 - Body ground	Always	10 kΩ or higher

NG → **REPAIR OR REPLACE HARNESS OR CONNECTOR**

OK

PROCEED TO NEXT CIRCUIT INSPECTION SHOWN IN PROBLEM SYMPTOMS TABLE

Rear Power Window Motor LH Circuit

DESCRIPTION

This circuit transmits signal from the power window regulator switch assembly (Rear LH) to power window regulator motor assembly (Rear LH).

WIRING DIAGRAM

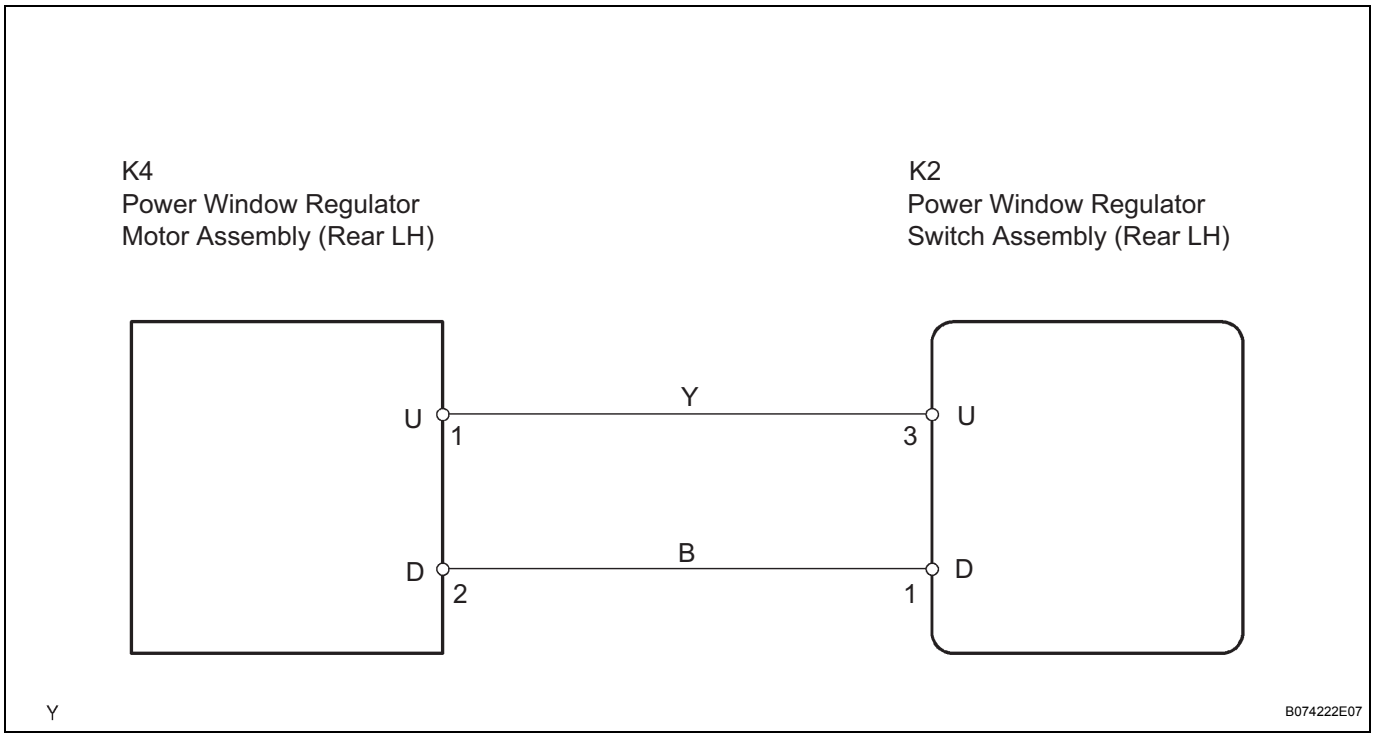

WS

INSPECTION PROCEDURE

1	INSPECT POWER WINDOW REGULATOR MOTOR (REAR LH)

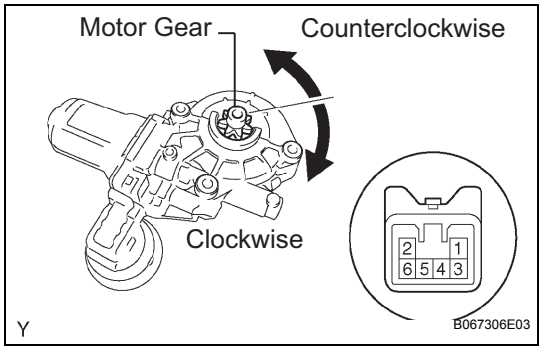

(a) Remove the power window regulator motor.
(b) Apply battery voltage to the motor connector according to the table below.

NOTICE:
Do not apply battery to any terminals except terminals 1 and 2.

Standard

Measurement Condition	Specified Condition
Battery positive (+) → Terminal 2 (D) Battery negative (-) → Terminal 1(U)	Motor gear rotates clockwise
Battery positive (+) → Terminal 1 (U) Battery negative (-) → Terminal 2 (D)	Motor gear rotates counterclockwise

NG → **REPLACE POWER WINDOW REGULATOR MOTOR (REAR LH)**

OK

2	CHECK WIRE HARNESS (WINDOW REGULATOR MOTOR - POWER WINDOW REGULATOR SWITCH)

Wire Harness Side:

K4
Power Window Regulator
Motor Assembly (Rear LH)

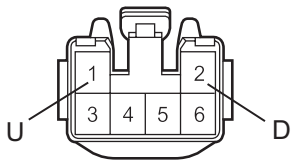

K2
Power Window Regulator
Switch Assembly (Rear LH)

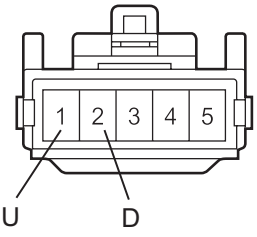

(a) Disconnect the K2 and K4 connectors.
(b) Measure the resistance of the wire harness side connectors.

Resistance

Tester Connection	Condition	Specified Condition
K4-1 - K2-3	Always	Below 1 Ω
K4-2 - K2-1	Always	Below 1 Ω
K4-1 - Body ground	Always	10 kΩ or higher
K4-2 - Body ground	Always	10 kΩ or higher

NG → **REPAIR OR REPLACE HARNESS OR CONNECTOR**

OK

PROCEED TO NEXT INSPECTION SHOWN IN PROBLEM SYMPTOMS TABLE

WS

Rear Power Window Motor RH Circuit

DESCRIPTION

This circuit transmits signal from the power window regulator switch assembly (Rear RH) to power window regulator motor assembly (Rear RH).

WIRING DIAGRAM

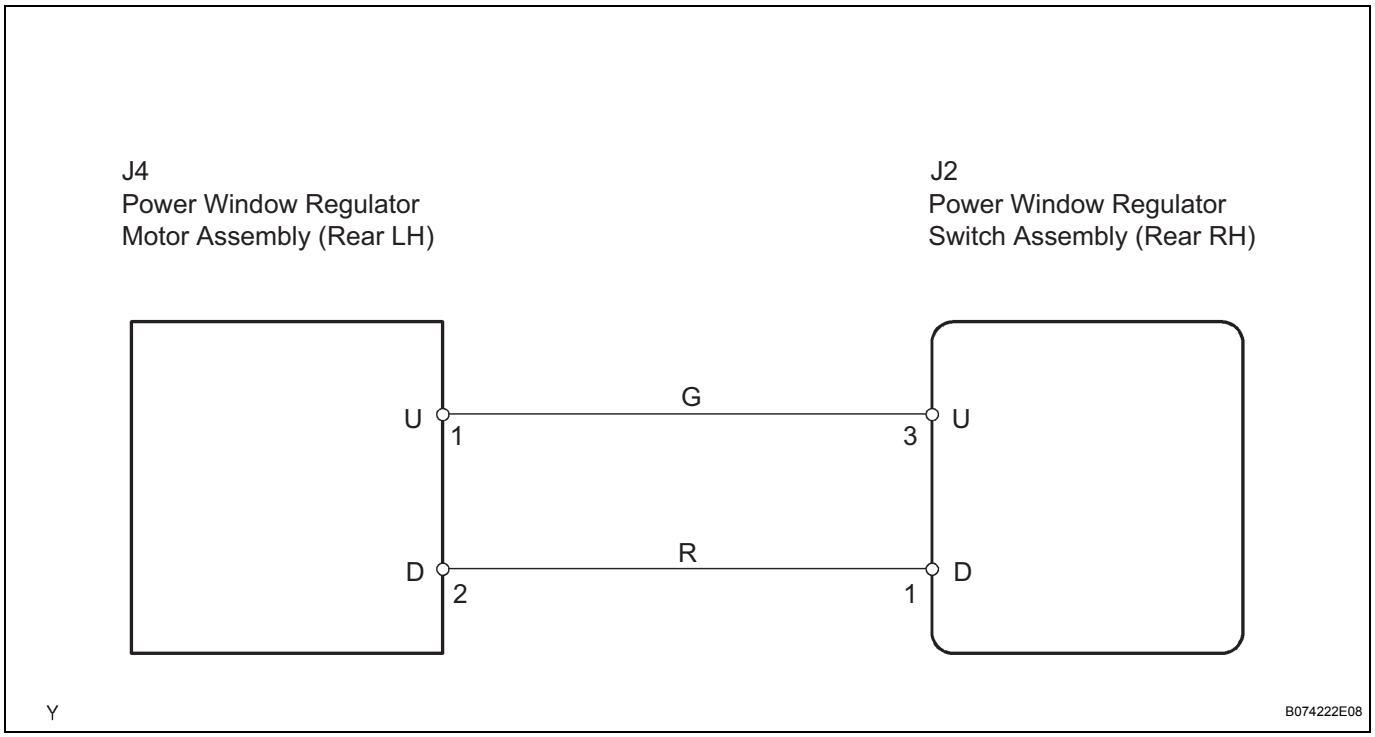

INSPECTION PROCEDURE

1	INSPECT POWER WINDOW REGULATOR MOTOR (REAR RH)

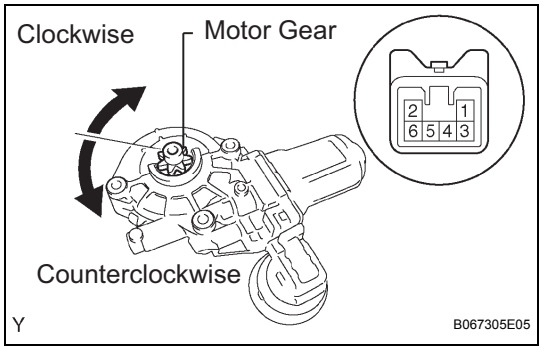

(a) Remove the power window regulator motor.
(b) Apply battery voltage to the motor connector according to the table below.

NOTICE:
Do not apply battery voltage to any terminals except terminals 1 and 2.

Standard

Measurement Condition	Specified Condition
Battery positive (+) → Terminal 1 (U) Battery negative (-) → Terminal 2 (D)	Motor gear rotates clockwise
Battery positive (+) → Terminal 2 (D) Battery negative (-) → Terminal 1 (U)	Motor gear rotates counterclockwise

NG → **REPLACE POWER WINDOW REGULATOR MOTOR (REAR RH)**

OK

WS

2	CHECK WIRE HARNESS (WINDOW REGULATOR MOTOR - POWER WINDOW REGULATOR SWITCH)

Wire Harness Side:

J4
Power Window Regulator
Motor Assembly (Rear RH)

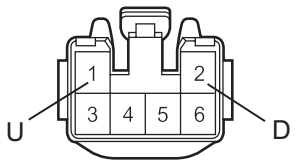

J2
Power Window Regulator
Switch Assembly (Rear RH)

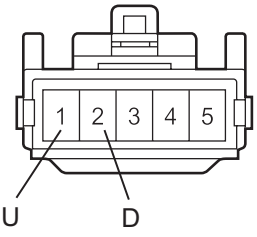

(a) Disconnect the J2 and J4 connectors.
(b) Measure the resistance of the wire harness side connectors.

Resistance

Tester Connection	Condition	Specified Condition
J4-1 - J2-3	Always	Below 1 Ω
J4-2 - J2-1	Always	Below 1 Ω
J4-1 - Body ground	Always	10 kΩ or higher
J4-2 - Body ground	Always	10 kΩ or higher

NG → **REPAIR OR REPLACE HARNESS OR CONNECTOR**

OK

PROCEED TO NEXT CIRCUIT INSPECTION SHOWN IN PROBLEM SYMPTOM TABLE

Window Lock Signal Circuit

DESCRIPTION

When the window lock switch on the multiplex network master switch is in the LOCK position, the front passenger door power window regulator and rear LH and RH power window switches cannot operate their respective power windows.

WIRING DIAGRAM

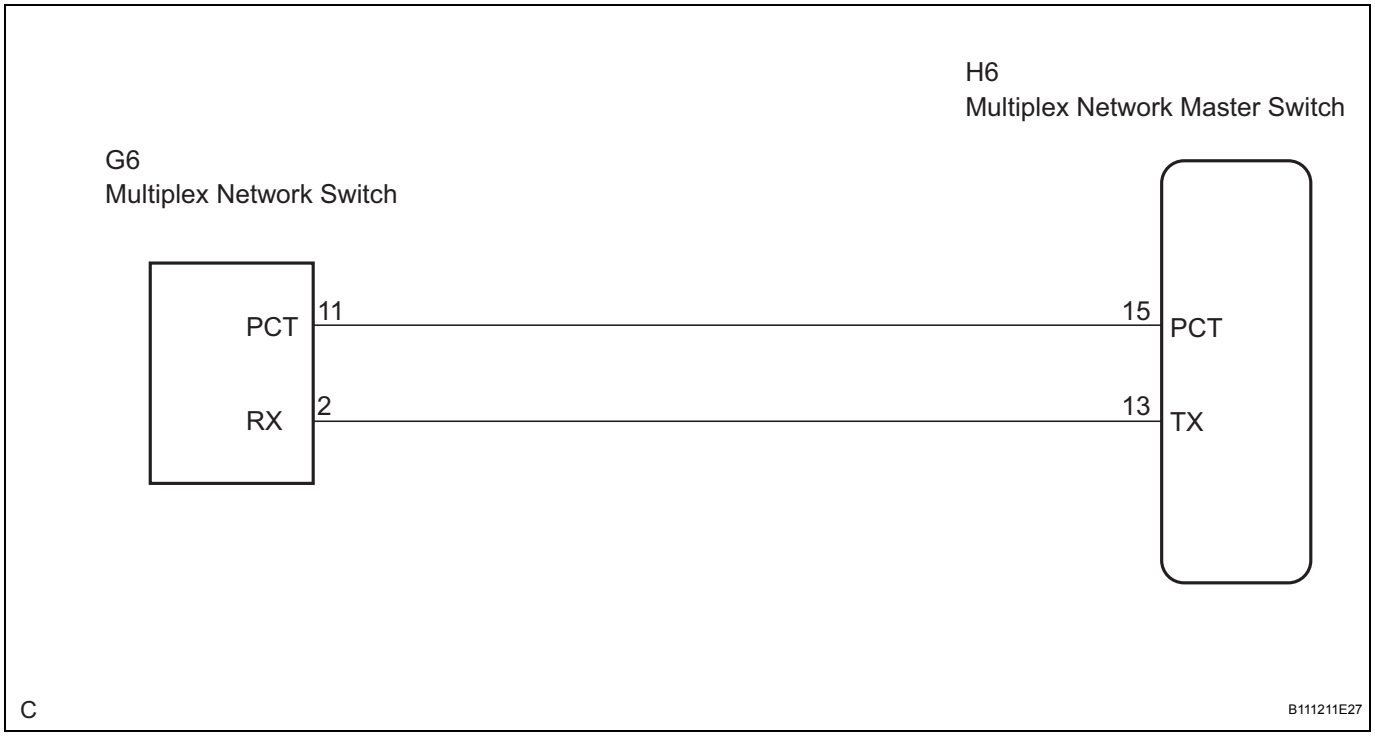

WS

INSPECTION PROCEDURE

1	CHECK MULTIPLEX NETWORK MASTER SWITCH ASSEMBLY

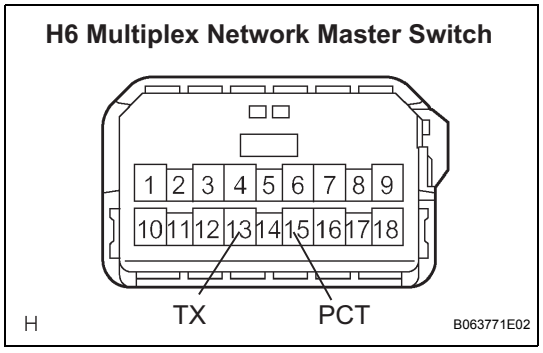

(a) Remove the multiplex network master switch with connector still connected.
(b) Measure the voltage of the wire harness side connector.
Standard voltage

Switch Condition	Tester Connection	Specified Condition
H6-15 (PCT) - Body ground	Window lock switch is OFF → ON	0 V → 2 V or less
H6-13 (TX) - Body ground	Ignition switch ON	10 to 14 V

NG → **REPLACE MULTIPLEX NETWORK MASTER SWITCH ASSEMBLY**

OK

2	CHECK WIRE HARNESS (MULTIPLEX NETWORK MASTER SWITCH - MULTIPLEX NETWORK SWITCH)

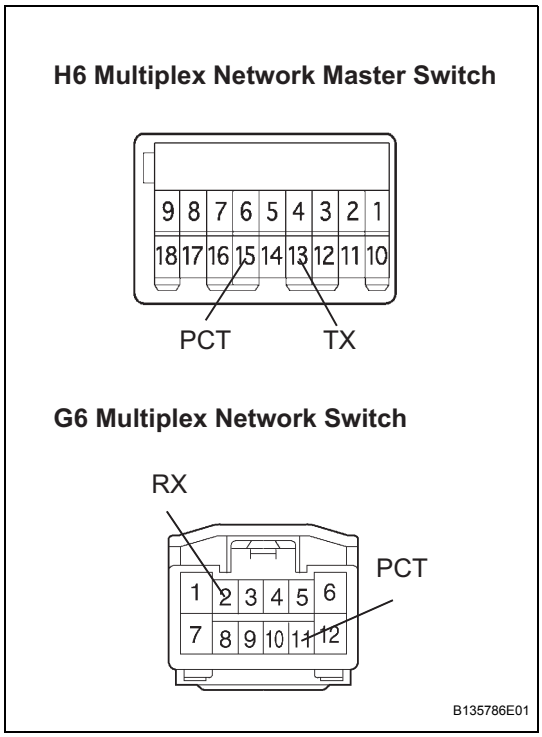

(a) Disconnect the H6 and G6 connectors.
(b) Measure the resistance of the wire harness side connector.

Standard resistance

Switch Condition	Tester Connection	Specified Condition
H6-15 (PCT) - G6-11 (PCT)	Always	Below 1 Ω
H6-15 (PCT) - Body ground	Always	10 kΩ or higher
H6-13 (TX) - G6-2 (RX)	Always	Below 1 Ω
H6-13 (TX) - Body ground	Always	10 kΩ or higher

NG → **REPAIR OR REPLACE HARNESS AND CONNECTOR**

OK

WS

PROCEED TO NEXT CIRCUIT INSPECTION SHOWN PROBLEM SYMPTOMS TABLE

Multiplex Network Switch Assembly:

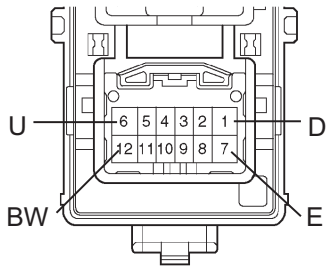

FRONT PASSENGER SIDE POWER WINDOW SWITCH

INSPECTION

1. INSPECT FRONT PASSENGER POWER WINDOW SWITCH ASSEMBLY

(a) Remove the multiplex network switch assembly.

(b) Measure the resistance of the switch when the switch is operated.

Resistance

Switch Condition	Tester Connection	Specified Condition
AUTO UP	1 (D) - 7 (E) 6 (U) - 12 (BW)	Below 1 Ω
UP	1 (D) - 7 (E) 6 (U) - 12 (BW)	Below 1 Ω
OFF	1 (D) - 7 (E) 6 (U) - 7 (E)	Below 1 Ω
DOWN	6 (U) - 7 (E) 1 (D) - 12 (BW)	Below 1 Ω
AUTO DOWN	6 (U) - 7 (E) 1 (D) - 12 (BW)	Below 1 Ω

If the result is not as specified, replace the multiplex network switch assembly.

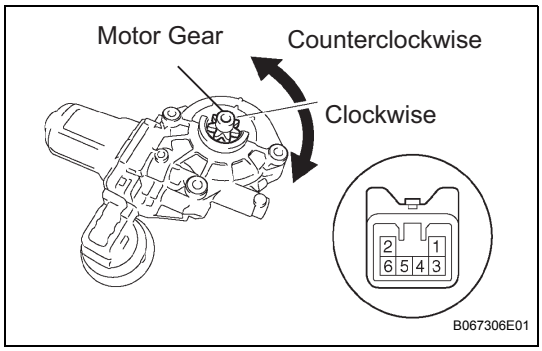

POWER WINDOW REGULATOR MOTOR

INSPECTION

1. INSPECT POWER WINDOW REGULATOR MOTOR ASSEMBLY (for Driver Side)

(a) Check operation of the regulator motor.

(1) Remove the power window regulator motor assembly.

(2) Apply battery voltage to the motor terminals.
NOTICE:
Do not apply voltage to the terminals except 1 and 2.

(3) Check that the motor operates smoothly.
OK

Measurement Condition	Specified Condition
Battery positive (+) → Terminal 2 (U) Battery negative (-) → Terminal 1 (D)	Motor gear rotates clockwise
Battery positive (+) → Terminal 1 (D) Battery negative (-) → Terminal 2 (U)	Motor gear rotates counterclockwise

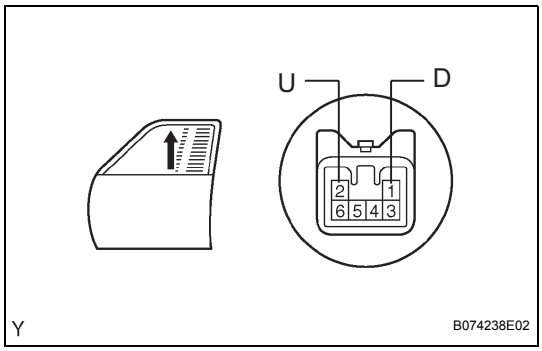

(b) Check the PTC operation inside the regulator motor.
NOTICE:
The work must be performed with the power window regulator and door glass installed in the vehicle.

(1) Disconnect the driver side power window regulator motor connector.

(2) Connect the ammeter's positive (+) lead to terminal 1 (D) of the wire harness side connector and the negative (-) lead to the battery's negative terminal.

(3) Connect the battery's positive (+) lead to terminal 2 (U) of the wire harness side connector, and raise the window to the fully closed position.

(4) Continue to apply voltage, and check that the current changes to less than 1 A within 4 to 90 seconds.

(5) Disconnect the leads from the terminals.

(6) Approximately 60 seconds later, connect the battery's positive (+) lead to terminal 1 (D) and the negative (-) lead to terminal 2 (U). Check that the window begins to descend.
If the result is not as specified, replace the motor assembly.

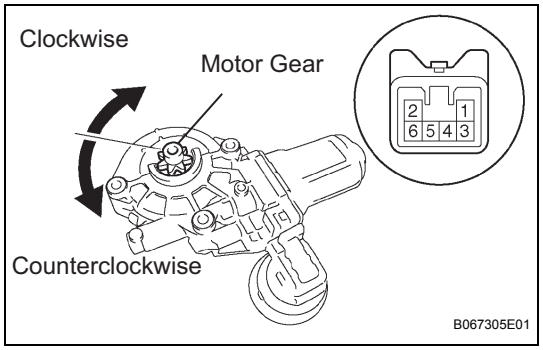

2. INSPECT POWER WINDOW REGULATOR MOTOR ASSEMBLY

(a) Check operation of the regulator motor.

(1) Remove the power window regulator motor assembly.

(2) Apply battery voltage to the motor terminals.
NOTICE:
Do not apply voltage to the terminals except 1 and 2.

(3) Check that the motor operates smoothly.
OK

Measurement Condition	Specified Condition
Battery positive (+) → Terminal 1 (D) Battery negative (-) → Terminal 2 (U)	Motor gear rotates clockwise
Battery positive (+) → Terminal 2 (U) Battery negative (-) → Terminal 1 (D)	Motor gear rotates counterclockwise

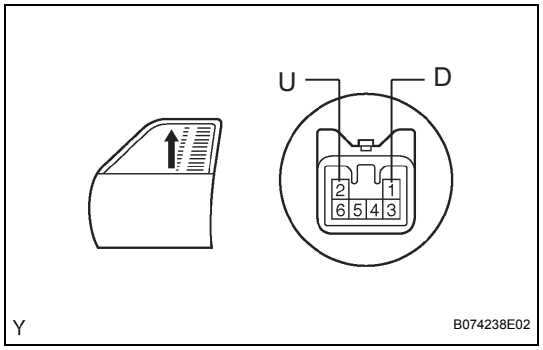

(b) Check the PTC operation inside the regulator motor.
NOTICE:
The work must be performed with the power window regulator and door glass installed in the vehicle.

(1) Disconnect the driver side power window regulator motor connector.

(2) Connect the ammeter's positive (+) lead to terminal 2 (U) of the wire harness side connector and the negative (-) lead to the battery's negative terminal.

(3) Connect the battery's positive (+) lead to terminal 1 (D) of the wire harness side connector, and raise the window to the fully closed position.

(4) Continue to apply voltage, and check that the current changes to less than 1 A within 4 to 90 seconds.

(5) Disconnect the leads from the terminals.

(6) Approximately 60 seconds later, connect the battery's positive (+) lead to terminal 2 (U) and the negative (-) lead to terminal 1 (D). Check that the window begins to descend.
If the result is not as specified, replace the motor assembly.

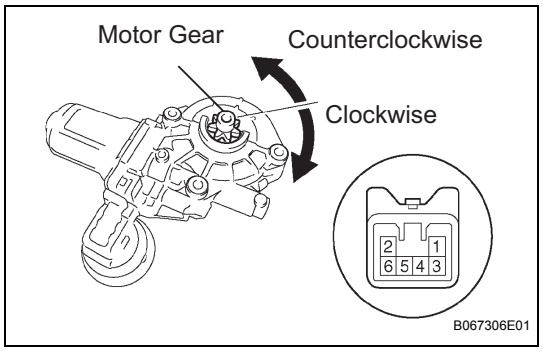

3. INSPECT POWER WINDOW REGULATOR MOTOR ASSEMBLY (for Rear LH)

(a) Check operation of the regulator motor.

(1) Remove the power window regulator motor assembly.

(2) Apply battery voltage to the motor terminals.
NOTICE:
Do not apply voltage to the terminals except 1 and 2.

WS

(3) Check that the motor operates smoothly.
OK

Measurement Condition	Specified Condition
Battery positive (+) → Terminal 2 (D) Battery negative (-) → Terminal 1 (U)	Motor gear rotates clockwise
Battery positive (+) → Terminal 1 (U) Battery negative (-) → Terminal 2 (D)	Motor gear rotates counterclockwise

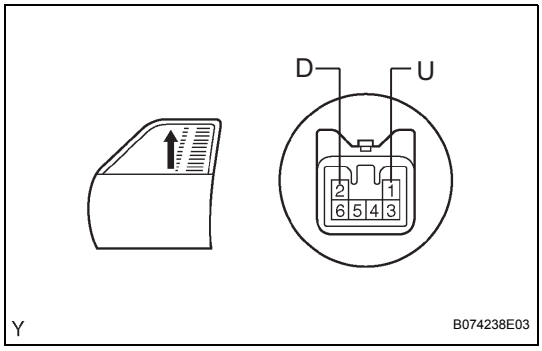

(b) Check the PTC operation inside the regulator motor.
NOTICE:
The work must be performed with the power window regulator and door glass installed in the vehicle.
(1) Disconnect the driver side power window regulator motor connector.
(2) Connect the ammeter's positive (+) lead to terminal 1 (U) of the wire harness side connector and the negative (-) lead to the battery's negative terminal.
(3) Connect the battery's positive (+) lead to terminal 2 (D) of the wire harness side connector, and raise the window to the fully closed position.
(4) Continue to apply voltage, and check that the current changes to less than 1 A within 4 to 90 seconds.
(5) Disconnect the leads from the terminals.
(6) Approximately 60 seconds later, connect the battery's positive (+) lead to terminal 1 (U) and the negative (-) lead to terminal 2 (D). Check that the window begins to descend.
If the result is not as specified, replace the motor assembly.

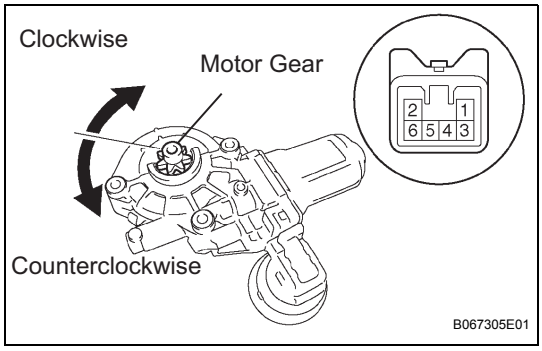

4. INSPECT POWER WINDOW REGULATOR MOTOR ASSEMBLY (for Rear RH)

(a) Check operation of the regulator motor.
(1) Remove the power window regulator motor assembly.
(2) Apply battery voltage to the motor terminals.
NOTICE:
Do not apply voltage to the terminals except 1 and 2.
(3) Check that the motor operates smoothly.
OK

Measurement Condition	Specified Condition
Battery positive (+) → Terminal 1 (U) Battery negative (-) → Terminal 2 (D)	Motor gear rotates clockwise
Battery positive (+) → Terminal 2 (D) Battery negative (-) → Terminal 1 (U)	Motor gear rotates counterclockwise

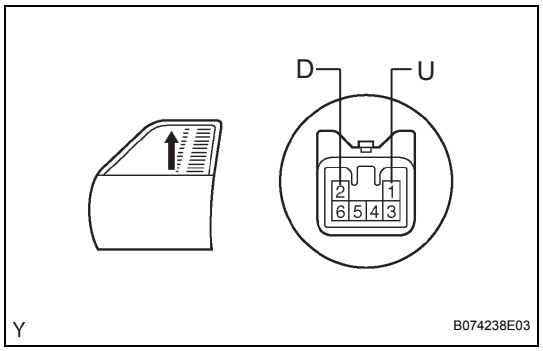

(b) Check the PTC operation inside the regulator motor.
NOTICE:
The work must be performed with the power window regulator and door glass installed in the vehicle.
(1) Disconnect the driver side power window regulator motor connector.
(2) Connect the ammeter's positive (+) lead to terminal 2 (D) of the wire harness side connector and the negative (-) lead to the battery's negative terminal.
(3) Connect the battery's positive (+) lead to terminal 1 (U) of the wire harness side connector, and raise the window to the fully closed position.
(4) Continue to apply voltage, and check that the current changes to less than 1 A within 4 to 90 seconds.
(5) Disconnect the leads from the terminals.
(6) Approximately 60 seconds later, connect the battery's positive (+) lead to terminal 2 (D) and the negative (-) lead to terminal 1 (U). Check that the window begins to descend.
If the result is not as specified, replace the motor assembly.

WINDSHIELD GLASS

COMPONENTS

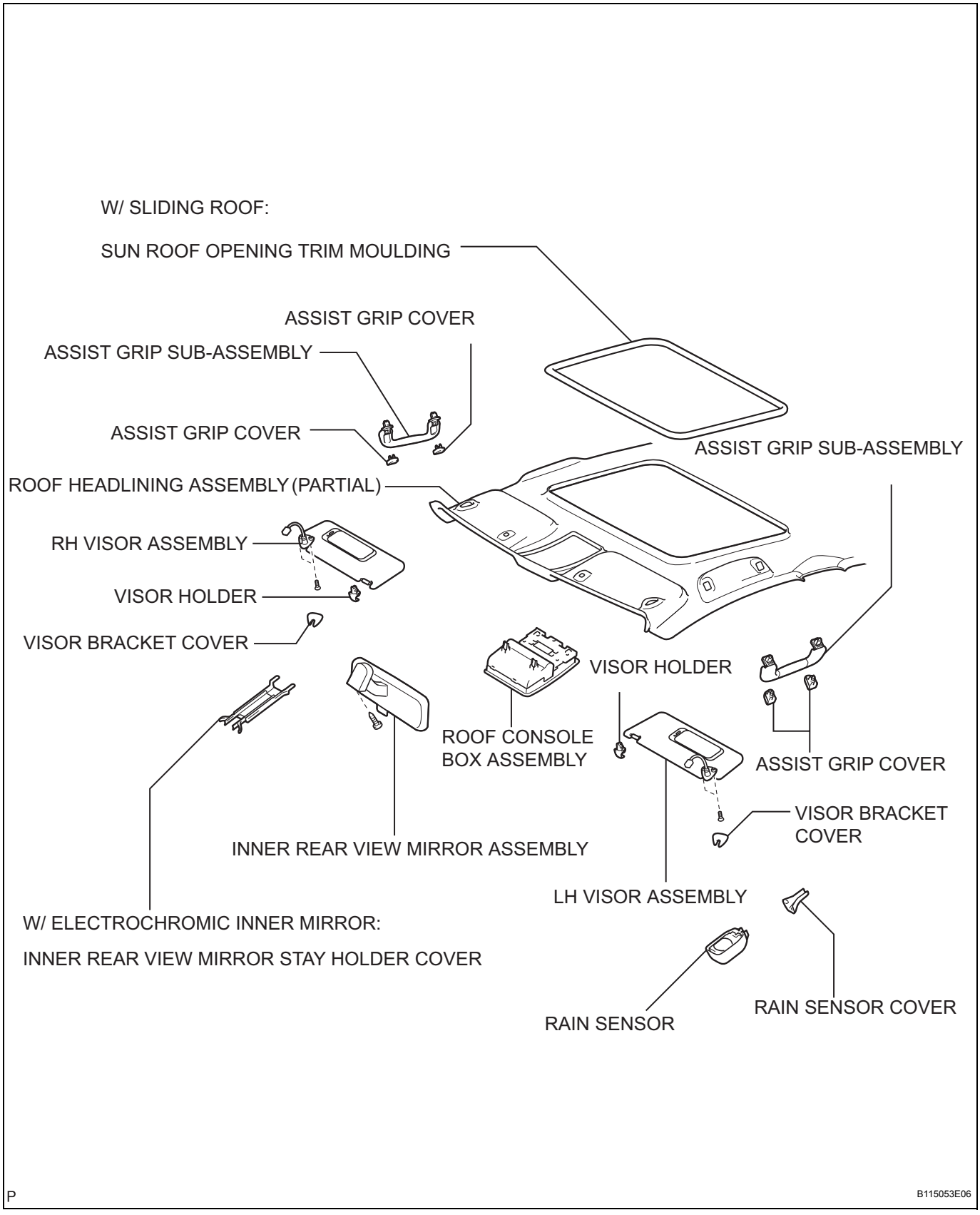

REMOVAL

HINT:
However, only installation procedures requiring additional information are included.

1. **REMOVE WINDSHIELD WIPER ARM AND BLADE ASSEMBLY LH (See page WW-38)**
2. **REMOVE WINDSHIELD WIPER ARM AND BLADE ASSEMBLY RH (See page WW-38)**
3. **REMOVE COWL TOP VENTILATOR LOUVER RH (See page WW-38)**
4. **REMOVE FRONT DOOR OPENING TRIM WEATHERSTRIP LH**
5. **REMOVE FRONT DOOR OPENING TRIM WEATHERSTRIP RH**
6. **REMOVE FRONT PILLAR GARNISH LH (See page IR-15)**
7. **REMOVE FRONT PILLAR GARNISH RH (See page IR-15)**
8. **REMOVE ASSIST GRIP SUB-ASSEMBLY FRONT (See page IR-15)**
9. **REMOVE ASSIST GRIP SUB-ASSEMBLY (See page IR-15)**
10. **REMOVE VISOR BRACKET COVER (See page IR-16)**
11. **REMOVE LH VISOR ASSEMBLY (See page IR-16)**
12. **REMOVE RH VISOR ASSEMBLY (See page IR-16)**
13. **REMOVE ROOF CONSOLE BOX ASSEMBLY (See page IR-16)**
14. **REMOVE VISOR HOLDER (See page IR-17)**
15. **REMOVE INNER REAR VIEW MIRROR STAY HOLDER COVER (See page MI-35)**
16. **REMOVE RAIN SENSOR COVER (See page WW-52)**
17. **REMOVE RAIN SENSOR (See page WW-52)**
18. **REMOVE SUN ROOF OPENING TRIM MOULDING (w/ Sliding Roof) (See page IR-17)**
19. **REMOVE ROOF HEADLINING ASSEMBLY (See page IR-17)**

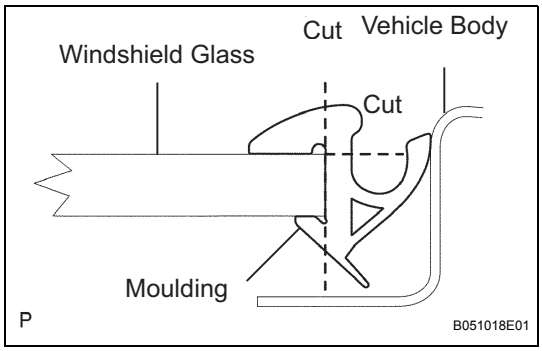

20. REMOVE WINDSHIELD MOULDING OUTER UPPER

(a) Using a knife, cut off the moulding as shown in the illustration.

NOTICE:

Be careful not to damage the vehicle body with the knife.

(b) Remove the remaining moulding.

HINT:

Partially cut the moulding. Then pull and remove it by hand.

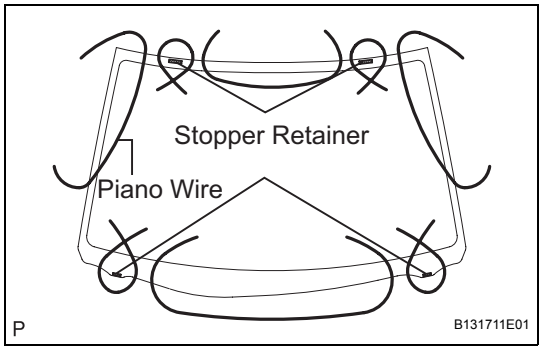

21. REMOVE WINDSHIELD GLASS

(a) From the interior, insert piano wires between the vehicle body and glass as shown in the illustration.

(b) Tie objects that can serve as handles to all wire ends.

HINT:

Apply protective tape to the outer surface of the vehicle body to prevent its surface from being scratched.

NOTICE:

- **w/ Curtain shield airbag:**
  When working around the curtain shield airbag, be careful not to damage the airbag.
- **When separating the glass from the vehicle, be careful not to damage the vehicle's paint or interior/exterior ornaments.**
- **To prevent the safety pad from being scratched when removing the glass, place a plastic sheet between the piano wire and safety pad.**

(c) Cut through the adhesive by pulling the piano wire around the glass.

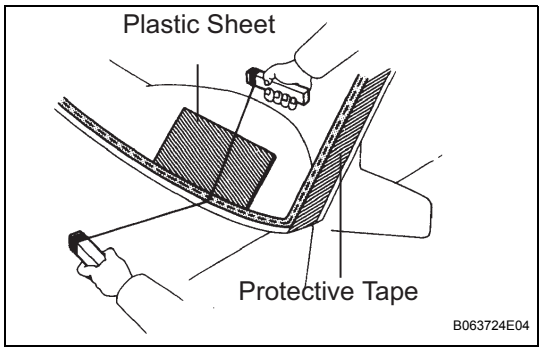

WS

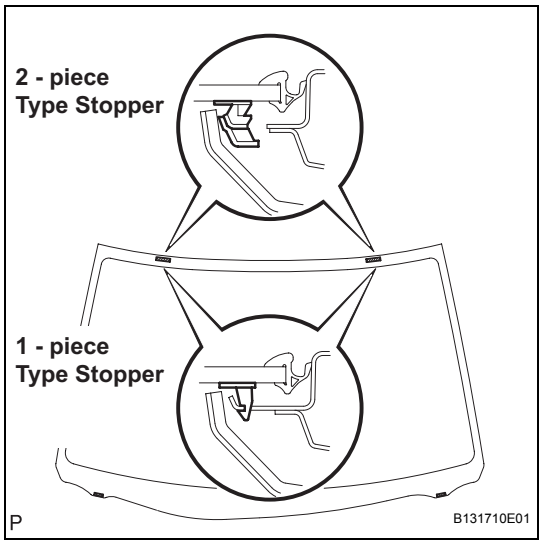

(d) Disengage the stoppers.
HINT:
In some cases, both 1-piece type and 2-piece type stoppers are installed in the same vehicle.

(e) Using a suction cup, remove the glass.
NOTICE:
Leave as much adhesive on the vehicle body as possible when removing the glass.

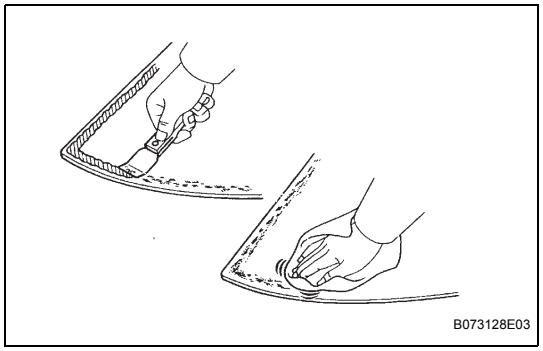

22. CLEAN WINDSHIELD GLASS

(a) Using a scraper, remove the damaged stoppers, the damaged any adhesive remaining the glass.

(b) Clean the outer circumference on of the glass with white gasoline.
NOTICE:
- **Do not tough the glass after cleaning it.**
- **Even if using new glass, clean the glass with white gasoline.**

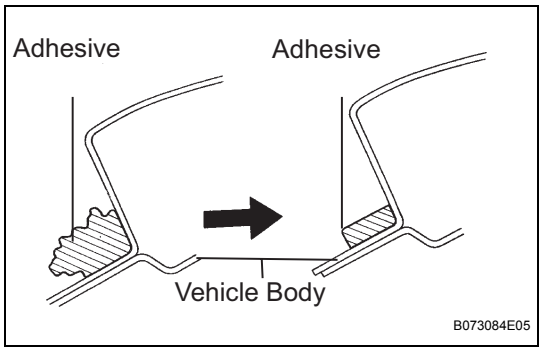

23. CLEAN VEHICLE BODY

(a) Clean and shape the contact surface of the vehicle body.

(1) Using a knife, cut away any rough adhesive on the contact surface of the vehicle body to ensure a proper fit.
NOTICE:
Be careful not to damage the vehicle body.
HINT:
Leave as much adhesive on the vehicle body as possible.

(2) Clean the contact surface of the vehicle body with a shop rag or piece of cloth saturated with cleaner.
HINT:
Even if all the adhesive has been removed, clean the vehicle body.

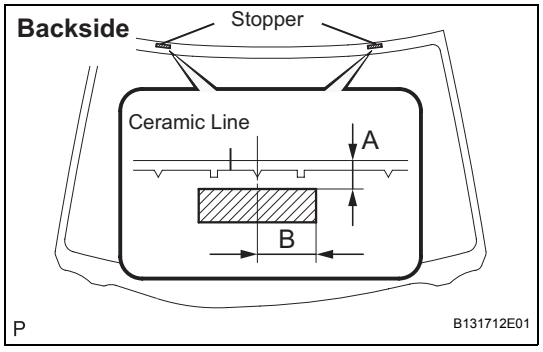

INSTALLATION

1. INSTALL WINDSHIELD GLASS STOPPER NO.2

(a) Coat the installation part of the stopper with Primer G.
NOTICE:
- **Allow the primer coating to dry for 3 minutes or more.**
- **Dispose of any excess Primer G.**
- **Do not apply too much Primer G.**

WS

(b) Install 2 new stoppers onto the glass as shown in the illustration.
Specification

Area	Measurement
A	7.7 mm (0.303 in.)
B	40.0 mm (1.575 in.)

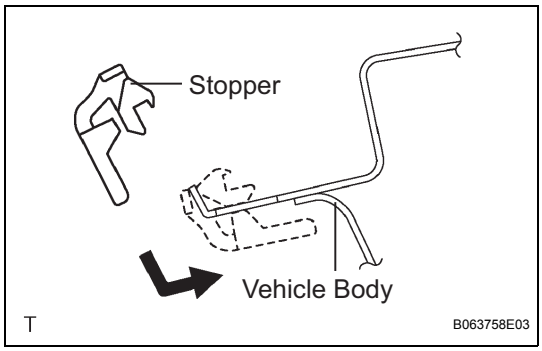

2. INSTALL WINDSHIELD GLASS STOPPER NO.1
(a) Install 2 new stoppers to the vehicle body as shown in the illustration.

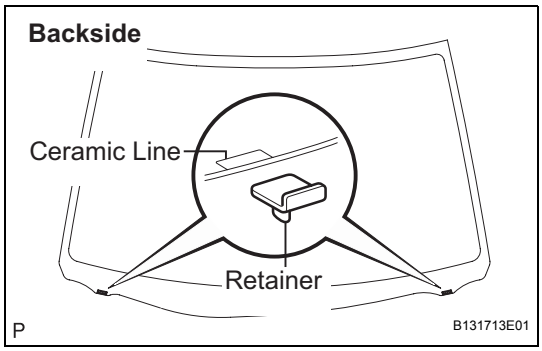

3. INSTALL WINDSHIELD GLASS RETAINER
(a) Install 2 new retainers onto the glass as shown in the illustration.

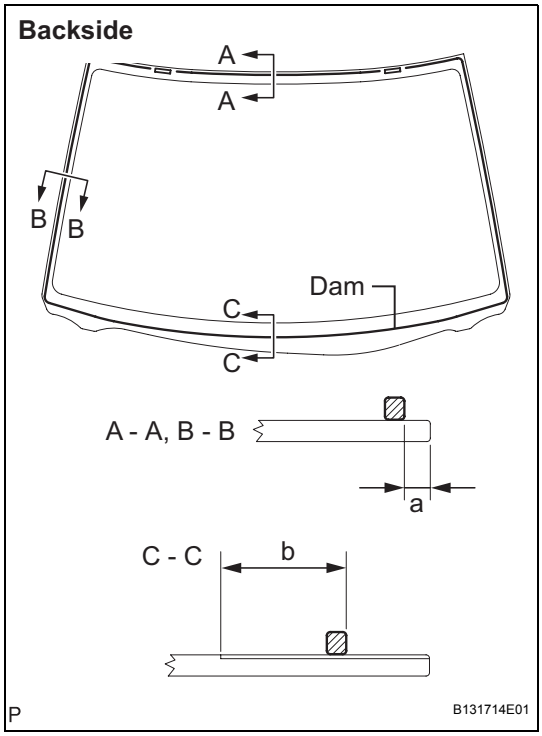

4. INSTALL WINDOW GLASS ADHESIVE DAM
(a) Coat the installation part of the windshield glass adhesive dam with Primer G.
NOTICE:
- **Allow the primer coating to dry for 3 minutes or more.**
- **Dispose of any excess Primer G.**
- **Do not apply too much primer.**

(b) Install a new dam as shown in the illustration.
Specification

Area	Measurement
a	7.0 mm (0.276 in.)
b	48.4 mm (1.905 in.)

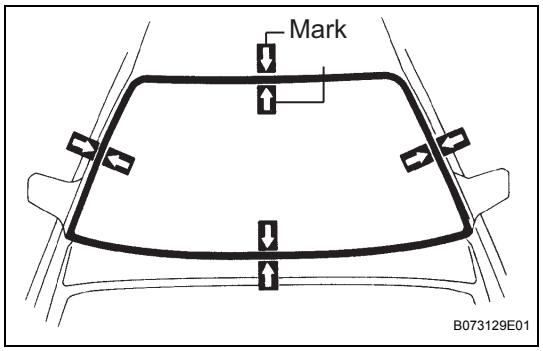

5. INSTALL WINDSHIELD GLASS

(a) Position the glass.

(1) Using the suction cup, place the glass in the correct position.

(2) Check that the whole contact surface of the glass rim is perfectly even.

(3) Place reference marks on the glass and vehicle body.

NOTICE:

Check that the stoppers are attached to the vehicle body correctly.

HINT:

When reusing the glass, check and correct the reference mark positions.

(4) Using a suction cup, remove the glass.

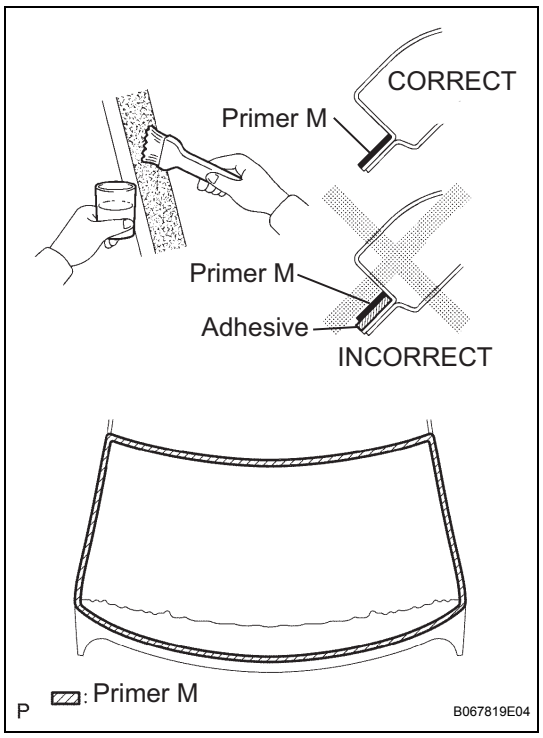

(b) Using a brush, coat the exposed areas of the vehicle body, where all adhesive has been removed with Primer M.

NOTICE:

- **Allow the primer coating to dry for 3 minutes or more.**
- **Dispose of any excess Primer M.**
- **Do not apply too much Primer M.**

(c) Using a brush or sponge, coat the edge of the glass and the contact surface with Primer M.

HINT:

If a non-specified area is coated by accident, wipe off the primer with a clean piece of cloth before it dries.

NOTICE:

- **Allow the primer coating to dry for 3 minutes or more.**
- **Dispose of away any excess Primer M.**
- **Do not apply too much Primer M.**

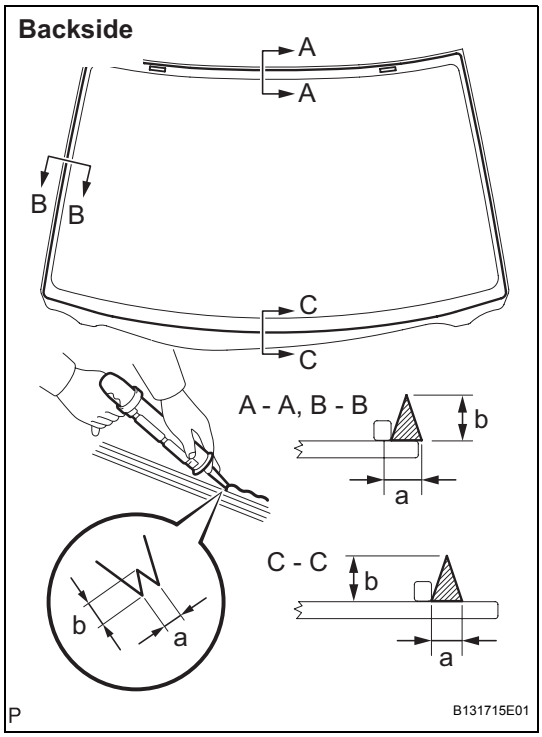

(d) Apply adhesive.

Adhesive:

Part No. 00850-00801 or equivalent

(1) Cut off the tip of the cartridge nozzle as shown in the illustration.

HINT:

After cutting off the tip, use adhesive within the time described in the table below.

Usage time frame

Temperature	Usage time frame
35°C(95°F)	15 minutes
20°C(68°F)	1 hour 40 minutes
5°C(41°F)	8 hour

(2) Load a sealer gun with the cartridge.

(3) Coat the glass with adhesive as shown in the illustration.

Specification

Area	Measurement
a	8.0 mm (0.315 in.)
b	12.0 mm (0.472 in.)

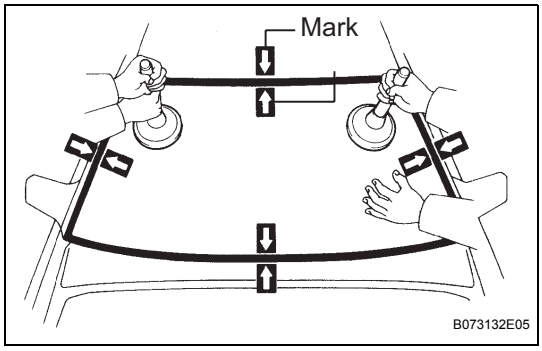

(e) Install the glass.

(1) Using a suction cup, position the glass so that the reference marks are aligned. Press it in gently along the rim.

NOTICE:

- **Allow the primer coating to dry for 3 minutes or more.**
- **Check that the stoppers are attached to the vehicle body correctly.**
- **Check that there is a small gap between the vehicle body and glass.**

(2) Lightly press the front surface of the glass to ensure that the glass is securely fit to the vehicle body.

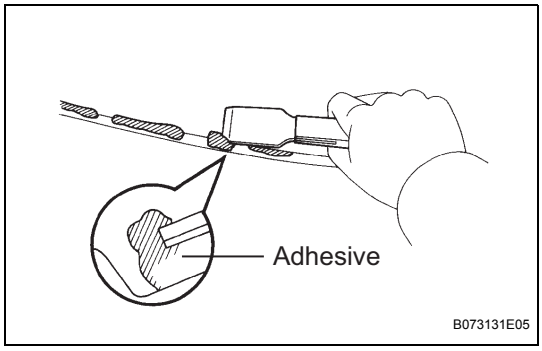

(3) Using a scraper, remove any excess or protruding adhesive (Procedure A).

HINT:

Make sure that adhesive is applied up to the glass rim.

NOTICE:

The vehicle should not be driven until the time indicated in the table below has elapsed after procedure A.

Minimum time

Temperature	Minimum time prior to driving vehicle
35°C(95°F)	1 hour 30 minutes
20°C(68°F)	5 hours
5°C(41°F)	24 hours

WS

6. **INSTALL WINDSHIELD MOULDING OUTER UPPER**
   (a) Using a brush or sponge, coat the edge of the glass and the contact surface with Primer G.
   NOTICE:
   - **Allow the primer coating to dry for 3 minutes or more.**
   - **Dispose of away any excess Primer G.**
   - **Do not apply too much Primer G.**
   (b) Install the moulding.
7. **INSPECT FOR LEAKS AND REPAIR**
   (a) Conduct a leak test after the adhesive has completely hardened.
   (b) Seal any leaks with out glass sealer.
8. **INSTALL ROOF HEADLINING ASSEMBLY**
9. **INSTALL SUN ROOF OPENING TRIM MOULDING**
10. **INSTALL RAIN SENSOR**
11. **INSTALL RAIN SENSOR COVER**
12. **INSTALL INNER REAR VIEW MIRROR STAY HOLDER COVER**
13. **INSTALL VISOR HOLDER**
14. **INSTALL ROOF CONSOLE BOX ASSEMBLY**
15. **INSTALL RH VISOR ASSEMBLY**
16. **INSTALL LH VISOR ASSEMBLY**
17. **INSTALL VISOR BRACKET COVER**
18. **INSTALL ASSIST GRIP SUB-ASSEMBLY**
19. **INSTALL ASSIST GRIP SUB-ASSEMBLY FRONT**
20. **INSTALL FRONT PILLAR GARNISH RH (See page IR-19)**
21. **INSTALL FRONT PILLAR GARNISH LH (See page IR-19)**
22. **INSTALL FRONT DOOR OPENING TRIM WEATHERSTRIP RH**
23. **INSTALL FRONT DOOR OPENING TRIM WEATHERSTRIP LH**
24. **INSTALL COWL TOP VENTILATOR LOUVER RH**
25. **INSTALL WINDSHIELD WIPER ARM AND BLADE ASSEMBLY RH**
26. **INSTALL WINDSHIELD WIPER ARM AND BLADE ASSEMBLY LH**

BACK WINDOW GLASS

COMPONENTS

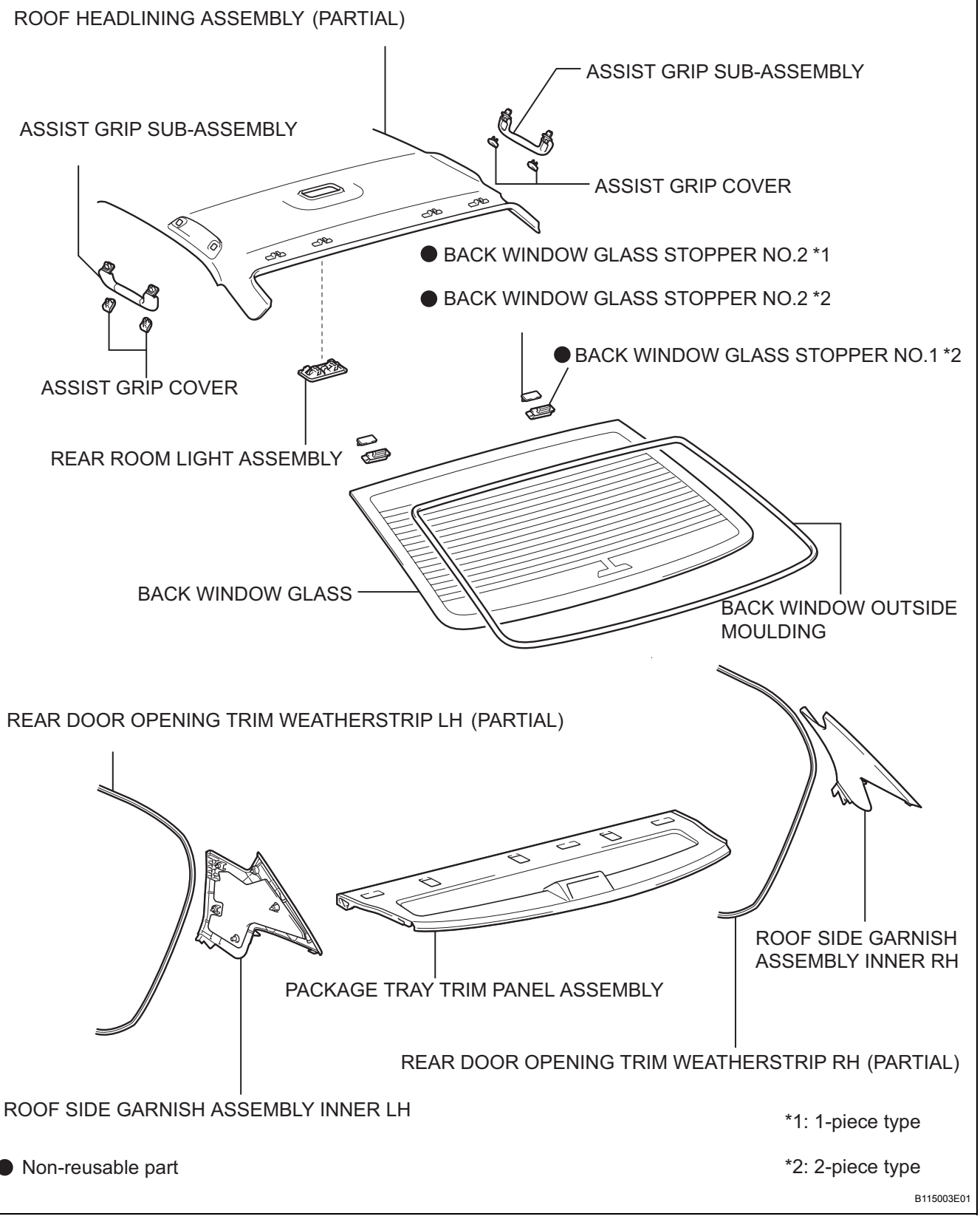

WS

REMOVAL

HINT:
However, only installation procedures requiring additional information are included.

1. **REMOVE REAR DOOR OPENING TRIM WEATHERSTRIP LH**
2. **REMOVE REAR DOOR OPENING TRIM WEATHERSTRIP RH**
3. **REMOVE ROOF SIDE GARNISH ASSEMBLY INNER LH (See page IR-14)**
4. **REMOVE ROOF SIDE GARNISH ASSEMBLY INNER RH (See page IR-14)**
5. **REMOVE PACKAGE TRAY TRIM PANEL ASSEMBLY (See page SB-31)**
6. **REMOVE ASSIST GRIP SUB-ASSEMBLY**
7. **REMOVE REAR ROOM LIGHT ASSEMBLY (See page IR-16)**
8. **REMOVE ROOF HEADLINING ASSEMBLY (See page IR-17)**
9. **REMOVE BACK WINDOW MOULDING OUTSIDE UPPER**
   (a) Using a knife, cut off the moulding, as shown in the illustration.
   NOTICE:
   Be careful not to damage the vehicle body with the knife.
   (b) Remove the remaining moulding.
   HINT:
   Partially cut the moulding. Then pull and remove it by hand.

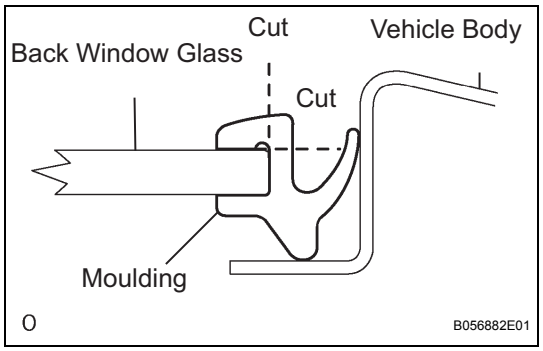

10. **REMOVE BACK WINDOW GLASS**
    (a) From the interior, insert piano wires between the vehicle body and glass as shown in the illustration.
    (b) Tie wooden blocks or other objects that can serve as handles to all wire ends.
    HINT:
    Apply protective tape to the outer surface of the vehicle body to prevent its surface from being scratched.
    NOTICE:
    When separating the grass from the vehicle, be careful not to damage the vehicle's paint or interior/exterior ornaments.

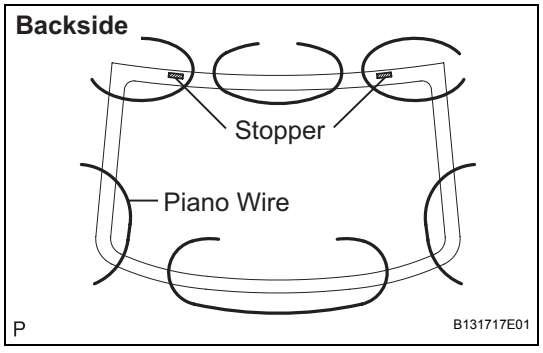

WS

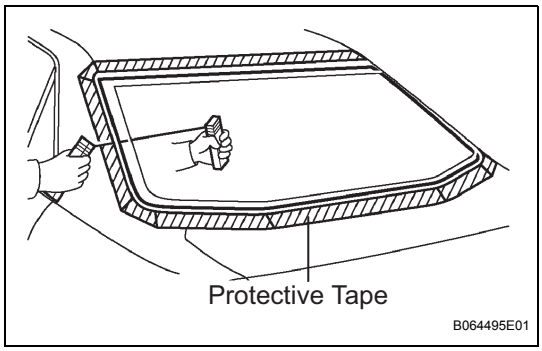

(c) Cut through the adhesive by pulling the piano wire around the glass.

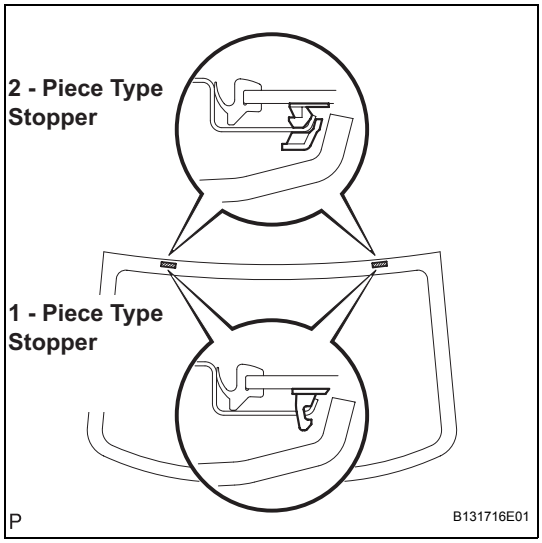

(d) Disengage the stoppers.
HINT:
In some cases, both 1-piece type and 2-piece type stoppers are installed in the same vehicle.

(e) Using a suction cup, remove the glass.
NOTICE:
Leave as much adhesive on the vehicle body as possible when removing the glass.

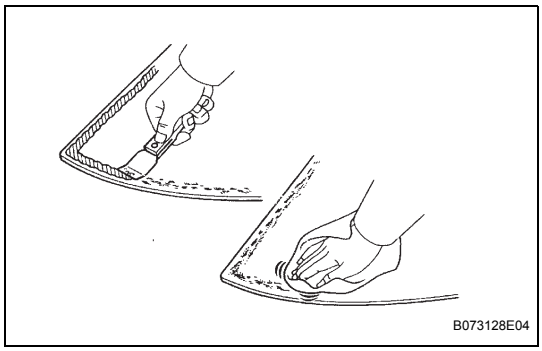

11. CLEAN BACK WINDOW GLASS

(a) Using a scraper, remove the damaged stoppers the damand any adhesive remaining on the glass.

(b) Clean the outer circumference of the glass with white gasoline.
NOTICE:
- **Do not tough the glass after cleaning it.**
- **Even if using new glass, clean the glass with white gasoline.**

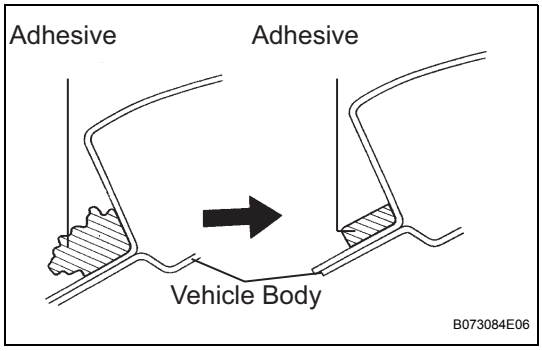

12. CLEAN VEHICLE BODY

(a) Clean and shape the contact surface of the vehicle body.

(1) Using a knife, cut away any rough adhesive on the contact surface of the vehicle body to ensure a proper fit.
NOTICE:
Be careful not to damage the vehicle body.
HINT:
Leave as much adhesive on the vehicle body as possible.

WS

(2) Clean the contact surface of the vehicle body with a piece of a shop rag or piece of cloth saturated with cleaner.
HINT:
Even if all the adhesive has been removed, clean the vehicle body.

INSTALLATION

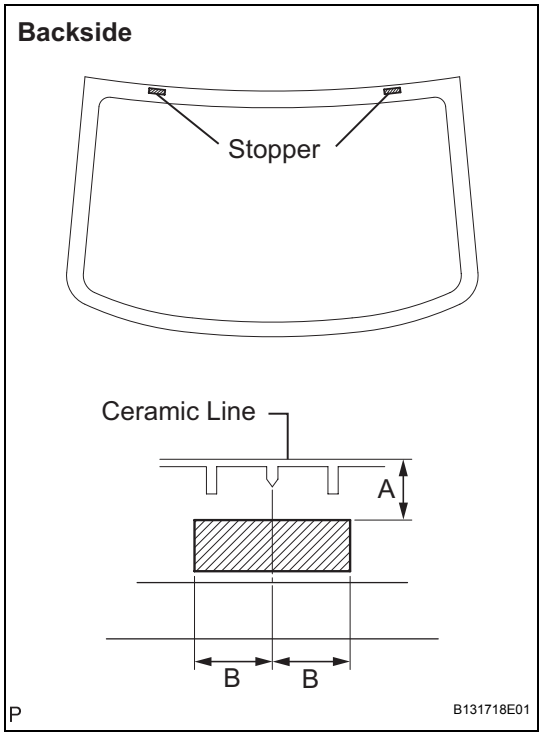

1. INSTALL BACK WINDOW GLASS STOPPER NO.2

(a) Coat the installation part of the stopper with Primer G.
NOTICE:
- **Allow the primer coating to dry for 3 minutes or more.**
- **Dispose of any excess Primer G.**
- **Do not apply too much Primer G.**

(b) Install 2 new stoppers to the glass as shown in the illustration .
Specification

Area	Measurement
A	12.5 mm (0.492 in.)
B	50.0 mm (1.968 in.)

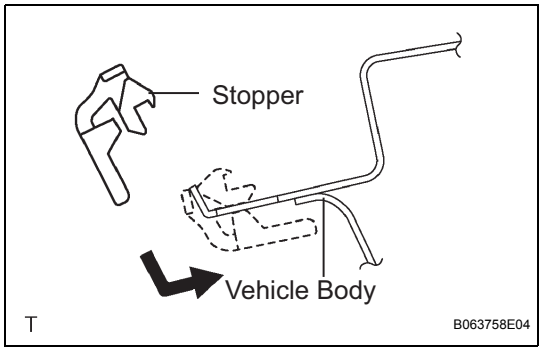

2. INSTALL BACK WINDOW GLASS STOPPER NO.1

(a) Install 2 new stoppers to the vehicle body as shown in the illustration .

3. INSTALL BACK WINDOW MOULDING OUTSIDE UPPER

(a) Using a brush or sponge, coat the edge of the glass and the contact surface with Primer G.
NOTICE:
- **Allow the primer coating to dry for 3 minutes or more.**
- **Dispose of any excess Primer G.**
- **Do not apply too much Primer G.**

(b) Install the moulding.

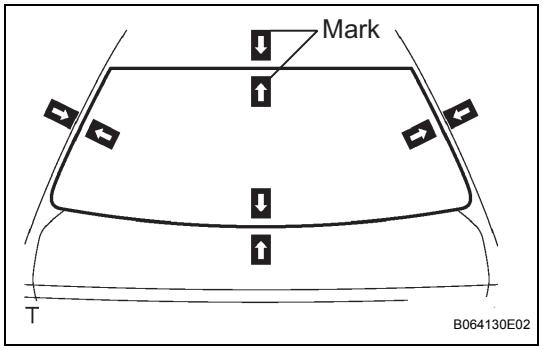

4. INSTALL BACK WINDOW GLASS

(a) Position the glass.
(1) Using a suction cup, place the glass in the correct position.
(2) Check that the whole contact surface of the glass rim perfectly even.
(3) Place reference marks on the glass and vehicle body.
NOTICE:
Check that the stoppers are attached to the vehicle body correctly.

WS

HINT:
When reusing the glass, check and correct the reference mark positions.

(4) Using a suction cup, remove the glass.

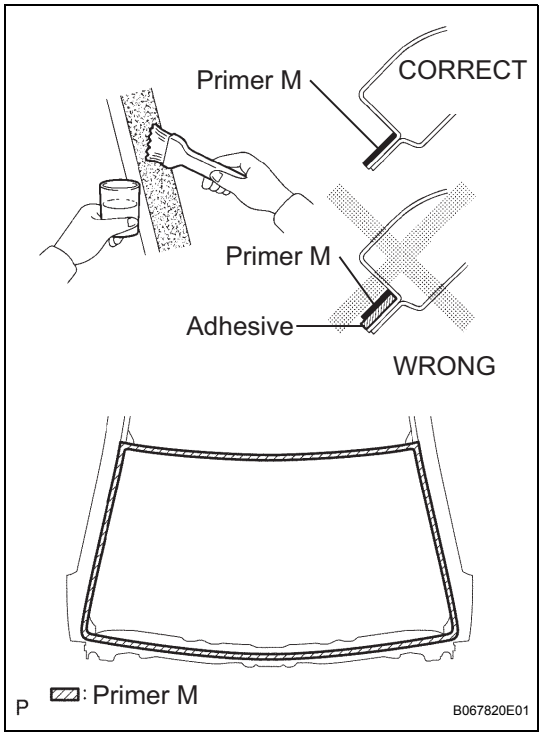

(b) Using a brush, coat the exposed areas of the vehicle body, where all adhesive has been removed with Primer M.

NOTICE:

- **Allow the primer coating to dry for 3 minutes or more.**
- **Do not coat the area adhesive is still remaining with Primer M.**
- **Dispose of any excess Primer M.**
- **Do not apply too much Primer M.**

(c) Using a brush or sponge, coat the edge of the glass and the contact surface with Primer M.

HINT:
If a non-specified area is coated by accident, wipe off the primer with a clean a piece of cloth before it dries out.

NOTICE:

- **Allow the primer coating to dry for 3 minutes or more.**
- **Dispose of any excess Primer M.**
- **Do not apply too much Primer M.**

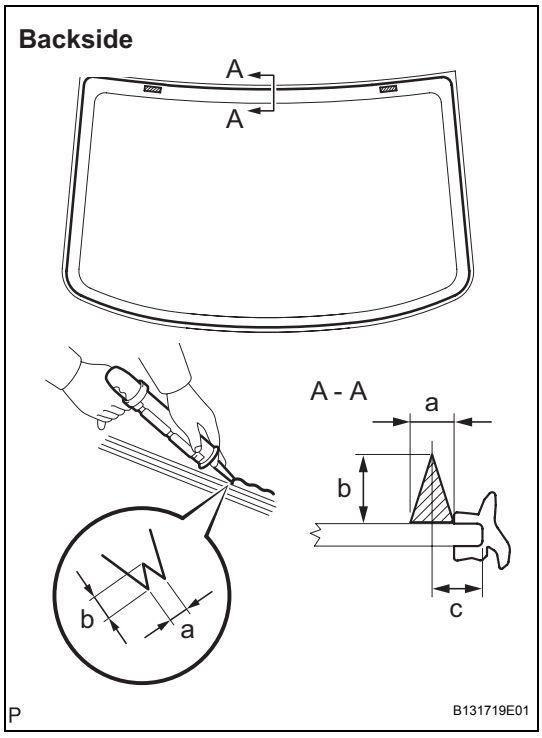

(d) Apply adhesive.

Adhesive:
Part No. 08850-00801 or equivalent

(1) Cut off the tip of the cartridge nozzle as shown in the illustration.

HINT:
After cutting off the tip, use adhesive within the time described in the table below.

Usage time frame

Temperature	Usage time frame
35°C(95°F)	15 minutes
20°C(68°F)	1 hour 40 minutes
5°C(41°F)	8 hours

(2) Load a sealer gun with the cartridge.

(3) Coat the glass with adhesive as shown in the illustration.

Specification

Area	Measurement
a	8.0 mm (0.315 in.)
b	12.0 mm (0.472 in.)
c	7.0 mm (0.275 in.)

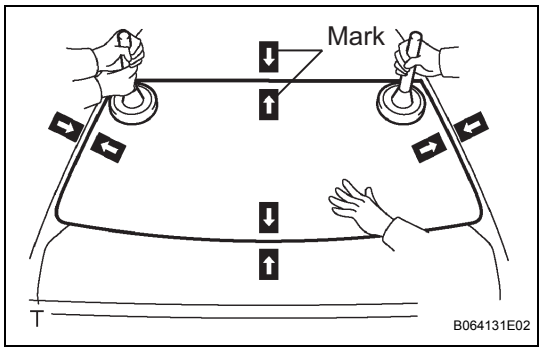

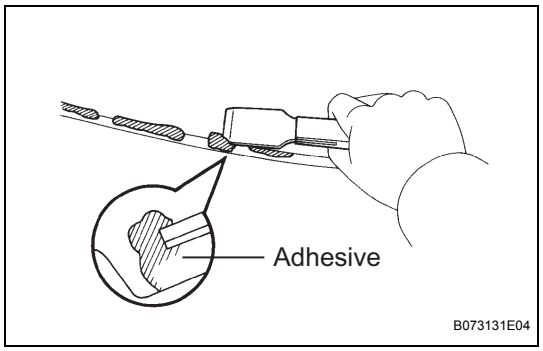

(e) Install the glass.

(1) Using a suction cup, position the glass so that the reference marks are aligned. Press it in gently along the rim.

NOTICE:

- **Allow the primer coating to dry for 3 minutes or more.**
- **Check that the stoppers are attached to the vehicle body correctly.**
- **Check that there is a small gap between the vehicle body and glass.**

(2) Lightly press the front surface of the glass to ensure that the glass is securely fit to the vehicle body.

(3) Using a scraper, remove any excess adhesive.

HINT:

Make sure that adhesive is applied up to the glass rim.

NOTICE:

The vehicle should not be driven until the time indicated in the table below has elapsed after applying adhesive.

Minimum time

Temperature	Minimum time prior to driving vehicle
35°C(95°F)	1 hour 30 minutes
20°C(68°F)	5 hours
5°C(41°F)	24 hours

5. INSPECT FOR LEAKS AND REPAIR

(a) Conduct a leak test after the adhesive has completely hardened.

(b) Seal any leaks with auto glass sealer.

6. INSTALL ROOF HEADLINING ASSY

7. INSTALL REAR ROOM LIGHT ASSEMBLY

8. INSTALL ASSIST GRIP SUB-ASSEMBLY

9. INSTALL PACKAGE TRAY TRIM PANEL ASSEMBLY

10. INSTALL ROOF SIDE GARNISH ASSEMBLY INNER RH (See page IR-19)

11. INSTALL ROOF SIDE GARNISH ASSEMBLY INNER LH (See page IR-19)

12. INSTALL REAR DOOR OPENING TRIM WEATHERSTRIP RH

13. INSTALL REAR DOOR OPENING TRIM WEATHERSTRIP LH

WINDOW DEFOGGER SYSTEM

PRECAUTION

NOTICE:
When disconnecting the negative (-) battery terminal, initialize the following system(s) after the terminal is reconnected.

System Name	See procedure
Power Window Control system	IN-29
Sliding Roof System	IN-29

1. EXPRESSIONS OF IGNITION SWITCH

The type of ignition switch used on this model differs according to the specifications of the vehicle.
The expressions listed in the table below are used in this section.

Switch Type		Ignition Switch (position)	Engine Switch (condition)
Expression	Ignition Switch off	LOCK	Off
	Ignition Switch on (IG)	ON	On (IG)
	Ignition Switch on (ACC)	ACC	On (ACC)
	Engine Start	START	Start

PARTS LOCATION

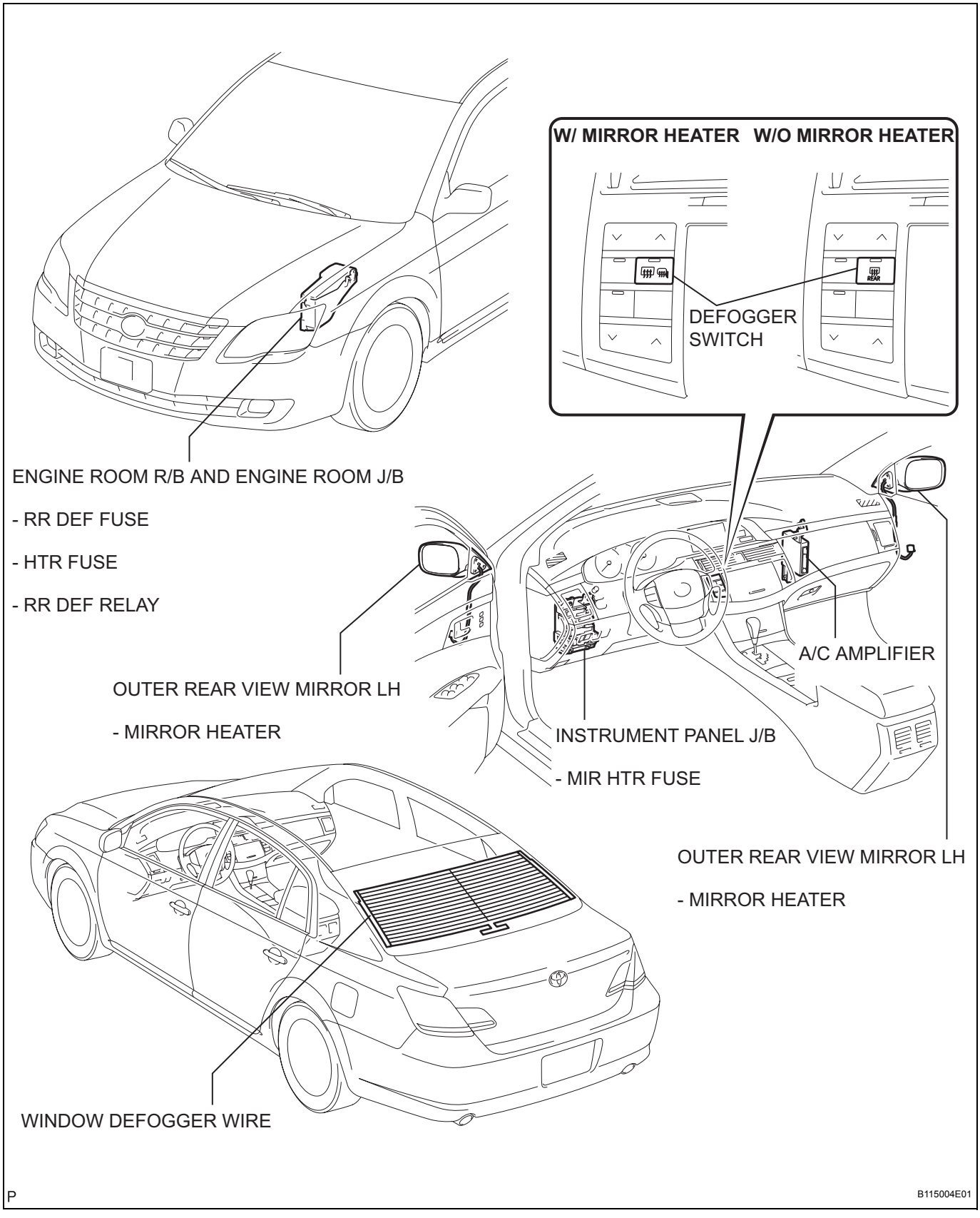

WS

SYSTEM DIAGRAM

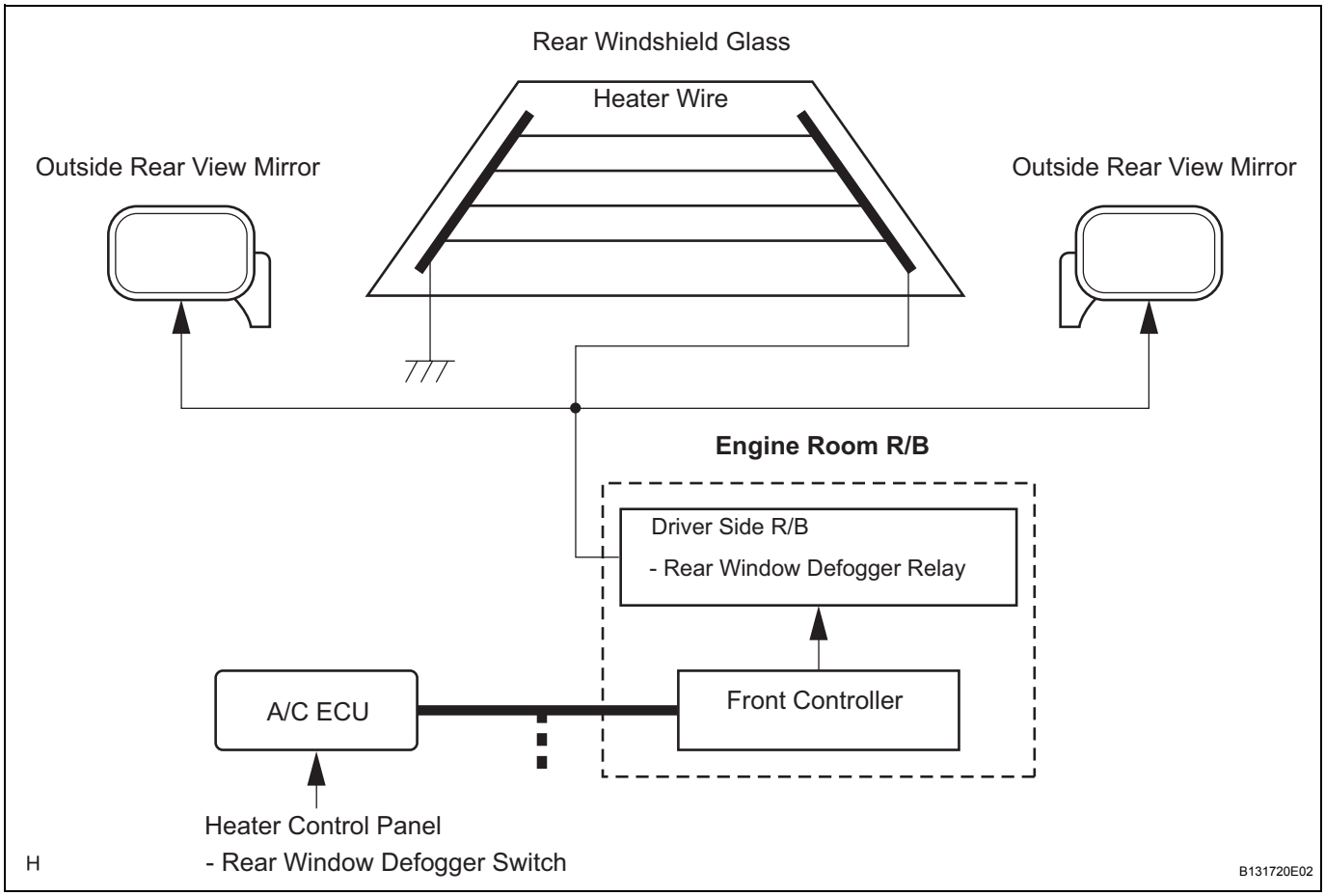

SYSTEM DESCRIPTION

- The defogger system and rear view mirror system use heater wires to defog the rear windshield and rear view mirror, respectively. The defogger switch is installed on the vehicles equipped with the rear window defogger system and rear view mirror system. The defogger switch operates both the defogger system and the rear view heater system. Both systems are part of the same circuit.
- This system is activated when the ignition switch is turned on (IG) and the rear window defogger switch is pushed. This switch is provided with a timer function to keep the defogger and mirror heater on for approximately. 15 minutes.

PROBLEM SYMPTOMS TABLE

If a normal system code is displayed during the DTC check but the problem still occurs, check the circuits for each problem symptom in the order given in the table below and proceed to the relevant troubleshooting page.
HINT:
Inspect the "Fuse" and "Relay" before confirming the suspected areas shown in the table below.
Inspect each suspected area in numerical order, in relation to the corresponding symptom.
If the malfunction still exists after checking and confirming that all the circuits are normal, replace the ECM.

WINDOW DEFOGGER SYSTEM

Symptom	Suspected area	See page
Rear window defogger does not operate (Indicator ON)	1. RR DEF relay	WS-54
	2. Rear window defogger wire	WS-55
	3. A/C ECU, Front controller	-
	4. Wire harness	-
Rear window defogger does not operate (Indicator OFF)	1. RR DEF relay	WS-54
	2. Air conditioning control panel	-
	3. A/C ECU	AC-32
	4. Front controller	-
	5. Rear window defogger wire	WS-55
	6. Wire harness	-
Mirror heater does not operate (Indicator ON)	1. RR DEF relay	WS-54
	2. Outer rear view mirror assembly	MI-37
	3. A/C ECU, Front controller	-
	4. Wire harness	-
Mirror herter does not operate (Indicator OFF)	1. RR DEF relay	WS-54
	2. Air conditioning control panel	-
	3. A/C ECU	AC-32
	4. Front controller	-
	5. Outer rear view mirror	MI-37
	6. Wire harness	-

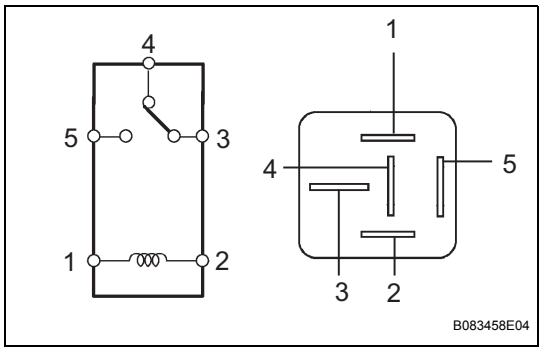

DEFOGGER RELAY

INSPECTION

1. INSPECT RELAY

(a) Remove the RR DEF relay from the engine room R/B.

(b) Measure the resistance according to the value(s) in the table below.

Resistance

Tester connection	Condition	Specified condition
3 - 5	Always	10 kΩ or higher
3 - 5	Voltage is applied between terminals 1 and 2	Below 1 Ω (Battery voltage is applied between terminals 1 and 2)

If the result is not as specified, replace the relay.

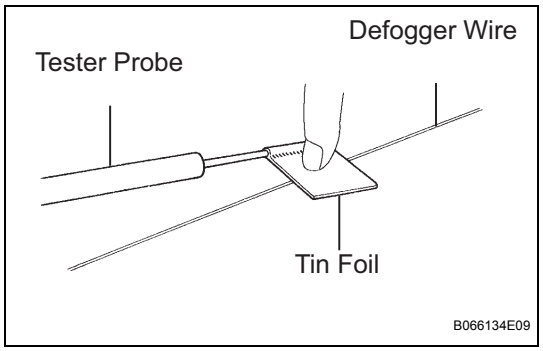

WINDOW DEFOGGER WIRE

ON-VEHICLE INSPECTION

1. INSPECT BACK WINDOW

(a) Prepare a piece of tin foil to wrap the tip of the negative tester probe.

NOTICE:

- **When cleaning the glass, wipe the glass along the wire using a soft and dry cloth. Take care not to damage the wires.**
- **Do not use detergents or glass cleaners that have abrasive ingredients.**
- **When measuring voltage, wrap a piece of tin foil around the tip of the negative tester probe and press the foil against the wire with your finger, as shown in the illustration.**

(b) Turn the ignition switch on (IG).

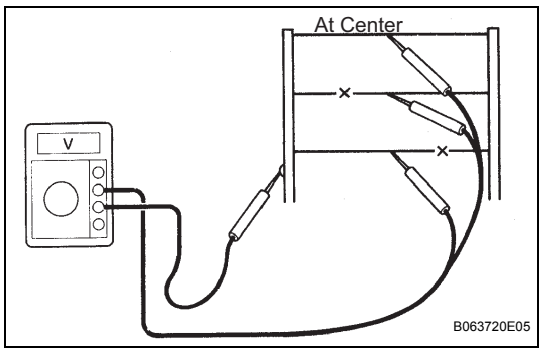

(c) Turn the defogger switch on.

(d) Check the voltage at the center of each defogger wire, as shown in the illustration.

Voltage

Voltage	Criteria
Appox. 5 V	Wire is not broken
Appox. 10 or 0 V	Wire is broken

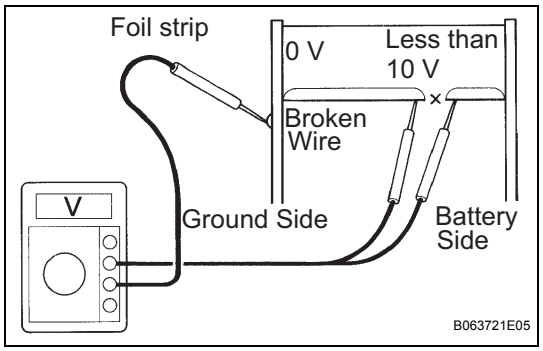

(1) If there is approximately 10 V, the wire may be faulty between the center of the wire and the wire end on the battery side.

(2) If there is no voltage, the wire may be faulty between the center of the wire and the wire end on the ground side.

(e) Place the voltmeter's positive (+) lead against the defogger wire on the battery side.

(f) Place the voltmeter's negative (-) lead with the foil strip against the wire on the ground side.

(g) Slide the positive (+) lead from the battery side to the ground side.

(h) The point where the voltage jumps from approximately 10 V to 0 V is where the defogger wire is broken.

HINT:

If the defogger wire is not broken, the voltmeter should indicate 0 V at the positive (+) end of the defogger wire but gradually increases to approximately 12 V as the meter probe moves to the other end.

REPAIR

1. REPAIR REAR WINDOW DEFOGGER WIRE

HINT:

If necessary, repair the defogger wire.

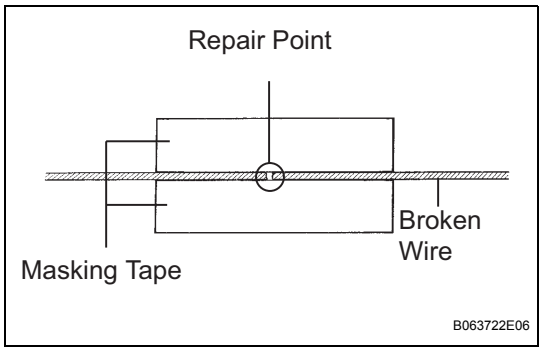

(a) Clean the broken wire tips with grease, wax and silicone remover.

(b) Place 2 pieces of masking tape along both sides of the wire.

(c) Thoroughly mix the repair agent (Dupont paste No. 4817 of equivalent).

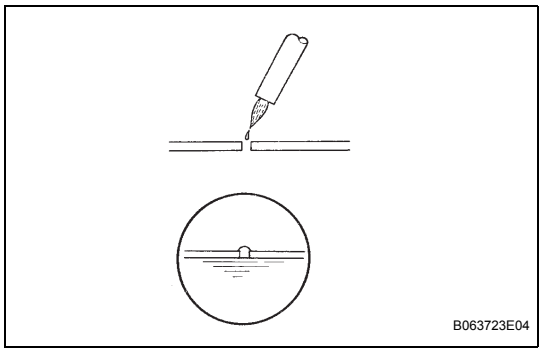

(d) Using a fine tip brush, apply a small amount of the agent to the wire.

(e) After a few minutes, remove the masking tape.

NOTICE:

Do not touch the repaired part on the wire for at least 24 hours, until the repair agent is completely fixed.

WIPER AND WASHER SYSTEM

PRECAUTION

1. GENERAL PRECAUTION

(a) While using the battery during inspection, do not bring the positive and negative tester probes too close to each other as a short circuit may occur.

2. PRECAUTION FOR DISCONNECTING THE BATTERY CABLE

NOTICE:

When disconnecting the battery cable from the negative (-) battery terminal, initialize the following systems after the cable is reconnected.

System Name	See procedure
Power Window Control System	IN-29
Sliding Roof System	IN-29

3. EXPRESSIONS OF IGNITION SWITCH

(a) The type of ignition switch used on this model differs according to the specifications of the vehicle.
The expressions listed in the table below are used in this section.

Switch Type		Ignition Switch (position)	Engine Switch (condition)
Expression	Ignition Switch off	LOCK	Off
	Ignition Switch on (IG)	ON	On (IG)
	Ignition Switch on (ACC)	ACC	On (ACC)
	Engine Start	START	Start

HOW TO PROCEED WITH TROUBLESHOOTING

HINT:
The intelligent tester can be used in steps 5, 6 and 12.

1	VEHICLE BROUGHT TO WORKSHOP

NEXT

2	CUSTOMER PROBLEM ANALYSIS

(a) Confirm problem symptoms.
HINT:
See page IN-36.

NEXT

3	PROBLEM SYMPTOM CONFIRMATION

- SYMPTOM DOES NOT OCCUR (GO TO STEP 4)
- SYMPTOM OCCURS (GO TO STEP 5)

4	SYMPTOM SIMULATION

NEXT

5	CHECK BODY MULTIPLEX COMMUNICATION SYSTEM

(a) Check that the DTC is output.

- MULTIPLEX DTC OUTPUTS (PROCEED TO "BODY MULTIPLEX COMMUNICATION SYSTEM")
- NO MULTIPLEX DTC (GO TO STEP 6)

6	CHECK CAN COMMUNICATION SYSTEM

(a) Check that the DTC is output.

- CAN DTC OUTPUTS (PROCEED TO "CAN COMMUNICATION SYSTEM")
- NO CAN DTC (GO TO STEP7)

7	**PROBLEM SYMPTOMS TABLE**

NEXT

8	**CIRCUIT INSPECTION**

NEXT

9	**TERMINALS OF ECU**

NEXT

10	**IDENTIFICATION OF PROBLEM**

NEXT

11	**REPAIR OR REPLACE**

NEXT

12	**CONFIRMATION TEST**

NEXT

END

PARTS LOCATION

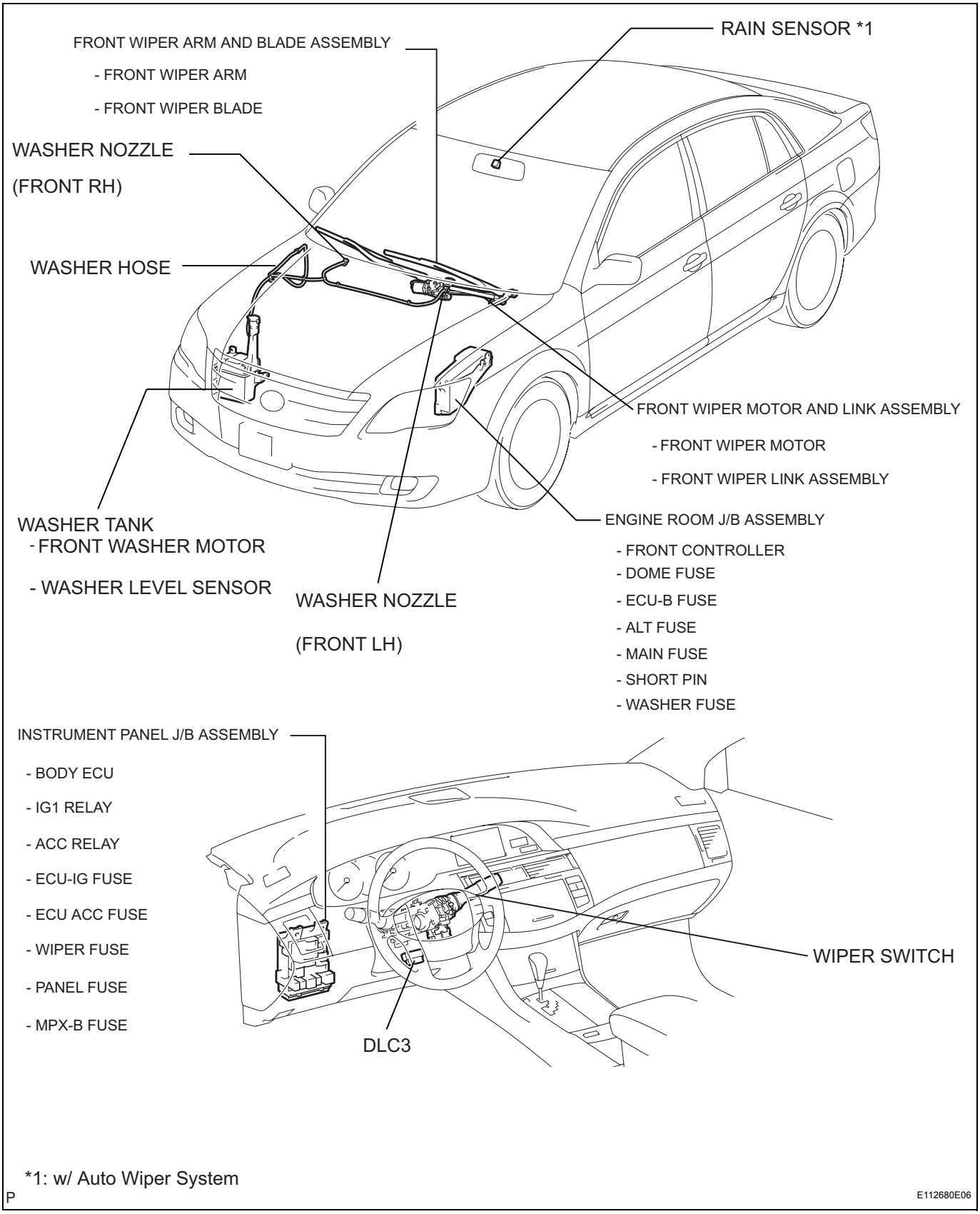

*1: w/ Auto Wiper System

P

E112680E06

SYSTEM DIAGRAM

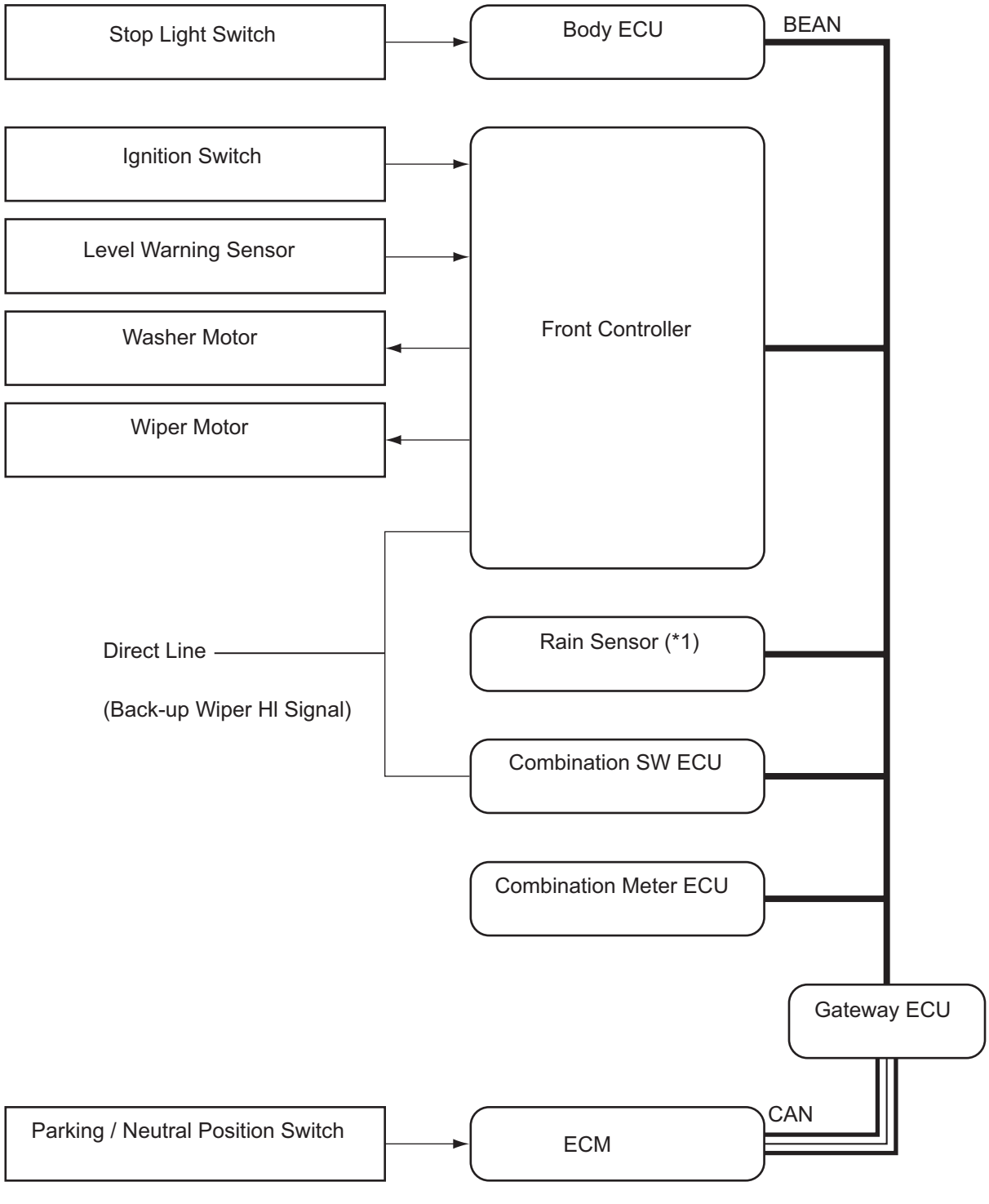

Input and output signal of each ECU

Transmitting ECU (Transmitter)	Receiving ECU	Signals	Communication method
Rain Sensor	Front Controller	• HI continuous operation command signal • LO continuous operation command signal • LO signal operation command signal • Manual intermittent operation command signal	BEAN
Combination Switch ECU	Front Controller	• Wiper SW INT signal • Wiper SW LO signal • Wiper SW HI signal • Wiper SW AUTO position signal • Washer SW signal • Wiper SW MIST signal • Wiper adjusting volume signal	BEAN
Combination Meter ECU	Front Controller	Vehicle speed signal	BEAN
Combination Meter ECU	Rain sensor	Vehicle speed signal	BEAN
Combination Switch ECU	Rain sensor	Wiper & washer SW signal	BEAN
ECM	Front Controller	• Shift position P signal • Shift position N signal	CAN-BEAN
Body ECU	Front Controller	Stop light ON command signal	BEAN
Body ECU	Combination Switch ECU	Ignition SW signal	BEAN
Body ECU	Rain sensor	Display dimmer signal	BEAN
Front Controller	Rain sensor	Wiper motor position signal	BEAN
Front Controller	Combination Meter ECU	Washer level signal	BEAN

HINT:
Wiper operation is controlled, in principle, by the front controller.
The rain sensor, however, controls the auto wiper function.

SYSTEM DESCRIPTION

1. FRONT WIPER SYSTEM

(a) When the front wiper system receives a wiper operation signal from the combination switch ECU, the front controller operates the wiper motor.

(b) While the wipers are operating in intermittent mode from directions from the combination switch, the front controller adjusts the interval between movements of the wiper arm, according to vehicle speed, brake signals, and driving and stopping conditions. The system has the following functions:

Function	Outline
Vehicle speed sensing intermittent wiper function (*1)	This function controls the intermittent interval of the wipers according to the vehicle speed when the wiper switch is in the INT position.
Vehicle speed switching function	This function automatically switches the wipers on or off when the vehicle is stopped or starts moving when the wiper switch is in the LO position.

*1: The vehicle speed sensing intermittent wiper function operates when the fail safe function is operating if there is a malfunction in the auto-wiper function.

2. FRONT WASHER SYSTEM

(a) When the front washer system receives a wiper operation signal from the combination switch ECU, the front controller operates the washer motor.

3. CONTINUOUS FRONT WASHER WIPER SYSTEM

(a) When the continuous front washer system receives a washer operation signal from the combination switch ECU, the front controller operates the wiper motor. The front wiper arms continue operation for 3 times after the front washer is stopped.

(b) The front wipers stop operating 3 times after the front washer switch has been ON for more than 40 seconds continuously. The front wipers then operates once at an interval of 3 to 7 seconds. The interval is determined by the vehicle speed signal received from the combination meter.

4. AUTOMATIC WIPER SYSTEM

(a) In the automatic wiper system, the rain sensor mounted in the upper portion of the windshield sends a front wiper operation command, according to the amount of rainfall, to the front controller. The front wipers operate when the windshield wiper switch is in the AUTO position. The rain sensor sensitivity can be adjusted by the windshield wiper switch's adjusting volume.

(b) In this system, when the front controller receives a vehicle speed signal from the combination meter, and operates the front wipers according to the vehicle speed.

(c) While the wiper motor is operating intermittently from directions from the rain sensor, the front controller adjusts the interval only in auto mode between movements of the wiper arm, according to vehicle speed, brake signals, and driving and stopping conditions.

CUSTOMIZE PARAMETERS

HINT:
The following items can be customized.

NOTICE:

- **After confirming whether the items of the customer's request can be customized or not, perform the customize operation.**
- **Be sure to record the current settings before customizing.**
- **In case of troubleshooting, pay attention as there is a possibility that the function is set to OFF by customizing. (Example: In case of the symptom in which the wireless operation does not function, check that the wireless operation is not set to OFF by customizing, then perform the troubleshooting.)**

WIPER

DISPLAY (ITEM)	DEFAULT	CONTENTS	SETTING
AUTO WIPE (Auto wipe)	AVAIL	Function to operate the wiper automatically when it is raining.	NOT AVAIL / AVAIL
REWIPE CONTROL (Rewipe Control)	SPD MOD	Function to change the time between end of the washer motor operation and start of wiper operation, to prevent streaking from washer fluid.	OFF / 3s / SPD MOD
SPEED MODE (Speed Mode)	AVAIL	Function to change to the intermittent operation mode when the vehicle comes to a stop (0 vehicle speed) from a driving condition where the wiper switch is in the LO position.	NOT AVAIL / AVAIL

PROBLEM SYMPTOMS TABLE

HINT:

- Proceed to troubleshooting of each circuit in the tables below.
- Inspect the fuse and relay before confirming the suspected area as shown in the tables below.
  Inspect each malfunction circuit in numerical order for the corresponding symptom.
  If the malfunction still exists after checking and confirming that all the circuits are normal, replace the ECU.

1. WIPER AND WASHER SYSTEM

Symptom	Suspected area	See page
Wiper and washer system does not operate at all	1. Combination switch ECU power source circuit	WW-13
	2. Wiper and washer switch circuit	WW-24
	3. Front controller	-
Wiper system does not operate (LO, INT)	1. Wiper and washer switch circuit	WW-24
	2. Wiper motor circuit	WW-16
	3. Front controller	-
Wiper system does not operate (HI)	1. Wiper switch (HI speed) circuit	WW-22
	2. Wiper motor circuit	WW-16
	3. Front controller	-
Washer system does not operate	1. Wiper and washer switch circuit	WW-24
	2. Washer motor circuit	WW-29
	3. Front controller	-
Washer fluid level warning system does not operate	1. Washer fluid level warning switch circuit	WW-34
	2. Front controller	-

2. AUTO WIPER SYSTEM

Symptom	Suspected area	See page
Auto wiper system does not operate (manual operation is normal)	1. Rain sensor circuit	WW-25
	2. Rain sensor	-
	3. Front controller	-

TERMINALS OF ECU

1. FRONT CONTROLLER

Engine Room J/B (Front Controller)

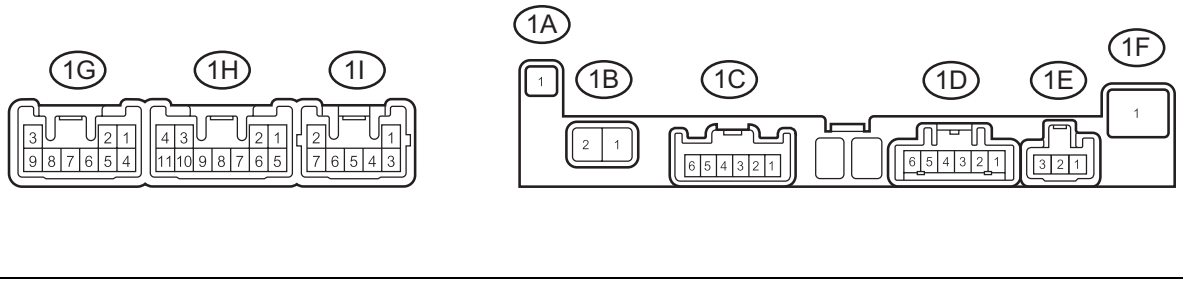

Symbols (Terminal No.)	Wiring Color	Terminal Description	Condition	Specified Condition
1A-1 - 1H-8	B - W-B	Power source circuit	Always	10 to 14 V
1B-1 - 1H-8	Y - W-B	Front washer motor circuit (To washer motor)	Front washer switch OFF	Below 1 V
1B-1 - 1H-8	Y - W-B	Front washer motor circuit (To washer motor)	Front washer switch ON	10 to 14 V
1D-1 - 1H-8	P - W-B	Front wiper motor circuit (HI operation signal)	Wiper switch in HI	10 to 14 V
1D-1 - 1H-8	P - W-B	Front wiper motor circuit (HI operation signal)	Wiper switch in a position except HI	Below 1 V
1D-2 - 1H-8	R - W-B	Front wiper motor circuit (LO operation signal)	Wiper switch in LOW	10 to 14 V
1D-2 - 1H-8	R - W-B	Front wiper motor circuit (LO operation signal)	Wiper switch in a position except LOW	Below 1 V
1E-1 - 1H-8	LG - W-B	Power source circuit	Always	10 to 14 V
1E-3 - 1H-8	B - W-B	Front wiper motor circuit (Operation signal)	Wiper switch OFF	Below 1 V
1E-3 - 1H-8	B - W-B	Front wiper motor circuit (Operation signal)	Wiper switch in HI or LOW	10 to 14 V
1F-1 - 1H-8	B - W-B	Power source circuit	Always	10 to 14 V (*1)
1F-1 - 1H-8	W - W-B	Power source circuit	Always	10 to 14 V (*2)
IG-4 - 1H-8	L - W-B	Wiper switch HI signal	Wiper switch OFF	Below 1 V
IG-4 - 1H-8	L - W-B	Wiper switch HI signal	Wiper switch in HI	10 to 14 V
1G-7 - Body ground	Y - Body ground	Multiplex communication signal circuit	Ignition switch on (IG)	Signal waveform
1G-8 - Body ground	B - Body ground	Multiplex communication signal circuit	Ignition switch on (IG)	Signal waveform
1H-2 - Body ground	W-B - Body ground	Ground	Always	Below 1 V
1H-8 - Body ground	W-B - Body ground	Ground	Always	Below 1 V
1I-2 - 1H-8	LG - W-B	Washer level sensor circuit	Ignition switch on (IG) and washer jar is full	Below 1 V
1I-2 - 1H-8	LG - W-B	Washer level sensor circuit	Ignition switch on (IG) and Washer jar is empty	10 to 14 V

*1: w/: Smart Key System
*2: w/o: Smart Key System

2. COMBINATION SWITCH ECU

Windshield Wiper Switch (Combination Switch ECU):

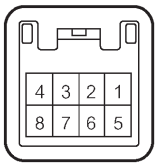

H

E075556E01

Symbols (Terminal No.)	Wiring Color	Terminal Description	Condition	Specified Condition
B (D13-1) - E (D13-5)	W - W-B	Power source circuit	Always	10 to 14 V
IG (D13-2) - E (D13-5)	L - W-B	Ignition switch signal circuit	Ignition switch off	Below 1 V
IG (D13-2) - E (D13-5)	L - W-B	Ignition switch signal circuit	Ignition switch on (IG)	10 to 14 V
2S (D13-3) - E (DB-5)	G - W-B	Wiper switch (HI) signal circuit	Front wiper switch off	Below 1 V
2S (D13-3) - E (DB-5)	G - W-B	Wiper switch (HI) signal circuit	Front wiper switch in HI	10 to 14 V
E (D13-5) - Body ground	W-B - Body ground	Ground circuit	Always	Below 1 V
MPX1 (D13-6) - Body ground	BR - Body ground	Multiplex communication signal circuit	Ignition switch on (IG)	Signal waveform
MPX2 (D13-7) - Body ground	R - Body ground	Multiplex communication signal circuit	Ignition switch on (IG)	Signal waveform (*1)
MPX2 (D13-7) - Body ground	B - Body ground	Multiplex communication signal circuit	Ignition switch on (IG)	Signal waveform (*2)

*1: w/: Smart Key System
*2: w/o: Smart Key System

FAIL-SAFE CHART

1. FRONT WIPER SYSTEM

(a) When the wiper switch is in any position other than "OFF" and the blades have been frozen, a malfunction is detected by the front controller and the wiper operation stops.
HINT:
Recovery condition: Ignition switch off.

(b) When the rain sensor is broken and the wiper switch is in the AUTO position, change the front wiper system to the intermittent mode.
HINT:
Recovery condition: Signal level error cancellation from rain sensor.

(c) When the rain sensor overheats and the front wiper is in the HI operation mode, change the front wiper system to the LO operation mode.
HINT:
Recovery condition: Ignition switch off or wiper operation signal indicates a mode except INT and LO.

(d) When the front controller malfunctions, the front wiper system is in the HI operation mode by combination switch only.
HINT:
Recovery condition: Front controller returns to normal.

DATA LIST / ACTIVE TEST

1. DATA LIST

HINT:

Using the DATA LIST displayed on the intelligent tester, you can read the values of the switches, sensors, actuators, etc. without removing any parts. Reading the DATA LIST as the first step in troubleshooting is one of the methods to shorten labor time.

(a) Connect the intelligent tester to the DLC3.
(b) Turn the ignition switch on (IG).
(c) According to the display on the tester, read the "DATA LIST".

BODY NO.5 (FRONT CONTROLLER):

Item	Measurement Item / Display (Range)	Normal Condition	Diagnostic Note
SPEED MODE	Speed mode / NOT AVL or AVAIL	Customized value can be displayed	-
AUTO WIPER	Auto wiper / NOT AVL or AVAIL	Customized value can be displayed	-
REWIPE CONTROL	Rewipe control / OFF or 3S or SPD	Customized value can be displayed	-
WASHER LVL SW	Washer level switch / ON or OFF	ON: Washer jar is empty OFF: Washer jar is full	-
FRONT WIPER SW	Front wiper switch / ON or OFF	ON: Front wiper switch in a position except OFF OFF: Front wiper switch OFF	-

COMBINATION SWITCH ECU (WINDSHIELD WIPER SWITCH ASSEMBLY):

Item	Measurement Item / Display (Range)	Normal Condition	Diagnostic Note
F WASHER SW	Washer switch / ON or OFF	ON: Washer switch ON OFF: Washer switch OFF	-
F WIPER MIST SW	Front wiper MIST switch / ON or OFF	ON: Front wiper switch in MIST position OFF: Front wiper switch in a position except MIST	-
F WIPER HI SW	Front wiper HI switch / ON or OFF	ON: Front wiper switch in HI position OFF: Front wiper switch in a position except HI	-
F WIPER LO SW	Front wiper LO switch / ON or OFF	ON: Front wiper switch in LO position OFF: Front wiper switch in a position except LO	-
F WIPER INT SW	Front wiper INT switch / ON or OFF	ON: Front wiper switch in INT position OFF: Front wiper switch in a position except INT	-
IG SW SIG	IG switch signal / ON or OFF	ON: Ignition switch on (IG) OFF: Ignition switch off	-
F WIPER VOL POS	Wiper volume position / min=00 - max=90	Customized value can be displayed	-

RAIN SENSOR:

Item	Measurement Item / Display (Range)	Normal Condition	Diagnostic Note
WIPER SW LO SIG	Front wiper switch LO signal / ON or OFF	ON: Front wiper switch in LO position OFF: Front wiper switch in a position except LO	-
WIPER SW HI SIG	Front wiper switch HI signal / ON or OFF	ON: Front wiper switch in HI position OFF: Front wiper switch in a position except HI	-
WIPER SW AUTO SIG	Front wiper switch AUTO signal / ON or OFF	ON: Front wiper switch in HI position OFF: Front wiper switch in a position except HI	-
WASHER SW SIG	Washer switch signal / ON or OFF	ON: Washer switch ON OFF: Washer switch OFF	-
F WIPER HI SW	Front wiper HI switch / ON or OFF	ON: Front wiper switch in HI position OFF: Front wiper switch in a position except HI	-

Item	Measurement Item / Display (Range)	Normal Condition	Diagnostic Note
F WIPER LO SW	Front wiper LO switch / ON or OFF	ON: Front wiper switch in LO position OFF: Front wiper switch in a position except LO	-

2. ACTIVE TEST

HINT:

Performing the ACTIVE TEST using the intelligent tester allows the relays, actuators, etc. to operate without removing any parts. Performing the ACTIVE TEST as the first step of troubleshooting is one of the methods to shorten labor time. The DATA LIST can be displayed during the ACTIVE TEST.

(a) Connect the intelligent tester to the DLC3.

(b) Turn the ignition switch on (IG).

(c) According to the display on the tester, perform the "ACTIVE TEST".

WW

BODY NO.5 (FRONT CONTROLLER):

Item	Test Details	Diagnostic Note
WIPER MOT (HI)	Wiper motor HI operation ON / OFF	-
WIPER MOT (LO)	Wiper motor LO operation ON / OFF	-
WASHER MOTOR	Washer motor operation ON / OFF	-

Combination Switch ECU Power Source Circuit

DESCRIPTION

This circuit provides power to the combination switch.

WIRING DIAGRAM

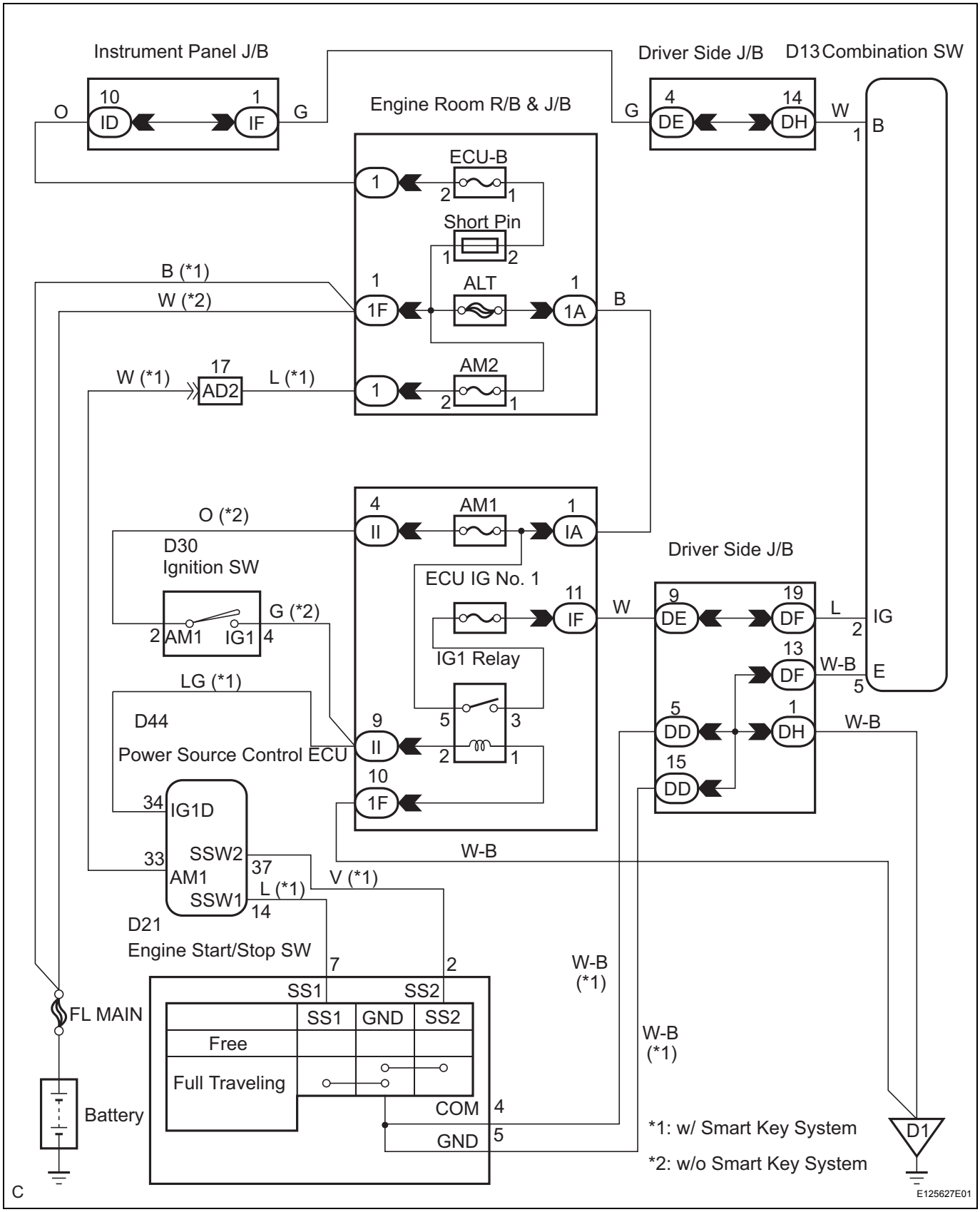

INSPECTION PROCEDURE

HINT:
Before performing this procedure, check that DTCs for the multiplex communication system are not output (See page MP-23).

1 CHECK HARNESS AND CONNECTOR (BATTERY - COMBINATION SWITCH)

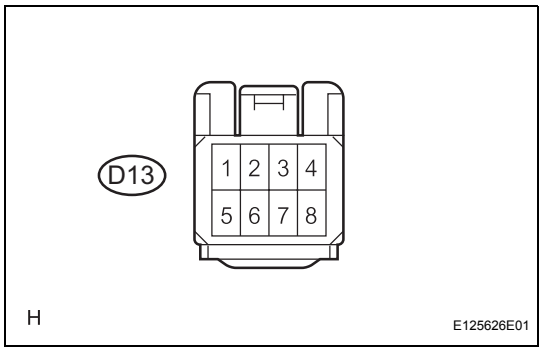

(a) Disconnect the connector from the combination switch ECU.
(b) Measure the voltage according to the value(s) in the table below.
Voltage

Tester connection	Condition	Specified Condition
D13-1 - Body ground	Always	10 to 14 V

NG → **REPAIR OR REPLACE HARNESS OR CONNECTOR**

OK

2 CHECK HARNESS AND CONNECTOR (IGNITION SWITCH CIRCUIT)

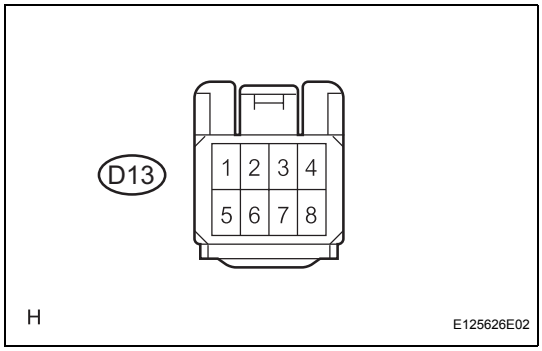

(a) Measure the voltage according to the value(s) in the table below.
Voltage

Tester connection	Condition	Specified Condition
D13-2 - Body ground	Ignition switch on (IG)	10 to 14 V
D13-2 - Body ground	Ignition switch off	Below 1 V

NG → **REPAIR OR REPLACE HARNESS OR CONNECTOR**

OK

3 CHECK HARNESS AND CONNECTOR (COMBINATION SWITCH - BODY GROUND)

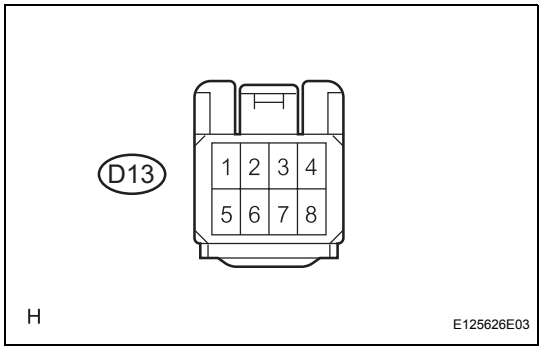

(a) Measure the resistance according to the value(s) in the table below.
Voltage

Tester connection	Condition	Specified Condition
D13-5 - Body ground	Always	Below 1 Ω

NG → **REPAIR OR REPLACE HARNESS OR CONNECTOR**

OK

PROCEED TO NEXT CIRCUIT INSPECTION SHOWN IN PROBLEM SYMPTOMS TABLE

Front Wiper Motor Circuit

DESCRIPTION

The front controller controls the wiper motor. Even if the ECU is malfunctioning, the wiper motor circuit is designed so that the wipers can still function in HI mode.

WIRING DIAGRAM

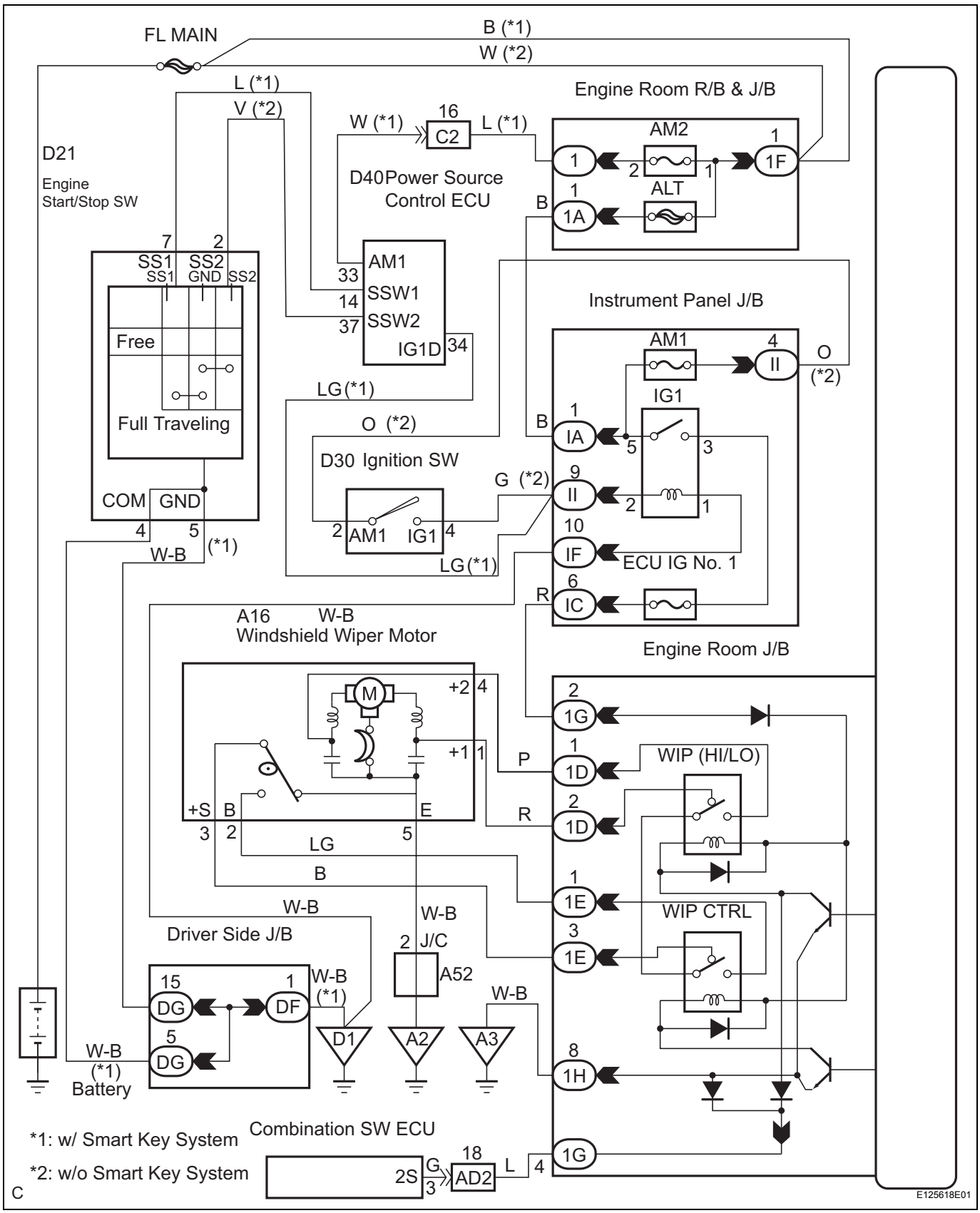

INSPECTION PROCEDURE

1	PERFORM ACTIVE TEST BY INTELLIGENT TESTER

(a) Connect the intelligent tester to the DLC3.
(b) Turn the ignition switch on (IG) and turn the intelligent tester main switch on.
(c) Select the item below in the ACTIVE TEST and then check that the wiper motor operates.

BODY NO.5 (FRONT CONTROLLER):

Item	Test Details	Diagnostic Note
WIPER MOT (HI)	Wiper motor HI operation ON / OFF	-
WIPER MOT (LO)	Wiper motor LO operation ON / OFF	-

OK:
Wiper motor operates in HI or LO mode depending on command.

NG → **Go to step 2**

OK

PROCEED TO NEXT CIRCUIT INSPECTION SHOWN IN PROBLEM SYMPTOMS TABLE

2	INSPECT WINDSHIELD WIPER MOTOR ASSEMBLY

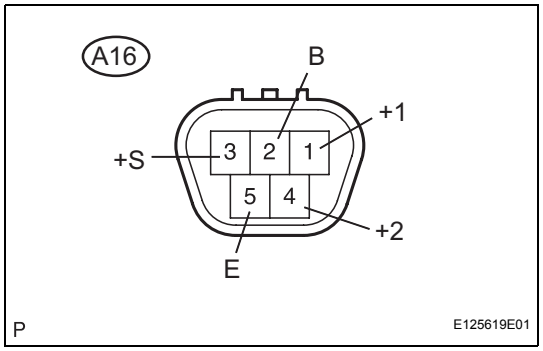

(a) Remove the windshield wiper motor assembly (See page WW-37).
(b) LO operation check.
(1) Connect the positive battery (+) lead to terminal 1 (+1) of the connector, and the negative battery (-) lead to terminal 5 (E).
OK:
Motor is operated at low speed.
(c) HI operation check.
(1) Connect the positive battery (+) lead to terminal 4 (+2) of the connector, and the negative battery (-) lead to terminal 5 (E).
OK:
Motor is operated at high speed.
(d) Automatic stop operation check.
(1) Connect the positive battery (+) lead to terminal 1 (+1) of the connector, and the negative battery (-) lead to terminal 5 (E). With the motor operating at low speed, disconnect terminal 1 (+1) to stop wiper motor operation where in any position other than the automatic stop position.
(2) Using SST, connect terminals 3 (+S) and 1 (+1), and the positive battery (+) lead to terminal 2 (B) to restart motor operation at low speed.

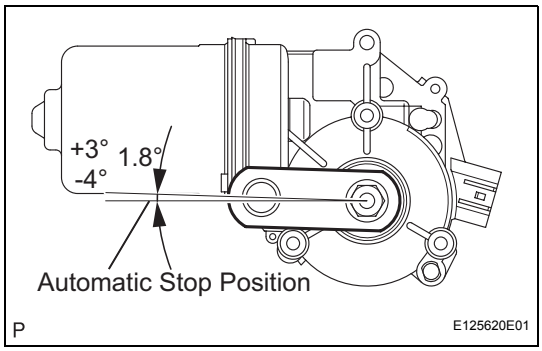

(3) Check that the motor stops at the automatic stop position.
OK:
Motor stops as shown in the illustration.

NG → **REPLACE WINDSHIELD WIPER MOTOR ASSEMBLY**

OK

WW

3	CHECK HARNESS AND CONNECTOR (WINDSHIELD WIPER MOTOR ASSEMBLY - FRONT CONTROLLER)

Wire Harness View:

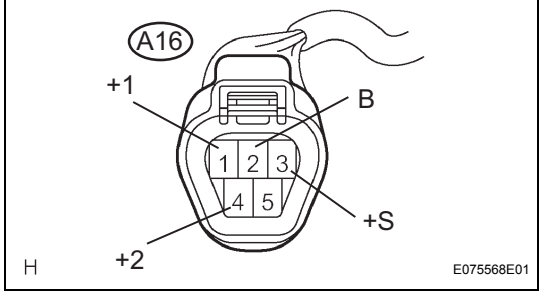

(a) Disconnect the A16 wiper motor connector.
(b) Disconnect the 1D and 1E connectors from the front controller.

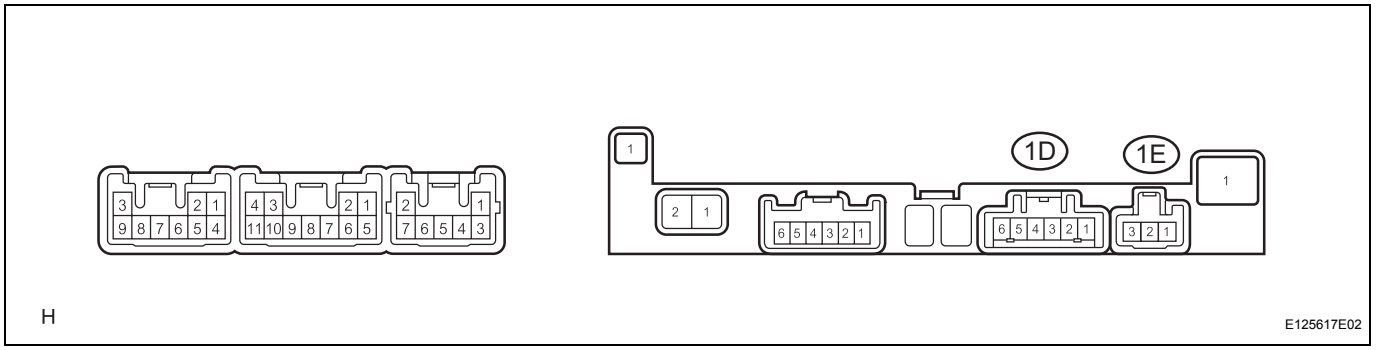

(c) Measure the resistance according to the value(s) in the table below.

Resistance

Tester Connection	Condition	Specified Condition
A16-1 - 1D-2	Always	Below 1 Ω
A16-2 - 1E-1	Always	Below 1 Ω
A16-3 - 1E-3	Always	Below 1 Ω
A16-4 - 1D-1	Always	Below 1 Ω
A16-1 - Body ground	Always	10 kΩ or higher
A16-2 - Body ground	Always	10 kΩ or higher
A16-3 - Body ground	Always	10 kΩ or higher
A16-4 - Body ground	Always	10 kΩ or higher

NG → **REPAIR OR REPLACE HARNESS OR CONNECTOR**

OK

4	CHECK HARNESS AND CONNECTOR (BATTERY - FRONT CONTROLLER)

(a) Measure the voltage according to the value(s) in the table below.

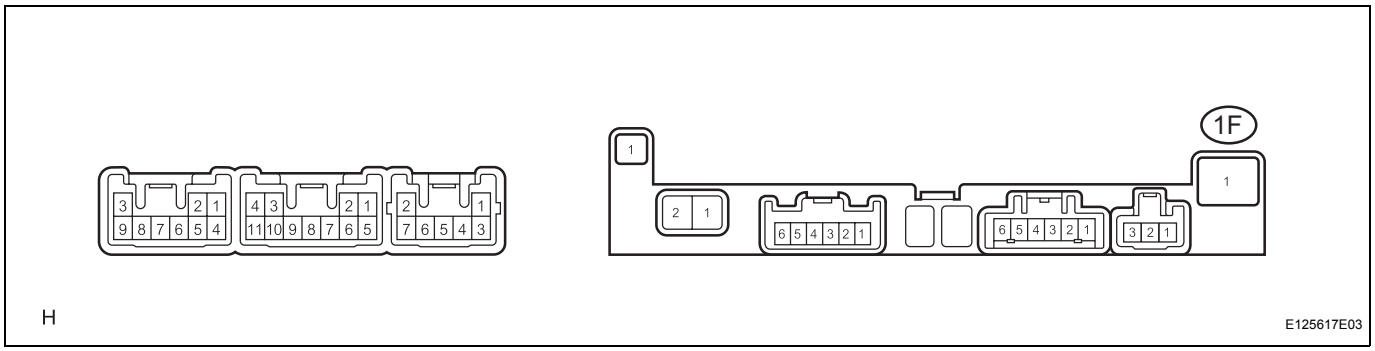

Voltage

Tester Connection	Condition	Specified Condition
1F-1 - Body ground	Always	10 to 14 V

NG → REPAIR OR REPLACE HARNESS OR CONNECTOR

OK

5	CHECK HARNESS AND CONNECTOR (WINDSHIELD WIPER MOTOR ASSEMBLY - BODY GROUND)

Wire Harness View:

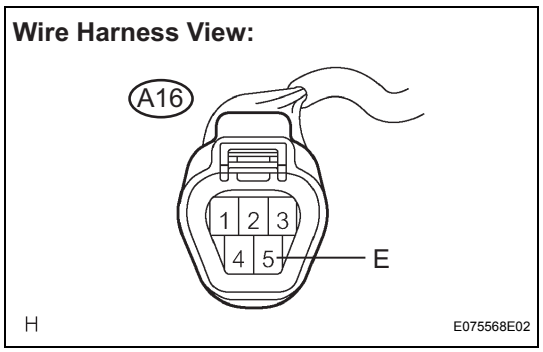

(a) Disconnect the A16 wiper motor connector.
(b) Measure the resistance according to the value(s) in the table below.

Resistance

Tester Connection	Condition	Specified Condition
A16-5 - Body ground	Always	Below 1 Ω

NG → REPAIR OR REPLACE HARNESS OR CONNECTOR

OK

6	CHECK HARNESS AND CONNECTOR (FRONT CONTROLLER - BODY GROUND)

(a) Disconnect the 1H connector from the front controller.

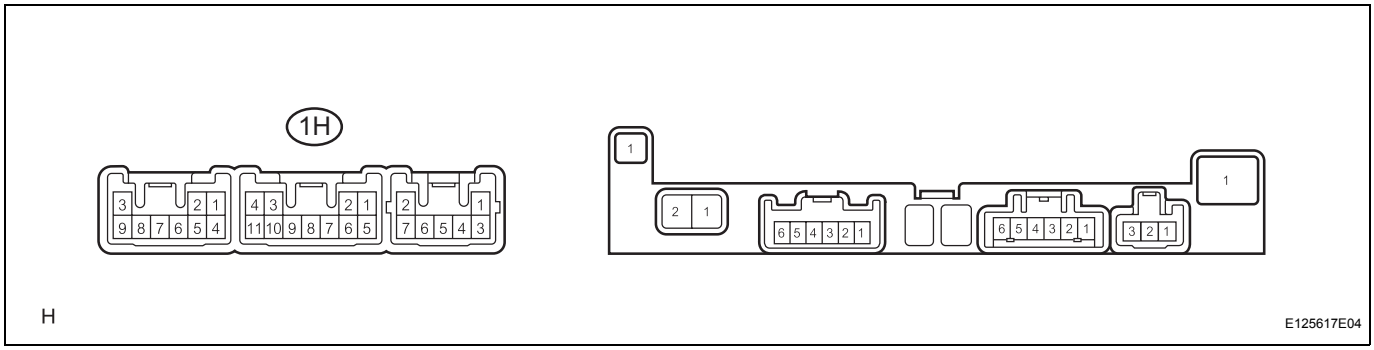

(b) Measure the resistance according to the value(s) in the table below:

Resistance

Tester Connection	Condition	Specified Condition
1H-8 - Body ground	Always	Below 1 Ω

NG → **REPAIR OR REPLACE HARNESS OR CONNECTOR**

OK

7	CHECK HARNESS AND CONNECTOR (IGNITION SWITCH CIRCUIT)

(a) Disconnect the 1G connector from the front controller.

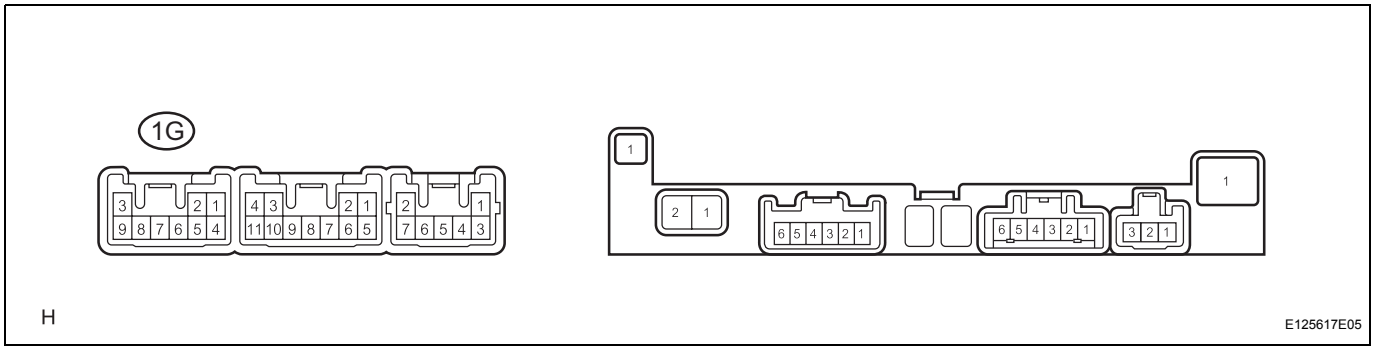

(b) Measure the voltage according to the value(s) in the table below:

Voltage

Tester Connection	Condition	Specified Condition
1G-2 - Body ground	Ignition switch off	Below 1 V
1G-2 - Body ground	Ignition switch on (IG)	10 to 14 V

NG → **REPAIR OR REPLACE HARNESS OR CONNECTOR**

OK

PROCEED TO NEXT CIRCUIT INSPECTION SHOWN IN PROBLEM SYMPTOMS TABLE

Wiper Switch (HI Speed) Circuit

DESCRIPTION

The front controller receives a HI position signal from the wiper switch to operate the wiper motor at high speed.
Even if the ECU malfunctions, its circuit structure enables it to operate the wiper in HI operation mode.

WIRING DIAGRAM

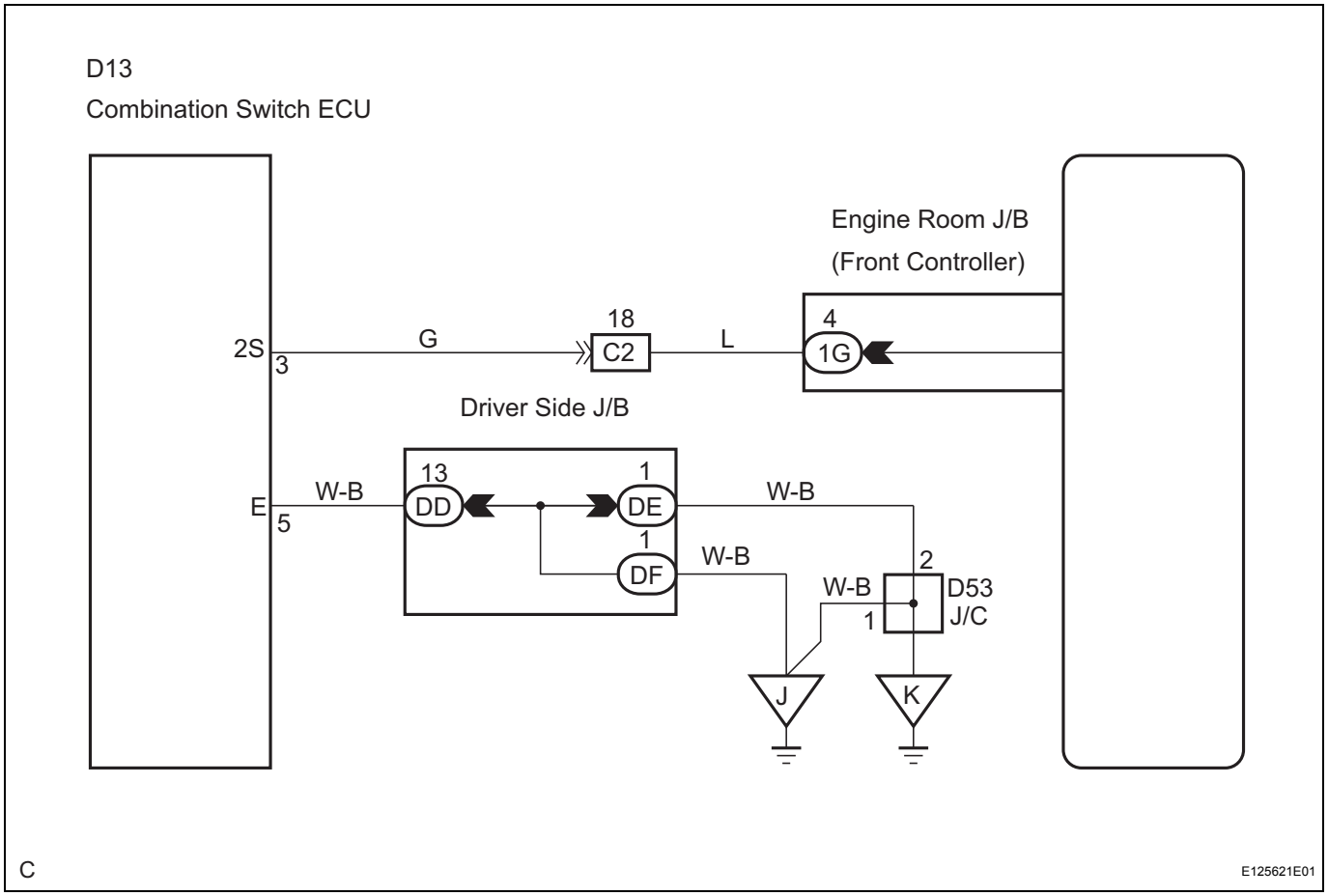

INSPECTION PROCEDURE

1	CHECK HARNESS AND CONNECTOR (COMBINATION SWITCH ECU - FRONT CONTROLLER)

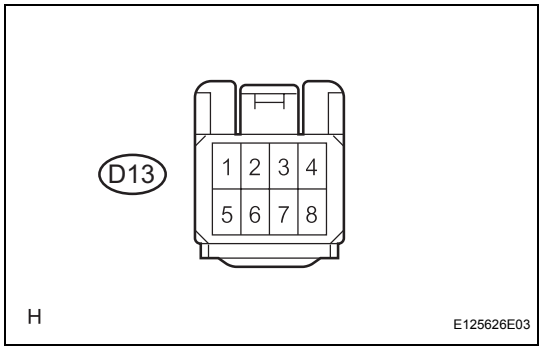

(a) Disconnect the combination switch ECU connector.
(b) Disconnect the 1G connector from the front controller.

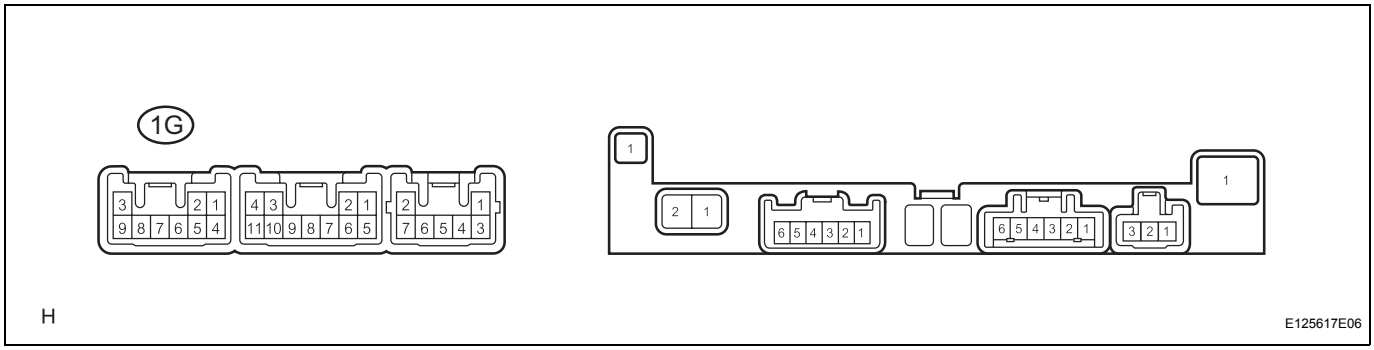

(c) Measure the resistance according to the value(s) in the table below.

Resistance

Tester Connection	Condition	Specified Condition
D13-3 - 1G-4	Always	Below 1 Ω
1G-4 - Body ground	Always	10 kΩ or higher

NG → **REPAIR OR REPLACE HARNESS OR CONNECTOR**

OK

2 CHECK HARNESS AND CONNECTOR (COMBINATION SWITCH ECU - BODY GROUND)

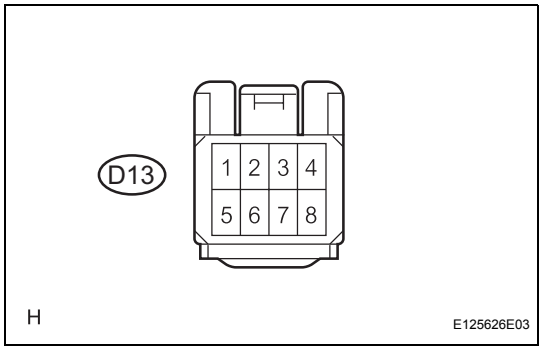

(a) Disconnect the combination switch ECU connector.
(b) Measure the resistance according to the value(s) in the table below.

Resistance

Tester Connection	Condition	Specified Condition
D13-5 - Body ground	Always	Below 1 Ω

NG → **REPAIR OR REPLACE HARNESS OR CONNECTOR**

OK

PROCEED TO NEXT CIRCUIT INSPECTION SHOWN IN PROBLEM SYMPTOMS TABLE

Wiper and Washer Switch Circuit

DESCRIPTION

The signals output by manual operation are sent to the front controller.

INSPECTION PROCEDURE

HINT:
Before performing this procedure, check that DTCs for the multiplex communication system are not output (See page MP-23).

1	READ VALUE OF INTELLIGENT TESTER

(a) Connect the intelligent tester to the DLC3.
(b) Turn the ignition switch on (IG) and turn the intelligent tester main switch on.
(c) Select the items below in the DATA LIST, and read the displays on the intelligent tester.

WW

COMBINATION SWITCH ECU:

Item	Measurement Item / Display (Range)	Normal Condition	Diagnostic Note
F WASHER SW	Front washer switch / ON or OFF	ON: Front washer switch ON OFF: Front washer switch OFF	-
F WIPER MIST SW	Front wiper MIST switch / ON or OFF	ON: Front wiper switch in MIST OFF: Wiper switch in a position except MIST	-
F WIPER HI SW	Front wiper HI switch / ON or OFF	ON: Front wiper switch in HI OFF: Wiper switch in a position except HI	-
F WIPER LO SW	Front wiper LO switch / ON or OFF	ON: Front wiper switch in LO OFF: Wiper switch in a position except LO	-
F WIPER INT SW	Front wiper INT switch / ON or OFF	ON: Front wiper switch in INT OFF: Wiper switch in a position except INT	-
IG SW SIG	IG switch signal / ON or OFF	ON: Ignition switch on (IG) OFF: Ignition switch off	-
F WIPER VOL POS	Wiper volume position / 10s or 15s or 20s	Condition value can be displayed	-

OK:
The normal conditions listed above are displayed.

NG → **REPLACE WINDSHIELD WIPER SWITCH ASSEMBLY**

OK

PROCEED TO NEXT CIRCUIT INSPECTION SHOWN IN PROBLEM SYMPTOMS TABLE

Rain Sensor Circuit

DESCRIPTION

This circuit provides power to operate the rain sensor.
The auto wiper system operates when the wiper switch is in the AUTO position.
The rain sensor is connected to each ECU at the multiplex communication circuit.
When it detects raindrops in the detection area of the windshield glass, the rain sensor sends a wiper control signal to the front controller according to the amount of raindrops detected.
It also sends signals to the adaptive laser radar cruise control system, the mirror defogger system and others.

WIRING DIAGRAM

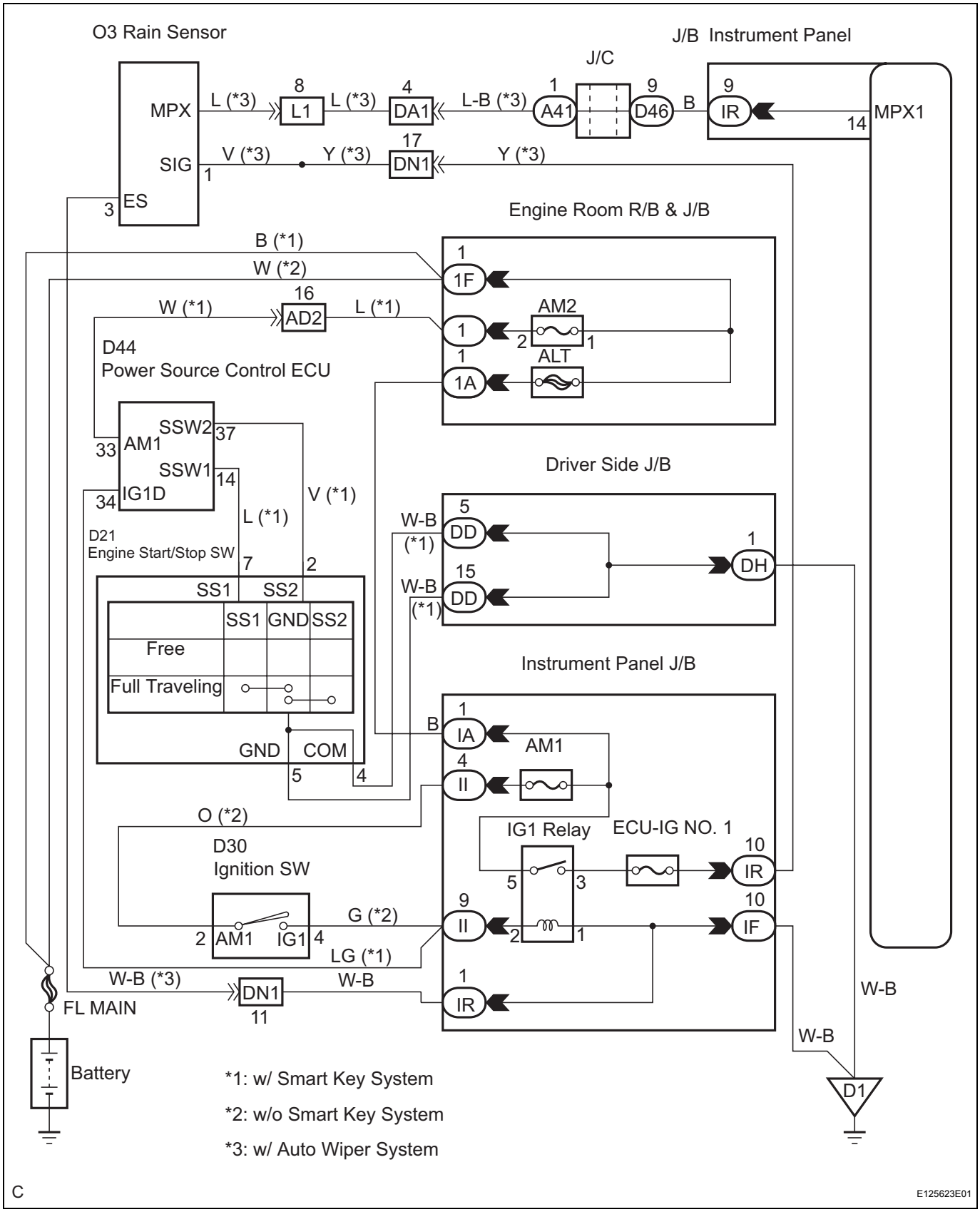

INSPECTION PROCEDURE

HINT:
Before performing this procedure, check that DTCs for the multiplex communication system are output (See page MP-23).

1	READ VALUE OF INTELLIGENT TESTER

(a) Connect the intelligent tester to the DLC3.
(b) Turn the ignition switch on (IG) and turn the intelligent tester main switch on.
(c) Select the items below in the DATA LIST, and read the displays on the intelligent tester.

RAIN SENSOR:

Item	Measurement Item / Display (Range)	Normal Condition	Diagnostic Note
WIPER SW LO SIG	Front wiper switch LO signal / ON or OFF	ON: Front wiper switch in LO position OFF: Front wiper switch in a position except LO	-
WIPER SW HI SIG	Front wiper switch HI signal / ON or OFF	ON: Front wiper switch in HI position OFF: Front wiper switch in a position except HI	-
WIPER SW AUTO SIG	Front wiper switch AUTO signal / ON or OFF	ON: Front wiper switch in HI position OFF: Front wiper switch in a position except HI	-
WASHER SW SIG	Washer switch signal / ON or OFF	ON: Washer switch ON OFF: Washer switch OFF	-
F WIPER HI SW	Front wiper HI switch / ON or OFF	ON: Front wiper switch in HI position OFF: Front wiper switch in a position except HI	-
F WIPER LO SW	Front wiper LO switch / ON or OFF	ON: Front wiper switch in LO position OFF: Front wiper switch in a position except LO	-

OK:
The normal conditions listed above are displayed.

NG → **Go to step 2**

OK

PROCEED TO NEXT CIRCUIT INSPECTION SHOWN IN PROBLEM SYMPTOMS TABLE

2	CHECK HARNESS AND CONNECTOR (RAIN SENSOR - BODY GROUND)

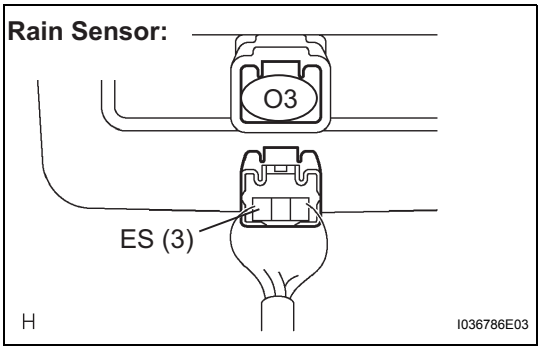

(a) Disconnect the connector from the rain sensor.
(b) Measure the resistance according to the value(s) in the table below.
Resistance

Tester Connection	Condition	Specified Condition
O3-3 - Body ground	Always	Below 1 Ω

NG → **REPAIR OR REPLACE HARNESS OR CONNECTOR**

OK

3	CHECK HARNESS AND CONNECTOR (IGNITION SWITCH CIRCUIT)

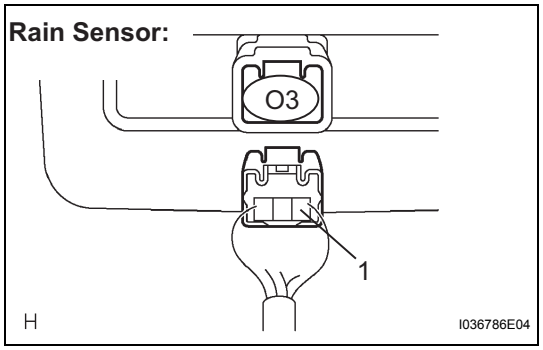

(a) Disconnect the connector from the rain sensor.
(b) Measure the voltage according to the value(s) in the table below.

Voltage

Tester Connection	Condition	Specified Condition
O3-1 - Body ground	Ignition switch off	Below 1 V
O3-1 - Body ground	Ignition switch on (IG)	10 to 14 V

NG → **REPAIR OR REPLACE HARNESS OR CONNECTOR**

OK

PROCEED TO NEXT CIRCUIT INSPECTION SHOWN IN PROBLEM SYMPTOMS TABLE

WW

Washer Motor Circuit

DESCRIPTION

The front controller receives washer switch information from the windshield wiper switch, and operates the washer relay.

WIRING DIAGRAM

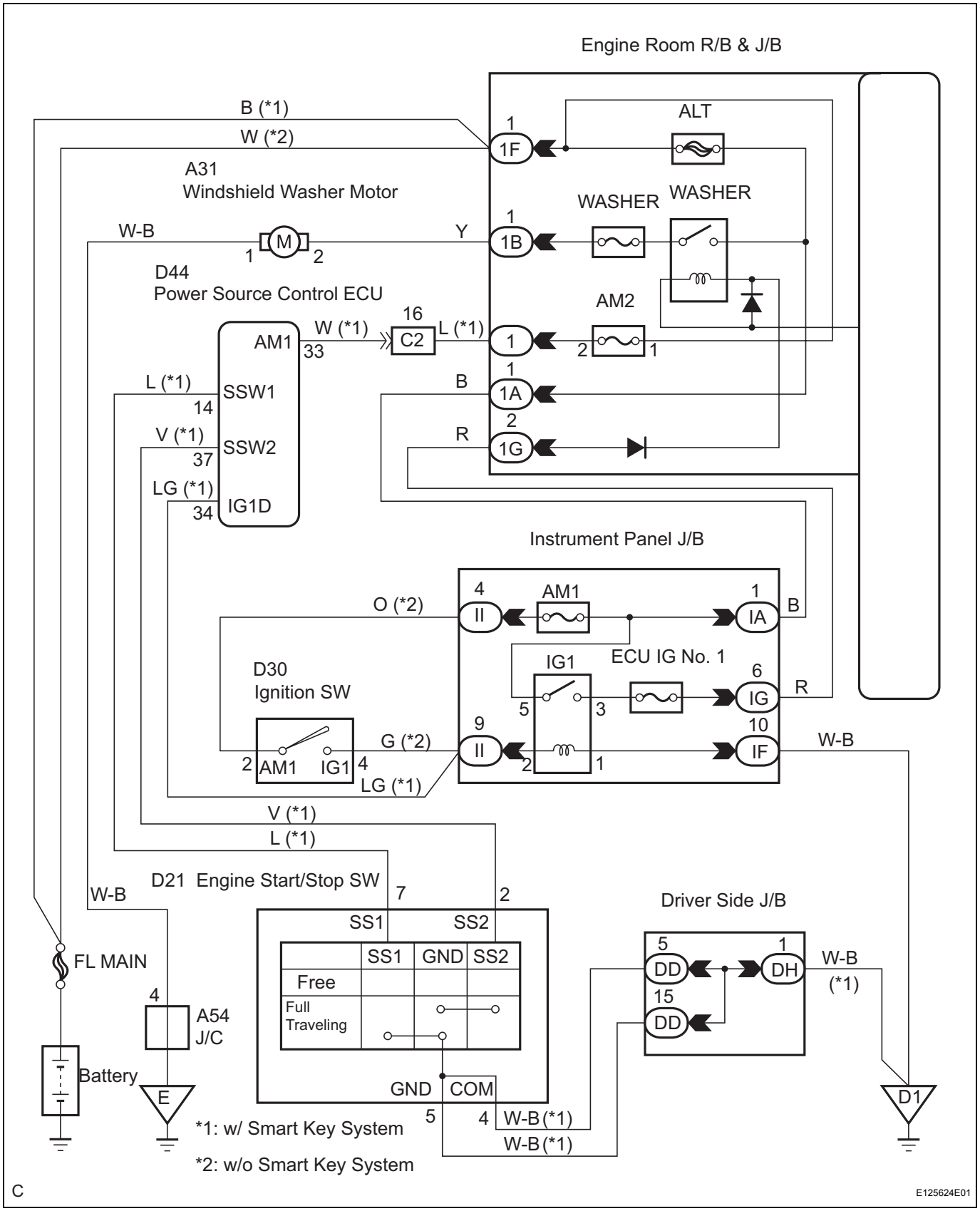

INSPECTION PROCEDURE

1	PERFORM ACTIVE TEST BY INTELLIGENT TESTER

(a) Connect the intelligent tester to the DLC3.
(b) Turn the ignition switch on (IG) and turn the intelligent tester main switch on.
(c) Select the item below in the ACTIVE TEST and then check that the washer motor operates.

BODY NO.5 (FRONT CONTROLLER):

Item	Test Details	Diagnostic Note
WASHER MOTOR	Washer motor operation OFF / ON	-

OK:
Washer motor operates.

NG → **Go to step 2**

OK

PROCEED TO NEXT CIRCUIT INSPECTION SHOWN IN PROBLEM SYMPTOMS TABLE

2	INSPECT ENGINE ROOM JUNCTION BLOCK ASSEMBLY (FRONT CONTROLLER)

(a) Measure the voltage according to the value(s) in the table below.

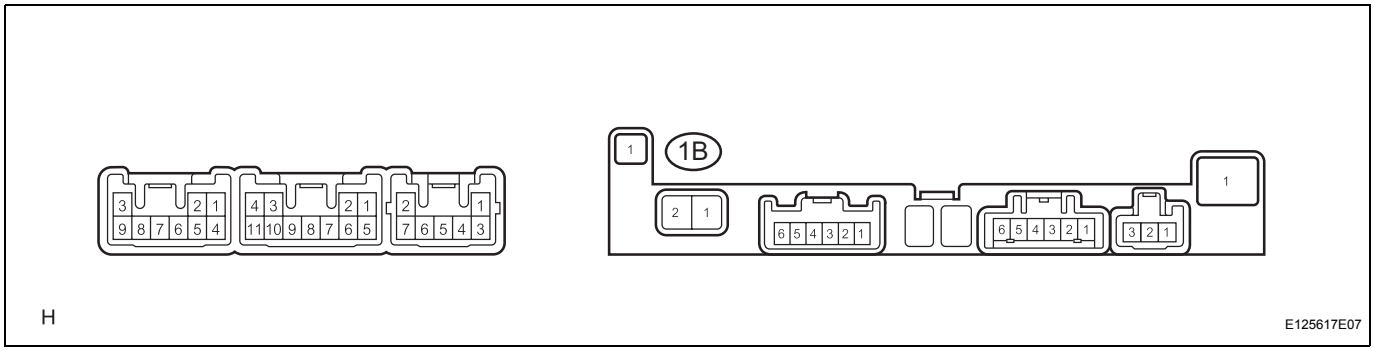

Voltage

Tester Connection	Condition	Specified Condition
1B-1 - Body ground	Washer switch OFF	Below 1 V
1B-1 - Body ground	Ignition switch on (IG) and washer switch on	10 to 14 V

NG → **Go to step 4**

OK

3	INSPECT WINDSHIELD WASHER MOTOR AND PUMP ASSEMBLY

(a) Disconnect the washer motor connector.

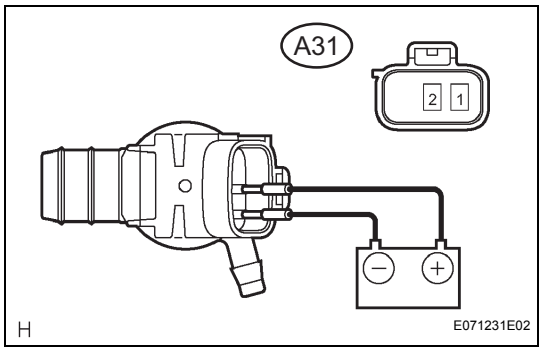

(b) Connect the positive battery (+) lead to terminal 1 of the washer motor, and the negative battery (-) lead to terminal 2.

OK:

Washer motor operates.

NG → **REPLACE WINDSHIELD WASHER MOTOR AND PUMP ASSEMBLY**

OK

REPAIR OR REPLACE HARNESS OR CONNECTOR (WASHER MOTOR CIRCUIT)

WW

4	CHECK HARNESS AND CONNECTOR (BATTERY - FRONT CONTROLLER)

(a) Measure the voltage according to the value(s) in the table below.

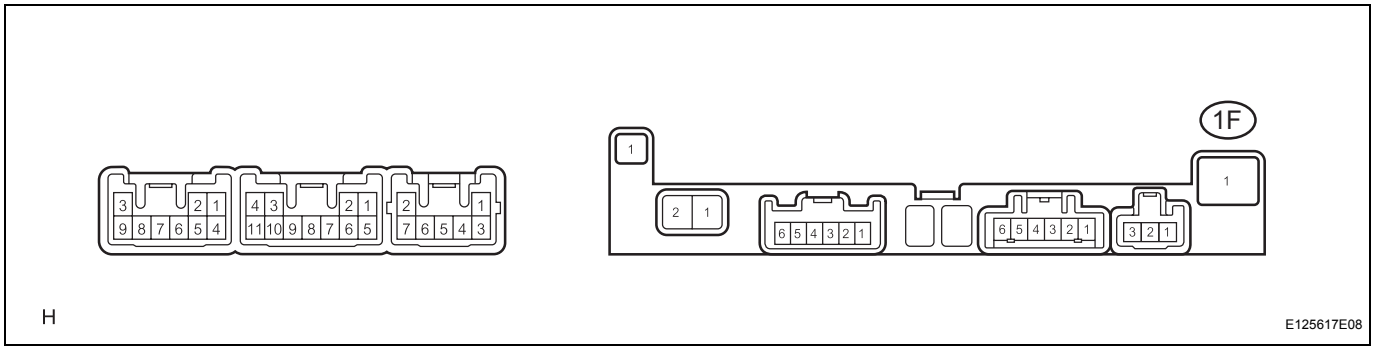

Voltage

Tester Connection	Condition	Specified Condition
1F-1 - Body ground	Always	10 to 14 V

NG → **REPAIR OR REPLACE HARNESS OR CONNECTOR**

OK

5	CHECK HARNESS AND CONNECTOR (IGNITION SWITCH CIRCUIT)

(a) Disconnect the 1G connector from the front controller.

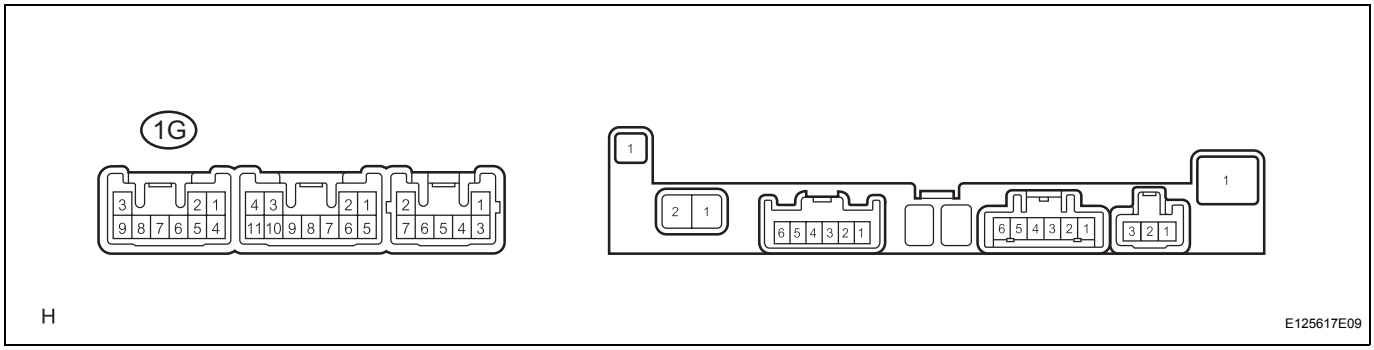

(b) Measure the voltage according to the value(s) in the table below:

Voltage

Tester Connection	Condition	Specified Condition
1G-2 - Body ground	Ignition switch off	Below 1 V
1G-2 - Body ground	Ignition switch on (IG)	10 to 14 V

NG → **REPAIR OR REPLACE HARNESS OR CONNECTOR**

OK

PROCEED TO NEXT CIRCUIT INSPECTION SHOWN IN PROBLEM SYMPTOMS TABLE

Washer Fluid Level Warning Switch Circuit

DESCRIPTION

The front controller receives washer fluid level sensor information, and sends it through the multiplex communication system to the combination meter. The combination meter receives this information and illuminates the washer fluid level warning light when the washer fluid falls below a predetermined level or is empty.

WIRING DIAGRAM

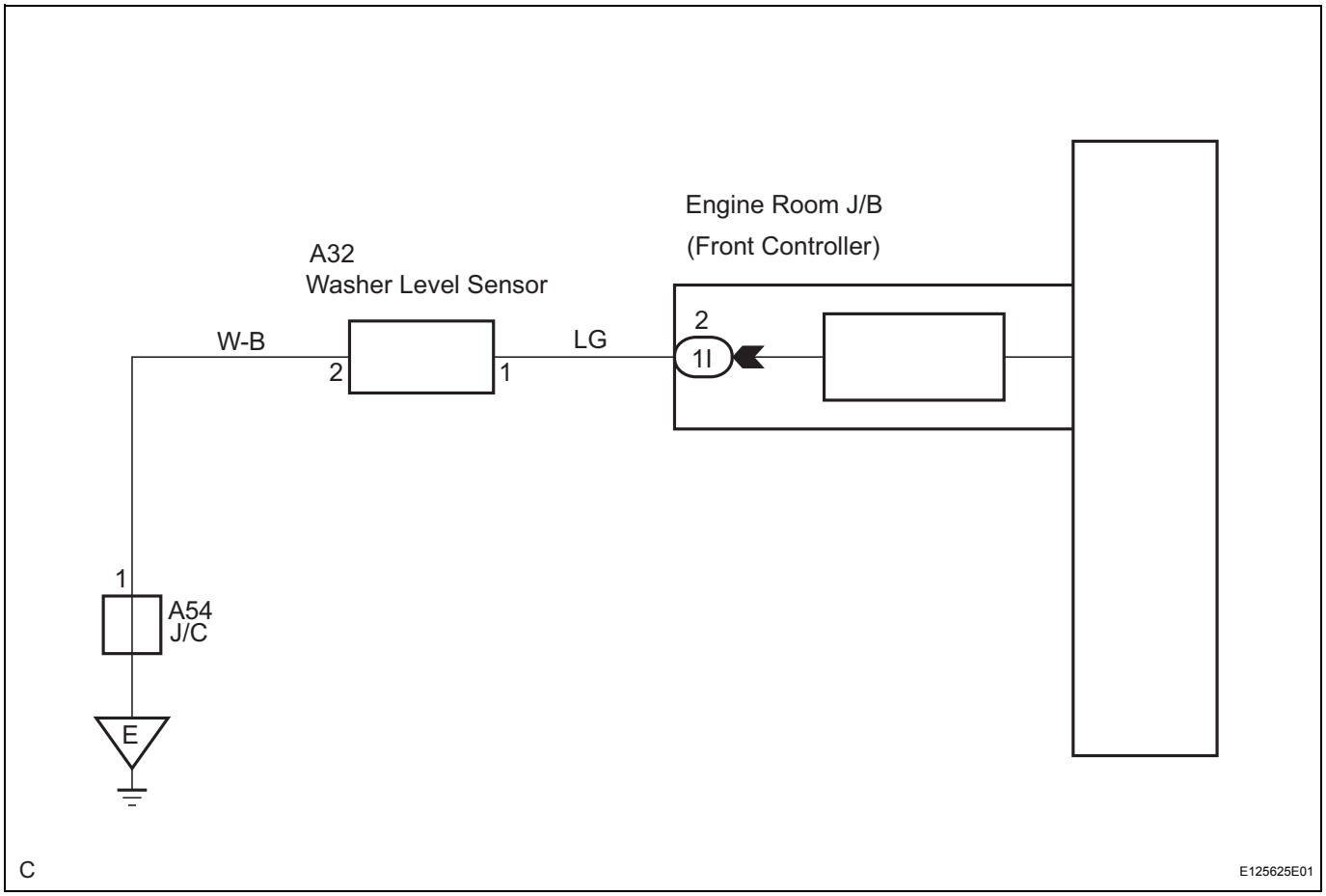

INSPECTION PROCEDURE

1	READ VALUE OF INTELLIGENT TESTER

(a) Connect the intelligent tester to the DLC3.
(b) Turn the ignition switch on (IG) and turn the intelligent tester main switch on.
(c) Select the item below in the DATA LIST, and read the displays on the intelligent tester.

Item	Measurement Item / Display (Range)	Normal Condition	Diagnostic Note
WASHER LVL SW	Washer level switch / ON or OFF	ON: Washer jar is empty OFF: Washer jar is full	-

OK:

The normal conditions listed above are displayed.

NG → Go to step 2

OK

PROCEED TO NEXT CIRCUIT INSPECTION SHOWN IN PROBLEM SYMPTOMS TABLE

2 INSPECT LEVEL WARNING SWITCH ASSEMBLY

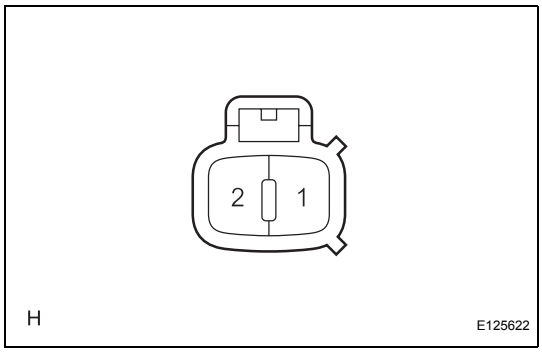

(a) Measure the resistance according to the value(s) in the table below.

Resistance

Tester Connection	Condition	Specified Condition
1 - 2	Washer jar is full	Below 1 Ω
1 - 2	washer jar is empty	10 kΩ or higher

NG → **REPLACE LEVEL WARNING SWITCH ASSEMBLY**

OK

3 CHECK HARNESS AND CONNECTOR (WASHER LEVEL SENSOR CIRCUIT)

(a) Disconnect the 1I connector from the front controller.

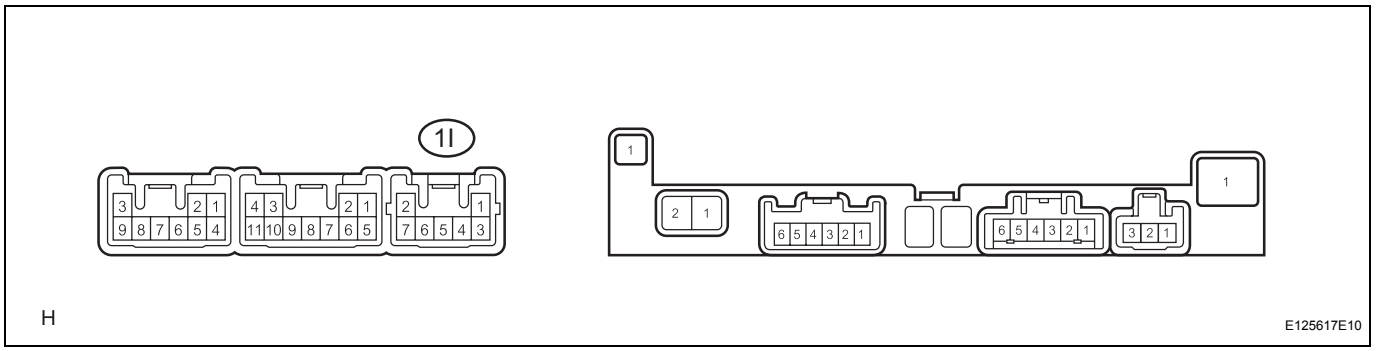

(b) Measure the resistance according to the value(s) in the table below.

Resistance

Tester Connection	Condition	Specified Condition
1I-2 - Body ground	Washer jar is full	Below 1 Ω
1I-2 - Body ground	Washer jar is empty	10 kΩ or higher

NG → **REPAIR OR REPLACE HARNESS OR CONNECTOR**

OK

PROCEED TO NEXT CIRCUIT INSPECTION SHOWN IN PROBLEM SYMPTOMS TABLE

FRONT WIPER MOTOR

COMPONENTS

WW

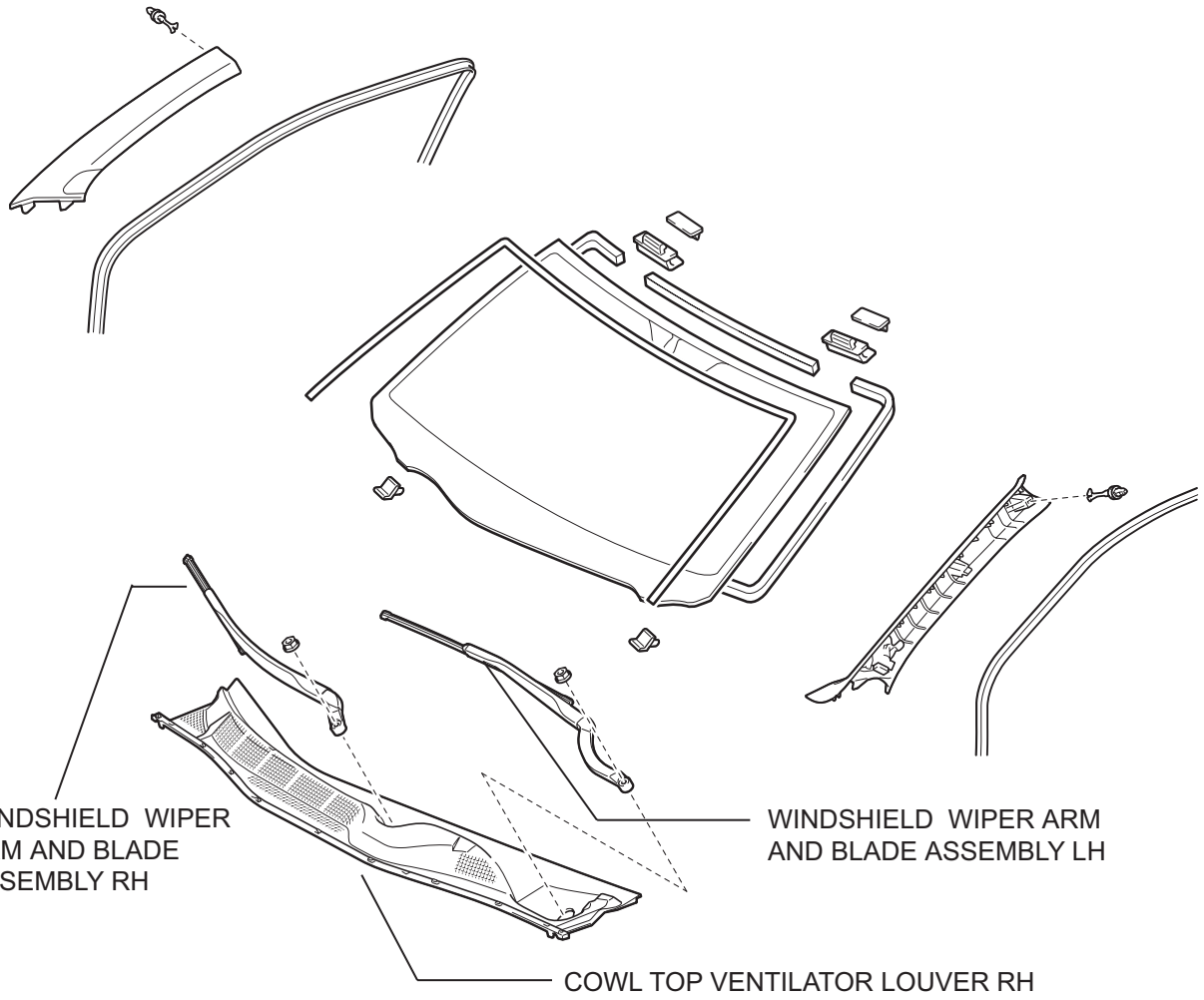

P

B115002E01

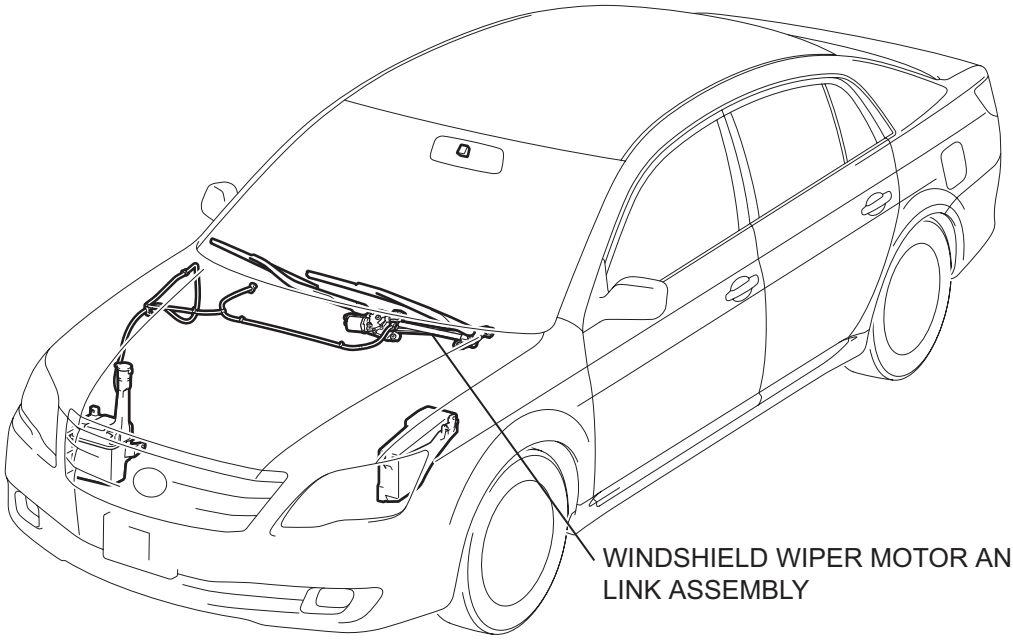

WINDSHIELD WIPER MOTOR AND LINK ASSEMBLY

- WINDSHIELD WIPER MOTOR ASSEMBLY
- WINDSHIELD WIPER LINK ASSEMBLY

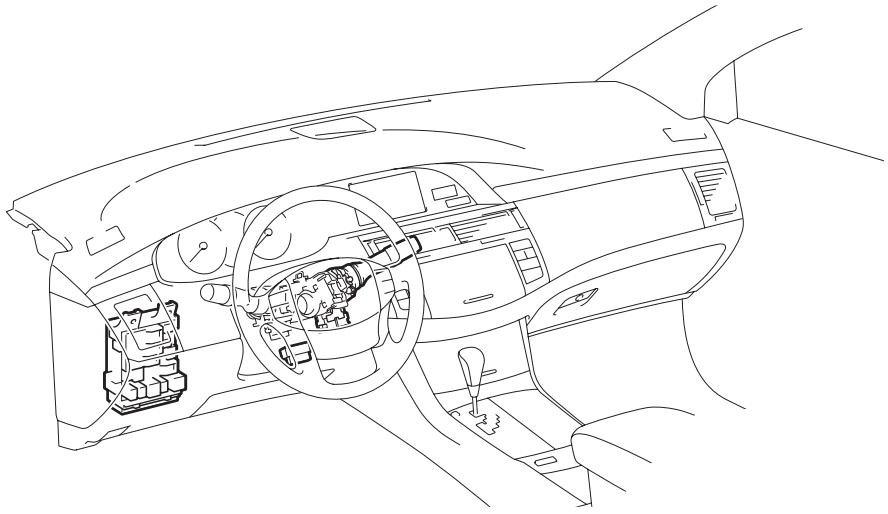

P

E112680E07

REMOVAL

HINT:
Installation is in the reverse order of removal.

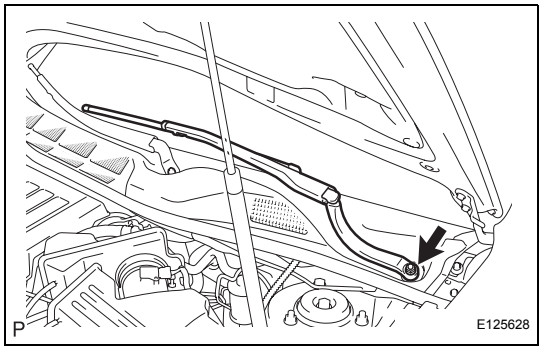

1. REMOVE WINDSHIELD WIPER ARM AND BLADE ASSEMBLY LH

(a) Remove the nut and FR wiper arm & blade assembly LH.

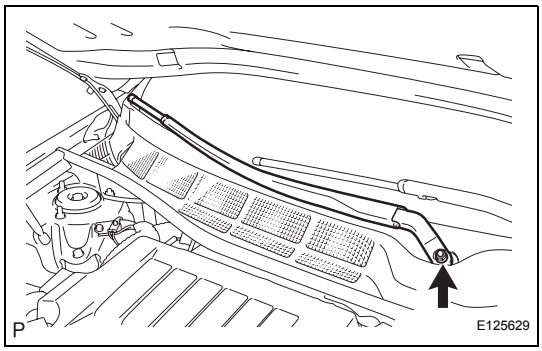

2. REMOVE WINDSHIELD WIPER ARM AND BLADE ASSEMBLY RH

(a) Remove the nut and FR wiper arm & blade assembly RH.

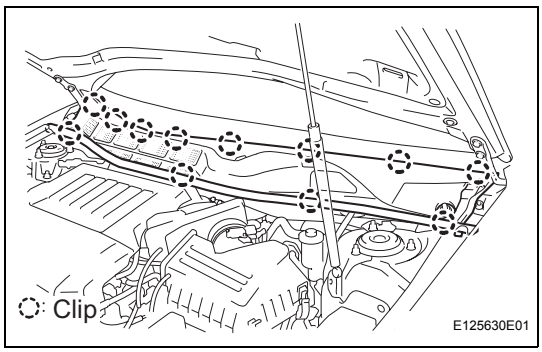

3. REMOVE COWL TOP VENTILATOR LOUVER SUB-ASSEMBLY

(a) Disengage the 12 clips, and remove the cowl top ventilator louver RH.

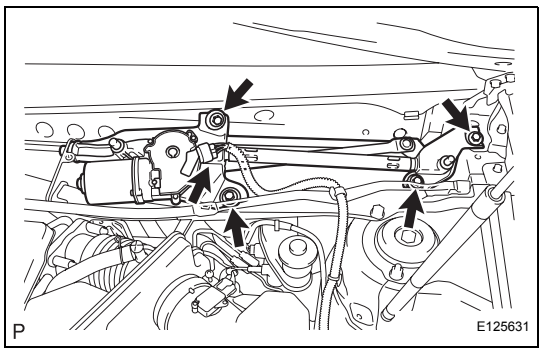

4. REMOVE WINDSHIELD WIPER MOTOR AND LINK ASSEMBLY

(a) Disconnect the connector.
(b) Remove the 4 bolts and windshield wiper motor & link assembly.

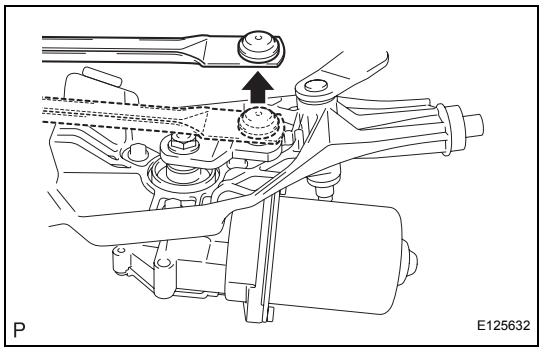

5. REMOVE WINDSHIELD WIPER LINK ASSEMBLY

(a) Using a screwdriver wrapped with protective tape, separate the rod of the wiper link assembly from the windshield wiper motor assembly as shown in the illustration.

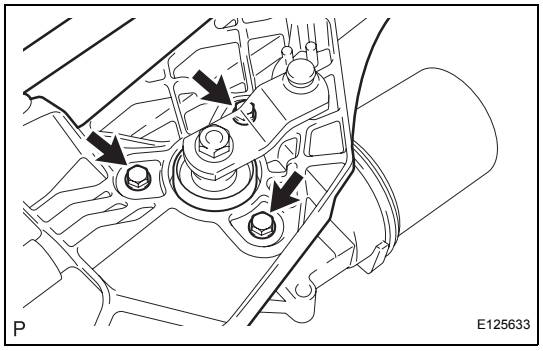

(b) Remove the 3 bolts and wiper link assembly.

INSPECTION

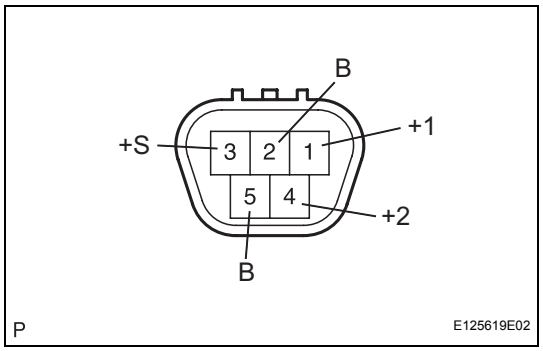

1. WINDSHIELD WIPER MOTOR ASSEMBLY

(a) LO Operation Check

(1) Connect the positive battery (+) lead to terminal 1 (+1) of the connector, and the negative battery (-) lead to terminal 5 (E), and check that the motor operates at low speed (LO).

(b) HI Operation Check

(1) Connect the positive battery (+) lead to terminal 4 (+2) of the connector, and the negative battery (-) lead to terminal 5 (E), and check that the motor operates at high speed (HI).

(c) Automatic Stop Operation Check

(1) Connect the positive battery (+) lead to terminal 1 (+1) of the connector, and the negative battery (-) lead to terminal 5 (E). With the motor operating at low speed (LO), disconnect terminal 1 (+1) to stop wiper motor operation at any position other than the automatic stop position.

(2) Using SST, connect terminals 3 (+S) and 1 (+1), and the positive battery (+) lead to terminal 3 (B) to restart motor operation at low speed.

SST 09843-18040

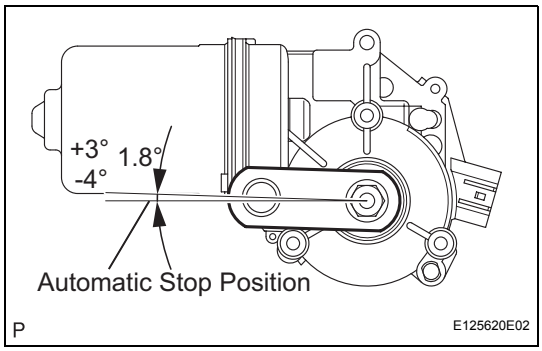

(3) Check the automatic stop position as shown in the illustration.

INSTALLATION

1. INSTALL WINDSHIELD WIPER LINK ASSEMBLY

(a) Install the windshield wiper motor assembly with the 3 bolts.
Torque: 7.5 N*m (76 kgf*cm, 66 in.*lbf)

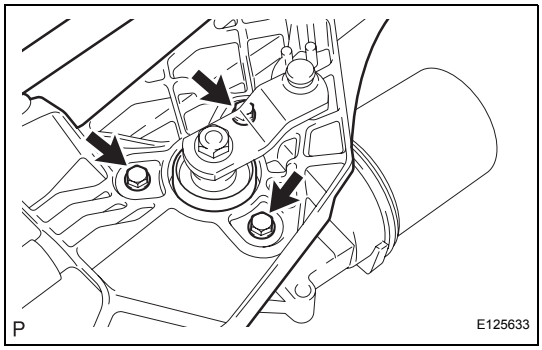

(b) Install the rod to the wiper link assembly.

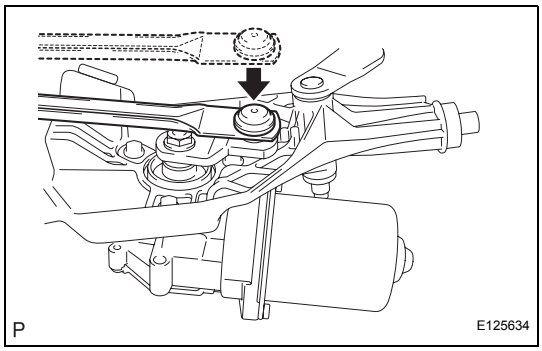

2. INSTALL WINDSHIELD WIPER MOTOR AND LINK ASSEMBLY

(a) Install the windshield wiper motor & link assembly with the 4 bolts.
Torque: 7.0 N*m (71 kgf*cm, 62 in.*lbf)

(b) Connect the connector.

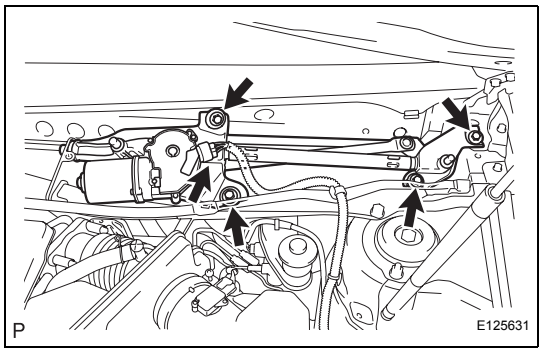

3. INSTALL WINDSHIELD WIPER ARM AND BLADE ASSEMBLY RH

(a) Operate the wiper, and stop the windshield wiper motor assembly at the automatic stop position.

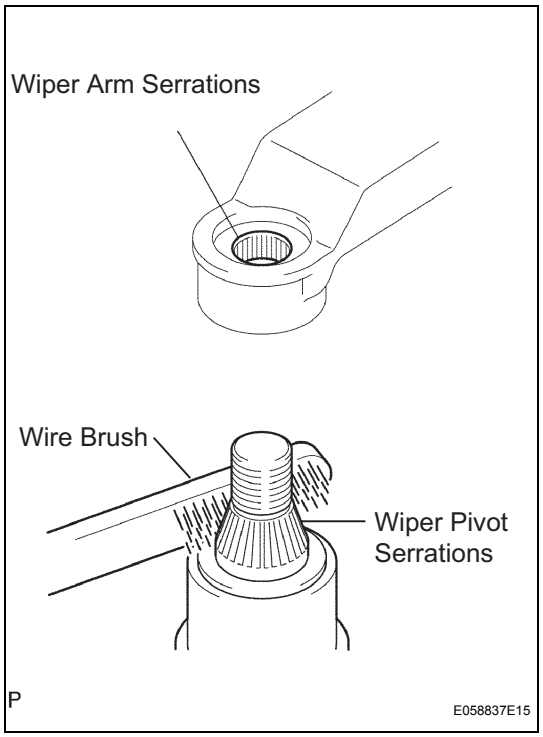

(b) Clean the wiper arm serrations.
(c) Clean the wiper pivot serrations with a wire brush (before reinstalling).

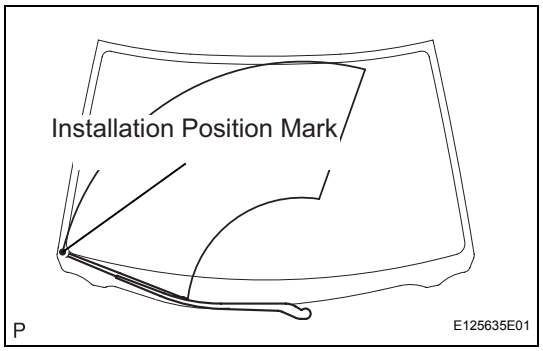

(d) Install the FR wiper arm & blade assembly RH with the nut at the position as shown in the illustration.
Torque: 20 N*m (209 kgf*cm, 15 ft.*lbf)
HINT:
Hold the arm hinge by hand to fasten the nut.

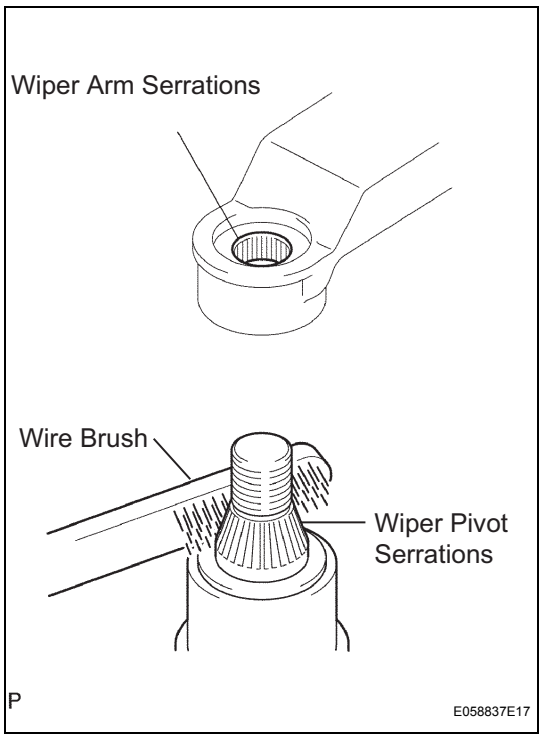

4. INSTALL WINDSHIELD WIPER ARM AND BLADE ASSEMBLY LH

(a) Clean the wiper arm serrations.
(b) Clean the wiper pivot serrations with a wire brush (when reinstalling).

WW

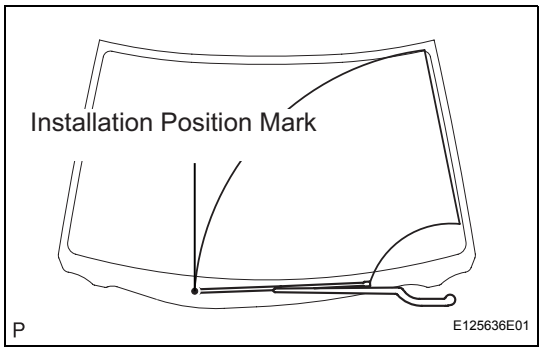

(c) Install the FR wiper arm & blade assembly LH with the nut at the position shown in the illustration.
Torque: 20 N*m (209 kgf*cm, 15 ft.*lbf)
HINT:
Hold the arm hinge by hand to fasten the nut.

FRONT WIPER RUBBER

COMPONENTS

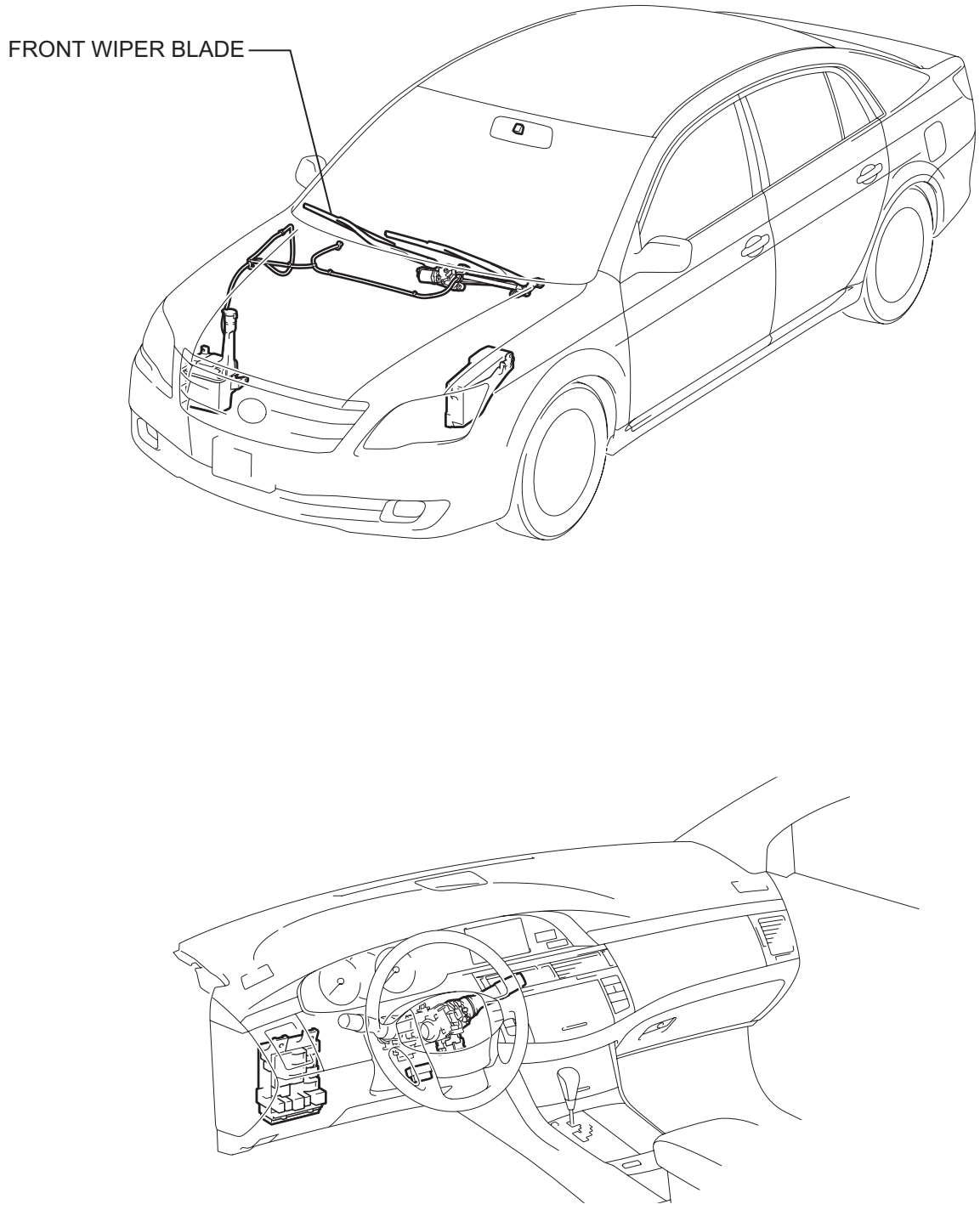

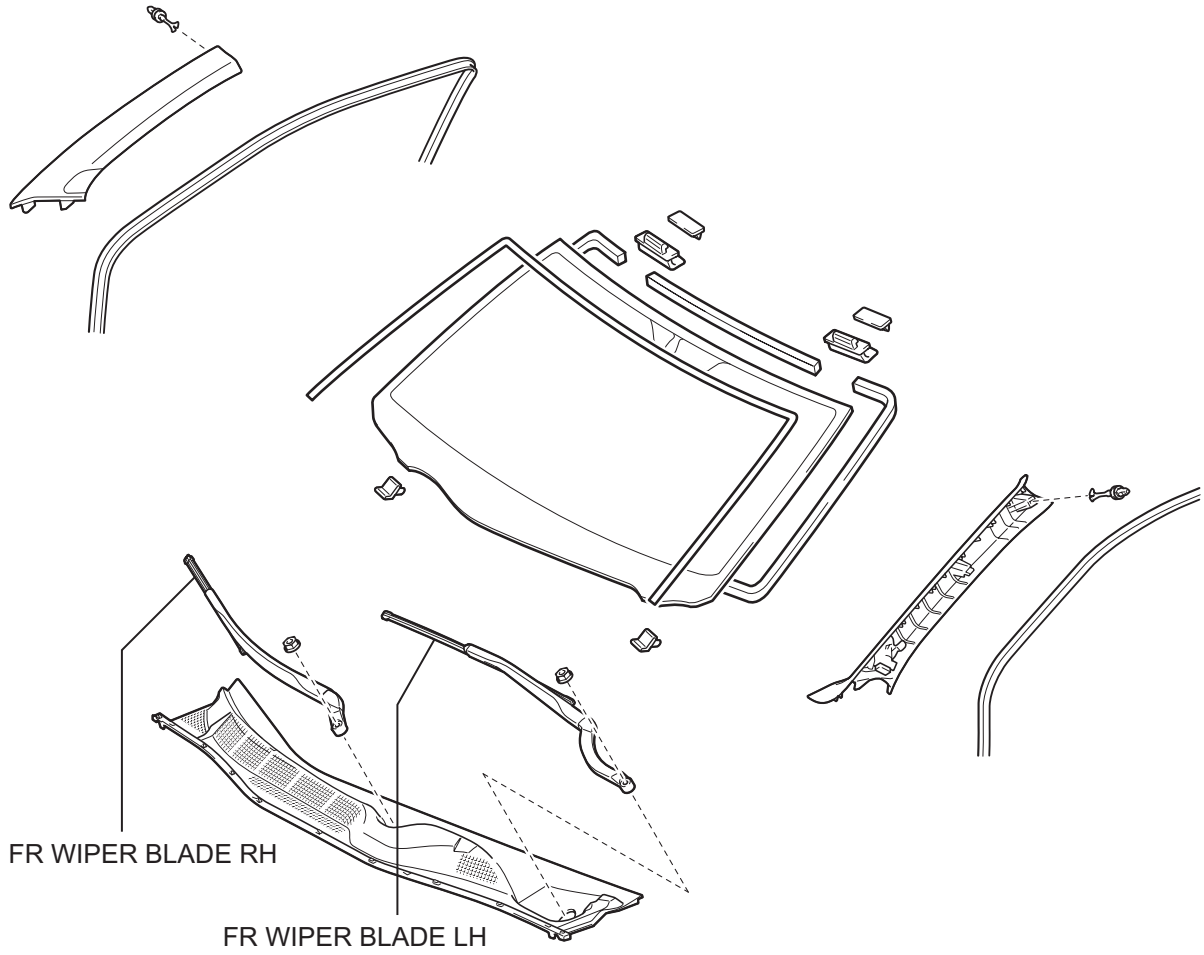

P

B115002E02

REMOVAL

HINT:

- Use the same procedures for the RH side and LH side.
- The procedures listed below are for the LH side.
- Installation is in the reverse order of removal.

1. REMOVE WINDSHIELD WIPER ARM AND BLADE ASSEMBLY LH (See page WW-38)

2. REMOVE FR WIPER BLADE LH

(a) Remove the FR wiper blade LH as shown in the illustration.

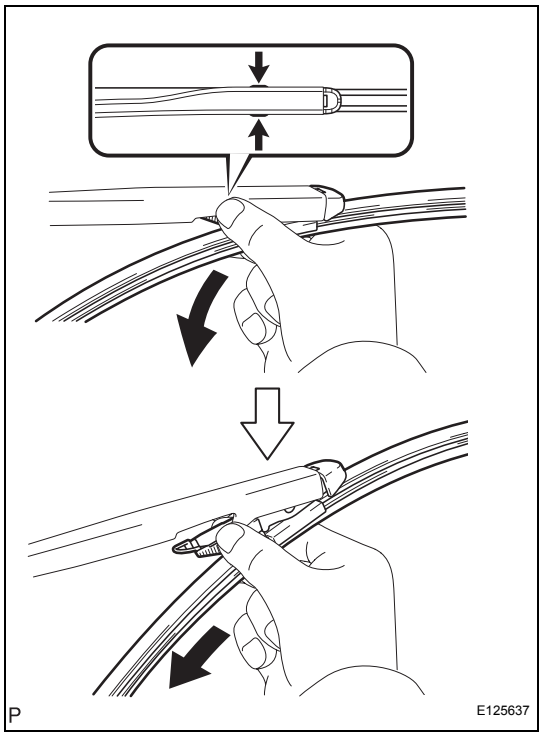

INSTALLATION

1. **INSTALL WINDSHIELD WIPER ARM AND BLADE ASSEMBLY LH (See page WW-41)**

WIPER SWITCH

COMPONENTS

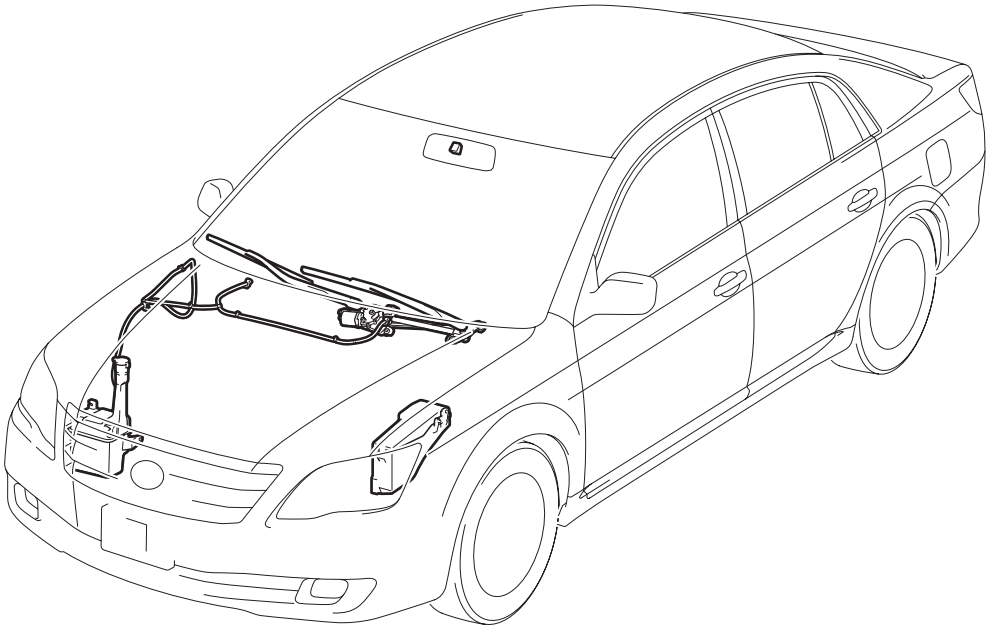

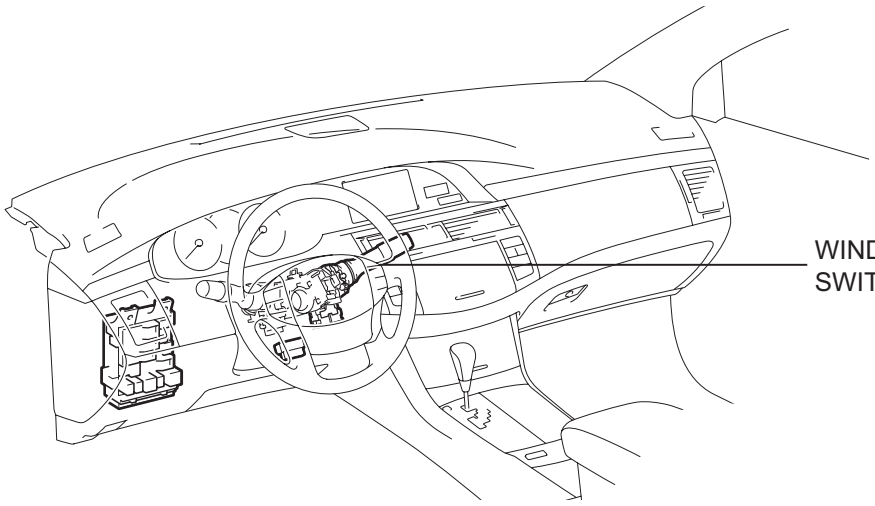

P

E112680E03

WW

REMOVAL

1. **PRECAUTION**
   (RS-1)
2. **DISCONNECT BATTERY NEGATIVE TERMINAL**
3. **PLACE FRONT WHEELS FACING STRAIGHT AHEAD**
4. **REMOVE STEERING WHEEL COVER LOWER NO.3 (See page RS-304)**
5. **REMOVE STEERING WHEEL COVER LOWER NO.2 (See page RS-304)**
6. **REMOVE HORN BUTTON ASSEMBLY (See page RS-304)**
7. **REMOVE STEERING WHEEL ASSEMBLY (See page SR-36)**
8. **REMOVE STEERING COLUMN COVER LWR (See page SR-36)**
9. **REMOVE STEERING COLUMN COVER (See page SR-36)**
10. **REMOVE WINDSHIELD WIPER SWITCH ASSEMBLY**
    (a) Disconnect the connector.
    (b) Disengage the claw, and remove the windshield wiper switch assembly.
    NOTICE:
    If the claw is pushed with excessive force, it may be broken.

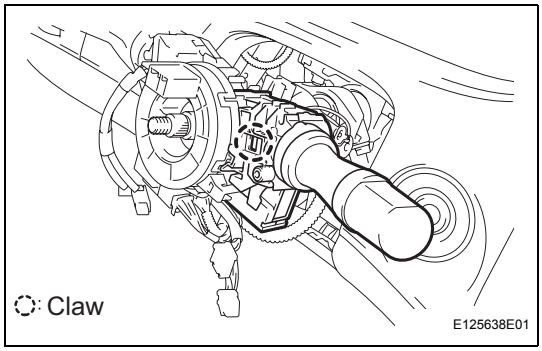

INSTALLATION

1. **INSTALL STEERING COLUMN COVER (See page SR-46)**
2. **INSTALL STEERING COLUMN COVER LWR (See page SR-46)**
3. **INSTALL STEERING WHEEL ASSEMBLY (See page SR-46)**
4. **INSPECT STEERING WHEEL CENTER POINT (See page SR-47)**
5. **INSTALL HORN BUTTON ASSEMBLY (See page RS-305)**
6. **INSTALL STEERING WHEEL COVER LOWER NO.2 (See page RS-305)**
7. **REMOVE STEERING WHEEL COVER LOWER NO.3 (See page RS-305)**
8. **CONNECT BATTERY NEGATIVE TERMINAL**
9. **INSPECT HORN BUTTON ASSEMBLY**
10. **PERFORM INITIALIZATION** (IN-29)
11. **INSPECT SRS WARNING LIGHT** (RS-28)

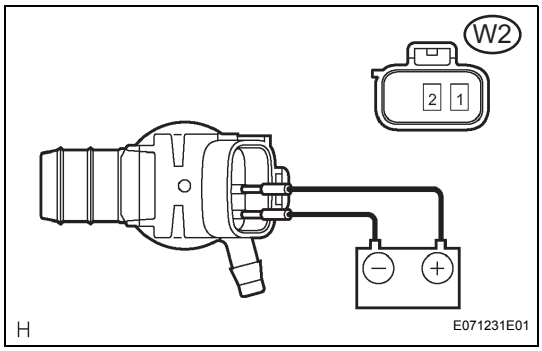

FRONT WASHER MOTOR

ON-VEHICLE INSPECTION

1. INSPECT WINDSHIELD WASHER MOTOR AND PUMP ASSEMBLY

(a) Operation Check

(1) Fill the washer jar with washer fluid.

(2) Connect the positive battery (+) lead to terminal 2 of the windshield washer motor and pump assembly, and the negative battery (-) lead to terminal 1.

(3) Check that washer fluid flows from the washer jar.

WASHER NOZZLE

INSPECTION

1. REMOVE WASHER NOZZLE SUB-ASSEMBLY

(a) With the engine running, check the position the washer fluid hits the windshield.

Standard:

Washer fluid hits the windshield in the areas shown in the illustration.

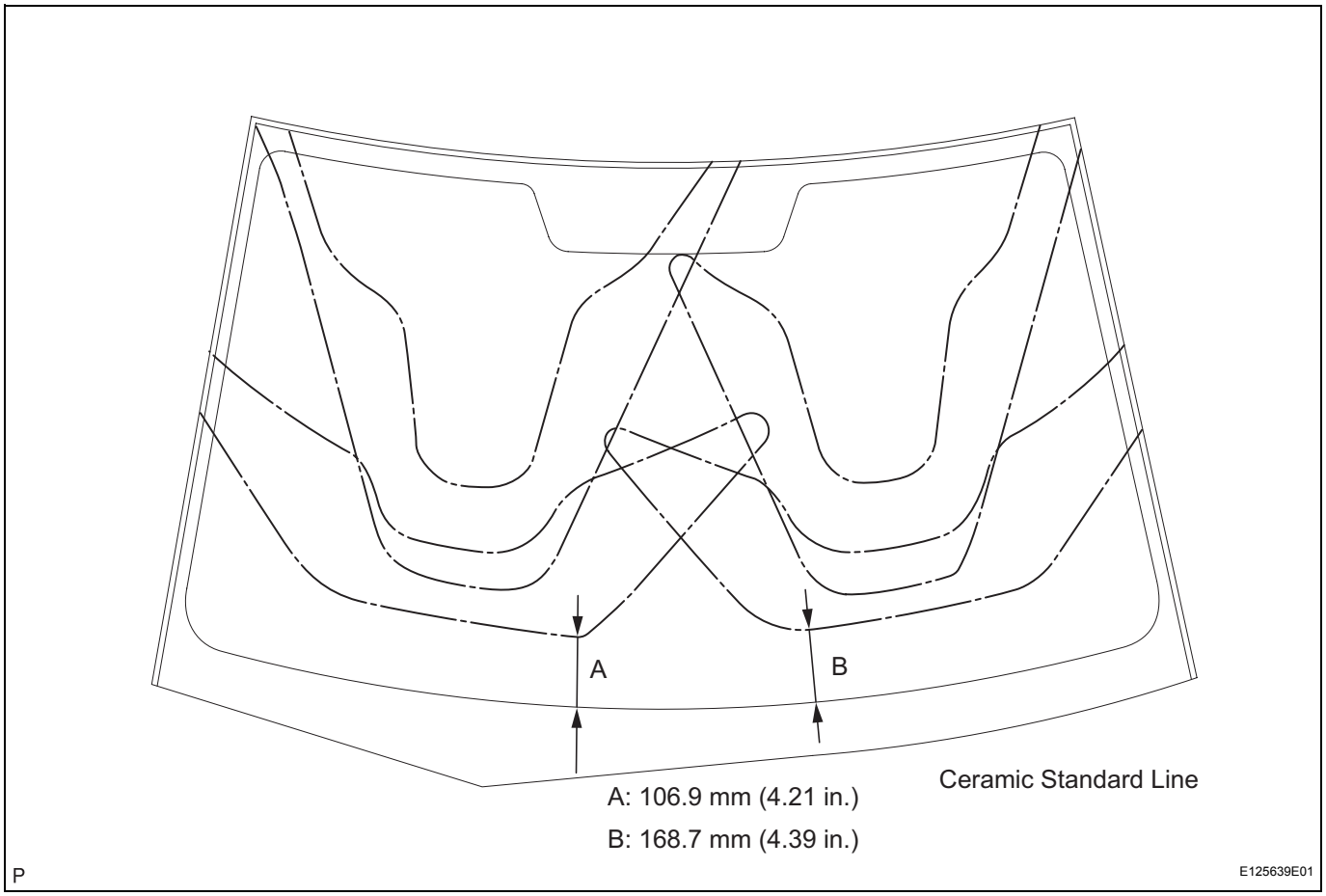

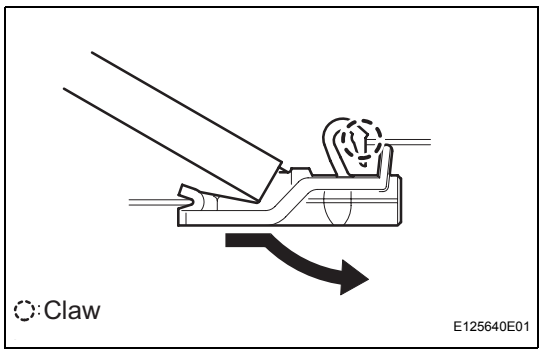

ADJUSTMENT

1. ADJUST WASHER NOZZLE SUB-ASSEMBLY

(a) Using a screwdriver, separate the washer nozzle as shown in the illustration.

NOTICE:

Be careful not to damage the glass.

(b) Select a washer nozzle so that the contact area is within the standard. Replace the nozzle with the selected one.

Available washer nozzles:

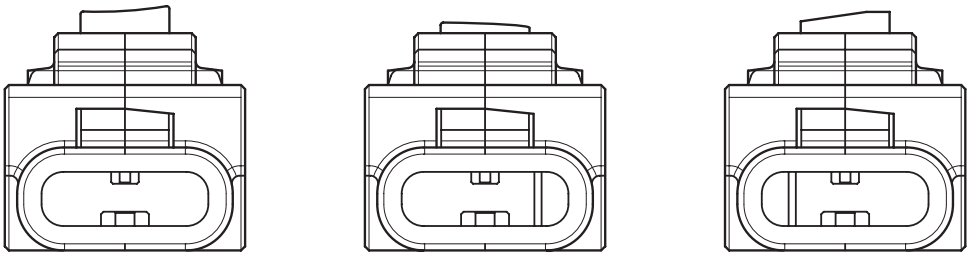

Washer fluid spray angle	0°	+1°	-1°
Part number	85380-AC010	85380-AC020	85380-AC030

P

E125641E01

RAIN SENSOR

COMPONENTS

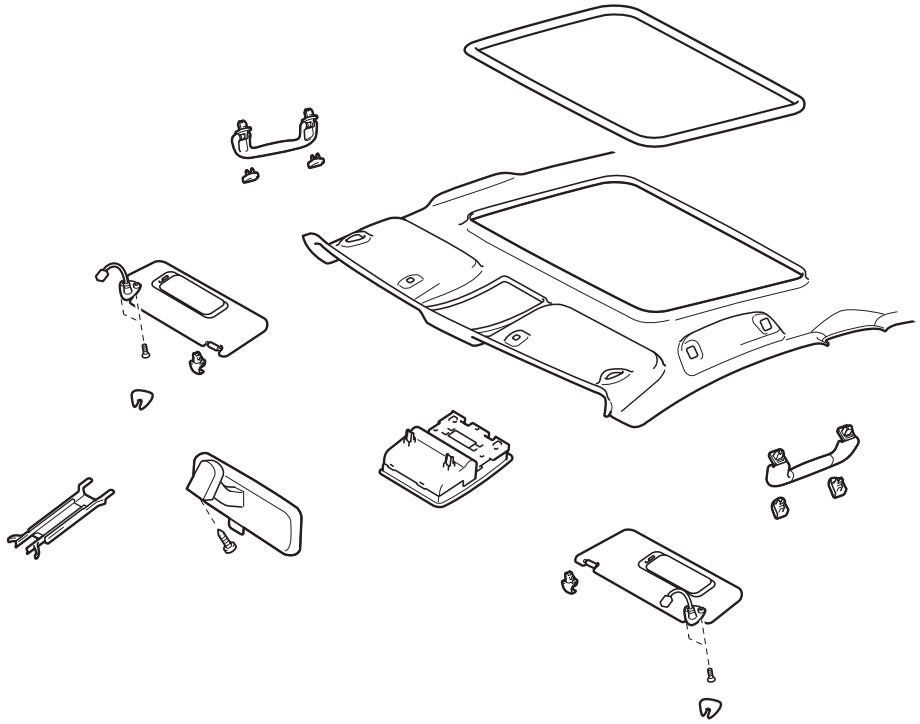

RAIN SENSOR

RAIN SENSOR COVER

P

B115053E01

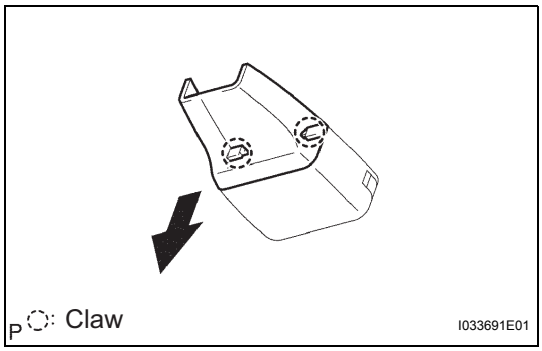

REMOVAL

1. REMOVE RAIN SENSOR COVER

(a) Release the 2 claws and remove the rain sensor cover.

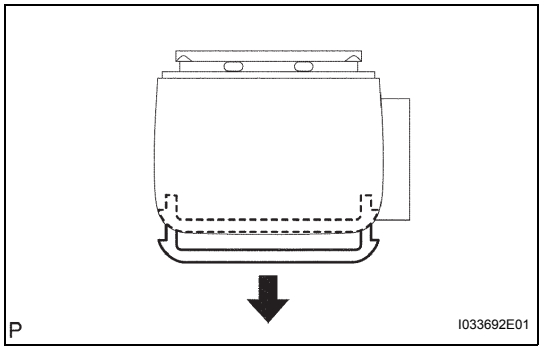

2. REMOVE RAIN SENSOR

(a) Pull out the stopper as shown in the illustration, and release the lock.

(b) Disconnect the connector and remove the rain sensor.

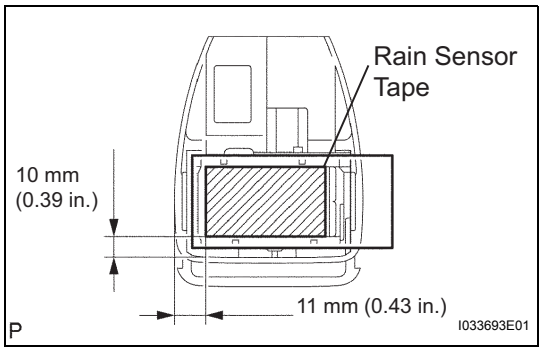

INSTALLATION

1. INSTALL RAIN SENSOR TAPE

(a) Peel off the releasing sheet (yellow side) and attach the rain sensor tape to the position indicated in the illustration (the sensor part of the rain sensor) while pushing out air bubbles with your fingers.

(b) Peel off the releasing sheet (white side).

NOTICE:

- **When reusing the rain sensor, clean dirt off the sensor part with a cloth, etc.**
- **Do not touch the adhesive surface directly with your fingers.**

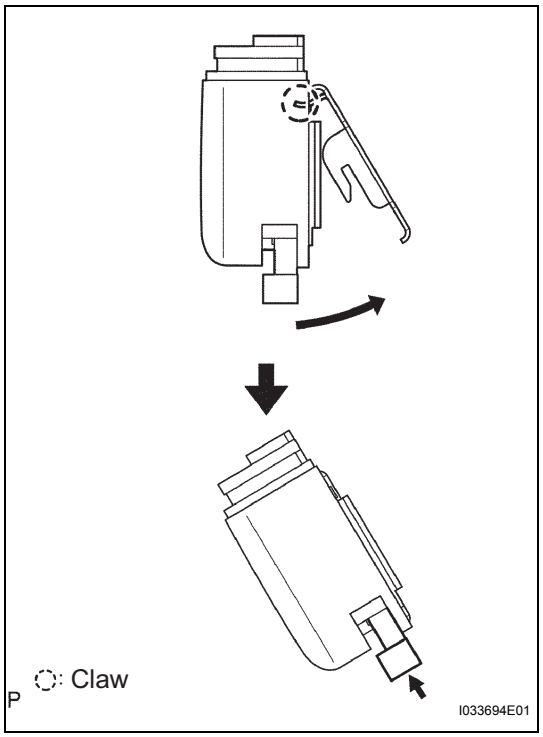

2. INSTALL RAIN SENSOR

(a) Engage the claw as shown in the illustration to set the position.

(b) Gradually attach the rain sensor to the glass surface to prevent air bubbles in between.

(c) Push in the stopper.

NOTICE:

- **Check that the rain sensor tape does not remain on the wind shield glass. If it does, remove it before installing the rain sensor.**
- **Do not touch the adhesive surface and the glass surface directly with your fingers.**
- **Clean dirt on the glass with a cloth, etc.**
- **The rain sensor tape can be reused, however, replace it with a new one if it has dirt on or is damaged.**
- **After installing the rain sensor, air bubbles should not exist between the windshield glass and the rain sensor tape.**